N00639.AR.002345
NSA MID SOUTH
5090.3a

FINAL TIER II SAMPLING AND ANALYSIS PLAN ADDENDUM SOLID WASTE MANAGEMENT UNIT (SWMU) 39 SUB-SLAB GROUNWATER SAMPLING MILLINGTON SUPPACT TN
05/01/2013
RESOLUTION CONSULTANTS

FINAL
TIER II SAMPLING AND ANALYSIS PLAN ADDENDUM

SWMU 39 SUB-SLAB GROUNDWATER SAMPLING
NAVAL SUPPORT ACTIVITY MID-SOUTH
MILLINGTON, TENNESSEE

Version Number: 0

Prepared For:

Department of the Navy
Naval Facilities Engineering Command Midwest
201 Decatur Avenue, Building IA
Great Lakes, Illinois 60088

Prepared By:

Resolution Consultants
A Joint Venture of AECOM & EnSafe
1500 Wells Fargo Building
440 Monticello Avenue
Norfolk, Virginia 23510

Contract Number: N62470-11-D-8013
CTO F278

May 2013

SAP WORKSHEET #1: TITLE AND APPROVAL PAGE

(UFP-QAPP Manual Section 2.1)

for

TIER II SAMPLING AND ANALYSIS PLAN ADDENDUM
SWMU 39 SUB-SLAB GROUNDWATER SAMPLING
NAVAL SUPPORT ACTIVITY MID-SOUTH
MILLINGTON, TENNESSEE

Version Number: 0

Prepared For:

Department of the Navy
Naval Facilities Engineering Command Midwest
201 Decatur Avenue, Building IA
Great Lakes, Illinois 60088

Prepared By:

Resolution Consultants
A Joint Venture of AECOM & EnSafe
1500 Wells Fargo Building
440 Monticello Avenue
Norfolk, Virginia 23510

Contract Number: N62470-11-D-8013
CTO F278

March 2013

Cantwell.Tina Digitally signed by Cantwell.Tina
DN: cn=Cantwell.Tina, o=EnSafe Inc., ou, email=tcantwell@ensafe.com, c=US
Date: 2013.04.30 11:13:24 -05'00'

Tina Cantwell, Resolution Consultants
Project Chemist/QA Officer/Date

Brantley.Benjamin.J.ORC1000035709.ID Digitally signed by Brantley.Benjamin.J.ORC1000035709.ID
DN: c=US, o=U.S. Government, ou=ECA, ou=ORC, ou=Ensafe, cn=Brantley.Benjamin.J.ORC1000035709.ID
Date: 2013.04.30 11:21:07 -05'00'

Ben Brantley, Resolution Consultants
Task Order Manager/Date

NAVFAC Atlantic
Quality Assurance Officer/Chemist/Date

SIMES.BENJAMIN.W.1380347853 Digitally signed by SIMES.BENJAMIN.W.1380347853
DN: c=US, o=U.S. Government, ou=DoD, ou=PKI, ou=USN, cn=SIMES.BENJAMIN.W.1380347853
Date: 2013.05.13 10:43:56 -05'00'

Ben Simes, NAVFAC Midwest
Remedial Project Manager/Date

EXECUTIVE SUMMARY

Resolution Consultants has prepared this sampling and analysis plan (SAP) Addendum to address potential shallow groundwater impacts associated with water that infiltrated the Solid Waste Management Unit (SWMU) 39 excavation during the Building S-74 slab and sub-slab soil removal activities conducted in the summer of 2012. The removal excavation encountered the side wall of an underground storage tank pit, resulting in the pea-gravel backfill and trapped water sloughing off into the excavation. Low concentrations of perchloroethylene (PCE; 6 micro grams per liter [µg/L]) were detected in the backfill water; however, the excavation was backfilled with soil.

The objective of this SAP Addendum is to evaluate whether the perched groundwater is horizontally continuous beneath the sub-slab close to SWMU 39 and if so, determine whether it is impacted with chlorinated solvents. The information provided in the SAP Addendum worksheets is based on the SWMU 39 soil removal action data presented by Lee and Ryan at the February 2013 Base Cleanup Team (BCT) meeting. Only those worksheets that are relevant to the perched groundwater evaluation that are specific to tasks not included in *the UFP Quality Assurance Project Plan — Remediation of SWMU 39 TCE Plume* (Lee and Ryan, March 2012) are included in this addendum. The original SAP (Lee and Ryan, March 2012) is provided in Appendix A for reference. The worksheets specifically included in this Addendum are the following:

Worksheet #1	Title and Approval Page
Worksheet #2	Sampling and Analysis Plan Identifying Information
Worksheet #3	Distribution List
Worksheet #5	Project Organizational Chart
Worksheet #6	Communication Pathways
Worksheet #7	Personnel Responsibilities Table
Worksheet #9	Project Planning Session Participants Sheet
Worksheet #11	Data Quality Objectives/Systematic Planning Process
Worksheet #12	Field Quality Control Samples
Worksheet #14	Field Project Tasks
Worksheet #15	Reference Limits and Evaluation Table
Worksheet #17	Sampling Design and Rationale
Worksheets#18, 19, 20, & 30	Location Specific Sampling Methods/SOP Requirements Table
Worksheet #21	Project Sampling SOP References Table
Worksheet #22	Field Equipment Calibration, Maintenance, Testing and Inspection Table
Worksheet #23	Analytical SOP Reference Table
Worksheet #28	Laboratory QC Samples Table
Worksheet #34-36	Data Verification and Validation

Table of Contents

SAP WORKSHEET #1: TITLE AND APPROVAL PAGE ..... WS 1 CP-2

SAP WORKSHEET #2: SAMPLING AND ANALYSIS PLAN IDENTIFYING INFORMATION ..... WS 2-1

SAP WORKSHEET #3: DISTRIBUTION LIST ..... WS 3-1

SAP WORKSHEET #5: PROJECT ORGANIZATIONAL CHART ..... WS 5-1

SAP WORKSHEET #6: COMMUNICATION PATHWAYS ..... WS 6-1

SAP WORKSHEET #7: PERSONNEL RESPONSIBILITIES TABLE ..... WS 7-1

SAP WORKSHEET #9: PROJECT PLANNING SESSION PARTICIPANTS SHEET ..... WS 9-1

SAP WORKSHEET #10: CONCEPTUAL SITE MODEL ..... WS 10-1

SAP WORKSHEET #11: DATA QUALITY OBJECTIVES/SYSTEMATIC PLANNING PROCESS ... WS 11-1

SAP WORKSHEET #12: FIELD QUALITY CONTROL SAMPLES ..... WS 12-1

SAP WORKSHEET #14: FIELD PROJECT TASKS ..... WS 14-1

SAP WORKSHEET #15: REFERENCE LIMITS AND EVALUATION TABLE ..... WS 15-1

SAP WORKSHEET #17: SAMPLING DESIGN AND RATIONALE ..... WS 17-1

SAP WORKSHEETS #18, 19, 20, and 30: LOCATION-SPECIFIC SAMPLING METHODS/SOP REQUIREMENTS TABLE ..... WS 18, 19, 20, & 30-1

SAP WORKSHEET #21: PROJECT SAMPLING SOP REFERENCES TABLE ..... WS 21-1

SAP WORKSHEET #22: FIELD EQUIPMENT CALIBRATION, MAINTENANCE, TESTING, AND INSPECTION TABLE ..... WS 22-1

SAP WORKSHEET #23: ANALYTICAL SOP REFERENCES TABLE ..... WS 23-1

SAP WORKSHEET #28: LABORATORY QC SAMPLES TABLE ..... WS 28-1

SAP WORKSHEETS #34 — 36: DATA VERIFICATION AND VALIDATION (STEPS I AND IIA/IIB) PROCESS TABLE ..... WS 34 — 36-1

Figures

Figure 11-1 Proposed Temporary Monitoring Wells ..... WS 11-3

Tables

Table 1 UFP Tier II SAP Crosswalk ..... WS 2-2

Appendices

Appendix A Lee and Ryan Sampling and Analysis Plan
Appendix B Field Forms
Appendix C Standard Operating Procedures
Appendix D Laboratory Accreditation Certificate

List of Acronyms

BCT	Base Cleanup Team
bgs	Below Ground Surface
C	Celsius
CAS	Chemical Abstracts Service
CLEAN	Comprehensive Long-Term Environmental Action Navy
COPC	Contaminant of Potential Concern
CTO	Contract Task Order
DL	Detection Limit
DoD	Department of Defense
DPT	Direct Push Technology
DQO	Data Quality Objective
DSWM	Division of Solid Waste Management
ELAP	Environmental Laboratory Accreditation Program
FTL	Field Team Leader
GC/MS	Gas Chromatograph/Mass Spectrometer
HCL	Hydrochloric Acid
HSM	Health and Safety Manager
ICAL	Initial Calibration
ID	Identification
IR	Installation Restoration
LCS	Laboratory Control Sample
LCSD	Laboratory Control Sample Duplicate
LOD	Limit of Detection
LOQ	Limit of Quantification
MCL	Maximum Contaminant Level
mg/L	Milligrams per liter
mL	milliliter
MS/MSD	Matrix Spike/Matrix Spike Duplicate
mV	Millivolt
NA	Not Applicable
NAVFAC	Naval Facilities Engineering Command
NAVFAC Midwest	Naval Facilities Engineering Command Midwest Division
NIRIS	Naval Installation Restoration Information Solution
NSA	Naval Support Activity

%	Percent
%R	Percent Recovery
PAL	Project Action Level
PDF	Portable document format
PM	Project Manager
PVC	Polyvinyl chloride
QA	Quality Assurance
QAO	Quality Assurance Officer
QAPP	Quality Assurance Project Plan
QC	Quality Control
QSM	Quality Systems Manual
RCRA	Resource Conservation and Recovery Act
RFI	Resource Conservation and Recovery Act Facility Investigation
RPD	Relative Percent Difference
RPM	Remedial Project Manager
RSL	Regional Screening Level
SAP	Sampling and Analysis Plan
SOP	Standard Operating Procedure
SSO	Site Safety Officer
SWAP	Safe Work Assessment Permit
SWMU	Solid Waste Management Unit
TBD	To Be Determined
TDEC	Tennessee Department of Environment and Conservation
TOM	Task Order Manager
UFP	Uniform Federal Policy
USEPA	United States Environmental Protection Agency
USGS	United States Geological Survey
VOC	Volatile Organic Compound

SAP WORKSHEET #2: SAMPLING AND ANALYSIS PLAN IDENTIFYING INFORMATION

(UFP-QAPP Manual Section 2.2.4)

Site Name/Number: SWMU 39 Sub-Slab Groundwater Sampling
NSA Mid-South; Millington, Tennessee

Operable Unit: Not Applicable (NA)

Contractor Name: Resolution Consultants

Contract Number: N62470-11-D-8013

Contract Title: Comprehensive Long-Term Environmental Action (CLEAN)

Work Assignment No.: Contract Task Order (CTO) F278

1. This Sampling and Analysis Plan (SAP) was prepared in accordance with the requirements of: *Uniform Federal Policy for Quality Assurance Plans (UFP-QAPP)* (USEPA, 2005), U.S. Environmental Protection Agency (USEPA) *Guidance for Quality Assurance Project Plans, EPA QA/G-5* (USEPA, 2002), and *Guidance on Systematic Planning Using the Data Quality Objective Process* (USEPA, 2006).

2. Identify regulatory program: Resource Conservation and Recovery Act (RCRA)

3. This SAP is a project specific SAP.

4. List organizational partners (stakeholders) and connection with lead organizations:

Organization Partners/Stakeholders	Connection
TDEC Division of Solid Waste Management (TDEC DSWM)	Lead Regulatory Oversight
Naval Facilities Engineering Command Midwest (NAVFAC Midwest)	Lead Agency
NSA Mid-South	Property Owner
United States Geological Survey	Base Clean-up Team Partner
Resolution Consultants	Base Clean-up Team Partner

5. Lead Agency: NAVFAC Midwest

6. If any required SAP elements and required information are not applicable to the project or are provided elsewhere, then note the omitted SAP elements and provide an explanation for their exclusion below: Refer to the Table 1 Crosswalk for omitted worksheets and the rationale for the exclusion.

Since this is a graded Tier II SAP, the following worksheets have been omitted: #s 7, 8, 13, 24, 25, 26, 27, 29, 31, 32, 33, and 37. Though these specific worksheets have been omitted, the Tier I worksheet elements have been addressed either within other worksheets or the USP-SAP crosswalk format, found in Table 1.

Table 1
UFP Tier II SAP Crosswalk

UFP SAP Worksheet #	Required Information	Crosswalk to Related Information
A. Project Management and Objectives		
Documentation		
1	Title and Approval Page	SAP Worksheet 1
2	SAP Identifying Information	SAP Worksheet 2
3	Distribution List	SAP Worksheet 3
4	Project Personnel Sign-Off Sheet	Worksheet not provided; field personnel will be required to review SAP prior to activities. Empirical Laboratory will provide an email acknowledgement of receipt.
Project Organization		
5	Project Organizational Chart	SAP Worksheet 5
6	Communication Pathways	SAP Worksheet 6
7	Personnel Responsibilities Table	SAP Worksheet 7
8	Special Personnel Training Requirements Table	Worksheet not provided; no specialized or non-route training is anticipated. Field personnel will adhere to the project standard operating procedures (SOPs).
Project Planning/Problem Definition		
9	Project Scoping Session Participants Sheet	SAP Worksheet 9
10	Conceptual Site Model	Worksheet provided in the attached *QAPP — Remediation of SWMU 39 TCE Plume* (Lee and Ryan, March 2012).
11	Project Quality Objectives/Systematic Planning Process Statements	SAP Worksheet 11
12	Field Quality Control Samples	SAP Worksheet 12
13	Secondary Data Criteria and Limitations Table	Worksheet not provided; the only relevant secondary data is described in the Project Planning Worksheet #9 and illustrated on Figure 11-1.

Table 1 UFP Tier II SAP Crosswalk		
UFP SAP Worksheet #	**Required Information**	**Crosswalk to Related Information**
14	Summary of Project Tasks	SAP Worksheet 14
15	Reference Limits and Evaluation Tables	SAP Worksheet 15
16	Project Schedule/Timeline Table	Worksheet not provided; project will start within two weeks after regulatory approval of SAP Addendum.
B. Measurement/Data Acquisition		
Sampling Tasks		
17	Sampling Design and Rationale	SAP Worksheet 17
18	Location-Specific Sampling Methods/SOP Requirements Table	Combined SAP Worksheets 18, 19, 20, and 30
19	Field Sampling Requirements Table	Combined SAP Worksheets 18, 19, 20, and 30
20	Field quality control (QC) Sample Summary Table	Combined SAP Worksheets 18, 19, 20, and 30
21	Project Sampling SOP References Table	SAP Worksheet 21
22	Field Equipment Calibration, Maintenance, Testing, and Inspection Table	SAP Worksheet 22
Analytical Tasks		
23	Analytical SOP References Table	SAP Worksheet 23; laboratory SOPs will be provided upon request
24	Analytical Instrument Calibration Table	Worksheet not provided; laboratory will follow the procedures specified in the *Department of Defense Quality Systems Manual*, Version 4.2 (and subsequent versions) and their SOPs.
25	Analytical Instrument and Equipment Maintenance, Testing, and Inspection Table	Worksheet not provided; laboratory will follow the procedures specified in the *Department of Defense Quality Systems Manual*, Version 4.2 (and subsequent versions) and their SOPs.
Sample Collection		
26	Sample Handling System	Worksheet not provided; Resolution Consultants personnel will be responsible for sample collection and shipment and Empirical Laboratory will be responsible for sample receipt and analysis, sample archiving, and disposal.
27	Sample Custody Requirements	Worksheet not provided; sample identification will follow the existing long-term monitoring scheme. Custody procedures may be found in field Resolution Consultants SOP 3-03 *Sample Labeling and Chain-of-Custody Procedures*, provided in Appendix B.

Table 1
UFP Tier II SAP Crosswalk

UFP SAP Worksheet #	Required Information	Crosswalk to Related Information
Quality Control Samples		
28	Laboratory QC Samples Table	SAP Worksheet 28
Data Management Tasks		
29	Project Documents and Records Table	Worksheet not provided; all final documents and records will be uploaded to the Naval Installation Restoration Information Solution database.
30	Analytical Services Table	Combined SAP Worksheets 18, 19, 20, and 30
C. Assessment Oversight		
31	Planned Project Assessments Table	Worksheet not provided; external laboratory systems audits will be conducted every two years by the Department of Defense Environmental Laboratory Accreditation Program.
32	Assessment Findings and Corrective Action Responses Table	Worksheet not provided; Empirical Laboratory will be responsible for addressing external laboratory systems audits.
33	QA Management Reports Table	Worksheet not provided; project QA manager and field personnel will notify the project manager when significant plan deviations result from unanticipated circumstances.
D. Data Review		
34-36	Data Verification and Validation (Steps I and IIa/IIb) Process Table	Combined SAP Worksheets 34, 35, and 36

Notes:
UFP = Uniform Federal Policy
SAP = sample and analysis plan
QA = quality assurance
QC = quality control
LTM = long term monitoring
SOP = standard operating procedure

SAP WORKSHEET #3: DISTRIBUTION LIST

(UFP-QAPP Manual Section 2.3.2)

Distribution List				
SAP Recipients	**Title**	**Organization**	**Telephone Number**	**E-mail Address or Mailing Address**
Ben Simes	Naval Remedial Project Manager (RPM)	NAVFAC Midwest	847-688-2600 x 320	benjamin.simes@navy.mil
Jim Heide	Head of Public Works/Environmental	NSA Mid-South	901-874-5367	jim.heide@navy.mil
Roger Donovan	TDEC DSWM Project Manager	TDEC — DSWM	615-532-0864	roger.donovan@tn.gov
Charlie Burroughs	TDEC DSWM Division Head	TDEC — DSWM	615-532-0863	charles.burroughs@tn.gov
Ben Brantley	Task Order Manager (TOM)	Resolution Consultants	901-372-7962	bbrantley@ensafe.com
Tina Cantwell	Project Chemist/Data Validation Manager/Quality Assurance Officer (QAO)	Resolution Consultants	901-372-7962	tcantwell@ensafe.com
Kate Freeman	Field Team Leader (FTL)/Site Safety Officer	Resolution Consultants	901-372-7962	ccoleman@ensafe.com
Sonya Gordon	Laboratory Project Manager	Empirical Laboratories, LLC	615-345-1115	sgordon@empirlabs.com

Notes:
Each person listed in this table will be responsible for distributing copies of this SAP to appropriate personnel within their organization.
NAVFAC Midwest = Department of the Navy, Naval Facilities Engineering Command, Midwest
NSA = Naval Support Activity
TDEC DSWM = Tennessee Department of Environment and Conservation Division of Solid Waste Management

SAP WORKSHEET #5: PROJECT ORGANIZATIONAL CHART

(UFP-QAPP Manual Section 2.4.1)

Lines of Authority ———— Lines of Communication - - - - - - - -

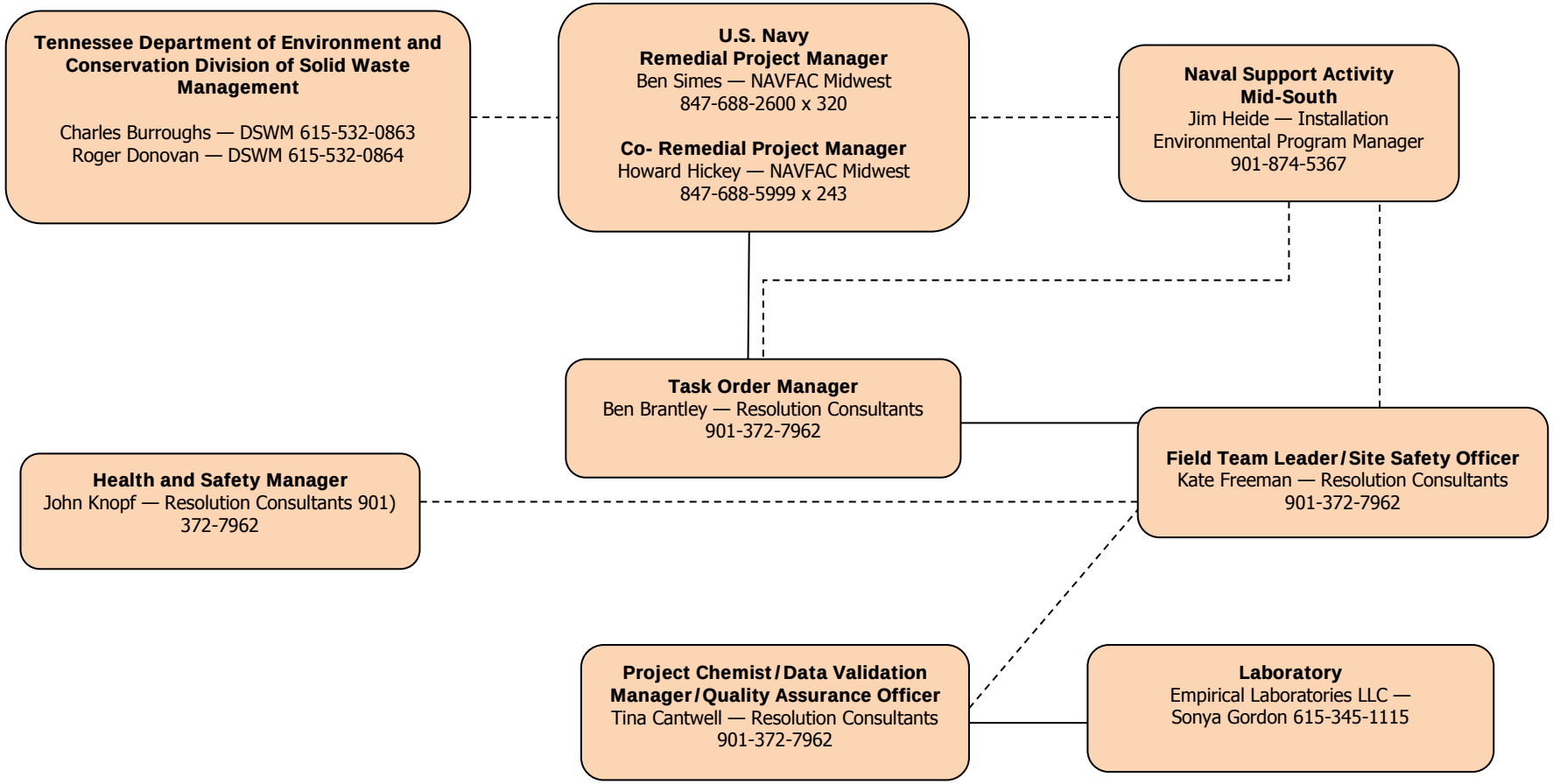

SAP WORKSHEET #6: COMMUNICATION PATHWAYS

(UFP-QAPP Manual Section 2.4.2)

The communication pathways for the SAP are shown below.

Communication Pathways				
Communication Drivers	**Responsible Entity**	**Name**	**Phone Number**	**Procedure (Timing, Pathway To/From, etc.)**
Regulatory Agency Interface	Navy RPM Navy Co-RPM	Ben Simes Howard Hickey	847-688-2600 x 320 847-688-5999 x 243	The Navy RPM informs regulatory agency of work progress on a periodic basis.
Progress Reports	Resolution Consultants FTL Resolution Consultants TOM Navy RPM	Kate Freeman Ben Brantley Ben Simes	901-372-7962 901-372-7962 847-688-2600 x 320	FTL verbally informs the TOM on a daily basis — field updates. TOM provides a weekly update to the RPM either by phone message and/or e-mail each Friday afternoon field activities are taking place.
Gaining Site Access	Resolution Consultants FTL Installation Environmental Program Manager	Kate Freeman Jim Heide	901-372-7962 901-874-5367	Follow instructions provided on Standard Operating Procedure SOP-MS Access, provided in Appendix C. For visitors' passes, Form 5530 must be submitted 14 days prior to arrival for approval.
Obtaining Utility Clearances for Intrusive Activities	Resolution Consultants FTL NSA Mid-South Acting IR Site Manager	Kate Freeman Debbie Zanot	901-372-7962 901-874-5317	The Resolution Consultants FTL will coordinate verbally or via e-mail with NSA Mid-South point of contact at least 14 days in advance of site access to initiate the utility clearance process for all intrusive sampling locations.
Stop Work due to Safety Issues	Resolution Consultants FTL/SSO Resolution Consultants TOM Resolution Consultants HSM NSA Mid-South Acting IR Site Manager	Kate Freeman Ben Brantley John Knopf Debbie Zanot	901-372-7962 901-372-7962 901-372-7962 901-874-5317	If Resolution Consultants is the responsible party for a stop work command, the Resolution Consultants SSO will inform onsite personnel, subcontractor(s), the NSA Mid-South Head of Public Works, and the TOM within 1 hour of recommendation to stop work (verbally or by email). If a subcontractor is the responsible party, the subcontractor PM must verbally inform the Resolution Consultants SSO within 15 minutes and the Resolution Consultants SSO will then follow the procedure listed above.
SAP Changes before Field/Laboratory work	Resolution Consultants TOM Navy RPM	Ben Brantley Ben Simes	901-372-7962 847-688-2600 x 320	Any change of the approved SAP will be made only upon authorization of the Navy RPM and regulatory agencies. The Resolution Consultants TOM is responsible for initiating any SAP change requests via the communication channels described for the Navy and regulatory agencies.

Communication Pathways				
Communication Drivers	**Responsible Entity**	**Name**	**Phone Number**	**Procedure (Timing, Pathway To/From, etc.)**
SAP Changes in the Field	Resolution Consultants FTL/SSO Resolution Consultants TOM Navy RPM	Kate Freeman Ben Brantley Ben Simes	901-372-7962 901-372-7962 847-688-2600 x 320	FTL informs TOM verbally within same day; TOM informs Navy RPM via e-mail within 24 hours; TOM sends a concurrence letter to RPM, if warranted, within 7 calendar days and RPM signs the letter within 5 business days of receipt. Scope change is to be implemented before work is executed. Document the change on a field task modification request form (within 2 business days) or SAP amendment (within timeframe agreed to by Project Team).
Field Corrective Actions	Resolution Consultants FTL/SSO Resolution Consultants TOM Navy RPM	Kate Freeman Ben Brantley Ben Simes	901-372-7962 901-372-7962 847-688-2600 x 320	FTL informs TOM verbally within same day; TOM informs Navy RPM via e-mail within 24 hours that corrective actions have been implemented. Corrective actions will be documented in weekly progress reports. Navy RPM will notify TDEC of any significant corrective actions taken.
Recommendations to stop work and initiate work upon corrective action	Resolution Consultants FTL/SSO Resolution Consultants TOM Resolution Consultants QAO Navy RPM	Kate Freeman Ben Brantley Tina Cantwell Ben Simes	901-372-7962 901-372-7962 901-372-7962 847-688-2600 x 320	Responsible party verbally informs the TOM, FTL, and subcontractors within 1 hour of recommendation to stop work and within 24 hours of recommendation to restart work. Responsible party follows verbal notification with an e-mail to the Project Team within 24 hours.
Sample Receipt and Laboratory Quality Variances	Empirical Laboratories PM Resolution Consultants FTL Resolution Consultants TOM	Sonya Gordon Kate Freeman Ben Brantley	615-345-1115 901-372-7962 901-372-7962	The Laboratory PM will notify (verbally or via e-mail) the Resolution Consultants FTL immediately upon receipt of any chain-of-custody/sample receipt variances for clarification or direction from the Resolution Consultants FTL. The Resolution Consultants FTL will notify (verbally or via e-mail) the Resolution Consultants TOM within 1 business day, if corrective action is required. The Resolution Consultants TOM will notify (verbally or via e-mail) the Laboratory PM and the Resolution Consultants FTL within 1 business day of any required corrective action.
Analytical Corrective Actions	Empirical Laboratories PM Resolution Consultants Project Chemist	Sonya Gordon Tina Cantwell	615-345-1115 901-372-7962	The laboratory shall notify the Resolution Consultants' chemist of any analytical data anomaly within 1 business day of discovery. After the laboratory receives guidance from Resolution Consultants' chemist, the laboratory shall initiate any corrective action to prevent further anomalies.

Communication Pathways				
Communication Drivers	**Responsible Entity**	**Name**	**Phone Number**	**Procedure (Timing, Pathway To/From, etc.)**
Analytical Data Quality Issues	Empirical Laboratories PM Resolution Consultants Project Chemist Resolution Consultants TOM Navy RPM	Sonya Gordon Tina Cantwell Ben Brantley Ben Simes	615-345-1115 901-372-7962 901-372-7962 847-688-2600 x 320	The laboratory PM notifies (verbally or via e-mail) the Resolution Consultants' chemist within 1 business day of when an issue related to laboratory data is discovered. Resolution Consultants' chemist notifies Resolution Consultants' TOM within 1 business day. Resolution Consultants' chemist notifies the Resolution Consultants' TOM verbally or via e-mail within 48 hours of validation completion that a non-routine and significant laboratory quality deficiency has been detected that could affect this project and/or other projects. Resolution Consultants' TOM verbally advises the Navy RPM within 24 hours of notification from the chemist. The Navy RPM takes corrective action that is appropriate for the identified deficiency. If there are significant data Quality or Non-usable data issues the NAVFAC LANT QAO/Chemist will be contacted to ensure the issues don not have the potential to impact other Navy projects.
Reporting Data Validation Issues/Data Validation Corrective Actions	Resolution Consultants Project Chemist Resolution Consultants TOM	Tina Cantwell Ben Brantley	901-372-7962 901-372-7962	The Resolution Consultants project chemist or data validator will perform validation as specified in Worksheets #34, #35, and #36, and will contact the laboratory as soon as possible if issues are found that require corrective action. If, during the data validation process, the Resolution Consultants project chemist or data validator identifies non-usable data that require corrective action, the Resolution Consultants TOM will coordinate with the project chemist to take corrective action appropriate for the identified deficiency to ensure the project objectives are met. Corrective action may include resampling and/or reanalyzing the affected samples, as determined by the Resolution Consultants TOM.

Communication Pathways				
Communication Drivers	**Responsible Entity**	**Name**	**Phone Number**	**Procedure (Timing, Pathway To/From, etc.)**
Notification of Non-Usable Data	Empirical Laboratories PM Resolution Consultants Project Chemist Resolution Consultants TOM Navy RPM TDEC RPM	Sonya Gordon Tina Cantwell Ben Brantley Ben Simes Roger Donovan	615-345-1115 901-372-7962 901-372-7962 847-688-2600 x 320 615-532-0864	If the laboratory determines that any data they have generated is non-usable, the Laboratory PM will notify (verbally or via e-mail) the Resolution Consultants project chemist within 1 business day of when the issue is discovered. The Resolution Consultants project chemist will notify (verbally or via e-mail) the Resolution Consultants TOM within 1 business day of the need for corrective action, if the non-usable data is a significant issue (i.e., critical sample data). Corrective action may include resampling and/or reanalyzing the affected samples. If the Resolution Consultants project chemist or data validator identifies non-usable data during the data validation process, the TOM will be notified verbally or via e-mail within 48 hours of validation completion that a non-routine and significant laboratory quality deficiency has resulted in non-usable data. The Resolution Consultants TOM will take corrective action appropriate for the identified deficiency to ensure the project objectives are met. The Resolution Consultants TOM will notify (verbally or via e-mail) the Navy RPM of any problems with the laboratory or analysis that could significantly affect the usability of the data or project failures that impact the ability to complete the scope of work. If there are significant data Quality or Non-usable data issues the NAVFAC LANT QAO/Chemist will be contacted to ensure the issues don not have the potential to impact other Navy projects. Such notification will be made within 1 business day of when the issue is discovered. The Navy RPM will notify the TDEC RPM when any significant corrective action is taken.

Notes:

RPM	=	Remedial Project Manager	FTL	=	Field Team Leader
TOM	=	Task Order Manager	NSA	=	Naval Support Activity
IR	=	Installation Restoration	SSO	=	Site Safety Officer
HSM	=	Health and Safety Manager	SAP	=	Sampling and Analysis Plan
TDEC	=	Tennessee Department of Environment and Conservation	QAO	=	Quality Assurance Officer
PM	=	Project Manager			

SAP WORKSHEET #7: PERSONNEL RESPONSIBILITIES TABLE

(UFP-QAPP Manual Section 2.4.3)

Name	Title/Role	Organizational Affiliation	Responsibilities
Ben Simes	Remedial Project Manager	NAVFAC Midwest	Primary Point of Contact for the Navy. Oversees project implementation, including scoping, data review, and evaluation, on behalf of the Navy.
Jim Heide	Installation Environmental Program Manager	NSA Mid-South	Oversees project implementation data review, and evaluation on behalf of NSA Mid-South.
Roger Donovan	Remedial Project Manager	TDEC DSWM	Functions as primary TDEC interface. Participates in scoping and data review/evaluation, and provides review and approval of project deliverables.
Charles Burroughs	Remedial Project Manager	TDEC DSWM	Functions as secondary TDEC interface. Participates in scoping and data review/evaluation, and provides review and approval of project deliverables.
Ben Brantley	Task Order Manager	Resolution Consultants	Primary point of contact for Resolution Consultants. Oversees project implementation, including financials, schedule, and technical aspects.
Kate Freeman	Field Team Leader/ Site Safety Officer	Resolution Consultants	Supervises, coordinates, and performs field activities. Responsible for onsite project-specific health and safety training and monitoring site conditions. Details are in Health and Safety Plan.
Tina Cantwell	Project Chemist/QAO/Data Validation Manager	Resolution Consultants	As project chemist, prepares laboratory scopes of work, and coordinates laboratory related functions with laboratory. Performs or oversees data quality reviews and quality assurance of data validation deliverables. As QAO, ensures quality aspects of the project are implemented, documented, and maintained. As data validation manager, performs or oversees data validation and data input in both the project database and the Navy's Naval Installation Restoration Information Solution database.
John Knopf	Health and Safety Manager	Resolution Consultants	Responsible for providing health and safety training for all personnel and approving the site-specific Health and Safety Plan. Prepares health and safety reports for management.
Sonya Gordon	Laboratory Project Manager/ Analytical Subcontractor	Empirical Laboratories, LLC	Coordinates analyses with laboratory staff, ensures that scope of work is followed, provides quality review of data packages, and communicates with Resolution Consultants project staff.

Notes:

TDEC DSWM = Tennessee Department of Environment and Conservation — Division of Solid Waste Management
NAVFAC Midwest = Department of the Navy, Naval Facilities Engineering Command, Midwest
NSA = Naval Support Activity
QAO = Quality Assurance Officer

SAP WORKSHEET #9: PROJECT PLANNING SESSION PARTICIPANTS SHEET

(UFP-QAPP Manual Section 2.5.1)

Project Name: NSA Mid-South **Project Dates of Sampling:** Field Activities for 2013 **Project Manager:** Ben Brantley	**Site Name:** SWMU 39 Sub-Slab Groundwater Sampling **Site Location:** NSA Mid-South; Millington, Tennessee
Date of Session: October 10 — 11, 2012 Base Cleanup Team Meeting **Scoping Session Purpose: Discuss SWM 39 soil removal action and water-infiltration issue.**	

Name	Title	Affiliation	Phone #	E-mail Address
Roger Donovan	Remedial Project Manager	TDEC DSWM	615-532-0864	roger.donovan@tn.gov
Charles Burroughs	Head of DSWM	TDEC DSWM	615-532-0863	charles.burroughs@state.tn.us
Jim Heide	Head of Public Works/Environmental	NSA Mid-South	901-874-5467	jim.heide@navy.mil
Jack Carmichael	Technical Specialist	USGS	615-837-4704	jkcarmic@usgs.gov
Ben Simes	Remedial Project Manager	NAVFAC Midwest	847-688-2600 x320	benjamin.simes@navy.mil
Howard Hickey	Co-Remedial Project Manager	NAVFAC Midwest	847-688-5999 x243	howard.hickey@navy.mil
Scott Powell	Senior Project Manager	Lee & Ryan	248-909-7290	spowell@leeandryan.com
Ben Brantley	Task Order Manager	Resolution Consultants	901-372-7962	bbrantley@ensafe.com
Kate Freeman	Field Team Leader	Resolution Consultants	901-372-7962	ccoleman@ensafe.com

Notes:

TDEC DSWM	=	Tennessee Department of Environment and Conservation — Division of Solid Waste Management
NSA	=	Naval Support Activity
USGS	=	United States Geological Survey
NAVFAC Midwest	=	Department of the Navy, Naval Facilities Engineering Command, Midwest

Comments: During the October 2012 BCT meeting, Lee and Ryan presented data from the sub-slab soil removal conducted at SWMU 39. To assess potential VOC impacts to the shallow groundwater, a limited groundwater investigation was discussed by the Project Team, consisting of temporary wells within the deepest part of the former excavation and a one-time sampling event for the VOCs that were detected in the infiltrated groundwater, specifically perchloroethylene (PCE), trichloroethylene (TCE), cis-1,2 dichloroethlyene (DCE), n-butylbenzene, benzene, toluene, ethylbenzene, xylenes, 1,2,4-trimethylbenzene, and naphthalene. Since vinyl chloride (VC) was also detected in the confirmation soil samples slightly above the residential Regional Screening Level (EPA, 2013), VC will be included in the analyses. The groundwater sampling design presented in Worksheet #17 was conceptually discussed amongst the Project Team members.

Consensus Decisions:

Develop a groundwater sampling design that will address whether residual VOCs are present in the perched groundwater that entered the excavation.

Action Item: Prepare and implement a SAP Addendum following Project Team approval.

SAP WORKSHEET #10: CONCEPTUAL SITE MODEL

(UFP-QAPP Manual Section 2.5.2)

See attached *UFP Quality Assurance Project Plan — Remediation of SWMU 39 T CE Plume* (Lee and Ryan, March 2012)

SAP WORKSHEET #11: DATA QUALITY OBJECTIVES/SYSTEMATIC PLANNING PROCESS

(UFP-QAPP Manual Section 2.6.1)

The DQOs presented below were developed in accordance with the *Guidance on Systematic Planning Using the Data Quality Objectives Process* (EPA QA/G-4) (USEPA, 2006) and are intended to fulfill the RCRA Facility Investigation (RFI) work plan requirements specified in Attachment 4.2:I of the Facility's RCRA permit.

11.1 Problem Statements

VOCs are present in perched groundwater (Lee and Ryan, 2012) at concentrations above the MCLs posing a potential environmental concern to future construction works and the deeper, fluvial deposits groundwater.

11.2 Goals of the Study

The primary goals of the study are to:

1. Collect adequate groundwater data to determine if perched, loess groundwater is impacted by the specific VOCs: cis-1,2-dichloroethene, t etrachloroethene, trichloroethene, vinyl chloride, benzene, toluene, ethyl benzene, xylenes, 1,2,4-trimethylbenzene, n-butylbenzene, and naphthalene.

2. Evaluate groundwater data against human health benchmarks (Worksheet #15) to determine whether additional action (remedial or assessment) is warranted.

11.3 Information Inputs to Resolve the Problem

Data required for making the decisions include the following:

1. Chemical Data: Groundwater will be analyzed for VOCs as prescribed in Worksheet #18. A history of site information indicates no other contaminants of concern exist for the site. Worksheet #21 presents the sampling methods to be used and Worksheet #19 presents the analytical methods to be used.

2. Sample Location Data: For spatial presentation of data and establishing the groundwater flow direction, all sample points will be surveyed by a Tennessee licensed professional land surveyor for horizontal coordinates and

vertical elevations. Horizontal coordinates will be referenced to the North American Datum of 1983 and accurate to 0.1 foot. Water depths intervals will be measured to 0.01 feet by Resolution Consultants field personnel using an electronic water level indicator.

3. Screening values: The laboratory data will be compared to Maximum Contaminant Levels (MCLs) so that appropriate decisions can be made. Laboratory quantitation limits will be low enough to measure VOC concentrations equal to or less than MCLs. The applicable screening values for VOCs in Worksheet #15.

11.4 Boundaries of the Study

SWMU 39 consists of approximately 1 acre of open field and Building S-203 and grass covered fields where Buildings S-74 and S-212 formerly resided. The horizontal boundaries of the site are the SWMU 39 footprint shown on Figure 11-1 and the vertical boundaries of the study area are from the ground surface to 20 feet below ground surface (bgs). Perched groundwater is expected to be encountered between 5 and 15 feet bgs.

11.5 Analytical Approach

The approach described below explains the decision rules that will be used for the proposed data collection. T he decision rules are intended to define the extent of VOCs in perched groundwater in the area of the former S-74 excavation and where it intercepted a former UST.

1. Step-out sampling will be considered as a me ans to determine contamination extent; an approach will be proposed, discussed, and agreed upon before scoping and planning details pertaining to any future supplemental sampling efforts. The PALs, analytical methods, and target analytes are listed in Worksheet #15

2. If VOCs are less than PALs listed in Worksheet #15, then the extent of contamination will be considered fully defined, the temporary wells will be closed and a request for "no further action" will be submitted to TDEC with the supporting analytical data.

3. If the BCT determines, based on the proposed data, that the presence of VOCs have been adequately delineated in all environmental media, then assessment activities will be considered complete and data evaluation will be conducted. At a minimum, this evaluation must consider the following factors:

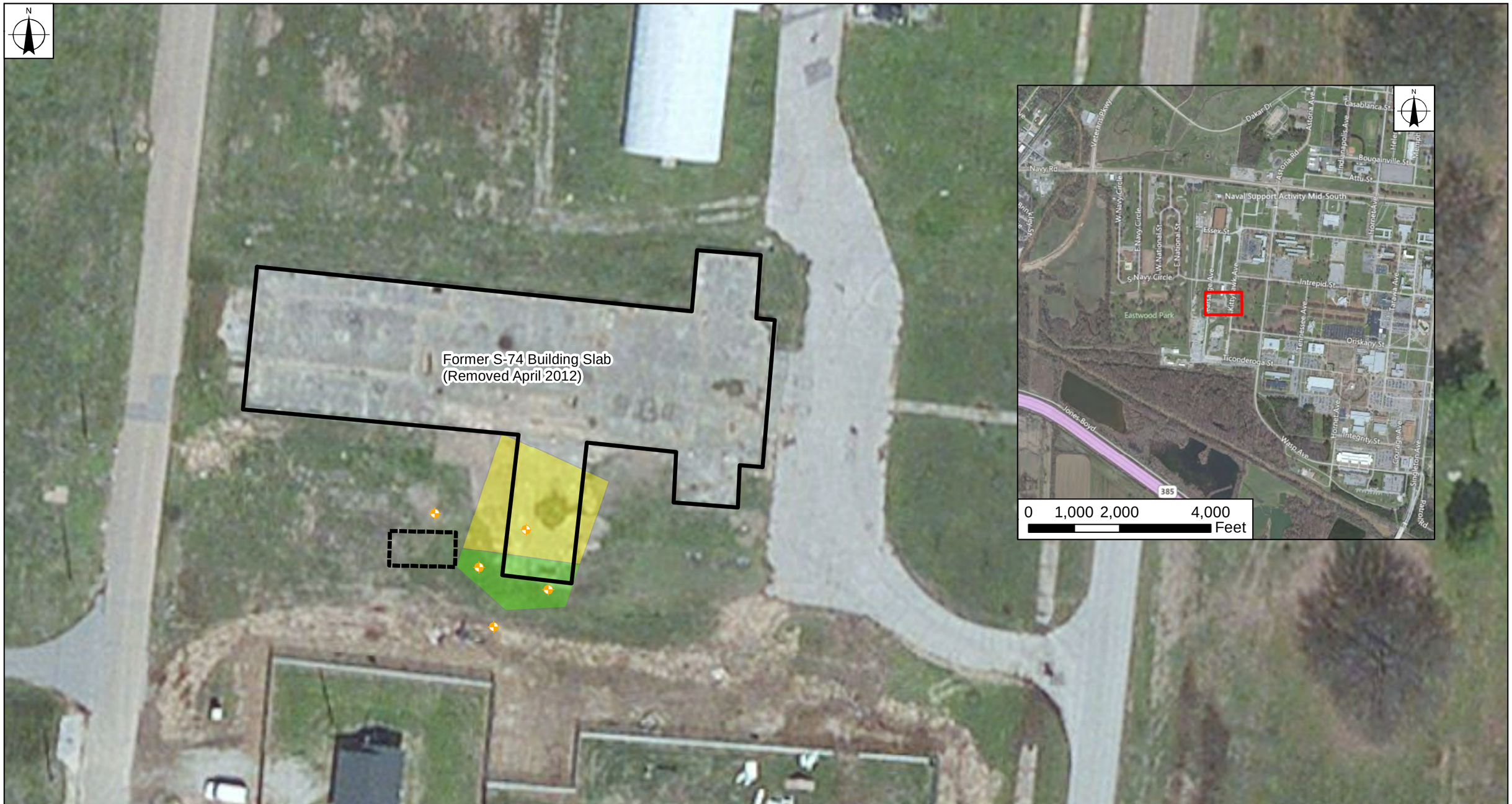

Legend

- Proposed Temporary Monitoring Well
- Former Building Site Slab
- Former UST
- Former Removal Area (4-5' Excavation Depth)
- Former Removal Area (10-12' Excavation Depth)

1 inch = 50 feet

0 25 50 75 Feet

Basemap Source: (c) 2010 Microsoft Corporation and its data suppliers

FIGURE 11-1
PROPOSED TEMPORARY MONITORING WELLS
SWMU 39 SUB-SLAB
GROUNDWATER INVESTIGATION
NSA MID-SOUTH

NAVFAC Naval Facilities Engineering Command

RESOLUTION CONSULTANTS

REQUESTED BY: B. BRANTLEY	DATE: 1/21/2013
DRAWN BY: B. LIPSCOMB	TASK ORDER NUMBER: XXXXX

D:\projects\NsaMidSouth\prop_mw.mxd

— Frequency of detection of each constituent
— Frequency and magnitude of screening criteria exceedances for each constituent
— Magnitude of concentrations within, and on the perimeter of, the investigated areas
— Identities of COPCs and their estimated contributions to unacceptable levels of risk

A decision will be made using the above criteria for recommending the next course of action, including corrective measures and/or supplemental investigative activities.

11.6 Performance Criteria

The objective of this section is to complete the following:

- Identify potential sources of study error (i.e., field error, analytical error)
- Establish and identify the methods used to reduce potential sources of error
- Determine how decision errors will be managed during the project

Sampling Strategy

The sampling strategy is designed to characterize the extent of contamination and collect adequate data to conduct a human health risk evaluation.

Sources of Error

Sources of error may be divided into two main categories: sampling errors and measurement errors. A sampling error occurs when the sampling design, planning, and implementation do not provide for a representative range of heterogeneity at the site. A measurement error occurs because of performance variance from laboratory instrumentation, analytical methods, and operator error. The USEPA identifies the combination of all these errors as a "total study error" (USEPA, 2006). One objective of the investigation is to reduce the total study error so that decision-makers can be confident that the data collected accurately represent the chemical characteristics of the site.

Managing Decision Error

The investigation will utilize decision-error minimization techniques in sampling design, sampling methodologies, and laboratory measurement of COPCs. Possible decision errors will be minimized during the field investigation by using the following methods:

- Use of standard field sampling methodologies (as discussed in Worksheets #19, #20, and #21).

- Use of applicable analytical methods (discussed in Worksheets #18, #19, #23, and 30) for sample analysis by a competent analytical laboratory certified by the Department of Defense Environmental Laboratory Accreditation Program (DoD ELAP) to reduce measurement errors.

- Confirm analytical data to identify and control potential laboratory error and sampling error by using spikes, blanks, and replicated samples.

Decision errors are based on sample design and measurement errors. Assuming that the best possible professional judgment was used to develop the sampling plan (i.e., position sampling locations), the most significant decision errors will be associated with field and laboratory techniques involved in the collection and analysis of the data.

Sampling Methodologies and Procedures

Possible decision errors generated by sampling errors will be minimized during the field investigation by applying standardized field sampling methodologies (discussed in Worksheets #21 and #22). Sampling activities will be performed in accordance with the SOPs specified in this SAP.

Managing Laboratory Sampling Error

Control of potential laboratory measurement error and sampling error will be minimized using spikes, blanks, and duplicates. Sampling error may be introduced when the laboratory chemist selects a single portion of the field sample for laboratory analysis. However, this issue is less relevant to the discrete sampling approach as sub-sampling is generally not implemented at the laboratory.

The laboratory will provide full electronic data deliverable files, portable document format (PDF) files of the data deliverables for all project data, and a hard copy of data deliverables for all results including results from secondary subcontract laboratories. Designated samples will be used to obtain necessary sub-samples for laboratory quality control (QC) measurements (i.e., analytical sample duplicate and sample matrix spike/matrix spike duplicate [MS/MSD]). Tasks will be completed using the laboratory SOPs.

Data quality will be evaluated as part of the verification/validation and the data usability processes described in Worksheets #34 through #36. Failure to meet validation targets or limitations on data use identified during a data usability assessment shall be described in the project report. PDF copies of all analytical data packages will be stored on CD-ROM, archived in the NAVFAC Midwest Administrative Record, and uploaded onto the Naval Installation Restoration Information Solution (NIRIS) system at the close of the project. All other data generated in the field and reports generated for the project will be stored as computer readable data files by Resolution Consultants.

11.7 Sampling Design

The sampling design for the site has been developed to optimize resources and generate data to satisfy the DQOs. The sampling design, rationale, and locations are summarized in Worksheets #17 and #18. These worksheets identify where soil and sediment samples will be collected and the analyses to be conducted for each sample.

SAP WORKSHEET #12: FIELD QUALITY CONTROL SAMPLES

(UFP-QAPP Manual Section 2.6.2)

Measurement Performance Criteria Table — Field Quality Control Samples				
Quality Control Sample	**Analytical Group**	**Frequency**	**Data Quality Indicators**	**Measurement Performance Criteria**
Trip Blank	VOCs	One per cooler to the laboratory containing volatiles	Accuracy/Bias/ Contamination	No analytes > ½ LOQ, except common lab contaminants, which must be < LOQ
Field Duplicate	VOCs	One per sampling event	Precision	Values > 5X LOQ: RPD must be ≤30 (aqueous) [1]
Cooler Temperature Indicator	All	One per cooler	Representativeness	Temperature less than 6 degrees Celsius

Notes:

[1] If duplicate values are less than five times the LOQ, the absolute difference should be less than or equal to two times the LOQ.

VOCs = Volatile organic compounds
LOQ = Limit of Quantitation
RPD = Relative Percent Difference
DoD QSM = *Department of Defense Quality Systems Manual for Environmental Laboratories*, Version 4.2, October 2010 or the most recent version at the time of sampling

SAP WORKSHEET #14: FIELD PROJECT TASKS

(UFP-QAPP Manual Section 2.8.1)

Pre-Sampling Tasks

- Subcontract procurement
- Equipment and supply requisition
- Schedule field and support staff
- Prepare site-specific H&S Plan
- Locate underground utilities (see text additional below)
- Apply for well construction and injection permits

Utility Clearance

The Resolution Consultants FTL will submit a dig permit to the NAS Mid-South environment point of contact at least 15 business days in advance of the site access to initiate the utility clearance process for all intrusive sampling locations. The 15 business days will allow the Base Operations Support contractor to mark Navy utilities. In addition, the Resolution Consultants FTL will contact the one-call utility locator service at least 7 days prior to commencement of field work to complete a utility clearance ticket for the areas under investigation.

Utilities that are identified in the field, but not shown or incorrectly located on the work approval documentation, will be marked directly on the document and returned to the NAS Mid-South point of contact for inclusion in the Geographic Information System database.

Direct Push Technology (DPT) Groundwater Investigation

- Reference Worksheet #21 for the appropriate DPT sampling SOP
- Verify utility clearance at proposed DPT locations
- Complete all applicable forms (soil boring logs, Safe Work Assessment Permit [SWAP]) daily
- Review health and safety plan with DPT contractor
- Construct temporary wells at the locations shown on Figure 11-1.
    - The Geoprobe rods and soil sampler will be pushed at 4 or 5-foot continuous intervals and retrieved soil will be described using the Unified Soil Classification System.

— Upon reaching the completion depth of the borehole (approximately 7 feet below the saturated zone), temporary 1-inch diameter monitoring wells will be constructed, with 10-foot length, pre-packed PVC screens.

— All wells will be purged with a peristaltic pump and purge water will be collected in a 55-gallon drum and staged near the closest sanitary sewer manhole while pending analytical data and discharge approval from the City of Millington.

- All samples will be analyzed for the following VOCs COPCs via SW-846 Method 8260B: PCE, TCE, cis-1,2 DCE, VC, n-butylbenzene, benzene, toluene, ethylbenzene, xylenes, 1,2,4-trimethylbenzene, and naphthalene.

Groundwater Sampling Tasks

- Reference Worksheet #21 for the appropriate groundwater sampling SOPs.

- Complete all applicable forms (monitoring well sampling logs, SWAP) on a daily basis.

- Review health and safety plan with field sampling crews.

- Groundwater Level Measurements:

  — One comprehensive round of water level measurements will be collected from the five proposed temporary wells. In addition water levels will be measured in all wells before the start of purging activities. Water level measurements will be recorded to the nearest 0.01 foot and referenced to a top of casing mark designated on each well. T he water level indicator will be decontaminated before conducting measurements and immediately after each well.

- Collect Groundwater Samples:

  — The most downgradient, least contaminated wells will be sampled first concluding with upgradient source area wells.

  — Groundwater samples will be collected from monitoring wells using dedicated sample tubing and low-flow methods.

— Groundwater samples will be collected from temporary wells by placing the pump/tubing 5-feet from the bottom of the well screen interval. Water quality parameters (specific conductance, pH, turbidity, temperature, dissolve oxygen, and oxygen reduction potential) will be measured and recorded (approximately every 5 minutes) prior to sampling using a flow-through cell multi-meter. Groundwater sampling will begin when water quality parameters have stabilized for three consecutive readings and water level drawdown is stable. Depth to groundwater before and during pumping, water quality parameter readings, purge and sample flow rates, total well depths, sample dates and times will be recorded on the groundwater sampling form.

Field Decontamination

- Reference Worksheet #21 for the appropriate decontamination SOP.

Field Documentation Procedures

- A summary of all field activities will be properly recorded in a bound, field logbook assigned to the project as outlined in the Logbook SOP. All entries will be made in ink and incorrect entries will be stricken with a single line, initialed, and dated by the person making the correction.

- At a minimum, the following information will be included in the field logbook:

  — Project name

  — Date of field activities

  — Arrival and departures times of field sampling crews

  — Name of all field personnel, subcontract personnel, and contact info

  — Description of subcontractor activities

  — Description of well construction, sampling, injection activities, any relevant site activities

— Sample pick-up/delivery information, air-bill numbers, carrier, lab purchase order, chain-of-custody number

— Health and safety issues

Analytical Tasks

Analyses will be performed in accordance with the analytical methods identified in Worksheet #18, #19, #23, and #30.

- Chemical analysis of the COPCs for SWMU 39 groundwater will consist of only the following VOCs (vinyl chloride, 1,1-dichloroethene, cis-1,2-dichloroethene, trans-1,2-dichlorothene, tetrachloroethene, and trichloroethene) which will be performed by Empirical Laboratories — a DoD Environmental Laboratory Accreditation Program (ELAP) approved laboratory. Empirical's DoD ELAP certificate may be found in Appendix D.

Data Management

- *Data Handling and Management:* Upon completion of field activities, all secondary data from field sampling forms will be organized by date and entered into Excel for electronic archiving/data evaluation. The field forms, chain-of-custody, air bills, and logbooks will be placed in the project files after the completion of the field program. The electronic data results will be automatically downloaded into the Resolution Consultants database for use in data evaluation and subsequent report preparation. Final validated environmental data, special data, and Land Use Control information for Controlled Areas will be uploaded into the NIRIS database.

- *Data Tracking:* Data will be tracked from its generation to its archiving in the Resolution Consultants project-specific files for NSA Mid-South. The Resolution Consultants project chemist (or designee) is responsible for tracking the samples collected and shipped to the subcontracted laboratory. Upon receipt of the data packages from the analytical laboratory, the project chemist will oversee the data validation effort, which includes verifying that the data packages are complete and results for all samples have been delivered by the analytical laboratory.

- *Data Storage, Archiving, and Retrieval:* The data packages received from the subcontracted laboratory are tracked in the data validation logbook. After the data are validated, the data

packages will be entered into the Resolution Consultants file system and archived in secure project files. The field records including logbooks, sample logs, chain-of-custody records, and field calibration logs will be submitted into the file system prior to archiving by the TOM (or designee). The project files are audited for accuracy and completeness by the TOM (or designee). At the completion of the Navy contract, all original e-records will be stored by Resolution Consultants and eventually transferred to the Navy.

Documentation and Reporting

- All field activities associated with the SWMU 39 investigation wells will be incorporated into a Task Summary report, which will include a summary of the completed tasks, well construction logs, field records, water quality parameters, groundwater flow map, groundwater monitoring data, and deviations that may have occurred from the original work plan.

- All administrative record files, post decision files, and site files will be submitted to the NIRIS data management system in accordance with the *Environmental Restoration Recordkeeping Program Manual, Appendix G, NAVFAC Contractor Work Instruction* (NFESC, September 2009)

SAP WORKSHEET #15: REFERENCE LIMITS AND EVALUATION TABLE

(UFP-QAPP Manual Section 2.8.1)

Reference Limits and Evaluation Table								
Matrix:	Groundwater							
Analytical Group:	Volatile Organic Compounds							
Analyte	**CAS**	**Analytical Method**	**Units**	**Project Action Limit: USEPA MCL**	**Project Quantitation Limit Goal**	**Laboratory Specific Limits**		
						LOQ	**LOD**	**DL**
cis-1,2-Dichloroethene	156-59-2	8260B	µg/L	70	23.3	1.00	0.50	0.25
Tetrachloroethene	127-18-4	8260B	µg/L	5	1.7	1.00	0.50	0.25
Trichloroethene	79-01-6	8260B	µg/L	5	1.7	1.00	0.50	0.25
Butylbenzene, n-	104-51-8	8260 B	µg/L	780 *	260	1.00	0.50	0.25
Benzene	71-43-3	8260B	µg/L	5	1.7	1.00	0.50	0.25
Vinyl chloride	75-01-4	8260B	µg/L	2	0.67	1.00	0.50	0.25
Toluene	108-88-3	8260B	µg/L	1,000	333	1.00	0.50	0.25
Xylenes	1330-20-7	8260B	µg/L	10,000	3,333	3.00	1.50	0.75
Ethyl benzene	100-41-4	8260B	µg/L	700	233	1.00	0.50	0.25
Naphthalene	91-20-3	8260B	µg/L	0.14 *	0.047	2.00	1.00	0.50
Trimethylbenzene (1,2, 4-)	95-63-6	8260B	µg/L	15 *	5	1.00	0.50	0.25

Notes:

CAS = Chemical abstract services
MCL = USEPA Maximum Contaminant Level
LOQ = Limit of quantitation
LOD = Limit of detection
DL = Detection limit
µg/L = Micrograms per liter
USEPA = U.S Environmental Protection Agency
* = U.S. EPA Regional Screening Level for tap water from http://www.epa.gov/region9/superfund/prg/

SAP WORKSHEET #17: SAMPLING DESIGN AND RATIONALE

(UFP-QAPP Manual Section 3.1.1)

Sample Locations and Numbers

- The proposed SWMU 39 groundwater sample locations are shown on Figure 11-1. Five locations will be sampled for perched groundwater with three of the wells placed in the former excavation area and two of the wells placed in native, undisturbed soil outside the former excavation footprint and former UST. The objectives of the wells are to establish whether the impacted groundwater identified during the soil removal is limited to that which infiltrated the excavation or does it extend into the perched groundwater outside the excavation footprint.

Sampling Frequency

- SWMU 39 monitoring wells are scheduled for a one-time sampling event. Pending the outcome of the data, an additional sampling event may be later warranted.

Sampling Parameters

- The COPCs are the following: cis-1,2-dichloroethene, tetrachloroethene, trichloroethene, vinyl chloride, benzene, toluene, ethyl benzene, xylenes, 1,2,4-trimethylbenzene, n-butylbenzene, and naphthalene.

SAP WORKSHEETS #18, 19, 20, AND 30: LOCATION-SPECIFIC SAMPLING METHODS/SOP REQUIREMENTS TABLE

(UFP-QAPP Manual Sections 3.1.1 and 3.5.2.3)

Field Project Implementation (Field Project Instructions)

Sample Details							
NSA Mid-South CTO F278 — SWMU 39 **SWMU 39 Perched Groundwater Sampling** **Laboratory:** Empirical Laboratories, LLC 621 Mainstream Drive, Suite 270, Nashville, Tennessee 37228, (615) 345-1115, Sonya Gordon, sgordon@empirlabs.com						**Analysis Group:**	**Selected VOCs**
						Preparation and Analytical Method:	SW846 5030/8260B
						Analytical Laboratory SOP Reference:	SOP 202
						Data Package Turnaround Time:	21 Days
						Container Type/Volume required:	3 — 40mL glass vials
						Preservative:	HCL to pH <2; Cool to ≤ 6C; no headspace
				Coordinates			
Site	**Matrix**	**Station ID**	**Sample ID[1]**	**X**	**Y**	**Depth/Sampling Intervals (ft/bgs)**	
SWMU 39	Groundwater	039GLS01	039GLS01-01	TBD[1]	TBD[1]	TBD	1
SWMU 39	Groundwater	039GLS02	039GLS02-01	TBD[1]	TBD[1]	TBD	1
SWMU 39	Groundwater	039GLS03	039GLS03-01	TBD[1]	TBD[1]	TBD	1
SWMU 39	Groundwater	039GLS04	039GLS04-01	TBD[1]	TBD[1]	TBD	1
SWMU 39	Groundwater	039GLS05	039GLS05-01	TBD[1]	TBD[1]	TBD	1
Field Quality Control Samples							
SWMU 39	Field Duplicate	TBD	TBD	NA	NA		1
SWMU 39	Trip Blank	TBD	TBD	NA	NA		1
SWMU 39	Matrix Spike/Matrix Spike Duplicate	TBD	TBD	NA	NA		1
						Total Number of Samples to the Laboratory	7

Notes:

For field quality control sample scoping, the sampling event is anticipated to last one day
Frequency of QA/QC sample collection:
Field Duplicate — One per sampling event
Trip Blank — One per cooler to the laboratory containing volatiles

CTO = Contract task order
ft bgs = Feet below ground surface
HCL = Hydrochloric acid
NA = Not applicable
SWMU = Solid Waste Management Unit
mL = Milliliter
NSA = Naval Support Activity
SOP = Standard operating procedure
TBD = To be determined
USEPA = United States Environmental Protection Agency
VOC = Volatile organic compounds: vinyl chloride, 1,1-dichloroethene, cis-1,2-dichloroethene, trans-1,2-dichlorothene, tetrachloroethene, and trichloroethene

[1] Coordinates will be determined by a State of Tennessee licensed land-surveyor.

SAP WORKSHEET #21: PROJECT SAMPLING SOP REFERENCES TABLE

(UFP-QAPP Manual Section 3.1.2)

Field SOPs Reference Table					
SOP Reference Number	**Title/Author**	**Revision Date or Version Number**	**Location of SOP**	**Any planned deviation for Project Work**	**Comments**
SOP-3-01 (MS)	Utility Clearance/Resolution Consultants	Revision 1; June 2013	Appendix C	No	
SOP-3-02	Field Log Books/Resolution Consultants	Revision 0; May 2012	Appendix C	No	
SOP-3-03	Sample Labeling and Chain-of-Custody/Resolution Consultants	Revision 0; May 2012	Appendix C	No	
SOP-3-04 (MS)	Packaging and Shipping Procedures for Low Concentration Samples/Resolution Consultants	Revision 0; May 2012	Appendix C	No	
SOP-3-05 (MS)	Investigative Derived Waste Management/Resolution Consultants	Revision 1; April 2013	Appendix C	No	
SOP-3-6	Equipment Decontamination/Resolution Consultants	Revision 0; May 2012	Appendix C	No	
SOP-3-08 (MS)	Soil Classification/Resolution Consultants	Revision 0; May 2012	Appendix C	No	
SOP-3-14	Monitoring Well Sampling/Resolution Consultants	Revision 0; May 2012	Appendix C	No	
SOP-3-17	Water Quality Parameter Testing for Groundwater Sampling/Resolution Consultants	Revision 0; May 2012	Appendix C	No	
SOP-3-18 (MS)	Direct Push Sampling Techniques/Resolution Consultants	Revision 0; May 2012	Appendix C	No	
SOP-MS Access	NSA Mid-South Installation Access	Revision 0; April 2013	Appendix C	No	

Note:
SOP = Standard operating procedure

SAP WORKSHEET #22: FIELD EQUIPMENT CALIBRATION, MAINTENANCE, TESTING, AND INSPECTION TABLE

(UFP-QAPP Manual Section 3.1.2.4)

Field Equipment Calibration, Maintenance, Testing, and Inspection Table

Field Equipment	Activity[1]	Frequency	Acceptance Criteria	Corrective Action	Responsible Person	SOP Reference	Comments
Electronic Water Level Indicator	Visual Inspection Field checks as per manufacturer	Daily Once upon receiving from vendor or company stock	0.01 foot accuracy	Operator correction or replacement	Resolution Consultants FTL	NA	None
YSI 556 Series (or similar) Multi-Parameter Water Quality Meter	Visual Inspection Calibration/ Verification	Daily Beginning of each day	pH ± 0.2 standard units Specific Conductance ± 5% Dissolved oxygen ± 0.03 mg/L Temperature ±0.15 ºC Oxygen reduction potential ± 10 mV	Operator correction or replacement	Resolution Consultants FTL	3-17	None
LaMotte Model 2020e (or similar) Turbidity Meter	Visual Inspection Calibration/ Verification	Daily Beginning of each day	Nephelometric Turbidity Unit <10	Operator correction or replacement	Resolution Consultants FTL	3-17	None

Notes:

[1] = Activities may include calibration, verification, testing, maintenance, and/or inspection.
SOP = Standard operating procedure
FTL = Field Team Leader
% = Percent
mg/L = Milligrams per liter
ºC = Degrees Celsius
mV = Millivolts
NA = Not applicable

SAP WORKSHEET #23: ANALYTICAL SOP REFERENCES TABLE

(UFP-QAPP Manual Section 3.2.1)

Analytical SOP References Table						
Empirical Laboratories, LLC **621 Mainstream Drive, Suite 270** **Nashville, Tennessee 37228** **Sonya Gordon (615) 345-1115**						
Lab SOP Number	**Title, Revision Date, and Number**	**Definitive or Screening Data**	**Analytical Group and Matrix**	**Instrument**	**Variance to QSM**	**Modified for Project Work? (Yes/No)**
Empirical SOP202	*GC/MS Volatiles by EPA Method 624 & SW846 Method 8260B Including Appendix IX Compounds*, Rev226 01/08/2013	Definitive	VOCs — Groundwater and QC blanks	Agilent GC/MS	None	No

Notes:

[1] Analytical procedure produces definitive results; however, the end use of the data will be screening level to assess remedial effectiveness

SOP = Standard operating procedure
QSM = *Department of Defense Quality Systems Manual for Environmental Laboratories*, Version 4.2, October 2010
VOC = Volatile organic compounds
QC = Quality control
GC/MS = Gas chromatography/mass spectrometer

SAP WORKSHEET #28: LABORATORY QC SAMPLES TABLE

(UFP-QAPP Manual Section 3.4)

Laboratory QC Samples						
Matrix:	Groundwater					
Analytical Group:	Volatile Organic Compounds					
Analytical Method:	SW-846 8260B					
SOP Reference:	Empirical SOP202					
QC Sample	**Frequency & Number**	**Method/SOP QC Acceptance Limits**	**Corrective Action**	**Person(s) Responsible for Corrective Action**	**Data Quality Indicator**	**Measurement Performance Criteria**
Internal Standard	Every field sample, standard, and QC sample: Fluorobenzene, Chlorobenzene-d5, 1,4-dichlorobezene-d4	Retention times must be within ± 30 seconds and the response areas must be within -50% to +100% of the ICAL midpoint standard.	Inspect instruments for malfunctions; mandatory reanalysis of samples analyzed while system was malfunctioning.	Analyst, Supervisor, QA Manager	Accuracy/Bias	Retention times ± 30 seconds from the retention time of the midpoint in the ICAL: the response areas must be within -50% to +100% of ICAL midpoint standard.
Method Blank	One per preparatory batch of 20 or fewer samples.	No analytes detected > ½ LOQ and > 1/10 the amount measured in any sample or 1/10 the regulatory limit (whichever is greater). Blank result must not otherwise affect sample results. For common laboratory contaminants, no analytes detected > LOQ (See Box D-1 in QSM V4.2.)	Correct problem; re-prepare and/or reanalyze any sample associated with a blank that fails criteria.	Analyst, Supervisor, QA Manager	Bias/ Contamination	No analytes detected > ½ LOQ and > 1/10 the amount measured in any sample or 1/10 the regulatory limit (whichever is greater). Blank result must not otherwise affect sample results. For common laboratory contaminants, no analytes detected > LOQ (See Box D-1 in QSM V4.2.)
Laboratory Control Sample and if required, Laboratory Control Sample Duplicate	One per preparatory batch of 20 or fewer samples.	%R — DoD QSM Limits RPD must be ≤ 30 (for LCS/LCSD).	Correct problem, then re-prepare and reanalyze the LCS and all samples in the associated preparatory batch for failed analytes, if sufficient sample material is available.	Analyst, Supervisor, QA Manager	Accuracy/Bias Precision also, if LCSD is analyzed	QC acceptance criteria specified in DoD QSM Version 4.2

Laboratory QC Samples						
Matrix:	Groundwater					
Analytical Group:	Volatile Organic Compounds					
Analytical Method:	SW-846 8260B					
SOP Reference:	Empirical SOP202					
QC Sample	**Frequency & Number**	**Method/SOP QC Acceptance Limits**	**Corrective Action**	**Person(s) Responsible for Corrective Action**	**Data Quality Indicator**	**Measurement Performance Criteria**
MS/MSD	One per preparatory batch per matrix	For matrix evaluation, use LCS recovery criteria; RPD $\leq$30%.	Corrective actions will not be taken for samples when recoveries are outside limits and surrogate and LCS criteria are met. If both the LCS and MS/MSD % Rs are unacceptable, then re-prepare and reanalyze the samples and QC samples.	Analyst, Supervisor, QA Manager	Accuracy/Bias/ Precision	QC acceptance criteria specified in DoD QSM Version 4.2
Surrogate	All field and QC samples - four per sample	%R — DoD QSM Limits 1,2-Dichloroethane-d4 (70-120) 4-Bromofluorobenzene (75-120) Dibromofluoromethane(85-115) Toluene-d8 (85-120)	If sample volume is available, then re-prepare and reanalyze for confirmation of matrix interference when appropriate.	Analyst, Supervisor, QA Manager	Accuracy/Bias	QC acceptance criteria specified in DoD QSM Version 4.2

Notes:

QC	=	Quality control
SOP	=	Standard operating procedure
ICAL	=	Initial calibration
QA	=	Quality assurance
LOQ	=	Limit of quantitation
DOD QSM	=	*Department of Defense Quality Systems Manual for Environmental Laboratories*, Version 4.2, October 2010
LCS//LCSD	=	Laboratory control sample/laboratory control sample duplicate
%R	=	Percent recovery
RPD	=	Relative percent difference
MS/MSD	=	Matrix spike/matrix spike duplicate

SAP WORKSHEETS #34 — 36: DATA VERIFICATION AND VALIDATION (STEPS I AND IIA/IIB) PROCESS TABLE

(UFP-QAPP Manual Section 5.2.1), (UFP-QAPP Manual Section 5.2.2), (Figure 37 UFP-QAPP Manual), (Table 9 UFP-QAPP Manual)

Data Review Input	Description	Responsible for Verification (name, organization)	Internal/External
Verification (Step I) Chain-of-custody forms Sample Login/ Receipt	The laboratory sample custodians will review the sample shipment for completeness, integrity, and sign accepting the shipment. All sample labels will be checked against the chain-of-custody form, and any discrepancies will be identified, investigated, and corrected. The samples will be logged in at every storage area and work station required by the designated analyses. Individual analysts will verify the completeness and accuracy of the data recorded on the forms.	Laboratory sample custodians and analysts, Empirical Laboratories	Internal
Verification (Step I) Chain-of-custody forms	The Resolution Consultants data validators will check that the chain-of-custody form was signed/dated by the sampler relinquishing the samples and by the laboratory sample custodian receiving the samples for analyses.	Project chemist or data validators, Resolution Consultants	External
Verification (Step I) SAP sample tables	Verify that all proposed samples listed in the SAP tables have been collected	FTL or designee, Resolution Consultants	External
Verification (Step I) Sample log sheets and field notes	Verify that information recorded in the log sheets and field notes are accurate and complete.	FTL or designee, Resolution Consultants	External
Verification (Step I) Field QC samples	Check that field QC samples, described in Worksheet #12 and listed in Worksheet #20 were collected as required.	FTL or designee, Resolution Consultants	External
Verification (Step I) Analytical data package	All analytical data packages will be verified internally for completeness by the laboratory performing the work. The laboratory project manager (or designee) will sign the case narrative for each data package.	Laboratory project manager, Empirical Laboratories	Internal
Verification (Step I) Analytical data package	The data package will be verified for completeness by the data validators. Missing information will be requested from the laboratory and validation will be suspended until missing data are received.	Project chemist or data validators, Resolution Consultants	External
Verification (Step I) Electronic data deliverables	The electronic data will be verified against the chain-of-custody and hard copy data package for accuracy and completeness.	Data manager and/or validator, Resolution Consultants	External
Validation (Step IIa) Chain-of-custody	Examine the traceability of the data from time of sample collection until reporting of data. Ensure that the custody and integrity of the samples were maintained from collection to analysis and the custody records are complete and any deviations are recorded.	Project chemist or data validators, Resolution Consultants	External

Data Review Input	Description	Responsible for Verification (name, organization)	Internal/External
Validation (Step IIa) Holding Times	Review that the samples were shipped and stored at the required temperature and sample pH for chemically-preserved samples meet the requirements listed in Worksheet #19. Ensure that the analyses were performed within the holding times. If holding times were not met, confirm that deviations were documented.	Project chemist or data validators, Resolution Consultants	External
Validation (Steps IIa/IIb) Laboratory data results for accuracy	Ensure that the laboratory QC samples were analyzed and that the measurement performance criteria, listed in Worksheet #28, were met for all field samples and QC analyses. Check that specified field QC samples were collected and analyzed, as listed in Worksheet #12, and that the analytical QC criteria were met.	Project chemist or data validators, Resolution Consultants	External
Validation (Steps IIa/IIb) Field and laboratory duplicate analyses for precision	Check the field sampling precision by calculating the RPD for field duplicate samples. Check the laboratory precision by reviewing the RPD or percent difference values from laboratory duplicate analyses; MS/MSDs; and LCS/LCSDs. Ensure compliance with the precision goals listed in Worksheet #12 and 28.	Project chemist or data validators, Resolution Consultants	External
Validation (Steps IIa/IIb) Sample results for representativeness	Check that the laboratory recorded the temperature at sample receipt and the pH of the chemically preserved samples to ensure sample integrity from sample collection to analysis.	Project chemist or data validators, Resolution Consultants	External
Validation (Steps IIa/IIb) Project action limits	Assess and document the impact on matrix interferences or sample dilutions performed because of the high concentration of one or more contaminant, on the other target compounds reported as undetected.	Project chemist or data validators, Resolution Consultants	External
Validation (Steps IIa/IIb) Data quality assessment report	Summarize deviations from methods, procedures, or contracts. Qualify data results based on method or QC deviation and explain all the data qualifications. Present tabular qualified data and data qualifier codes and summarize data qualification outliers. Determine if the data met the measurement performance criteria and determine the impact of any deviations on the technical usability of the data.	Project chemist or data validators, Resolution Consultants	External
Validation (Steps IIa/IIb) SAP QC sample documentation	Ensure that all QC samples specified in the SAP were collected and analyzed and that the associated results were within acceptance limits.	Project chemist or data validators, Resolution Consultants	External
Validation (Step IIb) Analytical data deviations	Determine the impact of any deviation from sampling or analytical methods and SOPs requirements and matrix interferences effect on the analytical results.	Project chemist or data validators, Resolution Consultants	External

Data Review Input	Description	Responsible for Verification (name, organization)	Internal/External
Validation (Step IIb) Project quantitation limits for sensitivity	Ensure that the project LOQs were achieved.	Project chemist or data validators, Resolution Consultants	External
Validation (Steps IIa/IIb) Groundwater — VOCs	SW-846 8260B method-specific criteria, the DoD QSM, and those listed in Worksheets # 12, 19, and 28 will be used to assess VOC data. The logic outlined in *USEPA Contract Laboratory Program National Functional Guidelines for Organic Data Review*, (October 1999) will be used to apply qualifiers to data.	Project chemist or data validators, Resolution Consultants	External

Notes:

SAP	=	Sampling and analysis plan
FTL	=	Field team leader
QC	=	Quality control
RPD	=	Relative percent difference
MS/MSD	=	Matrix spike/Matrix Spike duplicate
LCS/LCSD	=	Laboratory control sample/laboratory control sample duplicate
SOP	=	Standard operating procedure
LOQ	=	Limit of quantitation
DoD QSM	=	*Department of Defense Quality Systems Manual for Environmental Laboratories*, Version 4.2, October 2010
VOC	=	Volatile organic compounds
USEPA	=	U.S Environmental Protection Agency

Appendix A
Lee and Ryan Sampling and Analysis Plan

UFP QUALITY ASSURANCE PROJECT PLAN

Remediation of SWMU 39 TCE Plume
NSA Mid-South
Millington, TN 38054

Submitted to:

NAVFAC Midwest
Building 1A, 201 Decatur
Great Lakes, IL 60088

Contract Number: N40083-11-D-0028
Task Order Number: 0001

Submitted by:

Lee & Ryan Environmental Consulting, Inc.
1707 Melody Lane
Greenfield, IN 46140
Phone: 800-680-8987
Fax: 317-467-6588

October 2011
Revised January 2012
Revised March 2012

SAMPLE ANALYSIS PLAN W/ QUALITY ASSURANCE PROJECT PLAN

Remediation of SWMU 39 TCE Plume
NSA Mid-South
Millington, TN 38054

Submitted to:
NAVFAC Midwest
Building 1A, 201 Decatur
Great Lakes, IL 60088

Contract Number: N40083-11-D-0028
Task Order Number: 0001

Lee & Ryan does hereby certify that, to the best of its knowledge and belief, the technical data delivered herewith under this contract is complete, accurate, and complies with all requirements of the contract.

PREPARED BY:

Project Scientist
(800) 680-8987

3/13/2012
Jacob Teuschler (Date)

APPROVED BY:

Project Manager
(317) 753-4239

3/13/2012
Angelo Dattilo, LPG (Date)

Quality Control Manager
(765) 318-3561

3/13/2012
Robert Downey, LPG (Date)

Note: This document is proprietary; revision controlled, and is intended strictly for use by Lee & Ryan in support of specific contractual responsibilities. Copying or further dissemination in any manner is not permitted without written authorization by Lee & Ryan except as may be agreed between Lee & Ryan and the Navy in the terms and conditions of the applicable contract.

Project Name: Remediation of SWMU 39 TCE Plume
Project Number: N40083-11-D-0028 – CTO 0001

Revision Summary

The revisions to Submittal # 8a will be hereafter known as Submittal # 8b and will, in its totality, supersede any and all previously provided versions of the Quality Assurance Project Plan (QAPP)/Sampling Analysis Plan (SAP) submittals. The revisions to Submittal # 8a QAPP, including the Introduction and Appendix A, QAPP Work Book are outlined in the table below.

COMMENTOR	SUBMITTAL NUMBER AND NAME	COMMENT	REVISION
Jon Tucker	Submittal #8a QAPP	1. Use a single acronym for perchloroethylene. Right now you are using both PCE and PERC	Lee & Ryan has revised the QAPP so that only a single acronym is being used for perchloroethylene.
Jon Tucker	Submittal #8a QAPP	2. In the first paragraph of PDF page 11, the document states verification and validation will be performed per USEPA CLP protocols specified in ESC's SOP. This is confusing, First, verification and validation should be performed in accordance with the SAP. The CLP protocols can provide format or flagging guidance but not verification and validation criteria. Also the SOP for performing some verification and validation should be the validation contractors not the laboratories.	Lee & Ryan corrected the document to address the concerns.
Jon Tucker	Submittal #8a QAPP	3. First paragraph of PDF page 11, please give the full name of the laboratory rather than ESC.	Lee & Ryan corrected the document.
Jon Tucker	Submittal #8a QAPP	4. The Executive Summary states that the regulatory source for cleanup goals are the SDWA MCLs and the RSLs. Under regulatory framework mentions only MCLs for TCE, cis-1,2-DCE, and vinyl chloride. WS#9 (PALs) does not have a column to specific the regulatory source of the PAL values. Also a separate table should be prepared for ground water and soils.	Lee & Ryan addressed the issue in the Executive Summary, and regulatory framework section of the document. Furthermore, after seeking some guidance from Mr. Tucker, Lee & Ryan corrected/modified Table 9.
Jon Tucker	Submittal #8a QAPP	5. The Organazational Chart needs to be removed from the end of the Executive Summary and combined with the one on WS#1. The following changes should be	The Organization Chart was moved and revised as requested.

			made: a. Contracting individuals do not need to be added to the chart. b. Data Validation needs to be added to the chart. c. Who is JBL and how is their role regulatory compliance? d. Also a specific title/role should be determined for the NSA Mid-South representative.	
Jon Tucker	Submittal #8a QAPP	6.	The project scoping session needs details concerning what was discussed. Were meeting minutes recorded? Was the final goal of this remediation effort discussed?	Details of the project scoping session were added. The meeting minutes were recorded and submitted as required. The final goal of the remedial effort was not discussed at the scoping meeting, however it is clearly identified in the contract and solicitation.
Jon Tucker	Submittal #8a QAPP	7.	The Section title Regulatory Framework and first two paragraphs are repeated between pages 20 and 24.	The repeated paragraphs were removed.
Jon Tucker	Submittal #8a QAPP	8.	WS#4 does not include the rationale for analyzing VOCs beyond the three listed with MCLs.	WS#4 was revised to include the sampling rationale.
Jon Tucker	Submittal #8a QAPP	9.	The rationale for additional injections and who will make the decision to perform the injection needs to be included in the SAP. The discussion of additional injections and the decision process should be in WS#5.	WS#5 was revised to discuss the decision process for additional injections.
Jon Tucker	Submittal #8a QAPP	10.	WS#5 a. The decision rule format for groundwater is based upon the long-term monitoring model. There needs to be decision rules for the evaluation of the success of the treatment and the involvement of decision making parties for the ISCO treatment. For the evaluation of ISCO, it may not be reasonable to reduce the analyte list or wells to be sampled. b. Soil Decision Rule is incomplete. It should clarify what depth of additional	WS#5 was revised to discuss the decision rules to evaluate the success of treatment for both soil and groundwater.

			material may be removed before additional samples are taken for confirmation.	
Jon Tucker	Submittal #8a QAPP	11.	WS #7, The description of the duplicate is counter to the standard definition. Will two separate results be reported for the same well for the same sampling event? The duplicate should be used to calculate the RPD between the parent and duplicate samples. What other statistical analysis is being considered?	Lee & Ryan has modified W.S.#7 to correct the discrepancy. Only one result will be reported for the sampling event. The duplicates will be used to calculate the RPD between parent and duplicate samples. At the present time, Lee & Ryan is not considering other statistical analyses.
Jon Tucker	Submittal #8a QAPP	12.	W.S. #9 (PAL Table). There should be a separate table for water and soil PALs. The source of the PAL per analyte should be included. The Analytical method MDLs and QLs are not needed, only the laboratory values. A separate MDL study should be performed for water and soil analysis.	Lee & Ryan has modified the work sheet as requested.
Jon Tucker	Submittal #8a QAPP	13.	W.S. #11 (Acceptance Limits): The original comment that was copied over referred to the range description as +/- X%, for example +/-42%. Is this range centered on 100% or a calculated mean recovery? I would usually see the range centered on a calculated mean and that is why centering on 100% recovery seems unusual.	The range is centered on a calculated mean recovery. The table has been corrected to reflect this.
Jon Tucker	Submittal #8a QAPP	14.	W.S. #12 (Validation Criteria): Worksheets for IIB reference the QAPP worksheets that are not being used for Tier II SAPs. The QAPP worksheets are in parentheses; however the SAP specific worksheet numbers should be used. These are WS #s 6,9, and 11. Note that QAPP worksheet #24 is not included in a Tier II SAP. The Step IIa validation Criteria should include method SW-846 method 8000 series requirements and method 8260B(?) requirements. I'm uncertain which version of 8260 is being used since it is not included in the SAP. Though ESC is accredited for 8260B and 860C, WS#4 mentions 8260B and should be clarified through out the SAP.	The worksheet numbers have been corrected and worksheet #24 was removed from the plan as requested. In additiion, all references to 8260 have been corrected to read 8260B.

Jon Tucker	Submittal #8a QAPP	15. During a phone conversation on March 8, 2012, Mr. Tucker mentioned that the numbering on the worksheets jumped around and weren't listed chronologically. In addition, he stated that the old worksheet numbers (shown on version #8a of the QAPP) did not need to be shown. Finally, Mr. Tucker stated that the copies of the SAP, FSP, and ESC's QAM did not need to be included in the document as it really was the Sampling analysis plan.	Lee & Ryan corrected these issues.
Ben Simes	Submittal #8a QAPP	16. Mr. Simes indicated in a telephone call that there were numberous places where the works did not have sufficient spacing to separate them.	Lee & Ryan corrected the issues.

Project Name: **Remediation of SWMU 39 TCE Plume**
Project Number: **N40083-11-D-0028 - 0001**

Declaration of Understanding

I have read and understand this Sample Analysis and Quality Assurance Project Plan and agree to abide by the procedures and limitations specified within.

Name	*Signature*	*Employer*	*Date*

TABLE OF CONTENTS

TABLE OF CONTENTS ..... **I**

List of Appendices ..... **i**

Acronyms and Abbreviations **1**

Executive Summary **4**

1.0 Introduction **5**

List of Appendices

Appendix A ..... REVISED UFP QAPP Workbook

Appendix B ..... Site Specific Field Standard Operating Procedures

Appendix C ..... ESC SOPs

Appendix D ..... Laboratory DoD ELAP Accreditation

ACRONYMS AND ABBEREVIATIONS

A – Analytical
Bio - Biological
BS – Bachelors of Science
C – Celsius
CA – Corrective Action
CAS – Chemical Abstract Service
CCC – Calibration Check Compounds
CEO – Chief Executive Officer
CHMM – Certified Hazardous Materials Manager
COC – Chain-of-Custody
COCs – Contaminants of Concern
CSP – Certified Safety Professional
CT01 – Contract Task Order Number 1
DCA – Dichloroethane
DCE – Dichloroethene or Dichloroethylene
DD – Day
DO – Dissolved Oxygen
DoD – Department of Defense
DQI – Data Quality Indicator
DUP – Duplicate
DVM – Data Validation Manager
EMAC – Environmental Multiple Award Contract
Env – Environmental
EPA – Environmental Protection Agency
ESC – ESC Lab Sciences
Etc - Et Cetera
Ext – Extension
FSP – Field Sampling Plan
g – Grams
GC - Gas Chromatograph
GPS – Global Positioning System
GW – Groundwater
H&S – Health and Safety
HCl – Hydrochloric Acid
HSM – Health and Safety Manager
ID – Identification
IDQTF – Intergovernmental Data Quality Task Force
IL – Illinois
IN – Indiana
IPT – Integrate Product Team
ISCO – In-Situ Chemical Oxidation
JBL – JBL Technical Solutions
L – Liter

LCS – Laboratory Control Sample
LCSD – Laboratory Control Sample Duplicate
L&R or Lee & Ryan – Lee & Ryan Environmental Consulting, Inc.
LEED AP – Leadership in Energy and Environmental Design Accredited Professional
LPG – Licensed Professional Geologist
MDL – Minimum Detection Limit
mg/Kg – Milligrams per Kilogram
Mgmt – Management
Mgr – Manager
mL – Milliliter
MM – Month
MS – Matrix Spike
MSD – Matrix Spike Duplicate
MSpec – Mass Spectrometer
MW – Midwest
NA – Not Applicable
NAVFAC – Naval Facilities Engineering Command
NIRIS – Naval Installation Restoration Information Solution
No – Number
NSA – Naval Support Activity
PCB - Polychlorinated Biphenyls
PCE – Perchlroethylene
PE – Professional Engineer
PID – Photo Ionization Detector
PMEB – Project Management Engineering Branch
PQO – Project Quality Objective
Proj – Project
PWD – Public Works Department
QA – Quality Assurance
QAM – Quality Assurance Manual
QAPP – Quality Assurance Project Plan
QC – Quality Control
QL – Quantitation Limit
RCRA – Resource Conservation and Recovery Act
Ret – Retired
Rev – Revision
RF – Response Factors
RFI – RCRA Facility Investigation
RFP – Request for Proposal
RPM – Remedial Project Manager
RPD – Relative Percent Difference
RSD – Relative Standard Deviation
S – Sampling
SAP – Sampling Analysis Plan
SHSO – Site Health and Safety Officer

SOP – Standard Operating Procedure
SPCC – System Performance Check Compounds
SS – Site Superintendent
Sr – Senior
SW – Solid Waste
SWMU – Solid Waste Management Unit
TBD – To Be Determined
TCA – Trichloroethane
TCE – Trichloroethene or Trichloroethylene
TDEC – Tennessee Department of Environmental Control
TN - Tennessee
UFP – Uniform Federal Policy
Ug/L – Micrograms per Liter
US – United States
US EPA – United States Environmental Protection Agency
VOC – Volatile Organic Compound
YY – Year

EXECUTIVE SUMMARY

Lee & Ryan Environmental Consulting, Inc. (Lee & Ryan) has prepared this Quality Assurance Project Plan (QAPP) which includes the Sampling and Analysis Plan(SAP) and Field Sampling Plan (FSP) requirements for the long term monitoring (LTM) of groundwater quality and remediation of a TCE contaminant plume at the U.S. Department of the Navy's (Navy) NSA Mid-South station located in Middleton, Tennessee.

Lee & Ryan prepared this QAPP for the Navy Midwest Region Naval Facilities Engineering Command (NAVFAC Midwest) under Contract No. N40083-11-D-0028, Task Order Number: 0001. The contents of the SAP address applicable Navy, U. S. Environmental Protection Agency (USEPA) Region 4, and Tennessee Department of Environment and Conservation (TDEC) - Division of Remediation requirements, regulations, guidance, and technical standards.

This QAPP outlines the organization, project management, objectives, planned activities, measurement, data acquisition, assessment, oversight, data review procedures, and reporting associated with the remedial efforts and quarterly groundwater monitoring at NSA-Mid-South. Protocols for sample collection, handling and shipping, chain-of-custody control, field measurements, laboratory analyses, data validation, and reporting are addressed in this QAPP. Copies of Lee & Ryan's Standard Operating Procedures (SOPs) for project field tasks are included in Appendix C.

The groundwater monitoring well network for LTM at NSA Mid-South includes eleven existing wells. Quarterly sampling will be performed to ensure the sampling results encompass a representative range of groundwater flow conditions. With the most recent sampling completed in the 4th quarter of 2011, future quarterly sampling events are projected for February, May, August, and November 2012.

As part of the remedial activities, Lee & Ryan personnel will be installing eight multi-screened monitoring wells/electrical resistivity sensors within the contaminant plumes. The wells are designed to characterize the vertical and horizontal extent of the chemicals of concern (COCs) so that $KMnO_4$ injections can be targeted to ensure that treatment is effective. The wells will be sampled a minimum of three times, prior to injection, approximately one to two months after injection, and potentially a third time after a second round of injections, if necessary.

Unfiltered groundwater samples will be collected from each well using the low-flow minimal-drawdown sampling method, as generally outlined in ASTM D6771-02. The portable sampling equipment will be decontaminated between each well. For each well, Lee & Ryan sampling personnel will record field measurements of the depth to the static water level and several water quality indicator parameters: pH, temperature, conductivity, Oxidation Reduction Potential (ORP), Dissolved Oxygen (DO), and turbidity. The water quality parameters will be measured using a portable water quality meter equipped with a multi-electrode flow-through cell.

Laboratory analyses of the groundwater samples from the wells will consist of the USEPA Target Analyte List (TAL) for volatile organic compounds, which encompass all of the constituents identified as COCs in the subsurface soils and groundwater. The QAPP specifies the required USEPA analytical methods and the corresponding laboratory SOPs for each analyte.

Field measurements and analytical laboratory results obtained for the groundwater samples in accordance with the QAPP and attached SAP and FSP will provide data of suitable quality regarding the total concentrations of the COCs in the groundwater. Following data verification and validation, the sampling results will be compared to the applicable Project Action Level (PAL). In compliance with by TDEC guidance, the PAL for each analyte will be either the Safe Drinking Water Act (SDWA) Maximum Contaminant Level (MCL) for the analyte, if available, or the USEPA Regional Screening Level (RSL) for tap water.

The quarterly groundwater sampling results will be presented in a Quarterly Monitoring Report (QMR) prepared for NAVFAC and submitted to the TDEC-Division of Remediation. The QMR will present the field measurements and laboratory analytical results for each well, including copies of original field data sheets and laboratory reports. The QMR also will provide a detailed interpretation and evaluation of the groundwater sampling data for each well, including quantitative analysis of time-series data for metals identified as COC that are detected at concentrations above the applicable PAL. Results of the trend analyses that indicate no discernible trend (i.e., high data variability), stable trends, or decreasing trends provide sequentially increasing technical justification to discontinue or substantially reduce groundwater sampling for LTM at NSA Mid-South.

Analytical results from the newly installed multi-level monitoring wells will be combined with the geophysical survey results to assess current conditions within the aquifer, i.e. the horizontal and vertical distribution of the COCs within the aquifer. The information will be used to determine the best approach (locations and quantities) for the injection of potassium permanganate (in-situ chemical oxidation). This information will be provided to the NAVY in a format that may be submitted to TDEC, if so desired.

1.0 Introduction

Lee & Ryan is pleased to present the following, Intergovernmental Data Quality Task Force Workbook for Uniform Federal Policy for Quality Assurance Project Plans Evaluating, Assessing, and Documenting Environmental Data Collection and Use Programs Part 2A: UFP-QAPP Workbook, for you review.

This QAPP contains the 37 worksheets as defined by the Uniform Federal Policy for Quality Assurance Project Plans as directed by NAVFAC. The plan also includes the Lee & Ryan's Field Sampling Plan (FSP), Sampling Analysis Plan (SAP), as well as SOPs and Quality Assurance Manual (QAM) for the designated Laboratory.

Lee & Ryan maintains a commitment to quality in all projects and provides for assurance in all elements of each task. The Lee & Ryan EMAC Program team is responsible for creating, implementing, maintaining and adhering to this Quality Assurance Project Plan.

1.0 Introduction

Lee & Ryan is pleased to present the following, Intergovernmental Data Quality Task Force Workbook for Uniform Federal Policy for Quality Assurance Project Plans Evaluating, Assessing, and Documenting Environmental Data Collection and Use Programs Part 2A: UFP-QAPP Workbook, for you review.

This QAPP contains the 37 worksheets as defined by the Uniform Federal Policy for Quality Assurance Project Plans as directed by NAVFAC. The plan also includes the Lee & Ryan's Field Sampling Plan (FSP), Sampling Analysis Plan (SAP), as well as SOPs and Quality Assurance Manual (QAM) for the designated Laboratory.

Lee & Ryan maintains a commitment to quality in all projects and provides for assurance in all elements of each task. The Lee & Ryan EMAC Program team is responsible for creating, implementing, maintaining and adhering to this Quality Assurance Project Plan.

APPENDIX A

UFP QAPP Workbook

Sampling Analysis Plan
Remediation of SWMU 39 TCE Plume
NSA Mid-South
Millington, TN 38054

PublicationNumbers:

EPA: EPA-505-B-04-900C
DoD: DTICADA427486

Intergovernmental Data Quality Task Force

Workbook for Uniform Federal Policy for Quality Assurance Project Plans

Evaluating, Assessing, and Documenting Environmental Data Collection and Use Programs

Part2A: UFP-QAPP Workbook

This Workbook supplements Part 1 of the UFP-QAPP, the UFP-QAPP Manual. Proper completion of these worksheets requires knowledge of the QAPP elements explained in the Manual.

Project Organizational Chart

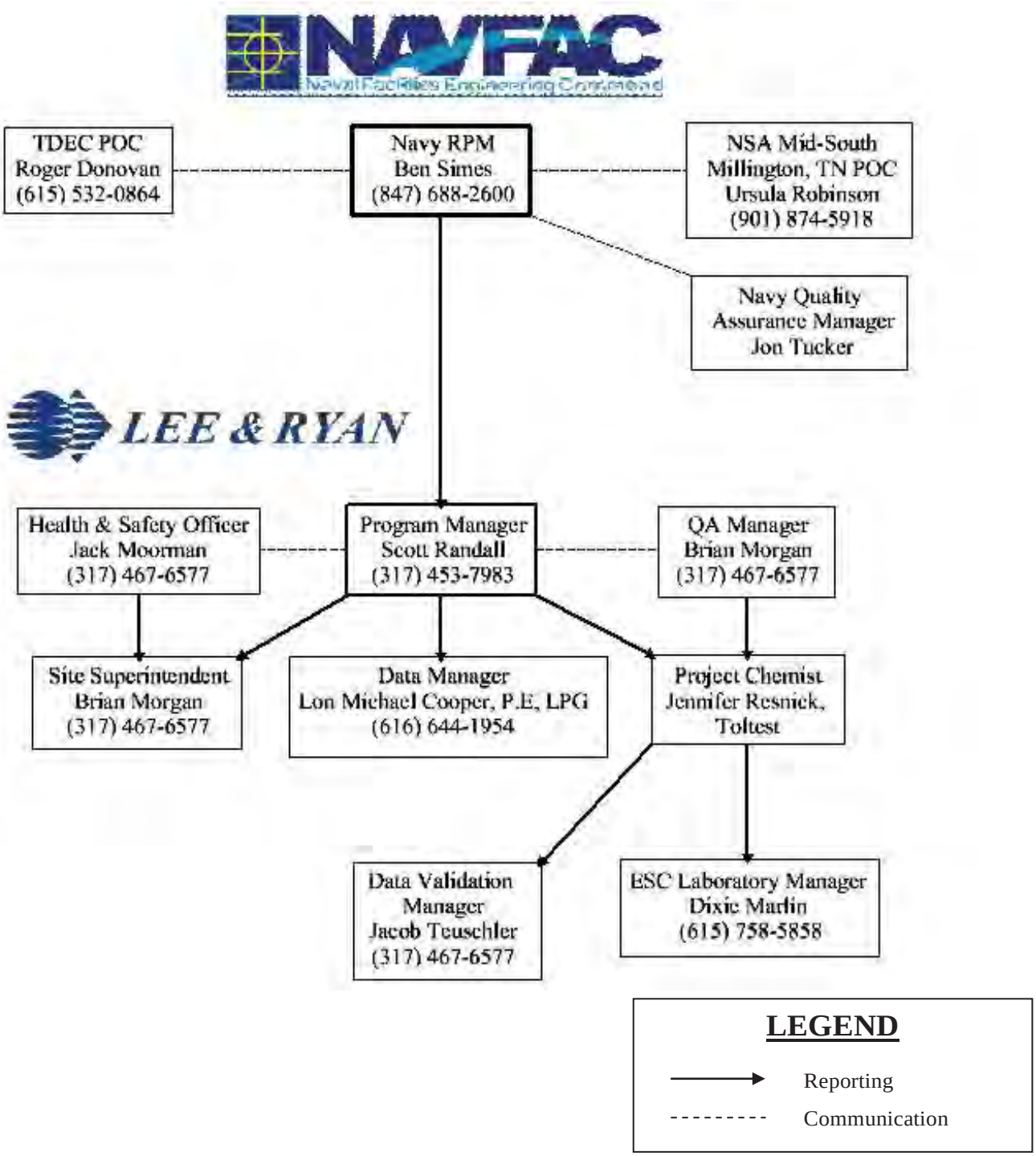

Communication Drivers	Responsible Entity	Name	Phone Number	Procedure (Timing, Pathways, etc.)
NAVFAC POC	Navy RPM	Ben Simes	(415) 828-9326	All materials and information will be forwarded to NAVFAC by Scott Randall
Regulatory Agency Interface	TDEC Navy RPM	Roger Donovan Ben Simes	(615) 532-0864 (415) 828-9326	The Navy RPM will contact the regulatory agency via phone or e-mail within 24 hours of recognizing an issue.
Gaining Site Access	L&R Proj Mgr (PM)	Angelo Dattilo	(317) 467-6577	The L&R Project Manager shall contact NSA Mid-South verbally or via e-mail a minimum of 5 days prior to commencement of field work to arrange for site access for all personnel.
Obtaining Utility Clearances	NSA Mid-South	NA	NA	TBD
Field Progress Reports	L&R Site Superintendent (SS)	Brian Morgan L&R Scientist	(317) 467-6577 (317) 467-6577	The Site Superintendent will provide all information regarding onsite activities to the L&R Project Manager on a daily basis.
Stop Work due to Safety Issues	L&R SHSO L&R SS L&R PM L&R HSM L&R Field Staff Navy RPM	John Lyttle Brian Morgan Angelo Dattilo Jack Moorman TBD Ben Simes	(910) 987-1320 (317) 467-6577 (317) 467-6577 (317) 467-6577 TBD (415) 828-9326	If L&R is the responsible party for a stop work command, the L&R SS/SHSO will inform on-site personnel, subcontractors, the NSA Mid-South SM, and the identified Project Team members within 1 hour (verbally or by e-mail). If a subcontractor is the responsible party, the Subcontractor PM must inform the L&R SS within 15 minutes, and he/she in turn will follow the procedures listed above.

QAPP Changes (including SAP/FSP) prior to Field/ Laboratory work.	L&R SHSO L&R SS L&R PM L&R HSM Navy RPM	John Lyttle Brian Morgan Angelo Dattilo Jack Moorman Ben Simes	(910) 987-1320 (317) 467-6577 (317) 467-6577 (317) 467-6577 (415) 828-9326	The L&R SS/SHSO will verbally inform the L&R PM within 24 hours of realizing a need for an amendment. The L&R PM will document the proposed changes via a Field Task Modification Request (FTMR) form within 5 days and send the Navy RPM a concurrence letter within 7 days of identifying the need for change. Proposed changes will be submitted by the L&R PM to the Navy RPM for review and approval. The L&R PM will send approved scope changes to the Project team via e-mail within 1 business day.
QAPP (including SAP/FSP) Changes in the Field	L&R SHSO L&R SS L&R PM L&R HSM Navy RPM	John Lyttle Brian Morgan Angelo Dattilo Jack Moorman Ben Simes	(910) 987-1320 (317) 467-6577 (317) 467-6577 (317) 467-6577 (415) 828-9326	The L&R SS/SHSO will verbally inform the L&R PM on the day the issue is discovered. The L&R PM will inform the Navy RPM within 1 business day of discovery. The Navy RPM will issue a scope change (verbally or via e-mail), if warranted. The scope change is to be implemented before further work is executed. The L&R PM will document the change via an FTMR form within 2 days of indentifying the need for change and will obtain the required approvals within 5 days of intiating the form.
Release of Analytical Data	L&R QAM	Brian Morgan	(317) 467-6577	The L&R QCM will validate all analytical data before it is released.

Field Corrective Actions	L&R PM L&R QAM Navy RPM	Angelo Dattilo Brian Morgan Ben Simes	(317) 467-6577 (317) 467-6577 (415) 828-9326	The L&R QAM will notify the L&R PM verbally or by e-mail within one business day that the corrective action has been completed. The L&R PM will then notify the Navy RPM (verbally or by e-mail) within 1 business day.
Analytical Corrective Actions	Laboratory PM Lee & Ryan DVM Lee & Ryan PM Navy RPM	Dixie Marlin Jeff Walker Toby Harrison Ben Simes	(800) 767-5859 (865) 692-1959 (847) 688-2600x 320 (415) 828-9326	The designated Laboratory PM for ESC Lab sciences inc. of Mt. Juliet, Tennessee will notify (verbally or via e-mail) the L&R QAM within one business day when an issue related to laboratory data is discovered. The L&R QAM will notify (verbally or via e-mail) the L&R PM within 1 business day. The L&R QAM notifies the L&R PM verbally or via e-mail within 48 hrs of validation completion that a non-routine and significant laboratory quality deficiency has been detected that could affect this project and/or other projects. The L&R PM verbally advises the Navy RPM within 24 hours of notification from the L&R QAM. The Navy RPM takes corrective action that is appropriate for the identified deficiency. Examples of significant laboratory deficiencies include data reported that has a corresponding failed tune or initial calibration verification. Corrective actions may include a consult with the Navy Chemist.

Project Name: EMAC Seed Project CT01 – SWMU 39 Projected Date(s) of Sampling: Multiple Project Manager: Angelo Dattilo	Site Name: SWMU 39 Site Location: Millington, Tennessee

Date of Session: October 13, 2011
Scoping Session Purpose: Project Kick-Off Meeting

Name	Title	Affiliation	Phone#	E-mailAddress	Project Role
Ben Simes	NAVFAC MW IPT	NAVFAC MW IPT	415-828-9326	Benjamin.Simes@Navy.Mil	COTR
Chris Mischel	Engineer	JBL Tech. Solutions	859-948-3256	CMischel@JBLTechnical.com	Engineer
Scott Randall	Program Mgr.	Lee & Ryan	317-467-6577	SRandall@LeeandRyan.com	Program Mgr.
Angelo Dattilo	Project Mgr.	Lee & Ryan	317-467-6577	ADattilo@LeeandRyan.com	Project Mgr.
Brandi Smith	Procurement & Proposal Mgr.	Lee & Ryan	317-467-6577	BSmith@LeeandRyan.com	NA
Lee Carolan	Sr. Project Scientist	JBL Tech. Solutions	859-421-5060	LCarolan@JBLTechnical.com	Sr. Proj. Scientist
Amy Franks	NAVFAC MW IPT	NAVFAC MW IPT	NA	Amy.Franks@Navy.Mil	NA
Ruth Godbolt	NAVFAC MW IPT	NAVFAC MW IPT	847-688-2600	Lillie.Godbolt@Navy.Mil	Contract Specialist
Tom Knueven	Sr. Director of Env. Services	Lee & Ryan	317-467-6577	TKnueven@LeeandRyan.com	NA
Randy Schneider	NAFAC	NAFAC	901-553-8594	Randall.Schneider@Navy.Mil	NA
Shannon Wonders	Project Controller	TolTest	812-709-1031	Shannon.Wonders@TolTest.com	NA
John Lyttle	Site H&S Officer	TolTest	910-987-1320	John.Lyttle@TolTest.com	Site H&S Officer
Rob Williamson	NAVFAC, PWD, Env.	NAVFAC, PWD, Env.	901-874-5399	Rob.Williamson@Navy.Mil	NA
Keith Centner	NAVFAC, PWD, PMEB	NAVFAC, PWD, PMEB	901-553-8085	Keith.Centner@Navy.Mil	NA
Ursula Robinson	NAVFAC, PWD, Env.	DWIS, Environmental	901-874-5918	Ursula.Robinson@Navy.Mil	Env. Coord, NSA Mid-South

Comments/Decisions: Ruth Godbolt discussed specific issues related to the EMAC contract: Responsibilities, Insurance requirements, bonding, and WWAF Invoicing. Ben Sime, the COTR, and Ursula Robinson, the Environmental Coordinator for Millington discussed base access requirements (Rapid Gate), ECATTs Training, program deliverables, project deliverables and site history (regulatory background). Lee & Ryan discussed general project tasks, and scheduling.

Action Items: Program Deliverables: APP, QM including CDQMP due to Ben Simes within 30 days (10/27/11). Project Deliverables: Work Plan including EPP and ECP, HSP, QAPP including SAP and FSP, CQCP due to Ben Simes within 60 days (11/27/11).

Consensus Decisions: Not applicable at this time.

The following discussion summarizes a number of reports related to the investigation and remedial actions taken at SWMU 39, NSA Mid-South and provides the Conceptual Site Model (CSM), including:

- Site Description
- Summary of Site Environmental Investigation/Remediation
- Regulatory Driver for Remediation
- Project Description
- Remedial Activities
- Project Decisions

The CSM discussion concludes with a list or reports referenced for the additional technical information and details.

Site Description

The Site, SWMU 39, is located at the NSA Mid-South facility approximately 150 feet east of Kearsarge Avenue, across from the boiler plant located on the south side of NSA Mid-South (Figures 1). SWMU 39 consists of the area surrounding the concrete slab remaining from Building S-74 and Building S-212 (Figure 2). Building S-74 was built in 1943 and operated as a laundry until 1981 (38 years). Transformers and drums of oil were stored in the PCB storage area located on a concrete slab (an outdoor concrete slab), until the building was demolished in 1995. All that remains is a concrete slab and foundation. Building S-212 was constructed in 1947 to store solvent for Building S-74.

Summary of Site Environmental Investigation/Remediation

As part of the U.S. Navy Installation Restoration Program, a RCRA Facility Investigation (RFI) was conducted in 1998 and 1999 that identified chlorinated solvents, perchloroethylene (PERC) and trichloroethylene (TCE) in the fluvial soil deposits and groundwater beneath the existing slab at concentrations exceeding RCRA action levels. Subsequent investigations defined a groundwater contaminant plume in the vicinity of the building. In 2005, EnSafe, under contract to the Navy, began to treat the chlorinated solvents using enhanced bio-remediation. Although the concentrations have dropped, they still do not meet the required cleanup levels (See Figure 3).

Regulatory Framework

The remedial action for groundwater and soil is being performed under the federal Resource Conservation and Recovery Act (RCRA) of 1976, and the federal Safe Drinking Water Act (SDWA) of 1974.

The performance objective of this project is to remediate the contaminants of concern (COCs) in groundwater and soil to levels defined by the federal statutes above so the Site can be closed without controls or restrictions for future land use. The cleanup goals for these groundwater COCs will be the SDWA MCL's. The action levels for the COCs in each media are defined below.

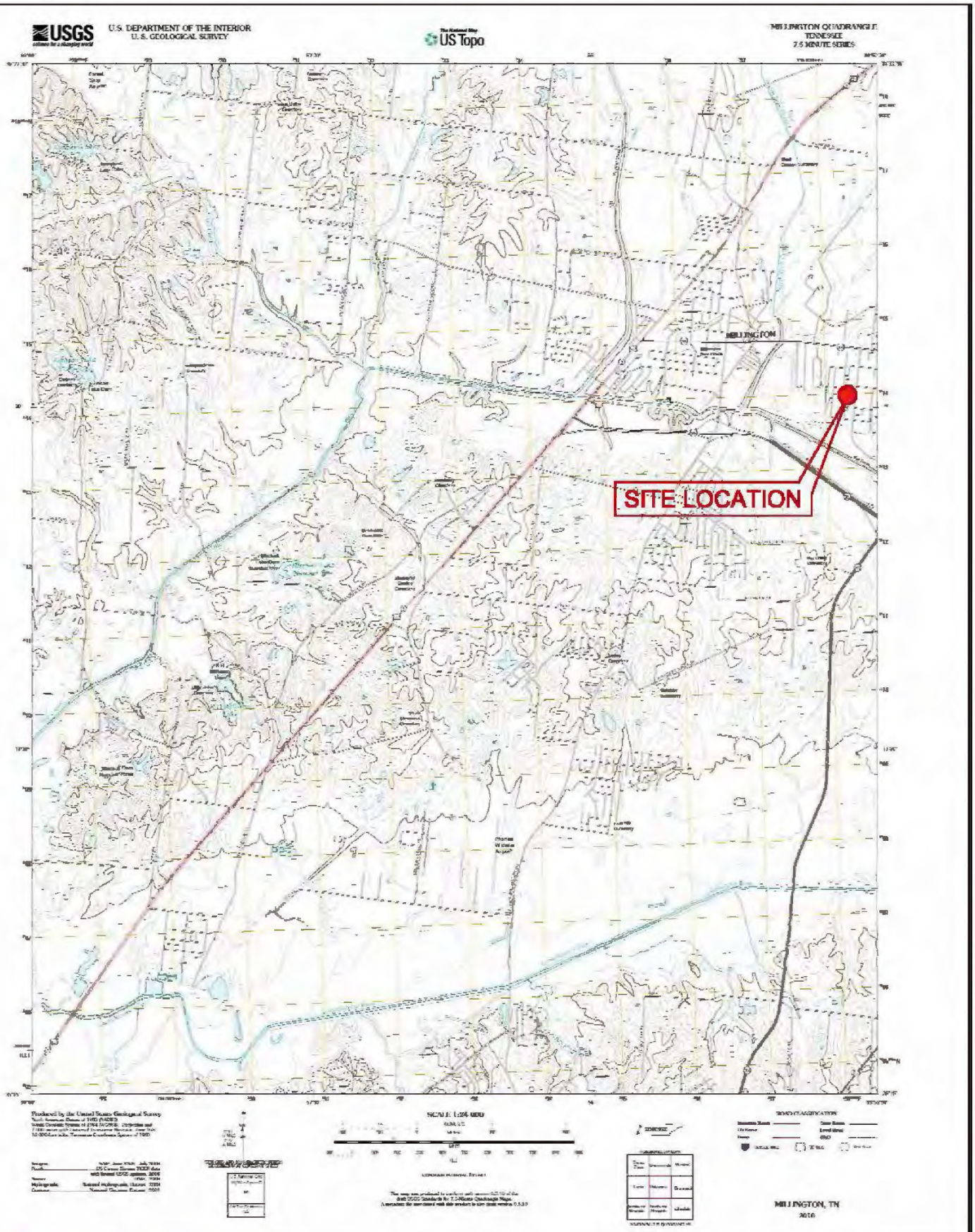

LEE & RYAN
ENVIRONMENTAL •CONSTRUCTION •ENGINEERING

Scale : Not To Scale

Site Vicinity Map
SWMU 39
NSA Mid-South
Millington, TN

Date: 10/25/11

Project # 11259

Figure 1

M:\Projects\2011 Projects\Environmental\11259 - EMAC Remediation of TCE Plume - Millington, TN\DWG\11259 - Fig. 1 - Vicinity Map.dwg, 11/16/2011 4:14:20 PM, Adobe PDF.pc3

LEGEND	Symbols and Abbreviations:	LEE & RYAN ENVIRONMENTAL •CONSTRUCTION •ENGINEERING	SWMU 39 Site Location Map	SWMU 39 NSA Mid-South Millington, TN	**Figure 2**
Drawn By: CW					
Checked By: LC					
Date Drawn: 11/22/11 — Revised: -				Scale : 1" = 100'	Project # 11259

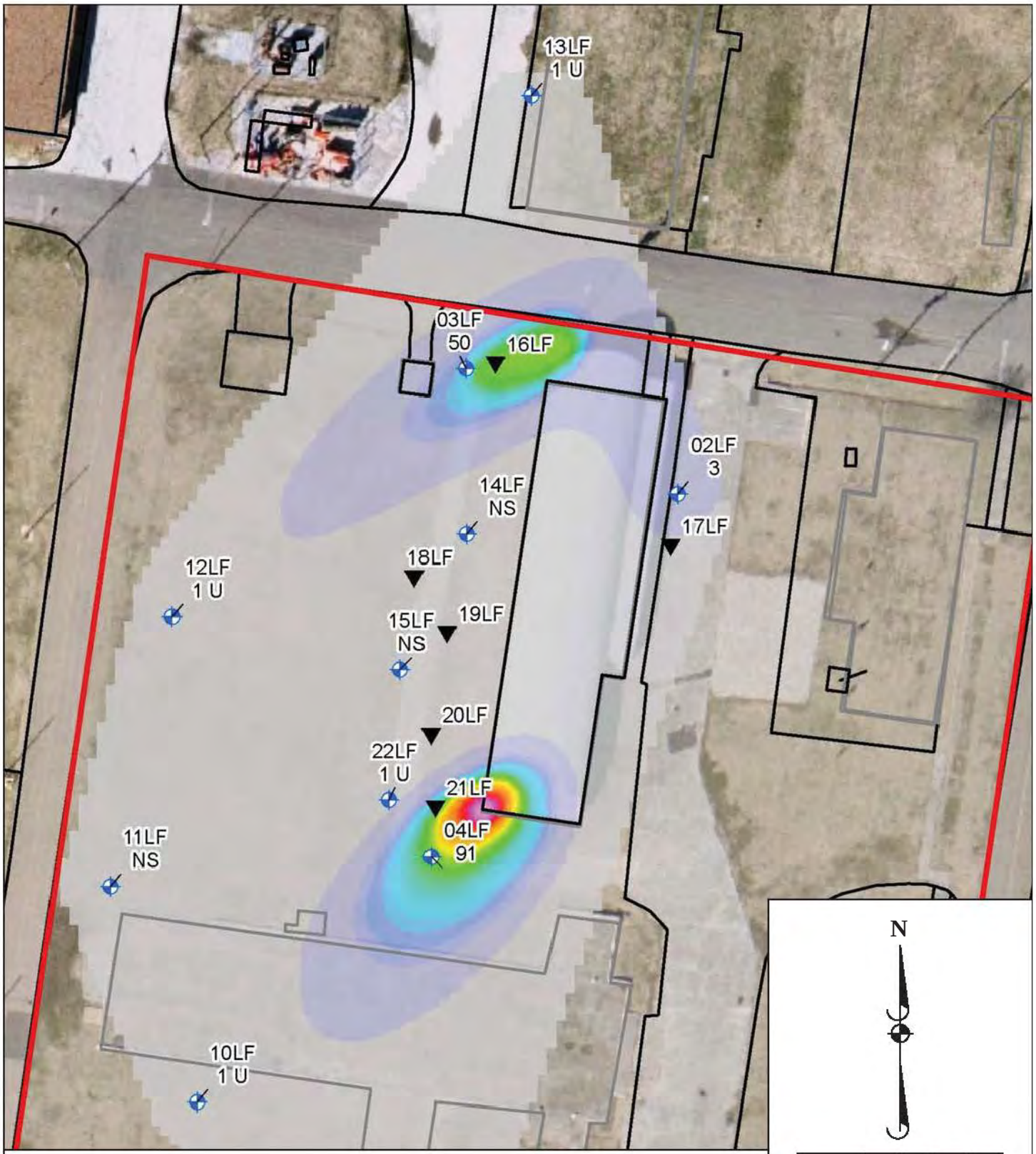

Legend

▼ = Injection Well ⌖ = Monitoring Well

LEE & RYAN ENVIRONMENTAL • CONSTRUCTION • ENGINEERING	LEGEND		Existing Injection Wells
	Project # 11259		
SWMU 39 NSA Mid-South Millington, TN	Drawn By: CW	Checked By: LC	
	Date Drawn: 1/17/12	Revised: -	**Figure 3**

M:\Projects\2011 Projects\Environmental\11259 - EMAC Remediation of TCE Plume - Millington, TN\DWG\2012-1-17\11259 - Fig.3 - existing injection wells.dwg, 1/17/2012 4:28:55 PM, DWG To PDF.pc3

Groundwater

The COCs in groundwater to be remediated are trichloroethylene (TCE), and the breakdown products, cis-1,2-dichloroethane (cis-1,2-DCE), and vinyl chloride (VC). The COCs and associated MCL's are listed as follows:

- TCE - 5.0 micrograms per liter (µg/L)
- cis-1,2-DCE - 70 µg/L
- Vinyl Chloride - 2.0 µg/L

Groundwater and soil samples will be analyzed for chlorinated solvents using EPA method 8260B in accordance with previous investigations.

Soil

Soil sampling and characterization will not be conducted as part of the scope of this WP during the groundwater remediation and closure process. However, soil samples will be collected from the concrete pad at a localized area underlying a section of the pad as defined by EnSafe, Inc. during a sampling event conducted on October 4-5, 2010. The soil samples will be analyzed for chlorinated solvents using EPA method 8260B in accordance with previous investigations.

Project Description

Lee & Ryan was retained to remediate the site, in such a manner, that the cleanup criteria are met by 2014. After evaluating the data provided in the Navy's RFP, and discussing the information with Ensafe, the former contractor; Lee & Ryan decided to use in-situ chemical oxidation (ISCO) to address the remaining groundwater contamination and to excavate the impacted soils underlying the former storage pad (Building S-74). Prior to the first injection, Lee & Ryan will perform an aquifer assessment to characterize current site conditions. The assessment will use a combination of vertical profiling (chemical analyses) and geophysics (3-dimensional electrical resistivity) to characterize the spatial distribution of the contaminants of concern (COCs) within the aquifer. Once the data has been analyzed, a solution of potassium permanganate will be injected into the aquifer to oxidize the COCs. The locations (vertically and horizontally), concentrations, and volumes of material to be injected will be based on the results of the aquifer assessment. Additional injections may be performed as required.

In addition, there is a small amount (less than 10 cubic yards of contaminated soils underneath the concrete pad. Lee & Ryan will oversee the removal of the concrete pad and contaminated soils. The soils will be transported to the appropriate facility for disposal.

Remedial Activities

The remedial actions for SWMU 39 will include the following primary tasks:

- Aquifer Assessment consisting of two tasks: vertical profiling and a geophysical survey
- Groundwater Treatment using In-Situ Chemical Oxidation.
- Quarterly Groundwater Monitoring.
- Concrete Pad Removal and Disposal, Building S-74.
- Excavation and Disposal of Impacted Soils.

A description of each activity follows.

Aquifer Assessment

Eight borings will be advanced to the bottom of the aquifer, a confining, laterally continuous clay unit, located approximately 100 feet below grade. The clay unit surface represents the contact between the bottom of the Cockfield Formation and the top of the Cook Mountain Formation. The borings will be advanced using a rotary drill rig. Five borings will be advanced in the southern plume located in the vicinity of the southwest corner of Building S-212 and three borings will be advanced in the northern plume (See Figure 4). Since the geology of the aquifer is well known, Lee & Ryan does not plan on collecting any additional soil samples.

After achieving the desired depths, each boring will be converted to a monitoring well constructed of 2-inch diameter PVC well screen and casing. Within the saturated zone, each 10-foot section of PVC piping will have a 2-foot long, 10-mil slotted PVC well screen to allow discrete vertical profiling of the aquifer and a ¼-inch band of stainless steel which will act as an electrode for the electrical resistivity survey. Based on the previous investigations, the top of the saturated zone is located approximately 40 feet bgs at the top of the saturated Cockfield Formation. Clean silica sand will be emplaced in the annulus around the well screen to a height two to three feet above the top of the uppermost screen. A minimal 2-foot layer of bentonite pellets will be placed above the sand pack, and the remainder of the borehole will be backfilled with a bentonitic grout. See **Figure 5** for a schematic of a typical electrical resistivity sensor well.

Upon completion, the wells will be developed using surging and pumping. Approximately 24 hours after development, the wells will be sampled using the ASTM D 6771-02 low-flow sampling methodology. A bladder sampling pump equipped with packers will be set to straddle the upper-most screen, sealing it off from the rest of the well. The field parameters pH, temperature, specific conductivity, ORP, DO, and turbidity will be measured as water is purged from the well. Once stabilized, a groundwater sample will be collected, preserved as required, stored on ice, and then transported to the laboratory for analysis. Upon completion, the sampling pump will be cleaned and then set to collect a sample from the next lower screen. This process will be repeated until all 48 of the screened intervals have been sampled.

After the wells have been sampled, a 3-Dimensional Electrical Resistivity Survey will be conducted. The information generated from the geophysical survey and vertical groundwater profiling will be used to:

- Determine the spatial distribution of the contaminants within the aquifer and
- Design the in-situ chemical oxidation treatment, i.e. location, volume, and depths of chemical injection.

In-Situ Chemical Oxidation

Two plumes of impacted groundwater have been identified, a south plume located at the southwest cornerof building 212 and a northern plume located west of the northwest corner of building 212 (See Figure 4). The two plumes will be treated using in-situ chemical oxidation. Vironex, a sub-contractor will injectapproximately 18,300 gallons of a 1% solution of potassium permanganate ($KMnO_4$) into the aquifer. The exact locations, depths, and volumes will be determined based on the results of the aquifer assessment. Currently, Lee & Ryan anticipates that Vironex will inject the $KMnO_4$ into two existing injection wells 16LF and 2ILF (see **Figure 4**) and into two new borings to be advanced as current conditions require.

Aquifer Assessment (Part 2)

Geophysical data will be collected as the potassium permanganate is injected in the aquifer. The information will be used to assess the distribution of the oxidant in the aquifer and evaluate its potential

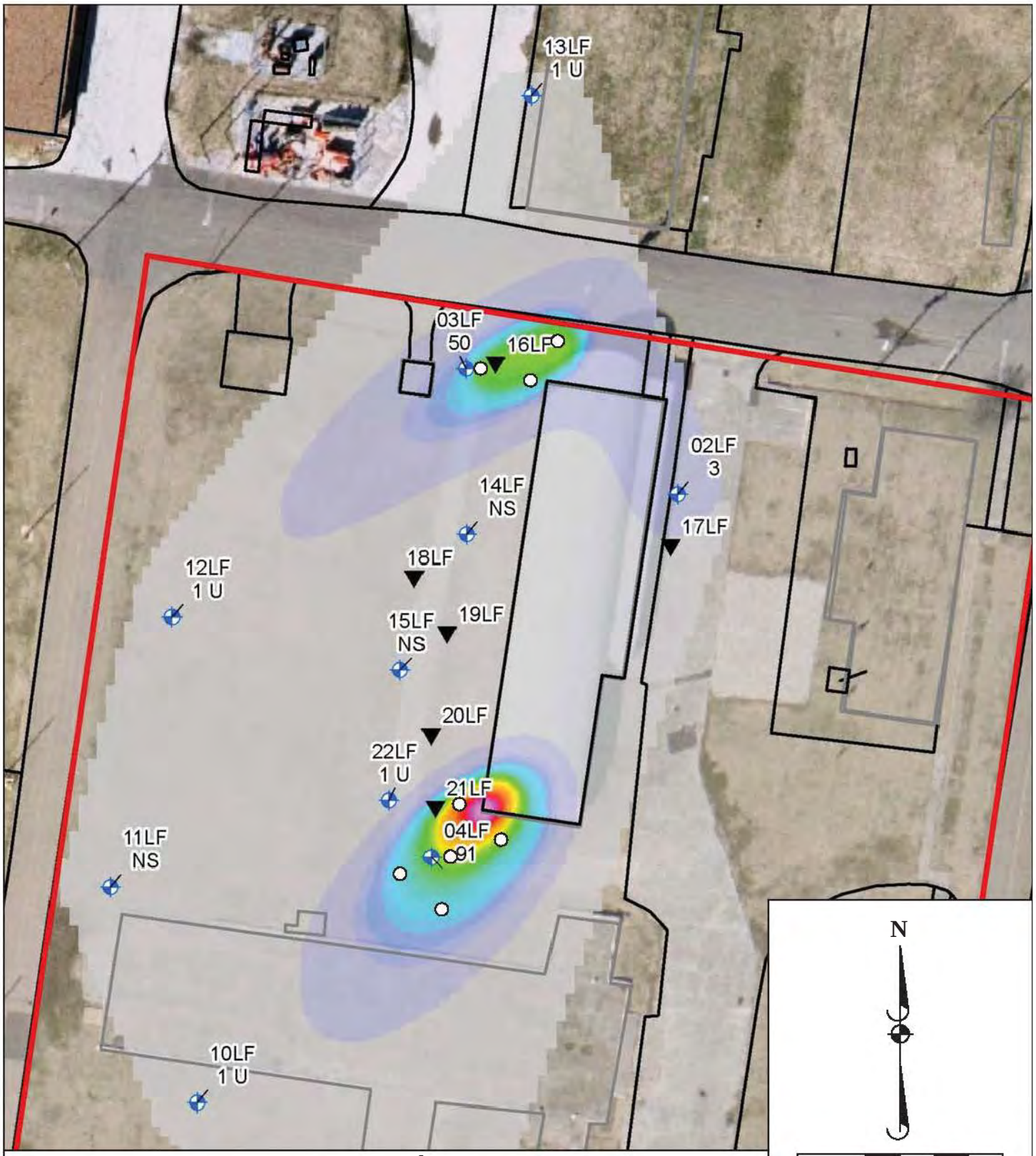

Legend

○ = Assessment Well ▼ = Injection Well ⌖ = Monitoring Well

LEE & RYAN
ENVIRONMENTAL • CONSTRUCTION • ENGINEERING

SWMU 39
NSA Mid-South
Millington, TN

LEGEND

Project # 11259

Drawn By: CW

Checked By: LC

Date Drawn: 1/17/12

Revised: -

Proposed Sampling Locations

Figure 4

M:\Projects\2011 Projects\Environmental\11259 - EMAC Remediation of TCE Plume - Millington, TN\DWG\2012-1-17\11259 - Fig.4 - Proposed Sampling Locations.dwg, 1/17/2012 4:38:43 PM, DWG To PDF.pc3

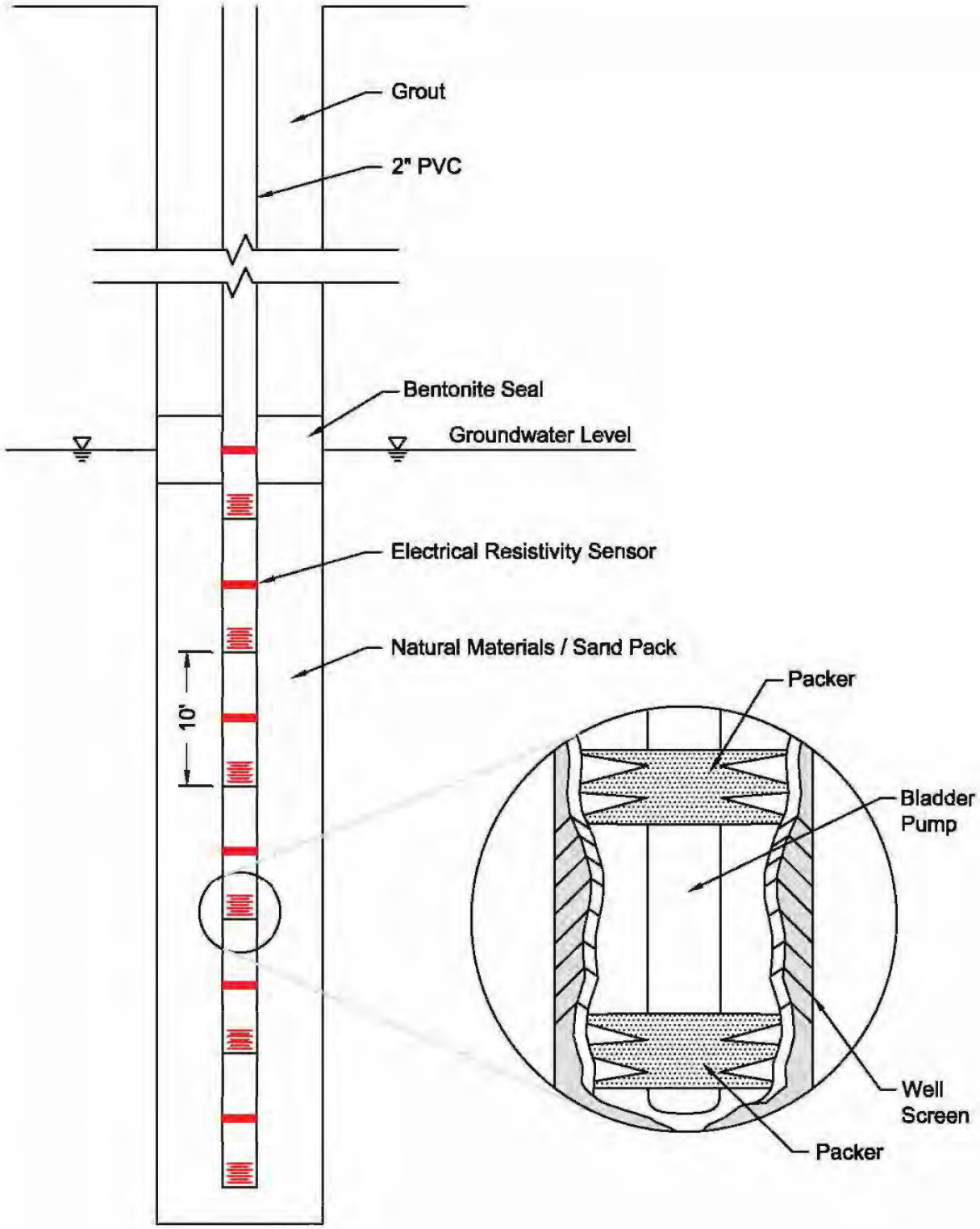

Scale: Not To Scale

LEE & RYAN ENVIRONMENTAL •CONSTRUCTION •ENGINEERING	Project # 11259		Typical Assessment / Electrical Resistivity Sensor Well
SWMU 39 NSA Mid-South Millington, TN	Drawn By: CW	Checked By: LC	
	Date Drawn: 1/17/12	Revised: -	**Figure 5**

M:\Projects\2011 Projects\Environmental\11259 - EMAC Remediation of TCE Plume - Millington, TN\DWG\2012-1-17\11259 - Fig.5 - Resistivity Sensor Well.dwg, 1/17/2012 4:40:10 PM, Adobe PDF

effectiveness in remediating the chemicals of concern.

Quarterly Groundwater Monitoring and Reporting

Lee & Ryan will conduct up to 12 quarterly sampling events of the groundwater monitoring network; the number of events will depend on the analytical results. Eleven groundwater monitoring wells comprise the network for SWMU 39; however, only seven will be sampled on a quarterly basis, as required by the contract. The seven monitoring wells (See Figure 4) to be sampled are:

1. 039G02LF
2. 039G03LF
3. 039G04LF
4. 039G10LF
5. 039G12LF
6. 039G13LF
7. 039G22LF

Historical groundwater analytical data indicates that chlorinated VOCs have consistently been observed in monitoring wells 039G03LF, 039G04LF, and 039G22LF. Accordingly, these wells will be sampled last to minimize the potential for cross contamination.

The wells will be sampled using the ASTM D 6771-02 low-flow sampling methodology. As we understand it, previous consultants have collected the groundwater samples from the mid-point of each well's saturated thickness. Accordingly, Lee & Ryan personnel will measure water levels and total well depths in each well and the midpoint of the saturated thickness will be determined. The sampling team will set the bladder pump to straddle the mid-point and field parameters pH, temperature, specific conductivity, ORP, DO, and turbidity will be measured as water is purged from the well. Once the field parameters stabilize, a groundwater sample will be collected, preserved as required, stored on ice, and then transported to the laboratory for analysis. The sampling pump will be cleaned between each well.

Following each quarterly sampling event, a quarterly report will be submitted to the NAVFAC Project Manager, and an annual Interim Measures Progress Report will be submitted each year summarizing the quarterly sampling events.

Aquifer Assessment (Part 3)

After one to two quarters of groundwater monitoring, Lee & Ryan personnel will collect a third round of geophysical data, and a second round of vertical profile samples to evaluate the in-situ chemical oxidations effectiveness in treating the contaminants of concern. Depending on the results, Lee & Ryan may perform a second round of injections (ISCO) to address any remaining contaminants. The decision to inject will be based on:

- The presence of any "hot spots" within the aquifer.
- The COCs reported concentrations in the groundwater monitoring wells as it relates to the rate of reduction due to treatment.

Concrete Pad and Contaminated Soil Removal

Building S-74 was constructed in 1943 and operated as NSA Mid-South's dry cleaning facility until operations ceased in 1981. Building S-74 was demolished in 1995 but the building slab was left in-place. A previous investigation identified contaminated soils underneath a portion of the concrete pad (Boring

039SHA20) at depths rangingfrom 0.5 to 1.0, and 3.0 to 3.5 feet BGS.1,2,4-trimethylbenzene and ethylbenzene were reported at concentrations that exceeded the EPA's Regional Screening Levels (RSLs) for Residential Soil. In addition, 1,1,2-trichloroethane, benzene, ethylbenzene, tetrachloroethylene (PCE), toluene, trichloroethylene (TCE), and total xylenes were reported at concentrations above the respective Maximum Contaminant Level for Soil to Groundwater RSLs.

The concrete pad measures approximately 16,426 square feet in area, two feet thick, and the perimeter is approximately 778 feet in length. The concrete will be broken up using an excavator with a jackhammer attachment. An end-loader will be used to transfer and load the concrete into the tri-axle trucks. The concrete will be transported to the BFI North Shelby Landfill.

Once uncovered, the contaminated soils will be excavated and transported to the appropriate facility for disposal.Lee & Ryan will excavate an area measuring approximately 20 square feet and 5-foot deep. The impacted soils (approximately 4.6 cubic yards) will be excavated, transported, and disposed of at the BFI North Shelby Landfill. Confirmatory samples will be taken upon completion of excavation activities to verify cleanup. Based on the size of the excavation, two bottom samples and one sidewall sample from each side of the excavation will be collected using Encore samplers. The samples will be analyzed for VOCs using EPA Method 5035/8260B. If the confirmatory sampling results for any VOC are above the U.S. EPA RSLs for Residential Soil for closure, additional excavation, removal, and confirmatory sampling will be repeated.

Once the soil excavation and concrete is removed, imported soil will be used to backfill the excavation. The soils will be placed in 12-inch lifts. Each lift will be compacted to 95% of Proctor. Once the excavation reaches the correct elevations, approximately 2-inches of topsoil mixture will be applied to the site and a grass seed mixture applied. Straw matting or similar product will be applied to prevent erosion and provide protection while the new cover establishes itself.

The imported soil and topsoil will be analytically tested prior to delivery. The imported soil will be tested for total petroleum hydrocarbon (TPH) gasoline range organics (GRO), and TPH diesel range organics (DRO), using Method by SW-846 method 8015; and the toxicity characteristic leaching procedure (TCLP) for the eight RCRA metals using U.S. EPA Methods 6010B, 7470-7471, VOCs using U.S. EPA Method 8260, and semi-volatile organic compounds (SVOCs) using U.S. EPA Method 8270.

Reference Technical Reports

Ensafe, Allen & Hoshell	1996 Confirmatory Sampling Investigation, Solid Waste Management Units (SWMU) 20, 22 and 63, 30, and 39, Naval Support Activity (NSA) Mid-South, Millington, Tennessee, Revision 1.
Ensafe	1998 Confirmatory Sampling Investigation Report, Assembly F, SWMUs 20, 22/63, 30 and 39, NSA Mid-South, Millington, Tennessee, Revision 2.
Ensafe	1999 RCRA Facility Investigation Work Plan, Assembly F, SWMUs 20, 22, and 39, NSA Mid-South, Millington, Tennessee, Revision 2.
Ensafe	2000 RCRA Facility Investigation Report, Assembly F, SWMU 17,19, 20, 22, 39 and 63, NSA Mid-South, Millington, Tennessee, Revision 0.
Ensafe	2000 Technical Memorandum: SWMUs 39 and 14/46 Investigation Work Plan, NSA Mid-South, Millington, Tennessee. Revision 0.
Ensafe	2001 Corrective Measures Study Work Plan, SWMU 39, Soil and Groundwater, NSA Mid-South, Millington, Tennessee. Revision 0.

Ensafe	2001 Monitored Natural Attenuation Treatability Study Work Plan, NSA Mid-South, SWMU 39 – Building S-74, Revision 0.
Ensafe	2003 Corrective Measures Study Report, SWMU 39, NSA Mid-South, Millington, Tennessee. Revision 2.
Ensafe	2004 Interim Measures Work Plan, SWMU 39, NSA Mid-South, Millington, Tennessee, Revision 0.
Ensafe	2005 Interim Measures Progress Report, NSA Mid-South, SWMU 39, Millington, Tennessee, Revision 1.
Ensafe, Spectra Tech	2009 Interim Measures Progress Report, SWMU 39, NSA Mid-South, Millington, Tennessee, Revision 1.
Ensafe, Spectra Tech	2010 Interim Measures Progress Report, SWMU 39, NSA Mid-South, Millington, Tennessee, Revision 1.
Ensafe	2010 Technical Memorandum: VOC Detections Associated with the Existing Building Slab at NSA Mid-South SWMU 39, Millington, Tennessee. Revision 0.

The following discussion outlines site-specific Data Quality Objectives (DQO)/Systematic Planning Process (SSP) applied to the groundwater soil sampling for the aquifer assessment, groundwater monitoring and remedial activities at SWMU 39, NSA Mid-South, including brief descriptions of the DOQ/SSP elements listed below:

- Problem Statement,
- Data Needs,
- Study Boundaries,
- Analytic Approach,
- Performance Criteria, and
- Decision Rules.

Problem Statement

Previous RCRA remedial action at SWMU 39, NSA Mid-South, has effectively reduced the environmental contamination resulting from historical dry cleaning operations at the site; however, as of the last quarterly sampling event, the cleanup criteria have not been met. As part of the agreement with the Tennessee Department of Environmental Control (TDEC), the Navy must achieve the groundwater MCLs before the site can be closed. Lee & Ryan intend to implement a new remedial strategy to achieve the required cleanup standards within the next four years. These include remediation of the impacted groundwater using In-situ Chemical Oxidation, excavation of the impacted soils, and quarterly sampling of the groundwater monitoring network to evaluate the effectiveness of the treatment. Implementation of this QAPP, the attached FSP and SAP and the related work plan is expected to generate the data needed to assess current site conditions, evaluate the effectiveness of treatment, and demonstrate that the remedial activities have achieved the required cleanup criteria.

Groundwater sampling for both the aquifer assessment and quarterly monitoring at SWMU 39, NSA Mid-South targets the chlorinated volatile organic compounds identified as the COCs during the RCRA investigation. In addition, impacted soils beneath the concrete pad of former building S 74 have been reported to contain the same COCs at concentrations in excess of the RCRA cleanup criteria. Review of the historical groundwater sampling data suggests that the current remedial activity, reductive dechlorination, is reducing the concentrations of the primary contaminant, TCE, but is showing an increase in vinyl chloride concentrations. Assuming continued implementation of the current remedial system, there is little likelihood that the required cleanup criteria will be met within the next three to four years.

This QAPP, attached FSP and SAP and accompanying work plan defines the requirements for determining the current spatial distribution of the COCs, determining the exact volumes and locations for in-situ chemical oxidation treatment, evaluating the effectiveness of treatment, and monitoring to ensure that the cleanup criteria have been met.

Data Needs

Groundwater sampling performed for the aquifer assessment and quarterly monitoring at SWMU 39, NSA Mid-South and in accordance with requirements specified in the attached SAP will provide suitable quality data

regarding (1) the depths (below ground surface) and elevations of the saturated zone (water table), (2) groundwater flow directions in the uppermost aquifer in the monitored areas, (3) the spatial distribution of the COCs within the aquifer, and (4) the effectiveness of remedial treatment.

Soil sampling performed during the excavation of impacted soils from underneath the concrete pad belonging to former Building S 74 and in accordance with the requirements specified in the attached SAP will provide suitable quality data to ensure the impacted soils have been removed from the site.

Study Boundaries

Groundwater monitoring at SWMU 39 at NSA Mid-South includes a seven wells: as specified in the contract (039G02LF, 039G03LF, 039G04LF, 039G10LF, 039G12LF, 039G13LF, and 039G22LF). In addition, groundwater samples will be collected from eight temporary monitoring wells installed during the aquifer assessment to vertically profile the aquifer. No other groundwater sampling locations are recommended in the attached SAP. All of the wells are located in the immediate vicinity of two buildings, former building S 74 and Building 212, where a RCRA investigation identified the presence of chlorinated solvent contamination in the subsurface soils and groundwater. Monitoring data obtained from all of the wells to date do not indicate the subsurface migration or groundwater transport of COCs into off-site areas located hydraulically downgradient of the SWMU 39 property boundaries.

Analytic Approach

Field measurements and laboratory analytes associated with groundwater monitoring at SWMU 39, NSA Mid-South collected in accordance with the attached SAP will provide data regarding representative total concentrations of the VOCs identified as COCs in the groundwater. Laboratory analytes associated with the contaminated soils underlying the concrete pad remaining from former building S 74 will provide data to verify the effectiveness of excavation in removing the impacted soils from the site.

Laboratory analyses will be performed per the sample details summarized in Table 8.2 and the analytical methods and laboratory SOPs listed in Worksheet No. 10 – Analytical SOP References Table.

Performance Criteria

Collection of representative unfiltered, non-turbid groundwater samples from each applicable well is a primary performance goal for the aquifer assessment and quarterly monitoring program at SWMU 39, NSA Mid-South. Non-turbid samples are least likely to yield biased laboratory analyses for VOCs because of excessive suspended material in the samples and volatilization during sample collection. Accordingly, careful implementation of the low-flow minimal drawdown sampling method described in ASTM D 6771-02 will ensure collection of representative non-turbid samples from each well. Field measurements of turbidity will be used to gauge compliance with the performance goal and to qualify suspect results as warranted.

Performance criteria for evaluation of the quarterly groundwater sampling results reported for the wells located down-gradient of the two groundwater contaminant plumes at SWMU 39, NSA Mid-South include: (1) ambient concentrations indicated by groundwater sampling results for the designated upgradient/background well (MW3-7) and (2) the applicable PAL listed in Worksheet No. 9 – Reference Limits and Evaluation Tables.

Soil samples collected from the the sidewalls and bottom of the excavation will be used to determine if any impacted soils remain after excavation. The samples will be collected using an Encore sampler to prevent the volatilization of the COCs prior to analysis. Pefromance criteria for the evaluation of the soil samples include the applicable PAL listed in Worksheet No. 9 – Reference Limits and Evaluation Tables.

Decision Rules

A quantitative analysis of time-series plots will be performed for the monitoring wells at SWMU 39, NSA Mid-South. The results of the trend analyses will be used to determine if the clean up criteria will be met in the required time frame as specified in Lee & Ryan's contract with the Navy. If it appears that the criteria cannot be met, a second round of in-situ chemical oxidation (potassium permanganate solution) will be performed. Conversely, if it appears that the criteria will be met, then a second round of in-situ chemical oxidation will not be performed, and quarterly monitoring will continue until the cleanup criteria have been met for four continuous quarters as required by TDEC.

Soil samples collected from the sidewalls and bottom of the excavation that exceed the site cleanup criteria are indicative that additional soil excavation must be performed. Lee & Ryan personnel will remove one additional foot of soil from those areas reported to contain the contaminants of concern at concentrations exceeding the site cleanup criteria for transport and disposal. Once the contaminated soils have been removed, additional soil samples will be collected until the analytical results indicate that all of the impacted soils have been removed.

Measurement Performance Criteria Table

Matrix	Sampling Procedure[1]	Analytical Method/SOP[2]	Analytical Group	Frequency	Data Quality Indicators (DQIs)	Measurement Performance Criteria
Water	Low-flow	330752/330363	VOCs	1 Field Duplicate for every 10 Samples. 1 Field MSDS sample for every 20 samples. 1 Trip Blank for every shipping container.	Precision Precision Accuracy/Bias Bias	RPD between duplicate samples should be ≤ 20% if both results are > 5x LOQ. Same as above. ± 45% and No target compounds >½ Report if the RQ in the sample is > 5 x the RQ in the blank.
Water	Low-flow	L&R 346.30	Field Parameters[3]	1 for every sample	Stabilization	Indicator parameters are considered stable when 3 consecutive readings, taken 5 minutes apart fall with the ranges shown below: • pH: ±0.2 pH units • Conductivity: ±3% of reading • DO: ±10% of reading or ±0.2 mg/L whichever is greater • ORP: ± 20 mV • Temperature: ±0.1^{oC} • Turbidity: ±10% or ±1.0 NTU, whichever is greater.
Soil	Encore©	L&R 356.10	VOCs	1 Field Duplicate for every 10 samples. 1 Field MSDS sample for every 20 samples. 1 Trip Blank for every shipping container.	Precision Precision Accuracy/Bias	RPD between duplicate samples should be ≤ 20% if both results are > 5x LOQ. Same as above. ± 45% and No target compounds > ½ Report if the RQ in the sample is > 5 x the RQ in the blank.

[1] Reference number from Worksheet #8.
[2] Reference number from Worksheet #10.
[3] Field parameters include pH, Conductivity, Oxidation Reduction Potential (ORP), Dissolved Oxygen (DO), Temperature, and Turbidity.

Sampling Design and Rationale

The groundwater sampling design and rationale for quarterly monitoring at SWMU 39, NSA Mid-South, as summarized in the following discussion of the items listed below, complies with the requirements specified in the agreements between TDEC and NAVFAC, and will achieve the DQOs/SSP goals outlined in Worksheet No. 6.

- Aquifer Assessment,
- Well Network,
- Groundwater COC,
- Sampling Frequency,
- Sampling Method,
- Sampling Equipment,
- Field Measurements,
- Field QC Samples,
- Laboratory Analytes,
- Data Management, and
- Project Reporting.

Much of the technical details are deferred to the applicable Lee & Ryan SOPs listed in Table 8-1 and referenced in the subsequent discussion. Copies of the SOPs are provided in Appendix A. A complete copy of this QAPP along with the SWMU 39 NSA Mid-South Site Health and Safety Plan (HASP) and other project-related reference materials will be included in the project documentation maintained on-site during sampling by Lee & Ryan field sampling personnel.

Aquifer Assessment

Prior to implementing remedial activities at the site, Lee & Ryan will implement an assessment of the aquifer's current conditions. The assessment consists of two tasks: vertical profiling of the aquifer and a geophysical survey. Eight specially constructed monitoring wells will be installed in the vicinity of SWMU 39, NSA Mid-South. The wells will have a 2-foot long screen for every 10 feet of saturated thickness. Stainless steel electrodes will be installed at a 1 meter spacing. Five of the wells will be installed in the southern-most plume, located at the southwest corner of Building 212. The other three wells will be installed in the northern plume, located to the west of the northwest corner of Building 212.

Upon completion, groundwater samples will be collected from each screened interval, approximately six samples per well, using the D 6771-02 low flow sampling methodology. The groundwater samples will be sent to the laboratory for analysis of volatile organic compounds (VOCs). The analytical results will be used to determine the spatial distribution of the COCs within the aquifer and provide a baseline for calibrating the geophysical data.

After sampling and prior to remediation, Lee & Ryan will conduct a geophysical survey. Electrical resistivity readings will be taken from each electrode to establish a 3-dimensional grid. The information will be used to assess the spatial distribution of the COCs within the aquifer and develop the remedial treatment plan.

After treatment, a second round of groundwater samples and geophysical survey will be conducted to evaluate the effectiveness of the remedial actions.

Well Network

The groundwater monitoring well network designated for quarterly monitoring at SWMU 39, NSA Mid-South includes seven existing wells identified in the contract documents (039G02LF, 039G03LF, 039G04LF, 039G10LF, 039G12LF, 039G13LF, and 039G22LF). The well locations are shown on Fig. 4. Historical groundwater analytical data indicates that chlorinated VOCs have consistently been observed in monitoring wells 039G03LF, 039G04LF, and 039G22LF. Accordingly, these wells will be sampled last to minimize the potential for cross contamination. Wells 10LF1U, 11LFNS, and 12F1U are located hydraulically down-gradient and in the presumed "Exit Pathway" for transport/migration of the COC contaminant plumes. Wells 02LF3 and 13LF1U are located hydraulically up-gradient of the contaminant plumes and yield uncontaminated groundwater which is representative of background (ambient).

Chemicals of Concern

Based on historical soil and groundwater sampling data obtained through March 2011, the COCs are trichloroethylene (TCE), and the breakdown products, cis-1,2-dichloroethane (cis-1,2-DCE), and vinyl chloride (VC). Historical sampling data did not identify any other metals, volatile and semi-volatile organic compounds or polychlorinated biphenyls in the groundwater.

Sampling Frequency

Groundwater

In accordance with the contract, groundwater samples will be collected quarterly from the monitoring well network at SWMU 39, NSA Mid-South. Lee & Ryan anticipates collecting the first round of samples in February 2012. Subsequent sampling events will be scheduled as follows for the first year: May 2012, August 2012, and November 2012.

As stated previously, groundwater samples will be collected from the special wells installed as part of the aquifer assessment. Along with the geophysical surveys, the wells will be sampled prior to, during, and after treatment.

Soils

As part of the remedial activities at the site, contaminated soil located from under the concrete pad and foundation remaining from former building S 74 will be excavated. Soil samples will be collected from the sidewalls and bottom of the excavation. The samples will be analyzed for the COCs. Additional samples will be collected as necessary.

Sampling Method

Groundwater

Unfiltered groundwater samples will be collected from each of the seven wells in the groundwater monitoring network and from the temporary wells installed during the aquifer assessment using ASTM's low-flow, minimal drawdown sampling method (ASTM D 6771-02). Properly implemented, the low-flow, minimal

drawdown sampling method provides representative (unfiltered) groundwater samples that are suitable for laboratory analyses.

Soils

Soil samples will be collected from the excavation using an Encore© sampler.

All of the samples will be stored on ice, placed in appropriate shipping containers, and then transported to the laboratory for anlaysis.

Sampling Equipment

Groundwater

Groundwater samples will be collected using a portable bladder/piston pump (decontaminated between uses) attached to disposable (one-use) polyvinyl chloride tubing. For the quaterly monitoring program, the pumps intake will be set near the midpoint of the monitored interval (determined from available well construction data). For the specialized aquifer assessment wells, the pumps intake will be set within a two foot screen. Packers will be used to isolate the pump from the rest of the borehole/well screens. Purge water pumped from each well during sampling will be containerized for later disposal.

Soils

Soil samples will be collected using an Encore© sampler. The Encore© sampler will be decontaminated between each use. It should be noted that the sampler uses a disposable cartridge to collect and store the sample. Once collected, the cartridge is sealed, labeled, placed in a sealed baggie, and stored on ice for submittal to the laboratory.

Field Measurements

Before any groundwater samples are collected from each well, Lee & Ryan field personnel will record the depths to the bottom of each well and the water table, in accordance with Lee & Ryan SOP for groundwater sampling. Groundwater surface elevations determined from the pre-sampling depth to water measurements will be used to assess flow directions and to calculate local hydraulic gradients needed to estimate representative rates of groundwater flow in the aquifer at SWMU 39, NSA Mid-South. For each well, Lee & Ryan field personnel will use an electronic water-level meter to determine the depth to the static water level, measured to the nearest 0.01 ft. After each use, the down-hole length of the water-level meter will be decontaminated as specified in Lee & Ryans SOP for Decontamination of Sampling Equipment. Equipment decontamination wash and rinse water will be containerized for latr disposal.

While purging each well, Lee & Ryan field personnel will periodically record purge water measurements of temperature, pH, specific conductance, ORP, turbidity, and dissolved oxygen. Field measurements will be obtained using a properly calibrated portable water-quality meter equipped with a multi-electrode flow-through cell and operated in accordance with the manufacturer's instructions/operations manual. A sample will be collected once the purge water demonstrates the stability requirements outlined in Worksheet #6.

Field QC Samples

One duplicate sample (soil and/or groundwater) will be collected for every 10 samples for QC purposes (See details in Worksheet No. 6 – Field Quality Control Samples). In accordance with Lee & Ryans SOP for Groundwater Sampling, the duplicate sample will be collected concurrent with the primary groundwater

sample from the well. For the soil samples, the sample will be "homoginized" in a clean stainless steel container, divided into aliquots, and then placed in the appropriate sample jars. Duplicate results will be reported for each sampling event.

In addition, Lee & Ryan personnel will collect one duplicate sample (soil and/or groundwater) for every 20 samples collected, to be used by the laboratory as a matrix spike duplicate sample. Collection of these samples will be in accordance with Lee & Ryan's SOPs.

Each duplicate sample will be obtained using the same sampling equipment, method, and type of container (provided by the analytical laboratory) and placed in the same ice-filled cooler as the associated primary sample.

Laboratory Analytes

The unfiltered groundwater samples from each well and the soil samples collected from beneath the concrete pad belonging to former building S74 (post excavation) will be analyzed for chlorinated organic compounds using USEPA Method 8260B. Analyses for chlorinated organic compoundss will be performed because previous RCRA investigations identified several chlorinated compounds (e.g., TCE, PCE, DCE and VC) as the COCs in the subsurface soils and groundwater at SWMU 39, NSA Mid-South.

Laboratory analysis of the groundwater and soil samples will be performed by ESC Lab Sciences (ESC), which is a DoD ELAP-accredited laboratory (see copy of the laboratory ELAP accreditation in Appendix B). Laboratory analyses will be performed in accordance with the analytical methods identified in Table 8-2. ESC will meet the media cleanup standards (MCSs) specified in Worksheet No. 9 – Reference Limits and Evaluation Tables, and will perform the laboratory analyses in accordance with the laboratory-specific SOPs developed based on the methods listed in Table 8-2.

The analytical data packages provided by ESC will be in a CLP-like format and will be fully validatable and contain raw data, summary forms for all sample and laboratory method blank data, and summary forms containing all method-specific QC, including analytical results, percent recoveries (%Rs), relative percent differences (RPDs), relative standard deviations (RSDs), and/or percent differences or percent drifts.

Data Management

The principal data generated for SWMU 39, NSA Mid-South will include:

- Electrical resisitivity data from the aquifer assessment,
- Field measurements of static water elevations and well depths,
- Field parameters (temperature, DO, Conductivity, ORP, pH, and turbidity) measured during groundwater sampling events, and
- Laboratory analytical data.

Field sampling log sheets will be organized by date and filed in the project files. Field logbooks will be used only for this project, titled based on date and activity; and maintained in the project files. As outlined below, the Lee & Ryan DVM (or designee) is responsible for the overall tracking of data generated for the project, data storage/archival/retrieval, data security, and data review.

Data Tracking: Data are tracked from generation to archiving in the Lee & Ryan project-specific files. The Lee & Ryan DVM (or designee) is responsible for tracking the samples collected and shipped to ESC. Upon receipt of the data packages from ESC, the Lee & Ryan DVM will monitor the data validation

effort, which includes verifying that the data packages are complete for all of the sample results delivered by ESC.

Data Storage, Archiving, and Retrieval: The data packages received from ESC are tracked in the data validation logbook. After the data are validated, the data packages are archived in secure files, which include the field records, sample logs, and chain-of-custody records.

Data Security: Access to Lee & Ryan project files is restricted to designated personnel only. Records can only be borrowed temporarily from the project file using a sign-out system. All data is stored electronically in a format that cannot be edited. The Lee & Ryan DVM maintains the electronic data files, and access to the data files is restricted to qualified personnel only. File and data backup procedures are routinely performed.

Data Review: This review comprises data verification, validation, and usability assessment. The data verification and validation processes and requirements, as described in Worksheet No. 12 - Data Verification and Validation (Steps I and IIa/IIb) Process Table, will be performed in accordance with the Lee & Ryan SOP for Data Validation - CLP VOCs for Solids and Aqueous Matrices (Table 8-1). The data usability assessment will, at a minimum, involve evaluation of the data characteristics listed below to ensure that the amount, type, and quality of data are sufficient to achieve project objectives:

Precision: A semi-quantitative estimate of the uncertainty in contaminant concentrations as a function of location will be made.

***Accuracy*:** Accuracy data will be evaluated to ensure sampling and measurement accuracy is within or exceeds analytical method specifications and may depend in part on the data validation findings.

Representativeness: This evaluation will assess whether the data are adequately representative of intended populations based on the sample collection and data generation requirements specified in this SAP.

Completeness: Failure to obtain critical data from planned locations will be documented. Minor variations in actual versus intended sampling locations (or depths) that do not adversely affect the attainment of project objectives will not be documented.

Comparability: This will be accomplished by comparing overall precision and bias among data sets for each matrix and analytical fraction for each sampled area. This will not require quantitative comparisons unless the Lee & Ryan DVM indicates that such quantitative analysis is beneficial to the project and the Lee & Ryan PM agrees.

Project Reporting

Groundwater sampling data obtained from SWMU 39, NSA Mid-South, along with a detailed interpretation and evaluation of the data, including quantitative trend analyses of the data for selected COC detected in applicable wells, will be presented in a report (QMR) submitted each quarter to the TDEC-Division of Remediation.

Field Project Tasks

Groundwater and soil sampling conducted as part of the remedial efforts at SWMU 39, NSA Mid-South will involve the following generalized field project tasks. Appendix A includes copies of the relevant Lee & Ryan SOPs referenced in the following brief descriptions of applicable tasks.

- Mobilization/Demobilization,
- Site-specific Health and Safety Training,
- Monitoring Well/Geophysical Probe Installation,
- Geophysical Survey (Electrical Resisitivity)
- Sampling Equipment Calibration,
- Groundwater Sample Collection,
- Concrete Pad Removal and Contaminated Soil Excavation
- Investigation-Derived Waste (IDW) Management,
- Field Decontamination Procedures,
- Sample Handling,
- Well Maintenance,
- Well P&A,
- Field Documentation Procedures, and
- Additional Project Related Tasks

Mobilization/Demobilization

Mobilization will consist of the delivery of all equipment materials, and supplies to the site, complete assembly in satisfactory working order of all such equipment at the site, and satisfactory storage at the site of all such materials and supplies. The Lee & Ryan FOL or designee will coordinate with the NSA Mid-South SM to identify appropriate locations for the storage of equipment with supplies. In accordance with the site-specific SP (Lee & Ryan 2011), health and safety training for all Lee & Ryan field personnel and subcontractors will be provided as part of site mobilization. Demobilization will consist of the prompt and timely removal of all equipment, materials, and supplies from the site following completion of the work. Demobilization includes the cleanup and removal of IDW generated during the performance of the work.

Site-Specific Health and Safety Training

There are no specialization/non-routine project-specific training requirements or certifications needed by Lee & Ryan personnel to complete the planned field activities at NSA Mid-South. All field personnel will have appropriate training to conduct the field activities to which they are assigned. Each site worker will be required to have completed the Occupational Safety and Health Administration Hazardous Waste Operations and Emergency Response (HAZWOPER) 40-hour health and safety training course (and 8-hour refresher training, as applicable). Site safety requirements are addressed in greater detail in the site-specific SP (Lee & Ryan 2011).

Monitoring Well/Geophysical Probe Installation

Eight specialized monitoring wells will be installed at the site, five in the southern contaminant plume and three in the northern contaminant plume. The wells will be constructed of approximately 60 feet of well screen (10 foot sections of 2-inch diameter PVC with a 2 foot long well screen on one end) and PVC riser. Stainless steel electrodes will be installed along the submerged portion of the well at a spacing of approximately 1 meter. The wells will be advanced to the bottom of the aquifer using a hollow stem auger rotary drill rig. As a result, soil cuttings will be generated. The soil cuttings will be sampled as necessary and then stockpiled on the concrete pad for later disposal.

Geophysical Survey (Electrical Resisitivity)

Lee & Ryan field personnel will conduct an electrical resisitivity survey of the aquifer. During the survey, the field data will automatically be stored on a computer. At the end of each day, the data will be copied to a CD/DVD for backup and given to the Lee & Ryan DVM (or his representative) for proper documentation and data storage.

Groundwater Sample Collection

The aquifer assessment and quarterly groundwater sampling and analysis program for SWMU 39 at NSA mid-South is outlined in Worksheet No. 7. Sample collection and other field project tasks will be in accordance with the site-specific SOPs listed in Table 8-1 (and provided in Appendix A). The sampling requirements for each type of analysis (i.e., bottleware, preservation, holding time) are listed in Table 8-2.

Lee & Ryan personnel will collect unfiltered groundwater samples from the following wells in the specified sequence listed below. Samples will be collected in accordance with the requirements for the low-flow minimal drawdown sampling method described in the Lee & Ryan SOP for Groundwater Sampling:

Well	Location
039G13LF	Upgradient/Background well
039G02LF	Upgradient/Background well
039G10LF	Exit Pathway well (farthest downgradient well)
039G12LF	Exit Pathway well
039G22LF	West of Southern Contaminant Plume (yields impacted groundwater)
039G03LF	Northern Contaminant Plume (yields impacted groundwater)
039G04LF	Southern Contaminant Plume (yields impacted groundwater)

Concrete Pad Removal and Contaminated Soil Excavation

As part of the remedial activities scheduled for the site, the concrete pad and foundation associated with the former laundry facility (Building S74) will be demolished and removed from the site. Once exposed, the contaminated soils underlying the pad (approximately 10 cubic yards) will be excavated, loaded onto trucks, and taken to a landfill for disposal. Upon completion of the excavation, soil samples will be collected from the sidewalls and bottom of the excavation and submitted to ESC laboratory for analysis of the COCs. The samples will be collected with an Encore© sampler in accordance with Lee & Ryan's SOP for surface soil sampling.

IDW Management

Soil cutting generated during the installation of the groundwater monitoring/geophysical probes will be stockpiled on the concrete slab and transported with the impacted soils excavated from beneath the concrete pad to the landfill for disposal.

Groundwater purged from each well during sampling will be containerized for later disposal. Other sampling-related IDW that is generated, including used personal protective equipment (PPE), will be bagged for off-site disposal at an authorized facility.

Equipment Decontamination

Down-hole drilling equipment will be decontminated before and between each well installation. Reusable soil and groundwater sampling equipment will be decontaminated before sampling and between samples at each location. Decontamination of the applicable sampling equipment will be performed in accordance with the requirements specified in Lee & Ryan's SOP for Decontamination of Field Sampling Equipment. All equipment decontamination fluids will be containerized for later disposal.

Sample Handling

Methods for sample handling will be in accordance with applicable Lee & Ryan SOPs and documented chain of custody control. Sample containers will be provided certified-clean by the analytical laboratory. Sample labeling and numbering, packaging, storage, and shipment handling will be in accordance with the Lee & Ryan's SOP for Sample Packaging and Shipping.

Well Maintenance

Before starting to collect the groundwater sample from each well, the above-ground components of the well will be visually inspected, including protective surface casing, well lock, concrete well pad, and collision-protection posts (bollards) if present. Observations of damage or excessive deterioration of well components, and maintenance work performed at each well will be documented in accordance with the Lee & Ryan SOP for Field Documentation, including photographs taken as appropriate.

Identically keyed bolt locks will be placed on all of the wells at SWMU 39, NSA Mid-South. Field personnel will notify the Lee & Ryan FOL if any of the well locks are missing or found unlocked.

Well P&A

Upon completion of the in-situ chemical oxidation treatments, Lee & Ryan field personnel will supervise the P&A of the temporary monitoring/geophysical wells installed as part of the aquifer assessment. Qualified, capable, and experienced personnel will perform the P&A work in accordance with TDEC requirements to seal the wells below grade. However, the TDEC does not require official notification of the P&A of monitoring wells. All the P&A work will be documented in accordance with the Lee & Ryan SOP for Field Documentation, including photographs taken before and after the work.

To P&A the well, the well casing will be filled with pelletized bentonite from the bottom up to within approximately 2 ft of the ground surface. The upper 5 ft of the well riser casing will be cut and removed along with the steel protective surface casing, concrete well pad, and collision protection bollards, if present. Motorized equipment (e.g., dozer or front-end loader) operated by trained and qualified personnel will be used to extract, lift, and move the bollards.

Field Documentation Procedures

In accordance with the Lee & Ryan SOP for Field Documentation, a summary of all field activities will be properly recorded in a bound logbook with consecutively numbered pages that cannot be removed. Logbooks will be assigned to field personnel and will be stored in a secured area when not in use. At a minimum, the following information will be recorded in the site logbook:

- Name of the person to whom the logbook is assigned.
- Project name.
- Project start date.
- Names and responsibilities of on-site project personnel including subcontractor personnel.
- Arrival/departure of site visitors.
- Arrival/departure of equipment.
- Sampling activities and sample log sheet references.
- Description of subcontractor activities.
- Sample pick-up information including chain-of-custody form numbers, air bill numbers, carriers, times, and dates.
- Descriptions of borehole activities and operations.
- Descriptions monitoring well installation activities and operations, if monitoring wells are deemed necessary.
- Health and safety issues.
- Description of photographs including date, time, photographer, picture number, location, and compass direction of each photograph.

All logbook entries will be written in ink, and no erasures will be made. If an incorrect entry is made, striking a single line through the incorrect information will make the correction, and the person making the correction will initial and date the change.

Reference Number	Title, Revision Date and/or Number	Originating Organization	EquipmentType	Modified for Project Work? (Y/N)	Comments
326.10	SOP for Decontamination of Non-Dedicated Sampling Equipment, Rev. No. 1 - 9/17/2009	Lee & Ryan	NA	N	NA
326.20	SOP for Preparation of Field Quality Control Samples, Rev. No. 1 - 9/17/2009	Lee & Ryan	NA	N	NA
326.30	SOP for Field Documentation, Rev. No. 1 - 9/17/2009	Lee & Ryan	NA	N	NA
326.40	SOP for Photographic Documentation, Rev. No. 1 - 9/10/2009	Lee & Ryan	NA	N	NA
346.10	SOP for Sample Packaging and Shipping, Rev. No. 2 - 9/1/2009	Lee & Ryan	NA	N	NA
346.20	SOP for Sample Chain-of-Custody Documentation, Rev. No. 1 - 9/17/2009	Lee & Ryan	NA	N	NA
346.30	SOP for Groundwater Monitoring Well Sampling, Rev. No. 1 - 9/21/2009	Lee & Ryan	NA	N	NA
346.40	SOP for Manual Water Level Measurements, Rev. No. 1 - 9/21/2009	Lee & Ryan	NA	N	NA
356.10	SOP for Surface Soil Sample Collection, Rev. No. 1 - 9/16/2009	Lee & Ryan	NA	N	NA
356.20	SOP for Sub-surface Soil Sample Collection, Rev. No. 1 - 9/18/2009	Lee & Ryan	NA	N	NA

Sampling Locations and Methods/SOP Requirements Table

Sampling Location/ID Number	Matrix	Depth (units)	Analytical Group	Concentration Level	Number of Samples (identify field duplicates)	Sampling SOP Reference[1]	Rationale for Sampling Location
Assessment Wells	Groundwater	60-100 feet	VOCs	0-100 ug/L	52 total samples including MS/MSD & Duplicate samples per event	Lee & Ryan SOP 346.30	Confirmation of ISCO Effectiveness
039G-(02,03,04,10,12, 22) - LF	Groundwater (Quarterly Monitored Wells)	Average: 75 feet	VOCs	0-100 ug/L	31 total samples including 2 MS/MSD & 2 Duplicate samples	Lee & Ryan SOP 346.30	Confirmation of ISCO Effectiveness
NA	Soil	0-3.5 feet below ground surface	VOCs	0-100 mg/Kg	Approx. 5 total samples including 1 MS/MSD, 1 Duplicate & 1 Rinsate Sample	Lee & Ryan SOP 356.10	Confirmatory/ Delineation of impacted soil

[1]Project Sampling SOP Reference Table (Worksheet #8, Page 31).

Analytical SOP Requirements Table

Matrix	Analytical Group	Concentration Level	Analyticaland Preparation Method/SOP Reference[1]	Sample Volume	Containers (number, size, and type)	Preservation Requirements (chemical, temperature, light protected)	Maximum Holding Time (preparation/ analysis)
Water	Volatiles: Chlorinated Organics	Low	5030/8260B 330752/330363	5 mL	3 amber 40 mL	HCL <2 ph 4°C	14 days
Soil	Volatiles: Chlorinated Organics	Low	5035/8260B 330751/330363	5g	3 amber 40 mL	2 bisulfate/1 methanol 4°C	14 days

[1]Analytical SOP References Table (Worksheet #10).

Field Quality Control Sample Summary Table

Matrix	Analytical Group	Concentration Level	Analytical and Preparation SOP Reference[1]	No.of Sampling Locations[2]	No. of Field Duplicate Pairs	No. of MS	No. of Field Blanks	No. of Equip. Blanks	No. of PT Samples	Total No. of Samples to Lab
Water	VOCs	Low – Medium	5030/8260B 330752/330363	8 x 6 = 48 8 per event	3	3	3	3	0	60 per event
Water	VOCs	Low	5030/8260B 330752/330363	7 per Quarter	1	1	1	1	0	11 per Quarter
Soil	VOCs	Low	5035/8260B 330751/330363	5	1	1	1	1	0	9

[1]Analytical SOP Reference Table (Worksheet #10).
[2]Samples collected from different depths at the same location, will be counted as a discrete sampling location or station.

Analytical Services Table

Matrix	Analytical Group	Concentration Level	Sample Locations/ID Numbers	Analytical SOP	Data Package Turnaround Time	Laboratory/Organization (Name andAddress, Contact Person and Telephone Number)	Backup Laboratory/Organization (Name and Address, Contact Person and Telephone Number)
Water	VOCs	Low	Multiple	330363	14 Days	ESC Lab Sciences, Duane Hattem, (616) 307-1587	NA
Soil	VOCs	Low	Multiple	330363	14 Days	ESC Lab Sciences, Duane Hattem, (616) 307-1587	NA

Matrix: Water
Analytical Group: VOCs

Analyte[1]	CAS No.	PAL (µg/L)	PAL Reference[3]	Project Quantitation Limit (µg/L)	Laboratory Quantitation/Detection Limits[2] (µg/L)		
					LOQ	MDLs	QLs
Vinyl chloride	75-01-4	2.0	MCL	1.0	1	0.282	1.0
1,1-dichloroethene	75-35-4	7.0	MCL	1.0	1	0.186	1.0
Cis-1,2-dichloroethene	156-59-2	70	MCL	1.0	1	0.274	1.0
Trans-1,2-dichlorothene	156-60-5	100	MCL	1.0	1	0.286	1.0
Tetrachloroethene	127-18-4	5.0	MCL	1.0	1	0.236	1.0
Trichloroethene	79-01-6	5.0	MCL	1.0	1	0.294	1.0

Matrix: Soils
Analytical Group: VOCs

Analyte[1]	CAS No.	PAL (µg/Kg)	PAL Reference[4]	Project Quantitation Limit (µg/L)	Laboratory Quantitation/Detection Limits[2] (µg/L)		
					LOQ	MDL	QL
Vinyl chloride	75-01-4	0.0056	RSL	17	1.0	0.382	1.0
1,1-dichloroethene	75-35-4	2.5	RSL	---	1.0	0.626	1.0
Cis-1,2-dichloroethene	156-59-2	21	RSL	0.67	1.0	0.356	1.0
Trans-1,2-dichlorothene	156-60-5	29	RSL	7100	1.0	0.393	1.0
Tetrachloroethene	127-18-4	0.049	RSL	3300	1.0	0.399	1.0
Trichloroethene	79-01-6	0.72	RSL	---	1.0	0.332	1.0

[1]Analytical MDLs and QLs are those documented in validated methods.
[2]Achievable MDLs and QLs are limits that an individual laboratory can achieve when performing a specific analytical method.
[3]EPA MCL Drinking Water Standards, 3/6/2012
[4]EPA Superfund RSL soil to groundwater, 2011

Laboratory: ESC Lab Science, Inc.
12065 Lebanon Road. Mt. Juliet, TN 37122
Contact: Dixie Marlin
(800) 767-5859

Reference Number	Title,Revision Date,and/or Number	Definitiveor Screening Data	AnalyticalGroup	Instrument	Organization Performing Analysis	Modifiedfor Project Work? (Y/N)
330363	Volatile Organic Compounds by GC/MS 01/30/09 R16	Definitive	Volatiles	GCMS	ESC Lab Sciences	N

Matrix	Soil / Water
Analytical Group	Volatiles
Concentration Level	Low
Sampling SOP	346.30
Analytical Method/SOP Reference	SW-846 8260B 330363
Sampler's Name	TBD
Field Sampling Organization	Lee & Ryan
Analytical Organization	ESC Lab Sciences
No. of Sample Locations	TBD

QCSample:	Frequency/ Number	Method/SOP QC Acceptance Limits	Corrective Action	Person(s) Responsible for Corrective Action	Data Quality Indicator (DQI)	Measurement Performance Criteria
WG Blank	1/Preparation batch (20 samples)	No target compounds >1/2 RL	If sufficient sample volume is available, reanalyze affected samples. If insufficient amount of sample is available qualify data as needed.	JD Gentry	Accuracy/Bias-Contamination	No target compounds >1/2 RL
WG LCS/LCSD	1/Preparation batch (20 samples	+/- 45% of calculated mean, <25% rpd	Same as above	JD Gentry	Accuracy/Bias-Contamination	+/- 42% <25% rpd
WG Spike/Spike Dup	1/Preparation batch (20 samples	+/- 68% of calculated mean, <25% rpd	Qualify data as needed	JD Gentry	Accuracy/Bias-Contamination	+/- 68% <25% rpd

Data Verification

Verification Input	Description	Internal/ External	Responsible for Verification (Name, Organization)
Chain-of-Custody	Chain-of-custody forms and shipping documentation will be reviewed internally upon their completion and verified against the packed sample coolers they represent. The shipper's signature on the chain-of-custody should be initialed by the reviewer, a copy of the chain-of-custody retained in the site file, and the original and remaining copies taped inside the cooler for shipment. See chain-of-custody SOP for further details.	I	QA/QC Manager, Lee & Ryan
Audit Reports	Upon report completion, a copy of all audit reports will be placed in the site file. If corrective actions are required, a copy of the documented corrective action taken will be attached to the appropriate audit report in the site file. At the beginning of each week, and at the completion of the site work, site file audit reports will be reviewed internally to ensure that all appropriate corrective actions have been taken and that corrective action reports are attached. If corrective actions have not been taken, the site manager will be notified to ensure action is taken.	I	Angelo Dattilo, Project Manager, Lee & Ryan
Field Notes	Field notes will be reviewed internally and placed in the site file. A copy of the field notes will be attached to the final report.	I	Angelo Dattilo, Project Manager, Lee & Ryan
Laboratory Data	All laboratory data packages will be verified internally by the laboratory performing the work for completeness and technical accuracy prior to submittal. All received data packages will be verified externally according to the data validation procedures specified in Worksheet #34.	I E	Dixie Marlin, QA/QC Lab Manager ESC Lab Sciences QA/QC Manager, Lee & Ryan

Validation (Steps IIa and IIb) Process Table

StepIIa/IIb	Validation Input	Description	ResponsibleforValidation (Name,Organization)
IIa	SOPs	Ensure that all sampling and analytical SOPs were followed.	QA/QC Manager, Lee & Ryan
IIa	Documentation of Method QC Results	Establish that all method required QC samples were run and met required limits	QA/QC Manager, Lee & Ryan
IIb	Documentation of QAPP QC Sample Results	Establish that all QAPP required QC samples were run and met required limits.	QA/QC Manager, Lee & Ryan
IIb	Project Quantitation Limits	All sample results met the project quantitation limit specified in the QAPP	QA/QC Manager, Lee & Ryan
IIb	Raw Data	10% review of raw data to confirm laboratory calculations.	Jennifer Resnik, Project Chemist, Toltest, Inc.

Validation (Steps IIa and IIb) SummaryTable

Step IIa/IIb	Matrix	Analytical Group	Concentration Level	Validation Criteria	Data Validator (title and organizational affiliation)
IIa	Water	VOCs	Low-Medium	Region IV – Data Validation Guidelines State of Tennessee DNR Guidelines	Jennifer Resnik, Project Chemist, TolTest, Inc.
IIa	Soil	VOCs	Low-Medium	Region IV – Data Validation Guidelines State of Tennessee DNR Guidelines	Jennifer Resnik, Project Chemist, TolTest, Inc.
IIb	Water	VOCs	Low-Medium	SAP Worksheets 6, 9, and 11	Jennifer Resnik, Project Chemist, TolTest, Inc.
IIb	Soil	VOCs	Low-Medium	SAP Worksheets 6, 9, and 11	Jennifer Resnik, Project Chemist, TolTest, Inc.

Project Schedule/Timeline Table

Activities	Organization	Dates (MM/DD/YY)		Deliverable	Deliverable Due Date
		Anticipated Date(s) Of Initiation	Anticipated Date of Completion		
QAPP Preparation	Lee & Ryan	10/13/11	3/15/12	QAPP Document	11/30/11
Groundwater Sampling	Lee & Ryan	3/15/12	6/10/14	Groundwater Samples	Quarterly
Laboratory Analysis	ESC	3/15/12	6/10/14	Analytical Report	Quarterly
Data Review	Lee & Ryan	3/24/12	6/10/14	Data Review Report	Quarterly
Discrete GW Sampling	Lee & Ryan	3/12/12 & 10/12	3/21/12 & 10/12	Groundwater Samples	4/1/12 11/12
Geophysics	Lee & Ryan	4/17/12, 6/12, & 9/12	12/1/12	Report	NA
Injections (ISCO)	Envirox	6/12/12	7/26/12	Interim Measure Progress Report	10/12 Quarterly Report
Concrete Pad Removal	Lee & Ryan	4/16/12	5/1/12	Interim Measure Progress Report	NA
Soil Sampling	Lee & Ryan	4/19/12	5/1/12	Soil Samples	NA
Soil Excavation	Lee & Ryan	4/16/12	5/1/12	Interim Measure Progress Report	5/1/12

Sampling Design and Rationale

Describe and provide a rationale for choosing the sampling approach (e.g., grid system, biased statistical approach):

The wells being installed as part of the Aquifer Assessment will be installed using a grid. The baseline location for the grid will be established using the analytical results presented by EnSafe.

Describe the sampling design and rationale in terms of what matrices will be sampled, what analytical groups will be analyzed and at what concentration levels, the sampling locations (including QC, critical, and background samples), the number of samples to be taken, and the sampling frequency (including seasonal considerations) [May refer to map or Worksheet #18 for details]:

Previous investigations have demonstrated that the chemicals of concern are chlorinated solvents and other volatile organic compounds (VOCs). The COC's can be addressed using US EPA method 8260B. The sampling locations are shown on Figure 4. Lee & Ryan anticipates that the aquifer assessment wells will be sampled twice, approximately two quarters apart. The monitoring wells will be sampled quarterly until the site meets the State of Tennessee's closure requirements.

Field Equipment Calibration, Maintenance, Testing, and Inspection Table

Field Equipment	Calibration Activity	Maintenance Activity	Testing Activity	Inspection Activity	Frequency	Acceptance Criteria	Corrective Action	Responsible Person	SOP Reference[1]
Geoprobe/ Drill Rig	NA	NA	Basic Drilling Functions	Check Operating	Daily	Prior to drilling activities	Repair	Drill Rig Operator	NA
Geoprobe / Drill Rig	NA	NA	Same	Check Hydraulic &	Daily	Prior to drilling activities	Fill	Drill Rig Operator	NA
PID	Calibrate to 100 ppm with Isobutylene	NA	NA	Inspect for proper functioning	Prior to use	Prior to and after use	Clean or Replace lamp	Scientist	Equipment Manual
GPS	NA	NA	Acquisition of at least 3 satellites	Inspect for proper functioning	Prior to use	Prior to use	Repair or Replace	Scientist	NA
Geopump	NA	NA	Basic Functions	verify the pump is functioning properly	Prior to use	Prior to and after use	Repair or Replace	Scientist	NA
Excavator	NA	NA	Basic Functions	Check Operating Functions	Daily	Prior to excavation activities	Repair	Operator	NA
Dump Truck	NA	NA	Basic Functions	Check Operating	Daily	Prior to excavation	Repair	Operator	NA
Multi-Meter	Calibrate: pH, DO,	NA	Basic Functions	Check Operating	Daily	Prior to Use	Repair	Operator	Equipment Manual

[1]Project Sampling SOP References Table (Worksheet #8, Page 31).

Analytical Instrument and Equipment Maintenance, Testing, and Inspection Table

Instrument/ Equipment	Maintenance Activity	Testing Activity	Inspection Activity	Frequency	Acceptance Criteria	Corrective Action	Responsible Person	SOP Reference[1]
GCMS	Replace liners, traps, and columns	NA	Perform visual inspections of all units	See 330363	See 330363	Correct issues; re-run calibration and affected samples	JD Gentry	330363

[1]Analytical SOP References Table (Worksheet #10).

Sample Handling System

SAMPLE COLLECTION, PACKAGING, AND SHIPMENT
Sample Collection (Personnel/Organization): Stephen Brellentin – Lee & Ryan
Sample Packaging (Personnel/Organization): Stephen Brellentin – Lee & Ryan
Coordination of Shipment (Personnel/Organization): Stephen Brellentin – Lee & Ryan
Type of Shipment/Carrier: Hand delivery of the samples is expected
SAMPLE RECEIPT AND ANALYSIS
Sample Receipt (Personnel/Organization): ESC laboratory technicians
Sample Custody and Storage (Personnel/Organization): ESC laboratory technicians
Sample Preparation (Personnel/Organization): ESC laboratory technicians
Sample Determinative Analysis (Personnel/Organization): ESC laboratory technicians
SAMPLE ARCHIVING
Field Sample Storage (No. of days from sample collection): 14 Days
Sample Extract/Digestate Storage (No. of days from extraction/digestion):
Biological Sample Storage (No. of days from sample collection): Not Applicable
SAMPLE DISPOSAL
Personnel/Organization: ESC laboratory technicians
Number of Days from Analysis: 90 Days

Sample Custody Requirements

Sample Custody requirements are divided into four (4) parts: Field custody, laboratory custody, sample identification, and Chain-of-Custody (Transfer and Shipping). Final evidence files, including originals of laboratory reports, will be maintained at the Lee & Ryan office in Greenfield, Indiana. Sample custody procedures are outlined in Lee & Ryan SOPs 326.30, 346.10, and 346.20 attached as **Appendix A**.

Field Sample Custody Procedures (Sample Collection, Packaging, Shipment, and Delivery to Laboratory):

In general:

- The field sampler is personally responsible for the care and custody of the samples until they are transferred to another party, or properly dispatched to the Project Manager or laboratory personnel. As few people as possible should handle the samples.
- Using waterproof ink, all bottles will be labeled with sample numbers and locations.
- Photographs will be taken of any field observations that are deemed abnormal or representative of soil impacts at the site.

Laboratory Sample Custody Procedures (Receipt of Samples, Archiving, Disposal):

Laboratory custody procedures for sample receiving and log-in: sample storage; tracking during sample preparation and analysis; and storage of data are described in the attached laboratory Quality Assurance Manual (**Appendix B** of the QAPP). Laboratory SOPs are attached. (**Appendix C** of the QAPP). Laboratory custody procedures will include the following:

- The minimum number of people possible will handle the samples.
- The laboratory will set aside a secured sample storage area consisting of a clean, dry, refrigerated, isolated room. This room should be capable of being locked if deemed necessary.
- A specific person or persons will be designated custodian(s). The custodian(s) who will indicate receipt by signing the chain-of-custody form will receive all incoming samples.

Sample Custody Requirements

- The sample custodian(s) will maintain a bound logbook or other official record-keeping system to record the following information for each sample: person delivering the sample, person receiving the sample, date and time received, source of the sample, sample identification log number, mode of transportation to the laboratory, and condition in which the sample was received. A standard format must be maintained.
- The custodian(s) will ensure that samples that require special handling are properly stored and maintained prior to analysis.
- After sample analyses are complete, the laboratory may discard samples only with the concurrence of the sampler. If the sample is discarded, time and date must be recorded. Analytical data is to be kept secured and released to authorized personnel only.

Sample IdentificationProcedures:

Samples will be maintained using the following procedures:

- A label identifying the sample must be affixed to the sample. The sample label will contain the project name, date, time of collection, and the sample designation. The labels will be completed with waterproof ink unless prohibited by environmental conditions.
- Sample specific data will be recorded in the field logbook at the time of collection. The data will be entered in the logbook and sampling personnel will maintain custody of the logbook. Documentation will include observations and measurements during sample collection. Observations and measurements that will be recorded include instrument measurements, sample descriptions, position measurements, sampling equipment, persons performing sampling, date of collection, and time of collection.

Chain-of-custodyProcedures:

- A properly completed chain-of-custody form will accompany the samples. The sample numbers and locations will be listed on the chain of custody form. When transferring the possession of samples, the individuals relinquishing and receiving will sign, date, and note the time on the record. This record documents transfer of custody of samples from the sampler to another person, to the laboratory, or to/from a secure storage area.

Sample Custody Requirements

Chain-of-Custody Procedures:

- A properly completed chain-of-custody form will accompany the samples. The sample numbers and locations will be listed on the chain of custody form. When transferring the possession of samples, the individuals relinquishing and receiving will sign, date, and note the time on the record. This record documents transfer of custody of samples from the sampler to another person, to the laboratory, or to/from a secure storage area.

- Samples will be properly packaged for shipment and dispatched to the appropriate laboratory for analysis, with a separate signed custody record enclosed in each sample box or cooler. Shipping containers will be secured with strapping tape and custody seals for shipment to the laboratory. The preferred procedure includes use of a custody seal attached to the front right and back left of the cooler. The custody seals are covered with clear plastic tape. The cooler is strapped shut with strapping tape in at least two locations.

- Whenever samples are co-located with another party, a separate Sample Receipt is prepared for those samples and marked to indicate with whom the samples are being co-located. The person relinquishing the samples to the facility or agency should request the representative's signature acknowledging sample receipt. If the representative is unavailable or refuses, this is noted in the "Received By" space.

- The Chain-of-Custody form identifying the contents will accompany all shipments by. The original form will accompany the shipment and a carbon copy will be retained by the sampler and returned to the sampling office.

- If the samples are sent by common carrier, a bill of lading should be used. Receipts of bills of lading will be retained as part of the permanent documentation. Commercial carriers are not required to sign off on the custody form as long as the custody forms are sealed inside the sample cooler and the custody seals remain intact. The laboratory must confirm the condition of the seal upon receipt.

Project Documents and Records Table

Sample Collection Documents and Records	On-Site Analysis Documents and Records	Off-Site Analysis Documents and Records	Data Assessment Documents and Records	Other
Field Logbook Soil Boring Logs Monitoring Well Construction Logs Well Sampling Field Sheet Chain-of-Custody	Not Applicable	Not Applicable	Site Map Potentiometric Contour Maps Analytical Data Summary Tables	NA

Planned Project Assessments Table

Assessment Type	Frequency	Internal or External	Organization Performing Assessment	Person(s) Responsible for Performing Assessment	Person(s) Responsible for Responding to Assessment Findings	Person(s) Responsible for Identifying and Implementing Corrective Actions (CA)	Person(s) Responsible for Monitoring Effectiveness of CA
Quarterly GW Sampling	Quarterly	External	JBL/Ensafe	TBD	Stephen Brellentin Field Scientist Lee & Ryan	TBD	Angelo Dattilo, Project Manager, Lee & Ryan
GW Profiling	Two Times	Internal	Lee & Ryan	Stephen Brellentin Field Scientist Lee & Ryan	TBD, Lee & Ryan TBD, Vironex	TBD, Vironex	Angelo Dattilo, Project Manager, Lee & Ryan
Geophysical Survey	Four Times	Internal	Lee & Ryan	Lon M. Cooper Sr. Engineer Lee & Ryan	Dr. Remke van Damm Associate Professor Michigan State University	TBD Field Scientist Lee & Ryan	Angelo Dattilo, Project Manager, Lee & Ryan

Assessment Findings and Corrective Action Responses

Assessment Type	Nature of Deficiencies Documentation	Individual(s) Notified of Findings (Name, Title, Organization)	Timeframe of Notification	Nature of Corrective Action Response Documentation	Individual(s) Receiving Corrective Action Response (Name, Title, Org.)	Timeframe for Response
GW Analytical Results	Exceeded Holding Times	Mrs. Dixie Marlin, QA/QC Lab Manager ESC Lab Sciences	Immediately	Re-Sample	Angelo Dattilo Project Manager Lee & Ryan	1 Week
	Failed Internal Laboratory QA/QC	Mrs. Dixie Marlin, QA/QC Lab Manager ESC Lab Sciences	Immediately	Re-Run Analyses	Mrs. Dixie Marlin, QA/QC Lab Manager ESC Lab Sciences	Immediate
	Failed External QA/QC (Dups)	Angelo Dattilo Project Manager Lee & Ryan	24 Hours	Re-Sample	Andrea Hennessy Scientist Lee & Ryan	1 Week
	Incorrect Sampling Procedures	Angelo Dattilo Project Manager Lee & Ryan	24 Hours	Re-Sample	Andrea Hennessy Scientist Lee & Ryan	1 Week
Soil Analytical Results	Exceeded Holding Times	Mrs. Dixie Marlin, QA/QC Lab Manager ESC Lab Sciences	Immediately	Re-Sample	Angelo Dattilo Project Manager Lee & Ryan	1 Week
	Failed Internal Laboratory QA/QC	Mrs. Dixie Marlin, QA/QC Lab Manager ESC Lab Sciences	Immediately	Re-Run Analyses	Mrs. Dixie Marlin, QA/QC Lab Manager ESC Lab Sciences	Immediate
	Failed External QA/QC (Dups)	Angelo Dattilo Project Manager Lee & Ryan	24 Hours	Re-Sample	Andrea Hennessy Scientist Lee & Ryan	1 Week
	Incorrect Sampling Procedures	Angelo Dattilo Project Manager Lee & Ryan	24 Hours	Re-Sample	Andrea Hennessy Scientist Lee & Ryan	1 Week

QA Management Reports Table

Type of Report	Frequency (Daily, Weekly, Monthly, Quarterly, Annually, etc.)	Projected Delivery Date(s)	Person(s) Responsible for Report Preparation (Title and Organizational Affiliation)	Report Recipient(s) (Title and Organizational Affiliation)
Groundwater Analytical Data (Level II Data Package)	Quarterly	Every 3 months starting February 2012	Mrs. Dixie Marlin, QA/QC Lab Manager ESC Lab Sciences	Angelo Dattilo, Project Manager, Lee & Ryan
Soil Analytical Data (Level II Data Package)	Once	April 2012	Mrs. Dixie Marlin, QA/QC Lab Manager ESC Lab Sciences	Angelo Dattilo, Project Manager, Lee & Ryan
Field Notebook	Daily (while on-site)	Within 24 Hours	Stephen Brellentin Scientist Lee & Ryan	Angelo Dattilo, Project Manager, Lee & Ryan
Sampling Field Sheets	Daily (while sampling)	Within 24 Hours	Stephen Brellentin Scientist Lee & Ryan	Angelo Dattilo, Project Manager, Lee & Ryan
Calibration Logs	Daily (while sampling)	Within 24 Hours	Stephen Brellentin Scientist Lee & Ryan	Angelo Dattilo, Project Manager, Lee & Ryan

Usability Assessment

A team of personnel at Lee & Ryan, Inc will perform the Data Usability Assessment. Angelo Dattilo, Project Manager, will be responsible for information in the Usability Assessment. He will also be responsible for assigning work to the individual task members supporting the assessment. Note that the Data Usability Assessment will be conducted on validated data. After the first phase of the Data Usability Assessment has been performed, data deemed appropriate for use will then be used to develop a remediation plan for the treatment of the contaminant plume. A second assessment will be performed after the first round of treatment has been completed. The results will be used to revise the remediation plan as necessary. The results of the Data Usability Assessment will be presented in the final project report. The following items will be assessed and conclusions drawn based on their results:

Precision – Results of all laboratory duplicates for the volatile organic compounds (VOCs) will be presented separately in tabular format for each analysis. For each duplicate pair, the relative percent difference (RPD) will be calculated for each analyte whose original and duplicate values are both greater than, or equal to the quantitation limit. The RPDs will be checked against the measurement performance criteria presented on Worksheet #12. The RPDs exceeding criteria will be identified on the tables. Additionally, the RPD of each analyte will be averaged across all duplicate pairs whose original and duplicate values are both greater than, or equal to the quantitation limit, and the combined overall average RPD for each analysis will be calculated for the laboratory duplicates. A discussion will follow summarizing the results of the laboratory precision. Any conclusions about the precision of the analyses will be drawn and any limitations on the use of the data will be described.

Accuracy/Bias Contamination – Results for all laboratory method blanks and instrument blanks will be presented separately in tabular format for each analysis of VOCs. The results for each analyte will be checked against the measurement performance criteria presented on Worksheet #12. Results for analytes that exceed criteria will be identified on the tables. A discussion will follow summarizing the results of the laboratory accuracy/bias. Any conclusions about the accuracy/bias of the analyses based on contamination will be drawn and any limitations on the use of the data will be described.

Overall Accuracy/Bias – The results for the 2nd Source Standard/SRM will be presented in tabular format to compare these results to the sample batch they apply to. These results will be compared to the requirements listed on Worksheet #12. A discussion will follow summarizing overall accuracy/bias. Any conclusions about the overall accuracy/bias of the analyses will be drawn and any limitations on the use of the data will be described.

Sensitivity – Results for all laboratory fortified blanks will be presented separately in tabular format for each analysis of VOCs. The results for each analyte will be checked against the measurement performance criteria presented on Worksheet #12 and cross-checked against the quantitation limits presented on Worksheet #15. Results for analytes that exceed criteria will be identified on the tables. A discussion will follow summarizing the results of the laboratory sensitivity. Any conclusions about the sensitivity of the analyses will be drawn and any limitations on the use of the data will be described.

Representativeness – Although sample size somewhat limits the statistical confidence for applying contaminant levels to the entire site, it does conform to currently accepted methods. The sample data can be used to establish those areas requiring additional treatment with potassium permanganate. Once treatment has been completed, the sample data can be used to establish that the cleanup criteria have been met.

Comparability – The results of this study will be used as a benchmark for determining comparability for data collected during any potential future sampling events using the same or similar sampling and analytical SOPs.

Completeness – A completeness check will be done on all of the data generated by the laboratory. Completeness criteria are presented on Worksheet #12. Completeness will be calculated for each analyte as follows. For each analyte, completeness will be calculated as the number of data points for each analyte that meets the measurement performance criteria for precision, accuracy/bias, and sensitivity, divided by the total number of data points for each analyte. A discussion will follow summarizing the calculation of data completeness. Any conclusions about the completeness of the data for each analyte will be drawn and any limitations on the use of the data will be described.

Graphics – VOCs: Graphic plots will be constructed depicting the contaminant concentrations found at each sampling location through time. Separate plots will be prepared for each COC present, as well as the total concentration of contaminants (VOCs) and the number of valid data points used. **Note:** Based on the results of the data, a statistician will use his/her professional judgment to include other pertinent parameters. Each graphic will contain a detailed legend. Additionally, each graphic will include a summary report indicating trends, anomalies, or other factors pertinent to the understanding of the data.

In addition, graphics will be prepared showing the spatial distribution of the contaminants within the aquifer.

Reconciliation – Each of the Project Quality Objectives (PQOs) presented on Worksheet #12 will be examined to determine if the objective was met. This examination will include a combined overall assessment of the results of each analysis pertinent to an objective. Each analysis will first be evaluated separately in terms of the major impacts observed from the Data Validation, Data Quality Indicators, and measurement performance criteria assessments. Based on the results of these assessments, the quality of the data will be determined. Based on the quality determined, the usability of the data for each analysis will be determined. Based on the combined usability of the data from all analyses for an objective, it will be determined if the PQO was met and whether project action limits were exceeded. The final report will include a summary of all the points that went into the reconciliation of each objective. As part of the reconciliation of each objective, conclusions will be drawn and any limitations on the usability of any of the data will be described.

APPENDIX B

Site Specific Field Standard Operating Procedures

Sampling Analysis Plan
Remediation of SWMU 39 TCE Plume
NSA Mid-South
Millington, TN 38054

1.0 Purpose

This Standard Operating Procedure (SOP) describes the process to minimize the possibility of on or off-site spreading or transferring of hazardous substances and artificial sample contamination among boreholes and wells. All non-disposable sampling and drilling equipment which contacts potentially contaminated soil, waste, or water must be cleaned and/or decontaminated.

The following SOP provides minimum guidelines for ensuring analytical integrity and consistency. The person performing the sampling is responsible for implementing these decontamination procedures.

2.0 Scope

2.1 The scope of this SOP is to provide rationale and procedures to adequately decontaminate non-dedicated sample equipment. The sampling equipment that will be addressed in this SOP includes but may not be limited to the following types of equipment:

1. Submersible groundwater sampling pumps
2. Soil sampling systems (Geoprobe, hang augers, and hollow-stem auger rigs)
3. Groundwater sampling equipment (water level indicators and Inter-phase probes)
4. Sediment sampling devices (stainless steel scoops and shovels)

3.0 Requirements

3.1 Decontamination of Equipment

The following guidelines provide methods for cleaning non-dedicated equipment used for sampling wells. These methods are observed in the office prior to taking the equipment into the field. Note that dedicated and/or disposable sampling equipment is preferred when feasible.

3.2.1 Portable or Submersible Pump

Lee & Ryan owns one (1) submersible pump, often called the “purge pump”. Due to the construction of the pump, it is unable to be disassembled for maintenance. A detergent solution using a stiff-bristled brush to clean the pump is necessary. **This pump shall not be used for sampling. It is to be used for developing newly installed wells.**

Although samples will not be collected with the purge pump, the hosing to the pump should be decontaminated or simply replaced.

3.2.2 Bailer and Bailer Rope

Bailers should be single-use, disposable and should not be reused. Bailer rope should consist of a heavy-duty string or twine and should be kept in a sterile environment such as a plastic bag. The rope should never touch the ground or other contaminated surface during sampling.

3.2.3 Field Filtration Apparatus

If filtration of samples is necessary, then the filtration kit must be used. Non-reusable filters and sample containers are a one-piece unit, which need no decontamination.

3.2.4 Water-Level Indicator

The water level indicator is probably the most heavily used piece of equipment that Lee & Ryan owns. Due to the frequency of use and its inherent use, the water level indicator is also the one piece of equipment that presents the most likelihood of cross-contamination; therefore, it is critical that the user always properly decontaminates this piece of equipment. The following procedure shall be used:

1. Once the static water level has been recorded, withdrawal the entire length of tape, including the probe. Care should be exercised so that the part of the tape that entered the well does not get placed back on the spool until properly decontaminated.
2. Paper towels should be used to wipe all water and/or sediment off of the tape and probe. Following this, 2-propanol is sprayed onto both sides of the tape and probe. It is critical that latex gloves and safety glasses are worn when using 2-propanol. The paper towels are used to wipe down the tape starting at the top and working toward the bottom of the probe. If a strong odor is noted from the probe upon retrieval from the well, the decontamination procedure should be repeated. The paper towels should be disposed of after each wipe. New towels should be used on each well.

3.2.5 Water/Product Interface Probe

The water/product interface probe should be decontaminated in the same manner as the static water level meter. It is important to note that the interface probe is to be used only on wells with product present. Due to product being in contact with the probe and tape, the possibility of cross-contamination would be very high if the interface probe were used in wells without product present.

3.2.6 Sample Bottles

All sample bottles are pre-cleaned at the laboratory and do not require cleaning. Sample bottles should be used directly as obtained from the laboratory. The reuse of sample bottles is not acceptable.

3.3 Field Decontamination of Drilling Equipment

3.3.1 To reduce the chance of cross-contamination between boreholes, hollow-stem augers, drill rods, bits, core barrels, the outer surfaces of submersible pumps and associated hoses and lines, and portions of the drill rig contacting potentially contaminated material are decontaminated between holes following Steps 1-3 of Table 3.1. Backhoes should be similarly cleaned between test pits. The insides of pumps and hoses should be flushed between uses with at least 20 gallons of potable water.

3.3.1.1 Before entering and leaving the site, the drill rig or backhoe should be thoroughly cleaned by removing all soil with a high-pressure water wash and then steam cleaning exterior surfaces. The cleaning should be performed on a decontamination pad or in an area where wash water can be readily collected and containerized.

3.3.1.2 To prevent down-hole contamination of soil and rock samples, the split-spoon sampler and core barrel must be disassembled and thoroughly cleaned before each sampling. The decontamination procedure for all sampling tools consists of Steps 2-9 of Table 3.1. Step 4 may be eliminated if metals are not analyzed, and Step 6 and 7 may be eliminated if organics are not analyzed.

3.3.1.3 All wash and rinse water and spent solvents (if necessary) from on-site decontamination must be containerized in properly labeled 55-gallon drums or other suitable containers and stored in a designated area pending analysis and ultimate disposal.

3.4 Water Sampling Equipment

Except for submersible pumps (3.2.1), sampling equipment inserted into monitoring wells must be cleaned prior to each use following Steps 2-9 of Table 3.1.

3.4.1 Whenever possible, dedicated bailers should be used for sampling. This practice minimizes the chances of cross-contamination among boreholes. The use of disposable sampling equipment reduces the volume of de-ionized water carried into the field and time-consuming decontamination procedures. The need for collecting, characterizing, and disposing of contaminated wash water, rinsate, and spent solvents (if necessary) and for collecting all equipment blanks for analysis is also obviated.

3.4.2 To minimize equipment contamination during use, sampling operations may be conducted upon clean, disposable plastic sheeting or drop cloths. If prior knowledge of site conditions is available, sampling should commence at the least contaminated area and proceed to the most contaminated areas to reduce cross-contamination, particularly if reusable sampling equipment is employed.

3.5 Special Conditions

When sampling equipment is severely contaminated with viscous, adhesive organics such as oil, special decontamination procedures are followed. Lee & Ryan's SOP is to add steps 6 and 7 (successive solvent and de-ionized-water rinses) to the decontamination sequence in Table 3.1 under such conditions. Histological-grade 2-Propanol is usually sufficient to remove most organics. Equipment (rinsate) blanks should be collected frequently under such sampling conditions.

TABLE 3.1 - GENERALIZED DECONTAMINATION PROCEDURES

Step	Procedure
1	Steam clean exposed surfaces.
2	Scrub all parts with a low-phosphate detergent solution in potable water.
3	Rinse all parts twice with potable water. Wash all parts once with histological-grade isopropyl alcohol (2-Propanol).
4	Rinse all parts with 10% reagent-grade nitric or hydrochloric-acid solution.
5	Rinse all parts with ASTM Type-II or better grade de-ionized water.
6	Rinse all parts twice with histological-grade isopropyl alcohol (2-Propanol) or other organic solvents specified in the project work plan.
7	Rinse all parts with ASTM Type-II or better grade de-ionized water.
8	Allow to air dry in an uncontaminated area.
9	Store/wrap in clean plastic or heavy-gauge aluminum foil during transport and storage.

Note: Step 4 may be eliminated if metals are not analyzed. Steps 6 and 7 may be eliminated if viscous, adhesive organic compounds are not analyzed.

4.0 Roles & Responsibilities

Roles	Responsibilities
Project Manager:	• Develop site sampling plan (including Quality Assurance Project Plan (QAPP).
Field Technician:	• Determine what equipment needs decontaminated.
	• Set up a rinsate water collection system.
	• Decontaminate all non-dedicated sampling equipment.
	• Record all information on field sheets and/or logbook.
	• Contact PM regarding decontamination water disposal.

5.0 Attachments

This SOP will be used in conjunction with the attachments described below. These attachments must be used by all Lee & Ryan staff.

Title	Description
1) SOP - Equipment Decontamination (362.10)	• Outlines the process used for decontaminating filed equipment after use.
2) SOP - Sample Packaging and Shipping (346.10)	• Outlines how to properly place sample containers in a temperature controlled cooler.
3) SOP - Chain-of-Custody Use (346.20)	• Outlines how to properly complete a

	chain-of- custody form for collected samples.

6.0 Equipment

6.1 The following major items are commonly required for decontaminating equipment used in the field. The list is not exhaustive and other items may be needed for project-specific decontamination requirements.

1. Drums (55-gallon) or other suitable containers for wash and rinse water.
2. Brushes and low-phosphate detergent (e.g. Alconox®).
3. Paper towels.
4. Plastic bags to double-bag disposable items.
5. Appropriate solvents (isopropanol, methanol, hexane, acetone, nitric, or hydrochloric acid, de-ionized or distilled water, etc.).
6. Pails, trays, tubs, squeeze bottles, and other containers.
7. Steam generator or other appropriate water-heating equipment (may be the responsibility of drilling or construction contractor).
8. Plastic ground sheeting.

7.0 Quality Control

7.1 General QA/QC Procedures

7.1.1 All data and or procedures must be documented on field data sheets and/or Field logbook.

8.0 Health & Safety

8.1 When working with potentially hazardous materials, employees should follow the Lee & Ryan *Corporate Health and Safety Manual*. More specifically, depending on the site-specific contaminates, various protective programs must be implemented prior to sampling. The site health and safety plan should be reviewed with specific emphasis placed on the protection planned for the sampling task. Standard safe operating practices should be followed such as minimizing contact with potential contaminates in both the vapor phase and solid matrix through the use of a respirator and protective disposal clothing.

1.0 Purpose

This Standard Operating Procedure (SOP) describes the process for preparation of field quality control samples for the soil matrix. This SOP, which may be varied or changed as required, is dependent upon site conditions, equipment limitations or limitations imposed by the procedure. In all instances, the ultimate procedure employed should be documented and provided in the final report.

2.0 Scope

2.1 Quality control (QC) sampling should be performed in the field at a specified frequency in order to detect superfluous sample contamination. These samples are not part of the laboratory QA/QC program and are treated by the laboratory simply as environmental samples. QC samples consist of blanks and duplicate samples.

Blank samples are a means of controlling and evaluating the level of sample contamination and variability due to potential artifacts and interferences arising at any point in the measurement process. The various types of blank samples (equipment and trip blanks) are designed to measure: (1) the integrity of sample container and the effectiveness of sampling equipment cleaning; (2) the actual sample collection process; (3) the purity of sample preservatives, additive reagents, and analyte-free water; (4) the influence of site environmental conditions; (5) cross-contamination of samples; and (6) indeterminate artifacts introduced during the transport of samples from sample and shipping containers, sample preservatives, cleaning agents, and sampling equipment. All blanks must be composed of analyte-free water from the same source, which should be ASTM Type-II or better grade de-ionized water.

3.0 Requirements

3.1 Trip (Travel) Blank

The trip blank is normally specified when volatile and semi-volatile contaminants are tested in a water sample matrix. The purpose of the trip blank is to check the integrity of the sample handling, transport and shipping procedures. A trip blank consists of analyte-free water in containers identical to those used to collect samples for laboratory analyses. The containers are filled and sealed in the laboratory. They remain sealed and accompany all samples and empty sample containers during collection and

transport. **One trip blank per sample storage/shipping container (e.g., a cooler) is customary**. The trip blanks are analyzed for the same volatile and semi-volatile constituents as the environmental samples to determine if atmospheric contaminants have seeped through septa seals, if cross contamination has occurred among samples during shipping and storage, if the source of the blank water is contaminated, or if the containers were improperly cleaned.

3.2 Equipment (Rinsate) Blank

A rinsate blank is normally prepared for each parameter group and each matrix sampled each day in the field. **The equipment blank is only collected if non-dedicated sampling equipment is decontaminated and reused. Normally during sampling of monitoring wells only, this would indicate that we would need one (1) equipment blank per site per sampling event.** Equipment blanks are not required for dedicated or disposable sampling equipment. The equipment blank is prepared in the field by collecting, in the appropriate container for each parameter group, an analyte-free water rinse from the equipment (water level meter probe, bailer, pump tubing, spoon, auger, acetate liner, etc.) after the last step of the field decontamination protocol has been completed. Preservatives or additives must be added to the equipment blank when appropriate for the parameter group. The purpose of the equipment blank is to check the integrity of sampler decontamination and estimate the degree of contamination introduced by sample collection and environmental interference on the site. Equipment blanks include the sources of contamination addressed by the trip (travel) blanks.

3.3 Field Duplicate Samples

Field Duplicate Samples of all matrices for all parameter groups should be taken in the field at the frequency required by the agency to which the work will be reported. In lieu of set agency standards, field duplicate samples should be collected at a frequency of at least one (1) duplicate sample per 20 environmental samples. The duplicate analyses provide a measure of any inadvertent contamination during the sampling process and also provide an indication of analytical variability**. Duplicate samples are collected at the time the initial soil or ground water is collected and is identified with a fictitious designation so the duplicate analytical results are not subject to laboratory bias**. If reporting requirements necessitate a laboratory Level IV data package for QA/QC purposes, additional samples (Matrix Spike/ Matrix Spike Duplicate) would be collected from an area believed to have minimal contamination and submitted for laboratory analysis. The sample is labeled as a MS/MSD sample for laboratory submittal.

****The field duplicate shall be collected in the most contaminated area on the site.****

4.0 Roles & Responsibilities

Roles	Responsibilities
Project Manager:	• Develop site sampling plan (including Quality Assurance Project Plan (QAPP)
Field Technician:	• Checkout all equipment needed for sampling activities.
	• Collect samples per the approved sampling plan.
	• Record all information on field sheets and/or logbook.
	• Prepare samples for delivery to the laboratory and complete the chain of custody form.

5.0 Attachments

This SOP will be used in conjunction with the attachments described below. These attachments must be used by all Lee & Ryan staff.

Title	Description
1) SOP - Equipment Decontamination (362.10)	• Outlines the process used for decontaminating filed equipment after use.
2) SOP - Sample Packaging and Shipping (346.10)	• Outlines how to properly place sample containers in a temperature controlled cooler.
3) SOP - Chain-of-Custody Use (346.20)	• Outlines how to properly complete a chain-of- custody form for collected samples.

6.0 Equipment

6.1 Equipment Checklist

6.1.1 Field book

6.1.2 Field data sheets and sample labels

6.1.3 Chain-of-Custody forms

6.1.4 Sample containers

6.1.5 Sample coolers

6.1.6 Decontamination solution

6.1.7 Tap water

6.1.8 Distilled or deionized water

6.1.9 Brushes and buckets

6.1.10 Sample collection equipment

6.1.11 Appropriate health and safety gear

7.0 Quality Control

7.1 General QA/QC Procedures

7.1.1 All data must be documented on the field data sheets and/or the field logbook

7.1.2 The collection of equipment blanks is recommended to evaluate the potential for cross-contamination if sampling equipment is to be reused between sampling points.

8.0 Health & Safety

8.1 When working with potentially hazardous materials, employees should follow the Lee & Ryan Corporate *Health and Safety Manual*. More specifically, depending on the site-specific contaminates, various protective programs must be implemented prior to sampling. The site health and safety plan should be reviewed with specific emphasis placed on the protection planned for the sampling task. Standard safe operating practices should be followed such as minimizing contact with potential contaminates in both the vapor phase and solid matrix through the use of a respirator and protective disposal clothing.

1.0 Purpose

This Standard Operating Procedure (SOP) describes the process of documenting information in the field using a field logbook and field sheets.

2.0 Scope

2.1 Field documentation procedures for recording field logbooks and additional project forms.

3.0 Requirements

3.1 Field Logbook

3.1.1 Lee & Ryan work plans stipulate that a bound, waterproof logbook of sampling activities is the only acceptable form of record keeping.

3.1.2 A field logbook is maintained by each individual who performs field activities. The bound logbook contains a daily field log of the work in progress. Logbook entries should be completed in indelible ink.

3.1.3 Field logbook entries should include the following information:

- Date;
- Project Number and Site location;
- Arrival and departure times of all Lee & Ryan staff and subcontractors;
- Page number and total number of pages in the project entry;
- Description of field activities for the project;
- Weather conditions;
- Unique, sequential sample identification numbers;
- Matrix being sampled (ground water, soil, etc.);
- Sample depth;
- Sample date and time;
- A description of the specific sampling location in sufficient detail to allow re-sampling at the same location (i.e. sample location map);
- Method of sampling;
- Preservation techniques, including filtration, as appropriate for separate sample aliquots;

- Analytes of interest;
- The volume of water removed during well purging;
- Significant observations made during the sampling process;
- Results of any field measurements, such as depth to water, temperature, specific conductance, and pH;
- Printed names or initials of the person(s) performing the sampling;
- Any other pertinent Site information; and
- Summary of conversations in the field with clients or regulators.

3.1.4 Complete information must be entered so that what was done, by whom, when, and what the results were can be determined.

3.1.5 Prior to departure from the Site, entries into the field logbook should be signed by Lee & Ryan staff.

3.1.6 Corrections to the field logbook are made by drawing one line through the incorrect entry, entering the correct information, and initialing and dating the change.

3.1.7 At the end of a project, the field logbook and all project-specific logs, forms, and notes are forwarded to the Lee & Ryan project file. Copies of each page of the field logbook for each project are to be made and placed in the file.

3.1.8 Upon departure from Lee & Ryan, the employee must surrender the field logbook to their supervisor. The field logbook is considered the property of Lee & Ryan.

3.2 Additional Project Forms

3.2.1 Loose sheets may be used (as supplementary information) as long as each page of the notes and copies of each page of the field logbook are kept in the project file (additional forms may include field boring logs, well construction forms, pilot study sheets, groundwater sampling field sheet, chain-of-custody, or other project forms).

3.2.2 Additional forms should be checked, signed, and dated.

3.2.3 At the end of a project, all project-specific logs, forms, and notes should be forwarded to the Lee & Ryan project file. Copies of each page of the field logbook for each project are to be made and placed in the project file.

4.0 Roles & Responsibilities

Roles	Responsibilities
Project Manager:	• Review project and provide project forms to field technician.
	• Review logbook entries and project forms for completeness and accuracy prior to being placed into the project file.
Field Technician:	• Record Site information in the field logbook and project forms.
	• Review and sign field logbook and project forms.
	• Add a copy of the field logbook entries and project forms to the project file.

5.0 Attachments

This SOP will be used in conjunction with the following attachments. These attachments must be used by all Lee & Ryan staff.

Title	Description
1) SOP - Sample Packaging and Shipping (346.10)	• Outlines procedures for managing samples while in the custody of a Lee & Ryan staff person.

6.0 Equipment

6.1 Field logbook.

6.2 Chain-of-custody forms.

6.3 Project forms.

7.0 Quality Control

7.1 The project manager shall review field logbook entries and project forms for accuracy and completeness prior to adding to the project file.

8.0 Health & Safety

8.1 Not Applicable

1.0 Purpose

The purpose of this Standard Operating Procedure (SOP) is to set guidelines for the proper documentation using photographs. Appropriate applications are, but not limited to: damaged well vaults, damaged concrete, recovered free product, soil lithology, recently installed wells, new construction, marked utilities, excavations, excavation boundaries, etc. This standard operating procedure may be varied or changed as required, dependent on site conditions, and equipment limitations.

2.0 Scope

2.1 Generally, the use of photographic documentation is used as visual evidence to support findings from the field.

3.0 Requirements

3.1 **Preparation**

3.1.1 Properly check out a camera by signing the “Digital Camera Sign Out Sheet.”

3.1.2 Once onsite, determine the number of objects that require photographic documentation and, if applicable, the most appropriate angles to include important site features.

3.2 **Preparation for documenting damage to well vaults and/or concrete pads**

3.2.1 Generally, a white, letter-sized sheet of paper should be used to help label the structure being photographed.

3.2.2 At a minimum, the label should include the site name and number, well identification, and the date the photograph was taken.

3.3 **Procedure for photographing damaged well vaults and/or concrete pads**

3.3.1 Using the white, letter-sized label prepared in step 3.2, place the label near the object being photographed. Be sure not to cover any important features of the object.

3.3.2 Attempt to capture the entire well vault, concrete and label in each picture frame,

3.3.3 mmediately, after the picture has been taken with the digital camera, confirm the writing on the label can be easily read.

3. **Procedures for general photography**

3. .1 very attempt should be made to include important site features in each picture frame. ost site features are permanent and easily recognizable. Points of reference are vital for future use. (xamples of recognizable site features are, but not limited to, buildings, gas pumps, canopy supports, tank pits, sidewalks etc.)

3. .2 efrain from taking pictures directly into a bright light source

3. **Procedures for returning the camera**

3. .1 The camera should be checked in by signing the "Digital Camera Sign Out Sheet"

3. .2 After it has been properly checked in the camera should be given to the appropriate personnel.

4.0 Roles & Responsibilities

Roles	Responsibilities
All ee yan personnel	• Take photographic documentation

5.0 Attachments

This SOP will be used in conjunction with the following attachments. These attachments must be used by all ee yan staff.

Title	Description
1) Site Specific ealth Safety Plan	Gives specific site information as it relates to health and safety procedures.
2) ield otebook	To record objects included in the photographic documentation

6.0 Equipment

.1 A suitable high quality digital camera is preferred however, a disposable camera can be used as a last resort. The camera should be set on the instruments highest quality.

.1.1 echargeable batteries

.1.2 Pre-made labels or white paper and permanent markers

7.0 Quality Control

.1 All data must be documented on field data sheets, groundwater level data forms, or within personal or site logbooks.

.2 All instrumentation must be operated in accordance with operating instructions as supplied by the manufacturer, unless otherwise specified in the work plan.

8.0 Health & Safety

.1 The appropriate personal protective equipment must be utilized for onsite activities according to the current approved site ealth Safety Plan.

1.0 Purpose

This Standard Operating Procedure (SOP) describes the process for preparing the samples for shipment.

2.0 Scope

2.1 This SOP should be used for packing and shipping A samples.

2.2 This SOP ensures that that the samples are handled properly and protected during shipment transport therefore, reducing the risk of cross-contamination and breaking sample bottles.

3.0 Requirements

3.1 ine the cooler with bubble wrap.

3.2 Place samples in bubble pack bags.

3.3 Place bubble pack in iploc bag and seal.

3.4 Put ice in the cooler.

3.5 Place the iploc bag(s) containing samples on ice.

3.6 Cooler(s) should be transported to the laboratory following sampling activities or transported from the ee yan office via a courier to the laboratory within the appropriate hold times.

3.7 The sample cooler(s) should be relinquished to the laboratory or to the courier via the chain-of-custody.

3.8 The signed chain-of-custody should go in a separate iploc bag and placed in the cooler.

3.9 The cooler should be taped shut before transport with a custody seal.

3.10 The courier should relinquish the cooler(s) to the laboratory via the chain-of-custody.

4.0 Roles & Responsibilities

Roles	Responsibilities
ield Technician Sampler	• Packs the cooler according to this SOP.

5.0 Attachments

This SOP will be used in conjunction with the following attachments. These attachments must be used by all ee yan staff.

Title	Description
1) SOP - Sample Chain-of-Custody Documentation (3 .2)	This SOP documents the process that is used to fill out the Chain-of-Custody.

6.0 Equipment

6.1 ab designated cooler.

6.2 Bubble packs and bubble wrap.

6.3 iploc bags.

6.4 ce.

6.5 Packing tape.

6.6 Custody seals.

7.0 Quality Control

7.1 General QA/QC Procedures

All information placed on custody seals and chain-of-custody documentation data must match documented on field data sheets and or field logbook as specified in SOP 32 .3 for ield Documentation Procedures.

8.0 Health & Safety

8.1 hen working with potentially hazardous materials, employees should follow the ee yan *Corporate Health and Safety Manual*. ore specifically, depending on the site-specific contaminates, various protective programs must be implemented prior to sampling in a site-specific health and safety plan. The site health and safety plan should be reviewed with specific emphasis placed on the protection planned for the sampling task. Standard safe operating practices should be followed during the sample packaging and shipping process such as minimizing contact with potential contaminates in both the vapor phase and solid matrix through the use of a respirator, protective disposal clothing, or other means necessary to reduce the risk of exposure.

1.0 Purpose

This Standard Operating Procedure (SOP) describes the process for completing a chain-of-custody when sending field samples to the lab for analysis.

2.0 Scope

2.1 The chain-of-custody (COC) provides a mechanism for tracing the possession, handling, and routing of a sample from the time it is collected, through analysis in the laboratory and to admission to court, if necessary.

2.1.1 The COC shall be filled out for all samples collected and submitted to a laboratory or other type of testing facility, or when ee yan transfers possession of the samples to anyone or entity.

3.0 Requirements

3.1 COC orm

3.1.1 The COC record accounts for each sample and provides the following information: sample identification, signature of collector, date and time of collection, sample type (e.g., groundwater, soil, wastewater), identification of well, number of containers, parameters requested for analyses, signatures of person(s) involved in the chain of possession, relinquished date(s) and time of possession, and problems encountered and deviations from established sampling protocol.

3.2 **Procedure**

3.2.1 mmediately following each sample collection and container labeling, the sample is logged on the COC in the order of the time of sampling.

3.2.2 This process is done for all samples until all samples have been collected. The method of shipment, courier name(s), and other pertinent information are entered in the “remarks” box or other designated area on the form.

3.2.3 Once all samples are logged, the field technician checks to make sure all necessary items on the COC are marked or otherwise completed, and a purchase order is

completed for the appropriate laboratory with an expense sheet and a breakdown of price for the corresponding analysis.

3.2. Once the COC is completed, it is scanned and saved to the electronic project folder designated in the ( ): drive Projects folder Project number folder applicable subfolder.

3.2. The ield Technician will pack the completed COC in a iploc bag in the cooler for shipping.

3.2. A copy of the COC goes to the nvironmental Administrative Assistant for hardcopy filing in the project file.

4.0 Roles & Responsibilities

Roles	Responsibilities
ield Technician O	• To fill out the COC completely. • To fill out an internal purchase order. • Scan the COC and save to the project file. • Pack the COC with the samples prior to shipping.
nvironmental Administrative Assistant	• ile the hardcopy COC in the project file.

5.0 Attachments

This SOP will be used in conjunction with the following attachments. These attachments must be used by all ee yan staff.

Title	Description
1) SOP Sample Packaging and Shipping (3 .1)	• This SOP documents the process for packing samples in the cooler prior to shipping.

6.0 Equipment

6.1 There is no specific equipment needed for filling out a COC.

7.0 Quality Control

7.1 The Project anager is responsible for determining whether proper custody procedures were followed during field activities.

8.0 Health & Safety

8.1 There are no specific ealth Safety procedures for this SOP.

1.0 Purpose

The objective of this standard operating procedure (SOP) is to provide general reference information on sampling of ground water wells. These are standard (i.e., typically applicable) operating procedures, which may be varied or changed as required, dependent upon site conditions, equipment limitations, or limitations imposed by the procedure. n all instances, the ultimate procedures employed should be documented and associated with the final report.

2.0 Scope

2.1 To ensure the collection of a groundwater well sample should be sensitive, highly developed, and quality assured.

3.0 Requirements

3.1 Preparation

3.1.1 Determine the extent of the sampling effort, the order of sampling, the sampling methods to be employed, and the types and amounts of equipment and supplies needed (i.e., diameter and depth of wells to be sampled).

3.1.2 Obtain necessary sampling and monitoring equipment, appropriate to type of contaminant being investigated. or collection of volatile organic samples, refer to the work plan to ensure that m glass sample vials with Teflon lines septa are ordered and in sufficient numbers. Due to the extreme trace levels at which volatile organics are detectable, cross contamination and introduction of contaminants must be avoided. Trip blanks are incorporated into the shipment package to provide a check against cross contamination.

3.1.3 Decontaminate or pre-clean equipment, and ensure that it is in working order.

3.1. Perform a general site survey prior to site entry in accordance with the site specific ealth Safety Plan.

3.1. dentify and mark all sampling locations.

3.2 Field Preparation

3.2.1 Start at the least contaminated well, if known.

3.2.2 On the wells being sampled, remove the locking well cap and note the location time of day, and date in a field notebook or appropriate log form.

3.2.3 emove well casing cap on all wells being sampled. Before sampling, allow at least **30** minutes for the water level to equilibrate.

3.2. After putting on a clean pair of latex gloves, screen headspace of well with an appropriate monitoring instrument to determine the presence of volatile organic compounds and record in site logbook.

3.2. ower water level measuring device into well until water surface is encountered.

3.2. easure distance from water surface to reference measuring point on the northern portion of the well casing or protective barrier post and record in site logbook. Alternatively, if no reference point, note that water level measurement is from top of steel casing, top of P C riser pipe, from ground surface, or some other position on the well head. f floating organics are of concern, this can be determined by measuring the water level with an oil water interface probe which measures floating organics.

3.2. At least annually, measure the total depth of the well (at least twice to confirm measurement) and record in site logbook or on field data sheet.

3.2. Calculate the volume of water in the well and the volume to be purged using appropriate calculations (see ield Sheet).

3.2. Select the appropriate purging and sampling equipment.

3.3 Purging with Bailers

3.3.1 Determine the volume of water to be purged as described in 3.2. .

3.3.2 ake sure the bailer line does not touch the ground.

3.3.3 Attach the line to the bailer and slowly lower until the bailer is completely submerged, being careful not to drop the bailer to the water, causing turbulence and the possible loss of volatile organic contaminants.

3.3. Pull bailer out ensuring that the line never touches the ground.

3.3. mpty the bailer into a pail until full to determine the number of bails necessary to achieve the required purge volume.

3.3. Thereafter, pour the water into a container and dispose of purge waters as specified in the site-specific sampling plan.

3.4 Sampling

3. .1 Surround the monitoring well with clean plastic sheeting.

3. .2 Attach a line to a clean decontaminated bailer.

3. .3 ower the bailer slowly and gently into the well, taking care not to shake the casing sides or to splash the bailer into the water. Stop lowering at a point adjacent to the screen.

3. . Allow bailer to fill and then slowly and gently retrieve the bailer from the well avoiding contact with the casing, so as not to knock flakes of rust or other foreign materials into the bailer.

3. . emove the cap from the sample container and place it on the plastic sheet or in a location where it won t become contaminated.

3. . Begin slowly pouring from the bailer.

3. . ilter and preserve samples as required by the sampling plan.

3. . Cap the sample container tightly and place prelabeled sample container in a carrier.

3. . eplace the well cap.

3. .1 og all samples in the site logbook and on field data sheets and label all samples.

3. .11 Package samples and complete necessary paperwork.

3. .12 Transport sample to decontamination zone for preparation for transport to analytical laboratory.

3.5 Post Operation

After all samples are collected and preserved, the sampling equipment should be decontaminated prior to sampling another well to prevent cross-contamination of equipment and monitor wells between locations.

3. .1 Decontaminate all equipment.

3. .2 eplace sampling equipment in storage containers.

3. .3 Prepare and transport groundwater samples back to ee yan to be picked up by the laboratory. Check sample documentation and make sure samples are properly packed for shipment.

4.0 Roles & Responsibilities

Roles	Responsibilities
ield Technician:	• Checks out all equipment needed for sampling activities. • Samples the monitoring well(s). • ecords all information on field sheets or logbooks. • Packs samples to go to laboratory.

5.0 Attachments

This SOP will be used in conjunction with the following attachments. These attachments must be used by all ee yan staff.

Title	Description
1) Decontamination SOP	• Outlines the process used for decontaminating equipment after use.
2) Site Specific ealth Safety Plan	• Contains site specific information as it relates to ealth Safety

6.0 Equipment

6.1 Equipment Checklist

.1.1 ater level indicator

.1.2 Appropriate keys for well cap locks

.1.3 Steel brush

.1. ield book

.1. Calculator

.1. ield Data Sheets and sample labels

.1. Chain of Custody records and seals

.1. Sample containers

.1. Sharp knife with locking blade

.1.1 Toolbox, including screwdrivers, pliers, hacksaw, hammer, flashlight, and adjustable wrench.

.1.11 eather work gloves

.1.12 Appropriate health and safety gear

.1.13 ive gallon bucket

.1.1 ab coolers

.1.1 Packing materials

.1.1 Bolt cutters

.1.1 iploc plastic bags

.1.1 Containers for evacuation liquids

.1.1 Decontamination solutions

.1.2 Tap ater

.1.21 on-phosphate soap

.1.22 Brushes

.1.23 Buckets

.1.2 Aluminum foil

.1.2 Garden sprayer

.1.2 Distilled or deionized water

6.2 Bailers

.2.1 ew bailers of appropriate size and construction material for each well.

.2.2 ylon line, enough to dedicate to each well

.2.3 Teflon coated bailer wire

.2. Aluminum foil (to wrap clean bailers)

.2. ive ( ) gallon bucket

7.0 Quality Control

7.1 General QA/QC Procedures

.1.1 All data must be documented on field data sheets or within site logbooks.

.1.2 All instrumentation must be operated in accordance with operating instructions as supplied by the manufacturer, unless otherwise specified in the work plan. quipment checkout and calibration activities must occur prior to sampling operation and they must be documented.

.1.3 The collection of equipment blanks is recommended to evaluate potential for cross contamination from the purging and or sampling equipment.

.1. Trip blanks are required if analytical parameters include OAs.

8.0 Health & Safety

8.1 hen working with potentially hazardous materials, employees should follow ee yan s *Corporate Health & Safety Manual* procedures. ore specifically, depending on the site-specific contaminants, various protective programs must be implemented prior to sampling the first well. The site health and safety plan should be reviewed with specific emphasis placed on the protection program planned for the well sampling tasks. Standard safe operating practices should be followed such as minimizing contact with potential contaminants in both the vapor phase and liquid matrix through the use of respirators and disposable clothing.

.1.1 orking around volatile organic contaminants

.1.1.1 Avoid breathing constituents venting from the well.

.1.1.2 Pre-survey the well headspace with an D P D prior to sampling as needed, if applicable.

.1.1.3 f monitoring results indicate organic constituents, sampling activities may be conducted in evel C protection. At a minimum, skin protection will be afforded by disposable protective clothing.

8.2 Physical Hazards

.2.1 ifting injuries associated with pump and bailers retrieval moving equipment.

.2.2 Use of pocketknives for cutting discharge hose and bailer rope.

.2.3 eat cold stress as a result of exposure to extreme temperatures and protective clothing.

.2. Slip, trip, fall conditions as a result of pump discharge.

.2. estricted mobility due to the wearing of protective clothing.

.2. lectrical shock associated with use of submersible pumps is possible. Use a G C or a copper-grounding stake to avoid this problem.

1.0 Purpose

The purpose of this Standard Operating Procedure (SOP) is to set guidelines for the determination of the depth to water and separate phase chemical product (i.e., gasoline, oil, PC , TC) in an open borehole, cased borehole, monitoring well, or piezometer. This standard operating procedure may be varied or changed as required, dependent on site conditions, and equipment limitations. n all instances, the actual procedures employed will be documented and described in an appropriate site report.

2.0 Scope

2.1 Generally, water-level measurements taken in boreholes, piezometers, or monitor wells are used to construct water table or potentiometric surface maps and to determine flow direction as well as other aquifer characteristics.

3.0 Requirements

3.1 **Preparation**

3.1.1 Determine the number of measurements needed, the methods to be employed, and the equipment and supplies needed.

3.1.2 Decontaminate or pre-clean equipment, and ensure that it is in working order.

3.1.3 Coordinate schedule with staff, clients, and regulatory agency, if appropriate.

3.1. f this is an initial visit, perform a general site survey prior to site entry in accordance with the current approved site specific ealth and Safety Plan.

3.1. dentify sampling locations.

3.2 **Procedures**

3.2.1 f possible, and when applicable, start at those wells that are least contaminated and proceed to those wells that are most contaminated.

3.2.2 Clean all the equipment entering the well(s) according to the SOP number .

3.2.3 emove locking well cap, note well D, time of day, and date in field notebook or an appropriate groundwater level data form.

3.2. emove any water from the well vault using a disposable cup or jar.

3.2. emove any debris or buildup from the well vault lip to ensure a tight seal between the lid, the gasket, and the well vault.

3.2. emove well cap. Place the cap upside down on top of the well vault lid. nsure the well cap does not come in contact with any surface that could potentially cause cross contamination.

3.2. f required by site-specific condition, monitor headspace of well with a photoionization detector (P D) or flame ionization detector (D) to determine presence of volatile organic compounds, and record results in field notebook.

3.2. isually check for any physical changes, such as erosion or cracks in the protective concrete pad or if the well vault has broken brackets record notes in the field notebook or on groundwater level data form. Utilize photo documentation according to the SOP number

3.2. ower water-level measuring device into the well. lectrical tapes are lowered to the water surface whereas chalked steel tapes are lowered generally a foot or more below the water surface. Steel tapes are generally chalked so that a 1-to -foot long section will fall below the expected water level.

3.2.1 or electrical tapes, record the distance from the water surface, as determined by the audio signal or meter, to the reference measuring point and record in the field notebook. or chalked tapes, an even foot mark is held at the reference point, once the chalked section of the tape is below the water level. Both the water level on the tape and the foot mark held at the reference point is recorded. The depth to the water is then the difference between the two readings. n addition, note the reference point used (top of the outer casing, top of the riser pipe, ground surface, or some other reproducible position on the well head). Typically, the reproducible position is the north side of the top of the riser pipe. f the top of the riser pipe is significantly notched or marked use that designated reproducible position as the measuring point. epeat the measurement to verify the depth to water and or separate phase chemical product.

3.2.11 **Procedure to measure the well depth:** (f applicable by site-specific condition) or electrical tapes, turn the power off to eliminate audio signal, record the distance from the bottom of the well, as determined by the point of contact with the bottom of the well,

to the reference measuring point and record in the field notebook. epeat the measurement to verify the depth to the bottom of the well. easuring the well depth is site specific and the project manager should be consulted before the well depth is measured.

3.2.12 Decontaminate all down hole equipment as it s removed from the well. isually check the probe for any foreign substances and decontaminate thoroughly if necessary. Store equipment for transport to the next well. Decontaminate all equipment according to the SOP number

3.2.13 f there is build up on the well cap or the P C use a paper towel and clean thoroughly. Be sure not to introduce any foreign substances into the well during this process

3.2.1 eplace well cap securely if a sample will not be collected from that location. f a sample is required loosely set the well cap on top of the P C of the well and place the steel lid upside down on the well vault, the bolts should then be set on top of the well lid. f there is precipitation or expected, anytime during the sample event all well caps must be securely placed in the well.

4.0 Roles & Responsibilities

Roles	Responsibilities
ield Technician	• Take water level measurements

5.0 Attachments

This SOP will be used in conjunction with the following attachments. These attachments must be used by all ee yan staff.

Title	Description
1) Site Specific ealth Safety Plan	Gives specific site information as it relates to health and safety procedures.
2) Groundwater evel Data orm	To record groundwater level data

6.0 Equipment

.1 The electric water level indicator and the chalked steel tape are the devices commonly used to measure water levels. Both have an accuracy of . 1 feet. Other field equipment may include:

.1.1 Air monitoring instrumentation

.1.2 ell depth measurement device

.1.3 Chalk

.1. uler

.1. ield otebook

.1. Paper towels and trash bags

.1. Decontamination supplies

.1. Groundwater level data forms

7.0 Quality Control

.1 All data must be documented on field data sheets, groundwater level data forms, or within personal or site logbooks.

.2 All instrumentation must be operated in accordance with operating instructions as supplied by the manufacturer, unless otherwise specified in the work plan.

.3 ach well should be tested at least twice in order to compare results. f results do not agree to within . 2 feet, a third measurement should be taken and the readings averaged. Consistent failure of consecutive readings to agree suggests that levels are changing because of one or more conditions as indicated in Section 1.

8.0 Health & Safety

.1 The results of monitoring the well head and breathing zone with a D or P D, as per section 3.2. , may indicated the need to upgrade the personal protection level according to the current approved site ealth Safety Plan.

1.0 Purpose

This Standard Operating Procedure (SOP) provides guidelines for collecting surface soil samples when drilling methods are not employed. Surface soil samples are considered those samples which are collected from the surface to a depth of two (2) feet below grade.

2.0 Scope

2.1 Project Work Plan

2.1.1 The project work plan will specify the appropriate sampling locations and techniques. Sampling locations representative of the investigation area must be chosen in some instances, a statistical procedure may be employed to identify the sampling locations and number of samples.

2.2 Soil Sampling Locations

2.2.1 All soil sampling points must be marked with a stake, which is labeled with an identification number. The sampling sites should be described in the field logbook and a location sketch provided. Prior to sampling, surface vegetation, rocks, pebbles, leaves, and debris are cleared from the sampling point to allow for the collection of representative soil samples.

2.3 Sample Management

2.3.1 Soil samples must be placed in containers appropriate for the analytical parameter or parameter group of interest. Pre-cleaned containers are provided by the laboratory engaged for the chemical analyses. Samples for organic and inorganic chemical analyses are placed in clean, wide-mouth, amber glass bottles with Teflon -lined lids. Samples for volatile organic compounds (OCs) are placed in septum-sealed vials or containers appropriate for the particular analytical method. The sample bottles must be labeled in accordance with ee yan applicable SOPs. The sample bottles are placed in an insulated, temperature controlled (C) cooler or chest immediately after sampling (SOP 2.) and delivered to the testing laboratory as soon as possible. Standard chain-of-custody protocols are observed per ee yan s applicable SOP.

3.0 Requirements

There are no requirements associated with this SOP however, the Project anager, ield Technician, and or ield Team may establish requirements prior to or during the implementation of the site specific scope of work.

4.0 Roles & Responsibilities

Roles	Responsibilities
Project anager:	• Designs work plans, etc. • Oversees field implementation of work plan. • iaison to client.
ield Technician ield Sampling Team:	• Performs field activities. • aintains a field logbook. • Prepares samples, chain-of-custody, etc. for submittal to laboratory. • Coordinates with site contact and project manager. • anages subcontractors and utility locate services. • Prepares reports as needed.

5.0 Attachments

This SOP will be used in conjunction with the attachments described below. These attachments must be used by all ee yan staff.

Title	Description
1) SOP - quipment Decontamination (3 2.1)	• Outlines the process used for decontaminating filed equipment after use.
2) SOP - Sample Packaging and Shipping (3 .1)	• Outlines how to properly place sample containers in a temperature controlled cooler.
3) SOP - Chain-of-Custody Use (3 .2)	• Outlines how to properly complete a chain-of- custody form for collected samples.

6.0 Equipment

6.1 Sample collection governed by this SOP may be collected using shovels, scoops, trowels, hand augers, backhoes, or similar utensils and equipment.

6.2 Decontamination supplies, materials as necessary.

6.3 Sampling containers, coolers, etc. as necessary.

6.4 Proper health and safety gear.

7.0 Quality Control

7.1 The ield Technician or field sampling team is responsible for collecting representative soil samples that can be analyzed as received from the field. The Project anager must brief the sampling team or ield Technician regarding the types of soils to be collected, the components of interest in the samples, and the collection of samples that represent that matrix of interest. The sampling team must be trained to remove all items that are not integral components of the matrix of interest.

7.2 After sampling each location, all equipment must be thoroughly cleaned to prevent cross-contamination of samples.

8.0 Health & Safety

8.1 hen working with potentially hazardous materials, employees should follow the ee yan *Corporate Health and Safety Manual*. ore specifically, depending on the site-specific contaminates, various protective programs must be implemented prior to sampling in a site-specific health and safety plan. The site health and safety plan should be reviewed with specific emphasis placed on the protection planned for the sampling task. Standard safe operating practices should be followed during the sample packaging and shipping process such as minimizing contact with potential contaminates in both the vapor phase and solid matrix through the use of a respirator, protective disposal clothing, or other means necessary to reduce the risk of exposure.

1.0 Purpose

This Standard Operating Procedure (SOP) describes the guidelines for collecting subsurface soil samples.

2.0 Scope

2.1 The sampling team or ield Technician is responsible for collecting representative soil samples that can be analyzed as received from the field. The Project Manager must brief the ield Sampling Team or ield Technician regarding the types of soils to be collected, the components of interest in the samples, and the collection of samples that represent that matrix of interest. Specifically, the sampling team or ield Technician must be trained to remove all items that are not integral components of the matrix of interest.

2.2.1 The project work plan will specify the appropriate sampling locations and techniques. Sampling locations representative of the investigation area must be chosen; in some instances, a statistical procedure may be employed to identify the sampling locations and number of samples.

2.2.2 All soil-sampling points must be marked with a stake or other marking, which is labeled with an identification number. The sampling sites should be described in the field logbook (*L&R SOP 326.30*) and a scale site map provided. Prior to sampling, surface vegetation, rocks and other debris are cleared from the sampling point to allow the collection of representative soil samples. After sampling each location, all equipment must be thoroughly cleaned to prevent cross-contamination of samples.

3.0 Requirements

3.1 Soil samples must be placed in containers appropriate for the analytical parameter or parameter group of interest. Pre-cleaned containers are provided by the laboratory engaged for the chemical analyses. Samples for organic and inorganic chemical analyses are placed in amber-glass bottles with Teflon -lined lids. Samples for volatile organics (OCs) are placed in septum-sealed vials or containers appropriate for the particular analytical method. The sample bottles must be labeled in accordance with *L&R SOP 356.40*. The sample bottles are placed in an insulated, temperature controlled (4ºC) cooler or chest immediately after sampling (*L&R SOP 346.10*) and delivered to the

testing laboratory as soon as possible. Standard chain of custody protocols are observed for soil samples (*L&R SOP 346.20*).

4.0 Roles & Responsibilities

Roles	Responsibilities
ro ect Manager	• esigns wor plans, etc. • versees field implementation of wor plan. • iaison to client.
ield Sampling Team ield Technician	• erforms field activities. • Maintains a field logboo . • repares samples, chain of custody, etc. for submittal to laboratory. • Coordinates with site contact and pro ect manager. • Manages subcontractors and utility locate services, etc. • repares reports as needed.

5.0 Attachments

This S will be used in con unction with the following attachments. These attachments must be used by all ee yan staff.

SOP Title	Description
) ___.___ econtamination of on edicated ield quipment	• econtamination procedures.
) ___.___ reparation of ield uality Control Samples for Soil	• reparation of C samples.
) ___.___ ield ocumentation	• se of field log boo .
4) _4 .___ Sample Chain of Custody ocumentation	• nalytical chain of custody preparation.
) _4 .___ Sample ac aging and Shipping	• Sample preparation for submittal to laboratory.
) ___.4_ Sample abeling	• Sample container labeling procedures.

6.0 Equipment

6.1 The equipment needed is a function of the scope of wor and may include eoprobe® technology, hollow stem auger, hand auger, shovel, hand shovel, or other applicable equipment. See specific S s describing the use of the above mentioned equipment.

7.0 Quality Control

7.1 Field Quality Control Objectives

uality control (C) sampling should be performed in the field at a specified frequency in order to address the following

( ) the integrity of the sample container and the effectiveness of sampling equipment cleaning;
( ) the actual sample collection process;
( ) the influence of site environmental conditions;
(4) cross contamination of samples; and
( ) indeterminate artifacts introduced during the transport or samples and from sample and shipping containers, sample preservatives, cleaning agents, and sampling equipment.

These samples are not part of the laboratory quality assurance ( ) C program and are treated by the laboratory simply as environmental samples. C samples for subsurface soil consist of a duplicate and matrix spi e samples.

. . ield duplicate samples of the soil matrix for all parameter groups should be ta en in the field at a frequency of at least (one ( ) duplicate sample per environmental samples). The duplicate analyses provide a measure of any inadvertent contamination during the sampling process and also provide an indication of analytical variability**. Duplicate samples are collected at the time the initial soil sample is collected and is identified with a fictitious designation so the duplicate analytical results are not subject to laboratory bias**. The field duplicate shall be collected in the most contaminated area on the site.

. . ield matrix spi e samples of the soil matrix for all parameter groups should be ta en in the field at a frequency of at least (one ( ) matrix spi e sample per environmental

samples). The matrix spi e analyses are performed by the analytical laboratory with nown quantities of specific compounds and sub ected to the entire analytical procedure in order to indicate the appropriateness of the method for the matrix by measuring recovery**. Matrix spike samples are collected at the time the initial soil sample is collected and is identified as 'matrix spike' on the chain of custody.** The field matrix spi e shall be collected in the least contaminated area on the site.

7.2 Equipment Cross-Contamination

The following measures are ta en by sampling personnel to prevent or minimi e contamination of equipment and cross contamination among sampling locations.

. . ield personnel must wear a clean pair of latex gloves during sampling. t a minimum, gloves are changed between sampling locations and gloves are changed more often as needed if their potential contamination is suspected.

. . Sampling should employ dedicated or disposal equipment whenever feasible to minimi e the manual decontamination required for re usable equipment. isposable equipment may include augers, shovels, etc. isposable sampling equipment suspected of being contaminated is discarded and replaced with clean, disposable equipment. on dedicated (reusable) sampling equipment that may contact soil must be constructed of inert materials (C, polyethylene, stainless steel, nylon, Teflon®, etc.) that do not pose a C concern with the soil analyses.

. . edicated and or disposable equipment is visually chec ed for pre use cleanliness prior to and following its use.

. .4 edicated sampling equipment and other re useable materials are stored in plastic bags or in a manner which minimi es potential contamination resulting from contact with soil, unclean surfaces, and possible airborne pollutants.

. . Sampling efforts should avoid wind blown particles from contaminating the samples or sampling equipment. f fuel burning engines are present on location (e.g., generators or automobiles), field personnel must relocate downwind and or at a sufficient distance so as to avoid potential airborne contamination.

. . nless dedicated and or disposable equipment is used, sampling is performed sequentially from areas nown to exhibit the least to most contamination to minimi e the potential for cross contamination.

. . ater used for cleaning field equipment must be bottled, distilled or de ioni ed water. ater from chemical supply companies or retail merchants is acceptable. The analytical laboratory engaged for the chemical analyses can provide reagent grade water meeting or exceeding STM Type quality criteria for use in cleaning equipment in the field.

7.3 Sample Handling and Mixing

. . Sample handling should be ept to a minimum. ee yan personnel must use extreme care to avoid sample contamination. f samples are placed in an ice chest, personnel should ensure that sample containers do not become submerged or tip over as this may result in cross contamination. Small sample containers (e.g., Cs, etc.) should be placed in air tight plastic bags to prevent cross contamination. nce a sample has been collected, it may have to be split into separate containers for different analyses.

. . soil sample may be split but first, it must be mixed as thoroughly as possible to ensure a representative sample of the parent material. This is accomplished using the quartering method. The soil is placed in a sample pan and divided into quarters. ach quarter is mixed separately, and then all quarters are mixed together. This is repeated several times until the sample is thoroughly mixed. f a round bowl is used for mixing, mixing is achieved by stirring the material in a circular fashion and occasionally turning the material over. **Soil samples collected for VOCs shall not be mixed**. The appropriate sample container should be filled completely with no headspace remaining. Moisture content inversely affects the accuracy of mixing and splitting a soil sample.

. . The sampling method for volatiles in soil or sediment depends on the chemical analyses procedure and the nature of the soil. ortions of soil may be placed in empty containers. n other instances, sealed cores may be shipped to the laboratory for sub sampling.

. .4 The primary considerations for acquiring soil samples for volatiles analysis, either in the field or in the laboratory, include the following

. .4. Storing the samples at 4 C.

. .4. Minimi ing sample handling.

. .4. Minimi ing sample air contact.

. . Using air-tight seals on all containers used in shipment or laboratory work.

. . Placing samples or sub-samples in air-tight containers immediately after collection.

8.0 Health & Safety

8.1 hen working with potentially hazardous materials, employees should follow Lee & yan's *Corporate Health & Safety Manual* procedures. More specifically, depending on the site-specific contaminants, various protective programs must be implemented prior to sampling the first well. The site health and safety plan should be reviewed with specific emphasis placed on the protection program planned for the well sampling tasks. Standard safe operating practices should be followed such as minimizing contact with potential contaminants in both the vapor phase and liquid matrix through the use of respirators and disposable clothing.

.1.1 Working around volatile organic contaminants

8.1.1.1 Avoid breathing constituents venting from the well.

8.1.1.2 Pre-survey the well headspace with an FID/PID prior to sampling as needed, if applicable.

8.1.1.3 If monitoring results indicate organic constituents, sampling activities may be conducted in Level C protection. At a minimum, skin protection will be afforded by disposable protective clothing.

8.2 Physical Hazards

8.2.1 Lifting injuries associated with moving equipment.

8.2.2 Use of pocket knives.

8.2.3 Heat/cold stress as a result of exposure to extreme temperatures and protective clothing.

8.2.4 Slip, trip, fall conditions.

8.2.5 Restricted mobility due to the wearing of protective clothing.

APPENDIX C

ESC SOPs

Sampling Analysis Plan
Remediation of SWMU 39 TCE Plume
NSA Mid-South
Millington, TN 38054

ENVIRONMENTAL SCIENCE CORPORATION
12065 Lebanon Road, Mount Juliet, Tennessee 37122
Phone: (615) 758-5858; Facsimile: (615) 758-5859

SOP Revision Summary

SOP:		
Author - Michael Jacobs	**Number -** 330363	**Department -** Volatiles
Title - VOLATILE ORGANIC COMPOUNDS BY GC/MS (EPA 8260B, 624 AND SM6200B 20TH)		
Revision - R16	**Rev. Date -** 01/30/2009	

This Standard Operating Procedure has been amended to include changes required during normal business operations. These changes as defined by SOP 010103 (Document Control and Distribution) are routine modifications that will be incorporated into the SOP upon the next scheduled review.

Rev.	Date	Section	Brief Description
1	07/30/2009	7.4.1, 7.4.2, 8.2.3.1, 8.2.3.2, 8.2.3.3	Addition of Oxygenates calibration and QC requirements
		8.2.6.4 & 9.11	Addition of South Carolina Requirements
2	09/03/2009	9.11	Addition of equal weighting or 1/x regression
3	09/18/2009	11.11	Addition of client note
4	10/02/2009	Varous	Addition of 8260C requirements
5	10/30/2009	8.3.4	Added to list of poor performers

TITLE: VOLATILE ORGANIC COMPOUNDS BY GC/MS (EPA 8260B, 624 AND SM6200B 20TH)

SOP NUMBER: 330363

PREPARED BY: Michael Jacobs

REVIEWED BY: Ben Wilson/Dixie Marlin

This document bears a watermark in the bottom right hand corner. The watermark is an insignia of the document's approval. The signed original is on file in the Reg. Affairs Office.

_____
Department Manager

_____
QA Department

1.0 SCOPE AND APPLICATION

1.1 This standard operating procedure is used to determine volatile organic compounds in a variety of matrices. This SOP is designed for EPA methods 8260B, 624, 6200B, KSGRO, or similar volatile GC/MS analyses. This procedure is applicable to nearly all kinds of samples, regardless of water content, including ground water, aqueous sludge, caustic liquors, acid liquors, waste solvents, oily wastes, mousses, tars, fibrous wastes, polymeric emulsions, filter cakes, spent carbons, spent catalysts, soils and sediments. The compounds that can be determined using this SOP are listed in Attachment III, which contains a list of the typical primary and secondary ions used in determining these compounds.

1.2 Reporting Limits (RLs) are listed in the following Table 1. Compounds routinely analyzed by this method and their typical reporting limits are included in the following table (subject to change).

Table 1 - 8260/624/6200B Reporting Limits and Common Calibration List

	Water		Low Soil		High Soil	
Compound	**RL**	**Units**	**RL***	**Units**	**RL**	**Units**
Acetone	0.050	mg/L	0.050	mg/Kg	2.5	mg/Kg
Acrolein	0.050	mg/L	0.050	mg/Kg	2.5	mg/Kg
Acrylonitrile	0.010	mg/L	0.010	mg/Kg	0.5	mg/Kg
Benzene	0.001	mg/L	0.001	mg/Kg	0.05	mg/Kg
Bromobenzene	0.001	mg/L	0.001	mg/Kg	0.05	mg/Kg
Bromodichloromethane	0.001	mg/L	0.001	mg/Kg	0.05	mg/Kg
Bromoform	0.001	mg/L	0.001	mg/Kg	0.05	mg/Kg

Approved ESC Copy
(printed from Adobe)
Approved ESC Copy
(printed from Adobe)

nless bar coded, any printed copies of this document are considered uncontrolled and for reference only. t is the responsibility of the staff members to ensure that they are using the correct revision of this document by chec ing the document revision level with that held on the SC web site.

TITLE: VOLATILE ORGANIC COMPOUNDS BY GC/MS (EPA 8260B, 624 AND SM6200B 20TH)

Compound	RL	Units	RL*	Units	RL	Units
Bromomethane	0.005	mg/L	0.005	mg/Kg	0.25	mg/Kg
n-Butylbenzene	0.001	mg/L	0.001	mg/Kg	0.05	mg/Kg
sec-Butylbenzene	0.001	mg/L	0.001	mg/Kg	0.05	mg/Kg
tert-Butylbenzene	0.001	mg/L	0.001	mg/Kg	0.05	mg/Kg
Carbon tetrachloride	0.001	mg/L	0.001	mg/Kg	0.05	mg/Kg
Chlorobenzene	0.001	mg/L	0.001	mg/Kg	0.05	mg/Kg
Chlorodibromomethane	0.001	mg/L	0.001	mg/Kg	0.05	mg/Kg
Chloroethane	0.005	mg/L	0.005	mg/Kg	0.25	mg/Kg
2-Chloroethyl vinyl ether	0.050	mg/L	0.050	mg/Kg	2.5	mg/Kg
Chloroform	0.005	mg/L	0.005	mg/Kg	0.25	mg/Kg
Chloromethane	0.0025	mg/L	0.001	mg/Kg	0.05	mg/Kg
2-Chlorotoluene	0.001	mg/L	0.001	mg/Kg	0.05	mg/Kg
4-Chlorotoluene	0.001	mg/L	0.001	mg/Kg	0.05	mg/Kg
1,2-Dibromo-3-Chloropropane	0.005	mg/L	0.005	mg/Kg	0.25	mg/Kg
1,2-Dibromoethane	0.001	mg/L	0.001	mg/Kg	0.05	mg/Kg
Dibromomethane	0.001	mg/L	0.001	mg/Kg	0.05	mg/Kg
1,2-Dichlorobenzene	0.001	mg/L	0.001	mg/Kg	0.05	mg/Kg
1,3-Dichlorobenzene	0.001	mg/L	0.001	mg/Kg	0.05	mg/Kg
1,4-Dichlorobenzene	0.001	mg/L	0.001	mg/Kg	0.05	mg/Kg
Dichlorodifluoromethane	0.005	mg/L	0.005	mg/Kg	0.25	mg/Kg
1,1-Dichloroethane	0.001	mg/L	0.001	mg/Kg	0.05	mg/Kg
1,2-Dichloroethane	0.001	mg/L	0.001	mg/Kg	0.05	mg/Kg
1,1-Dichloroethene	0.001	mg/L	0.001	mg/Kg	0.05	mg/Kg
cis-1,2-Dichloroethene	0.001	mg/L	0.001	mg/Kg	0.05	mg/Kg
trans-1,2-Dichloroethene	0.001	mg/L	0.001	mg/Kg	0.05	mg/Kg
1,2-Dichloropropane	0.001	mg/L	0.001	mg/Kg	0.05	mg/Kg
1,1-Dichloropropene	0.001	mg/L	0.001	mg/Kg	0.05	mg/Kg
1,3-Dichloropropane	0.001	mg/L	0.001	mg/Kg	0.05	mg/Kg
cis-1,3-Dichloropropene	0.001	mg/L	0.001	mg/Kg	0.05	mg/Kg
trans-1,3-Dichloropropene	0.001	mg/L	0.001	mg/Kg	0.05	mg/Kg
2,2-Dichloropropane	0.001	mg/L	0.001	mg/Kg	0.05	mg/Kg
Di-isopropyl ether	0.001	mg/L	0.001	mg/Kg	0.05	mg/Kg
Ethylbenzene	0.001	mg/L	0.001	mg/Kg	0.05	mg/Kg
Hexachlorobutadiene	0.001	mg/L	0.001	mg/Kg	0.05	mg/Kg
Hexane	0.010	mg/L	0.010	mg/Kg	0.50	mg/Kg
Isopropylbenzene	0.001	mg/L	0.001	mg/Kg	0.05	mg/Kg
p-Isopropyltoluene	0.001	mg/L	0.001	mg/Kg	0.05	mg/Kg
2,2,4-Trimethyl Pentane	0.001	mg/L	0.001	mg/Kg	0.05	mg/Kg

Approved ESC Copy
(printed from Adobe)
Approved ESC Copy
(printed from Adobe)

nless bar coded, any printed copies of this document are considered uncontrolled and for reference only. t is the responsibility of the staff members to ensure that they are using the correct revision of this document by chec ing the document revision level with that held on the SC web site.

TITLE: VOLATILE ORGANIC COMPOUNDS BY GC/MS (EPA 8260B, 624 AND SM6200B 20TH)

Compound	RL	Units	RL*	Units	RL	Units
2-Butanone (MEK)	0.050	mg/L	0.050	mg/Kg	2.5	mg/Kg
Methylene Chloride	0.005	mg/L	0.005	mg/Kg	0.25	mg/Kg
4-Methyl-2-pentanone (MIBK)	0.010	mg/L	0.010	mg/Kg	0.50	mg/Kg
Methyl tert-butyl ether	0.001	mg/L	0.001	mg/Kg	0.05	mg/Kg
Naphthalene	0.005	mg/L	0.005	mg/Kg	0.25	mg/Kg
n-Propylbenzene	0.001	mg/L	0.001	mg/Kg	0.05	mg/Kg
Styrene	0.001	mg/L	0.001	mg/Kg	0.05	mg/Kg
1,1,1,2-Tetrachloroethane	0.001	mg/L	0.001	mg/Kg	0.05	mg/Kg
1,1,2,2-Tetrachloroethane	0.001	mg/L	0.001	mg/Kg	0.05	mg/Kg
Tetrachloroethene	0.001	mg/L	0.001	mg/Kg	0.05	mg/Kg
Toluene	0.005	mg/L	0.005	mg/Kg	0.25	mg/Kg
1,2,3-Trichlorobenzene	0.001	mg/L	0.001	mg/Kg	0.05	mg/Kg
1,2,4-Trichlorobenzene	0.001	mg/L	0.001	mg/Kg	0.05	mg/Kg
1,1,1-Trichloroethane	0.001	mg/L	0.001	mg/Kg	0.05	mg/Kg
1,1,2-Trichloroethane	0.001	mg/L	0.001	mg/Kg	0.05	mg/Kg
Trichloroethene	0.001	mg/L	0.001	mg/Kg	0.05	mg/Kg
Trichlorofluoromethane	0.005	mg/L	0.005	mg/Kg	0.25	mg/Kg
1,2,3-Trichloropropane	0.001	mg/L	0.001	mg/Kg	0.05	mg/Kg
1,2,4-Trimethylbenzene	0.001	mg/L	0.001	mg/Kg	0.05	mg/Kg
1,3,5-Trimethylbenzene	0.001	mg/L	0.001	mg/Kg	0.05	mg/Kg
Vinyl chloride	0.001	mg/L	0.001	mg/Kg	0.05	mg/Kg
Xylenes, Total	0.003	mg/L	0.003	mg/Kg	0.15	mg/Kg
Additional Compounds						
Acetonitrile	0.050	mg/L	0.050	mg/Kg	2.5	mg/Kg
Allyl Chloride	0.005	mg/L	0.005	mg/Kg	0.25	mg/Kg
Chloroprene	0.050	mg/L	0.050	mg/Kg	2.5	mg/Kg
Trans-1,4-Dichloro-2-butene	0.0025	mg/L	0.0025	mg/Kg	0.125	mg/Kg
Isobutanol	0.100	mg/L	0.100	mg/Kg	5.0	mg/Kg
1,4-Dioxane+	0.100	mg/L	0.100	mg/Kg	5.0	mg/Kg
Methacrylonitrile	0.050	mg/L	0.050	mg/Kg	2.5	mg/Kg
Methyl Methacrylate	0.005	mg/L	0.005	mg/Kg	0.25	mg/Kg
Ethyl methacrylate	0.005	mg/L	0.005	mg/Kg	0.25	mg/Kg
Propionitrile	0.050	mg/L	0.050	mg/Kg	2.5	mg/Kg
Pentachloroethane	0.005	mg/L	0.005	mg/Kg	0.25	mg/Kg
Carbon Disulfide	0.001	mg/L	0.001	mg/Kg	0.050	mg/Kg
Cyclohexanone	0.010	mg/L	0.010	mg/Kg	0.50	mg/Kg
2-Hexanone	0.010	mg/L	0.010	mg/Kg	0.50	mg/Kg
Iodomethane	0.010	mg/L	0.010	mg/Kg	0.50	mg/Kg

Approved ESC Copy
(printed from Adobe)
Approved ESC Copy
(printed from Adobe)

nless bar coded, any printed copies of this document are considered uncontrolled and for reference only. t is the responsibility of the staff members to ensure that they are using the correct revision of this document by chec ing the document revision level with that held on the SC web site.

Compound	RL	Units	RL*	Units	RL	Units
Isobutanol	0.001	mg/L	0.001	mg/Kg	0.050	mg/Kg
Propionitrile	0.001	mg/L	0.001	mg/Kg	0.050	mg/Kg
Vinyl Acetate	0.050	mg/L	0.050	mg/Kg	2.5	mg/Kg
Tetrahydrofuran	0.005	mg/L	0.005	mg/Kg	0.25	mg/Kg
Bromoethane	0.001	mg/L	0.001	mg/Kg	0.050	mg/Kg
2-Butanol	0.050	mg/L	0.050	mg/Kg	2.5	mg/Kg
Ethanol	0.050	mg/L	0.050	mg/Kg	2.5	mg/Kg
Tert-Butyl Alcohol	0.050	mg/L	0.050	mg/Kg	2.5	mg/Kg
Di-isopropyl ether	0.001	mg/L	0.001	mg/Kg	0.050	mg/Kg
Ethyl tert-butyl ether	0.001	mg/L	0.001	mg/Kg	0.050	mg/Kg
Methyl-tert-butyl ether	0.001	mg/L	0.001	mg/Kg	0.050	mg/Kg
Tert-Butyl alcohol	0.050	mg/L	0.050	mg/Kg	2.5	mg/Kg
Tert-Amyl Methyl Ether	0.001	mg/L	0.001	mg/Kg	0.050	mg/Kg
Tert-Butyl Formate	0.020	mg/L	0.020	mg/Kg	1.0	mg/Kg
Tert Butyl Ethyl Alcohol	0.100	mg/L	0.100	mg/Kg	5.0	mg/Kg
Tert Amyl Alcohol	0.005	mg/L	0.005	mg/Kg	0.25	mg/Kg
Dichlorofluoromethane	0.005	mg/L	0.005	mg/Kg	0.25	mg/Kg

RLs are based on a 5mL purge volume
Low Soil - Using a 5g soil sample to 5mL water – See Method 5035 (SOP# 330751) Section 8.2.4.1
High Soil – Using 100uL extract from 5g. soil sample to 5mL methanol – See Method 5035 (SOP# 330751) Section 8.3.1.2

- + 1-4,Dioxane has a RL of .004 when run using the SIM mode.

2.0 METHOD SUMMARY AND DEFINITIONS

2.1 Volatile organic compounds (VOCs) are determined from a 5mL sample withdrawn from a sealed 40mL vial. For water samples analyzed for low levels of analytes using Method 5030 (SOP 330752), the entire vial is placed into the instrument autosampler. The autosampler purges 5mL of sample and adds 1µL of surrogate standards and internal standards. An inert gas is bubbled through a sparger needle inserted into the sample. The purged volatile components then travel via a transfer line to a sorbent trap. When purging is complete, the trap is rapidly heated. The trap is backflushed with a helium carrier gas, to transport the desorbed sample components into a gas chromatographic (GC) column. The GC column separates and carries the components to a mass spectrometer (MS) or a specific detector, depending on the determinative method selected.

2.2 For other samples, Method 5035 (SOP 330751), volatile organic compounds are determined from a 5g sample combined with 5mL reagent water.

Approved ESC Copy
(printed from Adobe)
Approved ESC Copy
(printed from Adobe)

nless bar coded, any printed copies of this document are considered uncontrolled and for reference only. t is the responsibility of the staff members to ensure that they are using the correct revision of this document by chec ing the document revision level with that held on the SC web site.

2.3 Initial/Continuing Calibration Verification (ICV/CCV) – Analytical standard run at the beginning of every 12 hours shift to verify the stability of the established initial calibration of the analytical system.

2.4 Continuing Demonstration of Capability (CDOC) – At least, annual verification of analyst continued ability to perform method acceptably.

2.5 Duplicate – A second aliquot of a field sample analyzed using identical preparation and analytical procedures. Analysis of a sample duplicate monitors precision associated with laboratory procedures.

2.6 Initial Demonstration of Capability (IDOC) - A demonstration of capability (DOC) must be made prior to using any analytical method and any time there is a change in instrument type, personnel or testing method. Such performance must be documented and the four preparation batches following the change in personnel must not result in the failure of any batch acceptance criteria, e.g., method blank and laboratory control sample, or the demonstration of capability must be repeated. See also Continuing Demonstration of Capability (CDOC).

2.7 Laboratory Control Sample (LCS) / Laboratory Control Sample Duplicate (LCSD) – Duplicate aliquots of a control sample of known in composition. This sample is prepared from a source that is different from the stock used to prepare the initial and continuing calibration standards. LCS/LCSD are analyzed exactly like a sample and the purpose is to determine whether the methodology is in control and whether the laboratory is capable of making accurate and precise measurements. Method precision can be determined using the results of the LCS/LCSD analysis.

2.8 Matrix Spike (MS) / Matrix Spike Duplicate (MSD) - Two aliquots of a field sample (water or soil) spiked with known quantities of specific compounds and subjected to the entire analytical procedure in order to indicate the appropriateness of the method for the matrix by measuring recovery. Method precision can be determined using the results of the MS/MSD analysis, but are subject to matrix variability issues not present in the LCS/LCSD pair.

2.9 Method Blank - An analytical control consisting of all reagents used in the analytical procedure. The method blank is used to define the level of laboratory background and reagent contamination.

2.10 Method Detection Limit - The minimum concentration of a substance that can be analyzed with 99% confidence that the analyte concentration is greater than zero.

2.11 Reporting Limit (RL) – Also see Practical Quantitation Limit (PQL). Routinely the reporting limit is the lowest standard of the calibration curve. Technically, the reporting limit is the lowest level that can be reliably achieved within the established limits of precision and accuracy during routine laboratory operating conditions.

Approved ESC Copy
(printed from Adobe)
Approved ESC Copy
(printed from Adobe)

nless bar coded, any printed copies of this document are considered uncontrolled and for reference only. t is the responsibility of the staff members to ensure that they are using the correct revision of this document by chec ing the document revision level with that held on the SC web site.

2.12 Practical Quantitation Limit (PQL) – The default reporting limit when other limits are not specified by the client or project. The PQL is usually a factor of 3-10 times the detection limit.

2.13 Second Source Calibration Verification (SSCV) – A mid-point or low standard made from a secondary standard that is not used to construct the calibration curve. The SSCV is used to represent the calibration accuracy of the instrument and must perform within method stated criteria.

2.14 Surrogate - A compound which is similar to the target analytes in chemical composition and behavior and not expected to occur naturally in field samples that is spiked by preparation/analytical personnel to assess sample preparation and analytical efficiency in each individual field sample.

3.0 HEALTH AND SAFETY

3.1 The toxicity or carcinogenicity of each reagent used in this method has not been fully established. Each chemical should be regarded as a potential health hazard and exposure should be as low as reasonably achievable. Specific cautions are included for known extremely hazardous materials.

3.2 For specific information regarding the toxicity of the chemicals used in this method, a reference file of Material Safety Data Sheets (MSDS) is made available to all staff.

3.3 Safety glasses, gloves, and a laboratory coat must be worn to protect against physical contact with samples and laboratory reagents that contain potentially hazardous chemicals.

3.4 Waste generated from the procedure need to be disposed according to ESC policy and local, state, and federal law.

3.5 Glycol ethers are suspected carcinogens. All solvent handling should be performed in a hood while using proper protective equipment to minimize exposure to liquid and vapor. Minimum personal protection includes the use of laboratory safety glasses, a lab coat or apron, and protective gloves.

4.0 SAMPLE PRESERVATION, CONTAINERS, HANDLING, AND STORAGE

4.1 Volatile analysis for water and sodium bisulfate preserved soil samples must be completed within 14 days from the time of sample collection. Water samples that are not chemically preserved must be analyzed within 7 days. It is also an ESC requirement that water samples with 2-chloroethylvinyl ether (2-CEVE), as a compound of interest, be collected unpreserved and analyzed within 7 days of collection. It has been shown that the acid preservative reacts with the 2-CEVE, which could result in false negative reporting of 2-CEVE in samples. Unpreserved soil samples must be analyzed within 48

Approved ESC Copy
(printed from Adobe)
Approved ESC Copy
(printed from Adobe)

nless bar coded, any printed copies of this document are considered uncontrolled and for reference only. t is the responsibility of the staff members to ensure that they are using the correct revision of this document by chec ing the document revision level with that held on the SC web site.

hrs from the time of collection or otherwise frozen at -12+/-3°C. High-level soil samples collected in Encore™ or equivalent type sampling devices must be placed in vials of methanol according to Method 5035 (SOP# 330751).

STATE NOTE: The State of South Carolina and the OHIO VAP requires that all soil samples must be collected and analyzed using Method 5035. Samples must be preserved within 48 hours from the time of collection, if collected in Encore™ type sampling devices. The holding time for soil samples preserved with methanol or sodium bisulfate is 14 days from the time of collection.

4.2 Aqueous samples must be collected in at least duplicate in 40mL vials with 0.008% $Na_2S_20_3$ per liter if residual chlorine is present. Sample kits can be configured to request additional vials per client request. The pH must be adjusted to <2 with HCl. Soil samples must be collected by one of the following: 1) A 4oz. soil jar filled with soil with zero headspace, 2) Two 5g samples preserved in the field with 5mL $NaHS0_4$ to a pH<2 and one 5g sample preserved in the field with methanol (for high level analysis) or 3) A 5g or 25g sample collected in an Encore or equivalent type sampling device and frozen in the laboratory within 48 hours from the time of collection.

For all soil samples, a 40z soil jar should also be collected to determine percent solids. All samples and extracts must be shipped and stored at 4°C.

STATE NOTE: Soil and Water samples received from the states of Missouri or Kansas may be preserved with tri-sodium phosphate and will have a resulting pH of 14.

STATE NOTE: For Ohio VAP samples, Encore samplers must be collected in the field and shipped to the laboratory to be frozen within 48 hours of collection. These samples will remain frozen until analysis and do not require additional chemical preservation. The holding time for these samples remains at 14 days from the time of collection. The holding time begins at collection and ends at 14 days.

5.0 INTERFERENCES

5.1 Major sources of contamination are volatile materials in the laboratory and impurities in the inert purging gas and in the sorbent trap. The use of non-polytetrafluoroethylene (PTFE) thread sealants, plastic tubing, or flow controllers with rubber components must be avoided since such materials out-gas organic compounds which will be concentrated in the trap during the purge operation.

5.2 Analyses of reagent blanks provide information about the presence of contaminants. When potential interfering peaks are noted in blanks, the analyst should change the

Approved ESC Copy
(printed from Adobe)
Approved ESC Copy
(printed from Adobe)

nless bar coded, any printed copies of this document are considered uncontrolled and for reference only. t is the responsibility of the staff members to ensure that they are using the correct revision of this document by chec ing the document revision level with that held on the SC web site.

purge gas source and regenerate the molecular sieve purge gas filter. Subtracting blank values from sample results is not permitted.

5.3 Interfering contamination may occur when a sample containing low concentrations of volatile organic compounds is analyzed immediately after a sample containing high concentrations of volatile organic compounds. After analysis of a sample containing high concentrations, one or more instrument blanks must be analyzed to check for cross contamination.

5.3.1 This interference may be prevented by rinsing the purging apparatus and sample syringes with portions of organic-free reagent water between samples.

5.3.2 For samples containing large amounts of water soluble materials, suspended solids, high boiling compounds or high concentrations of compounds being determined, it may be necessary to wash the purging device with a soap solution, rinse it with organic-free reagent water, and then dry the purging device in an oven at 105°C.

5.3.3 In extreme situations, the whole purge and trap device may require dismantling and cleaning.

5.3.4 Screening of the samples prior to purge and trap GC/MS analysis is highly recommended to prevent contamination of the system. This is especially true for soil and waste samples. Screening may be accomplished with an automated headspace technique. by SW-846 Method 3820, Hexadecane Extraction and Screening of Purgeable Organics), or screening of 5mL of sample using an HNU or equivalent portable PID.

5.4 Special precautions must be taken to avoid contamination when analyzing for methylene chloride. The analytical and sample storage area must be isolated from all atmospheric sources of methylene chloride. Otherwise, random background levels will result. Since methylene chloride will permeate through PTFE tubing, all gas chromatography carrier gas lines and purge gas plumbing must be constructed from stainless steel or copper tubing. Laboratory clothing worn by the analyst must be clean since clothing previously exposed to methylene chloride fumes during liquid/liquid extraction procedures can contribute to sample contamination.

5.5 Samples can be contaminated by diffusion of volatile organics (particularly methylene chloride and fluorocarbons) through the septum seal into the sample during shipment and storage. A trip blank prepared from organic-free reagent water and carried through the sampling and handling protocol can serve as a check on such contamination. A storage blank must be analyzed weekly to check for cross contamination of samples while samples are stored in the volatiles laboratory walk-in cooler. The storage blank is prepared from organic-free water and is placed in the cooler for a period of one week. After a week, it is analyzed to verify that no contamination of client samples has taken

Approved ESC Copy
(printed from Adobe)
Approved ESC Copy
(printed from Adobe)

nless bar coded, any printed copies of this document are considered uncontrolled and for reference only. t is the responsibility of the staff members to ensure that they are using the correct revision of this document by chec ing the document revision level with that held on the SC web site.

place due to contamination in the storage unit. Analysis of a storage blank must be performed for both the volatiles laboratory walk-in coolers.

5.6 This procedure can be used to quantitate most volatile organic compounds that have boiling points below 200° C and that are insoluble or slightly soluble in water. Volatile water-soluble compounds can be included in this analytical technique. However, for the more soluble compounds, quantitation limits are approximately 50 times higher due to poor purging efficiency. Such compounds include low-molecular-weight halogenated hydrocarbons, aromatics, ketones, nitriles, acetates, acrylates, ethers, and sulfides.

5.7 Soil samples that contain carbonate minerals (either from natural sources or applied as an amendment) may effervesce upon contact with the acidic preservative solution in the low concentration sample vial. If a large amount of effervescent gas is generated, the sample may lose a significant amount of volatile analytes. If a sample effervesces, an unpreserved sample will be collected to eliminate volatiles loss whenever possible. The holding time for unpreserved VOC samples is seven days, rather than 14 days.

5.8 An analyst may re-analyze any sample if instrumentation or human error is suspected. This includes all QC samples, which can only be re-analyzed twice. If failure continues, instrument maintenance must be performed and/or the instrument must be re-calibrated.

5.9 Glassware must be scrupulously cleaned. All glassware must be cleaned per EPA protocol, as stated in SOP # 030701, *Glassware Cleaning*.

6.0 EQUIPMENT AND SUPPLIES

The operation, cleaning, and scheduled maintenance procedures, as prescribed by the equipment manufacturer, are followed as provided in the Operator's Manuals. Documentation of maintenance or system modifications are recorded in a maintenance logbook which accompanies each analytical system.

6.1 Instrumentation: All instrumentation meets or exceeds EPA method requirements.

- Use (method #'s): 8260, 624
- Model #: HP 5890, or equivalent
- Column (type, brand, size): J & W Scientific DB VRX 75 m x 0.450 mm, 2.55 micron, or equivalent.
- Detector: MS 5972 or better.
- Software name and version: HP Chemstation G1701BA B.01.00, or equivalent
  Sample introduction system: Archon Autosampler, Encon P & T, or equivalent

6.2 Glassware must be scrupulously cleaned. All glassware must be cleaned per EPA protocol, as stated in SOP # 030701, *Glassware Cleaning*. Rinsing with methanol and laboratory reagent water cleans the volumetric flasks and graduated cylinders. The

Approved ESC Copy
(printed from Adobe)
Approved ESC Copy
(printed from Adobe)

Unless bar coded, any printed copies of this document are considered uncontrolled and for reference only. It is the responsibility of the staff members to ensure that they are using the correct revision of this document by checking the document revision level with that held on the ESC web site.

volumetric flasks are dried in a low temperature oven at less than 120°C and never cleaned with a brush or strong alkali solution.

6.3 The carrier gas used for volatiles analysis is Helium-5.0 grade.

6.4 Syringes used for preparing the calibration curve and preparing samples and sample dilutions are Hamilton brand (or equivalent). Syringe sizes used are 0.50µL, 10µL, 25µL, 50µL, 100µL, 250µL, 1mL, and 5mL.

6.5 Glass Sample (VOA) and Standard Vials:

6.5.1 40mL VOA vials with a Teflon™/silicone septa and polypropylene open-top cap.

6.5.2 8mL vials with Teflon™/silicone/Teflon™ septa and polypropylene open-top cap. (Used to store unused standards).

6.6 Miscellaneous:

6.6.1 Stainless Steel Spatula or wooden tongue depressor.

6.6.2 Disposable aluminum drying dishes - VWR #25433-008, or equivalent

6.6.3 Teflon™-coated stir bars, 8mm x 16mm

6.6.4 Laboratory Sand: Sand is prepared by rinsing clean, white sand with methanol and laboratory reagent water several times. The rinsed sand is baked in an oven at 175°C overnight to remove any volatiles and is then stored in the same oven. The heated laboratory sand is occasionally purged with carrier grade helium or nitrogen to remove trapped volatiles.

6.7 Oven: Fisher IsoTemp Forced-Air Oven with capabilities of 100°C, or equivalent

6.8 Top-loading Balance, capable of weighing to 0.01g, or equivalent.

7.0 REAGENTS AND STANDARDS

NOTE: All reagents and standards must be recorded in the appropriate preparation log and assigned a unique number. See SOP 030203, *Reagent Logs and Records*, and SOP 030230, *Standard Logger*. Additional information regarding reagent preparation can be found in the Standards Logger (Tree) digital archive system.

7.1 Laboratory water created by reverse osmosis/DI filtration evaluated to .055uS/cm to ensure purity. Laboratory water is used in all blanks to assure that it contains less than the minimum detection limit (MDL) of all compounds of interest. The blank must be assessed to ensure that the water does not show any detection of any VOC compounds.

Approved ESC Copy
(printed from Adobe)
Approved ESC Copy
(printed from Adobe)

Unless bar coded, any printed copies of this document are considered uncontrolled and for reference only. It is the responsibility of the staff members to ensure that they are using the correct revision of this document by checking the document revision level with that held on the ESC web site.

If volatile compounds are detected in the blank above the MDL all samples associated with this blank must be flagged.

7.2 Methanol, CH_3OH – purge-and-trap grade, demonstrated to be free of analytes. Store apart from other solvents.

7.3 Sodium Bisulfate, $Na_2S_2O_3$ - QEC Level 3 Certified, or equivalent

7.4 STOCK SOLUTIONS – Calibration and LCS

- Stock calibration solutions must be purchased as <u>certified</u> solutions.
- Certificates must be kept on file.
- All Stock standards must be stored below -10°C
- All non-gas stock standards must be replaced after six months, or sooner, if check standards indicate a problem.
- Both gas and liquid standards must be monitored closely by comparison to the initial calibration curve and by comparison to a second source initial calibration verification standard.
- Gas intermediate/secondary standards must be replaced weekly, or sooner, if comparison to check standards indicates a problem.
- Non-gas intermediate/secondary standards must be replaced after six months, or sooner, if comparison to check standards indicates a problem.

7.4.1 CALIBRATION - Primary source standards is used to prepare the initial 5-point calibration curve (additional levels may be used as needed), the initial calibration verification (ICV), and continuing calibration verification (CCV) standard. The ICV and CCV are analyzed to verify the initial calibration and are prepared using the primary source standards used to produce the calibration curve. See Section 8.2.3.1 or 8.2.3.2 for the instrument preparation of the calibration standards. When primary standards are consumed, new standards must meet the same QC criteria as the consumed standards. Stock standards must be stored below -10°C and have a six-month holding time once opened. The expiration date of the diluted standards must not exceed the expiration date of the stock standards from which they are prepared. Once diluted, the standard must be replaced weekly.

Approved ESC Copy
(printed from Adobe)
Approved ESC Copy
(printed from Adobe)

Unless bar coded, any printed copies of this document are considered uncontrolled and for reference only. It is the responsibility of the staff members to ensure that they are using the correct revision of this document by checking the document revision level with that held on the ESC web site.

ICV Mix

The ICV solution is prepared in methanol in a 50mL volumetric flask by adding:

Manufacturer	Product	Cat. #	Amount added (mL)	Final Conc. (ppm)
NSI	8260 Custom Mix 1	Q-4146	5	50
NSI	8260 Custom Mix 2	Q-4147	5	250
Absolute	n-Hexane	70962	2.5	50
NSI	1+2 Methylnaphthalenes	Q-4260A	2.5	50
NSI	Acrolein	Q-3835	2.5	250
NSI	8260 Gases Mix	CUS-5661	25	50

GRO ICV Mix

The GRO ICV solution is prepared in methanol in a 10mL volumetric flask by adding:

Manufacturer	Product	Cat. #	Amount added (mL)	Final Conc. (ppm)
Restek	TX TPH matrix spike mix	Cat 31484	1	1000

7.4.1.1 For soil/water autosamplers (5mL), a dilution of 10X is required for the ICV mix.

The solution is stored in 3mL aliquots in zero headspace vials. The storage temperature is below -10° C.

7.4.2 LABORATORY CONTROL STANDARDS - The standard list of target LCS compounds are those compounds listed in TABLE 11.7. Secondary source standards must be used to prepare the laboratory control standard (LCS) and the matrix spike and their duplicates. These standards are purchased from a different vendor or the primary vendor can supply different lot numbers, if a separate vendor is not available. The standard is at a concentration near the mid-level calibration standard. Stock standards must be stored at or below -10°C and have a six month holding time once opened, except the ICV gases which have 1 week holding time. Once diluted, the standard must be replaced weekly.

LCSs & Spikes

Prepare the LCS/LCSD in methanol in a 50mL volumetric flask as follows. A separate source or separate lot number is used for standard verification. The standard list of target LCS compounds are those compounds listed in TABLE 11.7.

Approved ESC Copy
(printed from Adobe)
Approved ESC Copy
(printed from Adobe)

Unless bar coded, any printed copies of this document are considered uncontrolled and for reference only. It is the responsibility of the staff members to ensure that they are using the correct revision of this document by checking the document revision level with that held on the ESC web site.

Manufacturer	Product	Cat. #	Amount added (mL)	Final Conc. (ppm)
NSI	8260 Custom Mix 1	Q-4146	5	50
NSI	8260 Custom Mix 2	Q-4147	5	250
Absolute	n-Hexane	70962	2.5	50
NSI	1+2 Methylnaphthalenes	Q-4260A	2.5	50
NSI	Acrolein	Q-3835	2.5	250
NSI	8260 Gases Mix	CUS-5661	25	50

GRO LCS

The GRO LCS is prepared in methanol in a 10mL volumetric flask by adding:

Manufacturer	Product	Cat. #	Amount added (mL)	Final Conc. (ppm)
NSI	GRO-MO Mix	Q-4208	1	1000

The LCS/LCSD must be prepared in the appropriate matrix (organic-free reagent water, or purified solid) depending upon the matrix within the analytical batch; and contain all of the method target analytes. A subset of the method target analytes could be used based on the project specific requirements.

7.4.2.1 For soil/water autosamplers (5mL), a dilution of 10X is required. The solution is stored in 3mL aliquots in zero headspace vials. The storage temperature is at or below -10° C.

STATE NOTE: South Carolina and the USACE require that all target analytes are present and evaluated in the LCS.

7.5 Surrogate standard stock solutions must be purchased as certified solutions. Certificates must be kept on file. Stock standards must be stored at or below -10° C and have a six month holding time, once opened.

7.5.1 The following are ESC designated volatiles' analysis surrogates:

- toluene-d8
- 4-bromofluorobenzene
- Dibromofluoromethane
- ααα-Trifluorotoluene

Surrogate spiking solutions are purchased from NSI as custom standard Q-4185, or equivalent, at 20,000ug/mL, which contains both internal standards and

Approved ESC Copy
(printed from Adobe)
Approved ESC Copy
(printed from Adobe)

Unless bar coded, any printed copies of this document are considered uncontrolled and for reference only. It is the responsibility of the staff members to ensure that they are using the correct revision of this document by checking the document revision level with that held on the ESC web site.

surrogate compounds. This solution is then diluted by 100X to obtain a 200ug/mL working solution.

7.6 Internal standard stock solutions must be purchased as certified solutions. Certificates must be kept on file. Stock standards must be stored at or below -10° C and have a six month holding time, once opened. [Internal standard and surrogate standard – NSI custom MS/IS/SS mix Q-4185, or equivalent]

7.6.1 The following are ESC designated volatiles' analysis internal standards:

- 1,4-Difluorobenzene
- 2-Bromo-1chloropropane
- 1,4-dichlorobenzene-d4
- pentafluorobenzene

7.7 4-Bromofluorobenzene (BFB) standard - The BFB in the custom internal standard mix is used to verify mass spectrometer tuning. Since internal standards and surrogates are added to all samples and standards, BFB is included as part of our initial calibration and calibration verification standards. Certificates of analysis must be kept on file. Stock standards must be stored at or below -10° C and have a six month holding time, once opened.

7.8 Matrix spike (MS) standard - Stock standards must be stored at or below -10°C and have a six month holding time, once opened. Once diluted, the standard must be replaced weekly.

7.8.1 The matrix spike standard is prepared from the stock standard in Section 7.4.2.

7.8.2 The spike should be at a mid-level of the calibration range. Some contracts may require a site-specific concentration.

7.8.3 Standard spiking practice requires the use of ALL TARGET ANALYTES as specified in Table 11.7 and must be evaluated against the current control limits.

Project Specific Requirements (Non-South Carolina Projects): Individual projects may specify required spike compounds. In addition to any project specific requirements, the following table lists the minimum required compounds that must be included in the spike solution.

Minimum Spiking Compounds for Project Specific Requirements
• 1,1-Dichloroethene
• Trichloroethene
• Chlorobenzene
• Toluene

Approved ESC Copy
(printed from Adobe)
Approved ESC Copy
(printed from Adobe)

Unless bar coded, any printed copies of this document are considered uncontrolled and for reference only. It is the responsibility of the staff members to ensure that they are using the correct revision of this document by checking the document revision level with that held on the ESC web site.

Minimum Spiking Compounds for Project Specific Requirements
• Benzene
• n-Hexane (when requested as a target analyte)

All compounds in the spike solution must be evaluated for acceptable recovery. In the absence of established control limits, default recovery limits are 70 - 130%.

7.8.4 **STATE NOTE:** OHIO VAP SPIKES: Matrix spikes are evaluated using in house limits for only those compounds listed in 7.8.3.

8.0 PROCEDURE

Analysis Summary**:** Volatile compounds are introduced into the gas chromatograph by purge and trap, via the Archon autosampler, as described on Section 2. If soil samples are high in contamination, a methanolic extraction, SOP No.330760, may be necessary prior to purge and trap analysis. Soils require method 5035 for sample preparation, See SOP 330751.

8.1 Chromatographic conditions: All changes in analytical conditions are listed in the Maintenance Log.

8.1.1 Typical conditions for each instrument and column are listed below:

Inlet	off
Detector	200°C
Oven Equib. Time:	0.50 minutes
Oven Max	240°C
Init Temp	45°C hold 1.0 minute
Ramp	20°C/min to 240 hold 1.0 minute

8.1.2 Typical conditions for each autosampler are listed below:

Heating sample	1 minute at 40°C
Purge	11 minutes at 40°C
Desorb	1 minutes at 250°C
Bake	2 minutes at 260°C

8.1.3 Typical condition for each MS detector are listed below:

Electron energy – 70 volts (nominal)
Mass range – 35 to 300 amu
Scan time – 1.2 sec/scan
Manifold vacuum – 3 x 10^{-6} torr

Approved ESC Copy
(printed from Adobe)
Approved ESC Copy
(printed from Adobe)

Unless bar coded, any printed copies of this document are considered uncontrolled and for reference only. It is the responsibility of the staff members to ensure that they are using the correct revision of this document by checking the document revision level with that held on the ESC web site.

8.2 **Initial calibration**

8.2.1 TUNING - Each GC/MS system must be hardware-tuned (1µL = 50ng) with BFB to meet the criteria listed below. The mass-spectrometer must meet acceptable BFB sensitivity criteria before analysis can begin. The instrument must be tuned every 12 hours.

BFB Key Ions and Ion Abundance Criteria	
Mass	Ion Abundance Criteria
50	15.0-40.0% of mass 95
75	30.0-60.0% of mass 95
95	base peak, 100% relative abundance
96	5.0-9.0% of mass 95
173	< 2.0% of mass 174
174	> 50.0% of mass 95
175	5.0-9.0% of mass 174
176	> 95.0%, but less than 101% of mass 174
177	5.0-9.0% of mass 176

8.2.2 Calibration Curve – General Criteria

- A minimum of 5-point calibration is performed using the primary standards listed in Section 7.4.1. Additional levels may be included to better meet project or client requirements. Regardless of the specific number, the calibration levels analyzed should correspond to a range of concentrations expected to be found in samples, without exceeding the working range of the GC/MS system.
- A calibration point must be analyzed at or below the reporting limit. The concentration of the lowest calibration standard analyzed should be at least 3-5 times the MDL. The instrument response must be distinguishable from the instrument background noise. The signal to noise ratio is the magnitude of the signal strength detected by the mass spectrometer relative to the magnitude of the background noise of the instrument. Instrument conditions must be optimized before the analysis of a calibration curve to minimize background effects.

STATE NOTE: A reporting level standard must be run after calibration is complete. This standard is required by the state of North Carolina and is used to verify the low end of the calibration curve.

STATE NOTE: When analyzing samples from MN, the reporting limit must be verified with each calibration or at least monthly. Verification can be performed by re-quantitation of the

Approved ESC Copy
(printed from Adobe)
Approved ESC Copy
(printed from Adobe)

Unless bar coded, any printed copies of this document are considered uncontrolled and for reference only. It is the responsibility of the staff members to ensure that they are using the correct revision of this document by checking the document revision level with that held on the ESC web site.

low calibration standards using the newly updated calibration curve or by analyzing a separate reporting level standard following calibration curve update. This standard must recover ±40% of the expected concentration. If the criteria is not met, a higher level standard may be re-quantitated or analyzed; however the reporting limit must be amended to reflect the increased concentration of the standard utilized. Analytes known to be poor performers are dealt with on a case-by-case basis.

- The highest standard must not exceed the linear range of the detector. The concentration of the highest standard must produce a response, which does not cause the MS detector to become saturated. The highest concentration used in the calibration curve must allow the analyte to meet the calibration requirements outlined in Sections 8.2.6.1, 8.2.6.2 and 8.2.6.3.
- When using Method 5035, SOP #330751, the calibration curve must be prepared in the same solutions used to preserve the field samples.
- The method reference spectra must be updated from the mid-point of each calibration.

STATE NOTE: For Ohio VAP samples, when soil samples are received pre-preserved with sodium bisulfate, calibration standards must also include sodium bisulfate at the same concentration. It is preferred that samples are not chemically preserved in the field and are instead capped and shipped to the laboratory to be frozen with 48 hours of sampling.

8.2.3 Calibration Levels for single analytes

8.2.3.1 Soil Samples - Soil samples are analyzed with a heated purge in the soil chamber of the Archon, or equivalent autosampler. The calibration curve is generated by injecting the following volumes of ICV Mix (See Section 7.4.1) into 5mL of water containing 1g sodium bisulfate.

Approved ESC Copy
(printed from Adobe)
Approved ESC Copy
(printed from Adobe)

Unless bar coded, any printed copies of this document are considered uncontrolled and for reference only. It is the responsibility of the staff members to ensure that they are using the correct revision of this document by checking the document revision level with that held on the ESC web site.

Calibration Curve - GC/MS Soil (into 5mL water)	
Intermediate solution volume (µL)	Concentration of standard (ppb)
0.05	0.5
0.1	1
0.2	2
0.5	5
1	10
2.5	25
5.0	50
10.	100
20.	200

Note 1: When analyzing soil samples by the low-concentration method (Section 8.7.1), the calibration standards must be heated to 40°C ± 1°C prior to purging.

Note 2: Injections should be performed from the lowest to the highest standards with a cleanup injected after the highest standard and followed by the secondary source standard to verify the initial calibration curve.

8.2.3.2 Water Samples - Water samples are run with a heated purge using the Archon, or equivalent autosampler. The calibration curve is generated by injecting the following volumes of ICV Mix (See Section 7.4.1.) into 5mL of water.

Calibration Curve - GC/MS Water (into 5mL water)	
Intermediate solution volume (µL)	Concentration of standard (ppb)
0.05	0.5
0.1	1
0.2	2
0.5	5
1.0	10
2.5	25
5.0	50
10.	100
20.	200

8.2.3.3 The Centurion autosampler, or equivalent, transfers 5mL of sample to the concentrator for purging and requires full VOA vials. The sampler

Approved ESC Copy
(printed from Adobe)
Approved ESC Copy
(printed from Adobe)

Unless bar coded, any printed copies of this document are considered uncontrolled and for reference only. It is the responsibility of the staff members to ensure that they are using the correct revision of this document by checking the document revision level with that held on the ESC web site.

requires 50mL of standard prepared and analyzed using the ICV Mix in Section 7.4.1.

Calibration Curve - GC/MS Water (into 50mL water)	
Intermediate solution volume (µL)	Concentration of standard (ppb)
0.5	0.5
1	1
2	2
5	5
10	10
25	25
50	50
100	100
200	200

8.2.4 Calibration Levels for GRO by MS

8.2.4.1 Soil Samples - Soil samples are analyzed with a heated purge in the soil chamber of the Archon, or equivalent autosampler. The calibration curve is generated by injecting the following volumes of ICV Mix (See Section 7.4.1.) into 5mL of water containing 1g sodium bisulfate.

Calibration Curve - GC/MS Soil (into 5mL water)	
Intermediate solution volume (µL)	Concentration of standard (ppm)
2	0.4
5	1
10	2
20	4
25	5
35	7
50	10
100	20

8.2.5 Internal Standards and Surrogates – Soil/Water

The autosampler adds 1µL of the IS/surrogate mix to each sample. The addition of 1µL of the surrogate spiking/internal standard solution to 5mL of sample is equivalent of 40µg/L of each surrogate standard. Internal standard and surrogate standard are contained within the same spiking mix. Internal Standards are listed Section 7.6.1 and Surrogates are listed in Section 7.5.1.

Approved ESC Copy
(printed from Adobe)
Approved ESC Copy
(printed from Adobe)

Unless bar coded, any printed copies of this document are considered uncontrolled and for reference only. It is the responsibility of the staff members to ensure that they are using the correct revision of this document by checking the document revision level with that held on the ESC web site.

Tabulation of the Internal Standards

Tabulate the area response of the characteristic ions (see Attachment III) against each compound's concentration and each internal standard concentration. Then calculate the response factor (RF) for the quantifying ion of each compound relative to the appropriate internal standard according to the calculation provided in Section 9.1. The internal standards used should permit most of the compounds of interest in a chromatogram to have retention times of 0.80 to 1.20, relative to one of the internal standards. The average RF must be calculated and recorded for each compound.

8.2.5 System Performance Check Compounds (SPCCs) – Soil/Water

A system performance check must be made before the calibration curve can be used. The minimum relative response factor for volatile SPCCs are as follows:

Chloromethane	0.10
1,1-Dichlorethane	0.10
Bromoform	0.10
Chlorobenzene	0.30
1,1,2,2-Tetrachloroethane	0.30

These compounds are typically used to check compound instability and to check for degradation caused by contaminated lines or active sites in the system. Examples of these occurrences are:

Compound	Effect on stability
Chloromethane	This compound is the most likely compound to be lost if the purge flow is too fast.
Bromoform	This compound is one of the compounds most likely to be purged very poorly if the purge flow is too slow. Cold spots and/or active sites in the transfer lines may adversely affect response. Response of the quantitation ion (m/z 173) is directly affected by the tuning of BFB at ions m/z 174/176. Increasing the m/z 174/176 ratio relative to m/z 95 may improve bromoform response.
1,1,2,2-Tetrachlorethane and 1,1-Dichloroethane	Contaminated transfer lines degrade these compounds in purge-and-trap systems. Active sites in trapping materials also can cause problems.

Adjust the purge gas (helium) flow rate to 25-40mL/min on the purge-and-trap device. Optimize the flow rate to provide the best response for chloromethane

Approved ESC Copy
(printed from Adobe)
Approved ESC Copy
(printed from Adobe)

Unless bar coded, any printed copies of this document are considered uncontrolled and for reference only. It is the responsibility of the staff members to ensure that they are using the correct revision of this document by checking the document revision level with that held on the ESC web site.

and bromoform. Excessive flow rate reduces chloromethane response, whereas insufficient flow reduces bromoform response.

8.2.6 Response Factors (RF's) & Calibration Check Compounds (CCC's) - Soil/Water

Using the RF's for the initial calibration curve from Section 8.2.4, calculate and record the percent relative standard deviation (%RSD) for all compounds. Calculate the percent RSD as in Section 9.2. Linearity can be assumed if the RSD criteria is met, thus allowing quantitation calculations to be performed using RF.

8.2.6.1 CCC Criteria - The %RSD for each individual CCC must be less than 30%. The CCCs are:

1,1-Dichloroethene	Toluene
Chloroform	Ethylbenzene
1,2-Dichloropropane	Vinyl chloride

8.2.6.2 Target Analytes and other Non-CCC's - The RSD must meet the following criteria -

<15% RSD for all 8260B Target Analytes
<35% RSD for all 624 Target Analytes
<20% RSD for all KSGRO Samples
<15% RSD for n-Hexane
<10% RSD for all 601/602 Target Analytes

Compounds not meeting the RSD requirement may be considered for linear regression as stated in 8.2.6.3

8.2.6.3 Linear Regression - Criteria

When any compound does not meet the calibration criteria for RF, the analyst must use linear regression. If linear regression is used, it must be noted on the data (preferably on the CCV RF report), next to the affected compound. It must also meet correlation coefficient criteria of 0.99 or better. USACE requires correlation coefficient criteria of 0.995 or better.

Linear regression is achieved by plotting the instrument response versus the concentration of the standards. The resulting regression line must not be forced through the origin and the origin must not be included as a calibration point.

Approved ESC Copy
(printed from Adobe)
Approved ESC Copy
(printed from Adobe)

Unless bar coded, any printed copies of this document are considered uncontrolled and for reference only. It is the responsibility of the staff members to ensure that they are using the correct revision of this document by checking the document revision level with that held on the ESC web site.

Linear regression may not be used for compounds that exceed 40% RSD except for the poor performers listed in section 8.3.4. The RSD for the poor performers cannot exceed a %RSD of 50%. Compound calibration with a %RSD >40 is considered out of control and must be re-calibrated or not used.

For linear regression calculations, see section 9.11.

8.2.6.4 Quadratic Regression - Criteria

In rare instances, quadratic curve fitting may be used; however this type of curve modeling can never be utilized unless historical performance of analytes have exhibited a nonlinear range. Quadratic models cannot be used to extend the calibration range or bypass instrument maintenance.

If a quadratic fit is used, it must be noted on the data (preferably on the CCV RF report), next to the affected compound. It must also meet correlation coefficient criteria of 0.99 or better. USACE requires correlation coefficient criteria of 0.995 or better.

Quadratic regression is achieved by plotting the instrument response versus the concentration of the standards. The resulting regression line must not be forced through the origin and the origin must not be included as a calibration point.

Quadratic modeling may not be used for compounds that exceed 40% RSD except for the poor performers listed in section 8.3.4. The RSD for the poor performers cannot exceed a %RSD of 50%. Compound calibration with a %RSD >40 is considered out of control and must be re-calibrated or not used.

For quadratic model calculations, see section 9.11.

8.2.6.5 Calibration Corrective Action

When the RSD exceeds 15% or linear regression criteria could not be met, plot and inspect the calibration data for abnormal chromatographic responses. The inspection may indicate analytical problems, including errors in standard preparation, the presence of active sites in the chromatographic system, analytes that exhibit poor chromatographic behavior, etc.

If calibration criteria are not met, then one of the following options must be applied to the GC/MS initial calibration:

Approved ESC Copy
(printed from Adobe)
Approved ESC Copy
(printed from Adobe)

Unless bar coded, any printed copies of this document are considered uncontrolled and for reference only. It is the responsibility of the staff members to ensure that they are using the correct revision of this document by checking the document revision level with that held on the ESC web site.

8.2.6.5.1 Adjust the instrument and/or perform instrument maintenance and re-analyze the calibration standards until the RSD of the calibration meets criteria.

8.2.6.5.2 Narrow the calibration range until the response is linear. If the low standard is below the estimated quantitation limit (i.e., for the poor purgers in a commercially available prepared standard mix), then this standard may be dropped. Re-calculate the RSD without the low standard to determine if the RSD meets the QC limit. If the lowest standard is dropped, the reporting limit could require a change. Check with the supervisor to determine if a point can be removed and not affect reporting limits requirements.

Compounds that are very soluble in water generally are poor purgers. The ketones, vinyl acetate, acrolein, and acrylonitrilie fall into this category.

8.3 Calibration Verification

8.3.1 SSCV's

After a successful calibration, a Second Source Calibration Verification (SSCV) must be analyzed to verify the calibration. This standard must be made from a second source, preferable from a different vendor than the calibration standards. The second source calibration standard must perform within following criteria:

CCC and SPCC compounds	+/- 30%
Other compounds (non poor performers)	+/- 40%
Poor Performers (8.3.2)	in-house LCS limits

8.3.2 CCC's

The curve must be verified initially by a calibration standard known as the Initial Calibration Verification standard (ICV). In addition, the same standard is analyzed every 12 hours for continuing calibration verification (CCV). This standard is prepared at or near the mid-point of the calibration curve. A maximum of 20% criteria would be expected for CCC analytes (Listed in Section 8.2.6.1) and n-Hexane when requested as a target analyte.

Compounds on average response factor uses % difference,

$$\% \text{ Difference} = (RF_v - Rf_{ave}) / Rf_{ave} \times 100\%$$

Approved ESC Copy
(printed from Adobe)
Approved ESC Copy
(printed from Adobe)

Unless bar coded, any printed copies of this document are considered uncontrolled and for reference only. It is the responsibility of the staff members to ensure that they are using the correct revision of this document by checking the document revision level with that held on the ESC web site.

Compounds on regression fit model uses percent drift,

% Drift = (Calculated conc - Theoretic conc) / Theoretic conc x 100%

Criteria for both is <= 20%.

8.3.3 SPCC's

The SPCC's must have a minimum response factor as stated in Section 8.2.5. If these criteria are exceeded, then corrective action is required.

8.3.4 All Target Analytes and Non-CCC's

When analyzing 8260 and 624 concurrently, target analytes and non-CCC compounds must meet the criteria established in 624 (Attachment VI) for all analytes on the 624 list. For analytes not on the 624 list, all target analytes (except for the poor performers, as listed below) and non-CCC's must meet a maximum of 40% drift from the calibration curve. The analyst evaluates all analytes carefully and the experience of the analyst weighs heavily when determining the usability of the data.

Poor performers are allowed a maximum of 50% drift from the calibration curve. The poor performers are as follows:

Poor Performing Compounds

Dichlorofluoromethane
Bromomethane
Chloroethane.
2,2-Dichloropropane.
1,2-Dibromo-3-chloropropane
2-Chloroethylvinyl Ether
Acrolein
Vinyl acetate
Trans-1, 4-dichloro-2-butene
Alcohols (Ethanol, TBA, TAA, ETBA, TBF, Butanol)
Iodomethane.
Napthalene
1- Methylnaphthalene
2- Methylnaphthalene
Acetone
2-Butanone
2-Hexanone
4-Methyl-2-pentanone

Approved ESC Copy
(printed from Adobe)
Approved ESC Copy
(printed from Adobe)

Unless bar coded, any printed copies of this document are considered uncontrolled and for reference only. It is the responsibility of the staff members to ensure that they are using the correct revision of this document by checking the document revision level with that held on the ESC web site.

8.3.5 Laboratory Control Standard (LCS)

- Must be prepared near the mid-point of the calibration curve for each batch of samples.
- QC Limits for the laboratory control standard are in Table 11.7, LCS and MS/MSD Criteria.
- If the stated criteria are exceeded, then corrective action is required.
- See Section 11.7.1, on marginal excedences.
- **STATE NOTE:** All **South Carolina** LCS responses must be within 70 – 130%. NO FAILURES are acceptable, qualifiers cannot be used. FAILURES require a batch re-analysis. See Section 10 for QC evaluation.

8.3.6 Internal Standard Evaluation

8.3.6.1 When a calibration is performed at the beginning of an analytical run: The internal standard areas must be evaluated against the mid-point of the curve. Samples are analyzed within a 12-hour window; the internal standards of those samples are evaluated against mid-point of the curve. Then a CCV is analyzed, this is compared to the mid-point of the initial calibration curve. Addition samples are analyzed within a 12-hour window; the internal standards of those samples are evaluated against the previous acceptable CCV.

8.3.6.2 When an analytical run is started using a passing ICV (which is compared against the initial calibration mid-point to verify the calibration curve): Samples are analyzed within a 12-hour window, the internal standards of those samples are evaluated against the daily ICV. Then a CCV is analyzed, this is compared to the mid-point of the curve. Additional samples are analyzed within a 12-hour window; the internal standards of those samples are evaluated against the previous acceptable CCV.

8.4 Gas chromatographic analysis:

8.4.1 Typical sequence order for loading the autosampler with calibration:

Sample/QC Type	Use
Cleanup Blank	Verify system is contamination free
BFB Tune	Tuning criteria
Calibration standard(s)	Initial volatiles calibration and 7-point for GRO (if analyzed)
Second Source Calibration	Verify initial calibration with second source.

Approved ESC Copy
(printed from Adobe)
Approved ESC Copy
(printed from Adobe)

Unless bar coded, any printed copies of this document are considered uncontrolled and for reference only. It is the responsibility of the staff members to ensure that they are using the correct revision of this document by checking the document revision level with that held on the ESC web site.

Sample/QC Type	Use
Verification (SSCV)	
Laboratory Control Sample/ Laboratory Control Sample Duplicate	Laboratory blank, spiked with known amount(s) of analyte of interest
Matrix Spike/Matrix Spike Dup.	Sample spiked with known amount(s) of analytes of interest
Method blank	Ensure that carry over has not occurred from the calibration standard and that the analytical system does not show contamination above the established detection limits
12-hour window	Client samples
Continuing Calibration Verification (CCV)	Single-point calibration verification standard, if needed.
12-hour window	Client samples

8.4.2 Typical sequence order for loading the autosampler with no calibration:

Sample/QC Type	Use
Cleanup Blank	Verify system is contamination free
BFB Tune	Tuning criteria
Initial Calibration Verification (ICV)	Verify initial calibration.
Laboratory Control Sample/ Laboratory Control Sample Duplicate	Laboratory blank, spiked with known amount(s) of analyte of interest
Matrix Spike/Matrix Spike Dup.	Sample spiked with known amount(s) of analytes of interest
Method blank	Ensure that carry over has not occurred from the calibration standard and that the analytical system does not show contamination above the established detection limits
12-hour window	Client samples
Continuing Calibration Verification (CCV)	Single-point calibration verification standard, if needed.
12-hour window	Client samples

8.5 GC/MS Analysis -- Water Samples

8.5.1 Screening the sample prior to purge-and-trap analysis provides guidance on whether sample dilution is necessary and prevents contamination of the purge-and-trap system. Three screening techniques that can be used are the headspace sampler, using a gas chromatograph (GC) equipped with a photo ionization detector (PID) in series with an electrolytic conductivity detector

Approved ESC Copy
(printed from Adobe)
Approved ESC Copy
(printed from Adobe)

Unless bar coded, any printed copies of this document are considered uncontrolled and for reference only. It is the responsibility of the staff members to ensure that they are using the correct revision of this document by checking the document revision level with that held on the ESC web site.

(ELCD) (SW-846 Method 3810), extraction of the sample with hexadecane and analysis of the extract on a GC with a FID and/or an ECD (SW-846 Method 3820), and screening of 5mLs of sample using an HNU or equivalent portable PID.

8.5.2 All samples and standard solutions must be allowed to warm to ambient temperature before analysis.

8.5.3 Set up the GC/MS system as outlined in Section 8.1.

8.5.4 BFB tuning criteria and GC/MS calibration criteria must be met (Section 8.2.1) before analyzing samples.

8.5.5 Rinse a 5mL syringe by filling and discarding 3 times with distilled water. Open the sample and quickly remove a 5mL aliquot. Immediately replace the sample cap and deposit the aliquot into a clean/baked 40mL autosampler vial. Cap quickly and tightly.

All samples analyzed for USACE must be run using the autosampler prep technique. VOA vials for USACE samples must not be opened prior to analysis to minimize target analyte loss.

After the sample has been loaded on the instrument, check the pH of the sample using the remaining sample in the VOA vial. Use universal pH paper and record the sample pH to the nearest whole pH unit. Samples not passing the pH requirements are flagged with a “T2” qualifier.

8.5.6 Sample Dilution -- When necessary, samples can be diluted before purging. This can be performed in a clean/baked 40mL vial that has been filled with 5mL of measured reagent water. The sample is measured through the use of an appropriate microliter syringes.

8.5.7 Compositing samples prior to GC/MS analysis – Site or project-specific requirements may require compositing of samples, which is performed according to the instructions below. Compositing of samples is only performed at the request of the client.

8.5.7.1 Add 5mL of each sample (up to 5 samples are allowed) to a 25mL glass syringe. Practice special precautions to maintain zero headspace in the syringe. Larger volumes of a smaller number of samples may be composited, as long as equal volumes of each sample are used.

8.5.7.2 The samples must be cooled to 4°C or less during composition to minimize the loss of volatiles. Sample vials may be placed in a tray of ice to prevent volatile loss during this process.

Approved ESC Copy
(printed from Adobe)
Approved ESC Copy
(printed from Adobe)

Unless bar coded, any printed copies of this document are considered uncontrolled and for reference only. It is the responsibility of the staff members to ensure that they are using the correct revision of this document by checking the document revision level with that held on the ESC web site.

8.5.7.3 Mix each vial well. Using the 25mL syringe, draw out a 5mL aliquot of sample.

8.5.7.4 Once all the aliquots have been combined in the syringe, invert the syringe several times to mix the aliquots. The sample is now ready to be analyzed.

8.5.7.5 If less than five samples are being used for compositing, a smaller syringe may be used, provided ample volume is obtained for analysis.

NOTE: Samples are not be routinely composited, however, if site-specific requirements state procedures for compositing samples, the laboratory makes every effort to comply with those requirements.

8.5.8 Surrogate/Internal Standards – The autosampler adds 1uL of the IS/surrogate mix to each sample. The addition of 1µL of the surrogate spiking/internal standard solution to 5mL of sample is equivalent of 40µg/L of each surrogate standard. Internal standard and surrogate standard are contained within the same spiking mix.

8.5.9 Refer to SOP 330752 EPA 5030B Purge and Trap for Aqueous Samples and SOP 330751 EPA 5035 for additional information on sample introduction.

8.5.10 If the initial analysis of a sample or a dilution of the sample has a concentration of analytes that exceeds the initial calibration range, the sample must be re-analyzed at a higher dilution. All dilutions must keep the response of the major constituents (previously saturated peaks) in the upper half of the linear range of the curve. Secondary ion quantitation is allowed only when there are sample interferences with the routinely quantitated primary ion. When a sample is analyzed that has saturated the detector, the samples following must be analyzed for contamination. If any sample shows contamination, they must be re-analyzed.

8.6 GC/MS Analysis -- Water-miscible liquids

8.6.1 Water-miscible liquids are analyzed as water samples after first diluting them at least 50-fold with laboratory water.

8.6.2 Initial and serial dilutions can be prepared by pipetting a known amount of the sample to a 50mL volumetric flask and diluting to volume with organic-free reagent water. Transfer immediately to a clean/baked 40mL vial using a 5mL syringe.

Approved ESC Copy
(printed from Adobe)
Approved ESC Copy
(printed from Adobe)

Unless bar coded, any printed copies of this document are considered uncontrolled and for reference only. It is the responsibility of the staff members to ensure that they are using the correct revision of this document by checking the document revision level with that held on the ESC web site.

8.6.3 Alternatively, prepare dilutions directly in a clean/baked 40mL vial filled with organic-free reagent water by adding at least 1µL, but not more than 2500µL of liquid sample. The sample is ready for addition of internal and surrogate standards. Proceed with Section 8.5.8.

8.7 GC/MS Analysis -- Sediment/soil and waste samples

These samples may contain percent quantities of purgeable organics that will contaminate the purge-and-trap system, and require extensive cleanup and instrument downtime. The screening of samples is highly recommended. Screening data should be used in conjunction with site-specific DQOs, if known, to determine whether to use the low-concentration method (0.005 - 1 mg/Kg) or the high-concentration method (> 1 mg/Kg).

8.7.1 Low-concentration method -- This is designed for samples containing individual purgeable compounds of <1 mg/Kg. It is limited to sediment/soil samples and waste that is of a similar consistency (granular and porous). The low-concentration method is based on purging a heated sediment/soil sample mixed with organic-free reagent water containing the surrogate and internal standards. All QC samples and standards are to be analyzed under the same conditions as the samples, using 5g of clean sand or clean soil.

STATE NOTE: This option cannot be used for OH VAP or South Carolina samples. Please refer to SOP 330751 that addresses Method 5035 for sample preparation.

8.7.1.1 Use a 5g sample if the expected concentration is <0.1mg/Kg, or a 1g sample for expected concentrations between 0.1 and 1mg/Kg.

8.7.1.2 The GC/MS system must be set up as in Sections 8.1 and 8.2. This must be done prior to the preparation of the sample to avoid loss of volatiles from standards and samples. Both the initial and daily calibration standards (Sections 8.2 and 8.3) must be heated to 40°C purge temperature. Refer to Method 5035 (SOP #330751) for additional instructions for 8260B soil analysis.

8.7.1.3 The sample consists of the entire contents of the sample container. Do not discard any supernatant liquids. Mix the contents (using slow but precise movement to limit the loss of volatiles) of the sample container with a narrow metal spatula. Weigh the amount determined in Section 8.7.1.1 into a tared purge device. Note and record the actual weight to the nearest 0.1 g.

8.7.1.4 Add distilled water to the purging vial, which contains the weighed amount of sample, and place the vial in the purge-and-trap system.

Approved ESC Copy
(printed from Adobe)
Approved ESC Copy
(printed from Adobe)

Unless bar coded, any printed copies of this document are considered uncontrolled and for reference only. It is the responsibility of the staff members to ensure that they are using the correct revision of this document by checking the document revision level with that held on the ESC web site.

NOTE: Prior to the placement of the vial, the procedures in Sections 8.7.1.4 must be performed rapidly and without interruption to avoid loss of volatile organics. These steps must be performed in a laboratory free of solvent fumes.

8.7.2 High-concentration method -- The method is based on extracting the sediment/soil with methanol. A waste sample is either extracted or diluted, depending on its solubility in methanol. Wastes (i.e., petroleum and coke wastes) that are soluble in methanol are diluted. An aliquot of the extract is added to organic-free reagent water containing surrogate and internal standards. This is purged at ambient temperature. All samples with an expected concentration of >1.0 mg/Kg must be analyzed by this method. See SOP #330753 *Waste Dilution for VOC's* for additional information.

STATE NOTE: This method is not suitable for samples from South Carolina. South Carolina does not recognize the practices in sections 8.7.2.1 or 8.7.2.2. 5035 must be used for all high-level soil samples, see SOP 330751.

8.7.2.1 The sample (for volatile organics) consists of the entire contents of the sample container. Do not discard any supernatant liquids. Mix the contents (using slow but precise movement to limit the loss of volatiles) of the sample container with a narrow metal spatula. For sediment/soil and solid wastes that are insoluble in methanol, weigh 5g (wet weight) of sample into a tared 40-mL vial. Use a top-loading balance. Note and record the actual weight to 0.1g. For waste that is soluble in methanol, tetraglyme, or PEG, weigh 5g (wet weight) into a 40mL vial.

8.7.2.2 Add 5mL Methanol. Shake well for 2 minutes. See SOP 330751.

NOTE: Sections 8.7.2.1 and 8.7.2.2 must be performed rapidly and without interruption to avoid loss of volatile organics. These steps must be performed in a laboratory free from solvent fumes.

8.7.2.3 The GC/MS system must be set up as in Sections 8.1.

8.7.2.4 If a screening procedure was followed, use the estimated concentration to determine the appropriate volume. If the sample was submitted as a high-concentration sample, start with 100µL.

8.7.2.5 In a clean/baked vial filled with reagent water, inject the corresponding aliquot of methanol extract. Immediately cap and place in the autosampler. The autosampler adds 1uL of the IS/surrogate mix to all of the samples.

Approved ESC Copy
(printed from Adobe)
Approved ESC Copy
(printed from Adobe)

Unless bar coded, any printed copies of this document are considered uncontrolled and for reference only. It is the responsibility of the staff members to ensure that they are using the correct revision of this document by checking the document revision level with that held on the ESC web site.

8.7.2.6 Proceed with the analysis as outlined in Sections 8.5.9-8.5.10. Analyze all blanks on the same instrument as that used for the samples. The standards and blanks must also contain 100µL of the dilution solvent to simulate the sample conditions.

8.7.2.7 For a matrix spike in the high-concentration of sediment/soil samples, Add a 100µL aliquot of this extract to 5mL of organic-free reagent water for purging (as per Section 8.7.2.6) in a clean/baked 40mL VOA vial and add 20µL spiking solution, 1µL internal and surrogate standard solution (IS/Surr solution added by autosampler).

8.8 Qualitative Identification

The qualitative identification of compounds determined by this method is based on retention time, and on comparison of the sample mass spectrum, after background correction, with characteristic ions in a reference mass spectrum. The reference mass spectrum must be generated by the laboratory using the conditions of this method. All hits must be visually compared to the reference spectrum for confirmation. The characteristic ions from the reference mass spectrum are defined to be the three ions of greatest relative intensity, or any ions over 30% relative intensity if less than three such ions occur in the reference spectrum. Compounds are identified as present when the criteria below are met.

8.8.1 The intensities of the characteristic ions of a compound maximize in the same scan or within one scan of each other. Selection of a peak by a data system target compound search routine where the search is based on the presence of a target chromatographic peak containing ions specific for the target compound at a compound-specific retention time is accepted as meeting this criterion.

8.8.2 The RRT of the sample component is within + 0.06 RRT units of the RRT of the standard component.

8.8.3 The relative intensities of the characteristic ions agree within 30% of the relative intensities of these ions in the reference spectrum. (Example: For an ion with an abundance of 50% in the reference spectrum the corresponding abundance in a sample spectrum can range between 20% and 80%.)

8.8.4 Structural isomers that produce very similar mass spectra are identified as individual isomers if they have sufficiently different GC retention times. Sufficient GC resolution is achieved if the height of the valley between two isomer peaks is less than 25% of the sum of the two peak heights. Otherwise, structural isomers are identified as isomeric pairs.

Approved ESC Copy
(printed from Adobe)
Approved ESC Copy
(printed from Adobe)

Unless bar coded, any printed copies of this document are considered uncontrolled and for reference only. It is the responsibility of the staff members to ensure that they are using the correct revision of this document by checking the document revision level with that held on the ESC web site.

8.8.5 Identification is hampered when sample components are not resolved chromatographically and produce mass spectra containing ions contributed by more than one analyte. When gas chromatographic peaks obviously represent more than one sample component (i.e., a broadened peak with shoulder(s) or a valley between two or more maxima), appropriate selection of analyte spectra and background spectra are important. Examination of extracted ion current profiles of appropriate ions can aid in the selection of spectra, and in qualitative identification of compounds. When analytes co-elute (i.e., only one chromatographic peak is apparent), the identification criteria can be met, but each analyte spectrum contains extraneous ions contributed by the co-eluting compound.

8.8.6 TIC's - Tentatively Identified Compounds

Periodically, clients may request additional identification of compounds that are not normally calibrated. This identification is limited to the compounds in the current mass spectral library employed by ESC.

For samples containing components not associated with the calibration standards, a library search may be made for the purpose of tentative identification. The necessity to perform this type of identification is determined by the type of analyses being conducted. At the client request, when serving the role of QA (or referee) laboratory, tentatively identified compounds (TICs) must always be reported. Guidelines for making tentative identification are:

(1) Relative intensities of major ions in the reference spectrum (ions >10% of the most abundant ion) should be present in the sample spectrum.

(2) The relative intensities of the major ions should agree within 30% to be consistent with target compound list identification. (Example: For an ion with an abundance of 50% in the standard spectrum the corresponding sample ion abundance must be between 20 and 80%).

(3) Molecular ions present in the reference spectrum should be present in the sample spectrum.

(4) Ions present in the sample spectrum but not in the reference spectrum should be reviewed for possible background contamination or presence of co-eluting compounds.

(5) Ions present in the reference spectrum but not in the sample spectrum must be reviewed for possible subtraction from the sample spectrum because of background contamination or co-eluting peaks. Data system library reduction programs can sometimes create these discrepancies.

Approved ESC Copy
(printed from Adobe)
Approved ESC Copy
(printed from Adobe)

Unless bar coded, any printed copies of this document are considered uncontrolled and for reference only. It is the responsibility of the staff members to ensure that they are using the correct revision of this document by checking the document revision level with that held on the ESC web site.

Computer generated library search routines must not use normalization routines that would misrepresent the library or unknown spectra when compared to each other. Only after visual comparison of sample with the nearest library searches does the mass spectral interpretation specialist assign a tentative identification.

8.9 Quantitative Analysis

8.9.1 When a compound has been identified, the quantitation of that compound is based on the integrated abundance from the EICP of the primary characteristic ion. Quantitation is accomplished using the internal standard technique, as described in Section 9. The internal standard used must be the one nearest the retention time of that of a given analyte.

8.9.2 Sediment/soil samples are reported on a dry weight basis, while sludge and wastes are reported on a wet weight basis. The percent dry weight of the sample (see Section 9.7) must be reported along with the data in either instance. At ESC, the dry weight conversion calculations for sample reporting are performed by the LIMS system. [Dry weight only when requested]. The LIMS Final Client Report represents the reporting basis as either wet weight or dry weight, depending upon the calculation used.

9.0 DATA ANALYSIS AND CALCULATIONS

9.1 Response Factor (RF)

$$RF = \frac{[A_s][C_{is}]}{[A_{is}][C_s]}$$

where:
A_s = Peak area (or height) of the analyte or surrogate.
A_{is} = Peak area (or height) of the internal standard.
C_s = Concentration of the analyte or surrogate, in µg/L.
C_{is} = Concentration of the internal standard, in µg/L.

9.2 Percent Relative Standard Deviation (%RSD)

$$\overline{RF} = \frac{\sum_{i=1}^{n} RF_i}{n} \qquad SD = \sqrt{\frac{\sum_{i=1}^{n}(RF_i - \overline{RF})^2}{n-1}} \qquad RSD = \frac{SD}{\overline{RF}} x100\%$$

where:
RSD = Relative standard deviation.

Approved ESC Copy
(printed from Adobe)
Approved ESC Copy
(printed from Adobe)

Unless bar coded, any printed copies of this document are considered uncontrolled and for reference only. It is the responsibility of the staff members to ensure that they are using the correct revision of this document by checking the document revision level with that held on the ESC web site.

RF = Mean of 5 initial RFs for a compound.
SD = Standard deviation of average RFs for a compound.

9.3 Percent Difference

$$\frac{RFv - RF}{RF} * 100\%$$

where:
RF = Average response factor from initial calibration.
RFv = Response factor from current verification check standard.

9.4 Percent Drift

$$\%Difference = \frac{C_0 - C_1}{C_1} X100$$

where:
C_1 = compound standard concentration
C_0 = measured concentration using selected quantitation method

9.5 Concentration of Target Analytes in Water and Water-Miscible Waste

$$Concentration(ug/L) = \frac{(A_x)(I_s)(D)}{(A_{is})(ave.RF)(V_s)}$$

where:
A_x = Area (or height) of the peak for the analyte in the sample.
A_{is} = Area (or height) of the peak for the internal standard.
I_s = Mass (amount) of the internal standard in the concentrated sample extract (ng). This is not just the mass injected into the instrument, but the total mass of internal standard in the concentrated extract.
D = Dilution factor, if the sample or extract was diluted prior to analysis. If no dilution was made, D = 1. The dilution factor is always dimensionless.
ave.RF = Mean response factor from the initial calibration.
V_s = Volume of the aqueous sample extracted or purged (mL). If units of liters are used for this term, multiply the results by 1000.

Approved ESC Copy
(printed from Adobe)
Approved ESC Copy
(printed from Adobe)

Unless bar coded, any printed copies of this document are considered uncontrolled and for reference only. It is the responsibility of the staff members to ensure that they are using the correct revision of this document by checking the document revision level with that held on the ESC web site.

9.6 Concentration of Target Analytes in Sediment/Soil, Sludge, and Waste

9.6.1 High-concentration procedure

$$\text{Concentration}(ug/L) = \frac{(A_x)(I_s)(V_t)}{(A_{is})(\text{ave.RF})(V_i)(W_s)}$$

where:
A_x, I_s, A_{is}, ave.RF are the same as in water and water-miscible waste above.
Vt = Volume of total extract (µL) (use 10,0000 µL or a factor of this when dilutions are made).
Vi = Volume of extract added (µL) for purging.
Ws = Weight of sample extracted or urged (g). The wet weight or dry weight may be used, depending upon the specific applications of the data.

9.6.2 Low-concentration procedure

$$\text{Concentration}(ug/L) = \frac{(A_x)(I_s)(V_t)}{(A_{is})(\text{ave.RF})(V_i)(W_s)}$$

where:

A, I_s, A_{is}, RF are the same as in water and water-miscible waste above.
V_t = Volume of total extract (µL) (use 10,0000 µL or a factor of this when dilutions are made).
V_i = Volume of extract added (µL) for purging.
W_s = Weight of sample extracted or urged (g). The wet weight or dry weight may be used, depending upon the specific applications of the data.

9.6.2 Soil Weight determination with Methanol (samples received with MeOH).

$$\text{SoilWeight} = \text{VialTotalWeight}(\text{vial},\text{soil},\text{MeOH}) - \text{TareVialWeight} - \text{MeOHWeight}.$$

9.7 Percent Dry Weight

$$\%\text{DryWeight} = \frac{\text{g of dry sample}}{\text{g of sample}} X100$$

Approved ESC Copy
(printed from Adobe)
Approved ESC Copy
(printed from Adobe)

Unless bar coded, any printed copies of this document are considered uncontrolled and for reference only. It is the responsibility of the staff members to ensure that they are using the correct revision of this document by checking the document revision level with that held on the ESC web site.

9.8 Percent Recovery (%R)

$$\%R = \frac{\text{Measured concentration}}{\text{Actual concentration}} \times 100$$

9.9 Relative Percent Difference (RPD)

$$RPD = \frac{|\text{Sample dup1} - \text{Sample dup2}|}{\{(\text{Sample dup1} + \text{Sample dup2})/2\}} \times 100$$

where:

Sample dup1 = the measured concentration of the first sample duplicate
Sample dup2 = the measured concentration of the second sample duplicate

9.10 Correlation Coefficient and Regression Equations

The correlation coefficient is the measure of the degree to which x (the instrument response) and y (standard concentration) relate to each other as a change occurs in one. The correlation coefficient (r) is expressed as:

$$r = \frac{\sum d_x d_y}{\sqrt{\left(\sum d_x^2 \sum d_y^2\right)}}$$

where: d_x and d_y are the deviations from each mean.

9.11 Linear Regression and Quadratic Regression – Forcing through the origin is NOT allowed.

STATE NOTE: For Ohio VAP samples, quadratic curve fitting is only allowed for analytes that do not historically exhibit a linear response. This calibration model may not be utilized to extend the calibration range or bypass instrument maintenance.

Approved ESC Copy
(printed from Adobe)
Approved ESC Copy
(printed from Adobe)

Unless bar coded, any printed copies of this document are considered uncontrolled and for reference only. It is the responsibility of the staff members to ensure that they are using the correct revision of this document by checking the document revision level with that held on the ESC web site.

For a first order linear regression for:

$$Y = a + bX$$

$$b = \frac{\Sigma xy - nXY}{\Sigma x^2 - nX^2}$$

where:
x – the instrument response
y - standard concentration
X - the average instrument response
Y- the average concentration
n – the number of standards

Quadratic regression is mathematically defined as:

$$y = ax^2 + bx + c$$

Quadratic regression is utilized to find a parabola of "best fit" for a set of data generated from the instrument response and the standard concentration.

9.12 For required method performance criteria, see section 10 and 11. For corrective actions, see section 11.0.

10.0 QUALITY CONTROL AND METHOD PERFORMANCE

10.1 All analysts must meet the qualifications specified in SOP 030205, *Technical Training and Personnel Qualifications* before approval to perform this method. Analysts must complete an initial demonstration of proficiency before being approved to perform this method. Continuing proficiency must be demonstrated using proficiency testing, laboratory control sample analysis and/or MDL studies. Method performance is assessed per analyst. Updated method performance records are filed and stored in a central location within the department.

10.2 Batches:

10.3.1 Extraction Batches:

Extraction batches are defined as sets of 1 - 20 samples. Extraction batches must include the following: 1 method blank, 1 Laboratory Control Sample/Laboratory Control Sample Duplicate pair (LCS/LCSD), 1 Matrix Spike/Spike Duplicate (MS/MSD) pair (if sufficient sample is available). Exceptions are made for waste dilution samples where the minimum batch QC must include a blank, an LCS/LCSD pair.

Approved ESC Copy
(printed from Adobe)
Approved ESC Copy
(printed from Adobe)

Unless bar coded, any printed copies of this document are considered uncontrolled and for reference only. It is the responsibility of the staff members to ensure that they are using the correct revision of this document by checking the document revision level with that held on the ESC web site.

Additional instructions on Batch QC including required frequency, acceptance criteria and corrective actions can be found in Section 11 and Tables 11.1 & 11.7.

10.3.2 Analytical Batches (sequences):

Analytical batches analysis must include the following: 1 Initial Calibration Verification (ICV) and BFB tune at the beginning of run, 1 Continuing Calibration Verification (CCV) and BFB tune every 12 hours.

10.3 Perform BFB tune every 12 hours for 8260B, and 6200B. BFB tuning for method 624 is every 24 hours. Tuning acceptance criteria are presented in Section 8.2.1. The computer software automatically evaluates the tune information. The analyst must be aware of the process used. The criteria specified in Section 8.2.1 would typically be derived using three scans: one at the apex and one on both sides of the apex.

10.4 Run a minimum of a 5-point initial calibration curve (3-point can be used if 624/6200B are being run independently of 8260B), using the primary source standards each time major instrument maintenance occurs, or if the CCV does not meet acceptance criteria. Acceptance criteria for initial calibration are presented in Section 8.2. Calibration is verified by analyzing Second Source Calibration Verification (SSCV) standard; acceptance criteria for the SSCV is presented in Section 8.3.1.

10.5 Run a mid-point Initial Calibration Verification (ICV) using the primary source standards every 12 hours before sample analysis. Also run a CCV every 12 hours during an analytical sequence for 8260B, 624 and 6200B. See sections 8.3.2 – 8.3.6 for acceptance criteria.

10.6 Retention Time Windows:

10.6.1 To determine retention time windows for each component in the calibration mix, make three injections of the mid-level standard over the course of 72 hours. Calculate the standard deviation of the three retention times for each analyte in the mix. The retention time window is defined as the mean retention time plus or minus three times the standard deviation of the retention times established during the 72-hour period for each component. The typical estimated retention time windows are set at +/- 0.05 minutes. However, the experience of the analyst weighs heavily in the interpretation of chromatograms. If the standard deviation for a component is zero, substitute the standard deviation of a closely eluting compound to develop a valid retention time window.

10.6.2 Retention time windows must be re-calculated whenever a new column is installed or whenever a major modification has been made to the instrument system.

Approved ESC Copy
(printed from Adobe)
Approved ESC Copy
(printed from Adobe)

Unless bar coded, any printed copies of this document are considered uncontrolled and for reference only. It is the responsibility of the staff members to ensure that they are using the correct revision of this document by checking the document revision level with that held on the ESC web site.

10.6.3 Compounds are identified if they fall within the retention time window specified for that compound.

10.6.4 If the retention time for any internal standard changes by more than 30 seconds from the mid-point of the current initial calibration curve, the chromatographic system must be inspected for malfunction and corrections must be made, as required.

10.7 Instrument maintenance must be performed routinely to optimize instrument performance and improve chromatography. Commonly performed maintenance includes baking traps and columns, polishing detector windows, changing injection port liners, changing pump oil, etc. A new calibration curve must be analyzed following any major maintenance performed on the analytical system.

11.0 DATA VALIDATION AND CORRECTIVE ACTION

11.1 SITE-SPECIFIC requirements and STATE SPECIFIC criteria must be reviewed and used, if known, for data review.

STATE NOTE: If the sample is analyzed in conjunction with the Ohio VAP, corrective action for failing QC (i.e. blank, surrogate, spike, ISTD, etc.) must be performed prior to flagging data, if sufficient sample volume was submitted by the client. Corrective action can include re-analysis, if instrument malfunction is suspected, or re-preparation and re-analysis, if the failure is suspected as either extraction or sample related.

11.2 All data must undergo a primary review by the analyst. The analyst must check the performance of the initial calibration, mid-point check standard, and continuing calibrations to ensure that they meet the criteria of the method. The analyst must review any sample that has quantifiable compounds and make sure that they have been confirmed. The analyst must also verify that reported results are derived from quantitation between the MDL and the highest standard of the initial calibration curve. All calculations must be checked (any dilutions, %solids, etc.). Data must be checked for the presence or absence of appropriate flags. Comments must be noted when data is flagged.

11.4 INITIAL AND CONTINUING CALIBRATION VERIFICATION STANDARD: An Initial Calibration Verification (ICV) standard is analyzed before sample analysis can begin. Ensure that a continuing calibration verification (CCV) standard was analyzed every 12 hours and meets the criteria in Section 8.3. If these criteria are exceeded, corrective action is necessary. If the source of the problem cannot be determined after corrective action has been taken, a new calibration must be generated. This criterion must be met before sample analysis begins and/or re-analysis of all samples up to the last acceptable CCV standard.

Approved ESC Copy
(printed from Adobe)
Approved ESC Copy
(printed from Adobe)

Unless bar coded, any printed copies of this document are considered uncontrolled and for reference only. It is the responsibility of the staff members to ensure that they are using the correct revision of this document by checking the document revision level with that held on the ESC web site.

11.5 METHOD BLANK ASSESSMENT - The analyst must confirm that this blank was analyzed at the required frequency of 1 per batch of 20 samples.

The method blank must not exhibit any contamination of any analyte above ½ the report limit for any of the method target analytes. Corrective action must be performed any time method target analytes are detected above the ½ the report limit to reduce and control contamination.

Corrective Action/ Evaluation:

Blank contamination above ½ the reporting limit - Assess the effect on the samples. Samples containing detectable concentrations at or just above the reporting limit may require re-analysis. Samples with concentrations below the reporting limit require no corrective action.

Blank contamination above the report limit – All samples containing detectable amounts above the reporting limit must be re-analyzed or qualified. Samples with no detectable amounts above the reporting limit do not require re-analysis, but the samples must be qualified with blank contamination and it must be mentioned in the case narrative in the data package.

Instrument blanks may be injected at any time in the sequence to verify absence of contamination. The source of contamination must be investigated and reduced or eliminated. Any time contamination is noted in the method blank, the situation and impact on the data should be discussed in the case narrative.

11.6 LABORATORY CONTROL SAMPLES - Assess that LCSs were prepared at the required frequency of 1 per batch of 20. If the recovery does not meet criteria, see section 11.7.1 for marginal failures. If it is still out of control limits, then all field and QC samples in the batch must be re-analyzed.

REQUIRED RE-ANALYSIS - None of the following compounds can recover beyond established criteria: 1,1-dichloroethene, trichloroethene, chlorobenzene, toluene, and benzene. If any of these compounds fail, the LCS/LCSD and all affected batch samples must be re-analyzed.

STATE NOTE: OHIO VAP LCS/LCSD: LCS's are evaluated only for the compounds listed in 7.8.3. The LCS/LCSD contain all method target analytes. For OHIO VAP and project specific requirements, the LCS/LCSD contains, at a minimum: 1,1-dichloroethene, trichloroethene, chlorobenzene, toluene, benzene, and n-hexane (Ohio VAP) and must meet both the acceptance criteria for accuracy and precision found in Table 11.7.

Approved ESC Copy
(printed from Adobe)
Approved ESC Copy
(printed from Adobe)

Unless bar coded, any printed copies of this document are considered uncontrolled and for reference only. It is the responsibility of the staff members to ensure that they are using the correct revision of this document by checking the document revision level with that held on the ESC web site.

STATE NOTE: SOUTH CAROLINA LCS: responses must be within 70 – 130%. No failures are acceptable; Qualifiers cannot be used. Failures require a batch re-analysis.

Routine LCS Control limits are in Table 11.7. Qualifiers must be applied to any LCS compound that does not meet these criteria and are considered out of control. The percent difference for all method target analytes must be within QC RPD limits. If not, re-analyze the duplicate(s) or prepare a new calibration curve, as necessary.

11.7 LCS/LCSD & MS/MSD CRITERIA

Table 11.7 Laboratory Control Standard and Matrix Spike QC Limits (effective 10/21/04)

ESC Water Acceptance Criteria for LCS and MS/MSD (Limits are subject to change – State Specific Limits may apply*)

ANALYTE	LCS/LCSD LIMITS *	RPD LIMITS	MS/MSD LIMITS*	RPD LIMITS
Dichlorodifluoromethane	42 - 161	26	41 - 139	22
Chloromethane	57 - 139	17	45 - 150	16
Vinyl Chloride	60 - 131	12	40 - 143	20
Bromomethane	24 - 117	17	34 - 110	34
Chloroethane	49 - 143	22	43 - 156	17
Trichlorofluoromethane	60 - 130	12	53 - 123	18
Ethyl Ether	63 - 150	17	61 - 143	18
Acrolein	28 - 115	29	21 - 105	12
1,1-Dichloroethene	67 - 137	10	55 - 143	17
1,1,2-Trichloro-1,2,2-trifluoroethane	73 - 130	10	63 - 139	17
Acetone	36 - 156	38	20 - 148	19
Iodomethane	54 - 118	12	50 - 109	19
Carbon Disulfide	56 - 161	11	50 - 160	17
Methylene Chloride	60 - 125	10	59 - 118	16
Acrylonitrile	47 - 119	18	44 - 118	17
trans-1,2-Dichloroethene	64 - 138	9	63 - 124	17
Methyl Tert Butyl Ether	63 - 126	11	59 - 126	18
1,1-Dichloroethane	50 - 140	11	60 - 117	15
Vinyl Acetate	57 - 133	20	52 - 130	16
Di Isopropyl Ether	55 - 135	11	59 - 120	15
2,2-Dichloropropane	64 - 128	10	60 - 119	16

Approved ESC Copy
(printed from Adobe)
Approved ESC Copy
(printed from Adobe)

Unless bar coded, any printed copies of this document are considered uncontrolled and for reference only. It is the responsibility of the staff members to ensure that they are using the correct revision of this document by checking the document revision level with that held on the ESC web site.

TITLE: VOLATILE ORGANIC COMPOUNDS BY GC/MS (EPA 8260B, 624 AND SM6200B 20TH)

ANALYTE	LCS/LCSD LIMITS *	RPD LIMITS	MS/MSD LIMITS*	RPD LIMITS
cis-1,2-Dichloroethene	64 - 124	12	67 - 112	16
2-Butanone (MEK)	46 - 127	24	41 - 124	23
Bromochloromethane	66 - 128	9	73 - 123	15
Tetrahydrofuran	40 - 126	20	42 - 111	23
Chloroform	67 - 119	10	66 - 111	13
1,1,1-Trichloroethane	52 - 131	12	57 - 118	14
Carbon Tetrachloride	60 - 138	16	63 - 124	13
1,1-Dichloropropene	59 - 127	11	61 - 118	14
Benzene	55 - 129	11	57 - 124	14
1,2-Dichloroethane	56 - 132	12	61 - 127	13
Trichloroethene	68 - 117	11	67 - 109	14
1,2-Dichloropropane	62 - 121	14	64 - 115	16
Dibromomethane	72 - 116	10	72 - 112	14
Bromodichloromethane	68 - 120	9	70 - 114	12
2-Chloroethylvinyl Ether	41 - 115	22	20 - 138	29
cis-1,3-Dichloropropene	68 - 120	17	66 - 110	13
4-Methyl-2-Pentanone (MIBK)	58 - 129	15	57 - 123	17
Toluene	71 - 114	12	68 - 108	14
trans-1,3-Dichloropropene	57 - 104	12	55 - 100	15
1,1,2-Trichloroethane	71 - 117	9	46 - 131	22
Tetrachloroethene	67 - 124	13	62 - 115	13
1,3-Dichloropropane	71 - 114	11	72 - 110	11
2-Hexanone	52 - 133	16	59 - 115	15
Chlorodibromomethane	67 - 117	11	67 - 111	20
1,2-Dibromoethane	71 - 117	13	71 - 114	16
Chlorobenzene	71 - 121	11	70 - 113	13
1,1,1,2-Tetrachloroethane	68 - 125	10	70 - 114	11
Ethylbenzene	70 - 121	10	69 - 109	14
m&p-Xylene	70 - 122	12	67 -110	15
o-Xylene	71 - 116	11	71 - 111	13
Styrene	71 - 116	12	64 - 112	11
Bromoform	70 - 124	10	64 - 112	11
Isopropylbenzene	71 - 123	12	65 - 122	14
Bromobenzene	73 - 123	13	69 - 113	15
1,1,2,2-Tetrachloroethane	63 - 127	13	68 - 121	13

Approved ESC Copy
(printed from Adobe)
Approved ESC Copy
(printed from Adobe)

Unless bar coded, any printed copies of this document are considered uncontrolled and for reference only. It is the responsibility of the staff members to ensure that they are using the correct revision of this document by checking the document revision level with that held on the ESC web site.

TITLE: VOLATILE ORGANIC COMPOUNDS BY GC/MS (EPA 8260B, 624 AND SM6200B 20TH)

ANALYTE	LCS/LCSD LIMITS *	RPD LIMITS	MS/MSD LIMITS*	RPD LIMITS
1,2,3-Trichloropropane	56 - 130	16	66 - 121	11
trans-1,4-Dichloro-2-Butene	52 - 138	13	64 - 114	12
n-Propylbenzene	67 - 124	11	58 - 120	13
2-Chlorotoluene	68 - 121	12	63 - 111	16
4-Chlorotoluene	67 - 126	14	66 - 110	13
1,3,5-Trimethylbenzene	67 - 121	15	67 - 110	15
tert-Butylbenzene	66 - 125	14	65 - 109	13
1,2,4-Trimethylbenzene	64 - 119	14	66 - 114	17
sec-Butylbenzene	67 - 122	11	63 - 108	17
1,3-Dichlorobenzene	67 - 126	13	66 - 112	16
p-Isopropyltoluene	65 - 125	13	64 - 111	14
1,4-Dichlorobenzene	72 - 118	13	64 - 113	17
1,2,3-Trimethylbenzene	63 - 103	12	60 - 111	12
1,2-Dichlorobenzene	74 - 115	11	55 - 98	12
n-Butylbenzene	68 - 124	16	67 - 109	14
1,2-Dibromo-3-Chloropropane	51 - 127	15	54 - 110	14
1,2,4-Trichlorobenzene	71 - 136	18	56 - 109	16
Hexachlorobutadiene	64 - 107	18	52 - 125	17
Naphthalene	77 - 140	16	49 - 104	15
1,2,3-Trichlorobenzene	73 - 143	14	51 - 143	26
SURROGATE LIMITS				
Dibromofluoromethane	79 - 121			
a,a,a-Trifluorotoluene	86 - 113			
Toluene-d8	79 - 118			
4-Bromofluorobenzene	76 - 122			

***STATE NOTE:** SOUTH CAROLINA requires that ALL LCS compounds meet the 70 – 130% acceptance criteria for all target analytes and that all MS/MSD compounds meet the established criteria for all target analytes. No qualifiers are accepted.

Approved ESC Copy
(printed from Adobe)
Approved ESC Copy
(printed from Adobe)

Unless bar coded, any printed copies of this document are considered uncontrolled and for reference only. It is the responsibility of the staff members to ensure that they are using the correct revision of this document by checking the document revision level with that held on the ESC web site.

GENERAL ESC Soil Acceptance Criteria for LCS and MS/MSD
(Limits are subject to change – State Specific Limits may apply*)

ANALYTE	LCS/LCSD LIMITS *	RPD LIMITS	MS/MSD LIMITS*	RPD LIMITS
Dichlorodifluoromethane	71 - 152	16	34 - 129	13
Chloromethane	50 - 153	15	56 - 138	12
Vinyl Chloride	58 - 136	13	56 - 120	20
Bromomethane	34 - 129	27	34 - 99	12
Chloroethane	47 - 135	16	45 - 145	23
Trichlorofluoromethane	51 - 132	15	52 - 107	16
Ethyl Ether	76 - 134	12	68 - 144	9
Acrolein	43 - 104	17	25 - 77	13
1,1-Dichloroethene	65 - 129	13	62 - 127	15
1,1,2-Trichloro-1,2,2-trifluoroethane	65 - 142	13	60 - 121	16
Acetone	48 - 155	20	33 - 112	20
Iodomethane	41 - 124	17	41 - 119	20
Carbon Disulfide	60 - 154	19	50 - 156	16
Methylene Chloride	60 - 127	14	46 - 126	12
Acrylonitrile	54 - 123	15	51 - 108	8
trans-1,2-Dichloroethene	67 - 137	16	66 - 119	15
Methyl Tert Butyl Ether	74 - 123	12	58 - 126	13
1,1-Dichloroethane	57 - 133	14	60 - 116	12
Vinyl Acetate	60 - 142	17	27 - 105	33
Di Isopropyl Ether	65 - 123	13	62 - 119	12
2,2-Dichloropropane	59 - 133	15	54 - 114	14
cis-1,2-Dichloroethene	67 - 126	13	63 - 114	13
2-Butanone (MEK)	57 - 133	14	49 - 124	13
Bromochloromethane	73 - 131	13	66 - 133	8
Tetrahydrofuran	52 - 124	29	39 - 142	20
Chloroform	69 - 119	12	50 - 122	13
1,1,1-Trichloroethane	69 - 112	12	59 - 110	16
Carbon Tetrachloride	63 - 133	13	65 - 109	14
1,1-Dichloropropene	69 - 119	15	60 - 108	15
Benzene	72 - 115	13	62 - 113	14
1,2-Dichloroethane	71 - 119	11	60 - 118	9
Trichloroethene	71 - 120	13	62 - 112	15
1,2-Dichloropropane	72 - 119	14	56 - 124	10

Approved ESC Copy
(printed from Adobe)
Approved ESC Copy
(printed from Adobe)

Unless bar coded, any printed copies of this document are considered uncontrolled and for reference only. It is the responsibility of the staff members to ensure that they are using the correct revision of this document by checking the document revision level with that held on the ESC web site.

ANALYTE	LCS/LCSD LIMITS *	RPD LIMITS	MS/MSD LIMITS*	RPD LIMITS
Dibromomethane	74 - 123	14	66 - 123	8
Bromodichloromethane	72 - 125	14	66 - 121	10
2-Chloroethylvinyl Ether	34 - 132	16	32 - 126	43
cis-1,3-Dichloropropene	74 - 121	16	63 - 118	12
4-Methyl-2-Pentanone (MIBK)	65 - 137	16	63 - 123	10
Toluene	73 - 117	15	59 - 116	22
trans-1,3-Dichloropropene	63 - 108	14	49 - 103	11
1,1,2-Trichloroethane	77 - 115	14	68 - 117	10
Tetrachloroethene	72 - 123	15	54 - 116	10
1,3-Dichloropropane	77 - 114	14	61 - 124	8
2-Hexanone	69 - 126	16	59 - 116	11
Chlorodibromomethane	74 - 117	15	64 - 114	15
1,2-Dibromoethane	74 - 121	14	68 - 118	10
Chlorobenzene	76 - 119	13	62 - 119	9
1,1,1,2-Tetrachloroethane	76 - 120	13	64 - 126	9
Ethylbenzene	72 - 121	14	64 - 113	11
m&p-Xylene	73 - 121	15	62 - 113	16
o-Xylene	71 - 125	15	65 - 120	16
Styrene	71 - 124	16	59 - 115	10
Bromoform	68 - 137	15	61 - 130	12
Isopropylbenzene	71 - 128	17	65 - 114	11
Bromobenzene	75 - 129	15	54 - 134	9
1,1,2,2-Tetrachloroethane	75 - 122	19	72 - 110	12
1,2,3-Trichloropropane	72 - 122	16	59 - 122	16
trans-1,4-Dichloro-2-Butene	51 - 141	19	56 - 116	15
n-Propylbenzene	68 - 130	18	59 - 108	14
2-Chlorotoluene	72 - 122	18	56 - 111	9
4-Chlorotoluene	72 - 126	18	55 - 108	10
1,3,5-Trimethylbenzene	70 - 124	19	60 - 110	16
tert-Butylbenzene	68 - 130	19	63 - 115	11
1,2,4-Trimethylbenzene	67 - 124	18	56 - 110	18
sec-Butylbenzene	69 - 129	19	60 - 107	12
1,3-Dichlorobenzene	72 - 127	18	45 - 113	12
p-Isopropyltoluene	66 - 135	17	54 - 108	11
1,4-Dichlorobenzene	71 - 121	15	40 - 113	10
1,2,3-Trimethylbenzene	62 - 106	13	47 - 102	22

Approved ESC Copy
(printed from Adobe)
Approved ESC Copy
(printed from Adobe)

Unless bar coded, any printed copies of this document are considered uncontrolled and for reference only. It is the responsibility of the staff members to ensure that they are using the correct revision of this document by checking the document revision level with that held on the ESC web site.

TITLE: VOLATILE ORGANIC COMPOUNDS BY GC/MS (EPA 8260B, 624 AND SM6200B 20TH)

ANALYTE	LCS/LCSD LIMITS *	RPD LIMITS	MS/MSD LIMITS*	RPD LIMITS
1,2-Dichlorobenzene	78 - 114	13	48 - 117	12
n-Butylbenzene	69 - 126	13	44 - 97	16
1,2-Dibromo-3-Chloropropane	62 - 127	19	48 - 118	15
1,2,4-Trichlorobenzene	67 - 156	17	41 - 105	16
Hexachlorobutadiene	65 - 113	13	34 - 89	16
Naphthalene	64 - 159	14	54 - 139	17
1,2,3-Trichlorobenzene	68 - 158	15	45 - 114	11
SURROGATE LIMITS				
Dibromofluoromethane	74 - 126			
a,a,a-Trifluorotoluene	85 - 113			
Toluene-d8	87 - 112			
4-Bromofluorobenzene	73 - 127			

***STATE NOTE:** SOUTH CAROLINA requires that ALL LCS compounds meet the 70 – 130% acceptance criteria for all target analytes and that all MS/MSD compounds meet the established criteria for all target analytes. No qualifiers are accepted.

Control limits for laboratory control samples, matrix spikes and surrogates must be updated semi-annually. Even though control charts must be maintained for the LCS, MS and surrogates, the acceptance criteria derived from these charts may not be appropriate if the charted ranges are too wide. Corrective action should be performed to improve analytical procedures and/or instrument conditions in any case where the charted ranges are too wide and new limits generated.

The RPD of batch LCS/LCSD's should fall within the control limits determined from the precision control charts. However, if the RPD is outside these control limits, the batch will not be rejected, as long as the LCS recovery is acceptable. This precision information should be evaluated to see how systematic problems could be identified. If problems are suspected, the method should be fully evaluated.

Approved ESC Copy
(printed from Adobe)
Approved ESC Copy
(printed from Adobe)

Unless bar coded, any printed copies of this document are considered uncontrolled and for reference only. It is the responsibility of the staff members to ensure that they are using the correct revision of this document by checking the document revision level with that held on the ESC web site.

11.7.1 Quality control criteria must be checked for the LCS and LCSD.

LCS or LCSD samples that do not pass the acceptable QC criteria must be re-analyzed. LCS failures can meet marginal excedence criteria below. Normal compound list for 8260/624 contains typical 90 analytes; therefore only five analyte can be considered as marginal excedences. If the failure persists, re-prepare and re-analyze the entire sample batch.

When a large number of analytes exist in the LCS, it is statistically possible for a few analytes to be outside of control limits. Upper and lower marginal excedence (ME) limits are established by +/- four times the standard deviation. The number of marginal excedence is based on the number of analytes in the LCS.

Number of allowable marginal excedences:

90 analytes, 5 analytes allowed in the ME limit
71 – 90 analytes, 4 analytes allowed in the ME limit.
51 – 70 analytes, 3 analytes allowed in the ME limit.
31 – 50 analytes, 2 analytes allowed in the ME limit.
11 – 30 analytes, 1 analyte allowed in the ME limit.
< 11 analytes, no analyte allowed in the ME limit.

Marginal excedences must be random events.

STATE NOTE: For South Carolina and Ohio VAP samples, marginal excedences do not apply. All outliers in QC require corrective action when possible and the data must be flagged when necessary.

11.8 MATRIX SPIKE ASSESSMENT: Assess that matrix spike/matrix spike duplicates were analyzed at required frequency of 1 per batch of 20.

- The analyst also verifies that the samples were spiked at the appropriate level.
- The order of preference for spiking levels is as follows;
  1) If the target analyte concentrations are known, spike to increase the background concentration by a factor of approximately two;
  2) if an action level exists, spike at this level
  3) if neither of the first two conditions apply, spike at a level that corresponds between the low and mid-level calibration standards.
- Acceptance criteria are that all %Recovery and/or RPD results must be within the indicated control limits on the appropriate MS control charts. See Table 11.7 for LCS/LCSD & MS/MSD limits and QC acceptance. If these conditions are not met, perform the following corrective actions as appropriate.
- If both LCS/LCSD and MS/MSD recoveries are unacceptable, then the entire batch of field and QC samples must be re-analyzed.

Approved ESC Copy
(printed from Adobe)
Approved ESC Copy
(printed from Adobe)

Unless bar coded, any printed copies of this document are considered uncontrolled and for reference only. It is the responsibility of the staff members to ensure that they are using the correct revision of this document by checking the document revision level with that held on the ESC web site.

- If the MS/MSD is unacceptable, but the LCS is acceptable, then a potential matrix effect has been identified. Re-analyze to verify the matrix effect. If a matrix effect is still suspected, then the project manager must be contacted to discuss further alternatives and the potential impact on the project. Reported data must be flagged. Reasonable attempts must be made to address matrix interference.

  STATE NOTE: South Carolina requires that all target compounds meet the established MS/MSD criteria. No qualifiers can be applied, except in the circumstance where matrix interference is apparent and confirmed.

  STATE NOTE: OHIO VAP SPIKES: Matrix spikes are evaluated only for the compounds listed in 7.8.3.

PROJECT SPECIFIC CRITERIA (Non-South Carolina Samples): Acceptance criteria are that all %Recovery and/or RPD results meet project-established goals.

11.9 MATRIX SPIKE DUPLICATES: Assess that matrix duplicates were analyzed at required frequency. Acceptance criteria are that all RPD results must be within the indicated control limits on the appropriate precision control charts in Table 11.7. If these conditions are not met, perform the following corrective actions as appropriate.

- Re-analyze the sample to verify a matrix effect.
- If the duplicate precision is still unacceptable, and LCS precision is acceptable, then a potential matrix effect has been identified. The project manager must be contacted to discuss further alternatives and the potential impact on the project.

PROJECT SPECIFIC CRITERIA (Non-South Carolina Samples): Acceptance criteria are that all RPD results meet project-established goals.

11.10 SURROGATE EVALUATION: Check the surrogate calculations for correctness for all samples, blanks, *ICV/CCV/SSCV,* LCS/LCSD, MS, MSD, and MD. The following acceptance criteria apply to surrogate recoveries: The surrogate recoveries for all QC samples must be within established control limits. If the surrogate recoveries are outside limits for Blank, *ICV/CCV/SSCV,* and LCS/LCSD, re-analysis must be performed for verification. If recoveries are still outside control limits, corrective action is necessary. All samples associated with batch or sequence needs to be re-analyzed. The surrogate recoveries for all field samples must be within established control limits. If more than two surrogates recoveries are outside limits, re-analysis must be performed for verification. If recoveries are still outside control limits, corrective action is necessary which includes qualifying data with J1 (outside upper limit) or J2 (outside lower limit). When one or two surrogates fail, data is qualified with J1 (outside upper limit) or J2 (outside lower limit).

STATE NOTE: OHIO VAP: The surrogate recoveries for all field and QC samples must be within established control limits. If the surrogate recoveries are outside limits, re-

Approved ESC Copy
(printed from Adobe)
Approved ESC Copy
(printed from Adobe)

Unless bar coded, any printed copies of this document are considered uncontrolled and for reference only. It is the responsibility of the staff members to ensure that they are using the correct revision of this document by checking the document revision level with that held on the ESC web site.

analysis (undiluted) must be performed for verification. Tfrecoveries are still outside control limits, corrective action is necessary which includes qualifying data with J1 (outside upper limit) or J2 (outside lower limit). The sample(s) needs to be re-analyzed to confirm the failure or following corrective actions.

11.11 INTERNAL STANDARD AREA COUNT: The analyst checks the internal standard area counts for all calibration standards, QC samples, and samples for quantitation. If the area response for any of the internal standards changes by a factor of two (-50% to +100%) as per section 8.3.6, the mass spectrometer must be inspected for malfunctions and corrections must be made, as appropriate. In the event the internal standard area counts fail these criteria, the following corrective actions should be considered.

- Check to be sure there are no errors in the internal standards preparation or addition. Also check instrument performance.
- If any internal standard criteria fails high (> +100%), sample must be re-analyzed with possible dilution. If recoveries are still outside control limits, corrective action is necessary which includes qualifying compounds with associated internal standard with J9 (IS high, data is likely to show low bias).
- If more than two internal standard criteria fails low « -50%), sample must be re-analyzed. If recoveries are still outside control limits, corrective action is necessary which includes qualifying compounds with associated internal standard with *18* (IS low, data is likely to show high bias).
- • If one or two internal standard criteria fails low « -50%), corrective action is necessary which includes qualifying compounds with associated internal standard with *18* (IS low, data is likely to show high bias).

STATE NOTE: OHIO VAP: The analyst checks the internal standard area counts for all calibration standards, QC samples, and samples for quantitation. If the area response for any of the internal standards changes by a factor of two (-50% to +100%) as per section 8.3.6, the mass spectrometer must be inspected for malfunctions and corrections must be made, as appropriate. In the event the internal standard area counts fail these criteria, the following corrective actions should be considered:

- Check to be sure there are no errors in the internal standards preparation or addition. Also check instrument performance.
- If any internal standard criteria fails high (> +100%), **the sample must be re-analyzed undiluted, unless obvious matrix interference is noted.** If recoveries are still outside control limits, corrective action is necessary which includes qualifying compounds with associated internal standard with J9 (IS high, data is likely to show low bias).
- If any internal standard criteria fails low « -50%), **the sample must be re-analyzed sample must be re-analyzed undiluted, unless obvious matrix interference is noted.** If recoveries are still outside control limits, corrective action is necessary which

Approved ESC Copy
(printed from Adobe)
Approved ESC Copy
(printed from Adobe)

Unless bar coded, any printed copies of this document are considered uncontrolled and for reference only. It is the responsibility of the staff members to ensure that they are using the correct revision of this document by checking the document revision level with that held on the ESC web site.

includes qualifying compounds with associated internal standard with J8 (IS low, data is likely to show high bias).

11.12 CALIBRATION RANGE: The analyst must verify all reported results are derived from analytical results that are below the highest standard of the initial calibration curve and above the low standard. Values reported below the low standard are to be reported as estimated values (J values). For samples that exceed the calibration curve, dilute and analyze an appropriate sample aliquot.

11.13 SECOND SOURCE: The second source calibration verification standard must be analyzed following each new initial calibration to verify the validity of the calibration standards. The recovery of the analytes in the SSCV must be within 30% of the expected concentration for CCC and SPCC compounds and within 40% for non-CCC/SPCC compounds. Poor performers listed in section 8.3.4 must recover within in-house calculated LCS recovery acceptance limits. If the SSCV does not meet acceptance criteria, if can be reanalyzed once. If the failure persists, a new initial calibration curve must be prepared and analyzed.

11.14 Data that does not meet acceptable QC criteria may be acceptable for use in certain circumstances.

11.14.1 If a method blank contains an amount of target analyte, but all samples are non-detected or the samples contain analyte at a level that is greater than 10 times the level present in the blank, the data is reported with the appropriate “B” flag.

11.14.1.1 When comparing analyte contamination in the blank to possible analyte contamination in the field sample, utilize the sample concentration without applying the multiplier value unless the same multiplier has been applied to the quantitation of the target analytes in the blank.

11.14.2 If the sample surrogate is above the acceptable QC range, but the samples are non-detected for all target analytes, flag the sample with a J1 and report. If the surrogate is below the acceptable QC range, re-analyze the sample if the surrogate still fails, re-extract and re-analyze or flag data.

11.14.3 Matrix spike failures must be flagged with "J5" (high) or "J6" (low), when QC limits are exceeded. If there is an RPD failure, the data is flagged with a “J3”.

11.15 Quantitation and manual integration of all QC samples and client samples must follow the procedures outlined in SOP 030215, *Manual Integration*. “Before” and “After” quantitation reports must be printed in order to verify that any manual integration is performed properly and consistently.

Approved ESC Copy
(printed from Adobe)
Approved ESC Copy
(printed from Adobe)

Unless bar coded, any printed copies of this document are considered uncontrolled and for reference only. It is the responsibility of the staff members to ensure that they are using the correct revision of this document by checking the document revision level with that held on the ESC web site.

11.16 Data must be checked to ascertain if it conforms to accepted practices. All sample analytical results used for final data reporting must be between the low standard and the high calibration standard. Values falling above the high standard must be diluted and re-analyzed.

11.16.1 Site specific DQO's may allow the reporting of values above the upper calibration standard with an "E" qualifier indicating that the value is known to be greater than the upper calibration limit. The state of South Carolina does not accept the practice of applying "E" qualifiers.

11.16.2 Site specific DQO's may require values below the reporting limit but above the method detection limit be reported as "UJ" or estimated value. The reporting limit is the concentration of the lowest standard used in the calibration.

11.16.3 All tentatively identified compounds (TICs) are reported with a "J" qualifier for estimated value and an "N" for presumptive evidence of material. Corrective actions are described in Section 11.13.

12.0 POLLUTION PREVENTION AND WASTE MANAGEMENT

12.1 The EPA requires that laboratory waste management practice to be conducted consistent with all applicable rules and regulations. Excess reagents, samples and method process wastes must to be characterized and disposed of in an acceptable manner. See SOP# 030301, *Waste Disposal*.

12.2 See SOP #030302, *Pollution Prevention*.

13.0 METHOD MODIFICATIONS/CLARIFICATIONS

13.1 Modifications to this method are noted in the body of the text as state notes. Compliance analyses performed in conjunction with specific state requirements must be performed as noted within the specific state(s) note listed.

14.0 REFERENCES

14.1 "Test Methods for Evaluating Solid Waste", EPA SW-846, Method 8000B (Revision 2, September, 1996)

14.2 "Test Methods for Evaluating Solid Waste", EPA SW-846, Method 8260B (Revision 2, December, 1996)

14.2 Code of Federal Regulations, 40, Part 136, Method 624

14.3 Standard Methods for the Examination of Water and Wastewater, APHA, 20th edition, Method 6200B.

Approved ESC Copy
(printed from Adobe)
Approved ESC Copy
(printed from Adobe)

Unless bar coded, any printed copies of this document are considered uncontrolled and for reference only. It is the responsibility of the staff members to ensure that they are using the correct revision of this document by checking the document revision level with that held on the ESC web site.

14.4 Policy Document, NELAC Standard, Chapter 2: Proficiency Testing Program Standard and the relevant section of NELAC Standard Chapter 5 National Environmental Laboratory Accreditation Conference

Approved ESC Copy
(printed from Adobe)
Approved ESC Copy
(printed from Adobe)

Unless bar coded, any printed copies of this document are considered uncontrolled and for reference only. It is the responsibility of the staff members to ensure that they are using the correct revision of this document by checking the document revision level with that held on the ESC web site.

Attachment I: Revision History

Current Version:

Version	Date	Description of Revisions
16	1/30/09	Technical and Quality Review and update. Updated Table 1; Clarified holding times; Updated Note in Section 7; Updated section 7.4.1 & 7.4.2; Updated section 7.6, 7.8.4, 8.1.2, 8.2.3, 8.2.3.2, 8.2.4.1, 8.2.6.2 & 12.0; Added state note (MN) section 8.2.2, added final bullet item, added state note (OH); Added section 8.2.6.4; section 9.11 (state note), section 11.1 (state note), section 11.7.1 (state note), section 11.13, & 13.1; Ohio VAP approved 1/30/09

Superseded Versions:

This document supersedes the following:

Version	Date	Description of Revisions
0	8/23/94	Origination
1	7/25/95	
2	9/12/97	
3	8/4/98	
4	2/11/00	
5	8/21/00	
6	4/1/01	
7	10/16/01	
8	8/19/02	
9	7/23/03	
10	10/30/03	
11	1/26/04	
12	6/28/04	
13	12/11/04	
14	3/23/05	
15	12/19/07	

Approved ESC Copy
(printed from Adobe)
Approved ESC Copy
(printed from Adobe)

Unless bar coded, any printed copies of this document are considered uncontrolled and for reference only. It is the responsibility of the staff members to ensure that they are using the correct revision of this document by checking the document revision level with that held on the ESC web site.

Attachment II: STATE/AGENCY SPECIFIC CRITERIA

SOUTH CAROLINA

Specific LCS Criteria: Sections 8.3.3, 11.6
Table 11.7 footnote to LCS column

Specific MS Criteria: Table 11.7 footnote to MS column

LCS/MS Standards: Table 11.7 lists the target analytes that are found in the LCS and MS standard solutions

Qualifiers: Disallows the use of "E" qualifiers
Section 8.3.3 disallows LCS failure and therefore "J4" qualifiers

Sample Prep/Collection: Section 4.2 requires the use of 5035
Section 8.7.1 & 8.7.2 disallows the use of soil jar collection and preparation outside of the requirements of 5035
Section 8.7.2.1 & 8.7.2.2 disallows the use of waste dilution and mandates 5035

Specific Product Codes: Non-Preserved VOC's with required 7-day Holding Time and LCS Criteria of 70-130%
V8260SC, V8260AP1SC, V8260AP2SC, V8260AP9SC, V624SC

OHIO VAP

Spike Comp./Evaluation: Section 7.8.4 lists all required spike compounds

Specific LCS Criteria: Sections 8.3.3, 11.6

Specific MS Criteria: Section 10.7

Sample Prep/Collection: Section 4.2 requires the use of 5035
Section 8.7.1 & 8.7.2 does not allow the use of soil jar collection and preparation outside of the requirements of 5035

USACE

Linear Regression Criteria of 0.995: Sections 8.2.6.3, 11.3.3

All Target Analytes required to be present and evaluated in the LCS: Section 7.4.2

Specific LCS Criteria: 11.6

Approved ESC Copy
(printed from Adobe)
Approved ESC Copy
(printed from Adobe)

Unless bar coded, any printed copies of this document are considered uncontrolled and for reference only. It is the responsibility of the staff members to ensure that they are using the correct revision of this document by checking the document revision level with that held on the ESC web site.

USACE *(continued)*

Specific MS Criteria: 11.8

Non-CCC Percent Drift Criteria: Section 8.3.2

Sample Prep Criteria: Section 8.5.5

Approved ESC Copy
(printed from Adobe)
Approved ESC Copy
(printed from Adobe)

Unless bar coded, any printed copies of this document are considered uncontrolled and for reference only. It is the responsibility of the staff members to ensure that they are using the correct revision of this document by checking the document revision level with that held on the ESC web site.

Attachment III: Characteristic Masses (m/z) for Purgeable Organic Compounds as printed from SW-846 Method 8260B Table 5

Compound	Primary Characteristic Ion	Secondary Characteristic Ion(s)
Acetone	58	43
Acetonitrile	41	40, 39
Acrolein	56	55, 58
Acrylonitrile	53	52, 51
Allyl alcohol	57	58, 39
Allyl chloride	76	41, 39, 78
Benzene	78	-
Benzyl chloride	91	126, 65, 128
Bromoacetone	136	43, 138, 93, 95
Bromobenzene	156	77, 158
Bromochloromethane	128	49, 130
Bromodichloromethane	83	85, 127
Bromoform	173	175, 254
Bromomethane	94	96
iso-Butanol	74	43
n-Butanol	56	41
2-Butanone	72	43
n-Butylbenzene	91	92, 134
sec-Butylbenzene	105	134
tert-Butylbenzene	119	91, 134
Carbon disulfide	76	78
Carbon tetrachloride	117	119
Chloral hydrate	82	44, 84, 86, 111
Chloroacetonitrile	48	75
Chlorobenzene	112	77, 114
1-Chlorobutane	56	49
Chlorodibromomethane	129	208, 206
Chloroethane	64 (49*)	66 (51*)
2-Chloroethanol	49	44, 43, 51, 80
Bis(2-chloroethyl) sulfide	109	111, 158, 160
2-Chloroethyl vinyl ether	63	65, 106
Chloroform	83	85
Chloromethane	50 (49*)	52 (51*)
Chloroprene	53	88, 90, 51
3-Chloropropionitrile	54	49, 89, 91
2-Chlorotoluene	91	126
4-Chlorotoluene	91	126
1,2-Dibromo-3-chloropropane	75	155, 157
Dibromochloromethane	129	127
1,2-Dibromoethane	107	109, 188

Approved ESC Copy
(printed from Adobe)
Approved ESC Copy
(printed from Adobe)

Unless bar coded, any printed copies of this document are considered uncontrolled and for reference only. It is the responsibility of the staff members to ensure that they are using the correct revision of this document by checking the document revision level with that held on the ESC web site.

Compound	Primary Characteristic Ion	Secondary Characteristic Ion(s)
Dibromomethane	93	95, 174
1,2-Dichlorobenzene	146	111, 148
1,2-Dichlorobenzene-d4	152	115, 150
1,3-Dichlorobenzene	146	111, 148
1,4-Dichlorobenzene	146	111, 148
cis-1,4-Dichloro-2-butene	75	53, 77, 124, 89
trans-1,4-Dichloro-2-butene	53	88, 75
Dichlorodifluoromethane	85	87
1,1-Dichloroethane	63	65, 83
1,2-Dichloroethane	62	98
1,1-Dichloroethene	96	61, 63
cis-1,2-Dichloroethene	96	61, 98
trans-1,2-Dichloroethene	96	61, 98
1,2-Dichloropropane	63	112
1,3-Dichloropropane	76	78
2,2-Dichloropropane	77	97
1,3-Dichloro-2-propanol	79	43, 81, 49
1,1-Dichloropropene	75	110, 77
cis-1,3-Dichloropropene	75	77, 39
trans-1,3-Dichloropropene	75	77, 39
1,2,3,4-Diepoxybutane	55	57, 56
Diethyl ether	74	45, 59
1,4-Dioxane	88	58, 43, 57
Epichlorohydrin	57	49, 62, 51
Ethanol	31	45, 27, 46
Ethyl acetate	88	43, 45, 61
Ethylbenzene	91	106
Ethylene oxide	44	43, 42
Ethyl methacrylate	69	41, 99, 86, 114
Hexachlorobutadiene	225	223, 227
Hexachloroethane	201	166, 199, 203
Hexane	57	86, 56
2-Hexanone	43	58, 57, 100
2-Hydroxypropionitrile	44	43, 42, 53
Iodomethane	142	127, 141
Isobutyl alcohol	43	41, 42, 74
Isopropylbenzene	105	120
p-Isopropyltoluene	119	134, 91
Malononitrile	66	39, 65, 38
Methacrylonitrile	41	67, 39, 52, 66
Methyl acrylate	55	85
Methyl-t-butyl ether	73	57
Methylene chloride	84	86, 49

Approved ESC Copy
(printed from Adobe)
Approved ESC Copy
(printed from Adobe)

Unless bar coded, any printed copies of this document are considered uncontrolled and for reference only. It is the responsibility of the staff members to ensure that they are using the correct revision of this document by checking the document revision level with that held on the ESC web site.

Compound	Primary Characteristic Ion	Secondary Characteristic Ion(s)
Methyl ethyl ketone	72	43
Methyl iodide	142	127, 141
Methyl methacrylate	69	41, 100, 39
4-Methyl-2-pentanone	100	43, 58, 85
Naphthalene	128	-
Nitrobenzene	123	51, 77
2-Nitropropane	46	-
2-Picoline	93	66, 92, 78
Pentachloroethane	167	130, 132, 165, 169
Propargyl alcohol	55	39, 38, 53
Propiolactone	42	43, 44
Propionitrile (ethyl cyanide)	54	52, 55, 40
n-Propylamine	59	41, 39
n-Propylbenzene	91	120
Pyridine	79	52
Styrene	104	78
1,2,3-Trichlorobenzene	180	182, 145
1,2,4-Trichlorobenzene	180	182, 145
1,1,1,2-Tetrachloroethane	131	133, 119
1,1,2,2-Tetrachloroethane	83	131, 85
Tetrachloroethene	164	129, 131, 166
Toluene	92	91
1,1,1-Trichloroethane	97	99, 61
1,1,2-Trichloroethane	83	97, 85
Trichloroethene	95	97, 130, 132
Trichlorofluoromethane	151	101, 153
1,2,3-Trichloropropane	75	77
1,2,4-Trimethylbenzene	105	120
1,3,5-Trimethylbenzene	105	120
Vinyl acetate	43	86
Vinyl chloride	62	64
o-Xylene	106	91
m-Xylene	106	91
p-Xylene	106	91
Internal Standards/Surrogates:		
Benzene-d6	84	83
Bromobenzene-d5	82	162
Bromochloromethane-d2	51	131
1,4-Difluorobenzene	114	
Chlorobenzene-d5	117	
1,4-Dichlorobenzene-d4	152	115, 150
1,1,2-Trichloroethane-d3	100	
4-Bromofluorobenzene	95	174, 176

Approved ESC Copy
(printed from Adobe)
Approved ESC Copy
(printed from Adobe)

Unless bar coded, any printed copies of this document are considered uncontrolled and for reference only. It is the responsibility of the staff members to ensure that they are using the correct revision of this document by checking the document revision level with that held on the ESC web site.

Compound	Primary Characteristic Ion	Secondary Characteristic Ion(s)
Chloroform-d1	84	
Dibromofluoromethane	113	
4-Bromofluorobenzene	95	174, 176
Chloroform-d1	84	
Dibromofluoromethane	113	
Dichloroethane-d4	102	
Toluene-d8	98	
Pentafluorobenzene	168	
Fluorobenzene	96	77

* Characteristic ion for an ion trap mass spectrometer (to be used when ion-molecule reactions are observed).

Approved ESC Copy
(printed from Adobe)
Approved ESC Copy
(printed from Adobe)

Unless bar coded, any printed copies of this document are considered uncontrolled and for reference only. It is the responsibility of the staff members to ensure that they are using the correct revision of this document by checking the document revision level with that held on the ESC web site.

Attachment IV: Potential Compounds to be Analyzed by this Procedure

Acetone
Acetonitrile
Acrolein
Acrylonitrile
Allyl alcohol
Allyl chloride
Benzene
Benzyl chloride
Bromoacetone
Bromochloromethane (I.S.)
Bromodichloromethane
4-Bromofluorobenzene (Surr.)
Bromoform
Bromomethane
2-Butanone
Carbon disulfide
Carbon tetrachloride
Chloral hydrate
Chlorobenzene
Chlorobenzene d-5 (I.S.)
Chlorodibromomethane
Chloroethane
2-Chloroethanol
bis-(2-Chloroethyl) sulfide
2-Chloroethyl vinyl ether
Chlorofrom
Chloromethane
Chloroprene
3-Chloropropionitrile
1,2- Dibromo-3-chloropropane
1,2-Dibromoethane
Dibromomethane
1,4-Dichloro-2-butene
dichlorodifluoromethane
1,1-Dichloroethane
1,2-Dichloroethane
1,2-Dichloroethane d-4 (surr.)
1,1-Dichloroethene
Trans-1,2-dichloroethene
Cis-1,2-dichloroethene
1,2-dichloropropane
1,3-Dichloro-2-propanol
1,4-Difluorobenzene (I.S.)
1,4-Dioxane
Epichlorohydrin
Ethanol
Ethylbenzene
Ethylene oxide
Ethyl methacrylate
n-Hexane
2-Hexanone
2-Hydroxypropionitrile
Iodomethane
Isobutylalcohol
Malononitrile
Methacrylonitrile
Methylene chloride
Methyl iodide
Methyl methacrylate
4-methyl-2-pentanone
Pentachloroethane
2-picoline
Propargyl alcohol
B-propiolactone
Propionitrile
n-Propylamine
Pyridine
Styrene
1,1,1,2-Tetrachloroethane
1,1,2,2-Tetrachloroethane
Tetrachloroethene
Toluene
Toluene d-8 (surr.)
1,1,1-Trichloroethane
1,1,2-Trichloroethane
Trichloroethene
Trichlorofluoromethane
1,2,3-Trichloropropane
Vinyl acetate
Vinyl chloride
Xylene (total)
1,2,3,4-Diepoxybutane

Approved ESC Copy
(printed from Adobe)
Approved ESC Copy
(printed from Adobe)

Unless bar coded, any printed copies of this document are considered uncontrolled and for reference only. It is the responsibility of the staff members to ensure that they are using the correct revision of this document by checking the document revision level with that held on the ESC web site.

Attachment V: The SIM Mode:

An alternate way of running compounds to achieve lower detection limits is by way of the Single Ion Monitoring (SIM) method. The SIM method allows the Mass spec to dwell on certain ions rather than scanning the full range of masses from 35 to 300. This process allows for much lower detection limit of desired compounds. This method is only for the detection of known compounds while a TIC cannot be performed while running the SIM method. Currently 1,4-Dioxane is the only compound that is analyzed using the SIM method at ESC.

STATE NOTE: This procedure is not required for Ohio VAP samples as action levels for this analyte within the Ohio VAP standards are easily achievable using the normal SCAN mode.

Approved ESC Copy
(printed from Adobe)
Approved ESC Copy
(printed from Adobe)

Unless bar coded, any printed copies of this document are considered uncontrolled and for reference only. It is the responsibility of the staff members to ensure that they are using the correct revision of this document by checking the document revision level with that held on the ESC web site.

Attachment VI: EPA 624 CCC Criteria:

TABLE 5—CALIBRATION AND QC ACCEPTANCE CRITERIA—METHOD 624[a]

Parameter	Range for Q (µ/g/L)	Limit for s (µ/g/L)	Range for X (µ/g/L)	Range for P, P_s (%)
Benzene	12.8 – 27.2	6.9	15.2 – 26.0	37 – 151
Bromodichloromethane	13.1 – 26.9	6.4	10.1 – 28.0	35 – 155
Bromoform	14.2 – 25.8	5.4	11.4 – 31.1	45 – 169
Bromomethane	2.8 – 37.2	17.9	D – 41.2	D – 242
Carbon tetrachloride	14.6 – 25.4	5.2	17.2 – 23.5	70 – 140
Chlorobenzene	13.2 – 26.8	6.3	16.4 – 27.4	37 – 160
Chloroethane	7.6 – 32.4	11.4	8.4 – 40.4	14 – 230
2-Chloroethylvinyl ether	D – 44.8	25.9	D – 50.4	D – 305
Chloroform	13.5 – 26.5	6.1	13.7 – 24.2	51 – 138
Chloromethane	D – 40.8	19.8	D – 45.9	D – 273
Dibromochloromethane	13.5 – 26.5	6.1	13.8 – 26.6	53 – 149
1,2-Dichlorobenzene	12.6 – 27.4	7.1	11.8 – 34.7	18 – 190
1,3-Dichlorobenzene	14.6 – 25.4	5.5	17.0 – 28.8	59 – 156
1,4-Dichlorobenzene	12.6 – 27.4	7.1	11.8 – 34.7	18 – 190
1,1-Dichloroethane	14.5 – 25.5	5.1	14.2 – 28.5	59 – 155
1,2-Dichloroethane	13.6 – 26.4	6.0	14.3 – 27.4	49 – 155
1,1-Dichlorothene	10.1 – 29.9	9.1	3.7 – 42.3	D – 234
trans-1,2-Dichloroethene	13.9 – 26.1	5.7	13.6 – 28.5	54 – 156
1,2-Dichloropropane	6.8 – 33.2	13.8	3.8 – 36.2	D – 210
cis-1,3-Dichloropropene	4.8 – 35.2	15.8	1.0 – 39.0	D – 227
trans-1,3-Dichloropropene	10.0 – 30.0	10.4	7.6 – 32.4	17 – 183
Ethyl benzene	11.8 – 28.2	7.5	17.4 – 26.7	37 – 162
Methylene chloride	12.1 – 27.9	7.4	D – 41.0	D – 221
1,1,2,2-Tetrachloroethane	12.1 – 27.9	7.4	13.5 – 27.2	46 – 157
Tetrachloroethene	14.7 – 25.3	5.0	17.0 – 26.6	64 – 148
Toluene	14.9 – 25.1	4.8	16.6 – 26.7	47 – 150
1,1,1-Trichloroethane	15.0 – 25.0	4.6	13.7 – 30.1	52 – 162
1,1,2-Trichloroethane	14.2 – 25.8	5.5	14.3 – 27.1	52 – 150
Trichloroethene	13.3 – 26.7	6.6	18.6 – 27.6	71 – 157
Trichlorofluoromethane	9.6 – 30.4	10.0	8.9 – 31.5	17 – 181
Vinyl chloride	0.8 – 39.2	20.0	D – 43.5	D – 251

Q= Concentration measured in QC check sample, in µg/L (Section 7.5.3).
s= Standard deviation of four recovery measurements, in µg/L (Section 8.2.4).
X= Average recovery of four recovery measurements, in µg/L (Section 8.2.4).
P, P_s= Percent recovery measured, (Section 8.3.2, Section 8.4.2).
D= Detected; result must be greater than zero.
[a]Criteria were calculated assuming a QC check sample concentration of 20 µg/L.

Approved ESC Copy
(printed from Adobe)
Approved ESC Copy
(printed from Adobe)

Unless bar coded, any printed copies of this document are considered uncontrolled and for reference only. It is the responsibility of the staff members to ensure that they are using the correct revision of this document by checking the document revision level with that held on the ESC web site.

Environmental Science Corporation
SOP/Document REVISION FORM

02/06/07 R.1.0

SOP/DOC# 330363 Current revision date & number: 1/30/09 R16

Procedure/Method : VOLATILE ORGANIC COMPOUNDS BY GC/MS (EPA 8260B, 624 AND SM6200B 20TH)

Date	Analyst	Section	Revision	Reason*	Approvals	
					Supervisor	QA
7/30/09	BW	V	Addition of Oxygenate information - See attachments	SC Oxygenates Addition	BW 120	DRM

DRM 8/6/09

*Comments:

Add to section 7.4.1:

AP9/Oxygenates ICV Standard in 25mL total volume of methanol

Manufacturer	Product	Cat #	Amount Added	Final Concentration (PPM)
Ultra	Custom SC Oxygenates	CUS-8674	0.0625 mL	50
NSI	Custom AP9 Standard	Q-4973	3.125 mL	5

Add to section 7.4.2:

AP9/Oxygenates Second Source Standard in 25mL total volume of methanol

Manufacturer	Product	Cat #	Amount Added	Final Concentration (PPM)
Ultra	Custom AP9 Standard	CUS-9324	3.125 mL	5

Add to section 8.2.3.1:

AP9/Oxygenates Calibration Curve – GC/MS Soil (into 5mL of water)	
Intermediate solution volume (uL)	Concentration of standard (ppb)
1	1
2.5	2.5
5	5
7.5	7.5
10	10
12.5	12.5
15	15
17.5	17.5
20	20

Add to section 8.2.3.2:

AP9/Oxygenates Calibration Curve – GC/MS water (into 5mL of water)	
Intermediate solution volume (uL)	Concentration of standard (ppb)
1	1
2.5	2.5
5	5
7.5	7.5
10	10
12.5	12.5
15	15
17.5	17.5
20	20

Add to section 8.2.3.3:

Calibration Curve – GC/MS water (into 50mL of water)	
Intermediate solution volume (uL)	Concentration of standard (ppb)
10	1
25	2.5
50	5
75	7.5
100	10
125	12.5
150	15
175	17.5
200	20

Add State Note to section 8.2.6.4:

STATE NOTE: For South Carolina samples, quadratic curve fitting is only allowed for analytes that do not historically exhibit a linear response. This calibration model may not be utilized to extend the calibration range or bypass instrument maintenance. Quadratic regression is not allowed for Oxygenate Compounds that have historically demonstrated linearity.

Add Additional State Note following section 9.11 to read:

STATE NOTE: For South Carolina samples, quadratic curve fitting is only allowed for analytes that do not historically exhibit a linear response. This calibration model may not be utilized to extend the calibration range or bypass instrument maintenance. Quadratic regression is not allowed for Oxygenate Compounds that have historically demonstrated linearity.

Environmental Science Corporation
SOP/Document REVISION FORM

10/25/05 R.0

SOP/DOC# VOC by GC/MS 330363 Current revision date & number: 01/30/09 R16

Procedure/Method :

Date	Analyst	Section	Revision	Reason*	Approvals	
					Supervisor	QA
08/25/09	BRW 120	9.11	As an alternative to calculating mean response factors and applying the RSD test, use the GC/MS data system software or other available software to generate a linear or second linear order regression calibration curve by plotting A/A(is) vs. Q(x). Either equal weighting factors or 1/x regressions may be used.	Change in requirements	BRW 120	DRM
			DRM 9/2/09			

Environmental Science Corporation
SOP/Document REVISION FORM

10/25/05 R.0

SOP/DOC# VOC by GC/MS 330363 Current revision date & number: 01/30/09 R16

Procedure/Method :

Date	Analyst	Section	Revision	Reason*	Approvals	
					Supervisor	QA
08/25/09	BW 120	11.11	Client Note: For Marathon, the internal standard area counts for all calibration standards, QC samples, and samples for quantitation must not change by a factor of greater than (-50% to +130%) as per section 8.3.6.	CAR 781	BW 120	DAM

Environmental Science Corporation
SOP/Document REVISION FORM

10/25/05 R.0

SOP/DOC# *8260_624_330363* Current revision date & number: 01/30/09 R17

Procedure/Method : 8260

Date	Analyst	Section	Revision	Reason*	Approvals	
					Supervisor	QA
10/01/09	BW 120	8.2.2	8260C note - The method of linear regression analysis has the potential for a significant bias to the lower portion of a calibration curve, while the relative percent difference and quadratic methods of calibration do not have this potential bias. When calculating the calibration curves using the linear regression model, a minimum quantitation check on the viability of the lowest calibration point should be performed by re-fitting the response from the low concentration calibration standard back into the curve. It is not necessary to re-analyze a low concentration standard, rather the data system can recalculate the concentrations as if it were an unknown sample. The recalculated concentration of the low calibration point should be within ± 30% of the standard's true concentration.	Additions for 8260C	BW 120	
		8.2.6.1	8260C note – The %RSD criteria for each individual CCC does not apply for 8260C.			
		8.2.6.2	8260C - <20%RSD for all 8260C Target Analytes			

		8.2.6	8260C note - Due to the large number of compounds that may be analyzed by this method, some compounds may fail to meet either the 20% RSD, minimum correlation coefficient criteria (0.99), or the acceptance criteria for alternative calibration procedures in Method 8000. Any calibration method stipulated in Method 8000 may be used, but it should be used consistently. It is considered inappropriate once the calibration analyses are completed to select an alternative calibration procedure in order to pass the recommended criteria on a case by case basis. If compounds fail to meet these criteria, the associated concentrations may still be determined but they must be reported as estimated. In order to report non-detects, it must be demonstrated that there is adequate sensitivity to detect the failed compounds at the applicable lower quantitation limit.		JBW 120	NOAM
		8.2.6.5	8260C note - When the RSD exceeds 20% or linear regression criteria could not be met, plot and inspect the calibration data for abnormal chromatographic responses. The inspection may indicate analytical problems, including errors in standard preparation, the presence of active sites in the chromatographic system, analytes that exhibit poor chromatographic behavior, etc.			
		8.3.2	8260C note - All target compounds of interest must be evaluated using a 20% variability criterion. Use percent difference when performing the average response factor model calibration. Use percent drift when calibrating using a regression fit model.			
		10.3/ 10.4/ 10.5	Include 8260C.			
		8.3.2	8260C note - If the percent difference or percent drift for a compound is less than or equal to 20%, then the initial calibration for that compound is assumed to be valid. Due to the large numbers of compounds that may be analyzed by this method, some compounds will fail to meet the criteria. If the criterion is not met (i.e., greater than 20% difference or drift) for more than 20% of the compounds included in the initial calibration, then corrective action must be taken prior to the analysis of samples. In cases where compounds fail, they may still be reported as non-detects if it can be demonstrated that there was adequate sensitivity to detect the compound at the applicable quantitation limit. Forsituations when the failed compound is present, the concentrations must be reported as estimated values.			

Environmental Science Corporation
SOP/Document REVISION FORM

10/25/05 R.0

		8.3.3	8260C note - Calculate the mean response factor and the relative standard deviation (RSD) of the response factors for each target analyte using the following equations. The RSD should be less than or equal to 20% for each target analyte. It is also recommended that a minimum response factor for the most common target analytes as noted in 8.2.5, be demonstrated for each individual calibration level as a means to ensure that these compounds are behaving as expected. In addition, meeting the minimum response factor criteria for the lowest calibration standard is critical in establishing and demonstrating the desired sensitivity. Due to the large number of compounds that may be analyzed by this method, some compounds will fail to meet this criteria. For these occasions, it is acknowledged that the failing compounds may not be critical to the specific project and therefore they may be used as qualified data or estimated values for screening purposes.		BW 120	DM
		8.2.5	Insert attached table 4 for 8260C Min RF's.			
		8.3.5	8260C note - A laboratory control sample (LCS) should be included with each analytical batch. The LCS consists of an aliquot of a clean (control) matrix similar to the sample matrix and of the same weight or volume. The LCS is spiked with the same analytes at the same concentrations as the matrix spike, when appropriate. When the results of the matrix spike analysis indicate a potential problem due to the sample matrix itself, the LCS results are used to verify that the laboratory can perform the analysis in a clean matrix. Also note the LCS for water sample matrices is typically prepared in organic-free reagent water similar to the continuing calibration verification standard. In these situations, a single analysis can be used for both the LCS and continuing calibration verification.			

*Comments:

TABLE 4

RECOMMENDED MINIMUM RELATIVE RESPONSE FACTOR CRITERIA FOR INITIAL AND CONTINUING CALIBRATION VERIFICATION

Volatile Compounds	Minimum Response Factor (RF)[a]	Typical Response Factor (RF)[b]
Dichlorodifluoromethane	0.100	0 327
Chloromethane	0.100	0.537
Vinyl chloride	0.100	0.451
Bromomethane	0.100	0.255
Chloroethane	0.100	0.254
Trichlorofluoromethane	0.100	0.426
1,1-Dichloroethene	0.100	0.313
1,1,2-Trichloro-1,2,2-trifluoroethane	0.100	0.302
Acetone	0.100	0.151
Carbon disulfide	0.100	1.163
Methyl Acetate	0.100	0.302
Methylene chloride	0.100	0.380
trans-1,2-Dichloroethene	0.100	0.351
cis-1,2-Dichloroethene	0.100	0.376
Methyl tert-Butyl Ether	0.100	0.847
1,1-Dichloroethane	0.200	0.655
2-Butanone	0.100	0.216
Chloroform	0.200	0.557
1,1,1-Trichloroethane	0.100	0.442
Cyclohexane	0.100	0.579
Carbon tetrachloride	0.100	0.353
Benzene	0.500	1 368
1,2-Dichloroethane	0.100	0 443
Trichloroethene	0.200	0.338
Methylcyclohexane	0.100	0.501
1,2-Dichloropropane	0.100	0.382

Volatile Compounds	Minimum Response Factor (RF)[a]	Typical Response Factor (RF)[b]
Bromodichloromethane	0.200	0.424
cis-1,3-Dichloropropene	0.200	0.537
trans-1,3-Dichloropropene	0.100	0.515
4-Methyl-2-pentanone	0.100	0.363
Toluene	0.400	1.577
1,1,2-Trichloroethane	0.100	0.518
Tetrachloroethene	0.200	0.606
2-Hexanone	0.100	0 536
Dibromochloromethane	0.100	0 652
1,2-Dibromoethane	0.100	0 634
Chlorobenzene	0.500	1 733
Ethylbenzene	0.100	2.827
meta-/para-Xylene	0.100	1.080
ortho-Xylene	0.300	1.073
Styrene	0.300	1.916
Bromoform	0.100	0.413
Isopropylbenzene	0.100	2.271
1,1,2,2-Tetrachloroethane	0.300	0.782
1,3-Dichlorobenzene	0.600	1.408
1,4-Dichlorobenzene	0.500	1.427
1,2-Dichlorobenzene	0.400	1.332
1,2-Dibromo-3-chloropropane	0.050	0.129
1,2,4-Trichlorobenzene	0.200	0.806

[a] The project-specific response factors obtained may be affected by the quantitation ion selected and when using possible alternate ions the actual response factors may be lower than those listed. In addition, lower than the recommended minimum response factors may be acceptable for those compounds that are not considered critical target analytes and the associated data may be used for screening purposes.

[b] Data provided by EPA Region III laboratory.

Environmental Science Corporation
SOP/Document REVISION FORM

10/25/05 R.0

SOP/DOC# 330363 Current revision date & number: 1/30/09 R16

Procedure/Method : VOC by GC/MS (8260/624)

Date	Analyst	Section	Revision	Reason*	Approvals	
					Supervisor	QA
10/30/09	BW 120	8.3.4	Add Pentachloroethane and Cyclohexanone to the list of poor performers.		BW 120	D

10/30/09 BW

*Comments:

APPENDIX D

Laboratory DoD ELAP Accreditation

Sampling Analysis Plan
Remediation of SWMU 39 TCE Plume
NSA Mid-South
Millington, TN 38054

State of Tennessee

DEPARTMENT OF ENVIRONMENT AND CONSERVATION
DIVISION OF WATER SUPPLY

Certifies That

Environmental Science Corporation

Having Met the Requirements of the Regulations for the Certification of Laboratories Analyzing Drinking Water is hereby Approved as a

State Certified Microbiological Laboratory

To perform

Total Coliform - Enzyme Substrate Method - SM 9223 (Colilert)
Escherichia coli - Enzyme Substrate Method - SM 9223 (Colilert)
Total Coliform – Membrane Filter Method – (m-ColiBlue24)
Escherichia coli – Membrane Filter Method – (m-ColiBlue24)
LT2 Enumeration - SM 9223 (Colilert QuantiTray 51 wells)
LT2 Enumeration - SM 9223 (Colilert QuantiTray 97 wells)
Total Coliform – Membrane Filter Method – SM 9222B
Heterotrophic Bacteria – SM 9215B – (Pour Plate Method)

For the Public Water Systems of Tennessee

Laboratory ID Number TN02006 Effective through October 12,2012

Troy D. Taubert
Lab Certification Officer
Tennessee Division of Water Supply

This certification is subject to laboratory inspections, is nontransferable and supersedes previously issued certificates

Certified Parameters - 2010

TENNESSEE

Environmental Science Corp. TN02006 EPA # TN00003 7/5/2010

Attn: Judy Morgan
12065 Lebanon Rd
MOUNT JULIET, TN 37122-2605

Parameter	EPA Parameter #	Approved Method	Study Type	Date Complete	PT Provider / WS #
Disinfectant Residuals					
Total Chlorine Residual	1012	SM - 4500-Cl G	Proficiency Test	2/25/2010	ERA / WS-162
Disinfection By-Products					
Bromide	1004	EPA - 300.1	Proficiency Test	4/22/2010	ERA / WS-164
Bromide	1004	EPA - 300.0	Proficiency Test	4/22/2010	ERA / WS-164
DOC (dissolved organic carbon)	2923	SM - 5310 C	Proficiency Test	2/25/2010	ERA / WS-162
UV 254 Absorbance	2922	SM - 5910 B	Proficiency Test	2/25/2010	ERA / WS-162
HAA					
Total Haloacetic Acids(five)(HAA5)	2456	EPA - 552.2	Proficiency Test	2/25/2010	ERA / WS-162
THM					
Total Trihalomethanes (TTHM)	2950	EPA - 524.2	Proficiency Test	2/25/2010	ERA / WS-162
Herbicides					
2,4,5-TP (Silvex)	2110	EPA - 515.1	Proficiency Test	2/25/2010	ERA / WS-162
2,4-D	2105	EPA - 515.1	Proficiency Test	2/25/2010	ERA / WS-162
Alachlor	2051	EPA - 507	Proficiency Test	2/25/2010	ERA / WS-162
Atrazine	2050	EPA - 507	Proficiency Test	2/25/2010	ERA / WS-162
Dalaphon	2031	EPA - 515.1	Proficiency Test	2/25/2010	ERA / WS-162
Inorganics					
Alkalinity	1928	SM - 2320 B	Proficiency Test	2/25/2010	ERA / WS-162
Calcium	1016	EPA - 200.7	Proficiency Test	2/25/2010	ERA / WS-162
Calcium Hardness	1916	EPA - 130.2	Proficiency Test	2/25/2010	ERA / WS-162
Calcium Hardness	1916	EPA - 130.1	Proficiency Test	2/25/2010	ERA / WS-162
Chloride	1017	EPA - 300.0	Proficiency Test	2/25/2010	ERA / WS-162
Chloride	1017	EPA - 300.1	Proficiency Test	2/25/2010	ERA / WS-162
Chloride	1017	SM - 4110 B	Proficiency Test	2/25/2010	ERA / WS-162
Conductivity	1064	SM - 2510 B	Proficiency Test	2/25/2010	ERA / WS-162
Cyanide	1024	SM - 4500-CN-E	Proficiency Test	2/25/2010	ERA / WS-162
Cyanide	1024	EPA - 335.4	Proficiency Test	2/25/2010	ERA / WS-162
Cyanide	1024	SM - 4500-CN-G	Proficiency Test	4/22/2010	ERA / WS-162
Cyanide	1024	OTHER - kelada 01	Proficiency Test	4/22/2010	ERA / WS-164
Fluoride	1025	SM - 4110 B	Proficiency Test	2/25/2010	ERA / WS-162

Parameter	EPA Parameter #	Approved Method	Study Type	Date Complete	PT Provider / WS #
Fluoride	1025	EPA - 300.0	Proficiency Test	2/25/2010	ERA / WS-162
Fluoride	1025	EPA - 300.1	Proficiency Test	2/25/2010	ERA / WS-162
Iron	1028	EPA - 200.7	Proficiency Test	2/25/2010	ERA / WS-162
MBAS (Foaming Agent)	1089	SM - 5540 C	Proficiency Test	2/25/2010	ERA / WS-162
Nitrate	1040	EPA - 353.2	Proficiency Test	2/25/2010	ERA / WS-162
Nitrate	1040	EPA - 300.0	Proficiency Test	2/25/2010	ERA / WS-162
Nitrate	1040	SM - 4500-NO3-F	Proficiency Test	2/25/2010	ERA / WS-162
Nitrate	1040	EPA - 300.1	Proficiency Test	2/25/2010	ERA / WS-162
Nitrate	1040	SM - 4110 B	Proficiency Test	2/25/2010	ERA / WS-162
Nitrate + Nitrite	1038	EPA - 300.0	Proficiency Test	2/25/2010	ERA / WS-162
Nitrate + Nitrite	1038	EPA - 353.2	Proficiency Test	2/25/2010	ERA / WS-162
Nitrate + Nitrite	1038	EPA - 300.1	Proficiency Test	2/25/2010	ERA / WS-162
Nitrate + Nitrite	1038	SM - 4500-NO3-F	Proficiency Test	2/25/2010	ERA / WS-162
Nitrite	1041	SM - 4110 B	Proficiency Test	2/25/2010	ERA / WS-162
Nitrite	1041	EPA - 353.2	Proficiency Test	2/25/2010	ERA / WS-162
Nitrite	1041	SM - 4500-NO3-F	Proficiency Test	2/25/2010	ERA / WS-162
Nitrite	1041	EPA - 300.0	Proficiency Test	2/25/2010	ERA / WS-162
Nitrite	1041	EPA - 300.1	Proficiency Test	2/25/2010	ERA / WS-162
Ortho-phosphate	1044	SM - 4500-P E	Proficiency Test	2/25/2010	ERA / WS-162
pH	1925	SM - 4500-H+B	Proficiency Test	2/25/2010	ERA / WS-162
pH	1925	EPA - 150.1	Proficiency Test	2/25/2010	ERA / WS-162
Potassium	1042	EPA - 200.7	Proficiency Test	2/25/2010	ERA / WS-162
Sodium	1052	EPA - 200.7	Proficiency Test	2/25/2010	ERA / WS-162
Sulfate	1055	SM - 4110 B	Proficiency Test	2/25/2010	ERA / WS-162
Sulfate	1055	EPA - 300.0	Proficiency Test	2/25/2010	ERA / WS-162
Sulfate	1055	EPA - 300.1	Proficiency Test	2/25/2010	ERA / WS-162
TDS	1930	SM - 2540 C	Proficiency Test	2/25/2010	ERA / WS-162
TOC (total organic carbon)	2920	SM - 5310 C	Proficiency Test	2/25/2010	ERA / WS-162
Total Hardness	1916	SM - 2340 C	Proficiency Test	2/25/2010	ERA / WS-162
Total Hardness	1916	SM - 2340 B	Proficiency Test	2/25/2010	ERA / WS-162
Turbidity	0100	EPA - 180.1	Proficiency Test	2/25/2010	ERA / WS-162
Turbidity	0100	SM - 2130 B	Proficiency Test	2/25/2010	ERA / WS-162
Perchlorate	1039	EPA - 314.0	Proficiency Test	2/25/2010	ERA / WS-162
[redacted]					
Antimony	1074	EPA - 200.8	Proficiency Test	2/25/2010	ERA / WS-162
Arsenic	1005	EPA - 200.8	Proficiency Test	2/25/2010	ERA / WS-162
Barium	1010	EPA - 200.8	Proficiency Test	2/25/2010	ERA / WS-162
Barium	1010	EPA - 200.7	Proficiency Test	2/25/2010	ERA / WS-162
Beryllium	1075	EPA - 200.7	Proficiency Test	2/25/2010	ERA / WS-162
Beryllium	1075	EPA - 200.8	Proficiency Test	2/25/2010	ERA / WS-162
Cadmium	1015	EPA - 200.7	Proficiency Test	2/25/2010	ERA / WS-162

Parameter	EPA Parameter #	Approved Method	Study Type	Date Complete	PT Provider / WS #
Cadmium	1015	EPA - 200.8	Proficiency Test	2/25/2010	ERA / WS-162
Chromium	1020	EPA - 200.7	Proficiency Test	2/25/2010	ERA / WS-162
Chromium	1020	EPA - 200.8	Proficiency Test	2/25/2010	ERA / WS-162
Copper	1022	EPA - 200.8	Proficiency Test	2/25/2010	ERA / WS-162
Copper	1022	EPA - 200.7	Proficiency Test	2/25/2010	ERA / WS-162
Lead	5000	EPA - 200.8	Proficiency Test	2/25/2010	ERA / WS-162
Magnesium	1031	EPA - 200.7	Proficiency Test	2/25/2010	ERA / WS-162
Manganese	1032	EPA - 200.8	Proficiency Test	2/25/2010	ERA / WS-162
Manganese	1032	EPA - 200.7	Proficiency Test	2/25/2010	ERA / WS-162
Mercury	1035	EPA - 245.1	Proficiency Test	2/25/2010	ERA / WS-162
Nickel	1036	EPA - 200.8	Proficiency Test	2/25/2010	ERA / WS-162
Nickel	1036	EPA - 200.7	Proficiency Test	2/25/2010	ERA / WS-162
Selenium	1045	EPA - 200.8	Proficiency Test	2/25/2010	ERA / WS-162
Thallium	1085	EPA - 200.8	Proficiency Test	2/25/2010	ERA / WS-162
Aluminum	1002	EPA - 200.7	Proficiency Test	2/25/2010	ERA / WS-162
Silver	1050	EPA - 200.7	Proficiency Test	2/25/2010	ERA / WS-162
Silver	1050	EPA - 200.8	Proficiency Test	2/25/2010	ERA / WS-162
Zinc	1095	EPA - 200.8	Proficiency Test	2/25/2010	ERA / WS-162
Zinc	1095	EPA - 200.7	Proficiency Test	2/25/2010	ERA / WS-162
[illegible]					
Escherichia coli, Colilert	3014	SM - 9223	Proficiency Test	2/25/2010	ERA / WS-162
Escherichia coli, Colisure	3014	SM - 9223	Proficiency Test	4/22/2010	ERA / WS-164
Escherichia coli, m-ColiBlue24	3014	-	Proficiency Test	2/25/2010	ERA / WS-162
Heterotrophic Bacteria, Pour plate metho	3001	SM - 9215 B	Proficiency Test	2/25/2010	ERA / WS-162
Total Coliform, Colilert	3000	SM - 9223	Proficiency Test	2/25/2010	ERA / WS-162
Total Coliform, Colisure	3000	SM - 9223	Proficiency Test	4/22/2010	ERA / WS-184
[illegible]					
DBCP (Dibromochloropropane)	2931	EPA - 504.1	Proficiency Test	2/25/2010	ERA / WS-162
EDB (Ethylene dibromide)	2946	EPA - 504.1	Proficiency Test	2/25/2010	ERA / WS-162
[illegible]					
Chlordane	2959	EPA - 508	Proficiency Test	2/25/2010	ERA / WS-162
Endrin	2005	EPA - 508	Proficiency Test	2/25/2010	ERA / WS-162
Heptachlor	2065	EPA - 508	Proficiency Test	2/25/2010	ERA / WS-162
Heptachlor Epoxide	2067	EPA - 508	Proficiency Test	2/25/2010	ERA / WS-162
Hexachlorobenzene	2274	EPA - 508	Proficiency Test	2/25/2010	ERA / WS-162
Lindane	2010	EPA - 508	Proficiency Test	2/25/2010	ERA / WS-162
Methoxychlor	2015	EPA - 508	Proficiency Test	2/25/2010	ERA / WS-162
Simazine	2037	EPA - 507	Proficiency Test	2/25/2010	ERA / WS-162

Parameter	EPA Parameter #	Approved Method	Study Type	Date Complete	PT Provider / WS #
Toxaphene	2020	EPA - 508	Proficiency Test	2/25/2010	ERA / WS-162
VOCs - Regulated					
1,1,1-Trichloroethane	2981	EPA - 524.2	Proficiency Test	2/25/2010	ERA / WS-162
1,1,2-Trichloroethane	2985	EPA - 524.2	Proficiency Test	2/25/2010	ERA / WS-162
1,1-Dichloroethylene	2977	EPA - 524.2	Proficiency Test	2/25/2010	ERA / WS-162
1,2,4-Trichlorobenzene	2378	EPA - 524.2	Proficiency Test	2/25/2010	ERA / WS-162
1,2-Dichlorobenzene	2968	EPA - 524.2	Proficiency Test	2/25/2010	ERA / WS-162
1,2-Dichloroethane	2980	EPA - 524.2	Proficiency Test	2/25/2010	ERA / WS-162
1,2-Dichloropropane	2983	EPA - 524.2	Proficiency Test	2/25/2010	ERA / WS-162
1,4-Dichlorobenzene	2969	EPA - 524.2	Proficiency Test	2/25/2010	ERA / WS-162
Benzene	2990	EPA - 524.2	Proficiency Test	2/25/2010	ERA / WS-162
Carbon Tetrachloride	2982	EPA - 524.2	Proficiency Test	2/25/2010	ERA / WS-162
Chlorobenzene	2989	EPA - 524.2	Proficiency Test	2/25/2010	ERA / WS-162
cis-1,2-Dichloroethylene	2380	EPA - 524.2	Proficiency Test	2/25/2010	ERA / WS-162
Ethylbenzene	2992	EPA - 524.2	Proficiency Test	2/25/2010	ERA / WS-162
Methylene chloride (dichloromethane)	2964	EPA - 524.2	Proficiency Test	2/25/2010	ERA / WS-162
Styrene	2996	EPA - 524.2	Proficiency Test	2/25/2010	ERA / WS-162
Tetrachloroethylene	2987	EPA - 524.2	Proficiency Test	2/25/2010	ERA / WS-162
Toluene	2991	EPA - 524.2	Proficiency Test	2/25/2010	ERA / WS-162
trans-1,2-dichlorbethylene	2979	EPA - 524.2	Proficiency Test	2/25/2010	ERA / WS-162
Trichloroethylene	2984	EPA - 524.2	Proficiency Test	2/25/2010	ERA / WS-162
Vinyl Chloride	2976	EPA - 524.2	Proficiency Test	2/25/2010	ERA / WS-162
Xylenes	2955	EPA - 524.2	Proficiency Test	2/25/2010	ERA / WS-162

State of Tennessee

DEPARTMENT OF ENVIRONMENT AND CONSERVATION
DIVISION OF WATER SUPPLY

Certifies That

Environmental Science Corp.

Having Met the Requirements of the Regulations for the Certification of Laboratories Analyzing Drinking Water is hereby Approved as a

State Certified Laboratory

To perform

Parameters as listed on the certified parameter list

For the Public Water Systems of Tennessee

Laboratory ID Number TN 02006 Effective through June 16, 2013

Troy D. Taubert
Lab Certification Officer
Tennessee Division of Water Supply

This certification is subject to laboratory inspections, is nontransferable and supersedes previously issued certificates

State of New Jersey

DEPARTMENT OF ENVIRONMENTAL PROTECTION

CHRIS CHRISTIE
Governor

KIM GUADAGNO
Lt. Governor

Office of Quality Assurance
401 East State Street
P.O. Box 420, Mail Code 401-02D
Trenton, New Jersey 08625-0420
Telephone: (609) 292-3950
Facsimile: (609) 777-1774

BOB MARTIN
Commissioner

June 23, 2011

Judith R. Morgan
Environmental Science Corporation
12065 Lebanon Rd
Mt. Juliet, TN 37122

Dear Ms. Morgan:

Re: Corrected Annual Certified Parameter List
Laboratory Certification ID# TN002

A corrected Fiscal Year 2012 Annual Certified Parameter List (ACPL) that reflects the current status of your facility is enclosed. If there are any discrepancies, please contact your Laboratory Certification Officer to verify information and make arrangements for a new ACPL.

As always, we are available to discuss any comments or questions. Please do not hesitate to contact your laboratory certification officer or me.

Sincerely,

Joseph F. Aiello, Manager

Enclosures(s)

New Jersey Department of Environmental Protection

National Environmental Laboratory Accreditation Program

ANNUAL CERTIFIED PARAMETER LIST AND CURRENT STATUS

Effective as of 07/01/2011 until 06/30/2012

Laboratory Name: ENVIRONMENTAL SCIENCE CORPORATION Laboratory Number: TN002 Activity ID: NLC110001
12065 LEBANON RD
MT. JULIET, TN 37122

Category: CAP01 -- Atmos. Inorg. Parameters, Non-Metals

Status	Eligible to Report NJ Data	State	Code	Matrix	Technique Description	Approved Method	Parameter Description
Certified	Yes	NJ	CAP01.00005	AE	Thermal Conductivity	[EPA 3C]	Carbon Dioxide
Certified	Yes	NJ	CAP01.00068	AE	Thermal Conductivity	[EPA 3C]	Methane
Certified	Yes	NJ	CAP01.00070	AE	Thermal Conductivity	[EPA 3C]	Nitrogen
Certified	Yes	NJ	CAP01.00100	AE	Thermal Conductivity	[EPA 3C]	Oxygen

Category: CAP03 -- Atmospheric Organic Parameters

Status	Eligible to Report NJ Data	State	Code	Matrix	Technique Description	Approved Method	Parameter Description
Certified	Yes	NJ	CAP03.00010	AE	Sampling, Tedlar Bags	[EPA 0040]	Hazardous organics
Certified	Yes	NJ	CAP03.00180	AE	GC/MS, Canisters	[EPA TO-15]	Acetaldehyde
Certified	Yes	NJ	CAP03.00184	AE	GC/MS, Canisters	[EPA TO-15]	Acetone
Certified	Yes	NJ	CAP03.00185	AE	GC/MS, Canisters	[EPA TO-15]	Acetonitrile
Certified	Yes	NJ	CAP03.00215	AE	GC/MS, Canisters	[EPA TO-15]	Allyl chloride
Certified	Yes	NJ	CAP03.00225	AE	GC/MS, Canisters	[EPA TO-15]	Benzene
Certified	Yes	NJ	CAP03.00230	AE	GC/MS, Canisters	[EPA TO-15]	Benzyl chloride
Certified	Yes	NJ	CAP03.00250	AE	GC/MS, Canisters	[EPA TO-15]	Bromodichloromethane
Certified	Yes	NJ	CAP03.00255	AE	GC/MS, Canisters	[EPA TO-15]	Bromoform
Certified	Yes	NJ	CAP03.00260	AE	GC/MS, Canisters	[EPA TO-15]	Bromomethane
Certified	Yes	NJ	CAP03.00265	AE	GC/MS, Canisters	[EPA TO-15]	Butadiene (1,3-)
Certified	Yes	NJ	CAP03.00270	AE	GC/MS, Canisters	[EPA TO-15]	Carbon disulfide
Certified	Yes	NJ	CAP03.00275	AE	GC/MS, Canisters	[EPA TO-15]	Carbon tetrachloride
Certified	Yes	NJ	CAP03.00300	AE	GC/MS, Canisters	[EPA TO-15]	Chlorobenzene
Certified	Yes	NJ	CAP03.00305	AE	GC/MS, Canisters	[EPA TO-15]	Chloroethane
Certified	Yes	NJ	CAP03.00310	AE	GC/MS, Canisters	[EPA TO-15]	Chloroform
Certified	Yes	NJ	CAP03.00315	AE	GC/MS, Canisters	[EPA TO-15]	Chloromethane
Certified	Yes	NJ	CAP03.00325	AE	GC/MS, Canisters	[EPA TO-15]	Chlorotoluene (2-)
Certified	Yes	NJ	CAP03.00335	AE	GC/MS, Canisters	[EPA TO-15]	Cyclohexane
Certified	Yes	NJ	CAP03.00342	AE	GC/MS, Canisters	[EPA TO-15]	Dibromochloromethane
Certified	Yes	NJ	CAP03.00350	AE	GC/MS, Canisters	[EPA TO-15]	Dibromoethane (1,2-) (EDB)
Certified	Yes	NJ	CAP03.00355	AE	GC/MS, Canisters	[EPA TO-15]	Dichlorobenzene (1,2-)

KEY: AE = Air and Emissions, BT = Biological Tissues, DW = Drinking Water, NPW = Non-Potable Water, SCM = Solid and Chemical Materials

New Jersey Department of Environmental Protection

National Environmental Laboratory Accreditation Program

ANNUAL CERTIFIED PARAMETER LIST AND CURRENT STATUS

Effective as of 07/01/2011 until 06/30/2012

Laboratory Name: ENVIRONMENTAL SCIENCE CORPORATION Laboratory Number: TN002 Activity ID: NLC110001
12065 LEBANON RD
MT. JULIET, TN 37122

Category: CAP03 – Atmospheric Organic Parameters

Status	Eligible to Report NJ Data	State	Code	Matrix	Technique Description	Approved Method	Parameter Description
Certified	Yes	NJ	CAP03.00360	AE	GC/MS, Canisters	[EPA TO-15]	Dichlorobenzene (1,3-)
Certified	Yes	NJ	CAP03.00365	AE	GC/MS, Canisters	[EPA TO-15]	Dichlorobenzene (1,4-)
Certified	Yes	NJ	CAP03.00368	AE	GC/MS, Canisters	[EPA TO-15]	Dichlorodifluoromethane
Certified	Yes	NJ	CAP03.00370	AE	GC/MS, Canisters	[EPA TO-15]	Dichloroethane (1,1-)
Certified	Yes	NJ	CAP03.00375	AE	GC/MS, Canisters	[EPA TO-15]	Dichloroethane (1,2-)
Certified	Yes	NJ	CAP03.00380	AE	GC/MS, Canisters	[EPA TO-15]	Dichloroethene (1,1-)
Certified	Yes	NJ	CAP03.00384	AE	GC/MS, Canisters	[EPA TO-15]	Dichloroethene (cis-1,2-)
Certified	Yes	NJ	CAP03.00385	AE	GC/MS, Canisters	[EPA TO-15]	Dichloroethene (trans-1,2-)
Certified	Yes	NJ	CAP03.00395	AE	GC/MS, Canisters	[EPA TO-15]	Dichloropropane (1,2-)
Certified	Yes	NJ	CAP03.00400	AE	GC/MS, Canisters	[EPA TO-15]	Dichloropropene (cis-1,3-)
Certified	Yes	NJ	CAP03.00401	AE	GC/MS, Canisters	[EPA TO-15]	Dichloropropene (trans-1,3-)
Certified	Yes	NJ	CAP03.00405	AE	GC/MS, Canisters	[EPA TO-15]	Dichlorotetrafluoroethane (1,2-)
Certified	Yes	NJ	CAP03.00440	AE	GC/MS, Canisters	[EPA TO-15]	Dioxane (1,4-)
Applied	No	NJ	CAP03.00451	AE	GC/MS, Canisters	[EPA TO-15]	Ethanol
Certified	Yes	NJ	CAP03.00465	AE	GC/MS, Canisters	[EPA TO-15]	Ethylbenzene
Certified	Yes	NJ	CAP03.00480	AE	GC/MS, Canisters	[EPA TO-15]	Ethyltoluene (4-)
Certified	Yes	NJ	CAP03.00487	AE	GC/MS, Canisters	[EPA TO-15]	Gasoline range organic
Certified	Yes	NJ	CAP03.00490	AE	GC/MS, Canisters	[EPA TO-15]	Hexachlorobutadiene (1,3-)
Certified	Yes	NJ	CAP03.00498	AE	GC/MS, Canisters	[EPA TO-15]	Hexanone (2-)
Certified	Yes	NJ	CAP03.00500	AE	GC/MS, Canisters	[EPA TO-15]	Heptane (n-)
Certified	Yes	NJ	CAP03.00505	AE	GC/MS, Canisters	[EPA TO-15]	Hexane (n-)
Certified	Yes	NJ	CAP03.00511	AE	GC/MS, Canisters	[EPA TO-15]	Isopropanol
Certified	Yes	NJ	CAP03.00515	AE	GC/MS, Canisters	[EPA TO-15]	Isopropylbenzene
Certified	Yes	NJ	CAP03.00520	AE	GC/MS, Canisters	[EPA TO-15]	Methyl alcohol (Methanol)
Certified	Yes	NJ	CAP03.00525	AE	GC/MS, Canisters	[EPA TO-15]	Methyl ethyl ketone
Certified	Yes	NJ	CAP03.00530	AE	GC/MS, Canisters	[EPA TO-15]	Methyl iodide
Certified	Yes	NJ	CAP03.00535	AE	GC/MS, Canisters	[EPA TO-15]	Methyl isobutyl ketone (MIBK)
Certified	Yes	NJ	CAP03.00545	AE	GC/MS, Canisters	[EPA TO-15]	Methyl methacrylate
Certified	Yes	NJ	CAP03.00550	AE	GC/MS, Canisters	[EPA TO-15]	Methyl tert-butyl ether
Certified	Yes	NJ	CAP03.00555	AE	GC/MS, Canisters	[EPA TO-15]	Methylene chloride (Dichloromethane)
Certified	Yes	NJ	CAP03.00567	AE	GC/MS, Canisters	[EPA TO-15]	Naphthalene
Certified	Yes	NJ	CAP03.00612	AE	GC/MS, Canisters	[EPA TO-15]	Propylene

KEY: AE = Air and Emissions, BT = Biological Tissues, DW = Drinking Water, NPW = Non-Potable Water, SCM = Solid and Chemical Materials

New Jersey Department of Environmental Protection

National Environmental Laboratory Accreditation Program

ANNUAL CERTIFIED PARAMETER LIST AND CURRENT STATUS

Effective as of 07/01/2011 until 06/30/2012

Laboratory Name: ENVIRONMENTAL SCIENCE CORPORATION Laboratory Number: TN002 Activity ID: NLC110001
12065 LEBANON RD
MT. JULIET, TN 37122

Category: CAP03 – Atmospheric Organic Parameters

Status	Eligible to Report NJ Data	State	Code	Matrix	Technique Description	Approved Method	Parameter Description
Certified	Yes	NJ	CAP03.00625	AE	GC/MS, Canisters	[EPA TO-15]	Styrene
Certified	Yes	NJ	CAP03.00635	AE	GC/MS, Canisters	[EPA TO-15]	Trichlorobenzene (1,2,4-)
Certified	Yes	NJ	CAP03.00640	AE	GC/MS, Canisters	[EPA TO-15]	Trimethylbenzene (1,3,5-)
Certified	Yes	NJ	CAP03.00645	AE	GC/MS, Canisters	[EPA TO-15]	Trimethylbenzene (1,2,4-)
Certified	Yes	NJ	CAP03.00650	AE	GC/MS, Canisters	[EPA TO-15]	Trimethylpentane (2,2,4-)
Certified	Yes	NJ	CAP03.00652	AE	GC/MS, Canisters	[EPA TO-15]	Tert-butyl alcohol
Certified	Yes	NJ	CAP03.00655	AE	GC/MS, Canisters	[EPA TO-15]	Tetrachloroethane (1,1,2,2-)
Certified	Yes	NJ	CAP03.00660	AE	GC/MS, Canisters	[EPA TO-15]	Tetrachloroethene
Certified	Yes	NJ	CAP03.00662	AE	GC/MS, Canisters	[EPA TO-15]	Tetrahydrofuran
Certified	Yes	NJ	CAP03.00665	AE	GC/MS, Canisters	[EPA TO-15]	Toluene
Certified	Yes	NJ	CAP03.00670	AE	GC/MS, Canisters	[EPA TO-15]	Trichloroethane (1,1,1-)
Certified	Yes	NJ	CAP03.00675	AE	GC/MS, Canisters	[EPA TO-15]	Trichloroethane (1,1,2-)
Certified	Yes	NJ	CAP03.00680	AE	GC/MS, Canisters	[EPA TO-15]	Trichloroethene
Certified	Yes	NJ	CAP03.00684	AE	GC/MS, Canisters	[EPA TO-15]	Trichlorofluoromethane
Certified	Yes	NJ	CAP03.00685	AE	GC/MS, Canisters	[EPA TO-15]	Trichloro (1,1,2-) trifluoroethane (1,2,2-)
Certified	Yes	NJ	CAP03.00700	AE	GC/MS, Canisters	[EPA TO-15]	Vinyl acetate
Certified	Yes	NJ	CAP03.00705	AE	GC/MS, Canisters	[EPA TO-15]	Vinyl bromide
Certified	Yes	NJ	CAP03.00710	AE	GC/MS, Canisters	[EPA TO-15]	Vinyl chloride
Certified	Yes	NJ	CAP03.00715	AE	GC/MS, Canisters	[EPA TO-15]	Xylene (m-)
Certified	Yes	NJ	CAP03.00720	AE	GC/MS, Canisters	[EPA TO-15]	Xylene (o-)
Certified	Yes	NJ	CAP03.00725	AE	GC/MS, Canisters	[EPA TO-15]	Xylene (p-)
Certified	Yes	NJ	CAP03.00730	AE	GC/MS, Canisters	[EPA TO-15]	Xylenes (total)

Category: SDW01 – Microbiological Parameters

Status	Eligible to Report NJ Data	State	Code	Matrix	Technique Description	Approved Method	Parameter Description
Applied	No	NJ	SDW01.05000	DW	ONPG-MUG (Autoanalysis Colilert System) (P-A)	[SM 9223B]	Total coliform / E. coli
Applied	No	NJ	SDW01.06021	DW	Membrane Filter - M-Colihlue 24 Test, Enumeration	[OTHER Hach Company]	Total coliform / E. coli
Certified	Yes	NJ	SDW01.14500	DW	Filtration/MS/FA	[EPA 1622] [EPA 1623]	Cryptosporidium

KEY: AE = Air and Emissions, BT = Biological Tissues, DW = Drinking Water, NPW = Non-Potable Water, SCM = Solid and Chemical Materials

New Jersey Department of Environmental Protection

National Environmental Laboratory Accreditation Program

ANNUAL CERTIFIED PARAMETER LIST AND CURRENT STATUS

Effective as of 07/01/2011 until 06/30/2012

Laboratory Name: ENVIRONMENTAL SCIENCE CORPORATION Laboratory Number: TN002 Activity ID: NLC110001
12065 LEBANON RD
MT. JULIET, TN 37122

Category: SDW02 – Inorganic Parameters Including Na + Ca

Status	Eligible to Report NJ Data	State	Code	Matrix	Technique Description	Approved Method	Parameter Description
Certified	Yes	NJ	SDW02.01000	DW	Nephelometric	[EPA 180.1] [SM 2130 B]	Turbidity
Certified	Yes	NJ	SDW02.02000	DW	Automated Cadmium Reduction	[EPA 353.2] [SM 4500-NO3 F]	Nitrate
Certified	Yes	NJ	SDW02.04000	DW	Ion Chromatography	[EPA 300.0] [SM 4110 B] [EPA 300.1]	Nitrate
Certified	Yes	NJ	SDW02.06000	DW	Automated Cadmium Reduction	[EPA 353.2] [SM 4500-NO3 F]	Nitrite
Certified	Yes	NJ	SDW02.08000	DW	Ion Chromatography	[EPA 300.0] [SM 4110 B] [EPA 300.1]	Nitrite
Certified	Yes	NJ	SDW02.14000	DW	Ion Chromatography	[EPA 300.0] [SM 4110 B] [EPA 300.1]	Fluoride
Certified	Yes	NJ	SDW02.15000	DW	Spectrophotometric, Distill, Amenable	[SM 4500-CN C,G]	Cyanide
Certified	Yes	NJ	SDW02.15100	DW	Spectrophotometric, Distill, Manual	[SM 4500-CN C,E]	Cyanide
Certified	Yes	NJ	SDW02.15110	DW	UV, Distillation, Spectrophotometric	[OTHER Kelada-01]	Cyanide
Certified	Yes	NJ	SDW02.15200	DW	Spectrophotometric, Distill, Semi Automated	[EPA 335.4]	Cyanide
Certified	Yes	NJ	SDW02.19000	DW	Ion Chromatography	[EPA 300.0] [SM 4110 B]	Sulfate
Certified	Yes	NJ	SDW02.20000	DW	ICP	[EPA 200.7]	Sodium
Certified	Yes	NJ	SDW02.24000	DW	Gravimetric At 180	[SM 2540 C]	Total dissolved solids (TDS)
Certified	Yes	NJ	SDW02.27000	DW	ICP	[EPA 200.7]	Calcium
Certified	Yes	NJ	SDW02.27100	DW	Titrimetric, EDTA	[SM 3500-Ca D (18/19th ed)] [SM 3500-Ca B (20th ed)]	Calcium-hardness
Certified	Yes	NJ	SDW02.27200	DW	Ca as Carbonate	[EPA 200.7]	Calcium-hardness
Certified	Yes	NJ	SDW02.27300	DW	Hardness By Calculation	[EPA 200.7] [SM 3120B/3111B or 2340 B]	Total hardness
Certified	Yes	NJ	SDW02.27400	DW	Titrimetric, EDTA	[SM 2340 C]	Total hardness
Certified	Yes	NJ	SDW02.28000	DW	Titrimetric Indicator	[SM 2320 B]	Alkalinity
Certified	Yes	NJ	SDW02.29310	DW	Automated Phenate	[EPA 350.1] [SM 4500-NH3 G]	Ammonia
Certified	Yes	NJ	SDW02.29500	DW	Ion Chromatography	[EPA 300.0]	Bromide
Applied	No	NJ	SDW02.29600	DW	Ion Chromatography	[SM 4110 B]	Bromide
Certified	Yes	NJ	SDW02.31000	DW	Ion Chromatography	[EPA 300.0] [SM 4110] [EPA 300.1]	Chloride
Certified	Yes	NJ	SDW02.31100	DW	Ion Chromatography	[EPA 300.0]	Chlorate
Certified	Yes	NJ	SDW02.31120	DW	Ion Chromatography	[EPA 314.0]	Perchlorate
Certified	Yes	NJ	SDW02.31200	DW	Ion Chromatogmphy	[EPA 300.0] [EPA 300.1]	Chlorite (monthly)
Certified	Yes	NJ	SDW02.32000	DW	Platinum-Cobalt	[SM 2120 B]	Color
Certified	Yes	NJ	SDW02.33000	DW	Methylene Blue	[SM 5540 C]	Foaming agents
Certified	Yes	NJ	SDW02.34000	DW	Consistent Series	[SM 2150 B]	Odor
Certified	Yes	NJ	SDW02.35000	DW	Conductance	[SM 2510 B]	Conductivity
Certified	Yes	NJ	SDW02.37000	DW	Colorimetric	[SM 4500-P E]	Orthophosphate

KEY: AE = Air and Emissions, BT = Biological Tissues, DW = Drinking Water, NPW = Non-Potable Water, SCM = Solid and Chemical Materials

New Jersey Department of Environmental Protection

National Environmental Laboratory Accreditation Program

ANNUAL CERTIFIED PARAMETER LIST AND CURRENT STATUS

Effective as of 07/01/2011 until 06/30/2012

Laboratory Name: ENVIRONMENTAL SCIENCE CORPORATION Laboratory Number: TN002 Activity ID: NLC110001
12065 LEBANON RD
MT. JULIET, TN 37122

Category: SDW02 -- Inorganic Parameters Including Na + Ca

Status	Eligible to Report NJ Data	State	Code	Matrix	Technique Description	Approved Method	Parameter Description
Applied	No	NJ	SDW02.39510	DW	Persulfate-UV, Filtration	[SM 5310C]	Dissolved organic carbon (DOC)
Applied	No	NJ	SDW02.39600	DW	High Temp. Combustion	[SM 5310 B]	Total organic carbon (TOC)
Certified	Yes	NJ	SDW02.39610	DW	Persulfate-UV	[SM 5310 C]	Total organic carbon (TOC)
Certified	Yes	NJ	SDW02.40000	DW	Pyrolysis, Titrimetric	[SM 5320 B]	Total organic halides (TOX)
Certified	Yes	NJ	SDW02.50000	DW	Spectrophotometric, Calculation	[SM 5910B]	UV-absorbing compounds

Category: SDW03 -- Analyze-Immediately Inorganic Parameter

Status	Eligible to Report NJ Data	State	Code	Matrix	Technique Description	Approved Method	Parameter Description
Certified	Yes	NJ	SDW03.03000	DW	DPD, Colorimetric	[SM 4500-Cl G]	Chlorine - residual
Certified	Yes	NJ	SDW03.08000	DW	Electrometric	[SM 4500-H B] [EPA 150.1]	pH

Category: SDW04 -- Inorganic Parameters, Metals

Status	Eligible to Report NJ Data	State	Code	Matrix	Technique Description	Approved Method	Parameter Description
Certified	Yes	NJ	SDW04.03000	DW	ICP	[EPA 200.7]	Aluminum
Certified	Yes	NJ	SDW04.07000	DW	ICP/MS	[EPA 200.8]	Antimony
Certified	Yes	NJ	SDW04.12000	DW	ICP/MS	[EPA 200.8]	Arsenic
Certified	Yes	NJ	SDW04.16000	DW	ICP	[EPA 200.7]	Barium
Certified	Yes	NJ	SDW04.17000	DW	ICP/MS	[EPA 200.8]	Barium
Certified	Yes	NJ	SDW04.20000	DW	ICP	[EPA 200.7]	Beryllium
Certified	Yes	NJ	SDW04.21000	DW	ICP/MS	[EPA 200.8]	Beryllium
Certified	Yes	NJ	SDW04.24000	DW	ICP	[EPA 200.7]	Cadmium
Certified	Yes	NJ	SDW04.25000	DW	ICP/MS	[EPA 200.8]	Cadmium
Certified	Yes	NJ	SDW04.28000	DW	ICP	[EPA 200.7]	Chromium
Certified	Yes	NJ	SDW04.29000	DW	ICP/MS	[EPA 200.8]	Chromium
Certified	Yes	NJ	SDW04.33000	DW	ICP	[EPA 200.7]	Copper
Certified	Yes	NJ	SDW04.34000	DW	ICP/MS	[EPA 200.8]	Copper
Certified	Yes	NJ	SDW04.37000	DW	ICP	[EPA 200.7]	Iron

KEY: AE = Air and Emissions, BT = Biological Tissues, DW = Drinking Water, NPW = Non-Potable Water, SCM = Solid and Chemical Materials

New Jersey Department of Environmental Protection

National Environmental Laboratory Accreditation Program

ANNUAL CERTIFIED PARAMETER LIST AND CURRENT STATUS

Effective as of 07/01/2011 until 06/30/2012

Laboratory Name: ENVIRONMENTAL SCIENCE CORPORATION Laboratory Number: TN002 Activity ID: NLC110001
12065 LEBANON RD
MT. JULIET, TN 37122

Category: SDW04 – Inorganic Parameters, Metals

Status	Eligible to Report NJ Data	State	Code	Matrix	Technique Description	Approved Method	Parameter Description
Certified	Yes	NJ	SDW04.40000	DW	ICP/MS	[EPA 200.8]	Lead
Certified	Yes	NJ	SDW04.41100	DW	ICP	[EPA 200.7]	Magnesium
Certified	Yes	NJ	SDW04.44000	DW	ICP	[EPA 200.7]	Manganese
Certified	Yes	NJ	SDW04.45000	DW	ICP/MS	[EPA 200.8]	Manganese
Certified	Yes	NJ	SDW04.46000	DW	Manual Cold Vapor	[EPA 245.1]	Mercury
Certified	Yes	NJ	SDW04.52000	DW	ICP	[EPA 200.7]	Nickel
Certified	Yes	NJ	SDW04.53000	DW	ICP/MS	[EPA 200.8]	Nickel
Certified	Yes	NJ	SDW04.57000	DW	ICP/MS	[EPA 200.8]	Selenium
Certified	Yes	NJ	SDW04.62000	DW	ICP	[EPA 200.7]	Silver
Certified	Yes	NJ	SDW04.63000	DW	ICP/MS	[EPA 200.8]	Silver
Certified	Yes	NJ	SDW04.65000	DW	ICP/MS	[EPA 200.8]	Thallium
Certified	Yes	NJ	SDW04.67000	DW	ICP	[EPA 200.7]	Zinc
Certified	Yes	NJ	SDW04.68000	DW	ICP/MS	[EPA 200.8]	Zinc

Category: SDW05 -- Organic Parameters, Chromatography

Status	Eligible to Report NJ Data	State	Code	Matrix	Technique Description	Approved Method	Parameter Description
Certified	Yes	NJ	SDW05.04010	DW	GC with Nitrogen/Phosphorous Detector	[EPA 507]	Alachlor
Certified	Yes	NJ	SDW05.04020	DW	GC with Nitrogen/Phosphorous Detector	[EPA 507]	Atrazine
Certified	Yes	NJ	SDW05.04030	DW	GC with Nitrogen/Phosphorous Detector	[EPA 507]	Simazine
Certified	Yes	NJ	SDW05.04110	DW	GC with Nitrogen/Phosphorous Detector	[EPA 507]	Butachlor
Certified	Yes	NJ	SDW05.04140	DW	GC with Nitrogen/Phosphorous Detector	[EPA 507]	Metolachlor
Certified	Yes	NJ	SDW05.04150	DW	GC with Nitrogen/Phosphorous Detector	[EPA 507]	Metribuzin
Certified	Yes	NJ	SDW05.12010	DW	Solvent Extract, GC	[EPA 504.1]	Dibromoethane (1,2-) (EDB)
Certified	Yes	NJ	SDW05.12020	DW	Solvent Extract, GC	[EPA 504.1]	Dibromo-3-chloropropane (1,2-)
Certified	Yes	NJ	SDW05.12030	DW	Solvent Extract, GC	[EPA 504.1]	Trichloropropane (1,2,3-)
Certified	Yes	NJ	SDW05.14010	DW	Liquid/Liquid Extraction/GC	[EPA 515.1]	D (2,4-)
Certified	Yes	NJ	SDW05.14020	DW	Liquid/Liquid Extraction/GC	[EPA 515.1]	Dalapon
Certified	Yes	NJ	SDW05.14030	DW	Liquid/Liquid Extraction/GC	[EPA 515.1]	Dinoseb
Certified	Yes	NJ	SDW05.14060	DW	Liquid/Liquid Extraction/GC	[EPA 515.1]	TP (2,4,5-) (Silvex)

KEY: AE = Air and Emissions, BT = Biological Tissues, DW = Drinking Water, NPW = Non-Potable Water, SCM = Solid and Chemical Materials

New Jersey Department of Environmental Protection

National Environmental Laboratory Accreditation Program

ANNUAL CERTIFIED PARAMETER LIST AND CURRENT STATUS

Effective as of 07/01/2011 until 06/30/2012

Laboratory Name: ENVIRONMENTAL SCIENCE CORPORATION Laboratory Number: TN002 Activity ID: NLC110001
12065 LEBANON RD
MT. JULIET, TN 37122

Category: SDW05 – Organic Parameters, Chromatography

Status	Eligible to Report NJ Data	State	Code	Matrix	Technique Description	Approved Method	Parameter Description
Certified	Yes	NJ	SDW05.15020	DW	Liquid/Liquid Extraction/GC	[EPA 515.1]	DB (2,4-)
Certified	Yes	NJ	SDW05.15030	DW	Liquid/Liquid Extraction/GC	[EPA 515.1]	Dicamba
Certified	Yes	NJ	SDW05.15050	DW	Liquid/Liquid Extraction/GC	[EPA 515.1]	Dichlorprop
Certified	Yes	NJ	SDW05.15070	DW	Liquid/Liquid Extraction/GC	[EPA 515.1]	T (2,4,5-)
Certified	Yes	NJ	SDW05.22010	DW	Liquid/Liquid Extraction/GC	[EPA 552.2]	Bromochloroacetic acid
Certified	Yes	NJ	SDW05.22050	DW	Liquid/Liquid Extraction/GC	[EPA 552.2]	Dibromoacetic acid
Certified	Yes	NJ	SDW05.22060	DW	Liquid/Liquid Extraction/GC	[EPA 552.2]	Dichloroacetic acid
Certified	Yes	NJ	SDW05.22070	DW	Liquid/Liquid Extraction/GC	[EPA 552.2]	Monobromoacetic acid (MBAA)
Certified	Yes	NJ	SDW05.22080	DW	Liquid/Liquid Extraction/GC	[EPA 552.2]	Monochloroacetic acid (MCAA)
Certified	Yes	NJ	SDW05.22100	DW	Liquid/Liquid Extraction/GC	[EPA 552.2]	Trichloroacetic acid
Certified	Yes	NJ	SDW05.30010	DW	GC, Extraction, ECD or HECD, Capillary	[EPA 508]	Endrin
Certified	Yes	NJ	SDW05.30020	DW	GC, Extraction, ECD or HECD, Capillary	[EPA 508]	Heptachlor
Certified	Yes	NJ	SDW05.30030	DW	GC, Extraction, ECD or HECD, Capillary	[EPA 508]	Heptachlor epoxide
Certified	Yes	NJ	SDW05.30040	DW	GC, Extraction, ECD or HECD, Capillary	[EPA 508]	Hexachlorobenzene
Applied	No	NJ	SDW05.30050	DW	GC, Extraction, ECD or HECD, Capillary	[EPA 508]	Hexachlorocyclopentadiene
Certified	Yes	NJ	SDW05.30060	DW	GC, Extraction, ECD or HECD, Capillary	[EPA 508]	Lindane (gamma BHC)
Certified	Yes	NJ	SDW05.30070	DW	GC, Extraction, ECD or HECD, Capillary	[EPA 508]	Methoxychlor
Certified	Yes	NJ	SDW05.30080	DW	GC, Extraction, ECD or HECD, Capillary	[EPA 508]	Chlordane (technical)
Applied	No	NJ	SDW05.30090	DW	GC, Extraction, ECD or HECD, Capillary	[EPA 508]	Chlordane (alpha)
Applied	No	NJ	SDW05.30100	DW	GC, Extraction, ECD or HECD, Capillary	[EPA 508]	Chlordane (gamma)
Certified	Yes	NJ	SDW05.30110	DW	GC, Extraction, ECD or HECD, Capillary	[EPA 508]	Toxaphene
Certified	Yes	NJ	SDW05.30210	DW	GC, Extraction, ECD or HECD, Capillary	[EPA 508]	Aldrin
Certified	Yes	NJ	SDW05.30220	DW	GC, Extraction, ECD or HECD, Capillary	[EPA 508]	Alpha BHC
Certified	Yes	NJ	SDW05.30230	DW	GC, Extraction, ECD or HECD, Capillary	[EPA 508]	Beta BHC
Certified	Yes	NJ	SDW05.30240	DW	GC, Extraction, ECD or HECD, Capillary	[EPA 508]	Delta BHC
Certified	Yes	NJ	SDW05.30250	DW	GC, Extraction, ECD or HECD, Capillary	[EPA 508]	DDD (4,4'-)
Certified	Yes	NJ	SDW05.30260	DW	GC, Extraction, ECD or HECD, Capillary	[EPA 508]	DDE (4,4'-)
Certified	Yes	NJ	SDW05.30270	DW	GC, Extraction, ECD or HECD, Capillary	[EPA 508]	DDT (4,4'-)
Certified	Yes	NJ	SDW05.30280	DW	GC, Extraction, ECD or HECD, Capillary	[EPA 508]	Dieldrin
Certified	Yes	NJ	SDW05.30290	DW	GC, Extraction, ECD or HECD, Capillary	[EPA 508]	Endosulfan I
Certified	Yes	NJ	SDW05.30300	DW	GC, Extraction, ECD or HECD, Capillary	[EPA 508]	Endosulfan II
Certified	Yes	NJ	SDW05.30310	DW	GC, Extraction, ECD or HECD, Capillary	[EPA 508]	Endosulfan sulfate

KEY: AE = Air and Emissions, BT = Biological Tissues, DW = Drinking Water, NPW = Non-Potable Water, SCM = Solid and Chemical Materials

ANNUAL CERTIFIED PARAMETER LIST AND CURRENT STATUS

Effective as of 07/01/2011 until 06/30/2012

Laboratory Name: ENVIRONMENTAL SCIENCE CORPORATION Laboratory Number: TN002 Activity ID: NLC110001
12065 LEBANON RD
MT. JULIET, TN 37122

Category: SDW05 -- Organic Parameters, Chromatography

Status	Eligible to Report NJ Data	State	Code	Matrix	Technique Description	Approved Method	Parameter Description
Certified	Yes	NJ	SDW05.30320	DW	GC, Extraction, ECD or HECD, Capillary	[EPA 508]	Endrin aldehyde
Certified	Yes	NJ	SDW05.30330	DW	GC, Extraction, ECD or HECD, Capillary	[EPA 508]	Endrin ketone

Category: SDW06 -- Organic Parameters, Chromatography/MS

Status	Eligible to Report NJ Data	State	Code	Matrix	Technique Description	Approved Method	Parameter Description
Certified	Yes	NJ	SDW06.01010	DW	GC/MS, P & T or Direct Injection, Capillary	[EPA 524.2]	Bromoform
Certified	Yes	NJ	SDW06.01020	DW	GC/MS, P & T or Direct Injection, Capillary	[EPA 524.2]	Chloroform
Certified	Yes	NJ	SDW06.01030	DW	GC/MS, P & T or Direct Injection, Capillary	[EPA 524.2]	Dibromochloromethane
Certified	Yes	NJ	SDW06.01040	DW	GC/MS, P & T or Direct Injection, Capillary	[EPA 524.2]	Bromodichloromethane
Certified	Yes	NJ	SDW06.02010	DW	GC/MS, P & T or Direct Injection, Capillary	[EPA 524.2]	Benzene
Certified	Yes	NJ	SDW06.02020	DW	GC/MS, P & T or Direct Injection, Capillary	[EPA 524.2]	Carbon tetrachloride
Certified	Yes	NJ	SDW06.02030	DW	GC/MS, P & T or Direct Injection, Capillary	[EPA 524.2]	Chlorobenzene
Certified	Yes	NJ	SDW06.02040	DW	GC/MS, P & T or Direct Injection, Capillary	[EPA 524.2]	Dichlorobenzene (1,2-)
Certified	Yes	NJ	SDW06.02050	DW	GC/MS, P & T or Direct Injection, Capillary	[EPA 524.2]	Dichlorobenzene (1,3-)
Certified	Yes	NJ	SDW06.02060	DW	GC/MS, P & T or Direct Injection, Capillary	[EPA 524.2]	Dichlorobenzene (1,4-)
Certified	Yes	NJ	SDW06.02070	DW	GC/MS, P & T or Direct Injection, Capillary	[EPA 524.2]	Dichloroethane (1,1-)
Certified	Yes	NJ	SDW06.02080	DW	GC/MS, P & T or Direct Injection, Capillary	[EPA 524.2]	Dichloroethane (1,2-)
Certified	Yes	NJ	SDW06.02090	DW	GC/MS, P & T or Direct Injection, Capillary	[EPA 524.2]	Dichloroethene (cis-1,2-)
Certified	Yes	NJ	SDW06.02100	DW	GC/MS, P & T or Direct Injection, Capillary	[EPA 524.2]	Dichloroethene (trans-1,2-)
Certified	Yes	NJ	SDW06.02110	DW	GC/MS, P & T or Direct Injection, Capillary	[EPA 524.2]	Methylene chloride (Dichloromethane)
Certified	Yes	NJ	SDW06.02120	DW	GC/MS, P & T or Direct Injection, Capillary	[EPA 524.2]	Dichloropropane (1,2-)
Certified	Yes	NJ	SDW06.02130	DW	GC/MS, P & T or Direct Injection, Capillary	[EPA 524.2]	Ethylbenzene
Certified	Yes	NJ	SDW06.02140	DW	GC/MS, P & T or Direct Injection, Capillary	[EPA 524.2]	Methyl tert-butyl ether
Certified	Yes	NJ	SDW06.02150	DW	GC/MS, P & T or Direct Injection, Capillary	[EPA 524.2]	Naphthalene
Certified	Yes	NJ	SDW06.02160	DW	GC/MS, P & T or Direct Injection, Capillary	[EPA 524.2]	Styrene
Certified	Yes	NJ	SDW06.02170	DW	GC/MS, P & T or Direct Injection, Capillary	[EPA 524.2]	Tetrachloroethane (1,1,2,2-)
Certified	Yes	NJ	SDW06.02180	DW	GC/MS, P & T or Direct Injection, Capillary	[EPA 524.2]	Tetrachloroethene
Certified	Yes	NJ	SDW06.02190	DW	GC/MS, P & T or Direct Injection, Capillary	[EPA 524.2]	Trichloromethane (1,1,1-)
Certified	Yes	NJ	SDW06.02200	DW	GC/MS, P & T or Direct Injection, Capillary	[EPA 524.2]	Trichloroethene

KEY: AE = Air and Emissions, BT = Biological Tissues, DW = Drinking Water, NPW = Non-Potable Water, SCM = Solid and Chemical Materials

New Jersey Department of Environmental Protection

National Environmental Laboratory Accreditation Program

ANNUAL CERTIFIED PARAMETER LIST AND CURRENT STATUS

Effective as of 07/01/2011 until 06/30/2012

Laboratory Name: ENVIRONMENTAL SCIENCE CORPORATION Laboratory Number: TN002 Activity ID: NLC110001
12065 LEBANON RD
MT. JULIET, TN 37122

Category: SDW06 – Organic Parameters, Chromatography/MS

Status	Eligible to Report NJ Data	State	Code	Matrix	Technique Description	Approved Method	Parameter Description
Certified	Yes	NJ	SDW06.02210	DW	GC/MS, P & T or Direct Injection, Capillary	[EPA 524.2]	Toluene
Certified	Yes	NJ	SDW06.02220	DW	GC/MS, P & T or Direct Injection, Capillary	[EPA 524.2]	Trichlorobenzene (1,2,4-)
Certified	Yes	NJ	SDW06.02230	DW	GC/MS, P & T or Direct Injection, Capillary	[EPA 524.2]	Dichloroethene (1,1-)
Certified	Yes	NJ	SDW06.02240	DW	GC/MS, P & T or Direct Injection, Capillary	[EPA 524.2]	Trichloroethane (1,1,2-)
Certified	Yes	NJ	SDW06.02250	DW	GC/MS, P & T or Direct Injection, Capillary	[EPA 524.2]	Vinyl chloride
Certified	Yes	NJ	SDW06.02260	DW	GC/MS, P & T or Direct Injection, Capillary	[EPA 524.2]	Xylenes (total)
Certified	Yes	NJ	SDW06.03010	DW	GC/MS, P & T or Direct Injection, Capillary	[EPA 524.2]	Bromobenzene
Certified	Yes	NJ	SDW06.03020	DW	GC/MS, P & T or Direct Injection, Capillary	[EPA 524.2]	Bromochloromethane
Certified	Yes	NJ	SDW06.03030	DW	GC/MS, P & T or Direct Injection, Capillary	[EPA 524.2]	Bromomethane
Certified	Yes	NJ	SDW06.03040	DW	GC/MS, P & T or Direct Injection, Capillary	[EPA 524.2]	Butyl benzene (n-)
Certified	Yes	NJ	SDW06.03050	DW	GC/MS, P & T or Direct Injection, Capillary	[EPA 524.2]	Sec-butylbenzene
Certified	Yes	NJ	SDW06.03060	DW	GC/MS, P & T or Direct Injection, Capillary	[EPA 524.2]	Tert-butylbenzene
Certified	Yes	NJ	SDW06.03070	DW	GC/MS, P & T or Direct Injection, Capillary	[EPA 524.2]	Chloroethane
Certified	Yes	NJ	SDW06.03080	DW	GC/MS, P & T or Direct Injection, Capillary	[EPA 524.2]	Chloromethane
Certified	Yes	NJ	SDW06.03090	DW	GC/MS, P & T or Direct Injection, Capillary	[EPA 524.2]	Chlorotoluene (2-)
Certified	Yes	NJ	SDW06.03100	DW	GC/MS, P & T or Direct Injection, Capillary	[EPA 524.2]	Chlorotoluene (4-)
Certified	Yes	NJ	SDW06.03110	DW	GC/MS, P & T or Direct Injection, Capillary	[EPA 524.2]	Dibromo-3-chloropropane (1,2-)
Certified	Yes	NJ	SDW06.03120	DW	GC/MS, P & T or Direct Injection, Capillary	[EPA 524.2]	Dibromoethane (1,2-) (EDB)
Certified	Yes	NJ	SDW06.03130	DW	GC/MS, P & T or Direct Injection, Capillary	[EPA 524.2]	Dibromomethane
Certified	Yes	NJ	SDW06.03140	DW	GC/MS, P & T or Direct Injection, Capillary	[EPA 524.2]	Dichlorodifluoromethane
Certified	Yes	NJ	SDW06.03150	DW	GC/MS, P & T or Direct Injection, Capillary	[EPA 524.2]	Dichloropropane (1,3-)
Certified	Yes	NJ	SDW06.03160	DW	GC/MS, P & T or Direct Injection, Capillary	[EPA 524.2]	Dichloropropane (2,2-)
Certified	Yes	NJ	SDW06.03170	DW	GC/MS, P & T or Direct Injection, Capillary	[EPA 524.2]	Dichloropropene (1,1-)
Certified	Yes	NJ	SDW06.03180	DW	GC/MS, P & T or Direct Injection, Capillary	[EPA 524.2]	Dichloropropene (cis-1,3-)
Certified	Yes	NJ	SDW06.03190	DW	GC/MS, P & T or Direct Injection, Capillary	[EPA 524.2]	Dichloropropene (trans-1,3-)
Certified	Yes	NJ	SDW06.03200	DW	GC/MS, P & T or Direct Injection, Capillary	[EPA 524.2]	Hexachlorobutadiene (1,3-)
Certified	Yes	NJ	SDW06.03210	DW	GC/MS, P & T or Direct Injection, Capillary	[EPA 524.2]	Isopropylbenzene
Certified	Yes	NJ	SDW06.03220	DW	GC/MS, P & T or Direct Injection, Capillary	[EPA 524.2]	Isopropyltoluene (4-)
Certified	Yes	NJ	SDW06.03230	DW	GC/MS, P & T or Direct Injection, Capillary	[EPA 524.2]	Propylbenzene (n-)
Certified	Yes	NJ	SDW06.03240	DW	GC/MS, P & T or Direct Injection, Capillary	[EPA 524.2]	Tetrachloroethane (1,1,1,2-)
Certified	Yes	NJ	SDW06.03250	DW	GC/MS, P & T or Direct Injection, Capillary	[EPA 524.2]	Trichlorobenzene (1,2,3-)
Certified	Yes	NJ	SDW06.03251	DW	GC/MS, P & T or Direct Injection, Capillary	[EPA 524.2]	Trichlorobenzene (1,3,5-)

KEY: AE = Air and Emissions, BT = Biological Tissues, DW = Drinking Water, NPW = Non-Potable Water, SCM = Solid and Chemical Materials

Laboratory Name: ENVIRONMENTAL SCIENCE CORPORATION Laboratory Number: TN002 Activity ID: NLC110001
12065 LEBANON RD
MT. JULIET, TN 37122

Category: SDW06 -- Organic Parameters, Chromatography/MS

Status	Eligible to Report NJ Data	State	Code	Matrix	Technique Description	Approved Method	Parameter Description
Certified	Yes	NJ	SDW06.03260	DW	GC/MS, P & T or Direct Injection, Capillary	[EPA 524.2]	Trichlorofluoromethane
Certified	Yes	NJ	SDW06.03270	DW	GC/MS, P & T or Direct Injection, Capillary	[EPA 524.2]	Trichloropropane (1,2,3-)
Certified	Yes	NJ	SDW06.03280	DW	GC/MS, P & T or Direct Injection, Capillary	[EPA 524.2]	Trimethylbenzene (1,2,4-)
Certified	Yes	NJ	SDW06.03300	DW	GC/MS, P & T or Direct Injection, Capillary	[EPA 524.2]	Trimethylbenzene (1,3,5-)
Certified	Yes	NJ	SDW06.03410	DW	GC/MS, P & T or Direct Injection, Capillary	[EPA 524.2]	Acetone
Certified	Yes	NJ	SDW06.03440	DW	GC/MS, P & T or Direct Injection, Capillary	[EPA 524.2]	Butanone (2-)
Certified	Yes	NJ	SDW06.03450	DW	GC/MS, P & T or Direct Injection, Capillary	[EPA 524.2]	Carbon disulfide
Certified	Yes	NJ	SDW06.03480	DW	GC/MS, P & T or Direct Injection, Capillary	[EPA 524.2]	Dichloro-2-butene (trans-1,4-)
Applied	No	NJ	SDW06.03505	DW	GC/MS, P & T or Direct Injection, Capillary	[USER DEFINED 524.2]	Diisopropyl Ether [DIPE]
Certified	Yes	NJ	SDW06.03520	DW	GC/MS, P & T or Direct Injection, Capillary	[EPA 524.2]	Hexachloroethane
Certified	Yes	NJ	SDW06.03530	DW	GC/MS, P & T or Direct Injection, Capillary	[EPA 524.2]	Hexanone (2-)
Certified	Yes	NJ	SDW06.03560	DW	GC/MS, P & T or Direct Injection, Capillary	[EPA 524.2]	Methyl iodide
Certified	Yes	NJ	SDW06.03580	DW	GC/MS, P & T or Direct Injection, Capillary	[EPA 524.2]	Pentanone (4-methyl-2-) (MIBK)
Applied	No	NJ	SDW06.03620	DW	GC/MS, P & T or Direct Injection, Capillary	[EPA 524.2]	Tetrahydrofuran

Category: SHW04 -- Inorganic Parameters

Status	Eligible to Report NJ Data	State	Code	Matrix	Technique Description	Approved Method	Parameter Description
Certified	Yes	NJ	SHW04.01000	NPW	Acid Digestion/Surface and Groundwater, ICP, FLAA	[SW-846 3005A]	Metals, Total Rec and Dissolved
Certified	Yes	NJ	SHW04.01500	NPW	Acid Digestion/Aqueous Samples, ICP, FLAA	[SW-846 3010A]	Metals, Total
Certified	Yes	NJ	SHW04.02000	NPW	Acid Digestion For GFAA, Aqueous	[SW-846 3020A]	Metals
Certified	Yes	NJ	SHW04.02100	NPW	Acid Digestion For GFAA, Micro asst Aqueous	[SW-846 3015A] [SW-846 3015]	Metals
Certified	Yes	NJ	SHW04.22100	NPW	Ion Chromatography	[SW-846 7199]	Chromium (VI)

Category: SHW05 -- Organic Parameters, Prep. / Screening

Status	Eligible to Report NJ Data	State	Code	Matrix	Technique Description	Approved Method	Parameter Description
Certified	Yes	NJ	SHW05.01000	NPW	Separatory Funnel Extraction	[SW-846 3510C]	Semivolatile organics
Certified	Yes	NJ	SHW05.01050	NPW	Microscale Solvent Extraction - Aqueous	[SW-846 3511]	Semivolatile organics

KEY: AE = Air and Emissions, BT = Biological Tissues, DW = Drinking Water, NPW = Non Potable Water, SCM = Solid and Chemical Materials

New Jersey Department of Environmental Protection

National Environmental Laboratory Accreditation Program

ANNUAL CERTIFIED PARAMETER LIST AND CURRENT STATUS

Effective as of 07/01/2011 until 06/30/2012

Laboratory Name: ENVIRONMENTAL SCIENCE CORPORATION Laboratory Number: TN002 Activity ID: NLC110001
12065 LEBANON RD
MT. JULIET, TN 37122

Category: SHW05 -- Organic Parameters, Prep. / Screening

Status	Eligible to Report NJ Data	State	Code	Matrix	Technique Description	Approved Method	Parameter Description
Certified	Yes	NJ	SHW05.02000	NPW	Continuous Liquid-Liquid Extraction	[SW-846 3520C]	Semivolatile organics
Certified	Yes	NJ	SHW05.07000	NPW	Purge & Trap Aqueous	[USER DEFINED 5030C] [SW-846 5030B]	Volatile organics

Category: SHW06 -- Organic Parameters, Chromatography

Status	Eligible to Report NJ Data	State	Code	Matrix	Technique Description	Approved Method	Parameter Description
Certified	Yes	NJ	SHW06.23100	NPW	GC, Headspace, FID	[OTHER J. Chrom. Sci. RSK-175]	Ethane
Certified	Yes	NJ	SHW06.23105	NPW	GC, Headspace, FID	[OTHER J. Chrom. Sci. RSK-175]	Ethene
Certified	Yes	NJ	SHW06.23110	NPW	GC, Headspace, FID	[OTHER J. Chrom. Sci. RSK-175]	Methane

Category: SHW09 -- Miscellaneous Parameters

Status	Eligible to Report NJ Data	State	Code	Matrix	Technique Description	Approved Method	Parameter Description
Certified	Yes	NJ	SHW09.06000	NPW	Combustion, Titration	[SW-846 9020B]	Total organic halides (TOX)
Certified	Yes	NJ	SHW09.17000	NPW	Wheatstone Bridge	[SW-846 9050A]	Specific conductance
Certified	Yes	NJ	SHW09.22000	NPW	Colorimetric, Auto, 4AAP Distillation	[SW-846 9066]	Phenols

Category: SHW10 -- Facility-Specific Parameters

Status	Eligible to Report NJ Data	State	Code	Matrix	Technique Description	Approved Method	Parameter Description
Certified	Yes	NJ	SHW10.30015	NPW	Colorimetric, Cadmium Reduction, Automated	[USER DEFINED EPA 353.2 Modified]	Nitrocellulose

Category: WPP01 -- Microbiological Parameters

Status	Eligible to Report NJ Data	State	Code	Matrix	Technique Description	Approved Method	Parameter Description
Certified	Yes	NJ	WPP01.02000	NPW	Membrane Filter (MF), Single Step	[SM 9222 D]	Fecal coliform
Certified	Yes	NJ	WPP01.04000	NPW	MF Single Step or Two Step	[SM 9222 B]	Total coliform

KEY AE = Air and Emissions, BT = Biological Tissues, DW = Drinking Water, NPW = Non-Potable Water, SCM = Solid and Chemical Materials

New Jersey Department of Environmental Protection

National Environmental Laboratory Accreditation Program

ANNUAL CERTIFIED PARAMETER LIST AND CURRENT STATUS

Effective as of 07/01/2011 until 06/30/2012

Laboratory Name: ENVIRONMENTAL SCIENCE CORPORATION Laboratory Number: TN002 Activity ID: NLC110001
12065 LEBANON RD
MT. JULIET, TN 37122

Category: WPP01 -- Microbiological Parameters

Status	Eligible to Report NJ Data	State	Code	Matrix	Technique Description	Approved Method	Parameter Description
Applied	No	NJ	WPP01.09020	NPW	Multiple Tube/Mutiple Well - Enterolert	[ASTM D6503]	Enterococci
Certified	Yes	NJ	WPP01.10000	NPW	Pour Plate	[SM 9215 B]	Heterotrophic plate count

Category: WPP02 -- Inorg. Parameters, Nutrients and Demands

Status	Eligible to Report NJ Data	State	Code	Matrix	Technique Description	Approved Method	Parameter Description
Certified	Yes	NJ	WPP02.01000	NPW	Electrometric or Phenolphthalein	[ASTM D1067] [SM 2310 B(4A)]	Acidity as CaCO3
Certified	Yes	NJ	WPP02.01500	NPW	Electrometric or Color Titration	[SM 2320 B]	Alkalinity as CaCO3
Certified	Yes	NJ	WPP02.02000	NPW	Automated Titration	[EPA 310.2]	Alkalinity as CaCO3
Certified	Yes	NJ	WPP02.04000	NPW	Automated Phenate	[EPA 350.1] [SM 4500-NH3 B+G (19/20th ed.)]	Ammonia
Certified	Yes	NJ	WPP02.05000	NPW	Dissolved Oxygen Depletion	[SM 5210 B]	Biochemical oxygen demand
Certified	Yes	NJ	WPP02.06000	NPW	ICP	[EPA 200.7]	Boron
Certified	Yes	NJ	WPP02.07100	NPW	Ion Chromatography	[EPA 300.0] [EPA 300.1]	Bromide
Certified	Yes	NJ	WPP02.08000	NPW	Digestion, ICP	[EPA 200.7]	Calcium
Certified	Yes	NJ	WPP02.09500	NPW	Dissolved Oxygen Depletion, Nitrification Inhibition	[SM 5210 B]	Carbonaceous BOD (CBOD)
Certified	Yes	NJ	WPP02.10500	NPW	Spectrophotometric Manual/Auto	[EPA 410.4] [SM 5220 D]	Chemical oxygen demand
Certified	Yes	NJ	WPP02.12600	NPW	Ion Chromatography	[EPA 300.0] [SM 4110 B] [EPA 300.1]	Chloride
Certified	Yes	NJ	WPP02.13500	NPW	Colorimetric (Platinum-Cobalt)	[SM 2120 B]	Color
Certified	Yes	NJ	WPP02.15000	NPW	Distillation, Spectrophotometric (Manual)	[SM 4500-CN C, E]	Cyanide
Certified	Yes	NJ	WPP02.15010	NPW	Auto distillation and colorimetry	[OTHER Kelada-01]	Cyanide
Certified	Yes	NJ	WPP02.15500	NPW	Distillation, Spectrophotometric (Auto)	[EPA 335.4]	Cyanide
Certified	Yes	NJ	WPP02.16000	NPW	Manual Distillation, Titrimetr/Spectro	[SM 4500-CN C,G]	Cyanide - amenable to Cl2
Certified	Yes	NJ	WPP02.16010	NPW	Auto distillation and colorimetry	[OTHER Kelada-01]	Cyanide - amenable to Cl2
Certified	Yes	NJ	WPP02.18100	NPW	Ion Chromatography	[EPA 300.0] [SM 4110 B] [EPA 300.1]	Fluoride
Certified	Yes	NJ	WPP02.18500	NPW	Automated Colorimetric	[EPA 130.1]	Hardness - total as CaCO3
Certified	Yes	NJ	WPP02.19000	NPW	Titrimetric, EDTA	[SM 2340 B or C]	Hardness - total as CaCO3
Certified	Yes	NJ	WPP02.20100	NPW	Ca + Mg Carbonates, ICP	[EPA 200.7]	Hardness - total as CaCO3
Certified	Yes	NJ	WPP02.20500	NPW	Digestion, Distillation, Titration	[SM 4500-N Org B or C + NH3 B + NH3 C (19/20th ed)]	Kjeldahl nitrogen - total
Certified	Yes	NJ	WPP02.22500	NPW	Digestion, Distillation, Semiautomated Digestor	[EPA 351.2]	Kjeldahl nitrogen - total

KEY: AE = Air and Emissions, BT = Biological Tissues, DW = Drinking Water, NPW = Non-Potable Water, SCM = Solid and Chemical Materials

New Jersey Department of Environmental Protection

National Environmental Laboratory Accreditation Program

ANNUAL CERTIFIED PARAMETER LIST AND CURRENT STATUS

Effective as of 07/01/2011 until 06/30/2012

Laboratory Name: ENVIRONMENTAL SCIENCE CORPORATION Laboratory Number: TN002 Activity ID: NLC110001
12065 LEBANON RD
MT. JULIET, TN 37122

Category: WPP02 -- Inorg. Parameters, Nutrients and Demands

Status	Eligible to Report NJ Data	State	Code	Matrix	Technique Description	Approved Method	Parameter Description
Certified	Yes	NJ	WPP02.24000	NPW	Digestion, ICP	[EPA 200.7]	Magnesium
Certified	Yes	NJ	WPP02.26100	NPW	Ion Chromatography	[EPA 300.0] [SM 4110 B] [EPA 300.1]	Nitrate
Certified	Yes	NJ	WPP02.27000	NPW	Cadmium Reduction, Automated	[EPA 353.2] [SM 4500-NO3 F]	Nitrate - nitrite
Certified	Yes	NJ	WPP02.27010	NPW	Ion Chromatography	[EPA 300.0] [SM 4110 B] [EPA 300.1]	Nitrate - nitrite
Certified	Yes	NJ	WPP02.28600	NPW	Ion Chromatography	[EPA 300.0] [SM 4110 B] [EPA 300.1]	Nitrite
Certified	Yes	NJ	WPP02.29000	NPW	Gravimetric	[SM 5520 B]	Oil & grease - total recov
Certified	Yes	NJ	WPP02.29100	NPW	Gravimetric, Hexane Extractable Material-LL	[EPA 1664A] [SM 5520 B]	Oil & grease - hem-LL
Certified	Yes	NJ	WPP02.29150	NPW	Gravimetric, Hexane Extractable Material-SPE	[EPA 1664A]	Oil & grease - hem-SPE
Certified	Yes	NJ	WPP02.29200	NPW	Gravimetric, Silica Gel Treated-Hem	[EPA 1664A]	Oil & grease - sgt-non polar
Certified	Yes	NJ	WPP02.29250	NPW	Gravimetric, Silica Gel Treated-Hem-SPE	[EPA 1664A]	Oil & grease - non polar
Certified	Yes	NJ	WPP02.30000	NPW	Combustion or Oxidation	[SM 5310 B, C or D]	Total organic carbon (TOC)
Applied	No	NJ	WPP02.30050	NPW	Filtration and Oxidation or Combustion	[SM 5310B, C or D]	Dissolved organic carbon (DOC)
Certified	Yes	NJ	WPP02.30100	NPW	Pyrolysis, Titrimetric	[SM 5320 B]	Total organic halides (TOX)
Certified	Yes	NJ	WPP02.30500	NPW	Total Kjeldahl-N Minus Ammonia-N	[EPA 351.1, 2, 3,.4 - 350.1 .2 .3] [SM 4500-NH3 B, C, D, E, F, G, H]	Organic nitrogen
Certified	Yes	NJ	WPP02.31500	NPW	Ascorbic Acid, Manual Single Reagent	[SM 4500-P, E]	Orthophosphate
Certified	Yes	NJ	WPP02.33000	NPW	Manual Distillation, Colorimetric Auto	[EPA 420.1 - .4]	Phenols
Certified	Yes	NJ	WPP02.34000	NPW	Persulfate Digestion + Manual	[SM 4500-P B5 + E]	Phosphorus (total)
Certified	Yes	NJ	WPP02.36500	NPW	Digestion, ICP	[EPA 200.7]	Potassium
Certified	Yes	NJ	WPP02.38000	NPW	Gravimetric, 103-105 Degrees C	[SM 2540 B]	Residue - total
Certified	Yes	NJ	WPP02.38500	NPW	Gravimetric, 180 Degrees C	[SM 2540 C]	Residue - filterable (TDS)
Certified	Yes	NJ	WPP02.39000	NPW	Gravimetric, 103-105 Degrees C, Post Washing	[SM 2540 D]	Residue - nonfilterable (TSS)
Certified	Yes	NJ	WPP02.39500	NPW	Volumetric (Imhoff Cone) or Gravimetric	[SM 2540 F]	Residue - settleable
Certified	Yes	NJ	WPP02.40000	NPW	Gravimetric, 550 Degrees C	[EPA 160.4]	Residue - volatile
Certified	Yes	NJ	WPP02.42500	NPW	0.45u Filtration - ICP	[EPA 200.7]	Silica - dissolved
Certified	Yes	NJ	WPP02.44000	NPW	Digestion, ICP	[EPA 200.7]	Sodium
Certified	Yes	NJ	WPP02.45500	NPW	Wheatstone Bridge	[EPA 120.1] [SM 2510 B]	Specific conductance
Certified	Yes	NJ	WPP02.47100	NPW	Ion Chromatography	[EPA 300.0] [SM 4110 B] [EPA 300.1]	Sulfate
Certified	Yes	NJ	WPP02.48000	NPW	Colorimetric (Methylene Blue)	[SM 4500-S D]	Sulfides
Certified	Yes	NJ	WPP02.48500	NPW	Colorimetric (Methylene Blue)	[SM 5540 C]	Surfactants
Certified	Yes	NJ	WPP02.50000	NPW	Nephelometric	[EPA 180.1] [SM 2130 B]	Turbidity

KEY: AI = Air and Emissions, BT = Biological Tissues, DW = Drinking Water, NPW = Non-Potable Water, SCM = Solid and Chemical Materials

ANNUAL CERTIFIED PARAMETER LIST AND CURRENT STATUS

Effective as of 07/01/2011 until 06/30/2012

Laboratory Name: ENVIRONMENTAL SCIENCE CORPORATION Laboratory Number: TN002 Activity ID: NLC110001
12065 LEBANON RD
MT. JULIET, TN 37122

Category: WPP03 -- Analyze-Immediately Inorganic Parameters

Status	Eligible to Report NJ Data	State	Code	Matrix	Technique Description	Approved Method	Parameter Description
Certified	Yes	NJ	WPP03.05000	NPW	Spectrophotometric, DPD	[SM 4500-Cl G]	Chlorine
Certified	Yes	NJ	WPP03.05200	NPW	Continuous DPD, Colorimetric	[SM 4500-Cl G]	Chlorine
Certified	Yes	NJ	WPP03.07000	NPW	Winkler, Azide Modification	[SM 4500-O C]	Oxygen (dissolved)
Certified	Yes	NJ	WPP03.08000	NPW	Electrode	[SM 4500-O G]	Oxygen (dissolved)
Certified	Yes	NJ	WPP03.09000	NPW	Electrometric	[SM 4500-H B]	pH
Certified	Yes	NJ	WPP03.12000	NPW	Titrimetric, Iodine-Iodate	[SM 4500-SO3 B]	Sulfite - SO3
Certified	Yes	NJ	WPP03.14000	NPW	Thermometric	[SM 2550 B]	Temperature

Category: WPP04 -- Inorganic Parameters, Metals

Status	Eligible to Report NJ Data	State	Code	Matrix	Technique Description	Approved Method	Parameter Description
Certified	Yes	NJ	WPP04.02000	NPW	Digestion, ICP	[EPA 200.7]	Aluminum
Certified	Yes	NJ	WPP04.04500	NPW	Digestion, ICP	[EPA 200.7]	Antimony
Certified	No	NJ	WPP04.04600	NPW	ICP/MS	[EPA 200.8]	Antimony
Certified	Yes	NJ	WPP04.05600	NPW	Digestion, ICP	[EPA 200.7]	Arsenic
Certified	No	NJ	WPP04.05700	NPW	ICP/MS	[EPA 200.8]	Arsenic
Certified	Yes	NJ	WPP04.08000	NPW	Digestion, ICP	[EPA 200.7]	Barium
Certified	No	NJ	WPP04.08200	NPW	ICP/MS	[EPA 200.8]	Barium
Certified	Yes	NJ	WPP04.11000	NPW	Digestion, ICP	[EPA 200.7]	Beryllium
Certified	No	NJ	WPP04.11100	NPW	ICP/MS	[EPA 200.8]	Beryllium
Certified	Yes	NJ	WPP04.13500	NPW	Digestion, ICP	[EPA 200.7]	Cadmium
Certified	No	NJ	WPP04.13600	NPW	ICP/MS	[EPA 200.8]	Cadmium
Certified	Yes	NJ	WPP04.15000	NPW	0.45u Filter, Colorimetric DPC	[SM 3500-Cr D (18/19th ed)] [SM 3500-Cr B (20th ed)]	Chromium (VI)
Certified	Yes	NJ	WPP04.15100	NPW	0.45u Filter, Ion Chromatography	[EPA 218.6] [SM 3500-Cr C (20th ed)]	Chromium (VI)
Certified	Yes	NJ	WPP04.18000	NPW	Digestion, ICP	[EPA 200.7]	Chromium
Certified	No	NJ	WPP04.18100	NPW	ICP/MS	[EPA 200.8]	Chromium
Certified	Yes	NJ	WPP04.19500	NPW	Digestion, ICP	[EPA 200.7]	Cobalt
Certified	Yes	NJ	WPP04.21500	NPW	Digestion, ICP	[EPA 200.7]	Copper
Certified	No	NJ	WPP04.21600	NPW	ICP/MS	[EPA 200.8]	Copper
Certified	Yes	NJ	WPP04.26500	NPW	Digestion, ICP	[EPA 200.7]	Iron

KEY: AE = Air and Emissions, BT = Biological Tissues, DW = Drinking Water, NPW = Non-Potable Water, SCM = Solid and Chemical Materials

New Jersey Department of Environmental Protection

National Environmental Laboratory Accreditation Program

ANNUAL CERTIFIED PARAMETER LIST AND CURRENT STATUS

Effective as of 07/01/2011 until 06/30/2012

Laboratory Name: ENVIRONMENTAL SCIENCE CORPORATION Laboratory Number: TN002 Activity ID: NLC110001
12065 LEBANON RD
MT. JULIET, TN 37122

Category: WPP04 – Inorganic Parameters, Metals

Status	Eligible to Report NJ Data	State	Code	Matrix	Technique Description	Approved Method	Parameter Description
Certified	Yes	NJ	WPP04.27001	NPW	Digestion, Colorimetric (Phenanthroline)	[SM 3500-Fe B (20th ed)]	Iron, Ferrous
Certified	Yes	NJ	WPP04.28000	NPW	Digestion, ICP	[EPA 200.7]	Lead
Certified	No	NJ	WPP04.28100	NPW	ICP/MS	[EPA 200.8]	Lead
Certified	Yes	NJ	WPP04.31000	NPW	Digestion, ICP	[EPA 200.7]	Manganese
Certified	No	NJ	WPP04.31100	NPW	ICP/MS	[EPA 200.8]	Manganese
Certified	Yes	NJ	WPP04.33000	NPW	Manual Cold Vapor	[EPA 245.1]	Mercury
Applied	No	NJ	WPP04.33200	NPW	Purge & Trap Atomic Fluorescence	[EPA 1631E]	Mercury
Certified	Yes	NJ	WPP04.35000	NPW	Digestion, ICP	[EPA 200.7]	Molybdenum
Certified	No	NJ	WPP04.35200	NPW	ICP/MS	[EPA 200.8]	Molybdenum
Certified	Yes	NJ	WPP04.37500	NPW	Digestion, ICP	[EPA 200.7]	Nickel
Certified	No	NJ	WPP04.37600	NPW	ICP/MS	[EPA 200.8]	Nickel
Certified	Yes	NJ	WPP04.45500	NPW	Digestion, ICP	[EPA 200.7]	Selenium
Certified	No	NJ	WPP04.45600	NPW	ICP/MS	[EPA 200.8]	Selenium
Certified	Yes	NJ	WPP04.48000	NPW	Digestion, ICP	[EPA 200.7]	Silver
Certified	No	NJ	WPP04.48200	NPW	ICP/MS	[EPA 200.8]	Silver
Certified	Yes	NJ	WPP04.50000	NPW	Digestion, ICP	[EPA 200.7]	Thallium
Certified	No	NJ	WPP04.50100	NPW	ICP/MS	[EPA 200.8]	Thallium
Certified	Yes	NJ	WPP04.51100	NPW	Digestion, ICP	[EPA 200.7]	Tin
Certified	No	NJ	WPP04.51200	NPW	ICP/MS	[EPA 200.8]	Tin
Certified	Yes	NJ	WPP04.52050	NPW	Digestion, ICP	[EPA 200.7]	Titanium
Certified	Yes	NJ	WPP04.54000	NPW	Digestion, ICP	[EPA 200.7]	Vanadium
Certified	No	NJ	WPP04.54100	NPW	ICP/MS	[EPA 200.8]	Vanadium
Certified	Yes	NJ	WPP04.56500	NPW	Digestion, ICP	[EPA 200.7]	Zinc
Certified	No	NJ	WPP04.56600	NPW	ICP/MS	[EPA 200.8]	Zinc

Category: WPP05 – Organic Parameters, Chromatography

Status	Eligible to Report NJ Data	State	Code	Matrix	Technique Description	Approved Method	Parameter Description
Certified	Yes	NJ	WPP05.02010	NPW	Purge & Trap, GC (PID)	[EPA 602] [USER DEFINED SM 6200C 20th ED]	Benzene

KEY: AE = Air and Emissions, BT = Biological Tissues, DW = Drinking Water, NPW = Non-Potable Water, SCM = Solid and Chemical Materials

New Jersey Department of Environmental Protection

National Environmental Laboratory Accreditation Program

ANNUAL CERTIFIED PARAMETER LIST AND CURRENT STATUS

Effective as of 07/01/2011 until 06/30/2012

Laboratory Name: ENVIRONMENTAL SCIENCE CORPORATION Laboratory Number: TN002 Activity ID: NLC110001
12065 LEBANON RD
MT. JULIET, TN 37122

Category: WPP05 – Organic Parameters, Chromatography

Status	Eligible to Report NJ Data	State	Code	Matrix	Technique Description	Approved Method	Parameter Description
Certified	Yes	NJ	WPP05.02060	NPW	Purge & Trap, GC (PID)	[EPA 602] [USER DEFINED SM 6200C 20th ED]	Ethylbenzene
Certified	Yes	NJ	WPP05.02062	NPW	Purge & Trap, GC (PID)	[EPA 602] [USER DEFINED SM 6200C 20th ED]	Methyl tert-butyl ether
Certified	Yes	NJ	WPP05.02064	NPW	Purge & Trap, GC (PID)	[EPA 602] [USER DEFINED SM 6200C 20th ED]	Tert-butyl alcohol
Certified	Yes	NJ	WPP05.02070	NPW	Purge & Trap, GC (PID)	[EPA 602] [USER DEFINED SM 6200C 20th ED]	Toluene
Certified	Yes	NJ	WPP05.02080	NPW	Purge & Trap, GC (PID)	[EPA 602] [USER DEFINED SM 6200C 20th ED]	Xylenes (total)
Certified	Yes	NJ	WPP05.09010	NPW	Extract/GC (ECD)	[EPA 608] [SM 6630 B] [SM 6630 C]	Aldrin
Certified	Yes	NJ	WPP05.09020	NPW	Extract/GC (ECD)	[EPA 608] [SM 6630 B] [SM 6630 C]	Alpha BHC
Certified	Yes	NJ	WPP05.09030	NPW	Extract/GC (ECD)	[EPA 608] [SM 6630 C]	Beta BHC
Certified	Yes	NJ	WPP05.09040	NPW	Extract/GC (ECD)	[EPA 608] [SM 6630 C]	Delta BHC
Certified	Yes	NJ	WPP05.09050	NPW	Extract/GC (ECD)	[EPA 608] [SM 6630 B] [SM 6630 C]	Lindane (gamma BHC)
Certified	Yes	NJ	WPP05.09060	NPW	Extract/GC (ECD)	[EPA 608] [SM 6630 B] [SM 6630 C]	Chlordane
Certified	Yes	NJ	WPP05.09062	NPW	Extract/GC (ECD)	[EPA 608] [USER DEFINED SM 6630C]	Chlordane (alpha)
Certified	Yes	NJ	WPP05.09063	NPW	Extract/GC (ECD)	[EPA 608] [USER DEFINED SM 6630C]	Chlordane (gamma)
Certified	Yes	NJ	WPP05.09066	NPW	Extract/GC (ECD)	[EPA 608]	Chloroneb
Certified	Yes	NJ	WPP05.09067	NPW	Extract/GC (ECD)	[EPA 608]	Chlorothalonil
Certified	Yes	NJ	WPP05.09070	NPW	Extract/GC (ECD)	[EPA 608] [SM 6630 B] [SM 6630 C]	DDD (4,4'-)
Certified	Yes	NJ	WPP05.09080	NPW	Extract/GC (ECD)	[EPA 608] [SM 6630 B] [SM 6630 C]	DDE (4,4'-)
Certified	Yes	NJ	WPP05.09090	NPW	Extract/GC (ECD)	[EPA 608] [SM 6630 B] [SM 6630 C]	DDT (4,4'-)
Certified	Yes	NJ	WPP05.09100	NPW	Extract/GC (ECD)	[EPA 608] [SM 6630 B] [SM 6630 C]	Dieldrin
Certified	Yes	NJ	WPP05.09110	NPW	Extract/GC (ECD)	[EPA 608] [SM 6630 B] [SM 6630 C]	Endosulfan I
Certified	Yes	NJ	WPP05.09120	NPW	Extract/GC (ECD)	[EPA 608] [SM 6630 B] [SM 6630 C]	Endosulfan II
Certified	Yes	NJ	WPP05.09130	NPW	Extract/GC (ECD)	[EPA 608] [SM 6630 C]	Endosulfan sulfate
Certified	Yes	NJ	WPP05.09140	NPW	Extract/GC (ECD)	[EPA 608] [SM 6630 B] [SM 6630 C]	Endrin
Certified	Yes	NJ	WPP05.09150	NPW	Extract/GC (ECD)	[EPA 608] [USER DEFINED SM 6630C]	Endrin aldehyde
Certified	Yes	NJ	WPP05.09160	NPW	Extract/GC (ECD)	[EPA 608] [USER DEFINED SM 6630C]	Endrin ketone
Certified	Yes	NJ	WPP05.09170	NPW	Extract/GC (ECD)	[EPA 608] [SM 6630 B] [SM 6630 C]	Heptachlor
Certified	Yes	NJ	WPP05.09180	NPW	Extract/GC (ECD)	[EPA 608] [SM 6630 B] [SM 6630 C]	Heptachlor epoxide
Certified	Yes	NJ	WPP05.09183	NPW	Extract/GC (ECD)	[EPA 608] [USER DEFINED SM 6630C]	Hexachlorobenzene

KEY: AE = Air and Emissions, BT = Biological Tissues, DW = Drinking Water, NPW = Non-Potable Water, SCM = Solid and Chemical Materials

ANNUAL CERTIFIED PARAMETER LIST AND CURRENT STATUS

Effective as of 07/01/2011 until 06/30/2012

Laboratory Name: ENVIRONMENTAL SCIENCE CORPORATION Laboratory Number: TN002 Activity ID: NLC110001
12065 LEBANON RD
MT. JULIET, TN 37122

Category: WPP05 – Organic Parameters, Chromatography

Status	Eligible to Report NJ Data	State	Code	Matrix	Technique Description	Approved Method	Parameter Description
Certified	Yes	NJ	WPP05.09190	NPW	Extract/GC (ECD)	[EPA 608] [SM 6630 B] [SM 6630 C]	Methoxychlor
Certified	Yes	NJ	WPP05.09200	NPW	Extract/GC (ECD)	[EPA 608] [SM 6630 B] [SM 6630 C]	Toxaphene
Applied	No	NJ	WPP05.09350	NPW	Extraction, GC, ECD	[EPA 1658]	D (2,4-)
Certified	Yes	NJ	WPP05.11010	NPW	Extract/GC (ECD)	[EPA 608]	PCB 1016
Certified	Yes	NJ	WPP05.11020	NPW	Extract/GC (ECD)	[EPA 608]	PCB 1221
Certified	Yes	NJ	WPP05.11030	NPW	Extract/GC (ECD)	[EPA 608]	PCB 1232
Certified	Yes	NJ	WPP05.11040	NPW	Extract/GC (ECD)	[EPA 608]	PCB 1242
Certified	Yes	NJ	WPP05.11050	NPW	Extract/GC (ECD)	[EPA 608]	PCB 1248
Certified	Yes	NJ	WPP05.11060	NPW	Extract/GC (ECD)	[EPA 608]	PCB 1254
Certified	Yes	NJ	WPP05.11070	NPW	Extract/GC (ECD)	[EPA 608]	PCB 1260
Certified	Yes	NJ	WPP05.13010	NPW	Extract/HPLC (UV/Fluorescence)	[EPA 610] [SM 6440 B]	Acenaphthene
Certified	Yes	NJ	WPP05.13020	NPW	Extract/HPLC (UV/Fluorescence)	[EPA 610] [SM 6440 B]	Acenaphthylene
Certified	Yes	NJ	WPP05.13030	NPW	Extract/HPLC (UV/Fluorescence)	[EPA 610] [SM 6440 B]	Anthracene
Certified	Yes	NJ	WPP05.13040	NPW	Extract/HPLC (UV/Fluorescence)	[EPA 610] [SM 6440 B]	Benzo(a)anthracene
Certified	Yes	NJ	WPP05.13050	NPW	Extract/HPLC (UV/Fluorescence)	[EPA 610] [SM 6440 B]	Benzo(a)pyrene
Certified	Yes	NJ	WPP05.13060	NPW	Extract/HPLC (UV/Fluorescence)	[EPA 610] [SM 6440 B]	Benzo(b)fluoranthene
Certified	Yes	NJ	WPP05.13070	NPW	Extract/HPLC (UV/Fluorescence)	[EPA 610] [SM 6440 B]	Benzo(ghi)perylene
Certified	Yes	NJ	WPP05.13080	NPW	Extract/HPLC (UV/Fluorescence)	[EPA 610] [SM 6440 B]	Benzo(k)fluoranthene
Certified	Yes	NJ	WPP05.13090	NPW	Extract/HPLC (UV/Fluorescence)	[EPA 610] [SM 6440 B]	Chrysene
Certified	Yes	NJ	WPP05.13100	NPW	Extract/HPLC (UV/Fluorescence)	[EPA 610] [SM 6440 B]	Dibenzo(a,h)anthracene
Certified	Yes	NJ	WPP05.13110	NPW	Extract/HPLC (UV/Fluorescence)	[EPA 610] [SM 6440 B]	Fluoranthene
Certified	Yes	NJ	WPP05.13120	NPW	Extract/HPLC (UV/Fluorescence)	[EPA 610] [SM 6440 B]	Fluorene
Certified	Yes	NJ	WPP05.13130	NPW	Extract/HPLC (UV/Fluorescence)	[EPA 610] [SM 6440 B]	Indeno(1,2,3-cd)pyrene
Certified	Yes	NJ	WPP05.13140	NPW	Extract/HPLC (UV/Fluorescence)	[EPA 610] [SM 6440 B]	Naphthalene
Certified	Yes	NJ	WPP05.13150	NPW	Extract/HPLC (UV/Fluorescence)	[EPA 610] [SM 6440 B]	Phenanthrene
Certified	Yes	NJ	WPP05.13160	NPW	Extract/HPLC (UV/Fluorescence)	[EPA 610] [SM 6440 B]	Pyrene

KEY: AE = Air and Emissions, BT = Biological Tissues, DW = Drinking Water, NPW = Non-Potable Water, SCM = Solid and Chemical Materials

New Jersey Department of Environmental Protection

National Environmental Laboratory Accreditation Program

ANNUAL CERTIFIED PARAMETER LIST AND CURRENT STATUS

Effective as of 07/01/2011 until 06/30/2012

Laboratory Name: ENVIRONMENTAL SCIENCE CORPORATION Laboratory Number: TN002 Activity ID: NLC110001
12065 LEBANON RD
MT. JULIET, TN 37122

Category: WPP06 – Organic Parameters, Chromatography/MS

Status	Eligible to Report NJ Data	State	Code	Matrix	Technique Description	Approved Method	Parameter Description
Certified	Yes	NJ	WPP06.02000	NPW	GC/MS, P & T, Capillary Column	[EPA 624] [SM 6200 B]	Allyl chloride
Certified	Yes	NJ	WPP06.02002	NPW	GC/MS, P & T, Capillary Column	[EPA 624]	Amyl alcohol (n-)
Certified	Yes	NJ	WPP06.02003	NPW	GC/MS, P & T, Capillary Column	[EPA 624] [USER DEFINED SM 6200 B]	Acetone
Certified	Yes	NJ	WPP06.02007	NPW	GC/MS, P & T, Capillary Column	[EPA 624] [SM 6200 B]	Acrolein
Certified	Yes	NJ	WPP06.02009	NPW	GC/MS, P & T, Capillary Column	[EPA 624] [SM 6200 B]	Acrylonitrile
Certified	Yes	NJ	WPP06.02010	NPW	GC/MS, P & T, Capillary Column	[EPA 624] [USER DEFINED SM 6200 B]	Benzene
Certified	Yes	NJ	WPP06.02015	NPW	GC/MS, P & T, Capillary Column	[EPA 624] [SM 6200 B]	Bromobenzene
Certified	Yes	NJ	WPP06.02017	NPW	GC/MS, P & T, Capillary Column	[EPA 624] [SM 6200 B]	Bromochloromethane
Certified	Yes	NJ	WPP06.02020	NPW	GC/MS, P & T, Capillary Column	[EPA 624] [USER DEFINED SM 6200 B]	Bromodichloromethane
Certified	Yes	NJ	WPP06.02025	NPW	GC/MS, P & T, Capillary Column	[EPA 624] [SM 6200 B]	Bromoethane
Certified	Yes	NJ	WPP06.02030	NPW	GC/MS, P & T, Capillary Column	[EPA 624] [USER DEFINED SM 6200 B]	Bromoform
Certified	Yes	NJ	WPP06.02040	NPW	GC/MS, P & T, Capillary Column	[EPA 624] [USER DEFINED SM 6200 B]	Bromomethane
Certified	Yes	NJ	WPP06.02041	NPW	GC/MS, P & T, Capillary Column	[EPA 624] [USER DEFINED SM 6200 B]	Butanone (2-)
Certified	Yes	NJ	WPP06.02043	NPW	GC/MS, P & T, Capillary Column	[EPA 624] [SM 6200 B]	Butadiene (2-chloro-1,3-)
Certified	Yes	NJ	WPP06.02044	NPW	GC/MS, P & T, Capillary Column	[EPA 624] [SM 6200 B]	Butyl benzene (n-)
Certified	Yes	NJ	WPP06.02045	NPW	GC/MS, P & T, Capillary Column	[EPA 624] [USER DEFINED SM 6200 B]	Carbon disulfide
Certified	Yes	NJ	WPP06.02050	NPW	GC/MS, P & T, Capillary Column	[EPA 624] [USER DEFINED SM 6200 B]	Carbon tetrachloride
Certified	Yes	NJ	WPP06.02060	NPW	GC/MS, P & T, Capillary Column	[EPA 624] [USER DEFINED SM 6200 B]	Chlorobenzene
Certified	Yes	NJ	WPP06.02070	NPW	GC/MS, P & T, Capillary Column	[EPA 624] [USER DEFINED SM 6200 B]	Chloroethane
Certified	Yes	NJ	WPP06.02080	NPW	GC/MS, P & T, Capillary Column	[EPA 624] [USER DEFINED SM 6200 B]	Chloroethyl vinyl ether (2-)
Certified	Yes	NJ	WPP06.02090	NPW	GC/MS, P & T, Capillary Column	[EPA 624] [USER DEFINED SM 6200 B]	Chloroform
Certified	Yes	NJ	WPP06.02100	NPW	GC/MS, P & T, Capillary Column	[EPA 624] [USER DEFINED SM 6200 B]	Chloromethane
Certified	Yes	NJ	WPP06.02103	NPW	GC/MS, P & T, Capillary Column	[EPA 624] [SM 6200 B]	Chlorotoluene (2-)
Certified	Yes	NJ	WPP06.02105	NPW	GC/MS, P & T, Capillary Column	[EPA 624] [SM 6200 B]	Chlorotoluene (4-)
Certified	Yes	NJ	WPP06.02106	NPW	GC/MS, P & T, Capillary Column	[EPA 624] [SM 6200 B]	Cyclohexanone
Certified	Yes	NJ	WPP06.02107	NPW	GC/MS, P & T, Capillary Column	[EPA 624] [SM 6200 B]	Dibromo-3-chloropropane (1,2-)
Certified	Yes	NJ	WPP06.02110	NPW	GC/MS, P & T, Capillary Column	[EPA 624] [USER DEFINED SM 6200 B]	Dibromochloromethane
Certified	Yes	NJ	WPP06.02115	NPW	GC/MS, P & T, Capillary Column	[EPA 624] [USER DEFINED SM 6200 B]	Dibromoethane (1,2-) (EDB)
Certified	Yes	NJ	WPP06.02116	NPW	GC/MS, P & T, Capillary Column	[EPA 624] [SM 6200 B]	Dibromomethane
Certified	Yes	NJ	WPP06.02118	NPW	GC/MS, P & T, Capillary Column	[EPA 624] [SM 6200 B]	Dichloro-2-butene (cis-1,4-)
Certified	Yes	NJ	WPP06.02120	NPW	GC/MS, P & T, Capillary Column	[EPA 624] [USER DEFINED SM 6200 B]	Dichlorobenzene (1,2-)
Certified	Yes	NJ	WPP06.02130	NPW	GC/MS, P & T, Capillary Column	[EPA 624] [USER DEFINED SM 6200 B]	Dichlorobenzene (1,3-)

KEY: AE = Air and Emissions, BT = Biological Tissues, DW = Drinking Water, NPW = Non-Potable Water, SCM = Solid and Chemical Materials

New Jersey Department of Environmental Protection

National Environmental Laboratory Accreditation Program

ANNUAL CERTIFIED PARAMETER LIST AND CURRENT STATUS

Effective as of 07/01/2011 until 06/30/2012

Laboratory Name: ENVIRONMENTAL SCIENCE CORPORATION Laboratory Number: TN002 Activity ID: NLC110001
12065 LEBANON RD
MT. JULIET, TN 37122

Category: WPP06 – Organic Parameters, Chromatography/MS

Status	Eligible to Report NJ Data	State	Code	Matrix	Technique Description	Approved Method	Parameter Description
Certified	Yes	NJ	WPP06.02140	NPW	GC/MS, P & T, Capillary Column	[EPA 624] [USER DEFINED SM 6200 B]	Dichlorobenzene (1,4-)
Certified	Yes	NJ	WPP06.02143	NPW	GC/MS, P & T, Capillary Column	[EPA 624] [SM 6200 B]	Dichloro-2-butene (trans-1,4-)
Certified	Yes	NJ	WPP06.02145	NPW	GC/MS, P & T, Capillary Column	[EPA 624] [USER DEFINED SM 6200 B]	Dichlorodifluoromethane
Certified	Yes	NJ	WPP06.02150	NPW	GC/MS, P & T, Capillary Column	[EPA 624] [USER DEFINED SM 6200 B]	Dichloroethane (1,1-)
Certified	Yes	NJ	WPP06.02160	NPW	GC/MS, P & T, Capillary Column	[EPA 624] [USER DEFINED SM 6200 B]	Dichloroethane (1,2-)
Certified	Yes	NJ	WPP06.02170	NPW	GC/MS, P & T, Capillary Column	[EPA 624] [USER DEFINED SM 6200 B]	Dichloroethene (1,1-)
Certified	Yes	NJ	WPP06.02175	NPW	GC/MS, P & T, Capillary Column	[EPA 624] [USER DEFINED SM 6200 B]	Dichloroethene (cis-1,2-)
Certified	Yes	NJ	WPP06.02180	NPW	GC/MS, P & T, Capillary Column	[EPA 624] [USER DEFINED SM 6200 B]	Dichloroethene (trans-1,2-)
Certified	Yes	NJ	WPP06.02190	NPW	GC/MS, P & T, Capillary Column	[EPA 624] [USER DEFINED SM 6200 B]	Dichloropropane (1,2-)
Certified	Yes	NJ	WPP06.02192	NPW	GC/MS, P & T, Capillary Column	[EPA 624] [SM 6200 B]	Dichloropropane (1,3-)
Certified	Yes	NJ	WPP06.02194	NPW	GC/MS, P & T, Capillary Column	[EPA 624] [SM 6200 B]	Dichloropropane (2,2-)
Certified	Yes	NJ	WPP06.02195	NPW	GC/MS, P & T, Capillary Column	[EPA 624] [SM 6200 B]	Dichloropropene (1,1-)
Certified	Yes	NJ	WPP06.02198	NPW	GC/MS, P & T, Capillary Column	[EPA 624] [SM 6200 B]	Diethyl ether (Ethyl ether)
Certified	Yes	NJ	WPP06.02200	NPW	GC/MS, P & T, Capillary Column	[EPA 624] [USER DEFINED SM 6200 B]	Dichloropropene (cis-1,3-)
Certified	Yes	NJ	WPP06.02210	NPW	GC/MS, P & T, Capillary Column	[EPA 624] [USER DEFINED SM 6200 B]	Dichloropropene (trans-1,3-)
Certified	Yes	NJ	WPP06.02212	NPW	GC/MS, P & T, Capillary Column	[EPA 624] [USER DEFINED SM 6200 B]	Ethyl acetate
Certified	Yes	NJ	WPP06.02220	NPW	GC/MS, P & T, Capillary Column	[EPA 624] [USER DEFINED SM 6200 B]	Ethylbenzene
Certified	Yes	NJ	WPP06.02223	NPW	GC/MS, P & T, Capillary Column	[EPA 624] [USER DEFINED SM 6200 B]	Hexane (n-)
Certified	Yes	NJ	WPP06.02225	NPW	GC/MS, P & T, Capillary Column	[EPA 624] [USER DEFINED SM 6200 B]	Isopropanol
Certified	Yes	NJ	WPP06.02230	NPW	GC/MS, P & T, Capillary Column	[EPA 624] [USER DEFINED SM 6200 B]	Methylene chloride (Dichloromethane)
Certified	Yes	NJ	WPP06.02232	NPW	GC/MS, P & T, Capillary Column	[EPA 624] [USER DEFINED SM 6200 B]	Methyl tert-butyl ether
Certified	Yes	NJ	WPP06.02233	NPW	GC/MS, P & T, Capillary Column	[EPA 624] [USER DEFINED SM 6200 B]	Methyl isobutyl ketone (MIBK)
Certified	Yes	NJ	WPP06.02234	NPW	GC/MS, P & T, Capillary Column	[EPA 624] [USER DEFINED SM 6200 B]	Tert-butyl alcohol
Certified	Yes	NJ	WPP06.02235	NPW	GC/MS, P & T, Capillary Column	[EPA 624] [USER DEFINED SM 6200 B]	Tetrahydrofuran
Certified	Yes	NJ	WPP06.02238	NPW	GC/MS, P & T, Capillary Column	[EPA 624] [USER DEFINED SM 6200 B]	Styrene
Certified	Yes	NJ	WPP06.02240	NPW	GC/MS, P & T, Capillary Column	[EPA 624] [USER DEFINED SM 6200 B]	Tetrachloroethane (1,1,2,2-)
Certified	Yes	NJ	WPP06.02245	NPW	GC/MS, P & T, Capillary Column	[EPA 624] [SM 6200 B]	Tetrachloroethane (1,1,1,2-)
Certified	Yes	NJ	WPP06.02250	NPW	GC/MS, P & T, Capillary Column	[EPA 624] [USER DEFINED SM 6200 B]	Tetrachloroethene
Certified	Yes	NJ	WPP06.02260	NPW	GC/MS, P & T, Capillary Column	[EPA 624] [USER DEFINED SM 6200 B]	Toluene
Certified	Yes	NJ	WPP06.02270	NPW	GC/MS, P & T, Capillary Column	[EPA 624] [USER DEFINED SM 6200 B]	Trichloroethane (1,1,1-)
Certified	Yes	NJ	WPP06.02280	NPW	GC/MS, P & T, Capillary Column	[EPA 624] [USER DEFINED SM 6200 B]	Trichloroethane (1,1,2-)
Certified	Yes	NJ	WPP06.02290	NPW	GC/MS, P & T, Capillary Column	[EPA 624] [USER DEFINED SM 6200 B]	Trichloroethene

KEY: AE = Air and Emissions, BT = Biological Tissues, DW = Drinking Water, NPW = Non-Potable Water, SCM = Solid and Chemical Materials

New Jersey Department of Environmental Protection

National Environmental Laboratory Accreditation Program

ANNUAL CERTIFIED PARAMETER LIST AND CURRENT STATUS

Effective as of 07/01/2011 until 06/30/2012

Laboratory Name: ENVIRONMENTAL SCIENCE CORPORATION Laboratory Number: TN002 Activity ID: NLC110001
12065 LEBANON RD
MT. JULIET, TN 37122

Category: WPP06 – Organic Parameters, Chromatography/MS

Status	Eligible to Report NJ Data	State	Code	Matrix	Technique Description	Approved Method	Parameter Description
Certified	Yes	NJ	WPP06.02300	NPW	GC/MS, P & T, Capillary Column	[EPA 624] [USER DEFINED SM 6200 B]	Trichlorofluoromethane
Certified	Yes	NJ	WPP06.02305	NPW	GC/MS, P & T, Capillary Column	[EPA 624] [USER DEFINED SM 6200 B]	Trichloro (1,1,2-) trifluoroethane (1,2,2-)
Certified	Yes	NJ	WPP06.02307	NPW	GC/MS, P & T, Capillary Column	[EPA 624] [USER DEFINED SM 6200 B]	Vinyl acetate
Certified	Yes	NJ	WPP06.02310	NPW	GC/MS, P & T, Capillary Column	[EPA 624] [USER DEFINED SM 6200 B]	Vinyl chloride
Certified	Yes	NJ	WPP06.02312	NPW	GC/MS, P & T, Capillary Column	[EPA 624] [USER DEFINED SM 6200 B]	Xylenes (total)
Certified	Yes	NJ	WPP06.02314	NPW	GC/MS, P & T, Capillary Column	[EPA 624] [SM 6200 B]	Xylene (m-)
Certified	Yes	NJ	WPP06.02315	NPW	GC/MS, P & T, Capillary Column	[EPA 624] [USER DEFINED SM 6200 B]	Xylene (o-)
Certified	Yes	NJ	WPP06.02316	NPW	GC/MS, P & T, Capillary Column	[EPA 624] [SM 6200 B]	Xylene (p-)
Certified	Yes	NJ	WPP06.02320	NPW	GC/MS, P & T, Capillary Column	[EPA 624] [USER DEFINED SM 6200 B]	Acetonitrile
Certified	Yes	NJ	WPP06.02322	NPW	GC/MS, P&T, Capillary Column	[EPA 624]	Cyclohexane
Certified	Yes	NJ	WPP06.02325	NPW	GC/MS, P & T, Capillary Column	[EPA 624] [USER DEFINED SM 6200 B]	Hexanone (2-)
Certified	Yes	NJ	WPP06.02326	NPW	GC/MS, P&T, Capillary Column	[EPA 624]	Methyl acetate
Certified	Yes	NJ	WPP06.02328	NPW	GC/MS, P&T, Capillary Column	[EPA 624]	Methylcyclohexane
Certified	Yes	NJ	WPP06.02330	NPW	GC/MS, P & T, Capillary Column	[EPA 624] [USER DEFINED SM 6200 B]	Methyl iodide
Certified	Yes	NJ	WPP06.02335	NPW	GC/MS, P & T, Capillary Column	[EPA 624] [SM 6200 B]	Ethyl-tert-butyl Ether [ETBE]
Certified	Yes	NJ	WPP06.02400	NPW	GC/MS, P & T, Capillary Column	[EPA 624] [SM 6200 B]	Diisopropyl Ether [DIPE]
Certified	Yes	NJ	WPP06.02410	NPW	GC/MS, P & T, Capillary Column	[EPA 624] [SM 6200 B]	Dioxane (1,4-)
Certified	Yes	NJ	WPP06.02415	NPW	GC/MS, P&T, Capillary Column	[EPA 624]	Butanol (1-)
Certified	Yes	NJ	WPP06.02420	NPW	GC/MS, P & T, Capillary Column	[EPA 624] [SM 6200 B]	Ethanol
Certified	Yes	NJ	WPP06.02430	NPW	GC/MS, P & T, Capillary Column	[EPA 624] [SM 6200 B]	Ethyl methacrylate
Certified	Yes	NJ	WPP06.02440	NPW	GC/MS, P & T, Capillary Column	[EPA 624] [SM 6200 B]	Hexachlorobutadiene (1,3-)
Certified	Yes	NJ	WPP06.02450	NPW	GC/MS, P & T, Capillary Column	[EPA 624] [SM 6200 B]	Iso-butyl alcohol
Certified	Yes	NJ	WPP06.02460	NPW	GC/MS, P & T, Capillary Column	[EPA 624] [SM 6200 B]	Isopropylbenzene
Certified	Yes	NJ	WPP06.02470	NPW	GC/MS, P & T, Capillary Column	[EPA 624] [SM 6200 B]	Isopropyltoluene (4-)
Certified	Yes	NJ	WPP06.02490	NPW	GC/MS, P & T, Capillary Column	[EPA 624] [SM 6200 B]	Methacrylonitrile
Certified	Yes	NJ	WPP06.02500	NPW	GC/MS, P & T, Capillary Column	[EPA 624] [SM 6200 B]	Methyl methacrylate
Certified	Yes	NJ	WPP06.02510	NPW	GC/MS, P & T, Capillary Column	[EPA 624] [SM 6200 B]	Naphthalene
Certified	Yes	NJ	WPP06.02515	NPW	GC/MS, P&T, Capillary Column	[EPA 624]	Octane (-n)
Certified	Yes	NJ	WPP06.02517	NPW	GC/MS, P&T, Capillary Column	[EPA 624]	Nitropropane (2-)
Certified	Yes	NJ	WPP06.02520	NPW	GC/MS, P & T, Capillary Column	[EPA 624] [SM 6200 B]	Propionitrile
Certified	Yes	NJ	WPP06.02530	NPW	GC/MS, P & T, Capillary Column	[EPA 624] [SM 6200 B]	Pentachloroethane
Certified	Yes	NJ	WPP06.02540	NPW	GC/MS, P & T, Capillary Column	[EPA 624] [SM 6200 B]	Propylbenzene (n-)

KEY: AE = Air and Emissions, BT = Biological Tissues, DW = Drinking Water, NPW = Non-Potable Water, SCM = Solid and Chemical Materials

New Jersey Department of Environmental Protection

National Environmental Laboratory Accreditation Program

ANNUAL CERTIFIED PARAMETER LIST AND CURRENT STATUS

Effective as of 07/01/2011 until 06/30/2012

Laboratory Name: ENVIRONMENTAL SCIENCE CORPORATION Laboratory Number: TN002 Activity ID: NLC110001
12065 LEBANON RD
MT. JULIET, TN 37122

Category: WPP06 – Organic Parameters, Chromatography/MS

Status	Eligible to Report NJ Data	State	Code	Matrix	Technique Description	Approved Method	Parameter Description
Certified	Yes	NJ	WPP06.02550	NPW	GC/MS, P & T, Capillary Column	[EPA 624] [SM 6200 B]	Sec-butylbenzene
Certified	Yes	NJ	WPP06.02570	NPW	GC/MS, P & T, Capillary Column	[EPA 624] [SM 6200 B]	tert-Amylmethyl ether [TAME]
Certified	Yes	NJ	WPP06.02590	NPW	GC/MS, P & T, Capillary Column	[EPA 624] [SM 6200 B]	Tert-butylbenzene
Certified	Yes	NJ	WPP06.02610	NPW	GC/MS, P & T, Capillary Column	[EPA 624] [SM 6200 B]	Trichlorobenzene (1,2,3-)
Certified	Yes	NJ	WPP06.02620	NPW	GC/MS, P & T, Capillary Column	[EPA 624] [SM 6200 B]	Trichlorobenzene (1,2,4-)
Certified	Yes	NJ	WPP06.02630	NPW	GC/MS, P & T, Capillary Column	[EPA 624] [SM 6200 B]	Trichloropropane (1,2,3-)
Certified	Yes	NJ	WPP06.02640	NPW	GC/MS, P & T, Capillary Column	[EPA 624] [SM 6200 B]	Trimethylbenzene (1,2,3-)
Certified	Yes	NJ	WPP06.02650	NPW	GC/MS, P & T, Capillary Column	[EPA 624] [SM 6200 B]	Trimethylbenzene (1,2,4-)
Certified	Yes	NJ	WPP06.02660	NPW	GC/MS, P & T, Capillary Column	[EPA 624] [SM 6200 B]	Trimethylbenzene (1,3,5-)
Certified	Yes	NJ	WPP06.03010	NPW	Extract, GC/MS	[EPA 625] [SM 6410 B]	Acenaphthene
Certified	Yes	NJ	WPP06.03020	NPW	Extract, GC/MS	[EPA 625] [SM 6410 B]	Acenaphthylene
Certified	Yes	NJ	WPP06.03030	NPW	Extract, GC/MS	[EPA 625] [SM 6410 B]	Anthracene
Certified	Yes	NJ	WPP06.03040	NPW	Extract, GC/MS	[EPA 625] [SM 6410 B]	Benzo(a)anthracene
Certified	Yes	NJ	WPP06.03050	NPW	Extract, GC/MS	[EPA 625] [SM 6410 B]	Benzo(b)fluoranthene
Certified	Yes	NJ	WPP06.03060	NPW	Extract, GC/MS	[EPA 625] [SM 6410 B]	Benzo(k)fluoranthene
Certified	Yes	NJ	WPP06.03070	NPW	Extract, GC/MS	[EPA 625] [SM 6410 B]	Benzo(a)pyrene
Certified	Yes	NJ	WPP06.03080	NPW	Extract, GC/MS	[EPA 625] [SM 6410 B]	Benzo(ghi)perylene
Certified	Yes	NJ	WPP06.03090	NPW	Extract, GC/MS	[EPA 625] [SM 6410 B]	Butyl benzyl phthalate
Certified	Yes	NJ	WPP06.03100	NPW	Extract, GC/MS	[EPA 625] [SM 6410 B]	Bis (2-chloroethyl) ether
Certified	Yes	NJ	WPP06.03110	NPW	Extract, GC/MS	[EPA 625] [SM 6410 B]	Bis (2-chloroethoxy) methane
Certified	Yes	NJ	WPP06.03120	NPW	Extract, GC/MS	[EPA 625] [SM 6410 B]	Bis (2-ethylhexyl) phthalate
Certified	Yes	NJ	WPP06.03130	NPW	Extract, GC/MS	[EPA 625] [SM 6410 B]	Bis (2-chloroisopropyl) ether
Certified	Yes	NJ	WPP06.03140	NPW	Extract, GC/MS	[EPA 625] [SM 6410 B]	Bromophenyl-phenyl ether (4-)
Certified	Yes	NJ	WPP06.03145	NPW	Extract, GC/MS	[EPA 625] [SM 6410 B]	Biphenylamine (4-)
Certified	Yes	NJ	WPP06.03150	NPW	Extract, GC/MS	[EPA 625] [SM 6410 B]	Chloronaphthalene (2-)
Certified	Yes	NJ	WPP06.03160	NPW	Extract, GC/MS	[EPA 625] [SM 6410 B]	Chlorophenyl-phenyl ether (4-)
Certified	Yes	NJ	WPP06.03170	NPW	Extract, GC/MS	[EPA 625] [SM 6410 B]	Chrysene
Certified	Yes	NJ	WPP06.03172	NPW	Extract, GC/MS	[EPA 625] [SM 6410 B]	Chloronaphthalene (1-)
Certified	Yes	NJ	WPP06.03180	NPW	Extract, GC/MS	[EPA 625] [SM 6410 B]	Dibenzo(a,h)anthracene
Certified	Yes	NJ	WPP06.03186	NPW	Extract, GC/MS	[EPA 625]	Dibenzofuran
Certified	Yes	NJ	WPP06.03190	NPW	Extract, GC/MS	[EPA 625] [SM 6410 B]	Di-n-butyl phthalate
Certified	Yes	NJ	WPP06.03230	NPW	Extract, GC/MS	[EPA 625] [SM 6410 B]	Dichlorobenzidine (3,3'-)

KEY: AE = Air and Emissions, BT = Biological Tissues, DW = Drinking Water, NPW = Non-Potable Water, SCM = Solid and Chemical Materials

New Jersey Department of Environmental Protection

National Environmental Laboratory Accreditation Program

ANNUAL CERTIFIED PARAMETER LIST AND CURRENT STATUS

Effective as of 07/01/2011 until 06/30/2012

Laboratory Name: ENVIRONMENTAL SCIENCE CORPORATION Laboratory Number: TN002 Activity ID: NLC110001
12065 LEBANON RD
MT. JULIET, TN 37122

Category: WPP06 – Organic Parameters, Chromatography/MS

Status	Eligible to Report NJ Data	State	Code	Matrix	Technique Description	Approved Method	Parameter Description
Certified	Yes	NJ	WPP06.03240	NPW	Extract, GC/MS	[EPA 625] [SM 6410 B]	Diethyl phthalate
Certified	Yes	NJ	WPP06.03250	NPW	Extract, GC/MS	[EPA 625] [SM 6410 B]	Dimethyl phthalate
Certified	Yes	NJ	WPP06.03260	NPW	Extract, GC/MS	[EPA 625] [SM 6410 B]	Dinitrotoluene (2,4-)
Certified	Yes	NJ	WPP06.03270	NPW	Extract, GC/MS	[EPA 625] [SM 6410 B]	Dinitrotoluene (2,6-)
Certified	Yes	NJ	WPP06.03280	NPW	Extract, GC/MS	[EPA 625] [SM 6410 B]	Di-n-octyl phthalate
Certified	Yes	NJ	WPP06.03285	NPW	Extract, GC/MS	[EPA 625] [SM 6410 B]	Famphur
Certified	Yes	NJ	WPP06.03290	NPW	Extract, GC/MS	[EPA 625] [SM 6410 B]	Fluoranthene
Certified	Yes	NJ	WPP06.03300	NPW	Extract, GC/MS	[EPA 625] [SM 6410 B]	Fluorene
Certified	Yes	NJ	WPP06.03310	NPW	Extract, GC/MS	[EPA 625] [SM 6410 B]	Hexachlorobenzene
Certified	Yes	NJ	WPP06.03320	NPW	Extract, GC/MS	[EPA 625] [SM 6410 B]	Hexachlorobutadiene (1,3-)
Certified	Yes	NJ	WPP06.03330	NPW	Extract, GC/MS	[EPA 625] [SM 6410 B]	Hexachloroethane
Certified	Yes	NJ	WPP06.03333	NPW	Extract, GC/MS	[EPA 625] [SM 6410 B]	Hexachlorophene
Certified	Yes	NJ	WPP06.03335	NPW	Extract, GC/MS	[EPA 625] [SM 6410 B]	Hexachloropropene
Certified	Yes	NJ	WPP06.03340	NPW	Extract, GC/MS	[EPA 625] [SM 6410 B]	Indeno(1,2,3-cd)pyrene
Certified	Yes	NJ	WPP06.03350	NPW	Extract, GC/MS	[EPA 625] [SM 6410B]	Isophorone
Certified	Yes	NJ	WPP06.03355	NPW	Extract, GC/MS	[EPA 625] [SM 6410 B]	Kepone
Certified	Yes	NJ	WPP06.03358	NPW	Extract, GC/MS	[EPA 625]	Methylnaphthalene (2-)
Certified	Yes	NJ	WPP06.03360	NPW	Extract, GC/MS	[EPA 625] [SM 6410 B]	Naphthalene
Certified	Yes	NJ	WPP06.03362	NPW	Extract, GC/MS	[EPA 625] [SM 6410 B]	Napththylamine (1-)
Certified	Yes	NJ	WPP06.03364	NPW	Extract, GC/MS	[EPA 625] [SM 6410 B]	Napththylamine (2-)
Certified	Yes	NJ	WPP06.03366	NPW	Extract, GC/MS	[EPA 625]	Chloroaniline (4-)
Certified	Yes	NJ	WPP06.03367	NPW	Extract, GC/MS	[EPA 625]	Nitroaniline (2-)
Certified	Yes	NJ	WPP06.03368	NPW	Extract, GC/MS	[EPA 625]	Nitroaniline (3-)
Certified	Yes	NJ	WPP06.03369	NPW	Extract, GC/MS	[EPA 625]	Nitroaniline (4-)
Certified	Yes	NJ	WPP06.03370	NPW	Extract, GC/MS	[EPA 625] [SM 6410 B]	Nitrobenzene
Certified	Yes	NJ	WPP06.03380	NPW	Extract, GC/MS	[EPA 625] [SM 6410 B]	N-Nitroso-di-n-propylamine
Certified	Yes	NJ	WPP06.03390	NPW	Extract, GC/MS	[EPA 625] [SM 6410 B]	Phenanthrene
Certified	Yes	NJ	WPP06.03400	NPW	Extract, GC/MS	[EPA 625] [SM 6410 B]	Pyrene
Certified	Yes	NJ	WPP06.03402	NPW	Extract, GC/MS	[EPA 625]	Pentachlorobenzene
Certified	Yes	NJ	WPP06.03405	NPW	Extract, GC/MS	[EPA 625]	Tetrachlorobenzene (1,2,4,5-)
Certified	Yes	NJ	WPP06.03410	NPW	Extract, GC/MS	[EPA 625] [SM 6410 B]	Trichlorobenzene (1,2,4-)
Certified	Yes	NJ	WPP06.03420	NPW	Extract, GC/MS	[EPA 625] [SM 6410 B]	Methyl phenol (4-chloro-3-)

KEY: AE = Air and Emissions, BT = Biological Tissues, DW = Drinking Water, NPW = Non-Potable Water, SCM = Solid and Chemical Materials

New Jersey Department of Environmental Protection

National Environmental Laboratory Accreditation Program

ANNUAL CERTIFIED PARAMETER LIST AND CURRENT STATUS

Effective as of 07/01/2011 until 06/30/2012

Laboratory Name: ENVIRONMENTAL SCIENCE CORPORATION Laboratory Number: TN002 Activity ID: NLC110001
12065 LEBANON RD
MT. JULIET, TN 37122

Category: WPP06 -- Organic Parameters, Chromatography/MS

Status	Eligible to Report NJ Data	State	Code	Matrix	Technique Description	Approved Method	Parameter Description
Certified	Yes	NJ	WPP06.03430	NPW	Extract, GC/MS	[EPA 625] [SM 6410 B]	Chlorophenol (2-)
Certified	Yes	NJ	WPP06.03440	NPW	Extract, GC/MS	[EPA 625] [SM 6410 B]	Dichlorophenol (2,4-)
Certified	Yes	NJ	WPP06.03450	NPW	Extract, GC/MS	[EPA 625] [SM 6410 B]	Dimethylphenol (2,4-)
Certified	Yes	NJ	WPP06.03460	NPW	Extract, GC/MS	[EPA 625] [SM 6410 B]	Dinitrophenol (2,4-)
Certified	Yes	NJ	WPP06.03470	NPW	Extract, GC/MS	[EPA 625] [SM 6410 B]	Dinitrophenol (2-methyl-4,6-)
Certified	Yes	NJ	WPP06.03480	NPW	Extract, GC/MS	[EPA 625] [SM 6410 B]	Nitrophenol (2-)
Certified	Yes	NJ	WPP06.03490	NPW	Extract, GC/MS	[EPA 625] [SM 6410 B]	Nitrophenol (4-)
Certified	Yes	NJ	WPP06.03500	NPW	Extract, GC/MS	[EPA 625] [SM 6410 B]	Pentachlorophenol
Certified	Yes	NJ	WPP06.03510	NPW	Extract, GC/MS	[EPA 625] [SM 6410 B]	Phenol
Applied	No	NJ	WPP06.03512	NPW	Extract, GC/MS	[EPA 625] [SM 6410 B]	Tetrachlorophenol (2,3,4,6-)
Certified	Yes	NJ	WPP06.03518	NPW	Extract, GC/MS	[EPA 625]	Trichlorophenol (2,4,5-)
Certified	Yes	NJ	WPP06.03520	NPW	Extract, GC/MS	[EPA 625] [SM 6410 B]	Trichlorophenol (2,4,6-)
Certified	Yes	NJ	WPP06.03530	NPW	Extract, GC/MS	[EPA 625] [SM 6410 B]	Benzoic acid
Certified	Yes	NJ	WPP06.03540	NPW	Extract, GC/MS	[SM 6410 B] [EPA 625]	Methylphenol (4-)
Certified	Yes	NJ	WPP06.03550	NPW	Extract, GC/MS	[EPA 625] [SM 6410 B]	Acetophenone
Certified	Yes	NJ	WPP06.03560	NPW	Extract, GC/MS	[EPA 625] [SM 6410 B]	Alpha - terpineol
Certified	Yes	NJ	WPP06.03570	NPW	Extract, GC/MS	[EPA 625] [SM 6410 B]	Aniline
Certified	Yes	NJ	WPP06.03580	NPW	Extract, GC/MS	[EPA 625] [SM 6410 B]	Benzidine
Certified	Yes	NJ	WPP06.03590	NPW	Extract, GC/MS	[EPA 625] [SM 6410 B]	Carbazole
Certified	Yes	NJ	WPP06.03600	NPW	Extract, GC/MS	[EPA 625] [SM 6410 B]	Dichloroaniline (2,3-)
Certified	Yes	NJ	WPP06.03605	NPW	Extract, GC/MS	[EPA 625]	Diphenylhydrazine (1,2-)
Certified	Yes	NJ	WPP06.03610	NPW	Extract, GC/MS	[EPA 625] [SM 6410 B]	Methylphenol (2-)
Certified	Yes	NJ	WPP06.03620	NPW	Extract, GC/MS	[EPA 625] [SM 6410 B]	Decane (n-)
Certified	Yes	NJ	WPP06.03660	NPW	Extract, GC/MS	[EPA 625] [SM 6410 B]	Hexachlorocyclopentadiene
Certified	Yes	NJ	WPP06.03675	NPW	Extract, GC/MS	[EPA 625]	N-Nitroso-di-n-butylamine
Certified	Yes	NJ	WPP06.03677	NPW	Extract, GC/MS	[EPA 625]	N-Nitrosodiethylamine
Certified	Yes	NJ	WPP06.03680	NPW	Extract, GC/MS	[EPA 625] [SM 6410 B]	N-Nitrosodimethylamine
Certified	Yes	NJ	WPP06.03690	NPW	Extract, GC/MS	[EPA 625] [SM 6410 B]	N-Nitrosodiphenylamine
Certified	Yes	NJ	WPP06.03695	NPW	Extract, GC/MS	[EPA 625]	N-Nitrosopyrrolidine
Certified	Yes	NJ	WPP06.03700	NPW	Extract, GC/MS	[EPA 625] [SM 6410 B]	Octadecane (n-)
Certified	Yes	NJ	WPP06.03705	NPW	Extract, GC/MS	[EPA 625] [SM 6410 B]	Pentachloroethane
Certified	Yes	NJ	WPP06.03720	NPW	Extract, GC/MS	[EPA 625] [SM 6410 B]	Pyridine

KEY: AE = Air and Emissions, BT = Biological Tissues, DW = Drinking Water, NPW = Non-Potable Water, SCM = Solid and Chemical Materials

New Jersey Department of Environmental Protection

National Environmental Laboratory Accreditation Program

ANNUAL CERTIFIED PARAMETER LIST AND CURRENT STATUS

Effective as of 07/01/2011 until 06/30/2012

Laboratory Name: ENVIRONMENTAL SCIENCE CORPORATION Laboratory Number: TN002 Activity ID: NLC110001
12065 LEBANON RD
MT. JULIET, TN 37122

Category: WPP06 – Organic Parameters, Chromatography/MS

Status	Eligible to Report NJ Data	State	Code	Matrix	Technique Description	Approved Method	Parameter Description
Certified	Yes	NJ	WPP06.03790	NPW	Extract, GC/MS	[EPA 625] [SM 6410 B]	Napthoquinone (1,4-)

Category: WPP07 – Organic Parameters, Individual Pesticide

Status	Eligible to Report NJ Data	State	Code	Matrix	Technique Description	Approved Method	Parameter Description
Certified	Yes	NJ	WPP07.00180	NPW	GC	[EPA 507]	Alachlor
Certified	Yes	NJ	WPP07.07000	NPW	Extraction, GC, NPD or FPD	[USER DEFINED EPA 1657]	Azinphos methyl
Certified	Yes	NJ	WPP07.16150	NPW	GC	[EPA 1657 or 622]	Bolstar
Certified	Yes	NJ	WPP07.22180	NPW	GC	[EPA 1657, 508, or 622]	Chloropyrifos
Certified	Yes	NJ	WPP07.22190	NPW	Extraction, GC, FPD	[EPA 622] [EPA 1657]	Coumaphos
Certified	Yes	NJ	WPP07.23000	NPW	GC	[SM 6640 B]	D (2,4-)
Certified	Yes	NJ	WPP07.23100	NPW	GC	[EPA 515.5, 515.2, 615, 1658 or 555]	DB (2,4-)
Certified	Yes	NJ	WPP07.29050	NPW	Micro -L/L Extraction, GC, ECD	[SM 6640B]	Dalapon
Certified	Yes	NJ	WPP07.29051	NPW	Extraction, GC, ECD or HSD	[EPA 1658]	Dalapon
Certified	Yes	NJ	WPP07.30000	NPW	Extraction, GC, NPD or FPD	[EPA 622] [USER DEFINED EPA 1657]	Demeton (o-)
Certified	Yes	NJ	WPP07.31000	NPW	Extraction, GC, NPD or FPD	[EPA 622] [USER DEFINED EPA 1657]	Demeton (s-)
Certified	Yes	NJ	WPP07.32000	NPW	GC	[USER DEFINED EPA 1657]	Diazinon
Certified	Yes	NJ	WPP07.33000	NPW	GC	[EPA 615] [USER DEFINED SM 6640B 18/19th ED]	Dicamba
Certified	Yes	NJ	WPP07.35050	NPW	Extraction, GC, ECD or HSD	[EPA 1658]	Dichlorprop
Certified	Yes	NJ	WPP07.35100	NPW	GC	[EPA 1657, 507, or 622]	Dichlorvos
Certified	Yes	NJ	WPP07.38100	NPW	Extraction, GC, FPD	[EPA 622] [EPA 1657]	Dimethoate
Certified	Yes	NJ	WPP07.38200	NPW	GC	[EPA 515.5, 515.2, 1658, or 615] [USER DEFINED SM 6640B]	Dinoseb
Certified	Yes	NJ	WPP07.40000	NPW	GC	[USER DEFINED EPA 1657]	Disulfoton
Certified	Yes	NJ	WPP07.50100	NPW	Extraction, GC, FPD	[EPA 1657]	EPN
Certified	Yes	NJ	WPP07.51200	NPW	GC	[EPA 507, 1657 or 622]	Ethoprop
Certified	Yes	NJ	WPP07.51260	NPW	Liquid-Liquid Extraction/GC Method II	[SM 6630 C]	Etridiazole
Certified	Yes	NJ	WPP07.51500	NPW	GC	[EPA 1657 or 622]	Fensulfothion
Certified	Yes	NJ	WPP07.51600	NPW	GC	[EPA 1657 or 622]	Fenthion
Certified	Yes	NJ	WPP07.60000	NPW	GC	[USER DEFINED EPA 1657]	Malathion

KEY: AE = Air and Emissions, BT = Biological Tissues, DW = Drinking Water, NPW = Non-Potable Water, SCM = Solid and Chemical Materials

Laboratory Name: ENVIRONMENTAL SCIENCE CORPORATION Laboratory Number: TN002 Activity ID: NLC110001
12065 LEBANON RD
MT. JULIET, TN 37122

Category: WPP07 -- Organic Parameters, Individual Pesticide

Status	Eligible to Report NJ Data	State	Code	Matrix	Technique Description	Approved Method	Parameter Description
Certified	Yes	NJ	WPP07.60200	NPW	GC	[EPA 555, 1658, or 615]	MCPA
Certified	Yes	NJ	WPP07.60210	NPW	GC	[EPA 555, 1658, or 615]	MCPP
Certified	Yes	NJ	WPP07.60270	NPW	GC	[EPA 507, 1657, or 622]	Merphos
Certified	Yes	NJ	WPP07.60500	NPW	GC	[EPA 507]	Metribuzin
Certified	Yes	NJ	WPP07.60550	NPW	GC	[EPA 507, 1657, or 622]	Mevinphos
Certified	Yes	NJ	WPP07.66200	NPW	GC	[EPA 1657 or 632]	Naled
Certified	Yes	NJ	WPP07.67900	NPW	GC	[EPA 1657 or 614] [EPA 622]	Parathion
Certified	Yes	NJ	WPP07.68000	NPW	GC	[EPA 622] [USER DEFINED EPA 1657]	Parathion methyl
Certified	Yes	NJ	WPP07.71100	NPW	GC	[EPA 1657 or 622]	Phorate
Certified	Yes	NJ	WPP07.77500	NPW	GC	[EPA 1657]	Ronnel
Certified	Yes	NJ	WPP07.80200	NPW	GC	[EPA 622] [EPA 1657]	Stirofos
Certified	Yes	NJ	WPP07.81100	NPW	Extraction, GC, FPD	[EPA 622] [EPA 1657]	Sulfotepp
Certified	Yes	NJ	WPP07.83000	NPW	GC	[SM 6640 B]	T (2,4,5-)
Certified	Yes	NJ	WPP07.83150	NPW	Extraction, GC, FPD	[EPA 622] [EPA 1657]	TEPP
Certified	Yes	NJ	WPP07.84000	NPW	GC	[SM 6640 B]	TP (2,4,5-) (Silvex)
Certified	Yes	NJ	WPP07.84400	NPW	Extraction, GC, FPD	[EPA 622] [EPA 1657]	Tokuthion [Protothiofos]
Certified	Yes	NJ	WPP07.86750	NPW	Extraction, GC, FPD	[EPA 1657] [EPA 622]	Trichloronate
Certified	Yes	NJ	WPP07.87000	NPW	GC	[SM 6630 B]	Trifluralin

Category: WPP08 -- Acute Toxicity Parameters

Status	Eligible to Report NJ Data	State	Code	Matrix	Technique Description	Approved Method	Parameter Description
Certified	Yes	NJ	WPP08.01020	NPW	Ceriodaphnia Mortality	[EPA 2002.0]	Toxicity - acute, FW organism
Certified	Yes	NJ	WPP08.01030	NPW	Fathead Minnow (FHM) Mortality	[EPA 2000.0]	Toxicity - acute, FW organism
Certified	Yes	NJ	WPP08.02010	NPW	FHM Larval Survival & Growth	[EPA 1000.0]	Toxicity - chronic, FW organism
Certified	Yes	NJ	WPP08.02030	NPW	Ceriodaphnia Survival & Reproduction	[EPA 1002.0]	Toxicity - chronic, FW organism

KEY: AE = Air and Emissions, BT = Biological Tissues, DW = Drinking Water, NPW = Non-Potable Water, SCM = Solid and Chemical Materials

New Jersey Department of Environmental Protection

National Environmental Laboratory Accreditation Program

ANNUAL CERTIFIED PARAMETER LIST AND CURRENT STATUS

Effective as of 07/01/2011 until 06/30/2012

Laboratory Name: ENVIRONMENTAL SCIENCE CORPORATION Laboratory Number: TN002 Activity ID: NLC110001
12065 LEBANON RD
MT. JULIET, TN 37122

Category: SHW01 -- Microbiological Parameters

Status	Eligible to Report NJ Data	State	Code	Matrix	Technique Description	Approved Method	Parameter Description
Certified	Yes	NJ	SHW01.03500	NPW, SCM	Membrane Filter	[SM 9222D + EPA 625/R-92/013 Appendix F]	Fecal coliform
Certified	Yes	NJ	SHW01.04500	NPW, SCM	Membrane Filter	[SM 9260D + EPA 625/R-92/013 Appendix F]	Salmonella sp. Bacteria

Category: SHW02 -- Characteristics of Hazardous Waste

Status	Eligible to Report NJ Data	State	Code	Matrix	Technique Description	Approved Method	Parameter Description
Certified	Yes	NJ	SHW02.01000	NPW, SCM	Pensky Martens	[SW-846 1010A] [SW-846 1010] [USER DEFINED ASTM D93]	Ignitability
Certified	Yes	NJ	SHW02.03000	NPW, SCM	Aqueous Waste, Potentiometric	[SW-846 9040B] [SW-846 9040C]	Corrosivity - pH waste, >20% water
Certified	Yes	NJ	SHW02.04000	NPW, SCM	Weight Loss In Acid Media	[SW-846 1110] [SW-846 1110A]	Corrosivity toward steel
Certified	Yes	NJ	SHW02.06900	NPW, SCM	TCLP, Toxicity Procedure, ZHE	[SW-846 1311]	Volatile organics
Certified	Yes	NJ	SHW02.06950	NPW, SCM	TCLP, Toxicity Procedure, Shaker	[SW-846 1311]	Semivolatile organics
Certified	Yes	NJ	SHW02.07000	NPW, SCM	TCLP, Toxicity Procedure, Shaker	[SW-846 1311]	Metals
Applied	No	NJ	SHW02.07100	NPW, SCM	EP Toxicity Test	[SW-846 1310B] [SW-846 1310A]	Metals - organics
Certified	Yes	NJ	SHW02.08000	NPW, SCM	Synthetic PPT Leachate Procedure	[SW-846 1312]	Metals - organics
Applied	No	NJ	SHW02.09000	NPW, SCM	Multiple Extractions	[SW-846 1320]	Metals - organics

Category: SHW03 -- Analyze-Immediately Parameters

Status	Eligible to Report NJ Data	State	Code	Matrix	Technique Description	Approved Method	Parameter Description
Certified	Yes	NJ	SHW03.01000	NPW, SCM	Aqueous, Electrometric	[SW-846 9040B] [SW-846 9040C]	pH

Category: SHW04 -- Inorganic Parameters

Status	Eligible to Report NJ Data	State	Code	Matrix	Technique Description	Approved Method	Parameter Description
Certified	Yes	NJ	SHW04.05000	NPW, SCM	ICP	[SW-846 6010C] [SW-846 6010B]	Aluminum
Certified	Yes	NJ	SHW04.06500	NPW, SCM	ICP	[SW-846 6010C] [SW-846 6010B]	Antimony
Certified	Yes	NJ	SHW04.07000	NPW, SCM	ICP/MS	[SW-846 6020A] [SW-846 6020]	Antimony

KEY: AE = Air and Emissions, BT = Biological Tissues, DW = Drinking Water, NPW = Non-Potable Water, SCM = Solid and Chemical Materials

New Jersey Department of Environmental Protection

National Environmental Laboratory Accreditation Program

ANNUAL CERTIFIED PARAMETER LIST AND CURRENT STATUS

Effective as of 07/01/2011 until 06/30/2012

Laboratory Name: ENVIRONMENTAL SCIENCE CORPORATION Laboratory Number: TN002 Activity ID: NLC110001
12065 LEBANON RD
MT. JULIET, TN 37122

Category: SHW04 – Inorganic Parameters

Status	Eligible to Report NJ Data	State	Code	Matrix	Technique Description	Approved Method	Parameter Description
Certified	Yes	NJ	SHW04.09000	NPW, SCM	ICP	[SW-846 6010C] [SW-846 6010B]	Arsenic
Certified	Yes	NJ	SHW04.09500	NPW, SCM	ICP/MS	[SW-846 6020A] [SW-846 6020]	Arsenic
Certified	Yes	NJ	SHW04.11500	NPW, SCM	ICP	[SW-846 6010C] [SW-846 6010B]	Barium
Certified	Yes	NJ	SHW04.12000	NPW, SCM	ICP/MS	[SW-846 6020A] [SW-846 6020]	Barium
Certified	Yes	NJ	SHW04.13500	NPW, SCM	ICP	[SW-846 6010C] [SW-846 6010B]	Beryllium
Certified	Yes	NJ	SHW04.14000	NPW, SCM	ICP/MS	[SW-846 6020A] [SW-846 6020]	Beryllium
Certified	Yes	NJ	SHW04.15100	NPW, SCM	ICP	[SW-846 6010C] [SW-846 6010B]	Boron
Certified	Yes	NJ	SHW04.15500	NPW, SCM	ICP	[SW-846 6010C] [SW-846 6010B]	Cadmium
Certified	Yes	NJ	SHW04.16000	NPW, SCM	ICP/MS	[SW-846 6020A] [SW-846 6020]	Cadmium
Certified	Yes	NJ	SHW04.17500	NPW, SCM	ICP	[SW-846 6010C] [SW-846 6010B]	Calcium
Certified	Yes	NJ	SHW04.18500	NPW, SCM	ICP	[SW-846 6010C] [SW-846 6010B]	Chromium
Certified	Yes	NJ	SHW04.19000	NPW, SCM	ICP/MS	[SW-846 6020A] [SW-846 6020]	Chromium
Certified	Yes	NJ	SHW04.21000	NPW, SCM	Colorimetric	[SW-846 7196A]	Chromium (VI)
Certified	Yes	NJ	SHW04.22500	NPW, SCM	ICP	[SW-846 6010C] [SW-846 6010B]	Cobalt
Certified	Yes	NJ	SHW04.24500	NPW, SCM	ICP	[SW-846 6010C] [SW-846 6010B]	Copper
Certified	Yes	NJ	SHW04.25000	NPW, SCM	ICP/MS	[SW-846 6020A] [SW-846 6020]	Copper
Certified	Yes	NJ	SHW04.26000	NPW, SCM	ICP	[SW-846 6010C] [SW-846 6010B]	Iron
Certified	Yes	NJ	SHW04.27500	NPW, SCM	ICP	[SW-846 6010C] [SW-846 6010B]	Lead
Certified	Yes	NJ	SHW04.28000	NPW, SCM	ICP/MS	[SW-846 6020A] [SW-846 6020]	Lead
Certified	Yes	NJ	SHW04.29500	NPW, SCM	ICP	[SW-846 6010C] [SW-846 6010B]	Lithium
Certified	Yes	NJ	SHW04.30500	NPW, SCM	ICP	[SW-846 6010C] [SW-846 6010B]	Magnesium
Certified	Yes	NJ	SHW04.31500	NPW, SCM	ICP	[SW-846 6010C] [SW-846 6010B]	Manganese
Certified	Yes	NJ	SHW04.31600	NPW, SCM	ICP/MS	[SW-846 6020A] [SW-846 6020]	Manganese
Certified	Yes	NJ	SHW04.33000	NPW, SCM	AA, Manual Cold Vapor	[SW-846 7470A]	Mercury - liquid waste
Certified	Yes	NJ	SHW04.34000	NPW, SCM	ICP	[SW-846 6010C] [SW-846 6010B]	Molybdenum
Certified	Yes	NJ	SHW04.34005	NPW, SCM	ICP/MS	[SW-846 6020A] [SW-846 6020]	Molybdenum
Certified	Yes	NJ	SHW04.35500	NPW, SCM	ICP	[SW-846 6010C] [SW-846 6010B]	Nickel
Certified	Yes	NJ	SHW04.36000	NPW, SCM	ICP/MS	[SW-846 6020A] [SW-846 6020]	Nickel
Certified	Yes	NJ	SHW04.38000	NPW, SCM	ICP	[SW-846 6010C] [SW-846 6010B]	Potassium
Certified	Yes	NJ	SHW04.39000	NPW, SCM	ICP	[SW-846 6010C] [SW-846 6010B]	Selenium
Certified	Yes	NJ	SHW04.40600	NPW, SCM	ICP/MS	[SW-846 6020A] [SW-846 6020]	Selenium
Certified	Yes	NJ	SHW04.41000	NPW, SCM	ICP	[SW-846 6010C] [SW-846 6010B]	Silver

KEY: AE = Air and Emissions, BT = Biological Tissues, DW = Drinking Water, NPW = Non-Potable Water, SCM = Solid and Chemical Materials

ANNUAL CERTIFIED PARAMETER LIST AND CURRENT STATUS

Effective as of 07/01/2011 until 06/30/2012

Laboratory Name: ENVIRONMENTAL SCIENCE CORPORATION Laboratory Number: TN002 Activity ID: NLC110001
12065 LEBANON RD
MT. JULIET, TN 37122

Category: SHW04 – Inorganic Parameters

Status	Eligible to Report NJ Data	State	Code	Matrix	Technique Description	Approved Method	Parameter Description
Certified	Yes	NJ	SHW04.41500	NPW, SCM	ICP/MS	[SW-846 6020A] [SW-846 6020]	Silver
Certified	Yes	NJ	SHW04.43000	NPW, SCM	ICP	[SW-846 6010C] [SW-846 6010B]	Sodium
Certified	Yes	NJ	SHW04.44000	NPW, SCM	ICP	[SW-846 6010B] [SW-846 6010C]	Strontium
Certified	Yes	NJ	SHW04.45000	NPW, SCM	ICP	[SW-846 6010C] [SW-846 6010B]	Thallium
Certified	Yes	NJ	SHW04.45500	NPW, SCM	ICP/MS	[SW-846 6020A] [SW-846 6020]	Thallium
Certified	Yes	NJ	SHW04.47100	NPW, SCM	ICP	[SW-846 6010C] [SW-846 6010B]	Tin
Certified	Yes	NJ	SHW04.47105	NPW, SCM	ICP/MS	[SW-846 6020] [SW-846 6020A]	Tin
Certified	Yes	NJ	SHW04.47145	NPW, SCM	ICP	[SW-846 6010B] [SW-846 6010C]	Titanium
Certified	Yes	NJ	SHW04.47500	NPW, SCM	ICP	[SW-846 6010C] [SW-846 6010B]	Vanadium
Certified	Yes	NJ	SHW04.47505	NPW, SCM	ICP/MS	[SW-846 6020A] [SW-846 6020]	Vanadium
Certified	Yes	NJ	SHW04.49000	NPW, SCM	ICP	[SW-846 6010C] [SW-846 6010B]	Zinc
Certified	Yes	NJ	SHW04.49500	NPW, SCM	ICP/MS	[SW-846 6020A] [SW-846 6020]	Zinc

Category: SHW06 – Organic Parameters, Chromatography

Status	Eligible to Report NJ Data	State	Code	Matrix	Technique Description	Approved Method	Parameter Description
Certified	Yes	NJ	SHW06.02010	NPW, SCM	Microextraction, GC, ECD	[SW-846 8011]	Dibromoethane (1,2-) (EDB)
Certified	Yes	NJ	SHW06.02020	NPW, SCM	Microextraction, GC, ECD	[SW-846 8011]	Dibromo-3-chloropropane (1,2-)
Certified	Yes	NJ	SHW06.03180	NPW, SCM	GC, Direct Injection or P & T, FID	[SW-846 8015D] [SW-846 8015B]	Methyl alcohol (Methanol)
Certified	Yes	NJ	SHW06.03778	NPW, SCM	GC, Direct Injection or P & T, FID	[SW-846 8015D] [SW-846 8015B]	Ethyl alcohol
Certified	Yes	NJ	SHW06.04010	NPW, SCM	GC P&T, FID	[USER DEFINED MA-DEP-VPH, WI GRO, NW TPH Gx] [SW-846 8015D] [SW-846 8015B]	Gasoline range organic
Certified	Yes	NJ	SHW06.04500	NPW, SCM	Extraction, GC, FID	[USER DEFINED MA-DEP-EPH, TN-EPH, WI DRO, NW TPH Dx] [SW-846 8015D] [SW-846 8015B]	Diesel range organic
Certified	Yes	NJ	SHW06.04511	NPW, SCM	Extraction, GC, FID	[OTHER FL - PRO] [USER DEFINED TX 1005, TX 1006, CT ETPH, NW TPH ID]	Petroleum Organics
Certified	Yes	NJ	SHW06.04512	NPW, SCM	GC P&T, FID	[OTHER IA - OA-1]	Petroleum Organics
Certified	Yes	NJ	SHW06.04513	NPW, SCM	Extraction, GC, FID	[OTHER IA - OA-2]	Petroleum Organics
Certified	No	NJ	SHW06.04514	NPW, SCM	Extraction, GC, FID	[USER DEFINED CA LUFT - diesel]	Petroleum Organics
Applied	No	NJ	SHW06.04520	NPW, SCM	Extraction, GC, FID	[OTHER NJ-OQA-QAM-025, Rev. 7]	Petroleum Organics
Certified	Yes	NJ	SHW06.05010	NPW, SCM	GC, Direct Injection or P & T, PID-HECD	[SW-846 8021B]	Benzene

KEY: AE = Air and Emissions, BT = Biological Tissues, DW = Drinking Water, NPW = Non-Potable Water, SCM = Solid and Chemical Materials

New Jersey Department of Environmental Protection

National Environmental Laboratory Accreditation Program

ANNUAL CERTIFIED PARAMETER LIST AND CURRENT STATUS

Effective as of 07/01/2011 until 06/30/2012

Laboratory Name: ENVIRONMENTAL SCIENCE CORPORATION Laboratory Number: TN002 Activity ID: NLC110001
12065 LEBANON RD
MT. JULIET, TN 37122

Category: SHW06 – Organic Parameters, Chromatography

Status	Eligible to Report NJ Data	State	Code	Matrix	Technique Description	Approved Method	Parameter Description
Certified	Yes	NJ	SHW06.05060	NPW, SCM	GC, Direct Injection or P & T, PID-HECD	[SW-846 8021B]	Ethylbenzene
Certified	Yes	NJ	SHW06.05070	NPW, SCM	GC, Direct Injection or P & T, PID-HECD	[SW-846 8021B]	Toluene
Certified	Yes	NJ	SHW06.05080	NPW, SCM	GC, Direct Injection or P & T, PID-HECD	[SW-846 8021B]	Xylene (o-)
Certified	Yes	NJ	SHW06.05090	NPW, SCM	GC, Direct Injection or P & T, PID-HECD	[SW-846 8021B]	Xylene (m-)
Certified	Yes	NJ	SHW06.05100	NPW, SCM	GC, Direct Injection or P & T, PID-HECD	[SW-846 8021B]	Xylene (p-)
Certified	Yes	NJ	SHW06.05105	NPW, SCM	GC, Direct Injection or P & T, PID-HECD	[SW-846 8021B]	Xylenes (total)
Certified	Yes	NJ	SHW06.05360	NPW, SCM	GC, Direct Injection or P & T, PID-HECD	[SW-846 8021B]	Methyl tert-butyl ether
Certified	Yes	NJ	SHW06.12005	NPW, SCM	GC, Extraction, ECD or HECD, Capillary	[SW-846 8081B] [SW-846 8081A]	Alachlor
Certified	Yes	NJ	SHW06.12010	NPW, SCM	GC, Extraction, ECD or HECD, Capillary	[SW-846 8081B] [SW-846 8081A]	Aldrin
Certified	Yes	NJ	SHW06.12020	NPW, SCM	GC, Extraction, ECD or HECD, Capillary	[SW-846 8081B] [SW-846 8081A]	Alpha BHC
Certified	Yes	NJ	SHW06.12030	NPW, SCM	GC, Extraction, ECD or HECD, Capillary	[SW-846 8081B] [SW-846 8081A]	Beta BHC
Certified	Yes	NJ	SHW06.12040	NPW, SCM	GC, Extraction, ECD or HECD, Capillary	[SW-846 8081B] [SW-846 8081A]	Delta BHC
Certified	Yes	NJ	SHW06.12050	NPW, SCM	GC, Extraction, ECD or HECD, Capillary	[SW-846 8081B] [SW-846 8081A]	Lindane (gamma BHC)
Certified	Yes	NJ	SHW06.12060	NPW, SCM	GC, Extraction, ECD or HECD, Capillary	[SW-846 8081B] [SW-846 8081A]	Chlordane (technical)
Certified	Yes	NJ	SHW06.12070	NPW, SCM	GC, Extraction, ECD or HECD, Capillary	[SW-846 8081B] [SW-846 8081A]	Chlordane (alpha)
Certified	Yes	NJ	SHW06.12080	NPW, SCM	GC, Extraction, ECD or HECD, Capillary	[SW-846 8081B] [SW-846 8081A]	Chlordane (gamma)
Certified	Yes	NJ	SHW06.12082	NPW, SCM	GC, Extraction, ECD or HECD, Capillary	[SW-846 8081B] [SW-846 8081A]	Chloroneb
Certified	Yes	NJ	SHW06.12083	NPW, SCM	GC, Extraction, ECD or HECD, Capillary	[SW-846 8081B] [SW-846 8081A]	Chlorothalonil
Certified	Yes	NJ	SHW06.12090	NPW, SCM	GC, Extraction, ECD or HECD, Capillary	[SW-846 8081B] [SW-846 8081A]	DDD (4,4'-)
Certified	Yes	NJ	SHW06.12100	NPW, SCM	GC, Extraction, ECD or HECD, Capillary	[SW-846 8081B] [SW-846 8081A]	DDE (4,4'-)
Certified	Yes	NJ	SHW06.12110	NPW, SCM	GC, Extraction, ECD or HECD, Capillary	[SW-846 8081B] [SW-846 8081A]	DDT (4,4'-)
Certified	Yes	NJ	SHW06.12120	NPW, SCM	GC, Extraction, ECD or HECD, Capillary	[SW-846 8081B] [SW-846 8081A]	Dieldrin
Certified	Yes	NJ	SHW06.12130	NPW, SCM	GC, Extraction, ECD or HECD, Capillary	[SW-846 8081B] [SW-846 8081A]	Endosulfan I
Certified	Yes	NJ	SHW06.12140	NPW, SCM	GC, Extraction, ECD or HECD, Capillary	[SW-846 8081B] [SW-846 8081A]	Endosulfan II
Certified	Yes	NJ	SHW06.12150	NPW, SCM	GC, Extraction, ECD or HECD, Capillary	[SW-846 8081B] [SW-846 8081A]	Endosulfan sulfate
Certified	Yes	NJ	SHW06.12160	NPW, SCM	GC, Extraction, ECD or HECD, Capillary	[SW-846 8081B] [SW-846 8081A]	Endrin
Certified	Yes	NJ	SHW06.12170	NPW, SCM	GC, Extraction, ECD or HECD, Capillary	[SW-846 8081B] [SW-846 8081A]	Endrin aldehyde
Certified	Yes	NJ	SHW06.12180	NPW, SCM	GC, Extraction, ECD or HECD, Capillary	[SW-846 8081B] [SW-846 8081A]	Endrin ketone
Certified	Yes	NJ	SHW06.12181	NPW, SCM	GC, Extraction, ECD or HECD, Capillary	[SW-846 8081B] [SW-846 8081A]	Etridiazole
Certified	Yes	NJ	SHW06.12190	NPW, SCM	GC, Extraction, ECD or HECD, Capillary	[SW-846 8081B] [SW-846 8081A]	Heptachlor
Certified	Yes	NJ	SHW06.12200	NPW, SCM	GC, Extraction, ECD or HECD, Capillary	[SW-846 8081B] [SW-846 8081A]	Heptachlor epoxide
Certified	Yes	NJ	SHW06.12201	NPW, SCM	GC, Extraction, ECD or HECD, Capillary	[SW-846 8081B] [SW-846 8081A]	Hexachlorobenzene

KEY: AE = Air and Emissions, BT = Biological Tissues, DW = Drinking Water, NPW = Non-Potable Water, SCM = Solid and Chemical Materials

ANNUAL CERTIFIED PARAMETER LIST AND CURRENT STATUS

Effective as of 07/01/2011 until 06/30/2012

Laboratory Name: ENVIRONMENTAL SCIENCE CORPORATION Laboratory Number: TN002 Activity ID: NLC110001
12065 LEBANON RD
MT. JULIET, TN 37122

Category: SHW06 – Organic Parameters, Chromatography

Status	Eligible to Report NJ Data	State	Code	Matrix	Technique Description	Approved Method	Parameter Description
Certified	Yes	NJ	SHW06.12202	NPW, SCM	GC, Extraction, ECD or HECD, Capillary	[SW-846 8081B] [SW-846 8081A]	Hexachlorocyclopentadiene
Certified	Yes	NJ	SHW06.12210	NPW, SCM	GC, Extraction, ECD or HECD, Capillary	[SW-846 8081B] [SW-846 8081A]	Methoxychlor
Certified	Yes	NJ	SHW06.12216	NPW, SCM	GC, Extraction, ECD or HECD, Capillary	[SW-846 8081B] [SW-846 8081A]	Permethrin
Certified	Yes	NJ	SHW06.12217	NPW, SCM	GC, Extraction, ECD or HECD, Capillary	[SW-846 8081B] [SW-846 8081A]	Propachlor
Certified	Yes	NJ	SHW06.12220	NPW, SCM	GC, Extraction, ECD or HECD, Capillary	[SW-846 8081B] [SW-846 8081A]	Toxaphene
Certified	Yes	NJ	SHW06.12221	NPW, SCM	GC, Extraction, ECD or HECD, Capillary	[SW-846 8081B] [SW-846 8081A]	Trifluralin
Certified	Yes	NJ	SHW06.13110	NPW, SCM	GC, Extraction, ECD or HECD, Capillary	[SW-846 8082A] [SW-846 8082]	PCB 1016
Certified	Yes	NJ	SHW06.13120	NPW, SCM	GC, Extraction, ECD or HECD, Capillary	[SW-846 8082A] [SW-846 8082]	PCB 1221
Certified	Yes	NJ	SHW06.13130	NPW, SCM	GC, Extraction, ECD or HECD, Capillary	[SW-846 8082A] [SW-846 8082]	PCB 1232
Certified	Yes	NJ	SHW06.13140	NPW, SCM	GC, Extraction, ECD or HECD, Capillary	[SW-846 8082A] [SW-846 8082]	PCB 1242
Certified	Yes	NJ	SHW06.13150	NPW, SCM	GC, Extraction, ECD or HECD, Capillary	[SW-846 8082A] [SW-846 8082]	PCB 1248
Certified	Yes	NJ	SHW06.13160	NPW, SCM	GC, Extraction, ECD or HECD, Capillary	[SW-846 8082A] [SW-846 8082]	PCB 1254
Certified	Yes	NJ	SHW06.13170	NPW, SCM	GC, Extraction, ECD or HECD, Capillary	[SW-846 8082A] [SW-846 8082]	PCB 1260
Certified	Yes	NJ	SHW06.21010	NPW, SCM	GC, Extract or Dir Inj, NPD or FPD,Cap	[SW-846 8141B] [SW-846 8141A]	Azinphos methyl
Certified	Yes	NJ	SHW06.21012	NPW, SCM	GC, Extract or Dir Inj, NPD or FPD,Cap	[SW-846 8141B] [SW-846 8141A]	Bolstar
Certified	Yes	NJ	SHW06.21015	NPW, SCM	GC, Extract or Dir Inj, NPD or FPD,Cap	[SW-846 8141B] [SW-846 8141A]	Chlorpyrifos
Certified	Yes	NJ	SHW06.21017	NPW, SCM	GC, Extract or Dir Inj, NPD or FPD,Cap	[SW-846 8141B] [SW-846 8141A]	Coumaphos
Certified	Yes	NJ	SHW06.21020	NPW, SCM	GC, Extract or Dir Inj, NPD or FPD,Cap	[SW-846 8141B] [SW-846 8141A]	Demeton (o-)
Certified	Yes	NJ	SHW06.21030	NPW, SCM	GC, Extract or Dir Inj, NPD or FPD,Cap	[SW-846 8141B] [SW-846 8141A]	Demeton (s-)
Certified	Yes	NJ	SHW06.21040	NPW, SCM	GC, Extract or Dir Inj, NPD or FPD,Cap	[SW-846 8141B] [SW-846 8141A]	Diazinon
Certified	Yes	NJ	SHW06.21043	NPW, SCM	GC, Extract or Dir Inj, NPD or FPD,Cap	[SW-846 8141B] [SW-846 8141A]	Dichlorvos
Certified	Yes	NJ	SHW06.21047	NPW, SCM	GC, Extract or Dir Inj, NPD or FPD,Cap	[SW-846 8141B] [SW-846 8141A]	Dimethoate
Certified	Yes	NJ	SHW06.21050	NPW, SCM	GC, Extract or Dir Inj, NPD or FPD,Cap	[SW-846 8141B] [SW-846 8141A]	Disulfoton
Certified	Yes	NJ	SHW06.21052	NPW, SCM	GC, Extract or Dir Inj, NPD or FPD,Cap	[SW-846 8141B] [SW-846 8141A]	EPN
Certified	Yes	NJ	SHW06.21054	NPW, SCM	GC, Extract or Dir Inj, NPD or FPD,Cap	[SW-846 8141B] [SW-846 8141A]	Ethoprop
Certified	Yes	NJ	SHW06.21056	NPW, SCM	GC, Extract or Dir Inj, NPD or FPD,Cap	[SW-846 8141B] [SW-846 8141A]	Fensulfothion
Certified	Yes	NJ	SHW06.21058	NPW, SCM	GC, Extract or Dir Inj, NPD or FPD,Cap	[SW-846 8141B] [SW-846 8141A]	Fenthion
Certified	Yes	NJ	SHW06.21060	NPW, SCM	GC, Extract or Dir Inj, NPD or FPD,Cap	[SW-846 8141B] [SW-846 8141A]	Malathion
Certified	Yes	NJ	SHW06.21062	NPW, SCM	GC, Extract or Dir Inj, NPD or FPD,Cap	[SW-846 8141B] [SW-846 8141A]	Merphos
Certified	Yes	NJ	SHW06.21064	NPW, SCM	GC, Extract or Dir Inj, NPD or FPD,Cap	[SW-846 8141B] [SW-846 8141A]	Mevinphos
Certified	Yes	NJ	SHW06.21066	NPW, SCM	GC, Extract or Dir Inj, NPD or FPD,Cap	[SW-846 8141B] [SW-846 8141A]	Naled
Certified	Yes	NJ	SHW06.21070	NPW, SCM	GC, Extract or Dir Inj, NPD or FPD,Cap	[SW-846 8141B] [SW-846 8141A]	Parathion

KEY: AE = Air and Emissions, BT = Biological Tissues, DW = Drinking Water, NPW = Non-Potable Water, SCM = Solid and Chemical Materials

New Jersey Department of Environmental Protection

National Environmental Laboratory Accreditation Program

ANNUAL CERTIFIED PARAMETER LIST AND CURRENT STATUS

Effective as of 07/01/2011 until 06/30/2012

Laboratory Name: ENVIRONMENTAL SCIENCE CORPORATION Laboratory Number: TN002 Activity ID: NLC110001
12065 LEBANON RD
MT. JULIET, TN 37122

Category: SHW06 – Organic Parameters, Chromatography

Status	Eligible to Report NJ Data	State	Code	Matrix	Technique Description	Approved Method	Parameter Description
Certified	Yes	NJ	SHW06.21080	NPW, SCM	GC, Extract or Dir Inj, NPD or FPD,Cap	[SW-846 8141B] [SW-846 8141A]	Parathion methyl
Certified	Yes	NJ	SHW06.21085	NPW, SCM	GC, Extract or Dir Inj, NPD or FPD,Cap	[SW-846 8141B] [SW-846 8141A]	Phorate
Certified	Yes	NJ	SHW06.21090	NPW, SCM	GC, Extract or Dir Inj, NPD or FPD,Cap	[SW-846 8141B] [SW-846 8141A]	Ronnel
Certified	Yes	NJ	SHW06.21095	NPW, SCM	GC, Extract or Dir Inj, NPD or FPD,Cap	[SW-846 8141B] [SW-846 8141A]	Stirofos
Certified	Yes	NJ	SHW06.21098	NPW, SCM	GC, Extract or Dir Inj, NPD or FPD,Cap	[SW-846 8141B] [SW-846 8141A]	Sulfotepp
Certified	Yes	NJ	SHW06.21105	NPW, SCM	GC, Extract or Dir Inj, NPD or FPD,Cap	[SW-846 8141B] [SW-846 8141A]	TEPP
Certified	Yes	NJ	SHW06.21108	NPW, SCM	GC, Extract or Dir Inj, NPD or FPD,Cap	[SW-846 8141B] [SW-846 8141A]	Tokuthion [Protothiofos]
Certified	Yes	NJ	SHW06.21112	NPW, SCM	GC, Extract or Dir Inj, NPD or FPD,Cap	[SW-846 8141B] [SW-846 8141A]	Trichloronate
Certified	Yes	NJ	SHW06.23010	NPW, SCM	GC, Extraction, ECD, Capillary	[SW-846 8151A]	Dalapon
Certified	Yes	NJ	SHW06.23020	NPW, SCM	GC, Extraction, ECD, Capillary	[SW-846 8151A]	Dicamba
Certified	Yes	NJ	SHW06.23021	NPW, SCM	GC, Extraction, ECD, Capillary	[SW-846 8151A]	Dichlorprop
Certified	Yes	NJ	SHW06.23030	NPW, SCM	GC, Extraction, ECD, Capillary	[SW-846 8151A]	Dinoseb
Certified	Yes	NJ	SHW06.23040	NPW, SCM	GC, Extraction, ECD, Capillary	[SW-846 8151A]	D (2,4-)
Certified	Yes	NJ	SHW06.23041	NPW, SCM	GC, Extraction, ECD, Capillary	[SW-846 8151A]	DB (2,4-)
Certified	Yes	NJ	SHW06.23050	NPW, SCM	GC, Extraction, ECD, Capillary	[SW-846 8151A]	T (2,4,5-)
Certified	Yes	NJ	SHW06.23060	NPW, SCM	GC, Extraction, ECD, Capillary	[SW-846 8151A]	TP (2,4,5-) (Silvex)
Certified	Yes	NJ	SHW06.23063	NPW, SCM	GC, Extraction, ECD, Capillary	[SW-846 8151A]	MCPA
Certified	Yes	NJ	SHW06.23064	NPW, SCM	GC, Extraction, ECD, Capillary	[SW-846 8151A]	MCPP
Certified	Yes	NJ	SHW06.24110	NPW, SCM	Extraction, HPLC	[SW-846 8310]	Acenaphthene
Certified	Yes	NJ	SHW06.24120	NPW, SCM	Extraction, HPLC	[SW-846 8310]	Acenaphthylene
Certified	Yes	NJ	SHW06.24130	NPW, SCM	Extraction, HPLC	[SW-846 8310]	Anthracene
Certified	Yes	NJ	SHW06.24140	NPW, SCM	Extraction, HPLC	[SW-846 8310]	Benzo(a)anthracene
Certified	Yes	NJ	SHW06.24150	NPW, SCM	Extraction, HPLC	[SW-846 8310]	Benzo(a)pyrene
Certified	Yes	NJ	SHW06.24160	NPW, SCM	Extraction, HPLC	[SW-846 8310]	Benzo(b)fluoranthene
Certified	Yes	NJ	SHW06.24170	NPW, SCM	Extraction, HPLC	[SW-846 8310]	Benzo(ghi)perylene
Certified	Yes	NJ	SHW06.24180	NPW, SCM	Extraction, HPLC	[SW-846 8310]	Benzo(k)fluoranthene
Certified	Yes	NJ	SHW06.24190	NPW, SCM	Extraction, HPLC	[SW-846 8310]	Chrysene
Certified	Yes	NJ	SHW06.24200	NPW, SCM	Extraction, HPLC	[SW-846 8310]	Dibenzo(a,h)anthracene
Certified	Yes	NJ	SHW06.24210	NPW, SCM	Extraction, HPLC	[SW-846 8310]	Fluoranthene
Certified	Yes	NJ	SHW06.24220	NPW, SCM	Extraction, HPLC	[SW-846 8310]	Fluorene
Certified	Yes	NJ	SHW06.24230	NPW, SCM	Extraction, HPLC	[SW-846 8310]	Indeno(1,2,3-cd)pyrene
Certified	Yes	NJ	SHW06.24240	NPW, SCM	Extraction, HPLC	[SW-846 8310]	Naphthalene

KEY: AE = Air and Emissions, BT = Biological Tissues, DW = Drinking Water, NPW = Non-Potable Water, SCM = Solid and Chemical Materials

Laboratory Name: ENVIRONMENTAL SCIENCE CORPORATION Laboratory Number: TN002 Activity ID: NLC110001
12065 LEBANON RD
MT. JULIET, TN 37122

Category: SHW06 – Organic Parameters, Chromatography

Status	Eligible to Report NJ Data	State	Code	Matrix	Technique Description	Approved Method	Parameter Description
Certified	Yes	NJ	SHW06.24250	NPW, SCM	Extraction, HPLC	[SW-846 8310]	Phenanthrene
Certified	Yes	NJ	SHW06.24260	NPW, SCM	Extraction, HPLC	[SW-846 8310]	Pyrene
Certified	Yes	NJ	SHW06.28010	NPW, SCM	HPLC, UV Detector	[SW-846 8330A] [SW-846 8330]	HMX
Certified	Yes	NJ	SHW06.28020	NPW, SCM	HPLC, UV Detector	[SW-846 8330A] [SW-846 8330]	RDX
Certified	Yes	NJ	SHW06.28030	NPW, SCM	HPLC, UV Detector	[SW-846 8330A] [SW-846 8330]	Trinitrobenzene (1,3,5-)
Certified	Yes	NJ	SHW06.28040	NPW, SCM	HPLC, UV Detector	[SW-846 8330A] [SW-846 8330]	Dinitrobenzene (1,3-)
Certified	Yes	NJ	SHW06.28045	NPW, SCM	HPLC, UV Detector	[SW-846 8330A] [SW-846 8330]	PETN
Certified	Yes	NJ	SHW06.28050	NPW, SCM	HPLC, UV Detector	[SW-846 8330A] [SW-846 8330]	Tetryl
Certified	Yes	NJ	SHW06.28060	NPW, SCM	HPLC, UV Detector	[SW-846 8330A] [SW-846 8330]	Nitrobenzene
Certified	Yes	NJ	SHW06.28070	NPW, SCM	HPLC, UV Detector	[SW-846 8330A] [SW-846 8330]	Trinitrotoluene (2,4,6-)
Certified	Yes	NJ	SHW06.28080	NPW, SCM	HPLC, UV Detector	[SW-846 8330A] [SW-846 8330]	Dinitrotoluene (4-amino-2,6-)
Certified	Yes	NJ	SHW06.28090	NPW, SCM	HPLC, UV Detector	[SW-846 8330A] [SW-846 8330]	Dinitrotoluene (2-amino-4,6-)
Certified	Yes	NJ	SHW06.28100	NPW, SCM	HPLC, UV Detector	[SW-846 8330A] [SW-846 8330]	Dinitrotoluene (2,4-)
Certified	Yes	NJ	SHW06.28110	NPW, SCM	HPLC, UV Detector	[SW-846 8330A] [SW-846 8330]	Dinitrotoluene (2,6-)
Certified	Yes	NJ	SHW06.28120	NPW, SCM	HPLC, UV Detector	[SW-846 8330A] [SW-846 8330]	Nitrotoluene (2-)
Certified	Yes	NJ	SHW06.28130	NPW, SCM	HPLC, UV Detector	[SW-846 8330A] [SW-846 8330]	Nitrotoluene (3-)
Certified	Yes	NJ	SHW06.28140	NPW, SCM	HPLC, UV Detector	[SW-846 8330A] [SW-846 8330]	Nitrotoluene (4-)
Certified	Yes	NJ	SHW06.29100	NPW, SCM	HPLC, UV Detector	[SW-846 8330] [SW-846 8330A]	Nitroglycerine

Category: SHW07 – Organic Parameters, Chromatography/MS

Status	Eligible to Report NJ Data	State	Code	Matrix	Technique Description	Approved Method	Parameter Description
Certified	Yes	NJ	SHW07.04010	NPW, SCM	GC/MS, P & T or Direct Injection, Capillary	[SW-846 8260C] [SW-846 8260B] [USER DEFINED LUFT]	Benzene
Certified	Yes	NJ	SHW07.04011	NPW, SCM	GC/MS, P & T or Direct Injection, Capillary	[SW-846 8260C] [SW-846 8260B]	Bromobenzene
Certified	Yes	NJ	SHW07.04012	NPW, SCM	GC/MS, P & T or Direct Injection, Capillary	[SW-846 8260C] [SW-846 8260B]	Butyl benzene (n-)
Certified	Yes	NJ	SHW07.04013	NPW, SCM	GC/MS, P & T or Direct Injection, Capillary	[SW-846 8260C] [SW-846 8260B]	Sec-butylbenzene
Certified	Yes	NJ	SHW07.04014	NPW, SCM	GC/MS, P & T or Direct Injection, Capillary	[SW-846 8260C] [SW-846 8260B]	Tert-butylbenzene
Certified	Yes	NJ	SHW07.04020	NPW, SCM	GC/MS, P & T or Direct Injection, Capillary	[SW-846 8260C] [SW-846 8260B]	Chlorobenzene
Certified	Yes	NJ	SHW07.04022	NPW, SCM	GC/MS, P & T or Direct Injection, Capillary	[SW-846 8260C] [SW-846 8260B]	Chlorotoluene (2-)
Certified	Yes	NJ	SHW07.04023	NPW, SCM	GC/MS, P & T or Direct Injection, Capillary	[SW-846 8260C] [SW-846 8260B]	Chlorotoluene (4-)

KEY: AE = Air and Emissions, BT = Biological Tissues, DW = Drinking Water, NPW = Non-Potable Water, SCM = Solid and Chemical Materials

New Jersey Department of Environmental Protection

National Environmental Laboratory Accreditation Program

ANNUAL CERTIFIED PARAMETER LIST AND CURRENT STATUS

Effective as of 07/01/2011 until 06/30/2012

Laboratory Name: ENVIRONMENTAL SCIENCE CORPORATION Laboratory Number: TN002 Activity ID: NLC110001
12065 LEBANON RD
MT. JULIET, TN 37122

Category: SHW07 – Organic Parameters, Chromatography/MS

Status	Eligible to Report NJ Data	State	Code	Matrix	Technique Description	Approved Method	Parameter Description
Certified	Yes	NJ	SHW07.04030	NPW, SCM	GC/MS, P & T or Direct Injection, Capillary	[SW-846 8260C] [SW-846 8260B]	Dichlorobenzene (1,2-)
Certified	Yes	NJ	SHW07.04040	NPW, SCM	GC/MS, P & T or Direct Injection, Capillary	[SW-846 8260C] [SW-846 8260B]	Dichlorobenzene (1,3-)
Certified	Yes	NJ	SHW07.04050	NPW, SCM	GC/MS, P & T or Direct Injection, Capillary	[SW-846 8260C] [SW-846 8260B]	Dichlorobenzene (1,4-)
Certified	Yes	NJ	SHW07.04060	NPW, SCM	GC/MS, P & T or Direct Injection, Capillary	[SW-846 8260C] [SW-846 8260B] [USER DEFINED LUFT]	Ethylbenzene
Certified	Yes	NJ	SHW07.04065	NPW, SCM	GC/MS, P & T or Direct Injection, Capillary	[SW-846 8260C] [SW-846 8260B]	Isopropylbenzene
Certified	Yes	NJ	SHW07.04067	NPW, SCM	GC/MS, P & T or Direct Injection, Capillary	[SW-846 8260C] [SW-846 8260B]	Propylbenzene (n-)
Certified	Yes	NJ	SHW07.04070	NPW, SCM	GC/MS, P & T or Direct Injection, Capillary	[SW-846 8260C] [SW-846 8260B] [USER DEFINED LUFT]	Toluene
Certified	Yes	NJ	SHW07.04071	NPW, SCM	GC/MS, P & T or Direct Injection, Capillary	[SW-846 8260C] [SW-846 8260B]	Isopropyltoluene (4-)
Certified	Yes	NJ	SHW07.04072	NPW, SCM	GC/MS, P & T or Direct Injection, Capillary	[SW-846 8260C] [SW-846 8260B]	Trichlorobenzene (1,2,3-)
Certified	Yes	NJ	SHW07.04073	NPW, SCM	GC/MS, P & T or Direct Injection, Capillary	[SW-846 8260C] [SW-846 8260B]	Trimethylbenzene (1,2,4-)
Certified	Yes	NJ	SHW07.04074	NPW, SCM	GC/MS, P & T or Direct Injection, Capillary	[SW-846 8260C] [SW-846 8260B]	Trimethylbenzene (1,3,5-)
Certified	Yes	NJ	SHW07.04075	NPW, SCM	GC/MS, P&T, or Direct Injection, Capillary	[SW-846 8260C] [SW-846 8260B]	Trimethylbenzene (1,2,3-)
Certified	Yes	NJ	SHW07.04080	NPW, SCM	GC/MS, P & T or Direct Injection, Capillary	[SW-846 8260C] [SW-846 8260B] [USER DEFINED LUFT]	Xylenes (total)
Certified	Yes	NJ	SHW07.04081	NPW, SCM	GC/MS, P & T or Direct Injection, Capillary	[SW-846 8260C] [SW-846 8260B] [USER DEFINED LUFT]	Xylene (m-)
Certified	Yes	NJ	SHW07.04082	NPW, SCM	GC/MS, P & T or Direct Injection, Capillary	[SW-846 8260C] [SW-846 8260B] [USER DEFINED LUFT]	Xylene (o-)
Certified	Yes	NJ	SHW07.04083	NPW, SCM	GC/MS, P & T or Direct Injection, Capillary	[SW-846 8260C] [SW-846 8260B] [USER DEFINED LUFT]	Xylene (p-)
Certified	Yes	NJ	SHW07.04087	NPW, SCM	GC/MS, P & T or Direct Injection, Capillary	[SW-846 8260C] [SW-846 8260B]	tert-Amylmethyl ether [TAME]
Certified	Yes	NJ	SHW07.04088	NPW, SCM	GC/MS, P & T or Direct Injection, Capillary	[SW-846 8260C] [SW-846 8260B]	Allyl chloride
Certified	Yes	NJ	SHW07.04089	NPW, SCM	GC/MS, P & T or Direct Injection, Capillary	[SW-846 8260C] [SW-846 8260B]	Bromochloromethane
Certified	Yes	NJ	SHW07.04090	NPW, SCM	GC/MS, P & T or Direct Injection, Capillary	[SW-846 8260C] [SW-846 8260B]	Bromodichloromethane
Certified	Yes	NJ	SHW07.04095	NPW, SCM	GC/MS, P & T or Direct Injection, Capillary	[SW-846 8260C] [SW-846 8260B]	Bromoethane
Certified	Yes	NJ	SHW07.04100	NPW, SCM	GC/MS, P & T or Direct Injection, Capillary	[SW-846 8260C] [SW-846 8260B]	Bromoform
Certified	Yes	NJ	SHW07.04110	NPW, SCM	GC/MS, P & T or Direct Injection, Capillary	[SW-846 8260C] [SW-846 8260B]	Bromomethane
Certified	Yes	NJ	SHW07.04111	NPW, SCM	GC/MS, P&T, or Direct Injection, Capillary	[SW-846 8260C] [SW-846 8260B]	Cyclohexane
Certified	Yes	NJ	SHW07.04112	NPW, SCM	GC/MS, P & T or Direct Injection, Capillary	[SW-846 8260C] [SW-846 8260B]	Cyclohexanone
Certified	Yes	NJ	SHW07.04115	NPW, SCM	GC/MS, P & T or Direct Injection, Capillary	[SW-846 8260C] [SW-846 8260B]	Butadiene (2-chloro-1,3-)
Certified	Yes	NJ	SHW07.04117	NPW, SCM	GC/MS, P & T or Direct Injection, Capillary	[SW-846 8260C] [SW-846 8260B]	Dichloro-2-butene (cis-1,4-)

KEY: AE = Air and Emissions, BT = Biological Tissues, DW = Drinking Water, NPW = Non-Potable Water, SCM = Solid and Chemical Materials

ANNUAL CERTIFIED PARAMETER LIST AND CURRENT STATUS

Effective as of 07/01/2011 until 06/30/2012

Laboratory Name: ENVIRONMENTAL SCIENCE CORPORATION Laboratory Number: TN002 Activity ID: NLC110001
12065 LEBANON RD
MT. JULIET, TN 37122

Category: SHW07 – Organic Parameters, Chromatography/MS

Status	Eligible to Report NJ Data	State	Code	Matrix	Technique Description	Approved Method	Parameter Description
Certified	Yes	NJ	SHW07.04120	NPW, SCM	GC/MS, P & T or Direct Injection, Capillary	[SW-846 8260C] [SW-846 8260B]	Carbon tetrachloride
Certified	Yes	NJ	SHW07.04130	NPW, SCM	GC/MS, P & T or Direct Injection, Capillary	[SW-846 8260C] [SW-846 8260B]	Chloroethane
Certified	Yes	NJ	SHW07.04140	NPW, SCM	GC/MS, P & T or Direct Injection, Capillary	[SW-846 8260C] [SW-846 8260B]	Chloroethyl vinyl ether (2-)
Certified	Yes	NJ	SHW07.04150	NPW, SCM	GC/MS, P & T or Direct Injection, Capillary	[SW-846 8260C] [SW-846 8260B]	Chloroform
Certified	Yes	NJ	SHW07.04160	NPW, SCM	GC/MS, P & T or Direct Injection, Capillary	[SW-846 8260C] [SW-846 8260B]	Chloromethane
Certified	Yes	NJ	SHW07.04165	NPW, SCM	GC/MS, P & T or Direct Injection, Capillary	[SW-846 8260C] [SW-846 8260B]	Diethyl ether (Ethyl ether)
Certified	Yes	NJ	SHW07.04170	NPW, SCM	GC/MS, P & T or Direct Injection, Capillary	[SW-846 8260C] [SW-846 8260B]	Dichloropropene (trans-1,3-)
Certified	Yes	NJ	SHW07.04180	NPW, SCM	GC/MS, P & T or Direct Injection, Capillary	[SW-846 8260C] [SW-846 8260B]	Dibromochloromethane
Certified	Yes	NJ	SHW07.04185	NPW, SCM	GC/MS, P & T or Direct Injection, Capillary	[SW-846 8260C] [SW-846 8260B]	Dibromoethane (1,2-) (EDB)
Certified	Yes	NJ	SHW07.04186	NPW, SCM	GC/MS, P & T or Direct Injection, Capillary	[SW-846 8260C] [SW-846 8260B]	Dibromomethane
Certified	Yes	NJ	SHW07.04187	NPW, SCM	GC/MS, P & T or Direct Injection, Capillary	[SW-846 8260C] [SW-846 8260B]	Dibromo-3-chloropropane (1,2-)
Certified	Yes	NJ	SHW07.04190	NPW, SCM	GC/MS, P & T or Direct Injection, Capillary	[SW-846 8260C] [SW-846 8260B]	Dichlorodifluoromethane
Certified	Yes	NJ	SHW07.04200	NPW, SCM	GC/MS, P & T or Direct Injection, Capillary	[SW-846 8260C] [SW-846 8260B]	Dichloroethane (1,1-)
Certified	Yes	NJ	SHW07.04210	NPW, SCM	GC/MS, P & T or Direct Injection, Capillary	[SW-846 8260C] [SW-846 8260B]	Dichloroethane (1,2-)
Certified	Yes	NJ	SHW07.04220	NPW, SCM	GC/MS, P & T or Direct Injection, Capillary	[SW-846 8260C] [SW-846 8260B]	Dichloroethene (1,1-)
Certified	Yes	NJ	SHW07.04230	NPW, SCM	GC/MS, P & T or Direct Injection, Capillary	[SW-846 8260C] [SW-846 8260B]	Dichloroethene (trans-1,2-)
Certified	Yes	NJ	SHW07.04235	NPW, SCM	GC/MS, P & T or Direct Injection, Capillary	[SW-846 8260C] [SW-846 8260B]	Dichloroethene (cis-1,2-)
Certified	Yes	NJ	SHW07.04240	NPW, SCM	GC/MS, P & T or Direct Injection, Capillary	[SW-846 8260C] [SW-846 8260B]	Dichloropropane (1,2-)
Certified	Yes	NJ	SHW07.04241	NPW, SCM	GC/MS, P & T or Direct Injection, Capillary	[SW-846 8260C] [SW-846 8260B]	Dichloropropane (1,3-)
Certified	Yes	NJ	SHW07.04242	NPW, SCM	GC/MS, P & T or Direct Injection, Capillary	[SW-846 8260C] [SW-846 8260B]	Dichloropropane (2,2-)
Certified	Yes	NJ	SHW07.04249	NPW, SCM	GC/MS, P & T or Direct Injection, Capillary	[SW-846 8260C] [SW-846 8260B]	Dichloropropene (1,1-)
Certified	Yes	NJ	SHW07.04250	NPW, SCM	GC/MS, P & T or Direct Injection, Capillary	[SW-846 8260C] [SW-846 8260B]	Dichloropropene (cis-1,3-)
Certified	Yes	NJ	SHW07.04255	NPW, SCM	GC/MS, P & T or Direct Injection, Capillary	[SW-846 8260C] [SW-846 8260B]	Dichloro-2-butene (trans-1,4-)
Certified	Yes	NJ	SHW07.04257	NPW, SCM	GC/MS, P & T or Direct Injection, Capillary	[SW-846 8260C] [SW-846 8260B]	Diisopropyl Ether [DIPE]
Certified	Yes	NJ	SHW07.04258	NPW, SCM	GC/MS, P&T, or Direct Injection, Capillary	[SW-846 8260C] [SW-846 8260B]	Butanol (1-)
Certified	Yes	NJ	SHW07.04259	NPW, SCM	GC/MS, P & T or Direct Injection, Capillary	[SW-846 8260C] [SW-846 8260B]	Ethanol
Certified	Yes	NJ	SHW07.04260	NPW, SCM	GC/MS, P & T or Direct Injection, Capillary	[SW-846 8260C] [SW-846 8260B]	Methylene chloride (Dichloromethane)
Certified	Yes	NJ	SHW07.04265	NPW, SCM	GC/MS, P&T, or Direct Injection, Capillary	[SW-846 8260C] [SW-846 8260B]	Nitropropane (2-)
Certified	Yes	NJ	SHW07.04270	NPW, SCM	GC/MS, P & T or Direct Injection, Capillary	[SW-846 8260C] [SW-846 8260B]	Tetrachloroethane (1,1,2,2-)
Certified	Yes	NJ	SHW07.04280	NPW, SCM	GC/MS, P & T or Direct Injection, Capillary	[SW-846 8260C] [SW-846 8260B]	Tetrachloroethene
Certified	Yes	NJ	SHW07.04282	NPW, SCM	GC/MS, P & T or Direct Injection, Capillary	[SW-846 8260C] [SW-846 8260B]	Tetrahydrofuran
Certified	Yes	NJ	SHW07.04290	NPW, SCM	GC/MS, P & T or Direct Injection, Capillary	[SW-846 8260C] [SW-846 8260B]	Trichloroethane (1,1,1-)

KEY: AE = Air and Emissions, BT = Biological Tissues, DW = Drinking Water, NPW = Non-Potable Water, SCM = Solid and Chemical Materials

ANNUAL CERTIFIED PARAMETER LIST AND CURRENT STATUS

Effective as of 07/01/2011 until 06/30/2012

Laboratory Name: ENVIRONMENTAL SCIENCE CORPORATION Laboratory Number: TN002 Activity ID: NLC110001
12065 LEBANON RD
MT. JULIET, TN 37122

Category: SHW07 – Organic Parameters, Chromatography/MS

Status	Eligible to Report NJ Data	State	Code	Matrix	Technique Description	Approved Method	Parameter Description
Certified	Yes	NJ	SHW07.04300	NPW, SCM	GC/MS, P & T or Direct Injection, Capillary	[SW-846 8260C] [SW-846 8260B]	Trichloroethane (1,1,2-)
Certified	Yes	NJ	SHW07.04310	NPW, SCM	GC/MS, P & T or Direct Injection, Capillary	[SW-846 8260C] [SW-846 8260B]	Trichloroethene
Certified	Yes	NJ	SHW07.04320	NPW, SCM	GC/MS, P & T or Direct Injection, Capillary	[SW-846 8260C] [SW-846 8260B]	Trichlorofluoromethane
Certified	Yes	NJ	SHW07.04322	NPW, SCM	GC/MS, P & T or Direct Injection, Capillary	[SW-846 8260C] [SW-846 8260B]	Trichloro (1,1,2-) trifluoroethane (1,2,2-)
Certified	Yes	NJ	SHW07.04325	NPW, SCM	GC/MS, P & T or Direct Injection, Capillary	[SW-846 8260C] [SW-846 8260B]	Trichloropropane (1,2,3-)
Certified	Yes	NJ	SHW07.04327	NPW, SCM	GC/MS, P & T or Direct Injection, Capillary	[SW-846 8260C] [SW-846 8260B]	Vinyl acetate
Certified	Yes	NJ	SHW07.04330	NPW, SCM	GC/MS, P & T or Direct Injection, Capillary	[SW-846 8260C] [SW-846 8260B]	Vinyl chloride
Certified	Yes	NJ	SHW07.04340	NPW, SCM	GC/MS, P & T or Direct Injection, Capillary	[SW-846 8260C] [SW-846 8260B]	Acetone
Certified	Yes	NJ	SHW07.04350	NPW, SCM	GC/MS, P & T or Direct Injection, Capillary	[SW-846 8260C] [SW-846 8260B]	Carbon disulfide
Certified	Yes	NJ	SHW07.04358	NPW, SCM	GC/MS, P&T, or Direct Injection, Capillary	[SW-846 8260B] [SW-846 8260C]	Butanol (3,3-Dimethyl-1-)
Certified	Yes	NJ	SHW07.04360	NPW, SCM	GC/MS, P & T or Direct Injection, Capillary	[SW-846 8260C] [SW-846 8260B]	Butanone (2-)
Certified	Yes	NJ	SHW07.04362	NPW, SCM	GC/MS, P&T, or Direct Injection, Capillary	[SW-846 8260C] [SW-846 8260B]	Butyl formate (t-)
Certified	Yes	NJ	SHW07.04364	NPW, SCM	GC/MS, P & T or Direct Injection, Capillary	[SW-846 8260C] [SW-846 8260B]	Ethyl-tert-butyl Ether [ETBE]
Certified	Yes	NJ	SHW07.04365	NPW, SCM	GC/MS, P & T or Direct Injection, Capillary	[SW-846 8260C] [SW-846 8260B]	Ethyl acetate
Certified	Yes	NJ	SHW07.04367	NPW, SCM	GC/MS, P & T or Direct Injection, Capillary	[SW-846 8260C] [SW-846 8260B]	Ethyl methacrylate
Certified	Yes	NJ	SHW07.04370	NPW, SCM	GC/MS, P & T or Direct Injection, Capillary	[SW-846 8260C] [SW-846 8260B]	Hexanone (2-)
Certified	Yes	NJ	SHW07.04371	NPW, SCM	GC/MS, P & T or Direct Injection, Capillary	[SW-846 8260C] [SW-846 8260B]	Methacrylonitrile
Certified	Yes	NJ	SHW07.04372	NPW, SCM	GC/MS, P & T or Direct Injection, Capillary	[SW-846 8260C] [SW-846 8260B]	Methyl acrylate
Certified	Yes	NJ	SHW07.04373	NPW, SCM	GC/MS, P & T or Direct Injection, Capillary	[SW-846 8260C] [SW-846 8260B]	Methyl methacrylate
Certified	Yes	NJ	SHW07.04374	NPW, SCM	GC/MS, P&T, or Direct Injection, Capillary	[SW-846 8260C] [SW-846 8260B]	Methyl acetate
Certified	Yes	NJ	SHW07.04375	NPW, SCM	GC/MS, P & T or Direct Injection, Capillary	[SW-846 8260C] [SW-846 8260B]	Methyl iodide
Certified	Yes	NJ	SHW07.04376	NPW, SCM	GC/MS, P & T or Direct Injection, Capillary	[SW-846 8260C] [SW-846 8260B]	Iso-butyl alcohol
Certified	Yes	NJ	SHW07.04377	NPW, SCM	GC/MS, P & T or Direct Injection, Capillary	[SW-846 8260C] [SW-846 8260B]	Isopropanol
Certified	Yes	NJ	SHW07.04378	NPW, SCM	GC/MS, P & T or Direct Injection, Capillary	[SW-846 8260C] [SW-846 8260B]	N-Nitroso-di-n-butylamine
Certified	Yes	NJ	SHW07.04379	NPW, SCM	GC/MS, P & T or Direct Injection, Capillary	[SW-846 8260C] [SW-846 8260B]	Pentachloroethane
Certified	Yes	NJ	SHW07.04380	NPW, SCM	GC/MS, P & T or Direct Injection, Capillary	[SW-846 8260C] [SW-846 8260B]	Pentanone (4-methyl-2-) (MIBK)
Certified	Yes	NJ	SHW07.04381	NPW, SCM	GC/MS, P&T, or Direct Injection, Capillary	[SW-846 8260C] [SW-846 8260B]	Pentanol (2-Methyl-2-)
Certified	Yes	NJ	SHW07.04385	NPW, SCM	GC/MS, P & T or Direct Injection, Capillary	[SW-846 8260C] [SW-846 8260B]	Propionitrile
Certified	Yes	NJ	SHW07.04390	NPW, SCM	GC/MS, P & T or Direct Injection, Capillary	[SW-846 8260C] [SW-846 8260B] [USER DEFINED LUFT]	Methyl tert-butyl ether
Certified	Yes	NJ	SHW07.04393	NPW, SCM	GC/MS, P&T, or Direct Injection, Capillary	[SW-846 8260C] [SW-846 8260B]	Amyl alcohol (t-)
Certified	Yes	NJ	SHW07.04395	NPW, SCM	GC/MS, P & T or Direct Injection, Capillary	[SW-846 8260C] [SW-846 8260B]	Tert-butyl alcohol

KEY: AE = Air and Emissions, BT = Biological Tissues, DW = Drinking Water, NPW = Non-Potable Water, SCM = Solid and Chemical Materials

New Jersey Department of Environmental Protection

National Environmental Laboratory Accreditation Program

ANNUAL CERTIFIED PARAMETER LIST AND CURRENT STATUS

Effective as of 07/01/2011 until 06/30/2012

Laboratory Name: ENVIRONMENTAL SCIENCE CORPORATION Laboratory Number: TN002 Activity ID: NLC110001
12065 LEBANON RD
MT. JULIET, TN 37122

Category: SHW07 -- Organic Parameters, Chromatography/MS

Status	Eligible to Report NJ Data	State	Code	Matrix	Technique Description	Approved Method	Parameter Description
Certified	Yes	NJ	SHW07.04398	NPW, SCM	GC/MS, P & T or Direct Injection, Capillary	[SW-846 8260C] [SW-846 8260B]	Acetonitrile
Certified	Yes	NJ	SHW07.04400	NPW, SCM	GC/MS, P & T or Direct Injection, Capillary	[SW-846 8260C] [SW-846 8260B]	Acrolein
Certified	Yes	NJ	SHW07.04410	NPW, SCM	GC/MS, P & T or Direct Injection, Capillary	[SW-846 8260C] [SW-846 8260B]	Acrylonitrile
Applied	No	NJ	SHW07.04425	NPW, SCM	GC/MS, P&T, or Direct Injection, Capillary	[SW-846 8260B] [USER DEFINED 8260C]	Hexane (n-)
Certified	Yes	NJ	SHW07.04500	NPW, SCM	GC/MS, P & T or Direct Injection, Capillary	[SW-846 8260C] [SW-846 8260B]	Hexachlorobutadiene (1,3-)
Certified	Yes	NJ	SHW07.04530	NPW, SCM	GC/MS, P & T or Direct Injection, Capillary	[SW-846 8260C] [SW-846 8260B]	Hexachloroethane
Certified	Yes	NJ	SHW07.04535	NPW, SCM	GC/MS, P&T, or Direct Injection, Capillary	[SW-846 8260C] [SW-846 8260B]	Methylcyclohexane
Certified	Yes	NJ	SHW07.04537	NPW, SCM	GC/MS, P & T or Direct Injection, Capillary	[SW-846 8260B] [SW-846 8260C]	Methylnaphthalene (1-)
Certified	Yes	NJ	SHW07.04539	NPW, SCM	GC/MS, P & T or Direct Injection, Capillary	[SW-846 8260B] [SW-846 8260C]	Methylnaphthalene (2-)
Certified	Yes	NJ	SHW07.04540	NPW, SCM	GC/MS, P & T or Direct Injection, Capillary	[SW-846 8260C] [SW-846 8260B]	Naphthalene
Certified	Yes	NJ	SHW07.04545	NPW, SCM	GC/MS, P&T, or Direct Injection, Capillary	[SW-846 8260C] [SW-846 8260B]	Octane (-n)
Certified	Yes	NJ	SHW07.04550	NPW, SCM	GC/MS, P & T or Direct Injection, Capillary	[SW-846 8260C] [SW-846 8260B]	Styrene
Certified	Yes	NJ	SHW07.04560	NPW, SCM	GC/MS, P & T or Direct Injection, Capillary	[SW-846 8260C] [SW-846 8260B]	Tetrachloroethane (1,1,1,2-)
Certified	Yes	NJ	SHW07.04570	NPW, SCM	GC/MS, P & T or Direct Injection, Capillary	[SW-846 8260C] [SW-846 8260B]	Trichlorobenzene (1,2,4-)
Applied	No	NJ	SHW07.04572	NPW, SCM	GC/MS, Extract, or Direct Injection, Capillary	[SW-846 8260B] [SW-846 8260C]	Trimethylpentane (2,2,4-)
Certified	Yes	NJ	SHW07.04590	NPW, SCM	GC/MS, P & T or Direct Injection, Capillary	[SW-846 8260C] [SW-846 8260B]	Dioxane (1,4-)
Applied	No	NJ	SHW07.04595	NPW, SCM	GC/MS, P & T, Capillary Column	[USER DEFINED SW846 8260B & 8260C]	Gasoline range organic
Certified	Yes	NJ	SHW07.04665	NPW, SCM	GC/MS, Extract or Dir Inj, Capillary	[SW-846 8270D] [SW-846 8270C]	Acetophenone
Certified	Yes	NJ	SHW07.04670	NPW, SCM	GC/MS, Extract or Dir Inj, Capillary	[SW-846 8270D] [SW-846 8270C]	Acetylaminofluorene (2-)
Certified	Yes	NJ	SHW07.04675	NPW, SCM	GC/MS, Extract or Dir Inj, Capillary	[SW-846 8270D] [SW-846 8270C]	Aminobiphenyl (4-)
Certified	Yes	NJ	SHW07.04680	NPW, SCM	GC/MS, Extract or Dir Inj, Capillary	[SW-846 8270D] [SW-846 8270C]	Aramite
Certified	Yes	NJ	SHW07.04685	NPW, SCM	GC/MS, Extract or Dir Inj, Capillary	[SW-846 8270D] [SW-846 8270C]	Benzal chloride
Certified	Yes	NJ	SHW07.04690	NPW, SCM	GC/MS, Extract or Dir Inj, Capillary	[SW-846 8270D] [SW-846 8270C]	Benzo(j)fluoranthene
Certified	Yes	NJ	SHW07.04695	NPW, SCM	GC/MS, Extract or Dir Inj, Capillary	[SW-846 8270D] [SW-846 8270C]	Benzotrichloride
Certified	Yes	NJ	SHW07.04700	NPW, SCM	GC/MS, Extract or Dir Inj, Capillary	[SW-846 8270D] [SW-846 8270C]	Benzyl chloride
Applied	No	NJ	SHW07.04702	NPW, SCM	GC/MS, Extract, or Direct Injection, Capillary	[SW-846 8270C] [SW-846 8270D]	Biphenyl (1,1'-)
Certified	Yes	NJ	SHW07.04705	NPW, SCM	GC/MS, Extract or Dir Inj, Capillary	[SW-846 8270D] [SW-846 8270C]	Chlorobenzilate
Certified	Yes	NJ	SHW07.04710	NPW, SCM	GC/MS, Extract or Dir Inj, Capillary	[SW-846 8270D] [SW-846 8270C]	Chloronaphthalene (1-)
Certified	Yes	NJ	SHW07.04715	NPW, SCM	GC/MS, Extract or Dir Inj, Capillary	[SW-846 8270D] [SW-846 8270C]	Diallate (cis)
Certified	Yes	NJ	SHW07.04720	NPW, SCM	GC/MS, Extract or Dir Inj, Capillary	[SW-846 8270D] [SW-846 8270C]	Diallate (trans)
Certified	Yes	NJ	SHW07.04725	NPW, SCM	GC/MS, Extract or Dir Inj, Capillary	[SW-846 8270D] [SW-846 8270C]	Dibenzo(a,e)pyrene
Certified	Yes	NJ	SHW07.04730	NPW, SCM	GC/MS, Extract or Dir Inj, Capillary	[SW-846 8270D] [SW-846 8270C]	Dibenz(a,h)acridine

KEY: AE = Air and Emissions, BT = Biological Tissues, DW = Drinking Water, NPW = Non-Potable Water, SCM = Solid and Chemical Materials

Laboratory Name: ENVIRONMENTAL SCIENCE CORPORATION Laboratory Number: TN002 Activity ID: NLC110001
12065 LEBANON RD
MT. JULIET, TN 37122

Category: SHW07 -- Organic Parameters, Chromatography/MS

Status	Eligible to Report NJ Data	State	Code	Matrix	Technique Description	Approved Method	Parameter Description
Certified	Yes	NJ	SHW07.04735	NPW, SCM	GC/MS, Extract or Dir Inj, Capillary	[SW-846 8270D] [SW-846 8270C]	Dibenzo(a,h)pyrene
Certified	Yes	NJ	SHW07.04740	NPW, SCM	GC/MS, Extract or Dir Inj, Capillary	[SW-846 8270D] [SW-846 8270C]	Dibenz(a,j)acridine
Certified	Yes	NJ	SHW07.04745	NPW, SCM	GC/MS, Extract or Dir Inj, Capillary	[SW-846 8270D] [SW-846 8270C]	Dibenzo(a,i)pyrene
Certified	Yes	NJ	SHW07.04750	NPW, SCM	GC/MS, Extract or Dir Inj, Capillary	[SW-846 8270D] [SW-846 8270C]	Dibenzo(c,g)carbazole (7H-)
Certified	Yes	NJ	SHW07.04755	NPW, SCM	GC/MS, Extract or Dir Inj, Capillary	[SW-846 8270D] [SW-846 8270C]	Dichlorophenol (2,6-)
Certified	Yes	NJ	SHW07.04760	NPW, SCM	GC/MS, Extract or Dir Inj, Capillary	[SW-846 8270D] [SW-846 8270C]	Dimethoate
Certified	Yes	NJ	SHW07.04767	NPW, SCM	GC/MS, Extract or Dir Inj, Capillary	[SW-846 8270D] [SW-846 8270C]	Dimethylaminoazobenzene
Certified	Yes	NJ	SHW07.04770	NPW, SCM	GC/MS, Extract or Dir Inj, Capillary	[SW-846 8270D] [SW-846 8270C]	Dimethylbenz(a)anthracene (7,12-)
Certified	Yes	NJ	SHW07.04775	NPW, SCM	GC/MS, Extract or Dir Inj, Capillary	[SW-846 8270D] [SW-846 8270C]	Dimethyl benzidine (3,3-)
Certified	Yes	NJ	SHW07.04780	NPW, SCM	GC/MS, Extract or Dir Inj, Capillary	[SW-846 8270D] [SW-846 8270C]	Dinitrobenzene (1,3-)
Certified	Yes	NJ	SHW07.04785	NPW, SCM	GC/MS, Extract or Dir Inj, Capillary	[SW-846 8270D] [SW-846 8270C]	Dinoseb
Certified	Yes	NJ	SHW07.04790	NPW, SCM	GC/MS, Extract or Dir Inj, Capillary	[SW-846 8270D] [SW-846 8270C]	Disulfoton
Certified	Yes	NJ	SHW07.04795	NPW, SCM	GC/MS, Extract or Dir Inj, Capillary	[SW-846 8270D] [SW-846 8270C]	Famphur
Certified	Yes	NJ	SHW07.04800	NPW, SCM	GC/MS, Extract or Dir Inj, Capillary	[SW-846 8270D] [SW-846 8270C]	Hexachlorophene
Certified	Yes	NJ	SHW07.04810	NPW, SCM	GC/MS, Extract or Dir Inj, Capillary	[SW-846 8270D] [SW-846 8270C]	Isodrin
Certified	Yes	NJ	SHW07.04815	NPW, SCM	GC/MS, Extract or Dir Inj, Capillary	[SW-846 8270D] [SW-846 8270C]	Isosafrole (cis-)
Certified	Yes	NJ	SHW07.04820	NPW, SCM	GC/MS, Extract or Dir Inj, Capillary	[SW-846 8270D] [SW-846 8270C]	Isosafrole (trans-)
Certified	Yes	NJ	SHW07.04825	NPW, SCM	GC/MS, Extract or Dir Inj, Capillary	[SW-846 8270D] [SW-846 8270C]	Kepone
Certified	Yes	NJ	SHW07.04830	NPW, SCM	GC/MS, Extract or Dir Inj, Capillary	[SW-846 8270D] [SW-846 8270C]	Methanesulfonate (Ethyl-)
Certified	Yes	NJ	SHW07.04835	NPW, SCM	GC/MS, Extract or Dir Inj, Capillary	[SW-846 8270D] [SW-846 8270C]	Methanesulfonate (Methyl-)
Certified	Yes	NJ	SHW07.04840	NPW, SCM	GC/MS, Extract or Dir Inj, Capillary	[SW-846 8270D] [SW-846 8270C]	Methapyrilene
Certified	Yes	NJ	SHW07.04845	NPW, SCM	GC/MS, Extract or Dir Inj, Capillary	[SW-846 8270D] [SW-846 8270C]	Methylcholanthrene (3-)
Certified	Yes	NJ	SHW07.04850	NPW, SCM	GC/MS, Extract or Dir Inj, Capillary	[SW-846 8270D] [SW-846 8270C]	Napthoquinone (1,4-)
Certified	Yes	NJ	SHW07.04855	NPW, SCM	GC/MS, Extract or Dir Inj, Capillary	[SW-846 8270D] [SW-846 8270C]	Napththylamine (1-)
Certified	Yes	NJ	SHW07.04860	NPW, SCM	GC/MS, Extract or Dir Inj, Capillary	[SW-846 8270D] [SW-846 8270C]	Napththylamine (2-)
Certified	Yes	NJ	SHW07.04866	NPW, SCM	GC/MS, Extract or Dir Inj, Capillary	[SW-846 8270C] [SW-846 8270D]	Nitrodiphenylamine (2-)
Certified	Yes	NJ	SHW07.04870	NPW, SCM	GC/MS, Extract or Dir Inj, Capillary	[SW-846 8270D] [SW-846 8270C]	N-Nitroso-di-n-butylamine
Certified	Yes	NJ	SHW07.04875	NPW, SCM	GC/MS, Extract or Dir Inj, Capillary	[SW-846 8270D] [SW-846 8270C]	N-Nitrosomorpholine
Certified	Yes	NJ	SHW07.04880	NPW, SCM	GC/MS, Extract or Dir Inj, Capillary	[SW-846 8270D] [SW-846 8270C]	N-Nitrosopiperidine
Certified	Yes	NJ	SHW07.04885	NPW, SCM	GC/MS, Extract or Dir Inj, Capillary	[SW-846 8270D] [SW-846 8270C]	Parathion
Certified	Yes	NJ	SHW07.04890	NPW, SCM	GC/MS, Extract or Dir Inj, Capillary	[SW-846 8270D] [SW-846 8270C]	Parathion methyl
Certified	Yes	NJ	SHW07.04895	NPW, SCM	GC/MS, Extract or Dir Inj, Capillary	[SW-846 8270D] [SW-846 8270C]	Pentachlorobenzene

KEY: AE = Air and Emissions, BT = Biological Tissues, DW = Drinking Water, NPW = Non-Potable Water, SCM = Solid and Chemical Materials

New Jersey Department of Environmental Protection

National Environmental Laboratory Accreditation Program

ANNUAL CERTIFIED PARAMETER LIST AND CURRENT STATUS

Effective as of 07/01/2011 until 06/30/2012

Laboratory Name: ENVIRONMENTAL SCIENCE CORPORATION Laboratory Number: TN002 Activity ID: NLC110001
12065 LEBANON RD
MT. JULIET, TN 37122

Category: SHW07 -- Organic Parameters, Chromatography/MS

Status	Eligible to Report NJ Data	State	Code	Matrix	Technique Description	Approved Method	Parameter Description
Certified	Yes	NJ	SHW07.04900	NPW, SCM	GC/MS, Extract or Dir Inj, Capillary	[SW-846 8270D] [SW-846 8270C]	Pentachloroethane
Certified	Yes	NJ	SHW07.04905	NPW, SCM	GC/MS, Extract or Dir Inj, Capillary	[SW-846 8270D] [SW-846 8270C]	Pentachloronitrobenzene
Certified	Yes	NJ	SHW07.04910	NPW, SCM	GC/MS, Extract or Dir Inj, Capillary	[SW-846 8270D] [SW-846 8270C]	Phenacetin
Certified	Yes	NJ	SHW07.04915	NPW, SCM	GC/MS, Extract or Dir Inj, Capillary	[SW-846 8270D] [SW-846 8270C]	Phenylenediamine (1,4-)
Certified	Yes	NJ	SHW07.04920	NPW, SCM	GC/MS, Extract or Dir Inj, Capillary	[SW-846 8270D] [SW-846 8270C]	Phenylethylamine (alpha, alpha-Dimethyl)
Certified	Yes	NJ	SHW07.04925	NPW, SCM	GC/MS, Extract or Dir Inj, Capillary	[SW-846 8270D] [SW-846 8270C]	Phorate
Certified	Yes	NJ	SHW07.04930	NPW, SCM	GC/MS, Extract or Dir Inj, Capillary	[SW-846 8270D] [SW-846 8270C]	Phosphorothioate (O,O,O-triethyl)
Certified	Yes	NJ	SHW07.04935	NPW, SCM	GC/MS, Extract or Dir Inj, Capillary	[SW-846 8270D] [SW-846 8270C]	Phosphorothioate (O,O-diethyl-O-2-pyrazinyl) [Thionazin]
Certified	Yes	NJ	SHW07.04940	NPW, SCM	GC/MS, Extract or Dir Inj, Capillary	[SW-846 8270D] [SW-846 8270C]	Picoline (2-)
Certified	Yes	NJ	SHW07.04945	NPW, SCM	GC/MS, Extract or Dir Inj, Capillary	[SW-846 8270D] [SW-846 8270C]	Pronamide
Certified	Yes	NJ	SHW07.04950	NPW, SCM	GC/MS, Extract or Dir Inj, Capillary	[SW-846 8270D] [SW-846 8270C]	Quinoline -1-Oxide (4-Nitro)
Certified	Yes	NJ	SHW07.04955	NPW, SCM	GC/MS, Extract or Dir Inj, Capillary	[SW-846 8270D] [SW-846 8270C]	Safrole
Certified	Yes	NJ	SHW07.04960	NPW, SCM	GC/MS, Extract or Dir Inj, Capillary	[SW-846 8270D] [SW-846 8270C]	Sulfotepp
Certified	Yes	NJ	SHW07.04965	NPW, SCM	GC/MS, Extract or Dir Inj, Capillary	[SW-846 8270D] [SW-846 8270C]	Tetrachlorobenzene (1,2,3,4-)
Certified	Yes	NJ	SHW07.04970	NPW, SCM	GC/MS, Extract or Dir Inj, Capillary	[SW-846 8270D] [SW-846 8270C]	Tetrachlorobenzene (1,2,3,5-)
Certified	Yes	NJ	SHW07.04975	NPW, SCM	GC/MS, Extract or Dir Inj, Capillary	[SW-846 8270D] [SW-846 8270C]	Tetrachlorobenzene (1,2,4,5-)
Certified	Yes	NJ	SHW07.04980	NPW, SCM	GC/MS, Extract or Dir Inj, Capillary	[SW-846 8270D] [SW-846 8270C]	Tetrachlorophenol (2,3,4,6-)
Certified	Yes	NJ	SHW07.04985	NPW, SCM	GC/MS, Extract or Dir Inj, Capillary	[SW-846 8270D] [SW-846 8270C]	Toluidine (2-) (2-Methylaniline)
Certified	Yes	NJ	SHW07.04990	NPW, SCM	GC/MS, Extract or Dir Inj, Capillary	[SW-846 8270D] [SW-846 8270C]	Toluidine (5-nitro-2-)
Certified	Yes	NJ	SHW07.04995	NPW, SCM	GC/MS, Extract or Dir Inj, Capillary	[SW-846 8270D] [SW-846 8270C]	Trinitrobenzene (1,3,5-)
Certified	Yes	NJ	SHW07.05004	NPW, SCM	GC/MS, Extract or Dir Inj, Capillary	[SW-846 8270D] [SW-846 8270C]	N-Nitrosodiethylamine
Certified	Yes	NJ	SHW07.05005	NPW, SCM	GC/MS, Extract or Dir Inj, Capillary	[SW-846 8270D] [SW-846 8270C]	N-Nitrosodimethylamine
Certified	Yes	NJ	SHW07.05006	NPW, SCM	GC/MS, Extract or Dir Inj, Capillary	[SW-846 8270D] [SW-846 8270C]	N-Nitroso-di-n-propylamine
Certified	Yes	NJ	SHW07.05010	NPW, SCM	GC/MS, Extract or Dir Inj, Capillary	[SW-846 8270D] [SW-846 8270C]	N-Nitrosodiphenylamine
Certified	Yes	NJ	SHW07.05011	NPW, SCM	GC/MS, Extract or Dir Inj, Capillary	[SW-846 8270D] [SW-846 8270C]	N-Nitrosomethylethylamine
Certified	Yes	NJ	SHW07.05012	NPW, SCM	GC/MS, Extract or Dir Inj, Capillary	[SW-846 8270D] [SW-846 8270C]	N-Nitrosopyrrolidine
Certified	Yes	NJ	SHW07.05020	NPW, SCM	GC/MS, Extract or Dir Inj, Capillary	[SW-846 8270D] [SW-846 8270C]	Diphenylamine
Certified	Yes	NJ	SHW07.05030	NPW, SCM	GC/MS, Extract or Dir Inj, Capillary	[SW-846 8270D] [SW-846 8270C]	Carbazole
Certified	Yes	NJ	SHW07.05038	NPW, SCM	GC/MS, Extract or Dir Inj, Capillary	[SW-846 8270D] [SW-846 8270C]	Benzidine
Certified	Yes	NJ	SHW07.05040	NPW, SCM	GC/MS, Extract or Dir Inj, Capillary	[SW-846 8270D] [SW-846 8270C]	Dichlorobenzidine (3,3'-)
Certified	Yes	NJ	SHW07.05045	NPW, SCM	GC/MS, Extract or Dir Inj, Capillary	[SW-846 8270D] [SW-846 8270C]	Diphenylhydrazine (1,2-)

KEY: AE = Air and Emissions, BT = Biological Tissues, DW = Drinking Water, NPW = Non-Potable Water, SCM = Solid and Chemical Materials

ANNUAL CERTIFIED PARAMETER LIST AND CURRENT STATUS

Effective as of 07/01/2011 until 06/30/2012

Laboratory Name: ENVIRONMENTAL SCIENCE CORPORATION Laboratory Number: TN002 Activity ID: NLC110001
12065 LEBANON RD
MT. JULIET, TN 37122

Category: SHW07 -- Organic Parameters, Chromatography/MS

Status	Eligible to Report NJ Data	State	Code	Matrix	Technique Description	Approved Method	Parameter Description
Certified	Yes	NJ	SHW07.05048	NPW, SCM	GC/MS, Extract or Dir Inj, Capillary	[SW-846 8270D] [SW-846 8270C]	Aniline
Certified	Yes	NJ	SHW07.05050	NPW, SCM	GC/MS, Extract or Dir Inj, Capillary	[SW-846 8270D] [SW-846 8270C]	Chloraniline (4-)
Certified	Yes	NJ	SHW07.05060	NPW, SCM	GC/MS, Extract or Dir Inj, Capillary	[SW-846 8270D] [SW-846 8270C]	Nitroaniline (2-)
Certified	Yes	NJ	SHW07.05062	NPW, SCM	GC/MS, Extract or Dir Inj, Capillary	[SW-846 8270D] [SW-846 8270C]	Nitroaniline (3-)
Certified	Yes	NJ	SHW07.05063	NPW, SCM	GC/MS, Extract or Dir Inj, Capillary	[SW-846 8270D] [SW-846 8270C]	Nitroaniline (4-)
Certified	Yes	NJ	SHW07.05070	NPW, SCM	GC/MS, Extract or Dir Inj, Capillary	[SW-846 8270D] [SW-846 8270C]	Chloronaphthalene (2-)
Certified	Yes	NJ	SHW07.05080	NPW, SCM	GC/MS, Extract or Dir Inj, Capillary	[SW-846 8270D] [SW-846 8270C]	Hexachlorobenzene
Certified	Yes	NJ	SHW07.05090	NPW, SCM	GC/MS, Extract or Dir Inj, Capillary	[SW-846 8270D] [SW-846 8270C]	Hexachlorobutadiene (1,3-)
Certified	Yes	NJ	SHW07.05100	NPW, SCM	GC/MS, Extract or Dir Inj, Capillary	[SW-846 8270D] [SW-846 8270C]	Hexachlorocyclopentadiene
Certified	Yes	NJ	SHW07.05110	NPW, SCM	GC/MS, Extract or Dir Inj, Capillary	[SW-846 8270D] [SW-846 8270C]	Hexachloroethane
Certified	Yes	NJ	SHW07.05115	NPW, SCM	GC/MS, Extract or Dir Inj, Capillary	[SW-846 8270D] [SW-846 8270C]	Hexachloropropene
Certified	Yes	NJ	SHW07.05120	NPW, SCM	GC/MS, Extract or Dir Inj, Capillary	[SW-846 8270D] [SW-846 8270C]	Trichlorobenzene (1,2,4-)
Certified	Yes	NJ	SHW07.05130	NPW, SCM	GC/MS, Extract or Dir Inj, Capillary	[SW-846 8270D] [SW-846 8270C]	Bis (2-chloroethoxy) methane
Certified	Yes	NJ	SHW07.05132	NPW, SCM	GC/MS, Extract or Dir Inj, Capillary	[SW-846 8270D] [SW-846 8270C]	Bis (2-chloroethyl) ether
Certified	Yes	NJ	SHW07.05140	NPW, SCM	GC/MS, Extract or Dir Inj, Capillary	[SW-846 8270D] [SW-846 8270C]	Bis (2-chloroisopropyl) ether
Certified	Yes	NJ	SHW07.05150	NPW, SCM	GC/MS, Extract or Dir Inj, Capillary	[SW-846 8270D] [SW-846 8270C]	Chlorophenyl-phenyl ether (4-)
Certified	Yes	NJ	SHW07.05160	NPW, SCM	GC/MS, Extract or Dir Inj, Capillary	[SW-846 8270D] [SW-846 8270C]	Bromophenyl-phenyl ether (4-)
Certified	Yes	NJ	SHW07.05170	NPW, SCM	GC/MS, Extract or Dir Inj, Capillary	[SW-846 8270D] [SW-846 8270C]	Dinitrotoluene (2,4-)
Certified	Yes	NJ	SHW07.05180	NPW, SCM	GC/MS, Extract or Dir Inj, Capillary	[SW-846 8270D] [SW-846 8270C]	Dinitrotoluene (2,6-)
Certified	Yes	NJ	SHW07.05190	NPW, SCM	GC/MS, Extract or Dir Inj, Capillary	[SW-846 8270D] [SW-846 8270C]	Isophorone
Certified	Yes	NJ	SHW07.05200	NPW, SCM	GC/MS, Extract or Dir Inj, Capillary	[SW-846 8270D] [SW-846 8270C]	Nitrobenzene
Certified	Yes	NJ	SHW07.05210	NPW, SCM	GC/MS, Extract or Dir Inj, Capillary	[SW-846 8270D] [SW-846 8270C]	Butyl benzyl phthalate
Certified	Yes	NJ	SHW07.05220	NPW, SCM	GC/MS, Extract or Dir Inj, Capillary	[SW-846 8270D] [SW-846 8270C]	Bis (2-ethylhexyl) phthalate
Certified	Yes	NJ	SHW07.05230	NPW, SCM	GC/MS, Extract or Dir Inj, Capillary	[SW-846 8270D] [SW-846 8270C]	Diethyl phthalate
Certified	Yes	NJ	SHW07.05240	NPW, SCM	GC/MS, Extract or Dir Inj, Capillary	[SW-846 8270D] [SW-846 8270C]	Dimethyl phthalate
Certified	Yes	NJ	SHW07.05250	NPW, SCM	GC/MS, Extract or Dir Inj, Capillary	[SW-846 8270D] [SW-846 8270C]	Di-n-butyl phthalate
Certified	Yes	NJ	SHW07.05260	NPW, SCM	GC/MS, Extract or Dir Inj, Capillary	[SW-846 8270D] [SW-846 8270C]	Di-n-octyl phthalate
Certified	Yes	NJ	SHW07.05270	NPW, SCM	GC/MS, Extract or Dir Inj, Capillary	[SW-846 8270D] [SW-846 8270C]	Acenaphthene
Certified	Yes	NJ	SHW07.05280	NPW, SCM	GC/MS, Extract or Dir Inj, Capillary	[SW-846 8270D] [SW-846 8270C]	Anthracene
Certified	Yes	NJ	SHW07.05290	NPW, SCM	GC/MS, Extract or Dir Inj, Capillary	[SW-846 8270D] [SW-846 8270C]	Acenaphthylene
Certified	Yes	NJ	SHW07.05300	NPW, SCM	GC/MS, Extract or Dir Inj, Capillary	[SW-846 8270D] [SW-846 8270C]	Benzo(a)anthracene
Certified	Yes	NJ	SHW07.05310	NPW, SCM	GC/MS, Extract or Dir Inj, Capillary	[SW-846 8270D] [SW-846 8270C]	Benzo(a)pyrene

KEY: AE = Air and Emissions, BT = Biological Tissues, DW = Drinking Water, NPW = Non-Potable Water, SCM = Solid and Chemical Materials

New Jersey Department of Environmental Protection

National Environmental Laboratory Accreditation Program

ANNUAL CERTIFIED PARAMETER LIST AND CURRENT STATUS

Effective as of 07/01/2011 until 06/30/2012

Laboratory Name: ENVIRONMENTAL SCIENCE CORPORATION Laboratory Number: TN002 Activity ID: NLC110001
12065 LEBANON RD
MT. JULIET, TN 37122

Category: SHW07 -- Organic Parameters, Chromatography/MS

Status	Eligible to Report NJ Data	State	Code	Matrix	Technique Description	Approved Method	Parameter Description
Certified	Yes	NJ	SHW07.05320	NPW, SCM	GC/MS, Extract or Dir Inj, Capillary	[SW-846 8270D] [SW-846 8270C]	Benzo(b)fluoranthene
Certified	Yes	NJ	SHW07.05330	NPW, SCM	GC/MS, Extract or Dir Inj, Capillary	[SW-846 8270D] [SW-846 8270C]	Benzo(ghi)perylene
Certified	Yes	NJ	SHW07.05340	NPW, SCM	GC/MS, Extract or Dir Inj, Capillary	[SW-846 8270D] [SW-846 8270C]	Benzo(k)fluoranthene
Certified	Yes	NJ	SHW07.05350	NPW, SCM	GC/MS, Extract or Dir Inj, Capillary	[SW-846 8270D] [SW-846 8270C]	Chrysene
Certified	Yes	NJ	SHW07.05360	NPW, SCM	GC/MS, Extract or Dir Inj, Capillary	[SW-846 8270D] [SW-846 8270C]	Dibenzo(a,h)anthracene
Certified	Yes	NJ	SHW07.05370	NPW, SCM	GC/MS, Extract or Dir Inj, Capillary	[SW-846 8270D] [SW-846 8270C]	Fluoranthene
Certified	Yes	NJ	SHW07.05380	NPW, SCM	GC/MS, Extract or Dir Inj, Capillary	[SW-846 8270D] [SW-846 8270C]	Fluorene
Certified	Yes	NJ	SHW07.05390	NPW, SCM	GC/MS, Extract or Dir Inj, Capillary	[SW-846 8270D] [SW-846 8270C]	Indeno(1,2,3-cd)pyrene
Certified	Yes	NJ	SHW07.05395	NPW, SCM	GC/MS, Extract or Dir Inj, Capillary	[SW-846 8270C] [SW-846 8270D]	Methylnaphthalene (1-)
Certified	Yes	NJ	SHW07.05400	NPW, SCM	GC/MS, Extract or Dir Inj, Capillary	[SW-846 8270D] [SW-846 8270C]	Methylnaphthalene (2-)
Certified	Yes	NJ	SHW07.05410	NPW, SCM	GC/MS, Extract or Dir Inj, Capillary	[SW-846 8270D] [SW-846 8270C]	Naphthalene
Certified	Yes	NJ	SHW07.05420	NPW, SCM	GC/MS, Extract or Dir Inj, Capillary	[SW-846 8270D] [SW-846 8270C]	Phenanthrene
Certified	Yes	NJ	SHW07.05430	NPW, SCM	GC/MS, Extract or Dir Inj, Capillary	[SW-846 8270D] [SW-846 8270C]	Pyrene
Certified	Yes	NJ	SHW07.05440	NPW, SCM	GC/MS, Extract or Dir Inj, Capillary	[SW-846 8270D] [SW-846 8270C]	Methyl phenol (4-chloro-3-)
Certified	Yes	NJ	SHW07.05450	NPW, SCM	GC/MS, Extract or Dir Inj, Capillary	[SW-846 8270D] [SW-846 8270C]	Chlorophenol (2-)
Certified	Yes	NJ	SHW07.05460	NPW, SCM	GC/MS, Extract or Dir Inj, Capillary	[SW-846 8270D] [SW-846 8270C]	Dichlorophenol (2,4-)
Certified	Yes	NJ	SHW07.05470	NPW, SCM	GC/MS, Extract or Dir Inj, Capillary	[SW-846 8270D] [SW-846 8270C]	Dimethylphenol (2,4-)
Certified	Yes	NJ	SHW07.05480	NPW, SCM	GC/MS, Extract or Dir Inj, Capillary	[SW-846 8270D] [SW-846 8270C]	Dinitrophenol (2,4-)
Certified	Yes	NJ	SHW07.05490	NPW, SCM	GC/MS, Extract or Dir Inj, Capillary	[SW-846 8270D] [SW-846 8270C]	Dinitrophenol (2-methyl-4,6-)
Certified	Yes	NJ	SHW07.05500	NPW, SCM	GC/MS, Extract or Dir Inj, Capillary	[SW-846 8270D] [SW-846 8270C]	Methylphenol (2-)
Certified	Yes	NJ	SHW07.05510	NPW, SCM	GC/MS, Extract or Dir Inj, Capillary	[SW-846 8270D] [SW-846 8270C]	Methylphenol (4-)
Certified	Yes	NJ	SHW07.05520	NPW, SCM	GC/MS, Extract or Dir Inj, Capillary	[SW-846 8270D] [SW-846 8270C]	Nitrophenol (2-)
Certified	Yes	NJ	SHW07.05530	NPW, SCM	GC/MS, Extract or Dir Inj, Capillary	[SW-846 8270D] [SW-846 8270C]	Nitrophenol (4-)
Certified	Yes	NJ	SHW07.05540	NPW, SCM	GC/MS, Extract or Dir Inj, Capillary	[SW-846 8270D] [SW-846 8270C]	Pentachlorophenol
Certified	Yes	NJ	SHW07.05550	NPW, SCM	GC/MS, Extract or Dir Inj, Capillary	[SW-846 8270D] [SW-846 8270C]	Phenol
Certified	Yes	NJ	SHW07.05560	NPW, SCM	GC/MS, Extract or Dir Inj, Capillary	[SW-846 8270D] [SW-846 8270C]	Trichlorophenol (2,4,5-)
Certified	Yes	NJ	SHW07.05570	NPW, SCM	GC/MS, Extract or Dir Inj, Capillary	[SW-846 8270D] [SW-846 8270C]	Trichlorophenol (2,4,6-)
Certified	Yes	NJ	SHW07.05600	NPW, SCM	GC/MS, Extract or Dir Inj, Capillary	[SW-846 8270D] [SW-846 8270C]	Dibenzofuran
Certified	Yes	NJ	SHW07.05691	NPW, SCM	GC/MS, Extract or Dir Inj, Capillary	[SW-846 8270D] [SW-846 8270C]	Dichlorobenzene (1,2-)
Certified	Yes	NJ	SHW07.05692	NPW, SCM	GC/MS, Extract or Dir Inj, Capillary	[SW-846 8270D] [SW-846 8270C]	Dichlorobenzene (1,3-)
Certified	Yes	NJ	SHW07.05700	NPW, SCM	GC/MS, Extract or Dir Inj, Capillary	[SW-846 8270D] [SW-846 8270C]	Dichlorobenzene (1,4-)
Applied	No	NJ	SHW07.05705	NPW, SCM	GC/MS, Extract or Dir Inj, Capillary	[SW-846 8270C] [SW-846 8270D]	Benzaldehyde

KEY: AE = Air and Emissions, BT = Biological Tissues, DW = Drinking Water, NPW = Non-Potable Water, SCM = Solid and Chemical Materials

New Jersey Department of Environmental Protection

National Environmental Laboratory Accreditation Program

ANNUAL CERTIFIED PARAMETER LIST AND CURRENT STATUS

Effective as of 07/01/2011 until 06/30/2012

Laboratory Name: ENVIRONMENTAL SCIENCE CORPORATION Laboratory Number: TN002 Activity ID: NLC110001
12065 LEBANON RD
MT. JULIET, TN 37122

Category: SHW07 -- Organic Parameters, Chromatography/MS

Status	Eligible to Report NJ Data	State	Code	Matrix	Technique Description	Approved Method	Parameter Description
Certified	Yes	NJ	SHW07.05710	NPW, SCM	GC/MS, Extract or Dir Inj, Capillary	[SW-846 8270D] [SW-846 8270C]	Benzoic acid
Certified	Yes	NJ	SHW07.05720	NPW, SCM	GC/MS, Extract or Dir Inj, Capillary	[SW-846 8270D] [SW-846 8270C]	Benzyl alcohol
Certified	Yes	NJ	SHW07.05725	NPW, SCM	GC/MS, Extract or Dir Inj, Capillary	[SW-846 8270D] [SW-846 8270C]	Decane (n-)
Certified	Yes	NJ	SHW07.05730	NPW, SCM	GC/MS, Extract or Dir Inj, Capillary	[SW-846 8270D] [SW-846 8270C]	Octadecane (n-)
Certified	No	NJ	SHW07.05745	NPW, SCM	GC/MS, Extract or Dir Inj, Capillary	[USER DEFINED CA LUFT - diesel]	Petroleum Organics
Certified	Yes	NJ	SHW07.05750	NPW, SCM	GC/MS, Extract or Dir Inj, Capillary	[SW-846 8270D] [SW-846 8270C]	Pyridine
Applied	No	NJ	SHW07.05765	NPW, SCM	GC/MS, Extract or Dir Inj, Capillary	[SW-846 8270C] [SW-846 8270D]	Caprolactam
Applied	No	NJ	SHW07.05990	NPW, SCM	GC/MS, Extract or Dir Inj, Capillary	[SW-846 8270C] [SW-846 8270D]	Atrazine
Certified	Yes	NJ	SHW07.07578	NPW, SCM	GC/MS/SIM, Extract or Dir Inj, Capillary	[SW-846 8270C] [SW-846 8270D]	Acenaphthene
Certified	Yes	NJ	SHW07.07580	NPW, SCM	GC/MS/SIM, Extract or Dir Inj, Capillary	[SW-846 8270C] [SW-846 8270D]	Acenaphthylene
Certified	Yes	NJ	SHW07.07582	NPW, SCM	GC/MS/SIM, Extract or Dir Inj, Capillary	[SW-846 8270C] [SW-846 8270D]	Anthracene
Certified	Yes	NJ	SHW07.07584	NPW, SCM	GC/MS/SIM, Extract or Dir Inj, Capillary	[SW-846 8270D] [SW-846 8270C]	Benzo(a)anthracene
Certified	Yes	NJ	SHW07.07586	NPW, SCM	GC/MS/SIM, Extract or Dir Inj, Capillary	[SW-846 8270D] [SW-846 8270C]	Benzo(a)pyrene
Certified	Yes	NJ	SHW07.07588	NPW, SCM	GC/MS/SIM, Extract or Dir Inj, Capillary	[SW-846 8270D] [SW-846 8270C]	Benzo(b)fluoranthene
Certified	Yes	NJ	SHW07.07590	NPW, SCM	GC/MS/SIM, Extract or Dir Inj, Capillary	[SW-846 8270D] [SW-846 8270C]	Benzo(k)fluoranthene
Certified	Yes	NJ	SHW07.07592	NPW, SCM	GC/MS/SIM, Extract or Dir Inj, Capillary	[SW-846 8270C] [SW-846 8270D]	Benzo(ghi)perylene
Certified	Yes	NJ	SHW07.07593	NPW, SCM	GC/MS/SIM, Extract or Dir Inj, Capillary	[SW-846 8270C] [SW-846 8270D]	Chrysene
Certified	Yes	NJ	SHW07.07594	NPW, SCM	GC/MS/SIM, Extract or Dir Inj, Capillary	[SW-846 8270D] [SW-846 8270C]	Dibenzo(a,h)anthracene
Certified	Yes	NJ	SHW07.07598	NPW, SCM	GC/MS/SIM, Extract or Dir Inj, Capillary	[SW-846 8270D] [SW-846 8270C]	Indeno(1,2,3-cd)pyrene
Certified	Yes	NJ	SHW07.07600	NPW, SCM	GC/MS/SIM, Extract or Dir Inj, Capillary	[SW-846 8270C] [SW-846 8270D]	Methylnaphthalene (1-)
Certified	Yes	NJ	SHW07.07602	NPW, SCM	GC/MS/SIM, Extract or Dir Inj, Capillary	[SW-846 8270C] [SW-846 8270D]	Methylnaphthalene (2-)
Certified	Yes	NJ	SHW07.07604	NPW, SCM	GC/MS/SIM, Extract or Dir Inj, Capillary	[SW-846 8270C] [SW-846 8270D]	Naphthalene
Certified	Yes	NJ	SHW07.07610	NPW, SCM	GC/MS/SIM, Extract or Dir Inj, Capillary	[SW-846 8270C] [SW-846 8270D]	Fluoranthene
Certified	Yes	NJ	SHW07.07612	NPW, SCM	GC/MS/SIM, Extract or Dir Inj, Capillary	[SW-846 8270C] [SW-846 8270D]	Fluorene
Certified	Yes	NJ	SHW07.07618	NPW, SCM	GC/MS/SIM, Extract or Dir Inj, Capillary	[SW-846 8270C] [SW-846 8270D]	Phenanthrene
Certified	Yes	NJ	SHW07.07620	NPW, SCM	GC/MS/SIM, Extract or Dir Inj, Capillary	[SW-846 8270C] [SW-846 8270D]	Pyrene

KEY: AE = Air and Emissions, BT = Biological Tissues, DW = Drinking Water, NPW = Non-Potable Water, SCM = Solid and Chemical Materials

New Jersey Department of Environmental Protection

National Environmental Laboratory Accreditation Program

ANNUAL CERTIFIED PARAMETER LIST AND CURRENT STATUS

Effective as of 07/01/2011 until 06/30/2012

Laboratory Name: ENVIRONMENTAL SCIENCE CORPORATION Laboratory Number: TN002 Activity ID: NLC110001
12065 LEBANON RD
MT. JULIET, TN 37122

Category: SHW09 – Miscellaneous Parameters

Status	Eligible to Report NJ Data	State	Code	Matrix	Technique Description	Approved Method	Parameter Description
Certified	Yes	NJ	SHW09.02000	NPW, SCM	Distillation	[SW-846 9010C] [USER DEFINED 9010B]	Cyanide
Certified	Yes	NJ	SHW09.03000	NPW, SCM	Distillation	[SW-846 9010C] [USER DEFINED 9010B]	Cyanide - amenable to Cl2
Certified	Yes	NJ	SHW09.05000	NPW, SCM	Colorimetric, Automated	[SW-846 9012B] [USER DEFINED 9012A]	Cyanide
Certified	Yes	NJ	SHW09.09000	NPW, SCM	Redox Titration	[SW-846 9030B]	Sulfides, acid sol. & insol.
Certified	Yes	NJ	SHW09.10100	NPW, SCM	Titration	[SW-846 9034]	Sulfides, acid sol. & insol.
Certified	Yes	NJ	SHW09.13050	NPW, SCM	Ion Chromatography	[SW-846 9056] [SW-846 9056A]	Sulfate
Certified	Yes	NJ	SHW09.14000	NPW, SCM	Electrometric	[SW-846 9040C]	pH - waste, >20% water
Certified	Yes	NJ	SHW09.19000	NPW, SCM	Infrared Spectrometry or FID	[SW-846 9060A] [SW-846 9060]	Total organic carbon (TOC)
Applied	No	NJ	SHW09.19200	NPW, SCM	Spectroscopy	[ASTM F1647-02A] [OTHER Walkley Black]	Total organic carbon (TOC)
Applied	No	NJ	SHW09.19300	NPW, SCM	Gravimetric	[OTHER USDA-LOI (Loss on ignition)]	Total organic carbon (TOC)
Certified	Yes	NJ	SHW09.29150	NPW, SCM	Ion Chromatography	[SW-846 9056] [SW-846 9056A]	Nitrite
Certified	Yes	NJ	SHW09.30150	NPW, SCM	Ion Chromatography	[SW-846 9056] [SW-846 9056A]	Nitrate
Certified	Yes	NJ	SHW09.30250	NPW, SCM	Ion Chromatography	[SW-846 9056] [SW-846 9056A]	Bromide
Certified	Yes	NJ	SHW09.33100	NPW, SCM	Ion Chromatography	[SW-846 9056] [SW-846 9056A]	Chloride
Certified	Yes	NJ	SHW09.34150	NPW, SCM	Ion Chromatography	[SW-846 9056] [SW-846 9056A]	Fluoride
Applied	No	NJ	SHW09.34160	NPW, SCM	Ion Chromatography		Perchlorate

Category: SHW10 – Facility-Specific Parameters

Status	Eligible to Report NJ Data	State	Code	Matrix	Technique Description	Approved Method	Parameter Description
Certified	Yes	NJ	SHW10.20030	NPW, SCM	Ion Chromatography	[EPA 300.0]	Guanidine nitrate
Certified	Yes	NJ	SHW10.21010	NPW, SCM	HPLC, UV Detector	[USER DEFINED SW-846 8330]	Nitroguanidine
Certified	Yes	NJ	SHW10.21030	NPW, SCM	HPLC, UV Detector	[SW-846 8330]	Guanidine nitrate

Category: WPP02 – Inorg. Parameters, Nutrients and Demands

Status	Eligible to Report NJ Data	State	Code	Matrix	Technique Description	Approved Method	Parameter Description
Certified	Yes	NJ	WPP02.40100	NPW, SCM	Gravimetric, 500 Degrees C	[SM 2540 G]	Total, fixed, and volatile solids (SQAR)

KEY: AE = Air and Emissions, BT = Biological Tissues, DW = Drinking Water, NPW = Non-Potable Water, SCM = Solid and Chemical Materials

New Jersey Department of Environmental Protection

National Environmental Laboratory Accreditation Program

ANNUAL CERTIFIED PARAMETER LIST AND CURRENT STATUS

Effective as of 07/01/2011 until 06/30/2012

Laboratory Name: ENVIRONMENTAL SCIENCE CORPORATION Laboratory Number: TN002 Activity ID: NLC110001
12065 LEBANON RD
MT. JULIET, TN 37122

Category: SHW02 – Characteristics of Hazardous Waste

Status	Eligible to Report NJ Data	State	Code	Matrix	Technique Description	Approved Method	Parameter Description
Certified	Yes	NJ	SHW02.02100	SCM	Burn Rate	[SW-846 1030]	Ignitability of solids

Category: SHW04 – Inorganic Parameters

Status	Eligible to Report NJ Data	State	Code	Matrix	Technique Description	Approved Method	Parameter Description
Certified	Yes	NJ	SHW04.02200	SCM	Acid Digestion For AA or ICP, Oil	[SW-846 3031]	Metals
Certified	Yes	NJ	SHW04.02500	SCM	Dissolution of Oil, Grease & Wax	[SW-846 3040A]	Metals
Certified	Yes	NJ	SHW04.03000	SCM	Acid Digestion, Soil Sediment & Sludge	[SW-846 3050B]	Metals
Certified	Yes	NJ	SHW04.03500	SCM	Microwave Acid Digest: Soil Sediment & Sludge	[SW-846 3051A] [SW-846 3051]	Metals
Certified	Yes	NJ	SHW04.03600	SCM	Microwave Acid Digest - Siliceous & Org Matrix	[SW-846 3052]	Metals
Certified	Yes	NJ	SHW04.03700	SCM	Chromium VI Digestion	[SW-846 3060A]	Metals
Certified	Yes	NJ	SHW04.33500	SCM	AA, Manual Cold Vapor	[SW-846 7471B] [SW-846 7471A]	Mercury - solid waste

Category: SHW05 – Organic Parameters, Prep. / Screening

Status	Eligible to Report NJ Data	State	Code	Matrix	Technique Description	Approved Method	Parameter Description
Certified	Yes	NJ	SHW05.03000	SCM	Soxhlet Extraction	[SW-846 3540C]	Semivolatile organics
Certified	Yes	NJ	SHW05.05000	SCM	Ultrasonic Extraction	[SW-846 3550C] [SW-846 3550B]	Semivolatile organics
Certified	Yes	NJ	SHW05.05110	SCM	Microwave Extraction	[SW-846 3546]	Semivolatile organics
Certified	Yes	NJ	SHW05.06000	SCM	Waste Dilution	[SW-846 3580A]	Organics
Certified	Yes	NJ	SHW05.06100	SCM	Waste Dilution, Volatile organics	[SW-846 3585]	Organics
Certified	Yes	NJ	SHW05.07300	SCM	Closed System Purge & Trap	[SW-846 5035A] [SW-846 5035L]	Volatile organics - low conc
Certified	Yes	NJ	SHW05.07310	SCM	Methanol Extract, Closed System P & T	[SW-846 5035A] [SW-846 5035H]	Volatile organics - high conc.
Certified	Yes	NJ	SHW05.10000	SCM	Cleanup-Alumina	[SW-846 3610B]	Semivolatile organics
Certified	Yes	NJ	SHW05.11000	SCM	Petroleum Waste, Cleanup Alumina	[SW-846 3611B]	Semivolatile organics
Certified	Yes	NJ	SHW05.12000	SCM	Cleanup-Florisil	[SW-846 3620C] [SW-846 3620B]	Semivolatile organics
Certified	Yes	NJ	SHW05.13000	SCM	Cleanup-Silica Gel	[SW-846 3630C]	Semivolatile organics
Certified	Yes	NJ	SHW05.16000	SCM	Cleanup-Sulfur Removal	[SW-846 3660B]	Semivolatile organics
Certified	Yes	NJ	SHW05.17000	SCM	Cleanup-Sulfuric Acid/KMnO4	[SW-846 3665A]	Semivolatile organics

KEY: AE = Air and Emissions, BT = Biological Tissues, DW = Drinking Water, NPW = Non-Potable Water, SCM = Solid and Chemical Materials

New Jersey Department of Environmental Protection

National Environmental Laboratory Accreditation Program

ANNUAL CERTIFIED PARAMETER LIST AND CURRENT STATUS

Effective as of 07/01/2011 until 06/30/2012

Laboratory Name: ENVIRONMENTAL SCIENCE CORPORATION Laboratory Number: TN002 Activity ID: NLC110001
12065 LEBANON RD
MT. JULIET, TN 37122

Category: SHW09 -- Miscellaneous Parameters

Status	Eligible to Report NJ Data	State	Code	Matrix	Technique Description	Approved Method	Parameter Description
Certified	Yes	NJ	SHW09.01000	SCM	Extraction SFE, Infrared Spectrometry	[SW-846 8440]	Total rec. petroleum hydrocarbons
Certified	Yes	NJ	SHW09.04000	SCM	Extraction, Oils and Solids	[SW-846 9013] [USER DEFINED 9013A]	Cyanide
Certified	Yes	NJ	SHW09.08100	SCM	Extraction	[SW-846 9023]	Extractable organic halides (EOX)
Certified	Yes	NJ	SHW09.16000	SCM	Mix with Water or Calcium Chloride	[SW-846 9045D] [SW-846 9045C]	pH - soil and waste
Certified	Yes	NJ	SHW09.25000	SCM	Extraction & Gravimetric	[SW-846 9071 B]	Oil & grease - sludge-hem
Certified	Yes	NJ	SHW09.25100	SCM	Extraction & Gravimetric - LL or SPE	[SW-846 9071 B]	Oil & grease - sludge-hem-npm
Certified	Yes	NJ	SHW09.28300	SCM	Bomb Calorimeter	[ASTM D5468 and D482]	% ash
Certified	Yes	NJ	SHW09.28350	SCM	Bomb Calorimeter	[ASTM D240]	Heat of combustion (BTU)
Certified	Yes	NJ	SHW09.29000	SCM	Flow-Through Paint Filter, Observation	[SW-846 9095] [USER DEFINED 9095A] [SW-846 9095B]	Free liquid
Certified	Yes	NJ	SHW09.54150	SCM	Ion Chromatography	[SW-846 9056] [SW-846 9056A]	Orthophosphate

Joseph F. Aiello, Chief

KEY: AE = Air and Emissions, BT = Biological Tissues, DW = Drinking Water, NPW = Non-Potable Water, SCM = Solid and Chemical Materials

ENVIRONMENTAL SCIENCE CORPORATION
Certification Summary

Updated 10/06/11

State/Agency	Certificate Number	Expiration Date/Status	Certified Programs	Approved Programs[8]	Cert.Type	Cert. Authority
Alabama	**40660**	**6/30/2012**	DW	WW, RCRA, UST	Reciprocity	TN
Alaska	**UST-080**	**1/11/2012**	UST	UST	AK	AK
Arizona	**AZ0612**	**6/25/2012**	AIR, DW, WW, RCRA, UST		Audit	AZ
Arkansas	**88-0469**	**1/21/2012**	WW, RCRA, UST, Bloassay		NELAP	NJ
California	**01157CA**	**8/31/2012**	WW, RCRA, UST		NELAP	NJ
Colorado	**None**	**3/31/2012**	DW	WW, RCRA, UST	Reciprocity	TN
Connecticut	**PH-0197**	**3/31/2013**	DW	WW, RCRA, UST	Reciprocity	TN
Florida	**E87487**	**6/30/2012**	AIR, DW, WW, RCRA, UST		NELAP	NJ
Georgia DW	**923**	**6/16/2013**	DW		Reciprocity	TN
Georgia	**None**	**6/30/2012**	WW, RCRA, UST		NELAP	NJ
Idaho	**TN00003**	**6/1/2011**	DW	WW, RCRA, UST	NELAP	NJ
Illinois	**200008**	**11/30/2011**	DW, WW, RCRA, UST		NELAP	NJ
Indiana	**C-TN-01**	**6/16/2013**	DW	WW, RCRA, UST	Reciprocity	TN
Iowa	**364**	**5/1/2012**	WW, RCRA, UST		Audit	IA
Kansas	**E-10277**	**10/31/2011**	DW, WW, RCRA, UST		NELAP	NJ
Kentucky DW	**90010**	**12/31/2011**	DW	WW, RCRA	Reciprocity	TN
Kentucky UST	**16**	**10/16/2011**	UST		Audit	A2LA
Louisiana	**Agency ID 30792**	**6/30/2012**	WW, RCRA, UST, AIR		NELAP	NJ
Maine	**TN0002**	**7/5/2013**	DW, WW	RCRA, UST	Reciprocity	TN, NJ
Maryland	**324**	**12/31/2011**	DW		Reciprocity	TN
Massachusetts	**M-TN003**	**6/30/2012**	DW,WW	RCRA, UST	Reciprocity	TN
Michigan	**9958**	**6/16/2013**	DW	WW, RCRA, UST	Reciprocity	TN
Minnesota	**047-999-395**	**12/31/2011**	WW, RCRA, UST		Audit	MN
Mississippi	**None**	**6/16/2013**	DW	WW, RCRA, UST	Reciprocity	NJ
Missouri	**340**	**6/16/2013**	DW	WW, RCRA, UST	Reciprocity	NJ
Montana	**CERT0086**	**Renewal**	DW	WW, RCRA, UST	Reciprocity	TN
Nebraska	**NA**	**6/30/2012**	DW	WW, RCRA, UST	Reciprocity	TN
Nevada	**TN-03-2002-34**	**6/30/2012**	WW, DW, RCRA, UST		NELAP	NJ
New Hampshire	**2975**	**5/20/2012**	DW, WW	RCRA, UST	NELAP	NJ
New Jersey - NELAP	**TN002**	**6/30/2012**	DW, WW, RCRA, UST, AIR		NELAP	NJ
New Mexico	**None**	**6/30/2012**	DW	WW, RCRA, UST	NELAP	NJ
New York	**11742**	**4/1/2012**	WW, RCRA, UST, AIR		NELAP	NJ
North C. Aquatic Tox	**41**	**11/1/2011**	Aquatic Toxicity		Audit	NC
North Carolina DW	**DW21704**	**7/31/2012**	DW		Audit	NC
North Carolina	**Env375**	**12/31/2011**	WW, RCRA, UST		Audit	NC
North Dakota	**R-140**	**6/30/2012**	DW, WW, RCRA		Reciprocity	TN, WI
Ohio VAP	**CL0069**	**3/25/2013**	WW, RCRA, UST, AIR		Audit	OH
Oklahoma	**9915**	**8/31/2012**	WW, RCRA, UST, BIOASSAY		NELAP	NJ
Oregon	**TN200002**	**1/15/2012**	DW, WW, RCRA, UST		NELAP	NJ
Pennsylvania	**68-02979**	**12/31/2011**	DW, WW, RCRA, UST	0	NELAP	NJ
Rhode Island	**221**	**6/16/2013**	DW, Env. Lead	WW, RCRA, UST	Reciprocity	TN, AIHA
South Carolina	**84004**	**6/30/2011**	WW, RCRA, UST		NELAP	NJ
South Dakota	**Pending**	**Pending**				
Tennessee DW	**2006**	**6/16/2013**	DW	WW, RCRA, UST	Audit	TN
Tennessee DW Micro	**2006**	**10/12/2012**	DW Micro		Audit	TN
Texas - Env.	**T 104704245-07-TX**	**10/31/2011**	DW, WW, RCRA, AIR		Reciprocity	NJ
Texas - Mold	**LAB0152**	**3/10/2013**	MOLD		NA	TX
Utah	**6157585858**	**6/30/2012**	DW, WW, RCRA, UST		NELAP	NJ
Vermont	**VT2006**	**1/5/2012**	DW	WW, RCRA, UST	Reciprocity	TN
Virginia DW	**109**	**6/30/2012**	DW	WW, RCRA, UST	NELAP	NJ
Virginia VELAP	**460132**	**6/14/2012**		WW, RCRA, UST	NELAP	NJ
Washington	**C1915**	**8/19/2012**	DW, WW, RCRA, UST, AIR		Audit	A2LA
West Virginia	**233**	**2/28/2012**	WW, RCRA, UST		Audit	WV
Wisconsin	**998093910**	**8/31/2012**	WW, RCRA, UST		Audit	WI
Wyoming	**A2LA**	**11/30/2011**	UST	WW, RCRA	Audit	A2LA
Other Agencies						
A2LA[1]	**1461.01**	**11/30/2011**	DW, WW, RCRA, UST, AIR, MICRO		Audit	A2LA
AIHA[2]	**100789**	**6/1/2012**	IHLAP[4], ELLAP[5], EMLAP[6]		Audit	AIHA
DOD[11]	**1461.01**	**11/30/2011**	RCRA, UST		Audit	A2LA
EPA[10]	**TN00003**	**None**	Cryptospiridium		Audit	EPA
USDA[7]	**S-67674**	**8/7/2012**	Quarantine Permit		Audit	USDA

(1) A2LA = American Association for Laboratory Accred.
(2) AIHA = American Industrial Hygiene Association
(3) NELAP = National Environmental Laboratory Accred. Program
(4) IHLAP = Industrial Hygiene Laboratory Accred. Program
(5) ELLAP = Environmental Lead Laboratory Accred. Program
(6) EMLAP = Environmental Microbiology Laboratory Accreditation Program
(7) USDA = United States Department of Agriculture
(8) Approved Programs = The state does not have a formal certification program.
(9) Pending = The state is processing our application.
(10) EPA = Environmental Protection Agency
(11) Department of Defense

Printed 10/21/2011

Appendix B
Field Forms

ENSAFE

WELL DEVELOPMENT & GROUNDWATER SAMPLING FORM

DATE:	JOB NUMBER:	EQUIPMENT (Make/Model #/Serial #):
PROJECT:	EVENT:	/ /
WELL ID:	LOCATION:	/ /
WEATHER CONDITIONS:	AMBIENT TEMP:	/ /
REVIEWED BY:	PERSONNEL:	/ /

WELL DIA:	WELL DEVELOPMENT	
TOTAL DEPTH from TOC (ft.):	START:	FINISH:
DEPTH TO WATER from TOC (ft.):	VOLUME PURGED (gal):	
LENGTH OF WATER COL. (ft.):	GROUNDWATER SAMPLING	
1 VOLUME OF WATER (gal):	START:	FINISH:
3 VOLUMES OF WATER (gal):	VOLUME PURGED (gal):	
	ANALYSIS:	

WELL DEVELOPMENT PARAMETERS		GW SAMPLING PARAMETERS	
Temperature:	± 1.0° C	Temperature:	± 0.2° C
pH:	± 0.5 standard units	pH:	± 0.2 standard units
Specific Conductance:	± 10% of the past measurement	Specific Conductance:	± 5% of the past measurement
Turbidity:	relatively stable	DO:	≤ 20% saturation
		ORP:	± 10 millivolts
		Turbidity:	≤ 10 NTU

IN-SITU TESTING

Circle one: DEVELOPMENT SAMPLING ☐ Bailer ☐ Pump Description:

Time (hh:mm):												
pH (units):												
Conductivity (mS/cm):												
Turbidity (NTU):												
DO (mg/L): YSI 556												
DO (mg/L): YSI 550												
Temperature (C°):												
ORP (mV):												
Volume Purged (gal):												
Depth to Water (ft):												
								Well Goes Dry While Purging ☐				

SAMPLE DATA

☐ Bailer ☐ Pump Description:

Sample ID	Date (m/d/y)	Time (hh:mm)	Bottles (total to lab)	Filtered (0.45 μm)	Remarks

Purging/Sampling Device Decon Process:

COMMENTS:

Purge water placed in drum#_____

ENSAFE

LOCATION OF BORING	JOB NO.	CLIENT	LOCATION

DRILLING METHOD:	BORING NO.
	SHEET OF
SAMPLING METHOD:	DRILLING
	START / FINISH
WATER LEVEL	TIME / TIME
TIME	
DATE	DATE / DATE
CASING DEPTH	

DATUM ELEVATION

SAMPLER TYPE	INCHES DRIVEN / INCHES RECOVERED	DEPTH OF CASING	SAMPLE NO. / SAMPLE DEPTH	BLOWS/FT SAMPLER	VAPOR CONCENTRATIONS (PPM)	DEPTH IN FEET	SOIL GRAPH	SURFACE CONDITIONS
						0		
						1		
						2		
						3		
						4		
						5		
						6		
						7		
						8		
						9		
						0		
						1		
						2		
						3		
						4		
						5		
						6		
						7		
						8		
						9		
						0		

DRILLING CONTR.

BY

DATE

CHK'D BY

Field Instrument Calibration Form

Calibrated by: _____ **Equipment (Make/Model/Serial#):** _____

Date: _____ **Equipment (Make/Model/Serial#):** _____

pH (su) — Standard: ± 0.2 standard units

Initial Calibration / Initial Calibration Verification

	Hach SL	Reading	Pine SL	Reading
pH7				
pH4				

Continuing Calibration Verification

	Hach SL	Reading	Deviation	Acceptable Variance (Y/N)
pH7				
pH4				

DO (mg/L) — Standard: ± 0.3 mg/L of theoretical*

IC (Temp:)

Saturation (%)	Reading (%)	Theoretical (mg/L)	Reading (mg/L)
100			

ICV (Temp:)

CCV (Temp:)

Saturation (%)	Reading (%)	Deviation	Acceptable Variance (Y/N)
100			

Theoretical (mg/L)	Reading (mg/L)	Deviation	Acceptable Variance (Y/N)

ORP (mV) — Standard: NA

IC (Zobell SL:)

TCS (Std/Temp)	Reading

ICV (Pine SL:)

TCS (Std/Temp)	Reading

CCV (Zobell SL:)

TCS (Std/Temp)	Reading	Deviation	Acceptable Variance (Y/N)

Turbidity (ntu) — Standard: ±10% of Standard

Initial Calibration

Standard	Reading

Continuing Calibration Verification

Standard	Reading	Deviation	Acceptable Variance (Y/N)

Conductivity (ms^C/cm) — Standard: ± 5% of standard value

IC (YSI SL:)

Standard	Reading

ICV (Pine SL:)

Standard	Reading

CCV (YSI SL:)

Standard	Reading	Deviation	Acceptable Variance (Y/N)

Comments:

Notes:

SL	solution lot	su	standard units	ntu	Nephelometric Turbidity Units
TCS	temperature corrected standard	mV	millivolts	°C	degrees Celsius
Std	standard	%	percent	ms^C/cm	millisiemens per centimeter (temperature corrected)
Temp	temperature	mg/L	milligrams per liter	*	Theoretical value listed on Table FT 1500-1 (attached)

ENSAFE

WELL DEVELOPMENT & GROUNDWATER SAMPLING FORM

DATE:	JOB NUMBER:	EQUIPMENT (Make/Model #/Serial #):
PROJECT:	EVENT:	/ /
WELL ID:	LOCATION:	/ /
WEATHER CONDITIONS:	AMBIENT TEMP:	/ /
REVIEWED BY:	PERSONNEL:	/ /

WELL DIA:	WELL DEVELOPMENT	
TOTAL DEPTH from TOC (ft.):	START:	FINISH:
DEPTH TO WATER from TOC (ft.):	VOLUME PURGED (gal):	
LENGTH OF WATER COL. (ft.):	GROUNDWATER SAMPLING	
1 VOLUME OF WATER (gal):	START:	FINISH:
3 VOLUMES OF WATER (gal):	VOLUME PURGED (gal):	
	ANALYSIS:	

WELL DEVELOPMENT PARAMETERS		GW SAMPLING PARAMETERS	
Temperature:	± 1.0° C	Temperature:	± 0.2° C
pH:	± 0.5 standard units	pH:	± 0.2 standard units
Specific Conductance:	± 10% of the past measurement	Specific Conductance:	± 5% of the past measurement
Turbidity:	relatively stable	DO:	≤ 20% saturation
		ORP:	± 10 millivolts
		Turbidity:	≤ 10 NTU

IN-SITU TESTING

Circle one: DEVELOPMENT SAMPLING ☐ Bailer ☐ Pump Description:

Time (hh:mm):												
pH (units):												
Conductivity (mS/cm):												
Turbidity (NTU):												
DO (mg/L): YSI 556												
DO (mg/L): YSI 550												
Temperature (C°):												
ORP (mV):												
Volume Purged (gal):												
Depth to Water (ft):												
								Well Goes Dry While Purging ☐				

SAMPLE DATA

☐ Bailer ☐ Pump Description:

Sample ID	Date (m/d/y)	Time (hh:mm)	Bottles (total to lab)	Filtered (0.45 μm)	Remarks

Purging/Sampling Device Decon Process:

COMMENTS:

Purge water placed in drum#_____

NAVSUPPACT MID-SOUTH BUILDING CAC ACCESS / ISSUE APPLICATION
From: ENVIRONMENTAL DIVISION **To:** Email to MILL_BADGE@NAVY.MIL **Subj:** Request for Identification Badge, and access to restricted spaces

APPLICANT INFORMATION				
Name (Last, First, Middle Initial)	Gender:	Citizenship:	SSN:	
Command/Dep. NAVFAC/PWD Mid-South	Title:		Date of Birth:	
Race:	State Drivers License#:			
Height:	Weight:	Hair Color:	Eye Color:	Work Phone:
Company Name:	Contract Exp Date:	Contract Number:		

1. COMMAND ACCESS REQUEST		
☐ New Access	☐ Access Modification	☐ Non-CAC Contractor

2. REASON FOR BADGE ISSUANCE		
☐ Initial Issue	☐ Renewal	☐ Replacement

EXTERNAL BUILDING ACCESS:
External Building(s), Days, and Time for access(EX: 455, Mon-Fri, 0600-1800)

RESTRICTED SPACE(s) ACCESS REQUIRED:
Building(s), Room Number, Days, Time for access(EX: 769, Room 188, 24 X 7)

ONLY COMMAND APPOINTED AUTHORIZED PERSONNEL CAN SIGN REQUEST	
Authorizing Official: (Last Name, First and Middle Initial)	Telephone Number:
Authorizing Official Signature: (N/A when emailed, verified by email from authorizing official)	Date:

Privacy Act Statement

AUTHORITY: 5 U.S.C. 301; EO 12356; EO 9397
PRINCIPAL PURPOSE: To facilitate verification of a personnel security clearance for an individual applying for building access in connection with their livelihood or official duties.
ROUTINE USES; Information may be furnished to Federal, state, or local agencies for regulatory and law enforcement purposes.
DISCLOSURE: Voluntary; however, refusal to furnish requested information may result in inability to verify essential personal information and approve requested building pass application.

RESOLUTION CONSULTANTS

CHAIN OF CUSTODY AND ANALYTICAL REQUEST RECORD

COC No.	Page of
PO No.	Project No. Phase

Project Name:

Site Location:

CTO No. RC Task Order Manager:

Sampler/Site Phone#

Lab Name: Turnaround Time(specify):

Sample Analysis Requested (*Enter number of containers for each test*)

Lab ID	Sample ID (sys_samp_code)	Location ID (sys_loc_code)	Date (mm/dd/yy)	Time (Military) (hhmm)	Matrix Code **(1)**	Sample Type **(2)**	Field Filtered (Y/N)	Total No. of Containers	(3)→											Extra Volume for MS/MSD	HOLD

***Field* Comments:**

***Lab* Comments:**

Sample Shipment and Delivery Details

Number of coolers in shipment:

Relinquished by (signature)	Date	Time	Received by (signature)	Date	Time	Samples Iced?(check) Yes_____ No_____
1			1			Method of Shipment:
2			2			Airbill No:
3			3			Date Shipped:

(1) AA=Ambient air, **AQ**=Air quality control, **ASB**=Asbestos, **CK**=Caulk, **DS**=Storm drain sediment, **GS**=Soil gas, **IC**=IDW Concrete, **IDD**=IDW Solid, **IDS**=IDW soil, **IDW**=IDW Water, **LF**=Free Product, **MA**=Mastic, **PC**=Paint Chips, **SC**=Cement/Concrete, **SE**=Sediment, **SL**=Sludge, **SO**=Soil, **SQ**=Soil/Solid quality control, **SSD**=Subsurface sediment, **SU**=Surface soil (<6 in), **SW**=Swab or wipe, **TA**=Animal tissue, **TP**=Plant tissue, **TQ**=Tissue quality control, **WG**=Ground water, **WL**=Leachate, **WO**=Ocean water, **WP**=Drinking water, **WQ**=Water quality control, **WR**=Ground water effluent, **WS**=Surface water, **WU**=Storm water, **WW**=Waste water

(2) Sample Type: AB=Ambient Blk, **EB**=Equipment Blk, **FB**=Field Blk, **FD**=Field Duplicate Sample, **IDW**=Investigative-Derived Waste, **MIS**=Incremental Sampling Methodology, **N**=Normal Environmental Sample, **TB**=Trip Blk

(3) Preservative added: **HA**=Hydrochloric Acid, **NI**=Nitric Acid, **SH**=Sodium Hydroxide, **SA**=Sulfuric Acid, **ME**=Methanol, **SB**=sodium bisulfate, **ST**=Sodium Thiosulfate If **NO preservative** added leave blank

Rev

Field Measurement of Dissolved Oxygen

Solubility of Oxygen in Water at Atmospheric Pressure1,2			
Temperature oC	Oxygen Solubility mg/L	Temperature oC	Oxygen Solubility mg/L
0.0	14.621	26.0	8.113
1.0	14.216	27.0	7.968
2.0	13.829	28.0	7.827
3.0	13.460	29.0	7.691
4.0	13.107	30.0	7.559
5.0	12.770	31.0	7.430
6.0	12.447	32.0	7.305
7.0	12.139	33.0	7.183
8.0	11.843	34.0	7.065
9.0	11.559	35.0	6.950
10.0	11.288	36.0	6.837
11.0	11.027	37.0	6.727
12.0	10.777	38.0	6.620
13.0	10.537	39.0	6.515
14.0	10.306	40.0	6.412
15.0	10.084	41.0	6.312
16.0	9.870	42.0	6.213
17.0	9.665	43.0	6.116
18.0	9.467	44.0	6.021
19.0	9.276	45.0	5.927
20.0	9.092	46.0	5.835
21.0	8.915	47.0	5.744
22.0	8.743	48.0	5.654
23.0	8.578	49.0	5.565
24.0	8.418	50.0	5.477
25.0	8.263		

1. The table provides three decimals to aid interpolation

2. Under equilibrium conditions, the partial pressure of oxygen in air-saturated water is equal to that of the oxygen in water saturated

Well Construction Form

Facility/Project Name:

Well ID.:

Facility License Number:

Type of Well:
Ground Water Monitoring ☐
Piezometer ☐ Injection ☐
Other_____

Date Well Installed:

Location of well relative to waste source:
Upgradient ☐ Downgradient ☐ Side-gradient ☐ Unknown ☐

Well Installed By:

Well Driller License Number:

Geologist:

A. Protective pipe: ft. above grade
B. Well casing, top elevation: ft. MSL
C. Land Surface Elevation: ft. MSL
D. Surface seal, bottom: ft.below grade

12. USCS classification of soil near screen:
GP☐ GM ☐ GC ☐ GW ☐ SP ☐ SM ☐
SC☐ SW☐ ML ☐ MH ☐ CL ☐ CH ☐
Bedrock ☐
13. Sieve analysis attached? Yes ☐ No ☐
14. Drilling method used: Rotary ☐ HSA ☐
Other:
15. Drilling fluid used:
Water☐ Air ☐ Drilling Mud ☐ None ☐
16. Drilling additives used? Yes ☐ No ☐
Specify:
17: Source of water:

E. Bentonite seal: top ft. (depth)
F. Fine sand: top ft. (depth)
G. Filter pack: top ft. (depth)
H. Screen joint top: ft. (depth)
I. Well bottom: f t. (depth)
J. Filter pack: bottom ft. (depth)
K. Borehole: bottom . ft.(depth)
Borehole diameter: in.

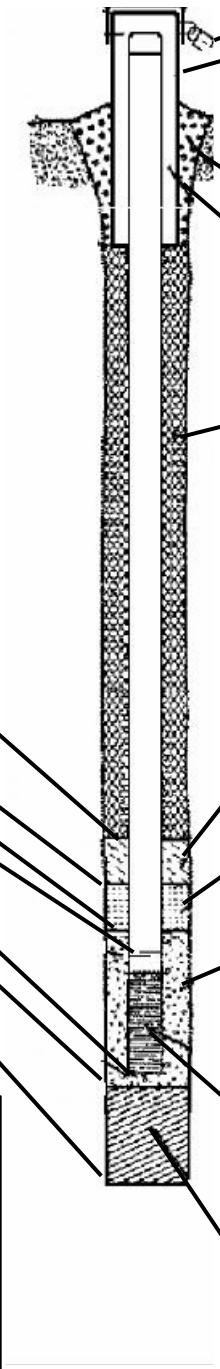

1. Cap and lock? ☐ Yes ☐ No
2. Protective cover pipe:
a. Inside diameter: in.
b. Length: ft.
c. Material: *Steel* ☐ *Other*
3. Surface seal: *Bentonite* ☐ *Concrete* ☐
Other:
4. Material blw. well casing and protective pipe:
Bentonite ☐ *Annular space seal* ☐
Other:
5. Annular space seal: *(Manufacturer name)*
a. Granular bentonite ☐
b. Bentonite/Cement slurry ☐
% bentonite ……. Bentonite/cement grout ☐
Lbs/gal mud weight … bentonite slurry ☐
c. How installed: *Tremie* ☐ *Tremie pumped* ☐
Gravity ☐
6. Bentonite seal: *(Manufacturer, product name)*
Bentonite granules ☐
☐ *¼ in.* ☐ *3/8 in.* ☐ *½ in.* *Bentonite pellets* ☐
Other:
7. Fine sand material: *(Manufacturer, product name, mesh size)*
Volume added: ft^3
8. Filter pack material: *(Manufacturer, product name, mesh size)*
Volume added: ft^3
9. Well casing: Flush-threaded Sch 40 PVC☐
Flush-threaded Sch 80 PVC☐
Other:
10. Screen material:
a. Screen type: factory cut ☐ continuous slot ☐
Other:
b. Manufacturer:
c. Slot size: 0. in.
d. Slotted length: ft.
11. Backfill material: *or* None ☐

CERTIFICATION:
I hereby certify that the information on this form is true and correct to the best of my knowledge:

_____
(Signature)

_____
(Company Name)

Appendix C
Standard Operating Procedures

Standard Operating Procedure SOP-3-01 (MS)
Utility Clearance

1.0 PURPOSE

This standard operating procedure (SOP) describes the process for determining the presence of subsurface utilities and other cultural features at locations where planned site activities involve the physical disturbance of subsurface materials. The procedure applies to the following activities: soil gas surveying, excavating, trenching, borings and installation of monitoring, injection, and extraction wells, use of soil recovery or slide-hammer hand augers, and all other intrusive sampling activities. The primary purpose of the procedure is to minimize the potential for damage to underground utilities and other subsurface features, which could result in physical injury, disruption of utility service, or disturbance of other subsurface cultural features.

If there are applicable procedures from Resolution Consultants, State and/or Federal entities that are not addressed in this SOP, those procedures may be added as an appendix to the project specific Sampling and Analysis Plan.

2.0 SCOPE

This procedure shall serve as a management-approved professional guidance and is consistent with protocol in the Uniform Federal Policy-Quality Assurance Project Plan (DoD 2005). As professional guidance for specific activities, this procedure is not intended to obviate the need for professional judgment during unforeseen circumstances. Deviations from this procedure while planning or executing planned activities must be approved by either the Contract Task Order (CTO) Manager or the Quality Assurance (QA) Manager, and documented.

3.0 DEFINITIONS

3.1 Utility

For this procedure, a utility is defined as a manmade underground line or conduit, cable, pipe, vault or tank that is, or was, used for the transmission of material or energy (e.g., gas, electrical, telephone, steam, water or sewage, product transfer lines, or underground storage tanks).

3.2 As-Built Plans

As-built plans are plans or blueprints depicting the locations of structures and associated utilities on a property.

3.3 One-Call

The Utility Notification Center is the one-call agency for nationwide 'call before you dig' activities. The Utility Notification Center is open 24 hours a day, and accepts calls from anyone planning to

dig. The phone number 811 is the designated call before you dig phone number for Tennessee that directly connects you to your local one call center. Additional information can be found at www.call811.com/.

Calling before you dig ensures that any publicly owned underground lines will be marked, so that you can dig around them safely. Having the utility lines marked not only prevents accidental damage to the lines, but prevents property damage and personal injuries that could result in breaking a line.

The following information will need to be provided when a call is placed to One-Call:

- Your name, phone number, company name (if applicable), and mailing address
- What type or work is being completed
- Who the work is being completed for
- The county and city the work is taking place in
- The address or the street where the work is taking place
- Marking instructions, (specific instructions as to where the work is taking place)

Under normal circumstances it takes between 2 days to 5 days from the time you call (not counting weekends or holidays) to have the underground lines marked. Because these laws vary from state to state, exactly how long it will take depends on where your worksite is located. You will be given an exact start time and date when your locate request is completed, which will comply with the laws in your area.

In the event of an emergency (any situation causing damage to life or property, or a service outage), lines can be marked sooner than the original given time if requested.

3.4 Toning

Toning is the process of surveying an area utilizing one or more surface geophysical methods to determine the presence or absence of underground utilities. Typically, toning is conducted after identifying the general location of utilities and carefully examining all available site utility plans. Each location is marked according to the type of utility being identified. In addition, areas cleared by toning are flagged or staked to indicate that all identified utilities in a given area have been toned. Toning is commonly conducted by the Utility Notification Center; however, private utility locating services are required in instances where the Utility Notification Center will not enter a

PRINTED COPIES ARE UNCONTROLLED. CONTROLLED COPY IS AVAILABLE ON COMPANY INTRANET.

subject property, suspect utility lines not included by the Utility Notification Center may be present on the property, or utility maps or site personnel with utility information are not available.

4.0 RESPONSIBILITIES

The CTO Manager, or designee, is responsible for verifying that these utility locating procedures are performed prior to the initiation of active subsurface exploration. The CTO Manager is responsible for ensuring that all personnel involved in sampling and/or testing shall have the appropriate education, experience, and training to perform their assigned tasks.

QA Manager or Technical Director is responsible for ensuring overall compliance with this procedure.

The onsite Field Manager (FM) is responsible for planning utility clearance and for locating and marking underground utilities according to this procedure.

Field personnel are responsible for the implementation of this procedure.

5.0 PROCEDURES

Follow the following steps at all sites where subsurface exploration will include excavations, drilling, or any other subsurface investigative method that could damage utilities at a site. In addition to the steps outlined below, always exercise caution while conducting subsurface exploratory work.

5.1 Prepare Preliminary Site Plan

Prepare a preliminary, scaled site plan depicting the proposed exploratory locations as part of the work plan. Include as many of the cultural and natural features as practical in this plan.

5.2 Review Background Information

Search existing plan files to review the as-built plans to identify the known location of utilities at the site. Plot the locations of utilities identified onto a preliminary, scaled site plan. Inform the CTO Manager if utilities lie within close proximity to a proposed exploration or excavation location. The CTO Manager will determine if it is necessary to relocate proposed sampling or excavation locations.

Include the utility location information gathered during investigation (e.g., remedial investigation or remedial site evaluation) work in the project design documents for removal or remedial actions. In

this manner, information regarding utility locations collected during implementation of a CTO can be shared with the other contractors during implementation of a particular task order. In many instances, this will help to reduce the amount of additional geophysical surveying work the other contractor may have to perform.

Conduct interviews with onsite and facility personnel familiar with the site to obtain additional information regarding the known and suspected locations of underground utilities. In addition, if appropriate, contact shall be made with local utility companies to request their help in locating underground lines. Pencil in the dimensions, orientation, and depth of utilities, other than those identified on the as-built plans, at their approximate locations on the preliminary plans. Enter the type of utility, the personnel who provided the information, and the date the information was provided into the field log.

During the pre-fieldwork interviewing process, the interviewer will determine which site personnel should be notified in the event of an incident involving damage to existing utilities. Record this information in the field logbook with the corresponding telephone numbers and addresses.

5.3 Site Visit — Locate Utilities — Toning

The Resolution Consultants FM will complete and submit a dig permit, provided in Attachment 1, to the NSA Mid-South environment point of contact at least 15 business days in advance of the site access to initiate the utility clearance process for all intrusive sampling locations. The 15 business days will allow the Base Operations Support contractor to mark Navy utilities. In addition, the Resolution Consultants FTL will contact the one-call utility locator service at least 7 days prior to commencement of field work to complete a utility clearance ticket for the areas under investigation.

Utilities that are identified in the field, but not shown or incorrectly located on the work approval documentation, will be marked directly on the document and returned to the NSA Mid-South point of contact for inclusion in the Geographic Information System database.

Prior to the initiation of field activities, the field task manager or similarly qualified staff personnel shall visit the site and note existing structures and evidence of associated utilities, such as fire hydrants, irrigation systems, manhole and vault box covers, standpipes, telephone switch boxes, free-standing light poles, gas or electric meters, pavement cuts, and linear depression. Compare notes of the actual site configuration to the preliminary site plan. Note deviations in the field logbook and on the preliminary site plan. Accurately locate or survey and clearly mark with stakes,

PRINTED COPIES ARE UNCONTROLLED. CONTROLLED COPY IS AVAILABLE ON COMPANY INTRANET.

pins, flags, paint, or other suitable devices all areas where subsurface exploration is proposed. These areas shall correspond with the locations drawn on the preliminary site plan.

Following the initial site visit by the FM, Utility One Call or a subcontracted utility locator will locate, identify, and or/tone all utilities in the areas slated for investigation. The locator should utilize appropriate sensing equipment to attempt to locate utilities that might not have appeared on the as-built plans. This may involve the use of surface geophysical methods. Use other appropriate surface geophysical methods, such as Ground Penetrating Radar, if non-metallic cultural features are likely to be present at the site. Proposed drilling/excavation areas should be clearly marked on the ground before the utility locator enters the property so locations can be cleared and utilities appropriately marked relative to proposed investigation areas. Any utilities identified on the site that haven't been previously noted on site plans should be noted and transferred for subsequent reporting.

The FM shall refer to the site-specific health and safety plan to determine the safe distance to maintain from the known or suspected utility. It may be necessary to relocate proposed exploration or excavation areas. If this is required, the FM or a similarly qualified individual shall relocate them and clearly mark them using the methods described above. Completely remove the markings at the prior location. Plot the new locations on the site plan and delete the prior locations from the plan. In all proposed drilling instances, a hand auger or non-mechanical probing device (rebar, pipe, etc.) should be used to verify the absence of utilities.

5.4 Prepare Site Plan

Prior to the initiation of field activities, draft a final site plan that indicates the location of subsurface exploration areas and all known or suspected utilities present at the site. Provide copies of this site plan to the Navy Technical Representative (NTR), the CTO Manager, and the subcontractor who is to conduct the subsurface exploration/excavation work. Review the site plan with the NTR to verify its accuracy prior to initiating subsurface sampling activities.

6.0 RECORDS

Keep a bound field logbook detailing all utility locating procedures. The logbook will describe any changes and modifications made to the original investigation/exploration plan. Ticket reference numbers provided by Utility One Call should be maintained with the field records.

7.0 HEALTH AND SAFETY

Field and subcontractor personnel shall review and adhere to the site-specific health and safety plan prior to proceeding with any subsurface excavation activities.

8.0 REFERENCES

Department of Defense, United States (DoD). 2005. *Uniform Federal Policy for Quality Assurance Project Plans, Part 1: UFP-QAPP Manual*. Final Version 1. DoD: DTIC ADA 427785, EPA-505-B-04-900A. In conjunction with the U.S. Environmental Protection Agency and the Department of Energy. Washington: Intergovernmental Data Quality Task Force. March. On-line updates available at: http://www.epa.gov/fedfac/pdf/ufp_qapp_v1_0305.pdf

9.0 ATTACHMENTS

Attachment 1: Excavation Permit Request, Naval Support Activity Mid-South

Attachment 1

Excavation Permit Request, Naval Support Activity Mid-South

EXCAVATION PERMIT REQUEST
NAVAL SUPPORT ACTIVITY (NAVSUPPACT) MID-SOUTH

LOG NO.: _____	NAVSUPPACTMIDSOUTHINST 11011.3
CLEARANCE IS REQUESTED TO PROCEED WITH WORK INVOLVING EXCAVATION	
SERVICE CALL NO.:	DELIVERY ORDER NO.:
CONTRACT NO.: N62470 11 D 8013	BOSS/ROICC POC/PHONE NO.:
1. FACILITY/LOCATION:	
2. SCOPE OF WORK: (depth, width, length, location, including sketch) **If any line is damaged during the excavation process, notify the Public Works Department's Facilities Management Division at (901) 874-5917 or 5913, or the PW Trouble Desk at (901) 874-5744.**	
3. DATE CLEARANCE DESIRED: (min. 10 workday notice)	4. DATE SUBMITTED:

5. REQUESTOR: (company, etc.)	6. REQUESTOR'S SIGNATURE:	7. PHONE NO:
EnSafe Inc.		901 372-7962

Non-Navy Utilities	Excavator must contact following non-Navy utility owners directly to locate/clear desired excavation area. Date Contacted Tennessee One 1-800-351-1111: _____ Millington Public Works 873-5650: _____	Utilities indicated in the area:

AREA BELOW FOR PUBLIC WORKS DEPARTMENT ONLY

NAVY-OWNED UTILITIES		PLANS AVAILABLE **	UTILITY NOT IN AREA**	PWE SIGNATURE	DATE MARKED/ BOSS CONTRACTOR SIGNATURE	ROICC or CMD Check
8.	ELECTRICAL DISTRIBUTION					
9.	NATURAL GAS DISTRIBUTION					
10.	SANITARY DISTRIBUTION					
11.	STEAM DISTRIBUTION					
12.	WATER DISTRIBUTION					
13.	STORM SEWER					
14.	COMMUNICATIONS (Send completed copy to BCO)					
15.	ENVIRONMENTAL DIVISION SWMU/WETLAND CLEARANCE (Send copy for concurrent review)					

APPROVAL SIGNATURE (PWE):	DATE:

ROICC/CMD use:

COMMENTS:

Utility plans should not be assumed as accurate as-built conditions. All utilities in or near the excavation area should be located to ensure exact locations prior to work commencing.

Standard Operating Procedure SOP-3-02

Field Logbooks

1.0 PURPOSE

This standard operating procedure describes the activities and responsibilities pertaining to the identification, use, and control of logbooks and associated field data. If there are procedures from Resolution Consultants, state and/or federal that are not addressed in this Standard Operating Procedure (SOP) and are applicable to logbooks, then those procedures may be added as an appendix to the project-specific Sampling and Analysis Plan.

2.0 SCOPE

This procedure shall serve as management-approved professional guidance and is consistent with protocol in the Uniform Federal Policy-Quality Assurance Project Plan Appendix A Section 1.4 *Field Documentation SOPs* (DoD, 2005). As professional guidance for specific activities, this procedure is not intended to obviate the need for professional judgment during unforeseen circumstances. Deviations from this procedure while planning or executing planned activities must be approved by either the Contract Task Order (CTO) Manager or the Quality Assurance (QA) Manager, and documented.

3.0 DEFINITIONS

3.1 Logbook

A logbook is a bound field notebook with consecutively numbered, water-repellent pages that is clearly identified with the name of the relevant activity, the person assigned responsibility for maintenance of the logbook, and the beginning and ending dates of the entries.

3.2 Data Form

A data form is a predetermined format utilized for recording field data that may become, by reference, a part of the logbook (e.g., soil boring logs, trenching logs, surface soil sampling logs, groundwater sample logs, and well construction logs are data forms).

4.0 RESPONSIBILITIES

The CTO Manager, or designee, is responsible for determining which team members shall record information in field logbooks and for obtaining and maintaining control of the required logbooks. The CTO Manager, or designee, shall review the field logbook on at least a monthly basis. The CTO Manager, or designee, is responsible for reviewing logbook entries to determine compliance with this procedure and to ensure that the entries meet the project requirements.

PRINTED COPIES ARE UNCONTROLLED. CONTROLLED COPY IS AVAILABLE ON COMPANY INTRANET

A knowledgeable individual such as the Field Manager, CTO Manager, or QA Manager shall perform a technical review of each logbook at a frequency commensurate with the level of activity (weekly is suggested, or, at a minimum, monthly). Document these reviews by the dated signature of the reviewer on the last page or page immediately following the material reviewed.

The Field Manager is responsible for ensuring that all project field staff follows these procedures and that the logbook is completed properly and daily. The Field Manager is also responsible for submitting copies to the CTO Manager, who is responsible for filing them and submitting a copy to the Navy (if required by the CTO Statement of Work).

The logbook user is responsible for recording pertinent data into the logbook to satisfy project requirements and for attesting to the accuracy of the entries by dated signature. The logbook user is also responsible for safeguarding the logbook while having custody of it.

Field personnel are responsible for the implementation of this procedure.

5.0 PROCEDURE

The field logbook serves as the primary record of field activities. Make entries chronologically and in sufficient detail to allow the writer or a knowledgeable reviewer to reconstruct the applicable events. Store the logbook in a clean location and use it only when outer gloves used for personal protective equipment (PPE) have been removed.

Individual data forms may be generated to provide systematic data collection documentation. Entries on these forms shall meet the same requirements as entries in the logbook and shall be referenced in the applicable logbook entry. Individual data forms shall reference the applicable logbook and page number. At a minimum, include names and collection times of all samples collected in the logbook even if they are recorded elsewhere.

Enter field descriptions and observations into the logbook, as described in Attachment 1, using indelible black ink.

Typical information to be entered includes the following:

- Dates (month/day/year) and times (military) of all onsite activities and entries made in logbooks/forms

PRINTED COPIES ARE UNCONTROLLED. CONTROLLED COPY IS AVAILABLE ON COMPANY INTRANET

- Site name and description
- Site location by city, county, and longitude and latitude, if warranted
- Weather conditions, including approximate temperature
- Fieldwork documentation, including site entry and exit times
- Descriptions of, and rationale for, approved deviations from the work plan (WP) or field sampling plan
- Field instrumentation readings
- Names, job functions, and organizational affiliations of personnel onsite
- Photograph references
- Site sketches and diagrams made onsite
- Identification and description of sample morphology, collection locations and sample numbers as described in SOP 3-03, *Sample Labeling and Chain-of-Custody Procedures*
- Sample collection information, including dates (month/day/year) and times (military) of sample collections, sample collection methods and devices, station location numbers, sample collection depths/heights, sample preservation information, sample pH (if applicable), analysis requested (analytical groups), etc., as well as chain-of-custody (COC) information such as sample identification numbers cross-referenced to COC sample numbers
- Sample naming convention
- Field quality control (QC) sample information
- Site observations, field descriptions, equipment used, and field activities accomplished to reconstruct field operations

PRINTED COPIES ARE UNCONTROLLED. CONTROLLED COPY IS AVAILABLE ON COMPANY INTRANET

- Meeting information
- Important times and dates of telephone conversations, correspondence, or deliverables
- Field calculations
- PPE level
- Calibration records
- Contractor and subcontractor information (address, names of personnel, job functions, organizational affiliations, contract number, contract name, and work assignment number)
- Equipment decontamination procedures and effectiveness
- Laboratories receiving samples and shipping information, such as carrier, shipment time, number of sample containers shipped, and analyses requested
- User signatures

The logbook shall reference data maintained in other logs, forms, etc. Correct entry errors by drawing a single line through the incorrect entry, then initialing and dating this change. Enter an explanation for the correction if the correction is more than for a mistake.

At least at the end of each shift, the person making the entry shall sign or initial each entry or group of entries. Enter logbook page numbers on each page to facilitate identification of photocopies. If a p erson's initials are used for identification, or if uncommon acronyms are used, identify these on a page at the beginning of the logbook.

6.0 RECORDS

Retain the field logbook as a permanent project record. If a particular CTO requires submittal of photocopies of logbooks, perform this as required.

7.0 HEALTH AND SAFETY

In order to keep the logbook clean, store it in a clean location and use it only when outer gloves used for PPE have been removed.

8.0 REFERENCES

Department of Defense, United States (DoD). 2005. *Uniform Federal Policy for Quality Assurance Project Plans, Part 1: UFP-QAPP Manual*. Final Version 1. DoD: DTIC ADA 427785, EPA-505-B-04-900A. In conjunction with the U.S. Environmental Protection Agency and the Department of Energy. Washington: Intergovernmental Data Quality Task Force. March. On-line updates available at: http://www.epa.gov/fedfac/pdf/-ufp_qapp_v1_0305.pdf.

9.0 ATTACHMENTS

Attachment 1: Description of Logbook Entries

Attachment 1

Description of Logbook Entries

Logbook entries shall contain the following information, as applicable, for each activity recorded. Some of these details may be entered on data forms, as described previously, in lieu of recording in the logbook.

Name of Activity	For example, Groundwater Sampling, Carbon Substrate Injections, Aquifer Testing, Etc.
Task Team Members and Equipment	Name all members on the field team involved in the specified activity. List equipment used by serial number or other unique identification, including calibration information.
Activity Location	Indicate location of sampling area as indicated in the field sampling plan.
Weather	Indicate general weather and precipitation conditions.
Level of PPE	Record the level of PPE (e.g., Level D).
Methods	Indicate method or procedure number employed for the activity.
Sample Name	Indicate the unique name associated with the physical samples. Identify QC samples.
Sample Type and Volume	Indicate the medium, container type, preservative, and the volume for each sample.
Time and Date	Record the time and date when the activity was performed (e.g., 0830/08/OCT/89). Use the 24-hour clock for recording the time and two digits for recording the day of the month and the year.
Analyses	Indicate the appropriate code for analyses to be performed on each sample, as specified in the WP.
Field Measurements	Indicate measurements and field instrument readings taken during the activity. If this information is recorded on a field form, the logbook should reference it, as appropriate.
Chain of Custody and Distribution	Indicate chain-of-custody information for each sample collected and indicate to whom the samples are transferred and the destination.
References	If appropriate, indicate references to other logs or forms, drawings, or photographs employed in the activity.
Narrative (including time and location)	Create a factual, chronological record of the team's activities throughout the day including the time and location of each activity. Include descriptions of general problems encountered and their resolution. Provide the names and affiliations of non-field team personnel who visit the site, request changes in activity, impact the work schedule, request information, or observe team activities. Record any visual or other observations relevant to the activity, the contamination source, or the sample itself. It should be emphasized that logbook entries are for recording data and chronologies of events. The logbook author must include observations and descriptive notations, taking care to be objective and recording no opinions or subjective comments unless appropriate.
Recorded by	Include the signature of the individual responsible for the entries contained in the logbook and referenced forms.

Standard Operating Procedure 3-03
Sample Labeling and Chain of Custody Procedures

1.0 PURPOSE

The purpose of this standard operating procedure is to establish standard protocols for all field personnel for use in maintaining field and sampling activity records, labeling samples, ensuring that proper sample custody procedures are utilized, and completing chain-of-custody/analytical request forms. If there are procedures from Resolution Consultants, state and/or federal that are not addressed in this Standard Operating Procedure (SOP) and are applicable to sample handling, storage, and shipping then those procedures may be added as an appendix to the project specific Sampling and Analysis Plan (SAP).

2.0 SCOPE

This procedure shall serve as management-approved professional guidance and is consistent with protocol in the Uniform Federal Policy-Quality Assurance Project Plan (DoD 2005). As professional guidance for specific activities, this procedure is not intended to obviate the need for professional judgment during unforeseen circumstances. Deviations from this procedure while planning or executing planned activities must be approved by either the Contract Task Order (CTO) Manager or the Quality Assurance (QA) Manager, and documented.

3.0 DEFINITIONS

3.1 Logbook

A logbook is a bound field notebook with consecutively numbered, water-repellent pages that is clearly identified with the name of the relevant activity, the person responsible for maintenance of the logbook, and the beginning and ending dates of the entries.

3.2 Chain-of-Custody

Chain-of-custody (COC) is documentation of the process of custody control. Custody control includes possession of a sample from the time of its collection in the field to its receipt by the analytical laboratory, and through analysis and storage prior to disposal.

4.0 RESPONSIBILITIES

The CTO Manager, or designee, is responsible for determining which team members shall record information in the field logbook and for checking sample logbooks and COC forms to ensure compliance with these procedures. The CTO Manager, or designee, shall review COC forms on a monthly basis at a minimum.

The CTO Manager and QA Manager or Technical Director are responsible for evaluating project compliance with the Project Procedures Manual. QA Manager or Technical Director is responsible for ensuring overall compliance with this procedure.

The Laboratory is responsible for reporting any sample documentation or COC problems to the CTO Manager, or designee, within 24 hours of sample receipt.

The Field Manager is responsible for ensuring that all field personnel follow these procedures. The Project Chemist, or designee, is responsible for verifying that the COC/analytical request forms have been completed properly and match the sampling and analytical plan. The Project Chemist, or designee, is responsible for notifying the laboratory, data managers, and data validators in writing if analytical request changes are required as a corrective action. These small changes are different from change orders, which involve changes to the scope of the subcontract with the laboratory and must be made in accordance with a respective contract. Field personnel are responsible for following these procedures while conducting sampling activities. Field personnel are responsible for recording pertinent data onto the COC forms to satisfy project requirements and for attesting to the accuracy of the entries by dated signature.

5.0 PROCEDURES

This procedure provides standards for labeling the samples, documenting sample custody, and completing COC/analytical request forms. The standards presented in this section shall be followed to ensure that samples collected are maintained for their intended purpose and that the conditions encountered during field activities are documented.

5.1 Sample Labeling

Affix a waterproof sample label with adhesive backing to each individual sample container. Record the following information with a waterproof marker on each label:

- Project name or number (optional)
- COC sample number
- Date and time of collection
- Sampler's initials
- Matrix (optional)
- Sample preservatives (if applicable)
- Analysis to be performed on sample (This shall be identified by the method number or name identified in the subcontract with the laboratory)

These labels may be obtained from the analytical laboratory or printed from a computer file onto adhesive labels.

5.2 Custody Procedures

For samples intended for chemical analysis, sample custody procedures shall be followed through collection, transfer, analysis, and disposal to ensure that the integrity of the samples is maintained. A description of sample custody procedures is provided below.

Sample Collection Custody Procedures

According to the EPA guidelines, a sample is considered to be in custody if one of the following conditions is met:

- It is in one's actual physical possession or view
- It is in one's physical possession and has not been tampered with (i.e., it is under lock or official seal)
- It is retained in a secured area with restricted access
- It is placed in a container and secured with an official seal such that the sample cannot be reached without breaking the seal

Place custody seals on shipping coolers (and sample jars, if required) if the cooler/container is to be removed from the sampler's custody. Place a minimum of two custody seals in such a manner that they must be broken to open the containers or coolers. Label the custody seals with the following information:

- Sampler's name or initials
- Date and time that the sample/cooler was sealed

These seals are designed to enable detection of sample tampering. An example of a custody seal is shown in Attachment 1.

Field personnel shall also log individual samples onto COC forms (carbon copy or computer generated) when a sample is collected. These forms may also serve as the request for analyses. Procedures for completing these forms are discussed in Section 0, indicating sample identification

number, matrix, date and time of collection, number of containers, analytical methods to be performed on the sample, and preservatives added (if any). The samplers will also sign the COC form signifying that they were the personnel who collected the samples. The COC form shall accompany the samples from the field to the laboratory. When a cooler is ready for shipment to the analytical laboratory, the person delivering the samples for transport will sign and indicate the date and time on the accompanying COC form. One copy of the COC form will be retained by the sampler and the remaining copies of the COC form shall be placed inside a self-sealing bag and taped to the inside of the cooler. Each cooler must be associated with a unique COC form. Whenever a transfer of custody takes place, both parties shall sign and date the accompanying carbon copy COC forms, and the individual relinquishing the samples shall retain a copy of each form. One exception is when the samples are shipped; the delivery service personnel will not sign or receive a copy because they do not open the coolers. The laboratory shall attach copies of the completed COC forms to the reports containing the results of the analytical tests. An example COC form is provided in Attachment 2.

5.3 Completing COC/Analytical Request Forms

COC form/analytical request form completion procedures are crucial in properly transferring the custody and responsibility of samples from field personnel to the laboratory. This form is important for accurately and concisely requesting analyses for each sample; it is essentially a release order from the analysis subcontract.

Attachment 2 is an example of a completed COC/analytical request form that may be used by field personnel, with box numbers identified and discussed in text below. Multiple copies may be tailored to each project so that much of the information described below need not be handwritten each time. Each record on the form (Attachment 2) is identified with a bold number corresponding to the instructions given below.

1. Record the project name, site location.

2. Record the site location, including the state.

3. Record the Contract Task Order number

4. Record the Resolution Consultants Task Order Manager

5. Record the sampler/site phone or cell number (if applicable).

6. Record the laboratory name where the samples were sent.

7. Record the requested turnaround time, in days. If a specific turnaround time is required to meet project objectives, but was not indicated on the laboratory service request form submitted to the purchasing department, the sampler, project manager, or site manager should contact the purchasing department so the laboratory contract can be modified.

8. Record the COC number that is defined by the sampler and should be unique throughout the project's history. An example would be to use the sampler's initials followed by the data. If multiple custodies are generated on a given day, use a unique sequential identifier. Example: CRC040105A, CRC040105B

9. Record the purchase order number provided by the purchasing department.

10. Record the page and total number of COC forms used in a shipment.

11. Record the project, and phase applicable to the sampling task.

12. Record the two-character code corresponding to the *chemical* preservation type, which is found on the bottom of the COC form. If no chemical preservation was added to the sample, the field should be left blank. Temperature preservation need not be documented at this location, but will be indicated elsewhere on the COC form (see 33).

13. List the requested analysis. Whenever possible, list the corresponding analytical method. (e.g., VOCs, 8260).

14. For Lab identification use only.

15. Record the full *unique* sample identification as detailed in the Site's Sampling and Analysis Plan.

16. Record the location identification, which is a shortened ID used for presentation and mapping, as detailed in the Site's Sampling and Analysis Plan.

17. Record the sample date using the format mm/dd/yy.

18. Record the sample time using the military format of hhmm.

19. Record the matrix code of the sample, which is located at the bottom of the COC form. The matrix code is a crucial element of the Navy's data management system. For simplicity, only typical matrix codes are listed on the bottom COC form, but below is a complete listing of all applicable Navy matrix codes:

Table 1
Navy Matrix Codes

Matrix Code	Matrix Code Description	Matrix Code	Matrix Code Description
AA	Ambient air	RK	Rock
AC	Composite air sample	SB	Bentonite
AD	Air - Drilling	SBS	Sub-surface soil (> 6")
AIN	Integrated air sample (under sample form of gas)	SC	Cement/Concrete
AQ	Air quality control matrix	SD	Drill cuttings - solid matrix
AQS	Aqueous	SE	Sediment
ASB	Asbestos	SEEP	SEEP
ASBF	Asbestos-Fibrous	SF	Filter sand pack
ASBNF	Asbestos-Non-Fibrous	SJ	Sand
AVE	Air-Vapor extraction, effluent	SK	Asphalt
AX	Air sample from unknown origin	SL	Sludge
BK	Brick	SM	Water filter (solid material used to filter water)
BS	Brackish sediment	SN	Miscellaneous solid/building materials
CA	Cinder ash	SO	Soil
CK	Caulk	SP	Casing (PVC, stainless steel, cast iron, iron pipe
CN	Container	SQ	Soil/Solid quality control matrix
CR	Carbon (usually for a remediation system)	SS	Scrapings
DF	Dust/Fallout	SSD	Subsurface sediment
DR	Debris/rubble	STKG	Stack gas
DS	Storm drain sediment	STPM	Stripper Tower Packing Media
DT	Trapped debris	SU	Surface soil (less than 6 inches)
EF	Emissions flux	SW	Swab or wipe
EW	Elutriate water	SZ	Wood
FB	Fibers	TA	Animal tissue
FL	Forest litter	TP	Plant tissue
GE	Soil gas effluent - stack gas (from system)	TQ	Tissue QC
GI	Soil gas influent (into system)	TX	Tissue
GL	Headspace of liquid sample	UNK	Unknown
GQ	Gaseous or Headspace QC	W	Water (not groundwater, unspecified)
GR	Gravel	WA	Drill cuttings - aqueous mix

PRINTED COPIES ARE UNCONTROLLED. CONTROLLED COPY IS AVAILABLE ON COMPANY INTRANET

Table 1
Navy Matrix Codes

Matrix Code	Matrix Code Description	Matrix Code	Matrix Code Description
GS	Soil gas	WB	Brackish Water
GT	Grit	WC	Drilling water (used for well construction)
IC	IDW Concrete	WD	Well development water
IDD	IDW Solid	WF	Freshwater (not groundwater)
IDS	IDW soil	WG	Ground water
IDW	IDW Water	WH	Equipment wash water
IW	Interstitial water	WI	Ground water influent (into system)
LA	Aqueous phase of a multiphase liquid/soil	WL	Leachate
LF	Product (floating or free)	WM	Marine water
LQ	Organic liquid quality control matrix	WN	Pore water
MA	Mastic	WO	Ocean water
MO	Mortar	WP	Drinking water
MR	Marine sediment	WQ	Water for QC samples
MS	Metal shavings	WR	Ground water effluent (from system)
NS	Near-surface soil	WS	Surface water
PA	Paper	WT	Composite groundwater sample
PC	Paint Chips	WU	Storm water
PP	Precipitate	WW	Waste water
RE	Residue		

Field QC blanks will require matrix codes that identify the type of blank associated with parent sample. Aqueous field QC blanks are not automatically identified with a matrix code of "WQ," indicating a water quality control blank; they are only identified with a matrix code of "WQ" if the associated samples are also aqueous. Trip blanks, field blanks, and equipment rinsate blanks collected in association with ***soil*** samples will be identified with a matrix code of "SQ," even though the actual matrix is aqueous, because the blanks were collected to assess potential contamination imparted during decontamination activities or transport of ***soil*** samples.

20. Record the sample type code, which is located at the bottom of the COC form. The sample type is a crucial element of the EQuIS data management system. For simplicity, only typical sample type codes are listed on the bottom of the COC form, but below is a list of all applicable Navy field sample type codes:

Table 2
Navy Sample Type Codes

Sample Type Code	Sample Type Code Description
AB	Ambient condition blank
BIOCON	Bioassay control sample
BS	Blank spike
BSD	Blank spike duplicate
EB	Equipment blank
EBD	Equipment blank/rinsate duplicate
FB	Field blank
FD	Field duplicate
FS	Field spike
IDW	Purge and rinsate water
LB	Lab Blank
LR	Lab Replicate
MB	Material blank
MIS	Multi-Incremental Sample
MS	Matrix spike
N	Normal (Regular)
PE	Performance evaluation
PURGE	Purge water sample
RD	Regulatory duplicate
SB	Source blank
SBD	Source blank duplicate
SCREEN	Screening Sample
SD	Matrix spike duplicate
SPLIT	Sample split
SRM	Standard reference material
TB	Trip Blank
TBD	Trip blank duplicate
TBR	Trip blank replicate

Field duplicate samples — Field duplicates will be identified using the format detailed in the Site's Sampling and Analysis Plan. However, field duplicates will also be differentiated from the parent sample on the chain-of-custody form. The parent sample will have a sample type code of "N," for normal environmental sample; while its duplicate will have a sample type code of "FD."

21. Record whether the sample is field filtered with a "Y" or not field filtered with an "N." If a project requires collecting samples for both total and dissolved constituents, the same sample and location ID is used for both (see 15 and 16); however, the sampler will indicate whether the sample is field filtered at this location on the COC form. This field must always be filled out; even when soil samples are collected (where "N" appropriately applies, in most cases).

22. Record the total number of containers that are submitted for all of the tests. This must add up to the total number of containers listed for each individual test in 23.

23. Record the number of containers for each test. Do not use Xs, rather indicate the number of containers submitted for each test listed in 14. For example, Sample 010MW007002 requires analysis for VOCs (8260), and SVOCs (8270). Record 3 under the VOC analysis and 2 under the SVOC (assuming 3 containers were submitted for VOCs and 2 were submitted for SVOCs). The total number of containers in this example is 5, which should be the total number of containers listed in 22. Extra containers submitted for matrix spike/matrix spike duplicates (MS/MSDs) will be appropriately recorded.

24. Indicate if extra sample volume was included for MS/MSD analysis using an "X." Samples to be used for MS/MSDs will use the same sample ID and location ID (see 15 and 16), but will be collected in triplicate, particularly for liquid samples, to ensure the analytical laboratory receives sufficient volume for the analyses.

25. Indicate if the samples should be held by the laboratory for future testing using an "X."

26. Record any field comments.

27. Reserved for laboratory comments.

28. Indicate the total number of coolers in each shipment. *Note*: When multiple coolers are submitted, each should contain a COC form.

29. Signature(s) of the person(s) relinquishing sample custody.

30. Signature(s) of the person(s) receiving sample custody.

31. Indicate whether the samples are iced, by checking the appropriate response.

32. Indicate the method of shipment (e.g., FedEx, hand-delivered, laboratory courier).

33. Record the airbill number when a commercial courier is used. This is particularly important when multiple coolers are sent in the same shipment or when the laboratory is sent the COC form in advance of receiving samples because it aids in tracking lost coolers.

34. Record the date the coolers were shipped.

PRINTED COPIES ARE UNCONTROLLED. CONTROLLED COPY IS AVAILABLE ON COMPANY INTRANET

COC forms tailored to each CTO can be drafted and printed onto multiple forms. This eliminates the need to rewrite the analytical methods column headers each time. It also eliminates the need to write the project manager, name, and number; QC Level; turnaround time; and the same general comments each time.

Complete one COC form per cooler. Whenever possible, place all volatile organic analyte vials into one cooler in order to reduce the number of trip blanks. Complete all sections and be sure to sign and date the COC form. One copy of the COC form must remain with the field personnel.

6.0 RECORDS

The COC/analytical request form shall be faxed or emailed approximately daily to the Project Chemist, or designee for verification of accuracy. Following the completion of sampling activities, the sample logbook and COC forms will be transmitted to the CTO Manager for storage in project files. The original COC/analytical request form shall be submitted by the laboratory along with the data delivered. Any changes to the analytical requests that are required shall be made in writing to the laboratory. A copy of this written change shall be sent to the data validators and placed in the project files. The reason for the change shall be included in the project files so that recurring problems can be easily identified.

7.0 HEALTH AND SAFETY

Not applicable.

8.0 REFERENCES

Department of Defense, United States (DoD). 2005. *Uniform Federal Policy for Quality Assurance Project Plans, Part 1: UFP-QAPP Manual*. Final Version 1. DoD: DTIC ADA 427785, EPA-505-B-04-900A. In conjunction with the U. S. Environmental Protection Agency and the Department of Energy. Washington: Intergovernmental Data Quality Task Force. March. On-line updates available at: http://www.epa.gov/fedfac/pdf/-ufp_qapp_v1_0305.pdf.

9.0 ATTACHMENTS

Attachment 1: Chain-of-Custody Seal

Attachment 2: Generic Chain-of-Custody/Analytical Request Form

Attachment 1
Chain-of-Custody Seal

EXAMPLE CHAIN-OF-CUSTODY SEAL

<table>
<tr><td rowspan="3">[LABORATORY]</td><td>SAMPLE NO.</td><td>DATE</td><td>SEAL BROKEN BY</td></tr>
<tr><td colspan="2">SIGNATURE</td><td>DATE</td></tr>
<tr><td colspan="3">PRINT NAME AND TITLE (Inspector, Analyst or Technician</td></tr>
</table>

Attachment 2

Example Chain-of-Custody/Analytical Request Form

RESOLUTION CONSULTANTS

CHAIN OF CUSTODY AND ANALYTICAL REQUEST RECORD

COC No. 8 | Page of 10

Project Name: 1 | PO No. 9 | Project No. 11 | Phase

Site Location: 2 | **Sample Analysis Requested** (*Enter number of containers for each test*)

CTO No. 3 | RC Task Order Manager: 4

Sampler/Site Phone# 5

Lab Name: 6 | Turnaround Time(specify): 7

Lab ID	Sample ID (sys_samp_code)	Location ID (sys_loc_code)	Date (mm/dd/yy)	Time (Military) (hhmm)	Matrix Code (1)	Sample Type (2)	Field Filtered (Y/N)	Total No. of Containers											Extra Volume for MS/MSD	HOLD
								(3)→	12											
									13											
14	15	16	17	18	19	20	21	22	23										24	25

Field **Comments:** 26

Lab **Comments:** 27

Sample Shipment and Delivery Details

Number of coolers in shipment: 28

Relinquished by (signature)	Date	Time	Received by (signature)	Date	Time
1 29			1 30		
2			2		
3			3		

Samples Iced?(check) 31 Yes___ No____

Method of Shipment: 32

Airbill No: 33

Date Shipped: 34

(1) AA=Ambient air, **AQ**=Air quality control, **ASB**=Asbestos, **CK**=Caulk, **DS**=Storm drain sediment, **GS**=Soil gas, **IC**=IDW Concrete, **IDD**=IDW Solid, **IDS**=IDW soil, **IDW**=IDW Water, **LF**=Free Product, **MA**=Mastic, **PC**=Paint Chips, **SC**=Cement/Concrete, **SE**=Sediment, **SL**=Sludge, **SO**=Soil, **SQ**=Soil/Solid quality control, **SSD**=Subsurface sediment, **SU**=Surface soil (<6 in), **SW**=Swab or wipe, **TA**=Animal tissue, **TP**=Plant tissue, **TQ**=Tissue quality control, **WG**=Ground water, **WL**=Leachate, **WO**=Ocean water, **WP**=Drinking water, **WQ**=Water quality control, **WR**=Ground water effluent, **WS**=Surface water, **WU**=Storm water, **WW**=Waste water

(2) Sample Type: AB=Ambient Blk, **EB**=Equipment Blk, **FB**=Field Blk, **FD**=Field Duplicate Sample, **IDW**=Investigative-Derived Waste, **MIS**=Incremental Sampling Methodology, **N**=Normal Environmental Sample, **TB**=Trip Blk

(3) Preservative added: HA=Hydrochloric Acid, **NI**=Nitric Acid, **SH**=Sodium Hydroxide, **SA**=Sulfuric Acid, **ME**=Methanol, **SB**=sodium bisulfate, **ST**=Sodium Thiosulfate If **NO preservative** added leave blank

Rev 5/12

Standard Operating Procedure SOP-03-04 (MS)
Sample Handling, Storage, and Shipping of Low Level Environmental Samples

1.0 PURPOSE

This Standard Operating Procedure (SOP) sets forth the methods for use by personnel engaged in handling, storing, and transporting low level environmental samples.

If there are procedures whether from Resolution Consultants, state and/or federal that are not addressed in this SOP and are applicable to sample handling, storage, and shipping, then those procedures may be added as an appendix to the project-specific Sampling and Analysis Plan.

2.0 SCOPE

In general, low-level environmental samples include drinking water, most groundwater and ambient surface water, soil, sediment, treated municipal and industrial wastewater effluent, biological specimens, and other samples not expected to be contaminated with high levels of hazardous materials. Samples collected from process wastewater streams, drums, bulk storage tanks, soil, sediment, or water samples from areas suspected of being highly contaminated may require shipment as dangerous goods and are not covered in this SOP, which is intended for handling and shipment of low-level environmental samples.

This procedure shall serve as management-approved professional guidance consistent with protocol in the Uniform Federal Policy-Quality Assurance Project Plan (DoD 2005). As professional guidance for specific activities, this procedure is not intended to obviate the need for professional judgment during unforeseen circumstances. Deviations from this procedure while planning or executing planned activities must be approved by either the Contract Task Order (CTO) Manager or the Quality Assurance (QA) Manager, and documented.

3.0 DEFINITIONS

None.

4.0 RESPONSIBILITIES

The CTO Manager, or designee, and the laboratory Project Manager are responsible for identifying instances of non-compliance with this procedure and ensuring that future sample transport activities are in compliance with this procedure.

The Field Manager is responsible for ensuring that all samples are shipped according to this procedure. Field personnel are responsible for the implementation of this procedure. Personnel that are involved in packaging, shipping, and receipt of samples must be aware of

PRINTED COPIES ARE UNCONTROLLED. CONTROLLED COPY IS AVAILABLE ON COMPANY INTRANET

Department of Transportation (DOT) regulations, know when to apply them, and know what procedures are needed to support this application.

The QA Manager or Technical Director is responsible for ensuring that sample handling, storage, and transport activities conducted during all CTOs are in compliance with this procedure.

5.0 PROCEDURES

5.1 Handling and Storage

Environmental samples should be packaged prior to shipment using the following procedures:

1. Allow sufficient headspace in all bottles (except volatile organic analysis containers with a septum seal) to compensate for any pressure and temperature changes (approximately 1 percent of the volume of the container).

2. Ensure that the lids on all bottles are tight (will not leak).

3. Glass bottles should be wrapped in bubble wrap — preferably sealable bubble wrap sample bags, if available. Place bottles in separate and appropriately-sized polyethylene bags and seal the bags.

4. Select a sturdy cooler in good repair. Secure and tape the drain plug with fiber or duct tape inside and outside. Line the cooler with a large heavy-duty plastic bag.

5. Place cushioning/absorbent material in the bottom of the cooler, if available, and then place the containers in the cooler with sufficient space to allow for the addition of cushioning between the containers.

6. Put "blue ice" (or ice that has been "double bagged" in heavy-duty polyethylene bags and properly sealed) on top of and/or between the containers. Fill all remaining space between the containers with bubble wrap or other suitable absorbent material.

7. Securely fasten the top of the large garbage bag with packaging tape.

8. Place the completed Chain-of-Custody (COC) Record into a sealed plastic bag, and tape the bag to the inner side of the cooler lid.

9. Close the cooler and securely tape (preferably with fiber tape) the top of the cooler shut. COC seals should be affixed to opposing sides of the cooler within the securing tape so that the cooler cannot be opened without breaking the seal.

5.2 Shipping

Follow all appropriate DOT regulations (e.g., 49 Code of Federal Regulations, Parts 171-179) for shipment of air, soil, water, and other samples. Elements of these procedures are summarized in the following subsections.

5.2.1 Non-hazardous Materials Shipment

If the samples are suspected to be non-hazardous based on previous site sample results, field screening results, or visual observations, if applicable, then samples may be shipped as non-hazardous.

When a cooler is ready for shipment to the laboratory, prepare standard air bill paperwork for shipment of the samples to the laboratory. Write the shippers tracking/airbill number on the COC form. Place two copies of the COC form inside a self-sealing bag and tape it to the inside of the cooler. Seal the cooler with waterproof tape and label it with "Fragile," "This-End-Up" (or directional arrows pointing up), or other appropriate notices. Affix a label stating the destination (laboratory address) to each cooler. Personnel should be aware of carrier weight or other policy restrictions.

5.2.1 Hazardous Materials Shipment

Shipment of Hazardous Material is not covered in this SOP; all samples handled under this SOP are anticipated to be non-hazardous or not dangerous goods. The CTO Manager, or designee, is responsible for determining if samples collected during a specific field investigation meet the definitions for dangerous goods. If a sample is collected of a material that is listed in the Dangerous Goods List, Section 4.2, of International Air Transport Authority (IATA), then that sample must be identified, packaged, marked, labeled, and shipped according to the instructions given for that material. If the composition of the collected sample(s) is unknown, and the project leader knows or suspects that it is a regulated material (dangerous goods), the sample may not be offered for air transport. If the composition and properties of a waste sample or a highly contaminated soil, sediment, or water sample are unknown, or only partially known, the sample may not be offered for air transport.

PRINTED COPIES ARE UNCONTROLLED. CONTROLLED COPY IS AVAILABLE ON COMPANY INTRANET

6.0 RECORDS

Maintain records as required by implementing these procedures.

7.0 HEALTH AND SAFETY

Avoid lifting heavy coolers with back muscles; instead, use leg muscles or dollies.

Wear proper gloves, such as blue nitrile and latex, as defined in the site-specific project health and safety plan, when handling sample containers to avoid contacting any materials that may have spilled out of the sample containers.

8.0 REFERENCES

International Air Transport Authority (IATA). Dangerous Goods Regulations
http://www.iata.org/whatwedo/cargo/dangerous_goods/Documents/DGR52-significant-changes.pdf

Department of Defense, United States (DoD). 2005. *Uniform Federal Policy for Quality Assurance Project Plans, Part 1: UFP-QAPP Manual*. Final Version 1. DoD: DTIC ADA 427785, EPA-505-B-04-900A. In conjunction with the U. S. Environmental Protection Agency and the Department of Energy. Washington: Intergovernmental Data Quality Task Force. March. On-line updates available at: http://www.epa.gov/fedfac/pdf/ufp_qapp_v1_0305.pdf.

9.0 ATTACHMENTS

None

Standard Operating Procedure SOP-3-05 (MS)
Investigation-Derived Waste Management

1.0 PURPOSE

The purpose of this procedure is to provide guidance for the minimization, handling, labeling, temporary storage, inventory, classification, and disposal of investigative derived waste (IDW) generated during all field activities, including:

- Personal protective equipment (i.e., gloves, Tyveks, spent respirators) and non-contaminated solid waste.
- Solid hazardous and non-hazardous waste (i.e., soil cuttings, drilling mud, contaminated equipment)
- Liquid hazardous and non-hazardous waste (i.e., purge/development water, rinse water from decontamination, free-phase product)

The waste handling procedures will vary according to project-specific and Facility requirements. Those specified in this SOP are unique to Naval Support Activity Mid-South in Millington, Tennessee. Additional procedures from Resolution Consultants, state and/or federal regulations that are not addressed in this Standard Operating Procedure (SOP) and that are applicable, may be added as an appendix to the project specific Sampling and Analysis Plan (SAP).

2.0 SCOPE

This procedure shall serve as management-approved professional guidance and is consistent with protocol in the Uniform Federal Policy-Quality Assurance Project Plan (DoD 2005). As professional guidance for specific activities, this procedure is not intended to obviate the need for professional judgment during unforeseen circumstances. Deviations from this procedure while planning or executing planned activities must be approved by both the Contract Task Order (CTO) Manager and the Quality Assurance (QA) Manager or Technical Director, and documented.

Solid, liquid, and PPE waste will be characterized for disposal through the use of client knowledge, laboratory analytical data created from soil or groundwater samples gathered during the field activities, and/or composite samples from individual containers.

All waste generated during field activities will be stored, transported, and disposed of according to applicable state, federal, and local regulations. While no hazardous waste generation is expected,

PRINTED COPIES ARE UNCONTROLLED. CONTROLLED COPY IS AVAILABLE ON COMPANY INTRANET.

any that is classified as hazardous will be disposed of at a licensed treatment storage and disposal facility.

All waste-disposal shall be carefully coordinated with NSA Mid-South Public Works personnel and the facility receiving the waste. Facilities receiving waste have specific requirements. Waste characterization shall be conducted to support both applicable regulations and Facility requirements.

3.0 RESPONSIBILITY

The CTO Manager is responsible for overseeing and ensuring that the IDW is properly managed in accordance with this SOP and any other facility or project-specific planning documents.

The Field Team Leader is responsible for understanding, overseeing, and documenting all field activities related to the implementation of this SOP.

4.0 PROCEDURES FOR WASTE DISPOSAL

The following procedures are to be used for handling IDW at NSA Mid-South

4.1 Soil and Mud Waste

Soil cuttings and drilling mud generated from drilling activities shall be collected in 55-gallon drums and staged next to the borehole/monitoring well until the conclusion of the drilling program. Drums shall be secured with bolt-on lids and labeled in accordance with this SOP. An inventory containing the source, volume, and description of generated soil/mud waste shall be logged in the field logbook. At the conclusion of the drilling program and consistent with recent RFI activities, NSA Mid-South Public Works personnel shall be contacted for access to SWMU 41 on the Southside of the facility where the soil waste will be thin-spread and temporarily staged while pending laboratory analysis. Straw bales will be placed around the soil placement area to ensure effective storm water controls. Soil and mud-waste should be spread to a thickness of 6-inches, after which one composite soil sample shall be collected for every 100 square feet of soil and submitted for total and toxicity characteristic leaching procedure (TCLP) analyses for the contaminants of concern. When placing soil cuttings and mud at SWMU 41, a minimum 60 foot buffer (100 feet is preferred) shall be made between the soil and top of the creek bank. The analytical data will be used to verify whether a potential exposure risk is posed and whether the soil meets the characteristic hazardous waste criteria. If the contaminants of concern are unknown or could be multiple, then samples shall be analyzed for a full analytical suite using both methods

(total and TCLP). Soil waste generated shall be analyzed for the minimum constituents: TPH, VOCs, and TCLP-VOCs, and TCLP-RCRA Metals.

Following confirmation that no soil risk is posed by contaminants in the soil and it meets the non-hazardous criteria characteristics, the plastic sheeting will be removed, the soil will be seeded and covered with straw. The SWMU 41 soil disposal area is shown on Figure 1 (Attachment 1).

A sketch of sample locations shall be made in the field logbook and upon receipt of the analytical data, a summary table of any detected contaminants shall be created with the appropriated screening/regulatory standards for documenting the final disposition of the soil IDW. A hits-only summary table and analytical data should be provided to the Navy in the project-specific report.

In the rare event waste is deemed hazardous or poses a residential risk based on detected contaminants, it must be containerized and arranged for disposed at an off-site facility. Transportation and disposal of any waste shall be coordinated directly with NSA Mid-South Public Works personnel who will sign all applications and waste manifests. NSA Mid-South Public Works personnel that should be contacted with all waste disposal issues are the following:

Debbie Zanot (Hazardous Waste Coord.)	901-874-5368
Jim Heide (alternate)	901-874-5367

Should waste or waste water analysis indicate that the material must be disposed of as hazardous waste, disposal shall be coordinated with Debbie Zanot: 901-874-5368.

4.2 Waste Water

Groundwater generated during monitoring well development, purging, and sampling has historically been released to the sanitary sewer after collecting waste profile data and authorization from the Millington Waste Water Treatment Plant. Typically, development/purge water is collected in totes, drums and/or portable storage tanks provided by the drilling contractor and then transferred to a larger holding tank provided by NSA Mid-South Public Works personnel. Public works personnel must be contacted in advance of sampling/drilling activities so holding tanks can be staged at a pre-arranged location next to a sanitary sewer inlet and near the field-work area. Any containers holding waste-water awaiting analysis must be labeled, properly secured, and staged until analysis

PRINTED COPIES ARE UNCONTROLLED. CONTROLLED COPY IS AVAILABLE ON COMPANY INTRANET.

is complete and authorization granted by the city of Millington to discharge the waste water to the sewer.

Before waste water can be discharged to the sanitary sewer, the City of Millington water treatment plant requires that the water-waste be characterized and data evaluated for the contaminants of concern. One water sample shall be collected per holding tank and analyzed for the contaminants of concern. Fisher Arnold Inc. is subcontracted by the waste water treatment plant for data evaluation and discharge approval. Upon receipt of the analytical data, approval for discharge must be requested via email from Mr. Jim Cox at jlcox@fisherarnold.com. The request will contain the following information:

- Analytical data for contaminant(s) of concern
- Volume of proposed discharge
- Schedule of anticipated discharge

Upon approval for discharging waste water, water will be released to the sanitary sewer and Public Works personnel will be contacted for the removal and transport of the emptied holding tank(s) to their designated storage area. Discharge dates, volumes, and analytical data shall be retained with the project files and incorporated into the appropriate project-specific reports. All copies of correspondence between RC and City of Millington shall be forwarded to the Public Works Environmental Division Director. In the event water waste is considered hazardous or approval to discharge to the sanitary sewer is not permitted by the city of Millington, the waste is to remain staged until alternate treatment and/or disposal options are evaluated with NSA Mid-South personnel.

4.3 Personal Protective Equipment (PPE)

Therefore, PPE and non-media solid waste (i.e., empty bags, supply containers, trash) that is generated during investigation activities shall be placed in plastic garbage bags and disposed of in designated dumpsters at NSA Mid-South. In the event PPE is generated from contact with suspect hazardous liquid or solid waste it shall be labeled, secured in a 55-gallon drum, and appropriately disposed pending the analytical results.

4.4 Soil Drum Handling

Soil and mud IDW shall be containerized using U.S. Department of Transportation-(DOT) approved drums. The drums shall be made of steel, have a 55-gallon capacity, be completely painted and

PRINTED COPIES ARE UNCONTROLLED. CONTROLLED COPY IS AVAILABLE ON COMPANY INTRANET.

have removable lids (i.e., United Nations Code 1A2 or 1H2). Lids must be able to securely closed. Recycled drums shall not be used for hazardous waste, polychlorinated byphenyls (PCBs) or other regulated shipments. For short-term storage of non-hazardous soil IDW, reconditioned drums are acceptable for use. Verify the integrity of the foam or rubber sealing ring located on the underside of some drum lids prior to sealing drums containing IDW liquids. If the ring is only partially attached to the drum lid, or if a portion of the ring is missing, select another drum lid with a sealing ring that is in sound condition.

To prepare IDW drums for labeling, wipe clean the outer wall surfaces and drum lids of all material that might prevent legible and permanent labeling. If potentially contaminated material adheres to the outer surface of a drum, wipe that material from the drum, and segregate the paper towel or rag used to remove the material with visibly soiled PPE and disposable sampling equipment. Label all IDW drums and place them on pallets for transport.

4.5 Drum Labeling

Two general conditions exist for labeling drums: 1) waste characteristics are known to be either hazardous or nonhazardous from previous studies or project-specific data; or 2) waste characteristics are unknown until additional data are obtained. In most cases waste generated in environmental investigations can be assumed to be non-hazardous; however, if waste is suspected to contain elevated contaminant mass based on staining, odors, or other indications, then the waste should be segregated and labeled while pending analysis followed with the below drum labeling instructions. In no case should waste be thin-spread at SWMU 41 (as discussed in Section 4.1) if there is any indication that contamination may be present in the waste.

The following labeling requirements shall be adhered to for nonhazardous waste containers that are generated and pending transportation/disposal:

- Description and SWMU/AOC originating location of waste (i.e., purge water, soil cuttings); include "awaiting analysis" in the description
- Contact information (i.e., contact name and telephone number)
- Date when the waste was first generated

The following information shall be placed on all hazardous waste labels:

- Description and originating location of waste (i.e., "SWMU name" and "purge water" or "soil cuttings"); include "awaiting analysis" in the description
- Generator information (i.e., name, address, contact telephone number)
- EPA identification number (supplied by on-site client representative)
- Date when the waste was first accumulated

If waste data is suspected of being contaminated then the drums should be staged and labeled with the words "waste characterization pending analysis" and the following information included on the label:

- Description and originating location of waste include "awaiting analysis" in the description
- Contact information (i.e., contact name and telephone number)
- Date when the waste was first accumulated

Once the waste has been characterized, the label should be changed as appropriate for a nonhazardous or hazardous waste. If the project-specific planning documents do not specify the sampling frequency, one composite sample shall be collected per set of drums generated at each monitoring well/soil boring.

Waste labels should be constructed of a weatherproof material and filled out with a permanent marker to prevent being washed off or becoming faded by sunlight. Waste labels shall be placed on the side of the container, since the top is more subject to weathering. However, when multiple containers are accumulated together, labels must also be placed on the top of the containers to facilitate organization and disposal.

4.6 Waste Accumulation On-Site

Solid, liquid, or PPE wastes generated during investigation activities that are classified as hazardous shall not be accumulated on-site longer than 90 days. All waste that is deemed as hazardous or drummed non-hazardous waste that requires off-site shipment, temporarily will be staged at Building 1694 while pending transport and disposal. Any waste requiring offsite disposal shall be coordinated with Ms. Debbie Zanot (ph. 901-874-5368), the NSA Mid-South hazardous waste coordinator. At a minimum, the following requirements for the hazardous waste storage area must be implemented:

- Proper hazardous waste signs shall be posted as required by any state or federal statutes that may govern the labeling of waste
- Secondary containment to contain spills
- Spill containment equipment must be available
- Fire extinguisher
- Adequate aisle space for unobstructed movement of personnel

RC will generate an inventory of all drums staged at 1694 at the conclusion of field activities and their classification (hazardous versus non-hazardous) and quantity will be provided to NSA Mid-South Public Works Environmental Division Director. Any transport of waste classified as hazardous will be conducted only by a state-certified hazardous waste hauler. Typically, the facility receiving any waste can coordinate a hauler to transport the waste. Shipped hazardous waste shall be disposed of in accordance with all RCRA/USEPA requirements. All waste manifests or bills of lading will be signed by the NSA Mid-South Public Works Environmental Division Director and copied to the project file.

5.0 REGULATORY REQUIREMENTS

The following federal and state regulations shall be used as resources for determining waste characteristics and requirements for waste storage, transportation, and disposal:

- Code of Federal Regulations (CFR), Title 40, Part 261
- CFR, Title 49, Parts 172, 173, 178, and 179

6.0 RECORDS

All containerized IDW shall be documented in the field logbook.

7.0 REFERENCES

Department of Defense, United States (DoD). 2005. *Uniform Federal Policy for Quality Assurance Project Plans, Part 1: UFP-QAPP Manual*. Final Version 1. DoD: DTIC ADA 427785, EPA-505-B-04-900A. In conjunction with the U. S. Environmental Protection Agency and the Department of Energy. Washington: Intergovernmental Data Quality Task Force. March. On-line updates available at: http://www.epa.gov/fedfac/pdf/ufp_qapp_v1_0305.pdf

Attachments

Attachment 1: Figure 1 — Soil/Mud Waste Disposal Area; Former SWMU 41 at NSA Mid-South Southside

Attachment 2: Form 5530 — NAVSUPPACT Mid-South Building CAC Access/Issue Application

PRINTED COPIES ARE UNCONTROLLED. CONTROLLED COPY IS AVAILABLE ON COMPANY INTRANET.

Figure 1 — Soil/Mud Waste Disposal Area; Former SWMU 41 at NSA Mid-South Southside

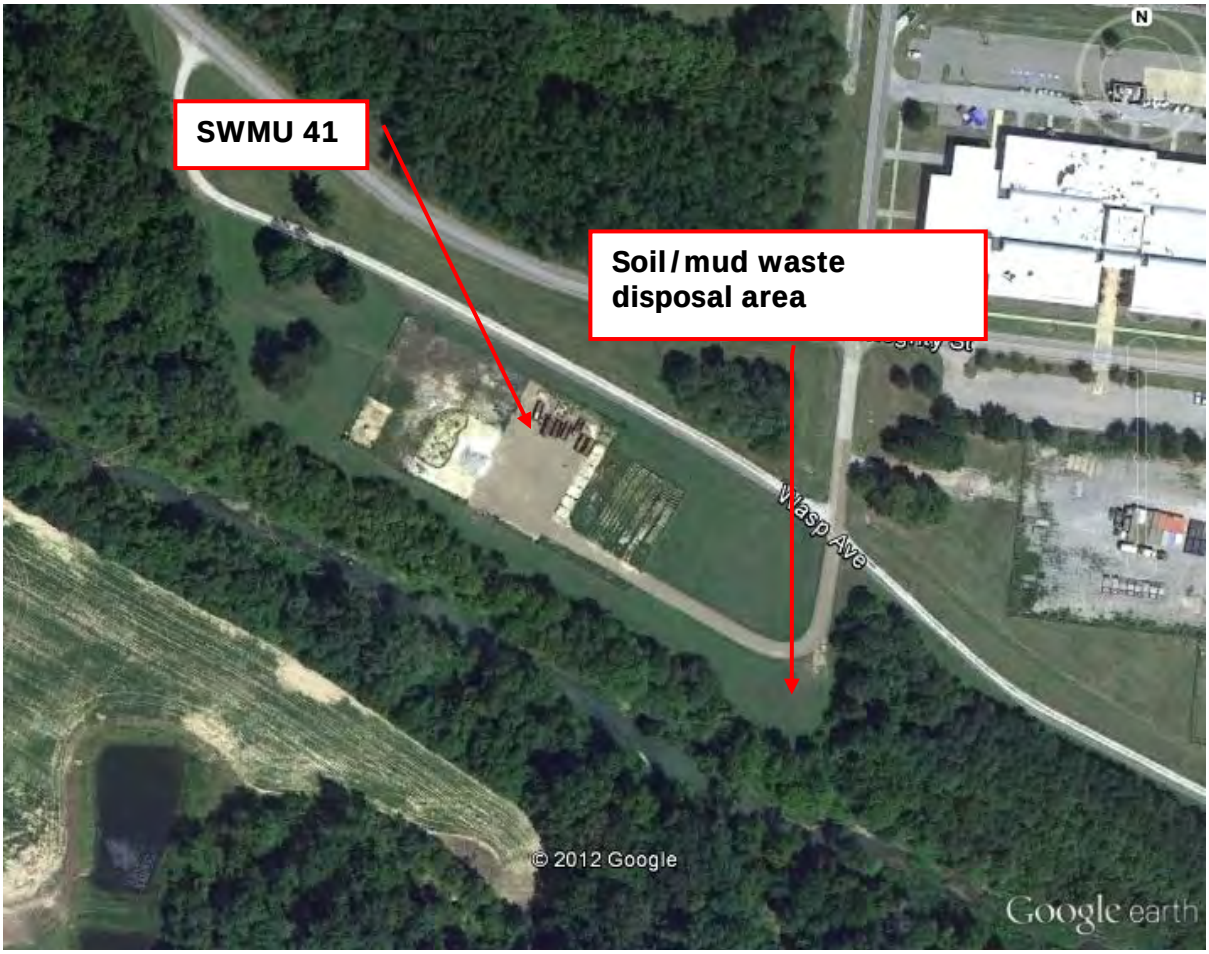

Attachment 2: Form 5530 for Base Access (Southside)

NAVSUPPACT MID-SOUTH BUILDING CAC ACCESS/ISSUE APPLICATION
From: Robert Morrison **To:** Email to MILL_BADGE@NAVY.MIL **Subj:** Request for Identification Badge, and access to restricted spaces

APPLICANT INFORMATION			
Name (Last, First, Middle Initial)	Gender	Citizenship	SSN:
Command/Dep. NAVFAC/PWD MIDSOUTH	Title:		Date of Birth:
Race:	State Drivers License#:		

Height:	Weight:	Hair Color:	Eye Color:	Work Phone:

Company Name: (Contractors):	Contract Exp Date:	Contract Number:

COMMAND ACCESS REQUEST		
☒ New Access	☐ Access Modification	☐ Non-CAC Contractor

REASON FOR BADGE ISSUANCE		
☒ Initial Issue	☐ Renewal	☐ Replacement

EXTERNAL BUILDING ACCESS:
External Building(s), Days, and Time for access(EX: 455, Mon-Fri, 0600-1800) Building 455, Mon. — Fri, 0600 — 2400

RESTRICTED SPACE(s) ACCESS REQUIRED:
Building(s), Room Number, Days, Time for access(EX: 769, Room 188, 24 X 7)

ONLY COMMAND APPOINTED AUTHORIZED PERSONNEL CAN SIGN REQUEST	
Authorizing Official: (Last Name, First and Middle Initial)	Telephone Number:
Authorizing Official Signature: (N/A when emailed, verified by email from authorizing official)	Date:

Privacy Act Statement

AUTHORITY: 5 U.S.C. 301; EO 12356; EO 9397
PRINCIPAL PURPOSE: To facilitate verification of a personnel security clearance for an individual applying for building access in connection with their livelihood or official duties.
ROUTINE USES; Information may be furnished to Federal, state, or local agencies for regulatory and law enforcement purposes.
DISCLOSURE: Voluntary; however, refusal to furnish requested information may result in inability to verify essential personal information and approve requested building pass application.

Standard Operating Procedure SOP-3-06
Equipment Decontamination

1.0 PURPOSE

This standard operating procedure (SOP) describes methods of equipment decontamination for use during site activities by field personnel. If there are procedures from Resolution Consultants, state and/or federal that are not addressed in this SOP and are applicable to equipment decontamination, then those procedures may be added as an appendix to the project-specific Sampling and Analysis Plan (SAP).

2.0 SCOPE

This procedure shall serve as management-approved professional guidance for and is consistent with protocol in the Uniform Federal Policy-Quality Assurance Project Plan (DoD 2005). As professional guidance for specific activities, this procedure is not intended to obviate the need for professional judgment during unforeseen circumstances. Deviations from this procedure while planning or executing planned activities must be approved by both the Contract Task Order (CTO) Manager and the Quality Assurance (QA) Manager.

3.0 DEFINITIONS

3.1 Logbook

A logbook is a bound field notebook with consecutively numbered, water-repellent pages that is clearly identified with the name of the relevant activity, the person assigned responsibility for maintenance of the logbook, and the beginning and ending dates of the entries.

4.0 RESPONSIBILITIES

The CTO Manager is responsible for identifying instances of non-compliance with this procedure and ensuring that decontamination activities comply with this procedure. The CTO Manager is responsible for ensuring that all personnel involved in equipment decontamination shall have the appropriate education, experience, and training to perform their assigned tasks.

The QA Manager or CTO Manager is responsible for ensuring overall compliance with this procedure. The Field Manager is responsible for ensuring that all field equipment is decontaminated according to this procedure. Field personnel are responsible for the implementation of this procedure.

5.0 PROCEDURES

Decontamination of equipment used in soil/sediment sampling, groundwater monitoring, well drilling and well development, as well as equipment used to sample groundwater, surface water,

PRINTED COPIES ARE UNCONTROLLED. CONTROLLED COPY IS AVAILABLE ON COMPANY INTRANET

sediment, waste, wipe, asbestos, and unsaturated zone is necessary to prevent cross-contamination and to maintain the highest integrity possible in collected samples. Planning a decontamination program requires consideration of the following factors:

- The location where the decontamination procedures will be conducted
- The types of equipment requiring decontamination
- The frequency of equipment decontamination
- The cleaning technique and types of cleaning solutions appropriate to the contaminants of concern
- The method for containing the residual contaminants and wash water from the decontamination process
- The use of a quality control measure to determine the effectiveness of the decontamination procedure

The following subsection describes standards for decontamination, including the frequency of decontamination, cleaning solutions and techniques, containment of residual contaminants and cleaning solutions, and effectiveness.

5.1 Decontamination Area

Select an appropriate location for the decontamination area at a site based on the ability to control access to the area, the ability to control residual material removed from equipment, the need to store clean equipment, and the ability to restrict access to the area being investigated. Locate the decontamination area an adequate distance away and upwind from potential contaminant sources to avoid recontamination of clean equipment.

5.2 Types of Equipment

Drilling equipment that must be decontaminated includes drill bits, auger sections, drill-string tools, drill rods, split barrel samplers, tremie pipes, clamps, hand tools, and steel cable. Decontamination of monitoring well development and groundwater sampling equipment includes submersible pumps, bailers, interface probes, water level meters, bladder pumps, airlift pumps, peristaltic pumps,

and lysimeters. Other sampling equipment that requires decontamination includes, but is not limited to, hand trowels, hand augers, slide hammer samplers, shovels, stainless-steel spoons and bowls, soil sample liners and caps, wipe sampling templates, composite liquid waste samplers, and dippers. Equipment with a porous surface, such as bailing twine, rope, cloth hoses, and wooden blocks cannot be thoroughly decontaminated and shall be properly disposed after one use.

5.3 Frequency of Equipment Decontamination

Decontaminate down-hole drilling equipment and equipment used in monitoring well development and purging prior to initial use and between each borehole or well. Down-hole drilling equipment, however, may require more frequent cleaning to prevent cross-contamination between vertical zones within a single borehole. When drilling through a shallow contaminated zone and installing a surface casing to seal off the contaminated zone, decontaminate the drilling tools prior to drilling deeper.

Initiate groundwater sampling from the monitoring well where the least contamination is suspected. Decontaminate groundwater, surface water, and soil sampling devices prior to initial use and between collection of each sample to prevent the possible introduction of contaminants into successive samples.

5.4 Cleaning Solutions and Techniques

Decontamination is accomplished using a variety of techniques and fluids. The preferred method of decontaminating major equipment, such as drill bits, augers, drill string, and pump drop-pipe, is steam cleaning. To steam clean, use a portable, high-pressure steam cleaner equipped with a pressure hose and fittings. For this method, thoroughly steam wash equipment, and rinse it with potable tap water to remove particulates and contaminants.

A rinse decontamination procedure is acceptable for small equipment such as bailers, water level meters, new and re-used soil sample liners, and hand tools. The decontamination procedure shall consist of the following:

1. Wash with a non-phosphate detergent (alconox, liquinox, or other suitable detergent) and potable water solution.

2. Rinse with potable water.

PRINTED COPIES ARE UNCONTROLLED. CONTROLLED COPY IS AVAILABLE ON COMPANY INTRANET

3. Spray with laboratory-grade isopropyl alcohol or other appropriate solvent (if used).

4. Rinse with deionized or distilled water.

5. Spray with deionized or distilled water. If possible, disassemble equipment prior to cleaning. Add a second wash at the beginning of the process if equipment is very soiled.

Isopropyl alcohol may contribute to acetone formation; therefore, its use in decontamination of equipment used for sampling volatile organic compounds should be considered. Solvents other than isopropyl alcohol may be used, depending upon the contaminants involved. For example, if polychlorinated biphenyls or chlorinated pesticides are contaminants of concern, hexane may be used as the decontamination solvent. However, if samples are also to be analyzed for volatile organics, hexane shall not be used. In addition, some decontamination solvents have health effects that must be considered. Decontamination water shall consist of distilled or deionized water. Steam-distilled water shall not be used in the decontamination process as this type of water usually contains elevated concentrations of metals. Decontamination solvents to be used during field activities will be specified in CTO work plan (WP) or site-specific SAP.

Decontaminating submersible pumps requires additional effort because internal surfaces become contaminated during usage. Decontaminate these pumps by washing and rinsing the outside surfaces using the procedure described for small equipment or by steam cleaning. Decontaminate the internal surfaces by recirculating fluids through the pump while it is operating. This recirculation may be done using a relatively long (typically 4-feet) large-diameter pipe (4-inch or greater) equipped with a bottom cap. Fill the pipe with the decontamination fluids, place the pump within the capped pipe, and operate the pump while recirculating the fluids back into the pipe. The decontamination sequence shall include:

1. Detergent and potable water,
2. Potable water rinse,
3. Potable water rinse, and
4. Deionized water rinse. Change the decontamination fluids after each decontamination cycle.

Rinse equipment used for measuring field parameters, such as pH (indicates the hydrogen ion concentration — acidity or basicity), temperature, specific conductivity, and turbidity with deionized

or distilled water after each measurement. Also wash new, unused soil sample liners and caps with a fresh detergent solution and rinse them with potable water followed by distilled or deionized water to remove any dirt or cutting oils that might be on them prior to use.

5.5 Containment of Residual Contaminants and Cleaning Solutions

A decontamination program for equipment exposed to potentially hazardous materials requires a provision for catchment and disposal of the contaminated material, cleaning solution, and wash water.

When contaminated material and cleaning fluids must be contained from heavy equipment, such as drill rigs and support vehicles, the area must be properly floored, preferably with a concrete pad that slopes toward a sump pit. If a concrete pad is impractical, planking can be used to construct solid flooring that is then covered by a nonporous surface and sloped toward a collection sump. If the decontamination area lacks a collection sump, use plastic sheeting and blocks or other objects to create a bermed area for collection of equipment decontamination water. Situate smaller items such as auger flights on metal stands or other similar equipment during decontamination to prevent contact with fluids generated by previous equipment decontamination. Collect decontamination fluids contained within the bermed area and store them in secured containers such as Department of Transportation (DOT)-approved drums, until their disposition is determined by laboratory analytical results.

Store clean equipment in a separate location to prevent recontamination.

Use wash buckets or tubs to catch fluids from the decontamination of lighter-weight drilling equipment and hand-held sampling devices. Collect the decontamination fluids and store them onsite in secured containers, such as DOT-approved drums, until their disposition is determined by laboratory analytical results.

5.6 Effectiveness of Decontamination Procedures

A decontamination program must incorporate quality control measures to determine the effectiveness of cleaning methods. Quality control measures typically include collection of equipment blank samples or wipe testing. Equipment blanks consist of analyte-free water that has been poured over or through the sample collection equipment after its final decontamination rinse. Wipe testing is performed by wiping a cloth over the surface of the equipment after cleaning. These quality control measures provide "after-the fact" information that may be useful in

determining whether or not cleaning methods were effective in removing the contaminants of concern.

6.0 RECORDS

Describe the decontamination process in the field logbook.

7.0 HEALTH AND SAFETY

It is the responsibility of the Site Safety Office (SSO) to set up the site zones (i.e., exclusion, transition, and clean) and decontamination areas. Generally, the decontamination area is located within the transition zone, upwind of intrusive activities, and serves as the washing area for both personnel and equipment to minimize the spread of contamination into the clean zone. For equipment, a series of buckets are set up on a visqueen-lined bermed area. Separate spray bottles containing solvents (if required) and distilled water are used for final rinsing of equipment. Depending on the nature of the hazards and the site location, decontamination of heavy equipment, such as augers, pump drop pipe, and vehicles, may be accomplished using a variety of techniques.

Personnel responsible for equipment decontamination must adhere to the site-specific health and safety plan (HASP) and must wear the personal protective equipment (PPE) specified in the site-specific HASP. Generally this includes, at a minimum, Tyvek coveralls, steel-toed boots with boot covers or steel-toed rubber boots, safety glasses, American National Standards Institute-standard hard hats, and hearing protection (if heavy equipment is in operation). Air monitoring by the SSO may result in an upgrade to the use of respirators and cartridges in the decontamination area; therefore, this equipment must be available onsite. If safe alternatives are not achievable, discontinue site activities immediately.

In addition to the aforementioned precautions, employ the following safe work practices:

Chemical Hazards Associated With Equipment Decontamination

- Avoid skin contact with and/or incidental ingestion of decontamination solutions and water.
- Utilize PPE as specified in the site-specific HASP to maximize splash protection.
- Refer to material safety data sheets, safety personnel, and/or consult sampling personnel regarding appropriate safety measures (i.e., handling, PPE including skin and respiratory).
- Take the necessary precautions when handling detergents and reagents.

PRINTED COPIES ARE UNCONTROLLED. CONTROLLED COPY IS AVAILABLE ON COMPANY INTRANET

Physical Hazards Associated With Equipment Decontamination

- To avoid possible back strain, it is recommended to raise the decontamination area 1 to 2 feet above ground level.

- To avoid heat stress, over exertion, and exhaustion, it is recommended to rotate equipment decontamination among all site personnel.

- Take necessary precautions when handling field sampling equipment.

8.0 REFERENCES

Department of Defense, United States (DoD). 2005. *Uniform Federal Policy for Quality Assurance Project Plans, Part 1: UFP-QAPP Manual*. Final Version 1. DoD: DTIC ADA 427785, EPA-505-B-04-900A. In conjunction with the U.S. Environmental Protection Agency and the Department of Energy. Washington: Intergovernmental Data Quality Task Force. March. On-line updates available at:http://www.epa.gov/fedfac/pdf/-ufp_qapp_v1_0305.pdf.

9.0 ATTACHMENTS

None.

Standard Operating Procedure SOP-3-08 (MS)
Soil Classification

1.0 PURPOSE

This section sets forth standard operating procedures for soil classification. If there are procedures from Resolution Consultants, state and/or federal that are not addressed in this Standard Operating Procedure (SOP) and are applicable to soil and rock classification then those procedures may be added as an appendix to the project specific Sampling and Analysis Plan (SAP).

2.0 SCOPE

This procedure shall serve as management-approved professional guidance and is consistent with protocol in the Uniform Federal Policy-Quality Assurance Project Plan (DoD 2005). As professional guidance for specific activities, this procedure is not intended to obviate the need for professional judgment during unforeseen circumstances. Deviations from this procedure while planning or executing planned activities must be approved by either the Contract Task Order (CTO) Manager or the Quality Assurance (QA) Manager, and documented.

3.0 DEFINITIONS

None.

4.0 RESPONSIBILITIES

The CTO Manager, or designee, is responsible for ensuring that these standard soil and rock classification procedures are followed and that a qualified individual conducts or supervises the projects. A qualified individual is defined as a person with a degree in geology, hydrogeology, soil science, or geotechnical/civil engineering with at least 1 year of experience classifying soil. Supervision is defined as onsite and continuous monitoring of the individual conducting soil classification. The CTO Manager is responsible for ensuring that all personnel involved in soil and rock classification shall have the appropriate education, experience, and training to perform their assigned tasks. The CTO Manager is responsible for reviewing copies of the field boring log forms on a monthly basis at a minimum.

QA Manager or Technical Director is responsible for ensuring overall compliance with this procedure.

The Field Manager is responsible for ensuring that all project field staff follow these procedures.

Field personnel are responsible for the implementation of this procedure.

PRINTED COPIES ARE UNCONTROLLED. CONTROLLED COPY IS AVAILABLE ON COMPANY INTRANET.

5.0 SOIL CLASSIFICATION

The basic purpose of the classification of soil is to thoroughly describe the physical characteristics of the sample and to classify it according to an appropriate soil classification system. The Unified Soil Classification System (USCS) was developed so that soils could be described on a common basis by different investigators and serve as a "shorthand" description of soil. A classification of a soil in accordance with the USCS includes not only a group symbol and name, but also a complete word description.

Describing soil on a common basis is essential so that soil described by different site qualified personnel is comparable. Site individuals describing soil as part of site activities *must* use the classification system described herein to provide the most useful geologic database for all present and future subsurface investigations and remedial activities.

The site geologist or other qualified individual shall describe the soil and record the description in a boring log or logbook. The essential items in any written soil description are as follows:

- Classification group name (e.g., silty sand)
- Color, moisture, and odor
- Range of particle sizes and maximum particle size
- Approximate percentage of boulders, cobbles, gravel, sand, and fines
- Plasticity characteristics of the fines
- In-place conditions, such as consistency, density, and structure
- USCS classification symbol

The USCS serves as ”shorthand“ for classifying soil into 15 basic groups:

- GW[1] Well graded (poorly sorted) gravel (>50 percent gravel, <5percent fines)
- GP[1] Poorly graded (well sorted) gravel (>50percent gravel, <5percent fines)
- GM[1] Silty gravel (>50 percent gravel, >15 percent silt)
- GC[1] Clayey gravel (>50 percent gravel, >15 percent clay)
- SW[1] Well graded (poorly sorted) sand (>50 percent sand, <5 percent fines)
- SP[1] Poorly graded (well sorted) sand (>50 percent sand, <5 percent fines)

[1] If percentage of fine is 5 percent to 15 percent, a dual identification shall be given (e.g., a soil with more than 50 percent poorly sorted gravel and 10 percent clay is designated GW-GC.

PRINTED COPIES ARE UNCONTROLLED. CONTROLLED COPY IS AVAILABLE ON COMPANY INTRANET.

- SM[1] Silty sand (>50 percent sand, >15 percent silt)
- SC[1] Clayey sand (>50 percent sand, >15 percent clay)
- ML[2] Inorganic, low plasticity silt (slow to rapid dilatancy, low toughness, and plasticity)
- CL[2] Inorganic, low plasticity (lean) clay (no or slow dilatancy, medium toughness and plasticity)
- MH[2] Inorganic elastic silt (no to slow dilatancy, low to medium toughness and plasticity)
- CH[2] Inorganic, high plasticity (fat) clay (no dilatancy, high toughness, and plasticity)
- OL Organic low plasticity silt or organic silty clay
- OH Organic high plasticity clay or silt
- PT Peat and other highly organic soil

Figure 1 defines the terminology of the USCS. Flow charts presented in Figure 2 and Figure 3 indicate the process for describing soil. The particle size distribution and the plasticity of the fines are the two properties of soil used for classification. In some cases, it may be appropriate to use a borderline classification (e.g., SC/CL) if the soil has been identified as having properties that do not distinctly place the soil into one group.

5.1 Estimation of Particle Size Distribution

One of the most important factors in classifying a soil is the estimated percentage of soil constituents in each particle size range. Being proficient in estimating this factor requires extensive practice and frequent checking. The steps involved in determining particle size distribution are listed below:

1. Select a representative sample (approximately 1/2 of a 6-inch long by 2.5-inch diameter sample liner).

2. Remove all particles larger than 3 inches from the sample. Estimate and record the percent by volume of these particles. Only the fraction of the sample smaller than 3 inches is classified.

[2] If the soil is estimated to have 15 percent to 25 percent sand or gravel, or both, the words "with sand" or "with gravel" (whichever predominates) shall be added to the group name (e.g., clay with sand, CL; or silt with gravel, ML). If the soil is estimated to have 30 percent or more sand or gravel, or both, the words "sandy" or "gravely" (whichever predominates) shall be added to the group name (e.g., sandy clay, CL). If the percentage of sand is equal to the percent gravel, use "sandy."

PRINTED COPIES ARE UNCONTROLLED. CONTROLLED COPY IS AVAILABLE ON COMPANY INTRANET.

DEFINITION OF TERMS

MAJOR DIVISIONS			SYMBOLS	TYPICAL DESCRIPTIONS
COARSE GRAINED SOILS More Than Half of Material is Larger Than No. 200 Sieve Size	GRAVELS More Than Half of Coarse Fraction is Smaller Than No. 4 Sieve	CLEAN GRAVELS (Less than 6% Fines)	GW	Well graded gravels, gravel-sand mixtures, little or no fines
			GP	Poorly graded gravels, gravel-sand mixtures, little or no fines
		GRAVELS With Fines	GM	Silty gravels, gravel-sand-silt mixtures, non-plastic fines
			GC	Clayey gravels, gravel-sand-clay mixtures, plastic fines
	SANDS More Than Half of Coarse Fraction is Smaller Than No. 4 Sieve	CLEAN SANDS (Less than 6% Fines)	SW	Well graded sands, gravelly sands, little or no fines
			SP	Poorly graded sands, gravelly sands, little or no fines
		SANDS With Fines	SM	Silty sands, sand-silt mixtures, non-plastic fines
			SC	Clayey sands, sand-clay mixtures, plastic fines
FINE GRAINED SOILS More Than Half of Material is Smaller Than No. 200 Sieve Size	SILTS AND CLAYS Liquid Limit is Less Than 50%		ML	Inorganic silts, rock flour, fine sandy silts or clays, and clayey silts with non- or slightly-plastic fines
			CL	Inorganic clays of low to medium plasticity, gravelly clays, silty clays, sandy clays, lean clays
			OL	Organic silts and organic silty clays of low plasticity
	SILTS AND CLAYS Liquid Limit is Greater Than 50%		MH	Inorganic silts, micaceous or diatomaceous fine sandy or silty soils, elastic silts, clayey silt
			CH	inorganic clays of high plasticity, fat clays
			OH	Organic clays of medium to high plasticity, organic silts
HIGHLY ORGANIC SOILS			PT	Peat and other highly organic soils

GRAIN SIZES

SILTS AND CLAYS	SAND			GRAVEL		COBBLES	BOULDERS
	FINE	MEDIUM	COARSE	FINE	COARSE		

200 40 10 4 3/4" 3" 12"

U.S. STANDARD SERIES SIEVE — CLEAR SQUARE SIEVE OPENINGS

Figure 1: Unclassified Soil Classification System (USCS)

PRINTED COPIES ARE UNCONTROLLED. CONTROLLED COPY IS AVAILABLE ON COMPANY INTRANET.

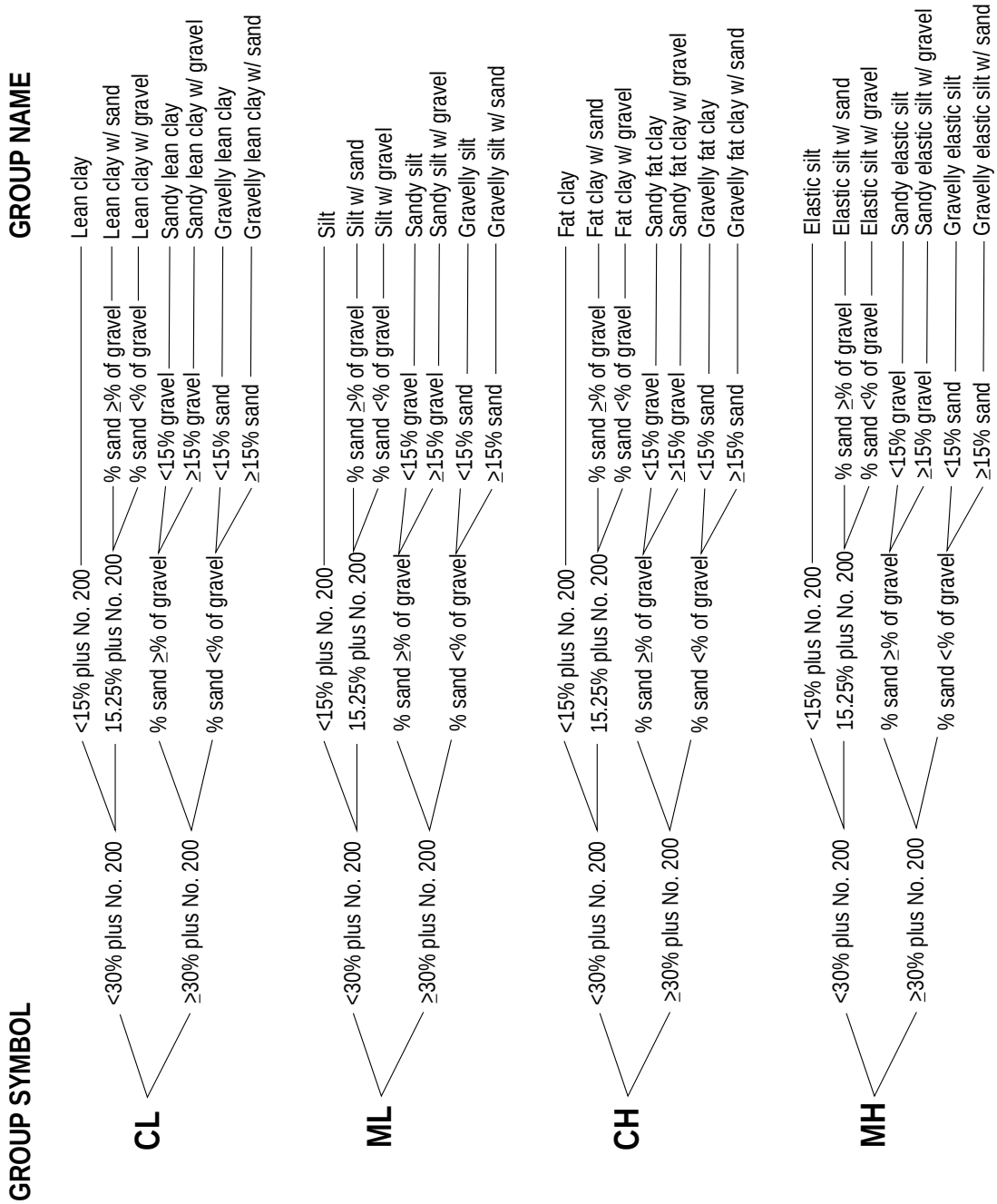

Figure 2: Flow Chart for Fine Grain Soil Classification

PRINTED COPIES ARE UNCONTROLLED. CONTROLLED COPY IS AVAILABLE ON COMPANY INTRANET.

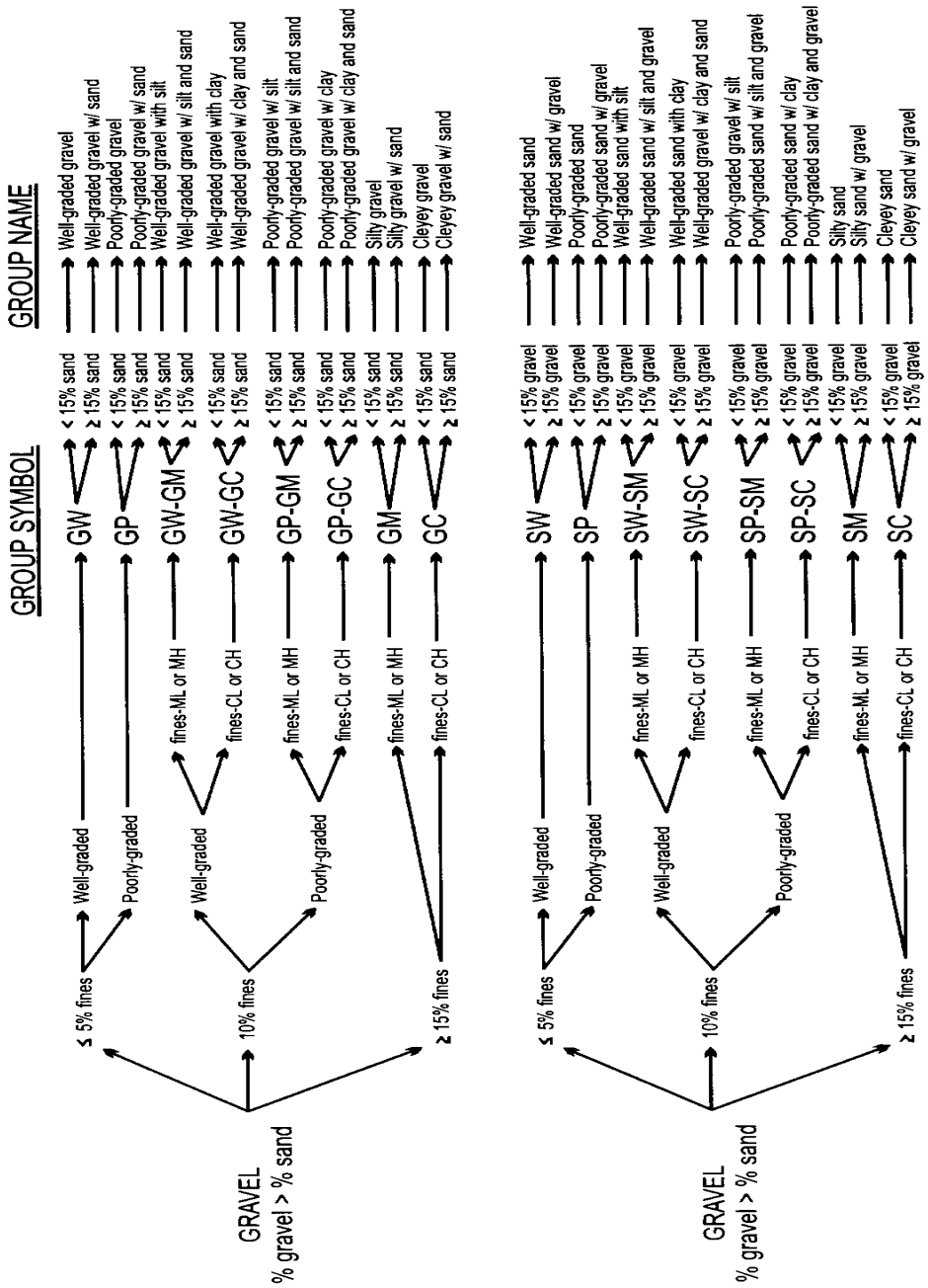

Figure 3: Flow Chart for Soil with Gravel

PRINTED COPIES ARE UNCONTROLLED. CONTROLLED COPY IS AVAILABLE ON COMPANY INTRANET.

3. Estimate and record the percentage of dry mass of gravel (less than 3 inches and greater than 1/4 inch).

4. Considering the rest of the sample, estimate, and record the percentage of dry mass of sand particles (about the smallest particle visible to the unaided eye).

5. Estimate and record the percentage of dry mass of fines in the sample (do not attempt to separate silts from clays).

6. Estimate percentages to the nearest 5 percent. If one of the components is present in a quantity considered less than 5 percent, indicate its presence by the term "trace".

7. The percentages of gravel, sand, and fines must add up to 100 percent. "Trace" is not included in the 100 percent total.

5.2 Soil Dilatancy, Toughness, and Plasticity

5.2.1 Dilatancy

To evaluate dilatancy, follow these procedures:

1. From the specimen, select enough material to mold into a ball about 1/2 inch (12 millimeters [mm]) in diameter. Mold the material, adding water if necessary, until it has a soft, but not sticky, consistency.

2. Smooth the soil ball in the palm of one hand with the blade of a knife or small spatula. Shake horizontally, striking the side of the hand vigorously against the other hand several times. Note the reaction of water appearing on the surface of the soil. Squeeze the sample by closing the hand or pinching the soil between the fingers, and note the reaction as none, slow, or rapid in accordance with the criteria in Table 1. The reaction is the speed with which water appears while shaking, and disappears while squeezing.

Table 1
Criteria for Describing Dilatancy

Description	Criteria
None	No visible change in specimen.
Slow	Water appears slowly on the surface of the specimen during shaking and does not disappear or disappears slowly upon squeezing.
Rapid	Water appears quickly on the surface of the specimen during shaking and disappears quickly upon squeezing.

PRINTED COPIES ARE UNCONTROLLED. CONTROLLED COPY IS AVAILABLE ON COMPANY INTRANET.

5.2.2 Toughness

Following the completion of the dilatancy test, shape the test specimen into an elongated pat and roll it by hand on a smooth surface or between the palms into a thread about 1/8 inch (3 mm) in diameter. (If the sample is too wet to roll easily, spread it into a thin layer and allow it to lose some water by evaporation.) Fold the sample threads and re-roll repeatedly until the thread crumbles at a diameter of about 1/8 inch. The thread will crumble at a diameter of 1/8 inch when the soil is near the plastic limit. Note the pressure required to roll the thread near the plastic limit. Also, note the strength of the thread. After the thread crumbles, lump the pieces together and knead it until the lump crumbles. Note the toughness of the material during kneading. Describe the toughness of the thread and lump as low, medium, or high in accordance with the criteria in Table 2.

Table 2
Criteria for Describing Toughness

Description	Criteria
Low	Only slight pressure is required to roll the thread near the plastic limit. The thread and the lump are weak and soft.
Medium	Medium pressure is required to roll the thread near the plastic limit. The thread and the lump have medium stiffness.
High	Considerable pressure is required to roll the thread near the plastic limit. The thread and the lump have very high stiffness.

5.2.3 Plasticity

The plasticity of a soil is defined by the ability of the soil to deform without cracking, the range of moisture content over which the soil remains in a plastic state, and the degree of cohesiveness at the plastic limit. The plasticity characteristic of clays and other cohesive materials is defined by the liquid limit and plastic limit. The liquid limit is defined as the soil moisture content at which soil passes from the liquid to the plastic state as moisture is removed. The test for the liquid limit is a laboratory, not a field, analysis.

The plastic limit is the soil moisture content at which a soil passes from the plastic to the semi-solid state as moisture is removed. The plastic limit test can be performed in the field and is indicated by the ability to roll a 1/8-inch (0.125-inch) diameter thread of fines, the time required to roll the thread, and the number of times the thread can be re-rolled when approaching the plastic limit.

The plasticity tests are not based on natural soil moisture content, but on soil that has been thoroughly mixed with water. If a soil sample is too dry in the field, add water prior to performing

PRINTED COPIES ARE UNCONTROLLED. CONTROLLED COPY IS AVAILABLE ON COMPANY INTRANET.

classification. If a soil sample is too sticky, spread the sample thin and allow it to lose some soil moisture.

Table 3 presents the criteria for describing plasticity in the field using the rolled thread method.

Table 3
Criteria for Describing Plasticity

Description	Criteria
Non-Plastic	A 1/8-inch thread cannot be rolled.
Low Plasticity	The thread can barely be rolled.
Medium Plasticity	The thread is easy to roll and not much time is required to reach the plastic limit.
High Plasticity	It takes considerable time rolling the thread to reach the plastic limit.

5.2.4 Angularity

The following criteria describe the angularity of the coarse sand and gravel particles:

- **Rounded** particles have smoothly-curved sides and no edges.
- **Subrounded** particles have nearly plane sides, but have well-rounded corners and edges.
- **Subangular** particles are similar to angular, but have somewhat rounded or smooth edgesand.
- **Angular** particles have sharp edges and relatively plane sides with unpolished surfaces. Freshly broken or crushed rock would be described as angular.

5.2.5 Color, Moisture, and Odor

The natural moisture content of soil is very important. Table 4 shows the terms for describing the moisture condition and the criteria for each.

Table 4
Soil Moisture Content Qualifiers

Qualifier	Criteria
Dry	Absence of moisture, dry to the touch
Moist	Damp but no visible water
Wet	Visible water, usually soil is below water table

PRINTED COPIES ARE UNCONTROLLED. CONTROLLED COPY IS AVAILABLE ON COMPANY INTRANET.

Color is described by hue and chroma using the Munsell Soil Color Chart (Munsell 2000). For uniformity, all site geologists shall utilize this chart for soil classification. Doing so will facilitate correlation of geologic units between boreholes logged by different geologists The Munsell Color Chart is a small booklet of numbered color chips with names like "5YR 5/6, yellowish-red." Note mottling or banding of colors. It is particularly important to note and describe staining because it may indicate contamination.

In general, wear a respirator if strong organic odors are present. If odors are noted, describe them if they are unusual or suspected to result from contamination. An organic odor may have the distinctive smell of decaying vegetation. Unusual odors may be related to hydrocarbons, solvents, or other chemicals in the subsurface. An organic vapor analyzer may be used to detect the presence of volatile organic contaminants.

5.2.6 In-Place Conditions

Describe the conditions of undisturbed soil samples in terms of their density/consistency (i.e., compactness), cementation, and structure utilizing the following guidelines:

5.2.6.1 Density/Consistency

Density and consistency describe a physical property that reflects the relative resistance of a soil to penetration. The term "density" is commonly applied to coarse to medium-grained sediments (i.e., gravels, sands), whereas the term "consistency" is normally applied to fine-grained sediments (i.e., silts, clays). There are separate standards of measure for both density and consistency that are used to describe the properties of a soil.

The density or consistency of a soil is determined by observing the number of blows required to drive a 1 3/8-inch (35 mm) diameter split barrel sampler 18 inches using a drive hammer weighing 140 lbs (63.5 kilograms [kg]) dropped over a distance of 30 inches (0.76 meters). Record the number of blows required to penetrate each 6 inches of soil in the field boring log during sampling. The first 6 inches of penetration is considered to be a seating drive; therefore, the blow count associated with this seating drive is recorded, but not used in determining the soil density/consistency. The sum of the number of blows required for the second and third 6 inches of penetration is termed the "standard penetration resistance," or the "N-value." The observed number of blow counts must be corrected by an appropriate factor if a different type of sampling device (e.g., Modified California Sampler with liners) is used. For a 2 3/8-inch inner diameter (I.D.) Modified California Sampler equipped with brass or stainless steel liners and penetrating a

cohesionless soil (sand/gravel), the N-value from the Modified California Sampler must be divided by 1.43 to provide data that can be compared to the 1 3/8-inch diameter sampler data.

For a cohesive soil (silt/clay), the N-value for the Modified California Sampler should be divided by a factor of 1.13 for comparison with 1 3/8-inch diameter sampler data.

Drive the sampler and record blow counts for each 6-inch increment of penetration until one of the following occurs:

- A total of 50 blows have been applied during any one of the three 6-inch increments; a 50-blow count occurrence shall be termed "refusal" and noted as such on the boring log.
- A total of 150 blows have been applied.
- The sampler is advanced the complete 18 inches without the limiting blow counts occurring, as described above.

If the sampler is driven less than 18 inches, record the number of blows per partial increment on the boring log. If refusal occurs during the first 6 inches of penetration, the number of blows will represent the N-value for this sampling interval. Table 5 and Table 6 present representative descriptions of soil density/consistency vs. N-values.

Table 5
Measuring Soil Density with a California Sample — Relative Density (Sands, Gravels)

	Field Criteria (N-Value)	
Description	**1 3/8 in. ID Sampler**	**2 in. ID Sampler using 1.43 factor**
Very Loose	0–4	0–6
Loose	4–10	6–14
Medium Dense	10–30	14–43
Dense	30–50	43–71
Very Dense	> 50	> 71

Table 6
Measuring Soil Density with a California Sampler — Fine Grained Cohesive Soil

Description	Field Criteria (N-Value)	
	1 3/8 in. ID Sampler	2 in. ID Sampler using 1.13 factor
Very Soft	0–2	0–2
Soft	2–4	2–4
Medium Stiff	4–8	4–9
Stiff	8–16	9–18
Very Stiff	16–32	18–36
Hard	> 32	> 36

For undisturbed fine-grained soil samples, it is also possible to measure consistency with a hand-held penetrometer. The measurement is made by placing the tip of the penetrometer against the surface of the soil contained within the sampling liner or shelby tube, pushing the penetrometer into the soil a distance specified by the penetrometer manufacturer, and recording the pressure resistance reading in pounds per square foot (psf). The values are as follows (Table 7):

Table 7
Measuring Soil Consistency with a Hand-Held Penetrometer

Description	Pocket Penetrometer Reading (psf)
Very Soft	0–250
Soft	250–500
Medium Stiff	500–1000
Stiff	1000–2000
Very Stiff	2000–4000
Hard	>4000

Consistency can also be estimated using thumb pressure using Table 8.

Table 8
Measuring Soil Consistency Using Thumb Pressure

Description	Criteria
Very Soft	Thumb will penetrate soil more than 1 inch (25 mm)
Soft	Thumb will penetrate soil about 1 inch (25 mm)
Firm	Thumb will penetrate soil about 1/4 inch (6 mm)
Hard	Thumb will not indent soil but readily indented with thumbnail
Very Hard	Thumbnail will not indent soil

PRINTED COPIES ARE UNCONTROLLED. CONTROLLED COPY IS AVAILABLE ON COMPANY INTRANET.

5.2.6.2 Cementation

Cementation is used to describe the friability of a soil. Cements are chemical precipitates that provide important information as to conditions that prevailed at the time of deposition, or conversely, diagenetic effects that occurred following deposition. Seven types of chemical cements are recognized by Folk (1980). They are as follows:

1. Quartz — siliceous

2. Chert — chert-cemented or chalcedonic

3. Opal — opaline

4. Carbonate — calcitic, dolomitic, sideritic (if in doubt, calcareous should be used)

5. Iron oxides — hematitic, limonitic (if in doubt, ferruginous should be used)

6. Clay minerals — if the clay minerals are detrital or have formed by recrystallization of a previous clay matrix, they are not considered to be a cement. Only if they are chemical precipitates, filling previous pore space (usually in the form of accordion-like stacks or fringing radial crusts) should they be included as "kaolin-cemented," "chlorite-cemented," etc.

7. Miscellaneous minerals — pyritic, collophane-cemented, glauconite-cemented, gypsiferous, anhydrite-cemented, baritic, feldspar-cemented, etc.

The degree of cementation of a soil is determined qualitatively by utilizing finger pressure on the soil in one of the sample liners to disrupt the gross soil fabric. The three cementation descriptors are as follows:

1. Weak — friable; crumbles or breaks with handling or slight finger pressure
2. Moderate — friable; crumbles or breaks with considerable finger pressure
3. Strong — not friable; will not crumble or break with finger pressure

PRINTED COPIES ARE UNCONTROLLED. CONTROLLED COPY IS AVAILABLE ON COMPANY INTRANET.

5.2.6.3 Structure

This variable is used to qualitatively describe physical characteristics of soil that are important to incorporate into hydrogeological and/or geotechnical descriptions of soil at a site. Appropriate soil structure descriptors are as follows:

- Granular — spherically shaped aggregates with faces that do not accommodate adjoining faces

- Stratified — alternating layers of varying material or color with layers at least 6 mm (1/4 inch) thick; note thickness

- Laminated — alternating layers of varying material or color with layers less than 6 mm (1/4 inch) thick; note thickness

- Blocky — cohesive soil that can be broken down into small angular or subangular lumps that resist further breakdown

- Lensed — inclusion of a small pocket of different soil, such as small lenses of sand, should be described as homogeneous if it is not stratified, laminated, fissured, or blocky. If lenses of different soil are present, the soil being described can be termed homogeneous if the description of the lenses is included

- Prismatic or Columnar — particles arranged about a vertical line, ped is bounded by planar, vertical faces that accommodate adjoining faces; prismatic has a flat top; columnar has a rounded top

- Platy — particles are arranged about a horizontal plane

5.2.6.4 Other Features

- Mottled — soil that appears to consist of material of two or more colors in blotchy distribution

- Fissured — breaks along definite planes of fracture with little resistance to fracturing (determined by applying moderate pressure to sample using thumb and index finger)

PRINTED COPIES ARE UNCONTROLLED. CONTROLLED COPY IS AVAILABLE ON COMPANY INTRANET.

- Slickensided — fracture planes appear polished or glossy, sometimes striated (parallel grooves or scratches)

5.2.7 Development of Soil Description

Develop standard soil descriptions according to the following examples. There are three principal categories under which all soil can be classified. They are described below.

5.2.7.1 Coarse-grained Soil

Coarse-grained soil is divided into sands and gravels. A soil is classified as a sand if over 50 percent of the coarse fraction is "sand-sized." It is classified as a gravel if over 50 percent of the coarse fraction is composed of "gravel-sized" particles.

The written description of a coarse-grained soil shall contain, in order of appearance: Typical name including the second highest percentage constituent as an adjective, if applicable (underlined); grain size of coarse fraction; Munsell color and color number; moisture content; relative density; sorting; angularity; other features, such as stratification (sedimentary structures) and cementation, possible formational name, primary USCS classification, secondary USCS classification (when necessary), and approximate percentages of minor constituents (i.e., sand, gravel, shell fragments, rip-up clasts) in parentheses.

Example: <u>POORLY-SORTED SAND WITH SILT</u>, medium- to coarse-grained, light olive gray, 5Y 6/2, saturated, loose, poorly sorted, subrounded clasts, SW/SM (minor silt with approximately 20 percent coarse-grained sand-sized shell fragments, and 80 percent medium-grained quartz sand, and 5 percent to 15 percent ML).

5.2.7.2 Fine-grained Soil

Fine-grained soil is further subdivided into clays and silts according to its plasticity. Clays are rather plastic, while silts have little or no plasticity.

The written description of a fine-grained soil should contain, in order of appearance: Typical name including the second highest percentage constituent as an adjective, if applicable (underlined); Munsell color; moisture content; consistency; plasticity; other features, such as stratification, possible formation name, primary USCS classification, secondary USCS classification (when necessary), and the percentage of minor constituents in parentheses.

Example: SANDY LEAN CLAY, dusky red, 2.5 YR 3/2, moist, firm, moderately plastic, thinly laminated, CL (70 percent fines, 30 percent sand, with minor amounts of disarticulated bivalves [about 5 percent]).

5.2.7.3 Organic Soil

For highly organic soil, describe the types of organic materials present as well as the type of soil constituents present using the methods described above. Identify the soil as an organic soil, OL/OH, if the soil contains enough organic particles to influence the soil properties. Organic soil usually has a dark brown to black color and may have an organic odor. Often, organic soils will change color, (e.g., from black to brown) when exposed to air. Some organic soils will lighten in color significantly when air-dried. Organic soils normally will not have a high toughness or plasticity. The thread for the toughness test will be spongy.

Example: ORGANIC CLAY, black, 2.5Y, 2.5/1, wet, soft, low plasticity, organic odor, OL (100 percent fines), weak reaction to HCl.

6.0 RECORDS

Document soil classification information collected during soil sampling onto the field boring logs, field trench logs, and into the field notebook. Copies of this information shall be placed in the project files.

7.0 HEALTH AND SAFETY

Observe standard health and safety practices according to the CTO-specific health and safety plan. Monitoring during excavation activities should determine contaminant concentrations and any required personal protective equipment (PPE) that may be necessary.

Suggested minimum protection during soil and rock classification activities in conjunction with field excavations shall include disposable nitrile gloves, steel-toed boots and overboots, safety glasses, hearing protection, and an American National Standards Institute-standard hard hat. Respirators and cartridges may be necessary depending on the contaminant concentrations and shall always be available on site. At no time during classification activities are personnel to reach for debris near machinery that is in operation, place any samples in their mouth, or come in contact with the soils/rocks without the use of gloves.

PRINTED COPIES ARE UNCONTROLLED. CONTROLLED COPY IS AVAILABLE ON COMPANY INTRANET.

In addition to the aforementioned precautions, employ the following safe work practices:

Physical Hazards Associated With Soil Classification:

- To avoid lifting injuries associated with large specimens, use the large muscles of the legs, not the back.
- Be wary of uneven terrain to avoid slip/trip/fall conditions.
- To avoid heat/cold stress as a result of exposure to extreme temperatures and PPE, drink electrolyte replacement fluids (1-2 cups/hour is recommended) and, in cases of extreme cold, wear fitted insulating clothing.
- Be aware of restricted mobility due to PPE.

8.0 REFERENCES

American Society for Testing and Materials (ASTM). 2000. *Standard Practice for Description and Identification of Soils (Visual, Manual Procedure)*. D 2488-00. West Conshohocken, PA.

Department of Defense, United States (DoD). 2005. *Uniform Federal Policy for Quality Assurance Project Plans, Part 1: UFP-QAPP Manual*. Final Version 1. DoD: DTIC ADA 427785, EPA-505-B-04-900A. In conjunction with the U. S. Environmental Protection Agency and the Department of Energy. Washington: Intergovernmental Data Quality Task Force. March. On-line updates available at: http://www.epa.gov/fedfac/pdf/ufp_qapp_v1_0305.pdf.

Folk, Robert L. 1980. *Petrology of Sedimentary Rocks*. Austin, TX: Hemphill Publishing Company.

Munsell Color Company (Munsell). 2000. *Munsell Soil Color Chart*, (Revised). Baltimore.

9.0 ATTACHMENTS

None.

Attachment 1
Well Completion Form

Well Construction Form

Facility/Project Name:

Well ID.:

Facility License Number:

Type of Well:
Ground Water Monitoring ☐
Piezometer ☐ Injection ☐
Other_____

Date Well Installed:

Location of well relative to waste source:
Upgradient ☐ Downgradient ☐ Side-gradient ☐ Unknown ☐

Well Installed By:

Well Driller License Number:

Geologist:

A. Protective pipe: ft. above grade
B. Well casing, top elevation: ft. MSL
C. Land Surface Elevation: ft. MSL
D. Surface seal, bottom: ft.below grade

12. USCS classification of soil near screen:
GP☐ GM ☐ GC ☐ GW ☐ SP ☐ SM ☐
SC☐ SW☐ ML ☐ MH ☐ CL ☐ CH ☐
Bedrock ☐
13. Sieve analysis attached? Yes ☐ No ☐
14. Drilling method used: Rotary ☐ HSA ☐
Other:
15. Drilling fluid used:
Water☐ Air ☐ Drilling Mud ☐ None ☐
16. Drilling additives used? Yes ☐ No ☐
Specify:
17: Source of water:

E. Bentonite seal: top ft. (depth)
F. Fine sand: top ft. (depth)
G. Filter pack: top ft. (depth)
H. Screen joint top: ft. (depth)
I. Well bottom: f t. (depth)
J. Filter pack: bottom ft. (depth)
K. Borehole: bottom . ft.(depth)
Borehole diameter: in.

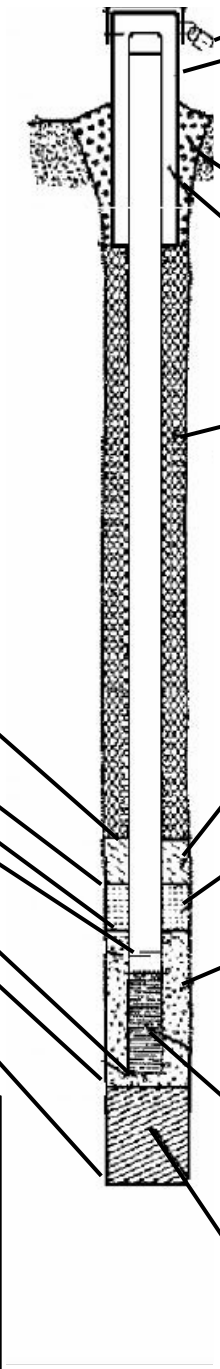

1. Cap and lock? ☐ Yes ☐ No
2. Protective cover pipe:
a. Inside diameter: in.
b. Length: ft.
c. Material: *Steel* ☐ *Other*
3. Surface seal: *Bentonite* ☐ *Concrete* ☐
Other:
4. Material blw. well casing and protective pipe:
Bentonite ☐ *Annular space seal* ☐
Other:
5. Annular space seal: *(Manufacturer name)*
a. Granular bentonite ☐
b. Bentonite/Cement slurry ☐
% bentonite ……. Bentonite/cement grout ☐
Lbs/gal mud weight … bentonite slurry ☐
c. How installed: *Tremie* ☐ *Tremie pumped* ☐
Gravity ☐
6. Bentonite seal: *(Manufacturer, product name)*
Bentonite granules ☐
☐ *¼ in.* ☐ *3/8 in.* ☐ *½ in.* *Bentonite pellets* ☐
Other:
7. Fine sand material: *(Manufacturer, product name, mesh size)*
Volume added: ft^3
8. Filter pack material: *(Manufacturer, product name, mesh size)*
Volume added: ft^3
9. Well casing: Flush-threaded Sch 40 PVC☐
Flush-threaded Sch 80 PVC☐
Other:
10. Screen material:
a. Screen type: factory cut ☐ continuous slot ☐
Other:
b. Manufacturer:
c. Slot size: 0. in.
d. Slotted length: ft.
11. Backfill material: *or* None ☐

CERTIFICATION:
I hereby certify that the information on this form is true and correct to the best of my knowledge:

_____
(Signature)

_____
(Company Name)

Attachment 2

Soil Boring Log

ENSAFE

LOCATION OF BORING	JOB NO.	CLIENT	LOCATION

DRILLING METHOD:	BORING NO.
	SHEET OF
SAMPLING METHOD:	DRILLING
	START TIME / FINISH TIME
	DATE / DATE

WATER LEVEL				
TIME				
DATE				
CASING DEPTH				

DATUM ELEVATION

SAMPLER TYPE	INCHES DRIVEN / INCHES RECOVERED	DEPTH OF CASING	SAMPLE NO. / SAMPLE DEPTH	BLOWS/FT SAMPLER	VAPOR CONCENTRATIONS (PPM)	DEPTH IN FEET	SOIL GRAPH
						0	
						1	
						2	
						3	
						4	
						5	
						6	
						7	
						8	
						9	
						0	
						1	
						2	
						3	
						4	
						5	
						6	
						7	
						8	
						9	
						0	

SURFACE CONDITIONS

DRILLING CONTR. _____

BY _____ DATE _____ CHK'D BY _____

Attachment 3
Well Development Record

WELL DEVELOPMENT LOG

PROJECT	WELL NO.	SITE	PREPARED BY

METHOD
- OVERPUMPAGE ☐
- BAILER ☐
- SURGE BLOCK ☐
- AIR LIFT ☐
- OTHER _____

INITIAL WATER LEVEL

FINAL WATER LEVEL

REMARKS:

CAPACITY OF CASING (GALLONS/LINEAR FOOT)

1" - 0.012

2" - 0.16
4" - 0.65
6" - 0.1.47

VOLUME BETWEEN CASING AND HOLE (GALLONS/LINEAR FOOT) (ASSUMING 40% POROSITY)

1" CASING AND 2" HOLE - 0.013

2" CASING AND 6" HOLE - 0.52
2" CASING AND 8" HOLE - 0.98
4" CASING AND 10" HOLE - 1.37
4" CASING AND 12" HOLE - 2.09

HOLE DIAMETER d_h =

WELL CASING INSIDE DIAMETER $d_w ID$ =

OUTSIDE DIAMETER $d_w OD$ = _____

DEPTH TO: WATER LEVEL H =

BASE OF SEAL S = _____

BASE OF WELL TD =

EST. FILTER PACK POROSITY P = _____

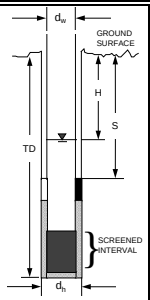

WELL VOLUME CALCULATION :

$$\text{CASING VOLUME} = V_c = \Pi\left(\frac{d_w ID}{2}\right)^2 (TD - H) = 3.14\left(\frac{___}{2}\right)^2 (___ - ___) = ____$$

$$\text{FILTER PACK PORE VOLUME} = V_f = \Pi\left[\left(\frac{d_h}{2}\right)^2 - \left(\frac{d_w OD}{2}\right)^2\right](TD - (S \text{ or } H^*))(P) = ____$$

(* if S > H, use S; if S < H, use H)

$$= 3.14\left[\left(\frac{___}{2}\right)^2 - \left(\frac{___}{2}\right)^2\right](___ - ___)(___) = ___$$

TOTAL WELL VOLUME = VT = Vc + Vf = ____ + ____ = _____ $ft.^3$ x 7.48 = _____ gal.

DEVELOPMENT LOG:

DATE	TIME BEGIN/END	METHOD	ELAPSED TIME	FLOW RATE (gpm)	CUMULATIVE WATER REMOVED GALLONS	WATER QUALITY pH	TEMP	CONDUC-TIVITY	D.O. *	REDOX	TURBID-ITY	COMMENTS

* = Dissolved Oxygen

Standard Operating Procedure SOP-3-14
Monitoring Well Sampling

1.0 PURPOSE

This standard operating procedure (SOP) describes the monitoring well sampling procedures. If there are procedures from Resolution Consultants, state and/or federal that are not addressed in this SOP and are applicable to monitoring well sampling, then those procedures may be added as an appendix to the project-specific sampling and analysis plan (SAP).

2.0 SCOPE

This procedure shall serve as management-approved professional guidance consistent with protocol in the Uniform Federal Policy-Quality Assurance Project Plan (DoD 2005). As professional guidance for specific activities, this procedure is not intended to obviate the need for professional judgment during unforeseen circumstances. Deviations from this procedure while planning or executing planned activities must be approved by either the Contract Task Order (CTO) Manager or the Quality Assurance (QA) Manager, and documented.

3.0 DEFINITIONS

None.

4.0 RESPONSIBILITIES

The CTO Manager is responsible for ensuring that these standard groundwater sampling activities are followed during projects. The CTO Manager or designee shall review all groundwater sampling forms for completeness. The CTO Manager is responsible for ensuring that all personnel involved in monitoring well sampling shall have the appropriate education, experience, and training to perform their assigned tasks as specified in Chief of Naval Operations Instruction 5090.1c (DON 2007). The QA Manager or Technical Director is responsible for ensuring overall compliance with this procedure. The Field Manager is responsible for ensuring that all project field staff follow these procedures.

5.0 PROCEDURES

5.1 Site Background Information

Establish a thorough understanding of the purposes of the sampling event prior to field activities. Conduct a review of all available data obtained from the site and pertinent to the water sampling. Review well historical data including, but not limited to, well locations, sampling history, purging rates, turbidity problems, previously used purging methods, well installation methods, well completion records, well development methods, previous analytical results, presence of immiscible phases, historical water levels, and general hydrogeologic conditions.

To help minimize the potential for cross-contamination, well purging, sampling, and water level measurement collection shall proceed from the least contaminated to the most contaminated as indicated in previous analytical results or expected contaminant transport. This order may be changed in the field if conditions warrant it, particularly if dedicated sampling equipment is used. A review of prior sampling procedures and results may also identify which purging and sampling techniques are appropriate for the parameters to be tested under a given set of field conditions.

5.2 Groundwater Analysis Selection

Establish the requisite field and laboratory analyses prior to water sampling. Determine the appropriate and required types and numbers of QA/quality control (QC) samples to be collected (if not specified in the SAP), as well as the type and volume of sample preservatives, the number of sample shipping containers (e.g., coolers), and the quantity of ice or other chilling materials. The sampling personnel shall ensure that the appropriate number and size sample containers are brought to the site, including extras in case of breakage or unexpected field conditions. The analytical requirements for groundwater analyses should be specified in the project-specific work plan or SAP.

5.3 Sampling Methods

The utilized sampling methodology shall allow for the collection of a groundwater sample in as undisturbed a condition as possible, minimizing the potential for volatilization or aeration during collection and transfer to sample containers. A variety of methods exist including submersible pumps, bladder pumps, peristaltic pumps, and bailers. Dedicated tubing should be used if at all possible and sampling equipment should be constructed of inert material consisting of either stainless steel, polyethylene, Teflon, or polyvinyl chloride. The selected pump type must take into account water depth, total depth of well, and the lift capacity of pump — typically available from the pump manufacturer. If depth to water is greater than 50 feet, then the pumps performance curves should be evaluated to ensure a sustained pumping rate can be maintained for continual flow. Sampling materials must be compatible with site contaminants and dedicated tubing should always be used, if possible. The various types of sampling devices, their advantages and disadvantages are described in the following paragraphs.

Bailers

A single- or double-check valve Teflon or stainless steel bailer equipped with a bottom discharging device can be utilized to collect groundwater samples. Bailers have a number of disadvantages,

including a tendency to alter the chemistry of groundwater samples due to degassing, volatilization, mixing, and aeration; the possibility of creating high groundwater entrance velocities; differences in operator techniques resulting in variable samples; and difficulty in determining where in the water column the sample was collected. Therefore, bailers should be used for groundwater sampling only when other types of sampling devices cannot be utilized for technical or logistical reasons. The QA Manager or Technical Director must approve the use of bailers for groundwater sampling in advance, or as approved in a SAP.

Bailers must be constructed of materials compatible with the analytes of interest. Use disposable bailers when sampling grossly contaminated sample sources. Lanyards must be made of non-reactive, non-leachable material. They may be cotton twine, nylon, stainless steel, or may be coated with Teflon, Polyethylene or Polypropylene.

Plastic sheeting must be placed around the well so that the bailer lanyard or rope is not in contact with ground. Bailers are lowered into the top of the water column, allowed to fill, and removed. Bailer samples are collected by slowly and gently lowering the bailer down the well until the top of the bailer is below the groundwater surface. Care should be taken to avoid sample disturbance and to minimize aeration of samples or groundwater in the well. It is critical that bailers be slowly and gently immersed into the top of the water column, particularly during final stages of purging, to minimize turbidity and disturbance of volatile organic constituents. Do not allow any bailer to fall freely into the well; minimize contact with the well sides and avoid contact with the bottom since this may allow any attached or settled out sediments to be incorporated into the samples. Retrieve the bailer slowly. Carefully empty groundwater samples directly into the appropriate containers.

New bailer rope should be attached to the bailer between samples and after decontamination, if non-disposable bailers are used. If a bailer was used to purge the well, it may also be used to sample the well and new bailer rope is not required between purging and sampling.

Bladder Pumps

A gas-operated Teflon or stainless steel bladder pump with adjustable flow control and equipped with Teflon-lined tubing can be effectively utilized to collect a groundwater sample and is considered to be the best overall device for sampling inorganic and organic constituents. Operate positive gas displacement bladder pumps in a continuous manner so that they minimize discharge pulsation that can aerate samples in the return tube or upon discharge. If a

PRINTED COPIES ARE UNCONTROLLED. CONTROLLED COPY IS AVAILABLE ON COMPANY INTRANET

bladder pump is utilized for the well purging process, the same bladder pump can also be utilized for sample collection after purging is complete.

When using a compressor, take several precautions. First, position any fuel-operated compressor downwind of the well and point of sample collection. Second, ensure the purge water exiting the well is collected into a drum or bucket. Finally, connect the compression hose from the well pump to the control box. Do not connect the compression hose from the compressor to the control box until after the engine has been started.

When all precautions are completed and the engine has been started, connect the compression hose to the control box. Slowly adjust the control knobs so as to discharge water in the shortest amount of time but maintaining a near constant flow. This does not mean that the compressor must be set so as to discharge the water as hard as possible. The optimal setting is one that produces the largest volume of purge water per minute (not per purge cycle) while maintaining a near constant flow rate.

Prior to sampling, adjust the flow or purge rate to yield 100 to 300 milliliters/minute (mL/min). Avoid settings that produce pulsating streams of water instead of a steady stream. Operate the pump at this low flow rate for several minutes to ensure that the groundwater being sampled is being withdrawn at a low extraction rate. The flow rate of 100 mL/min must be obtained so as not to cause fluctuation in pH, pH-sensitive analytes, and the loss of volatile constituents. Higher flow rates can be used once the samples for the analysis of volatile components have been collected. At no time shall the sample flow rate exceed the flow rate used while purging. Preserve the natural conditions of the groundwater, as defined by pH, dissolved oxygen (DO), specific conductance, temperature, turbidity, and oxidation/reduction potential (ORP).

For those samples requiring filtration, it is recommended to use in-line high capacity filter after all nonfiltered samples have been collected.

Passive Diffusion Bags

Passive diffusion bag samplers are bags comprised of low-density polyethylene plastic and containing analyte-free water, preferably with no headspace. The bags are deployed, with stainless steel weights, to the desired sample interval and are allowed to equilibrate with the water at the point of deployment in the well. A deployment period of a minimum of 14 days is recommended to ensure equilibration prior to removal.

After 14 days, the bags are removed and opened with a puncture device or other cutting implement and the contents transferred to containers for sampling or field measurement.

Peristaltic Pumps

A peristaltic pump is a type of positive displacement pump that lifts the water in a well by vacuum. The sample tubing is connected to flexible silicon hose fitted between rotating cams inside the pump casing that compresses the flexible tube as the rotor turns, creating a vacuum within the tube which lifts the water. In peristaltic pumps, no moving part of the pump is in contact with the water, thus forgoing the need for pump decontamination. The pumps are simple to operate, generally trouble free and quite inexpensive requiring only a 12-volt battery to power.

Peristaltic pumps may use a vacuum-trap method to collect non-volatile organic compound (VOC) samples. In this method, a pre-cleaned "transfer bottle" is connected between the peristaltic pump and the Teflon intake tubing installed in the well. As the pump evacuates air from the transfer bottle, the vacuum created causes the transfer bottle to fill with groundwater avoiding water contact with the flexible silicon tubing. The water aliquot in the transfer bottle is used to fill the appropriate sample containers.

Using a peristaltic pump to collect samples for VOCs requires special technique. The intake tube in the well is allowed to fill, the pump is shutoff and the tubing is retrieved from the well. In some cases, an inline valve is placed before the pump and is closed to ensure the sample does not drain from the intake tubing while it is being withdrawn from the well. Alternatively, the intake tubing may be crimped to retain the water. Sample containers should be filled by draining the water from the bottom of the intake tube by either breaking the vacuum or reversing the pump flow direction. Special care should be taken if the pump is reversed so that water that contacted the silicon tubing is not collected as part of the sample or that water from the purge collection container is not siphoned into sample container. Groundwater contact with the pump's silicon tubing should be avoided as the tubing may strip low level VOCs from the sample or components of the silicon tubing may interfere with the sampling results.

If depth to water in the well is greater than 28 to 30 feet, the peristaltic pump will not lift the water and an alternate sampling device will be necessary.

PRINTED COPIES ARE UNCONTROLLED. CONTROLLED COPY IS AVAILABLE ON COMPANY INTRANET

Submersible Pumps

When operated under low-flow rate conditions (mL/min or less), submersible pumps are as effective as bladder pumps in acquiring samples for volatile organic analysis as well as other analytes. The submersible pump must be specifically designed for groundwater sampling (i.e., pump composed of stainless steel and Teflon, sample discharge lines composed of Teflon) and must have a controller mechanism allowing the required low flow rate. Ensure the purge water exiting the well is collected into a drum or bucket. Adjust the pump rate so that flow is continuous and does not pulsate to avoid aeration and agitation within the sample discharge lines. Run the pump for several minutes at the low flow rate used for sampling to ensure that the groundwater in the lines was obtained at the low flow rate. Higher pumping rates than 100 to 300 mL/min may be used when collecting samples to be analyzed for non-volatile constituents, if significant drawdown does not occur.

5.4 Groundwater Sampling Procedures

5.4.1 Measurement of Static Water Level and Purge Volume Calculations

Verify the identification of the monitoring well by examining markings, sign plates, placards or other designations. Remove the well cover and remove all standing water around the top of the well casing (manhole) before opening the well cap. Inspect the exterior protective casing of the monitoring well for damage and document the results of the inspection if there is a problem. It is recommended that you place a protective ground covering (like plastic sheeting) around the well head. Replace the covering if it becomes soiled or ripped. Inspect the well lock and determine whether the cap fits tightly. Replace the cap if necessary. Document all observations in the logbook.

Use an electronic probe to determine the water level. Decontaminate all equipment before use per SOP 3-06, Equipment Decontamination. Measure the depth to groundwater from the top of well casing to the nearest 0.01 foot and always measure from the same reference point or survey datum mark on the well casing. If there is no reference mark, measure from the north side of the casing. Record the measurement and the reference point in the logbook.

The device used to measure the water level surface and depth of the well shall be sufficiently sensitive and accurate in order to obtain a measurement to the nearest 0.01 foot reliably. An electronic water level meter will usually be appropriate for this measurement; however, when the groundwater within a particular well is highly contaminated, an electronic interface probe should be used to determine the presence of light, non-aqueous phase liquids (LNAPLs) and/or

dense, non-aqueous phase liquids (DNAPLs). Measurements should be from the top and the bottom of the product. Water levels containing LNAPL must be corrected for density effects to accurately determine the elevation of the water table.

If well development or drilling data indicates a potential for immiscible phase layers in groundwater, complete the following steps for detecting the presence of LNAPL and DNAPL before the well is evacuated for conventional sampling:

1. Carefully remove the well cap and release any pressure that may have accumulated from possible gasses or pressure changes between the inside and outside of well.

2. Sample the headspace in the wellhead immediately after the well is opened for organic vapors using an organic vapor analyzer such as a photoionization detector or flame-ionization detector, and record the measurements in the logbook.

3. Lower an interface probe into the well to determine the existence of any immiscible layer(s), LNAPL and/or DNAPL, and record the measurements in the logbook.

4. Confirm the presence or absence of an immiscible phase by slowly lowering a clear bailer to the appropriate depth, then visually observing the results after sample recovery.

If the well contains an immiscible phase, it may be desirable to sample this phase separately. It may not be meaningful to conduct water sample analysis of water obtained from a well containing LNAPLs or DNAPLs. Consult the CTO Manager and QA Manager or Technical Director if this situation is encountered.

5.4.2 Water Column Determination

If the total well depth is not available, the well should be sounded using a decontaminated weighted tape. A water level probe should not be used for sounding a well as the meter will be short circuited due to excessive head pressures overcoming the probe's seals. Note that wells which have not been sampled for a long period could be sufficiently silted-in to require re-development prior to sampling. It is therefore recommended that sufficient planning be included in a work activity to allow at least 24 hours to sound any wells to be sampled and redevelop for which a layer of silt at the bottom of the well screen may be present.

Subtract the depth to the top of the water column from the total well depth to determine the length of the water column. Calculate the total volume of water in gallons in the well using the following equation:

$$v = (0.041)d^2h$$

Where:
v = volume in gallons
d = well diameter in inches
h = height of the water column in feet

The total volume of water in the well may also be determined with the following equation by using a casing volume per foot factor (gallons per foot of water) for the appropriate diameter well:

$$v = (\text{gallons per foot of water})h$$

Where:
v = volume in gallons
h = height of the water column in feet

Table 1
Well Purging Volumes for Variable Well Casing Diameters

Casing Internal Diameter (inches)	Approximate Gallons per Foot of Water
0.75	0.02
1	0.04
1.25	0.06
2	0.16
3	0.37
4	0.65
5	1.02
6	1.47
12	5.88

5.5 Low Flow Purging and Water Quality Parameter Monitoring

The low-flow purging is the method of choice for collecting representative groundwater and offers the advantage over traditional three-well volume purges in that it generates minimal

investigation-derived waste and commonly generates a higher quality groundwater sample. This method is based on the procedure described in *Low-Flow (Minimal Drawdown), Ground-Water Sampling Procedures*, (Puls and Barcelona, USEPA, April 1996).

This procedure is typically accomplished by measuring field parameters at periodic intervals during purging with a flow-through cell container that allows field personnel to constantly monitor field water quality parameters such as temperature, pH, dissolved oxygen, and specific conductance. Other techniques or containers can be used to collect samples for periodic measurements, provided that periodic and representative samples can be collected.

Low-flow purging does not require the calculation of the water volume in the well, since purging is based solely on indicator parameter stabilization. Instead, the volume of the pump and discharge tubing are used to determine field measurement frequency and/or the minimum purge volume. Pump chamber or bladder volumes can be obtained from the manufacturer. Volumes of the sample tubing can be calculated or taken from Table 2.

Table 2
Equipment Volumes for Variable Tube Diameters

Discharge Tubing Volumes

Tubing Diameter (inches)	Volume per foot
1/2 OD and 3/8 ID	20 mL
3/8 OD and 1/4 ID	10 mL
1/4 OD and 1/8 ID	5 mL

Notes:
OD = outer diameter
ID = inner diameter
mL = milliliter

Well casing volumes should still be calculated and recorded on field information forms in the event parameter stabilization is not achieved after a three-casing-volume purge (see following subsection).

Sampling equipment volumes are calculated and recorded for use in determining the frequency of field measurements. Depending on the equipment configuration, calculate and record the volume of the pump and sample tubing using the methodology previously described (the volumes are typically converted to liters). The frequency of field readings is based on the time required to

PRINTED COPIES ARE UNCONTROLLED. CONTROLLED COPY IS AVAILABLE ON COMPANY INTRANET

purge at least one volume of the pump and tubing system. For example, a pump and tubing volume of 500 mL purged at a rate of 250 mL/min will be purged in 2 minutes; readings should be at least 2 minutes apart.

The purging process removes sufficient water from within the well screen zone to obtain a sample that is representative of actual aquifer conditions adjacent to the well. The pump intake location is established for dedicated pumps. For non-dedicated pumps, the intake is placed within the screened interval, typically in the center of the screen. If the water column in the screen is shorter than the overall screen length, the pump should be placed lower in the screen but no lower than about 6 to 12 inches from the bottom of the screen to avoid picking up any settled solids in the well.

Typically, a pumping rate less than 1,000 mL/min is used and it is dependent on site-specific conditions. The pumping rate should be established based on where drawdown achieves stabilization and not an arbitrary drawdown limit. Excessive pumping rates (more than 1,000 mL/min) should be avoided so as to avoid turbidity as a result of aquifer shearing and water cascading through the well screen and potentially stripping VOCs. Flow rate is determined by measuring the time it takes to fill a calibrated container. Drawdown is monitored by measuring the water level below the top of the well casing with a water level indicator or similar device (e.g., transducer) while pumping. Flow rates and drawdown are recorded on a field logbook, field data form or with a data logger.

- Measure water level prior to initiating purging;
- Calculate well volumes, if required by permit;
- Calculate sampling system volume and determine indicator parameter measurement frequency;
- Connect the flow-through cell to the discharge tube from the pump;
- Begin purge at a rate of 100 to 200 mL/min (or at a rate determined from prior events);
- Check drawdown with a water level monitor while pumping;

- If drawdown stabilizes quickly, increase the pumping rate in increments of 100 mL/min until drawdown increases, then reduce the rate slightly after a few minutes to achieve a stable pumping water level;

- If the water level continues to drop, reduce purge rate by 100 mL/min increments until the water level stabilizes;

- Once water level stabilization is achieved, proceed to indicator parameter stabilization. Attempts should be made to avoid purging well to dryness, which can usually be accomplished by slowing the purge rate. If after continued reductions in the flow rate the well goes dry, the well should be sampled immediately after a sufficient volume of water has recovered in the well.

- If, after three well volumes have been removed, the chemical parameters have not stabilized according to the above criteria, the sampling team may elect to collect a sample.

Parameter Stabilization

Parameter stabilization ensures that the well is adequately purged and sampled groundwater is representative of formation water. In order to determine when a well has been adequately purged, samplers should:

- Monitor pH, specific conductance, DO, ORP, temperature, and turbidity of the groundwater removed during purging.

- Ensure stabilization is achieved by measuring three consecutive measurements, no sooner than 3 to 5 minutes apart, for the six parameters and criteria listed in Table 3 are achieved.

- Observe and record the water level drawdown.

- Record the purge rate and note the volume of water removed if required by guidance or permit.

Make every attempt to satisfy the parameter criteria in Table 3. Match the pumping rate with the recharge rate of the well by ensuring water level in well is stable before evaluating the purging criteria and document on the groundwater sampling form.

PRINTED COPIES ARE UNCONTROLLED. CONTROLLED COPY IS AVAILABLE ON COMPANY INTRANET

Table 3
Water Quality Parameters and Stability Criteria

Parameter	Stability Limit
Temperature	± 0.2 °C
pH	± 0.2 Standard Units
Specific Conductance	± 5.0% of reading
Oxygen Reduction Potential	± 10.0% of reading
Dissolved Oxygen	≤20% Saturation
Turbidity	≤10 NTU

Notes:
°C = degrees Celsius
NTU = nephelometric turbidity units

If the criteria for dissolved oxygen and/or turbidity cannot be met, the range between the highest and the lowest values for the last three measurements cannot exceed the stated limits in Table 4.

Table 4
Default Criteria for Dissolved Oxygen and Turbidity
if Stabilization Criteria is Not Achieved

Parameter	Stability Limit
Temperature	± 0.2 °C
pH	± 0.2 Standard Units
Specific Conductance	± 5.0% of reading
Oxygen Reduction Potential	± 10.0% of reading
Dissolved Oxygen	± 0.2 mg/L or 10%, whichever is greater
Turbidity	± 5 NTUs or 10%, whichever is greater

Notes:
°C = degrees Celsius
mg/L = milligrams per liter
NTU = nephelometric turbidity units

If the stabilization parameters described cannot be met, and all attempts have been made to minimize the drawdown, check the instrument condition and calibration, purging flow rate and all tubing connections to determine if they might be affecting the ability to achieve stable measurements. All measurements that were made during the attempt must be documented, as well as a description pertaining to why the dissolved oxygen and/or turbidity were requirements were not achieved, and associated pertinent information. The sampling team leader may decide

PRINTED COPIES ARE UNCONTROLLED. CONTROLLED COPY IS AVAILABLE ON COMPANY INTRANET

whether or not to collect a sample or to continue purging after three well volumes have been removed from the well.

5.6 Groundwater Sampling

Wells should be sampled immediately upon completion of purging operations. Once the water level stabilizes, the pumping rate should remain constant during low-flow sampling (generally less than 500 mL/min). For VOCs, lower sampling rates (100 to 200 mL/min) may be required.

- Record field parameters prior to sampling.
- Record depth to water levels prior to sampling (note if the well has not stabilized).
- Record the flow rate determined using a calibrated measuring device.
- Disconnect the flow-through cell and other equipment from the pump discharge tube.
- Collect samples from the pump discharge tube (or if using a peristaltic pump, by the method described in Section 5.3).
- Collect sample in the order cited in Section 5.8.

If, after three well volumes have been removed, the chemical parameters have not stabilized according to the criteria, the sampling team may elect to collect a sample. In most cases, after removing three well volumes of water, it may be assumed that fresh formation water is being collected by the pump intake. However, all site-specific data should be considered in determining whether sample collection is appropriate in a given situation. The conditions of sampling should be noted in the field log or field information form.

Low Yield Formations

In some situations, even with very slow purge rates, the well drawdown may not stabilize. In this case, sampling the water within the well screen zone provides the best opportunity to determine the formation water chemistry, as well purging can greatly affect sample chemistry through changes in dissolved gas levels, dissolved metals and VOCs.

PRINTED COPIES ARE UNCONTROLLED. CONTROLLED COPY IS AVAILABLE ON COMPANY INTRANET

Attempts should be made to avoid purging wells to dryness. This can usually be accomplished by slowing the purge rate. If the well is evacuated during the purging procedures listed, the sample may be collected as soon as a sufficient volume of water has recovered in the well. If the well goes dry repeatedly (i.e., over multiple monitoring events) prior to sampling, then a minimum purge or "passive" sampling approach should be used in lieu of well evacuation.

In the case of a fully dry purge (not recommended): This criterion applies only if purging was attempted as described, and if it is impossible to balance the pumping rate with the rate of recharge at very low pumping rates (less than 100 mL/min). If wells have previously and consistently purged dry and the current depth to groundwater indicates that the well will purge dry during the sampling, minimize the amount of water removed from the well before collecting the sample:

- Place the pump or tubing intake within the well screened interval.
- Use 1/4-inch OD diameter Teflon, polyethylene, or polypropylene tubing and the smallest possible pump chamber volume to minimize the total volume of water pumped from the well and to reduce drawdown.
- Select tubing that is thick enough to minimize oxygen transfer through the tubing walls while pumping.
- Pump at the lowest possible rate (100 mL/min or less) to reduce drawdown to a minimum.
- Purge at least two volumes of the pumping system (pump, tubing and flow-through cell, if used).
- Measure pH, specific conductance, temperature, ORP, DO and turbidity and begin to collect the samples.

<u>Collect samples immediately after purging is complete</u>. If adequate volume is available upon completion of purging, the well must be sampled immediately. If sample collection does not occur within one hour of purging completion, re-measure the field parameters just prior to collecting the sample. If the measured values are not within the stability criteria re-purge the well (the exception is for "dry" wells). If well must recover prior to sampling, sample the well as soon

as adequate volume has recovered. Sampling of wells which have a slow recovery should be scheduled so that they can be purged and sampled in the same day, after adequate volume has recovered. Wells of this type should not be purged at the end of one day and sampled the following day.

5.7 Groundwater Sampling Using Peristaltic Pump/Vacuum Jug Assembly

Some states and/or regions discourage organic sample collection through peristaltic pump flexible tubing used in the pump head. In these instances, when collecting samples for organic compound analyses it may be necessary to use a vacuum container, placed between the pump and the well for sample collection. Figure 1 shows the vacuum/jug assembly apparatus.

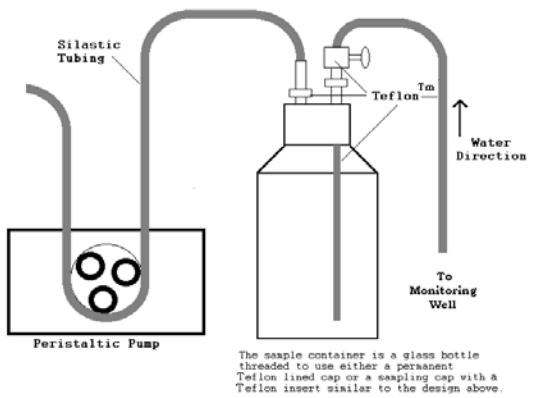

Figure 5-1
Vacuum Jug/Assembly Apparatus

The following step-by-step procedures, obtained from the U.S. Environmental Protection Agency (USEPA) Region 4 SOP, *Groundwater Sampling*, describe the process of sampling with a peristaltic pump and vacuum jug (see note following these procedures for collection of VOC samples):

1. Disconnect the purge tubing from the pump after low flow is established. Make sure the tubing is securely attached to the protective casing or other secure object.

2. Insert the tubing into one of the ferrule nut fittings of a Teflon vacuum container transfer cap assembly.

3. Place a suitable length of Teflon tubing between the remaining transfer cap assembly ferrule nut fitting and the vacuum side of the flexible tubing in the peristaltic pump head. Securely hand-tighten both fittings.

4. Turn the pump on. Water should begin to collect in the transfer container (typically a 1-liter sample container) within a few minutes. If water does not begin to flow into the container within several minutes, check the transfer cap fittings and make sure the assembly is tightly attached to the container. It may be necessary to tighten the ferrule nuts with a wrench or pliers to achieve a vacuum in the system, particularly when approaching the maximum head difference between the pump and water table (limit of suction).

5. When the transfer container is nearly full, turn off the pump, remove the transfer cap assembly, and pour the sample into the appropriate containers.

6. If additional sample volume is needed, replace the transfer cap assembly, turn the pump on, and collect additional volume. The use of Teflon valves or ball check devices to retain the water column in the sample delivery tubing during the transfer phase, when large volumes of sample are required, is acceptable. These devices, however, must be constructed so that they may be completely disassembled and cleaned.

NOTE: Samples for volatile organic compound analyses cannot be collected using this method. If samples for VOC analyses are required, they must be collected with a Teflon or stainless steel bailer or by other approved methods, such as the "soda straw" method. The "soda straw" method involves allowing the tubing to fill, by either (A) lowering it into the water column or (B) by filling it via suction applied by the pump head. If method (A) is used, the tubing is removed from the well after filling and the captured sample is allowed to drain into the sample vial. If method (B) is used, after running the pump and filling the tubing with sample, the pump speed is reduced and the direction reversed to push the sample out of the tubing into the vials. Avoid completely emptying the tubing when filling the sample vials when using method (B) to prevent introducing water that was in contact with the flexible pump head tubing. Either method is repeated, as necessary, until all vials are filled.

5.8 Sample Handling and Preservation

The laboratory will supply the necessary sample bottles and required preservatives. In some cases, the field team may add preservatives in the field. Improper sample handling may alter the

analytical results of the sample. Therefore, transfer samples in the field from the sampling equipment directly into the laboratory provided containers as described above and in the project-specific planning documents.

It is not an acceptable practice for samples to be composited in a common container in the field and then split in the laboratory, or poured first into a wide mouth container and then transferred into smaller containers.

Collect groundwater samples and place them in their proper containers in the order of decreasing volatility and increasing stability. A preferred collection order for some common groundwater parameters is:

1. VOCs and total organic halogens
2. Dissolved gases, total organic carbon, total fuel hydrocarbons
3. Semi-volatile organics, pesticides
4. Total metals, general minerals (unfiltered)
5. Dissolved metals, general minerals (filtered)
6. Phenols
7. Cyanide
8. Sulfate and chloride
9. Turbidity
10. Nitrate and ammonia
11. Radionuclides

When sampling for VOCs, collect water samples in the laboratory pre-preserved vials by allowing the groundwater to slowly flow along the sides of the vial. Sampling equipment shall not touch the interior of the vial. Fill the vial above the top of the vial to form a positive meniscus with no overflow. No headspace shall be present in the sample container once the container has been capped. This can be checked by inverting the bottle once the sample is collected and tapping the side of the vial to dislodge air bubbles that may adhere to the sample cap or wall of sample vial. Sometimes it is not possible to collect a sample without air bubbles, particularly water that is aerated. In these cases, the investigator shall note the problem to account for possible error. Cooling samples may also produce headspace, but this will typically disappear once the sample is warmed prior to analysis. In addition, if the samples are shipped by air, air bubbles

may form. Field logs should note any headspace in the sample container(s) at the time of collection.

Preserve samples immediately upon collection. Ideally, sampling containers will be pre-preserved with a known concentration and volume of preservative. For example, metals require storage in aqueous media at pH of 2 or less. Typically, 0.5 mL of 1:1 nitric acid added to 500 mL of groundwater will produce a pH less than 2. Certain matrices that have alkaline pH (greater than 7) may require more preservative. An early assessment of preservation techniques, such as the use of pH strips after initial preservation, may therefore be appropriate. The introduction of preservatives will dilute samples, and may require normalization of results. Calcium rich groundwater will react with the hydrochloric acid preservative and effervesce in VOC vials. In such instances, the laboratory should be contacted for possible removal of the preservative and reduction in the sample holding time. Guidance for the preservation of environmental samples can be found in the USEPA *Handbook for Sampling and Sample Preservation of Water and Wastewater* (USEPA 1982). Additional guidance can be found in other USEPA documents (USEPA 1992, 1996).

5.9 Quality Assurance / Quality Control Samples

The accuracy and precision of the field methods and laboratory analytical procedures are assessed through QA/QC samples collected during the sampling program. QA/QC samples may be labeled with QA/QC identification numbers or fictitious identification numbers if blind submittal is desired, and are sent to the laboratory with the other samples for analyses. The frequency, types, and locations of QA/QC samples should be specified in the SAP. Examples of QA samples include, but are not limited to, equipment rinsate blanks, field blanks, trip blanks, filter blanks, duplicate samples, and matrix spike (MS)/matrix spike duplicate (MSD) samples.

5.9.1 Equipment Rinsate Blanks

Equipment rinsate blanks are intended to check if decontamination procedures have been effective and to assess potential contamination resulting from containers, preservatives, sample handling and laboratory analysis. Procedures for collection are as follows:

1. Select a piece of sampling equipment that has been decontaminated onsite per the site-specific requirements.

PRINTED COPIES ARE UNCONTROLLED. CONTROLLED COPY IS AVAILABLE ON COMPANY INTRANET

2. Rinse the decontaminated sampling apparatus with deionized water. Allow the rinsate to drain from the sampling apparatus directly into the sample bottle or into a secondary container which is then poured into the sample bottle;

3. Specify on the chain-of-custody (COC) form the same analytical methods for rinsate samples as is specified for the groundwater samples;

4. Assign the rinsate sample an identification number and label as rinsate samples; and

5. Place the rinsate sample in a chilled cooler and ship it to the laboratory with the other samples.

5.9.2 Field Blanks

Field blanks are used to assess the contamination of samples during sample collection and are prepared at a sampling location by pouring decontamination source water into the sample bottle. The field blank sample should be analyzed by the same methods as the groundwater samples. An identification number/sample name shall be assigned and recorded in the logbook and the groundwater sample location where the field blank was prepared should also be recorded. The frequency of the field blank samples will be identified in the project SAP.

5.9.3 Trip Blanks

Trip blanks are volatile organic samples that are prepared in the laboratory using analyte-free water. Trip blanks are analyzed to assess VOC contamination of samples during transport and are used only when VOCs are suspected and being analyzed in the groundwater samples. One trip blank will be included for each cooler that contains samples for VOC analysis. At no time should the trip blanks be opened by field personnel.

5.9.4 Field Duplicate Samples

Field duplicate samples are collected to assess the precision of field and laboratory components of field samples. When collecting a duplicate groundwater sample, the original and duplicate sample containers should be filled simultaneously, or as close to simultaneous as possible, by moving the discharge tubing or bailer back and forth over each container until they are full.

The duplicate sample is handled and preserved in the same manner as the primary sample and assigned a sample number, stored in a chilled cooler, and shipped to the laboratory with the

PRINTED COPIES ARE UNCONTROLLED. CONTROLLED COPY IS AVAILABLE ON COMPANY INTRANET

other samples. Whenever possible, the sample identification numbers for the investigation sample and its duplicate are independent such that the receiving laboratory is not able to distinguish which samples are duplicates prior to analysis. The frequency of the field duplicate samples will be identified in the project SAP.

5.9.5 Matrix Spike / Matrix Spike Duplicate Samples

An extra volume of sample media may be collected during the sampling event for performance of MS/MSD or MS/lab duplicate analyses by the laboratory to assess laboratory accuracy, precision, and matrix interference. Aqueous MS/MSDs are collected in triplicate volume using the same sample procedures as field duplicates. MS/MSDs must be identified using the same identification as the parent sample and must be identified on the COC form to inform the laboratory that the sample is intended to be used for spiking. Samples chosen for spiking should be representative of the matrix indicative of site conditions. MS/MSDs are collected, preserved, transported, and documented in the same manner as the samples. The frequency of the MS/MSD samples will be identified in the project SAP.

6.0 RECORDS

Document information collected during groundwater sampling in logbooks or on the groundwater sampling form provided in Attachment 1. Information to be recorded includes the following:

- Identification of well
- Well depth
- Static water level depth
- Purge volume and pumping rate
- Stable water level during sampling
- Time that the well was purged
- Sample name/identification numbers
- Well purging/sampling equipment
- Date and time of collection
- Field observations
- Name of personnel
- Weather conditions

Copies of the groundwater sampling forms should be maintained by the Field Team Leader through the duration of field sampling activities and provided to the CTO Manager at the completion of the

PRINTED COPIES ARE UNCONTROLLED. CONTROLLED COPY IS AVAILABLE ON COMPANY INTRANET

groundwater sampling event. Groundwater sampling forms for each sampling event should be maintained with the permanent site records.

7.0 HEALTH AND SAFETY

Depending upon the site-specific contaminants, various protective programs must be implemented prior to sampling the first well. Review the site-specific health and safety plan (HASP) paying particular attention to the control measures planned for the well sampling tasks. Conduct preliminary area monitoring of wells to determine the potential hazard to sampling personnel. If significant contamination is observed, minimize contact with potential contaminants in both the vapor phase and liquid matrix through the use of respirators and disposable clothing.

Safety glasses with splash shields or goggles, disposable gloves, and steel-toe boots shall be worn during all groundwater sampling events, unless a higher level of personal protective equipment (PPE) is designated in the site-specific HASP.

Groundwater monitoring wells may be located in overgrown and/or wooded areas. Biological hazards such as poison ivy may be present. Such wells should be approached and opened with caution, in case insects or a snake have nested inside a well's protective casing.

Depending upon the type of contaminant expected or determined in previous sampling efforts, employ the following safe work practices:

- Avoid skin contact with and/or incidental ingestion of purge water.
- Wear long-sleeved protective gloves and splash protection (i.e., Saranex or splash suits and face shields) as warranted.
- Use eye protection and gloves when handling acid or caustic preservatives.
- Avoid breathing constituents venting from the well by approaching upwind, and/or by use of respiratory protection.
- If historical knowledge or evidence of free-phase is present, evaluate the well headspace with a flame or photo ionization detector prior to sampling.

PRINTED COPIES ARE UNCONTROLLED. CONTROLLED COPY IS AVAILABLE ON COMPANY INTRANET

- If monitoring results indicate organic vapors that exceed action levels as specified in the HASP, sampling activities may need to be conducted in Level C protection. The site safety officer and/or field manager should be notified and a determination made based on protocols in the HASP for proper PPE or to use other methods to mitigate potential exposure during sampling. At a minimum, use skin protection, such as Tyvek or other media that is protective against the encountered media.

8.0 REFERENCES

Department of Defense, United States (DoD). 2005. *Uniform Federal Policy for Quality Assurance Project Plans, Part 1: UFP-QAPP Manual*. Final Version 1. DoD: DTIC ADA 427785, EPA-505-B-04-900A. In conjunction with the U.S. Environmental Protection Agency and the Department of Energy. Washington: Intergovernmental Data Quality Task Force. March. On-line updates available at: http://www.epa.gov/fedfac/pdf/-ufp_qapp_v1_0305.pdf.

Department of the Navy (DON). 2007. *Navy Environmental and Natural Resources Program Manual*. OPNAV Instruction 5090.1c. October.

United States Environmental Protection Agency. 1982. *Handbook for Sampling and Sample Preservation of Water and Wastewater.* EPA-600/4-82-029. Cincinnati: EPA Office of Research and Development, Environmental Monitoring and Support Laboratory.

United States Environmental Protection Agency, Region 4. 2011. Groundwater Sampling, SESDPROC-301-R2.

9.0 ATTACHMENTS

Attachment 1 Groundwater Sampling Form

Attachment 1

Example Well Development and Groundwater Sampling Form

Attachment 1: Example Groundwater Sampling Form

DATE:	JOB NUMBER:	PHASE:	TASK:
PROJECT:	EVENT:		
WELL ID:	LOCATION:		
WEATHER CONDITIONS:	AMBIENT TEMP:		
REVIEWED BY:	PERSONNEL:		

WELL DIA:	WELL DEVELOPMENT	
TOTAL DEPTH from TOC (ft.):	START:	FINISH:
DEPTH TO WATER from TOC (ft.):	VOLUME PURGED (gal):	
LENGTH OF WATER COL. (ft.):	GROUNDWATER SAMPLING	
1 VOLUME OF WATER (gal):	START:	FINISH:
3 VOLUMES OF WATER (gal):	VOLUME PURGED (gal):	
	ANALYSIS:	

MNA FIELD RESULTS

FERROUS IRON	mg/L	CHLORIDE	mg/L		mg/L
SULFIDE	mg/L	ALKALINITY	mg/L		mg/L
SULFATE	mg/L	CO_2	mg/L		mg/L

IN-SITU TESTING

Circle one: DEVELOPMENT SAMPLING ☐ Bailer ☐ Pump Description:

Time (hh:mm):												
pH (units):												
Conductivity (mS/cm):												
Turbidity (NTU):												
DO (mg/L): Horiba												
YSI												
Temperature (C°):												
ORP (mV):												
Volume Purged (gal):												
Depth to Water (ft):												
Orion ORP: mV												
E_H												
Rel mV												
								Well Goes Dry While Purging ☐				

SAMPLE DATA

☐ Bailer ☐ Pump Description:

Sample ID	Date (m/d/y)	Time (hh:mm)	Bottles (total to lab)	Filtered (0.45 μm)	Remarks

Purging/Sampling Device Decon Process:

COMMENTS:

Purge water placed in drum#_____

Standard Operating Procedure SOP-3-17
Water Quality Parameter Testing for Groundwater Sampling

1.0 PURPOSE

This standard operating procedure (SOP) represents minimum standard of practice. State and federal requirements may vary, and this SOP does not replace state and federal requirements that must be consulted before work begins. Further, if a project-specific work plan has been created, the work plan should be considered the ruling document. This SOP may be modified to meet specific regulatory, client, or project specific criteria.

If there are procedures whether it be from Resolution Consultants, state and/or federal that are not addressed in this SOP and are applicable to water quality parameter testing, then those procedures may be added as an appendix to the project-specific Sampling and Analysis Plan (SAP).

2.0 SCOPE

This procedure provides guidance for expected sampling methods and protocols by all personnel related to the measurement of water quality parameters.

Field measurements of water quality parameters are commonly performed to evaluate surface water and groundwater. These tests are often performed to evaluate basic water quality parameters, to evaluate natural attenuation parameters, and to assess the presence of pore water entering a well.

As professional guidance for specific activities, this procedure is not intended to obviate the need for professional judgment during unforeseen circumstances. Deviations from this procedure while planning or executing planned activities must be approved by either the Contract Task Order (CTO) Manager or the Quality Assurance (QA) Manager, and documented.

3.0 DEFINITIONS

3.1 Barometric Pressure (BP)

The density of the atmosphere, which varies according to altitude and weather conditions.

3.2 Conductivity/Specific Conductance

A measure of the ability of water to pass electrical current, which increases with the amount of dissolved ionic substances (i.e., salts). Conductivity is inversely related to the resistance of a solution and is measured in units of mhos per centimeter (mhos/cm) (inverse ohms/cm, Siemens/cm). The conductivity of water increases with increasing temperature.

Specific Conductance is corrected for 25 degrees Celsius (°C); for this reason, it is best to record Specific Conductance. If Conductivity is recorded, the temperature of the sample MUST recorded.

3.3 Dissolved Oxygen (DO)

The amount of oxygen present in water and available for respiration. DO is typically measured in milligrams per liter (mg/L). Oxygen is less soluble in warm and salty waters, so the instrument compensates the apparent percent saturation for changes in temperature and conductivity. Most probes measure the current resulting from the electrochemical reduction of oxygen (at a gold cathode) diffusing through a selective membrane. Because oxygen is being removed from the sample to perform the measurement, sample flow is required to prevent false low readings due to depletion of oxygen in the solution in front of the probe. Optical DO probes do not remove oxygen from the sample and are less affected by salts. The common range of DO in groundwater is 0.0 to 3.0 mg/L. Measurements outside of this range suggest that the meter may not be operating correctly.

3.4 Nephelometric Turbidity Unit (NTU)

The measurement of light passing through a sample based on the scattering of light caused by suspended particles.

3.5 pH

A measure of acidity and alkalinity of a solution using a logarithmic scale on which a value of 7 represents neutrality, lower numbers indicate increasing acidity, and higher numbers are increasingly basic.

3.6 Oxidation-Reduction Potential (ORP)

Also known as redox or eH, ORP is a measurement of the potential for a reaction to occur, which generally indicates the oxygen status of a sample. The probe consists of a platinum electrode, the potential of which is measured with respect to a reference electrode that rapidly equilibrates with the potential of the sample solution. A positive value indicates that oxygen is present. A negative value indicates an anaerobic environment or reducing condition. For this reason, negative ORP readings should be associated with DO readings of less than 0.5 mg/l; with negative ORP readings the water may exhibit a sulfur odor or gray color. Positive ORP readings should be associated with DO readings greater than 0.5 mg/L and lack of sulfur odors. Because of the complex relationship between ORP and temperature, no compensation is attempted; it is thus best to report both the ORP and temperature of a water sample.

PRINTED COPIES ARE UNCONTROLLED. CONTROLLED COPY IS AVAILABLE ON COMPANY INTRANET

3.7 Total Dissolved Solids

A measure of the quantity of materials in water that are either dissolved or too small to be filtered.

3.8 Turbidity

Measure of the clarity of water in NTUs. Potable water typically has NTU values between 0.0 and 0.3 NTUs, depending on the state or regulatory program.

4.0 RESPONSIBILITIES

The CTO Manager, or designee, is responsible for ensuring that these standard groundwater sampling activities are followed and shall review all groundwater sampling forms at the conclusion of a sampling event. The CTO Manager is responsible for ensuring that all personnel involved in monitoring well sampling shall have the appropriate education, experience, and training to perform their assigned tasks. The QA Manager or Technical Director is responsible for ensuring overall compliance with this procedure. The Field Manager is responsible for ensuring that all project field staff follows these procedures.

Field sampling personnel are responsible for the implementation of this procedure. Personnel are required to be knowledgeable of the procedures in this SOP. Training and familiarization with this SOP shall be documented in the training file for each employee. The field sampler and/or Field Manager is responsible for directly supervising the calibration procedures to ensure that they are conducted according to this procedure, and for recording all pertinent data. If deviations from the procedure are required because of anomalous field conditions, they must first be approved by the CTO Manager, QA Manager, or Technical Director and then documented in the field logbook and associated report or equivalent document.

5.0 PROCEDURES

5.1 Purpose

The procedures will vary depending on parameters being measured, method of sampling, and the method of measurement used. The information here is a general guidance and the site-specific documents and manufacturer manuals supersede these procedures.

5.2 Cautions

Improper use of water quality testing equipment could result in equipment damage or compromised sampling results. Personnel should be trained to operate the test equipment being used for a field operation and should be trained in the proper techniques for collecting and

logging water quality parameters. Personnel should also be able to recognize problems with test equipment and have someone available for basic troubleshooting and repair.

5.3 Interferences

During field testing, water quality data that is documented from field testing equipment may be influenced by certain outside factors that are unrelated to the actual site water quality. Such parameters and equipment include the following:

pH Meters

- Coatings of oils, greases, and particles may impair the electrode's response. Pat the electrode bulb dry with lint-free paper or cloth and rinse with de-ionized water. For cleaning hard-to-remove films, use isopropyl alcohol very sparingly so that the electronic surface is not damaged.

- Poorly buffered solutions with low specific conductance (less than 200 microsiemens per centimeter) may cause fluctuations in the pH readings. Equilibrate electrode by immersing in several aliquots of sample before taking pH.

Dissolved Oxygen

- Dissolved gases (e.g., hydrogen sulfide, halogens, sulfur dioxide) are a factor with the performance of DO probes. The effect is less pronounced on optical DO meters. Meter type and potential interferences should be considered based on potential sulfate/sulfide or nitrate/nitrite reducing environments.

- Exposure of the sample to the atmosphere will cause elevated DO measurements.

Turbidity Meter

- If the weather is warm and humidity is high, condensation may collect on the cuvet. To avoid this, allow the sample to warm and dry the outside of the cuvet before making the measurement. One method used to accomplish this is to place the cuvet against one's body (armpits work well).

Temperature

- Sample temperature will change rapidly when there are significant differences between the sample and ambient air.

PRINTED COPIES ARE UNCONTROLLED. CONTROLLED COPY IS AVAILABLE ON COMPANY INTRANET

5.4 Apparatus and Materials

Field personnel shall consult the site work plan and SAP to review the equipment requirements for the sampling procedures to be followed during the sampling effort. The specific apparatus and materials required will depend on the water quality parameters being monitored. Table 1 shows the common equipment used in water quality parameter testing.

Table 1
Water Quality Parameter Testing — Common Equipment

Water Quality Parameter Instrument	Calibration Standards Required	Other Equipment
pH Meter	Yes - 2 or 3 Point Standards depending on groundwater range. Calibration must cover the range to be measured. If samples are above or below typical buffer standards (4, 7 and 10), special order buffers that fall outside groundwater pH range.	Container or flow thru cell for holding sample
Specific Conductance	Yes	Container or flow thru cell for holding sample
ORP Meter	Yes	Container or flow thru cell for holding sample
Turbidity Meter	Yes	Container or flow thru cell for holding sample
DO	No	Container or flow thru cell for holding sample
Thermometer	No	Container or flow thru cell for holding sample
Flow Rate	No	Calibrated Container

Notes:
ORP = Oxidation-Reduction Potential
DO = Dissolved Oxygen

5.5 Instrument or Method Calibration

Most monitoring instruments require calibration before use, and this calibration must be conducted in the field under the ambient climatic conditions that will be present during field sampling. Calibration of monitoring instruments shall be performed in accordance with the manufacturer's specifications and recorded in the provided form in Attachment 1. Site-specific instrument calibration requirements should be specified in the SAP. The following minimum calibration requirements apply to the various types of meters used to gather water quality measurements.

Initial Calibration (IC): Before use, the instrument or meter electronics are adjusted (manually or automatically) to a theoretical value (e.g., DO saturation) or a known value of a

PRINTED COPIES ARE UNCONTROLLED. CONTROLLED COPY IS AVAILABLE ON COMPANY INTRANET

calibration standard. An IC is performed in preparation for the first use of an instrument or if a calibration verification does not meet acceptance criteria.

Initial Calibration Verification (ICV): The instrument or meter calibration is checked or verified directly following IC by measuring a calibration standard of known value as if it were a sample and comparing the measured result to the calibration acceptance criteria for the instrument/parameter. If an ICV fails to meet acceptance criteria, immediately recalibrate the instrument using the applicable initial calibration procedure or remove it from service.

Continuing Calibration Verification (CCV): After use, the instrument or meter calibration is checked or verified by measuring a calibration standard of known value as if it were a sample and comparing the measured result to the calibration acceptance criteria for the instrument/parameter.

5.5.1 Calibration Checks

Calibration checks are conducted by measuring a known standard. They must be completed after calibration and should be performed at least one other time (i.e., after lunch) and anytime suspect measurements are encountered. Table 2 provides general acceptance ranges to be used during calibration checks. If a meter is found to be outside of the acceptance range, the meter **must** be recalibrated. If the meter remains out of range, the project manager and/or the supplier of the meter should be contacted to determine alternative measures.

Table 2
Calibration Check Acceptance Limits

Parameter	Acceptance Criteria
Dissolved Oxygen	±0.3 mg/L of the theoretical oxygen solubility
Oxidation-Reduction Potential	±10 mv from the theoretical standard value at that temperature
pH	±0.2 Standard pH Units
Specific Conductance	±5% of the standard
Turbidity	0.1 to 10 NTU: ±10% of the standard 11 to 40 NTU: ±8% of the standard 41 to 100 NTU: ±6.5% of the standard

Notes:
mg/L = milligrams per liter
mv = millivolts
NTU = nephelometric turbidity units

5.5.2 Possible and Suspected Ranges

The concentration for each parameter range should be known so that concentrations outside of the range can be noted. Table 3 presents the maximum range of the parameter in groundwater. The table also presents the suspected range. Measurements outside of the maximum/minimum range should be considered in error and the measurement method should be checked. Concentrations outside the normal range should be treated as suspect but may be the result of contaminant impact. For example, a pH of 2.0 would be out of the normally suspected range for groundwater but not at a site impacted with an acid.

Table 3
Minimum and Maximum Result Ranges

Parameter	Units	Possible Min	Possible Max	Normal Min	Normal Max	Notes
Dissolved Oxygen	mg/L	0.0	14.6 (0°C) 10.1 (15°C) 8.3 (2°C)	0.0	5	The colder the sample, the higher the DO reading. DO greater than 1 mg/L, ORP positive should not have sulfur odor, sulfide, ferrous iron and/or gray color. DO less than 1 mg/L, ORP negative, may have sulfur odor, sulfide, ferrous iron and/or gray color.
pH	SU	0	14	5	9	pH values exceeding 10 could indicate grout contamination
ORP	mv					DO greater than 1 mg/L, ORP positive should not have sulfur odor, sulfide, ferrous iron and/or gray color. DO less than 1 mg/L, ORP negative, may have sulfur odor, sulfide, ferrous iron and/or gray color.
Specific Conductance	µS/cm			varies	varies	
Temperature	°C	0	100	5	30	
Turbidity	NTU	0	Greater than 1,000	0	Greater than 1,000	50 NTU or greater suggests cloudiness.

Notes:

mg/L = milligrams per liter
°C = degrees Celsius
DO = dissolved oxygen
SU = standard units
ORP = oxidation reduction potential
mv = millivolts
mS/cm = micro Siemens per cm
NTU = nephelometric turbidity units

PRINTED COPIES ARE UNCONTROLLED. CONTROLLED COPY IS AVAILABLE ON COMPANY INTRANET

5.5.3 Field Instruments and Calibration Criteria

The calibration acceptance criteria for each instrument are summarized in Table 4 along with special considerations related to each field instrument.

Table 4
Calibration Check Acceptance Limits

Parameter	Acceptance Criteria
Dissolved Oxygen	±0.3 mg/L of the theoretical oxygen solubility.
Oxidation-Reduction Potential	±10 mv from the theoretical standard value at that temperature.
pH	±0.2 Standard pH Units
Specific Conductance	±5% of the standard
Turbidity	0.1 to 10 NTU: ±10% of the standard 11 to 40 NTU: ±8% of the standard 41 to 100 NTU: ±6.5% of the standard

Notes:
mg/L = milligrams per liter
mv = millivolts
NTU = nephelometric turbidity units

pH Meters

- For the most accurate of pH measurements, pH meters should receive a three-point calibration. However, if a two-point calibration will bracket the groundwater pH of the site, a two-point calibration is acceptable. Three-point calibrations typically include calibrating to solutions of pH 7.00, 4.00, and 10.00. If groundwater pH is outside the calibration range of the solution standards, special buffers must be ordered to bracket the pH. Some meters will report the slope of the calibration and this may be used in checking the meter calibration (refer to the meter's manual). When performing an ICV, the result must be within +/- 0.2 pH units of the stated buffer value.

- pH meters should be calibrated across the range of values to be measured. The maximum and minimum calibration solutions shall be outside the range of anticipated values. For example, if the expected range is between 7.50 and 9.00, the 7.00 and the 10.00 standard should be used for calibration. Perform the IC using at least two buffers, and always use the pH 7.00 buffer first. A reading that is above the maximum (or below the minimum) calibration standard is an estimate only and is not valid. This condition requires obtaining a new standard that is above (or below) the reported value, depending on the measurement.

PRINTED COPIES ARE UNCONTROLLED. CONTROLLED COPY IS AVAILABLE ON COMPANY INTRANET

- A percent slope of less than 90 percent indicates a bad electrode that must be changed or repaired. If percent slope cannot be determined, or the manufacturer's optimum specifications are different, follow the manufacturer's recommendation for maintaining optimum meter performance.

Specific Conductivity Meters

- For IC, when the sample measurements are expected to be 100 microsiemens per centimeter (µS/cm) or greater, use two standard potassium chloride (KCl) solutions that bracket the range of expected sample conductivities. Calibrate the instrument with the first standard. Verify the calibration of the instrument with the second standard, bracketing the range of expected sample values.

- If the instrument can be calibrated with more than one standard, choose additional calibration standards within the range of expected sample values.

- When the sample measurements are expected to be less than 100 µS/cm, a lower bracket is not required, but one standard (KCl) solution that is within the range of expected measurements must be used for the IC and the ICV.

- Accept the calibration if the meter reads within +/- 5 percent of the value of any calibration standard used to verify the calibration.

- Most field instruments read conductivity directly. Record all readings and calculations in the calibration records.

- For CCV, check the meter with at least one KCl standard with a specific conductance in the range of conductivity measured in environmental samples. The reading for the calibration verification must also be within +/- 5 percent of the standard value.

- If new environmental samples are encountered outside the range of the IC, verify the instrument calibration with two standards bracketing the range of sample values. If these calibration verifications fail, recalibrate the instrument.

PRINTED COPIES ARE UNCONTROLLED. CONTROLLED COPY IS AVAILABLE ON COMPANY INTRANET

Dissolved Oxygen Meters

- Before calibrating, check the probe membrane for bubbles, tears, or wrinkles. These conditions require replacement of the membrane in accordance with the manufacturer's directions.

- If the meter provides readings that are off-scale, will not calibrate, or drift, check the leads, contacts, etc., for corrosion and/or short circuits. These conditions require replacement maintenance in accordance with the manufacturer's directions.
- Most DO meters must be calibrated based on an environment of 100 percent humidity and a known elevation and barometric pressure (BP).

- For 100 percent humidity, place the probe in the calibration container with a moist towel and allow the probe to remain, undisturbed, for 10 to 20 minutes.

- The IC is an air calibration at 100% saturation. Before use, verify the meter calibration in water-saturated air to make sure it is properly calibrated and operating correctly. Make a similar verification at the end of the day or sampling event. Follow the manufacturer's instructions for your specific instrument. Allow an appropriate warm up period before IC. Wet the inside of the calibration chamber with water, pour out the excess water (leave a few drops), wipe any droplets off the membrane/sensor and insert the sensor into the chamber (this ensures 100 percent humidity). Allow adequate time for the DO sensor and the air inside the calibration chamber to equilibrate. Once the probe/calibration chamber is stable at ambient temperature, check the air temperature and determine, from the DO versus temperature table (see Attachment 2) what DO should measure. The acceptance criterion for DO ICV is +/- 0.3 mg/L.

- Use the same procedure as above for CCV.

ORP Meters

- Verify electrode response before use in the field.

- Equilibrate the standard solution to the temperature of the sample. The standard solution is based on a 25°C temperature; however, the calibration solution standard's value will require adjustment based on the temperature.

- Immerse the electrodes and gently stir the standard solution in a beaker (or flow cell). Turn the meter on, placing the function switch in the millivolt (mv) mode.

- Let the electrode equilibrate and record the reading to the nearest millivolt. The reading must be within ±10 mv from the theoretical redox standard value at that temperature. If not, determine the problem and correct it before proceeding. Switch to temperature display and read the value.

- Record the mv reading and temperature in the field notebook or in form. Rinse the electrode with distilled water and proceed with the sample measurement, unless using a flow cell. If a flow cell is used, rinse between sample locations.

Turbidity Meters

- Perform an initial calibration using at least two primary standards.

- If the instrument cannot be calibrated with two standards, calibrate the instrument with one standard and verify with a second standard.

- Perform an ICV by reading at least one primary standard as a sample. The acceptance criterion for the ICV depends on the range of turbidity of the standard value:

  1. Standard Value = 0.1 to 10 NTU: the response must be within 10 percent of the standard;

  2. Standard Value = 11 to 40 NTU: the response must be within 8 percent of the standard;

  3. Standard Value = 41 to 100 NTU: the response must be within 6.5 percent of the standard; and

  4. Standard Value greater than 100 NTU: the response must be within 5 percent of the standard.

- Determining the Values of Secondary Standards: Use only those certified by the manufacturer for a specific instrument. Secondary standards may be used for CCVs.

PRINTED COPIES ARE UNCONTROLLED. CONTROLLED COPY IS AVAILABLE ON COMPANY INTRANET

To initially determine the value of a secondary standard, assign the value that is determined immediately after an ICV or verification with primary standards. This is done by reading the secondary standard as a sample. This result must be within the manufacturer's stated tolerance range and +/- 10 percent of the assigned standard value. If the +/- 10 percent criterion is not met, assign this reading as the value of the standard. If the reading is outside the manufacturer's stated tolerance range, discard the secondary standard.

- CCV: Perform a CCV using at least one primary or secondary standard. The calibration acceptance criteria are the same as those for an ICV.

5.6 Direct Measurements

Direct measurements with meters are the most common methods and can be accomplished by placing a sample in a container with the probe or by allowing the water to flow past the probe in a flow cell. The use of a flow-through cell improves measurement quality by allowing the constant flow of water over the probes and reduces interaction of the sample with the atmosphere. Sample cups should be avoided. The quantity of samples, timing, and methodology should be described in the project SAP.

Following calibration of required probes, connect the bottom flow-cell port to the discharge line of the pump. Connect the top port to a discharge line directed to a bucket to collect the purge water. Allow the flow cell to completely fill. As the water flows over the probe, record the measurements. Continue to record the measurements at regular intervals, as specified in the SAP.

When the ambient air temperatures are much higher or lower than the temperature of the water sample, it is best to keep the length of tubing between the wellhead and the flow cell as short as possible to prevent heating or cooling of the water. Tubing and flow-through cell should not be exposed to direct sunlight, particularly in the summer, if at all possible, to avoid heating of water samples.

5.7 Data Acquisitions, Calculations, and Data Reduction

5.7.1 Specific Conductivity Correction Factions

If the meter does not automatically correct for temperature (i.e., read Specific Conductivity) record Conductivity and adjust for temperature upon returning to the office. The following equation can be used to convert Conductivity to Specific Conductivity.

$$K = \frac{(Km)(C))}{1 + 0.0191(\mathrm{T} - 25)}$$

Where:

K	=	Conductivity in μmhos/cm at 25°C
Km	=	Measured conductivity in μmhos/cm at T degrees Celsius
C	=	Cell constant
T	=	Measured temperature of the sample in degrees Celsius;

If the cell constant is 1, the formula for determining conductivity becomes:

$$K = \frac{(Km)}{1 + 0.0191(\mathrm{T} - 25)}$$

5.7.2 Percentage Difference Calculation

For evaluating slope of readings from either a flow cell or a sample cup.

$$\%Difference = \frac{(Highest\ Value - Lowest\ Value)}{(Highest\ Value)}\ x\ 100$$

5.7.3 Convert mm mercury (mmHG) to inches mercury (inHG)

$$mmHG = inHG\ x\ 25.4$$

5.7.4 True Barometric Pressure

For converting BP obtained from a public domain source that is expressed in BP at sea level to BP at the subject site.

$$TrueBP = (BP) - \frac{(2.5\ x\ [Local\ Altitude])}{100}$$

Where: BP is in mmHG and Local Altitude is in feet

Example: BP at site A is 30.49 inHg and elevation is 544 feet, calculate TrueBP

Convert inHG to mmgHG:

mmHg = 30.49 inHg x 25.4 = 774.4 mmHg

Calculate True BP:

TrueBP = (774.4 mmHg) – [2.5 * (544 /100)] = 774.4-13.6 = 760.8 mmHg

6.0 RECORDS

Data will be recorded promptly, legibly, and in indelible ink on the appropriate logbooks and forms. At the completion of a field effort, all logbooks, field data forms, and calibration logs shall be scanned and made electronically available to the project team. The original field forms, calibrations logs, and log book will be maintained in the project file.

7.0 HEALTH AND SAFETY

Detailed Health and Safety requirements can be found in the site specific Health and Safety Plan. Ensure that a Safe Work Assessment and Permit form is filled out daily prior to any work in the field and reviewed with all project personnel in a daily safety brief.

Safety glasses with side shields or goggles and disposable gloves shall be worn during calibration activities.

8.0 REFERENCES

None

9.0 ATTACHMENTS

Attachment 1: Example Field Instrument Calibration Form
Attachment 2: Solubility of Oxygen at Given Temperatures
Attachment 3: Example Field Data Form

PRINTED COPIES ARE UNCONTROLLED. CONTROLLED COPY IS AVAILABLE ON COMPANY INTRANET

Attachment 1

Example Field Instrument Calibration Form

Field Instrument Calibration Form

Calibrated by: _____ Equipment (Make/Model/Serial#): _____

Date: _____ Equipment (Make/Model/Serial#): _____

pH (su) — Standard: ± 0.2 standard units

Initial Calibration / Initial Calibration Verification

	Hach SL	Reading	Pine SL	Reading
pH7				
pH4				

Continuing Calibration Verification

	Hach SL	Reading	Deviation	Acceptable Variance (Y/N)
pH7				
pH4				

DO (mg/L) — Standard: ± 0.3 mg/L of theoretical*

IC (Temp:)		ICV (Temp:)	
Saturation (%)	Reading (%)	Theoretical (mg/L)	Reading (mg/L)
100			

CCV (Temp:)

Saturation (%)	Reading (%)	Deviation	Acceptable Variance (Y/N)
100			

Theoretical (mg/L)	Reading (mg/L)	Deviation	Acceptable Variance (Y/N)

ORP (mV) — Standard: NA

IC (Zobell SL:)		ICV (Pine SL:)	
TCS (Std/Temp)	Reading	TCS (Std/Temp)	Reading

CCV (Zobell SL:)

TCS (Std/Temp)	Reading	Deviation	Acceptable Variance (Y/N)

Turbidity (ntu) — Standard: ±10% of Standard

Initial Calibration

Standard	Reading

Continuing Calibration Verification

Standard	Reading	Deviation	Acceptable Variance (Y/N)

Conductivity (ms^{C}/cm) — Standard: ± 5% of standard value

IC (YSI SL:)		ICV (Pine SL:)	
Standard	Reading	Standard	Reading

CCV (YSI SL:)

Standard	Reading	Deviation	Acceptable Variance (Y/N)

Comments:

Notes:

SL	solution lot	su	standard units	ntu	Nephelometric Turbidity Units
TCS	temperature corrected standard	mV	millivolts	°C	degrees Celsius
Std	standard	%	percent	ms°/cm	millisiemens per centimeter (temperature corrected)
Temp	temperature	mg/L	milligrams per liter	*	Theoretical value

Attachment 2

Solubility of Oxygen at Given Temperatures

Field Measurement of Dissolved Oxygen

Solubility of Oxygen in Water at Atmospheric Pressure			
Temperature	**Oxygen Solubility**	**Temperature**	**Oxygen Solubility**
°C	**mg/L**	**°C**	**mg/L**
0.0	14.621	26.0	8.113
1.0	14.216	27.0	7.968
2.0	13.829	28.0	7.827
3.0	13.460	29.0	7.691
4.0	13.107	30.0	7.559
5.0	12.770	31.0	7.430
6.0	12.447	32.0	7.305
7.0	12.139	33.0	7.183
8.0	11.843	34.0	7.065
9.0	11.559	35.0	6.950
10.0	11.288	36.0	6.837
11.0	11.027	37.0	6.727
12.0	10.777	38.0	6.620
13.0	10.537	39.0	6.515
14.0	10.306	40.0	6.412
15.0	10.084	41.0	6.312
16.0	9.870	42.0	6.213
17.0	9.665	43.0	6.116
18.0	9.467	44.0	6.021
19.0	9.276	45.0	5.927
20.0	9.092	46.0	5.835
21.0	8.915	47.0	5.744
22.0	8.743	48.0	5.654
23.0	8.578	49.0	5.565
24.0	8.418	50.0	5.477
25.0	8.263		

Notes:

The table provides three decimals to aid interpolation

Under equilibrium conditions, the partial pressure of oxygen in air-saturated water is equal to that of the oxygen in water saturated

°C = degrees Celsius

mg/L = milligrams per liter

Attachment 3
Example Field Data Form

WELL DEVELOPMENT & GROUNDWATER SAMPLING FORM

DATE:	JOB NUMBER:	EQUIPMENT (Make/Model #/Serial #):
PROJECT:	EVENT:	/ /
WELL ID:	LOCATION:	/ /
WEATHER CONDITIONS:	AMBIENT TEMP:	/ /
REVIEWED BY:	PERSONNEL:	/ /

WELL DIA:	**WELL DEVELOPMENT**	
TOTAL DEPTH from TOC (ft.):	START:	FINISH:
DEPTH TO WATER from TOC (ft.):	VOLUME PURGED (gal):	
LENGTH OF WATER COL. (ft.):	**GROUNDWATER SAMPLING**	
1 VOLUME OF WATER (gal):	START:	FINISH:
3 VOLUMES OF WATER (gal):	VOLUME PURGED (gal):	
	ANALYSIS:	

WELL DEVELOPMENT PARAMETERS		GW SAMPLING PARAMETERS	
Temperature:	± 1.0° C	Temperature:	± 0.2° C
pH:	± 0.5 standard units	pH:	± 0.2 standard units
Specific Conductance:	± 10% of the past measurement	Specific Conductance:	± 5% of the past measurement
Turbidity:	relatively stable	DO:	≤ 20% saturation
		ORP:	± 10 millivolts
		Turbidity:	≤ 10 NTU

IN-SITU TESTING

Circle one: DEVELOPMENT SAMPLING ☐ Bailer ☐ Pump Description:

Time (hh:mm):												
pH (units):												
Conductivity (mS/cm):												
Turbidity (NTU):												
DO (mg/L): YSI 556												
DO (mg/L): YSI 550												
Temperature (C°):												
ORP (mV):												
Volume Purged (gal):												
Depth to Water (ft):												
								Well Goes Dry While Purging ☐				

SAMPLE DATA

☐ Bailer ☐ Pump Description:

Sample ID	Date (m/d/y)	Time (hh:mm)	Bottles (total to lab)	Filtered (0.45 µm)	Remarks
Purging/Sampling Device Decon Process:					

COMMENTS:

Purge water placed in drum#_____

Standard Operating Procedures SOP-3-18 (MS)
Direct Push Sampling Techniques

1.0 PURPOSE

This standard operating procedure provides procedures for use of direct push sampling methods for collecting soil and groundwater samples. If there are additional procedures required by state and/or federal that are not addressed in this Standard Operating Procedure (SOP) and are applicable to direct push sampling then those procedures may be added as an appendix to the project specific Sampling and Analysis Plan.

2.0 SCOPE

This procedure shall serve as management-approved professional guidance and is consistent with protocol in the Uniform Federal Policy-Quality Assurance Project Plan (DoD 2005). As professional guidance for specific activities, this procedure is not intended to obviate the need for professional judgment during unforeseen circumstances. Deviations from this procedure while planning or executing planned activities must be approved by either the Contract Task Order (CTO) Manager or the Quality Assurance (QA) Manager, and documented.

The physical nature of the subsurface materials, water depth, regulatory buy in, data quality objectives, and other issues will play an important part in deciding whether direct push methods are suitable for the project and should be discussed in the project-specific planning documents. Before field implementation of direct push methods, the following aspects will need to be considered:

- Permits required by local/state water Board/Districts, etc.
- Waste generation and handling
- Health and safety issues associated with chemical and physical hazards
- Locating subsurface and overhead utilities before field activities and adjust locations as necessary to account for impediments and obstacles.

If direct push methods are used for constructing small diameter monitoring wells, the following aspects should also be considered:

- Well locations and depths
- Permanent or temporary wells
- Screen length(s)
- Well completion specifications.

PRINTED COPIES ARE UNCONTROLLED. CONTROLLED COPY IS AVAILABLE ON COMPANY INTRANET.

3.0 RESPONSIBILITIES

The CTO Manager is responsible for ensuring that the described direct push methods are followed and that all field personnel involved shall have the appropriate education, experience, and training to perform their assigned tasks as specified in Chief of Naval Operations Instruction 5090.1c (DON 2007).

QA Manager or Technical Director is responsible for ensuring overall compliance with this procedure.

The Field Manager is responsible for implementing or ensuring that all project field staff follow these procedures.

4.0 BACKGROUND

4.1 Direct Push Techniques

Direct push techniques (DPT) rely on use of hydraulically powered machines that utilize static and percussion forces to advance various tools in the subsurface for a variety of uses including soil and groundwater sampling, logging, grouting and materials injections. The machines are very portable and their small size makes them ideal for working inside buildings and confined areas. They are also very fast and generate very little investigative derived waste resulting in direct push methods being a very cost-effective sampling approach compared to traditional drilling methods. A variety of systems are available under several trade names, such as Geoprobe and Strataprobe. Equipment may be skid-mounted, trailered, or mounted directly on the frame of a vehicle. Major limitations of direct push techniques are their inability to penetrate rock or cobbles and a shallow maximum depth of penetration. The capabilities of direct push systems vary significantly among vendors. Consider these differences in capabilities when evaluating the method for a subsurface exploration program.

5.0 PROCEDURES

5.1 Soil Sampling

Vendors of direct push equipment offer a variety of sampling systems designed specifically for their equipment. Both continuous and discreet soil samples may be obtained using direct push sampling equipment and there are generally two methods for soil sampling, using either an open-tube sampler or closed-point sampler. The open tube sampler enables the continuous collection of soil

cores from the ground surface to a depth dependent on the core hole staying open. Upon retrieving the sampler, the plastic liner and soil core are removed, the sampler properly decontaminated, reassembled with a new liner and inserted back down the same hole to collect the next soil core. The plastic liners are split lengthwise and the soil core within is described, screened and/or sampled as specified in the project-specific planning documents. Since a new liner is used with each sampler, the potential cross-contamination risk is minimized, resulting in an inherently safe soil sampling method.

Sandy soils or material collapsing from the probe side wall can make it difficult to collect representative soil cores from significant depths with an open tube sampler. A closed-point sampler (or piston sampler) seals the leading end of the sampler with a point assembly that is held in place with a center rod. Once the sampler is advanced to the top of the sampling interval, the probe rod string is removed which disengages the piston point, allowing soil to enter the sampler. The sampler is retrieved, the plastic liner and soil core are removed and the process is repeated until reaching the desired completion depth.

5.2 Groundwater Sampling

Groundwater samples and can be collected in-situ using a groundwater sampling device or through constructing small diameter (< 1.5 inch) monitoring wells, either permanent or temporary.

In-situ Groundwater Sampling

1. Place a drive cap on the assembled direct push sampler and drive it into the subsurface.

2. Continue driving by adding probe rods until the sampler tip has been driven about one foot below the target sampling depth.

3. After reaching the groundwater depth, disengage the expendable drive point by pulling the rods back a distance of about 2 feet and remove the drive cap.

4. Lower the sensor of an electric water level indicator until the audio signal sounds and record the depth to groundwater. The measurement tape scale (0.01 ft intervals) on the water level indicator wire is read at the top of the probe rod after pulling the tape out and extending it to the ground surface.

PRINTED COPIES ARE UNCONTROLLED. CONTROLLED COPY IS AVAILABLE ON COMPANY INTRANET.

5. After recording the water level depth measurement, the indicator sensor is removed from the probe rods.

6. Lower a 0.25 to 0.375-inch OD polyethylene or Teflon tube inside the probe rods and evacuate groundwater with a peristaltic pump. When lowering tubing inside the rod string, ensure that it enters the screen interval. The leading end of the tubing will sometimes catch at the screen head giving the illusion that the bottom of the screen has been reached. An up-and-down motion combined with rotation helps move the tubing past the lip and into the screen.

7. Retrieve the sampler, clean all parts thoroughly, replace the O-rings, and prepare for the next sample.

Typically less than a gallon of water is purged until turbidity levels are stable and sampling follows. Since in-situ groundwater samples are usually collected as "screening" data and are a means to focus permanent monitoring wells, water quality parameters (pH, conductivity, turbidity, temperature) are not normally collected; however, field personnel should defer to the requirements of the project-specific planning documents. If sampling for volatile organic compounds (VOCs), the sample should not be circulated through the peristaltic pump since low level VOCs may be stripped from the sample, causing low bias in analyses. The methods described in SOP 7, *Monitoring Well Sampling* for sampling with a peristaltic pump should be adhered to.

In cases where the water depth is greater than 28 feet and the water cannot be lifted, groundwater samples may also be collected by attaching a check valve (with check ball) to the bottom end of the tubing and oscillating the tubing up and down until water exits the top of the tube.

Monitoring Well Installations with Direct Push Methods

1. Place a drive cap on the first section of 2.125-in. probe rod with an expendable drive point installed and advance the rod into the ground.

2. Continue driving by adding probe rods, with O-ring seals between each rod, until the sampler tip reaches approximately one foot below the screen installation depth.

3. After reaching the installation depth, the PVC well screen is lowered into the probe rods while adding threaded lengths of PVC riser pipe as needed. Care must be taken to tighten the threaded sections to prevent leakage at the joints. New, clean, rubber gloves are worn while handling all well screen and riser pipe materials to provide the highest quality samples from the well after installation.

4. After the screen and riser are set at the installation depth, the probe rods are retracted slightly while holding down pressure on the riser pipe. This disengages the expendable point from the bottom section of drive rod.

5. After disengaging the drive point, the screen is exposed to the aquifer. Before proceeding with the well installation, it is prudent to measure the static water level in the well. This allows for adjustment of the proper screen depth if required.

6. After assuring the proper installation depth, if pre-packed screens are not used, filter-pack sand is slowly poured within the annular space between the well screen and probe rods.

7. Filter sand is added, while retracting the probe rods, until the sand reaches approximately two feet above the screen length.

8. If the native formation is well-sorted sand, coarse enough to filter and not pass through the well screen filter sand may be unnecessary. Retracting the probe rods to approximately two feet above the top of the screen will allow collapse of the native formation around the screen.

9. Above the filter pack, a minimum two-foot thick bentonite seal is installed to prevent any infiltration from above reaching the sand pack and/or well screen. The bentonite seal is tremied from the bottom (top of the filter pack), with the high-pressure grout pump while retracting the probe rods.

10. A bentonite slurry can be used to grout the entire well annulus, or alternatively above the required minimum two-foot thick bentonite seal, the annulus can be grouted with neat cement.

PRINTED COPIES ARE UNCONTROLLED. CONTROLLED COPY IS AVAILABLE ON COMPANY INTRANET.

11. Following 24 hours, the development and sampling of the well can proceed as for typical larger diameter wells.

Small-diameter (3/4 — 1 inch) monitoring wells can be installed using direct push methods and are commonly considered permanent, depending upon local and State regulations. The limitations and abilities of wells constructed should be thoroughly understood and before using direct push methods, it should be confirmed that:

1. The method effectively protects the well screen from exposure to contaminated overburden soils during installation

2. Effective filter packing is placed around the well screen (commercially available pre-packed well screens ensure adequate filter packing around well screen).

3. The well screen to be effectively sealed against the downward infiltration of overlying groundwater or surface precipitation

4. Well materials are compatible with the intended sampling and analysis goals of the project

5. The well screen is properly sized and slotted for the needs of the project

The project-specific planning documents should evaluate the appropriateness of direct push systems and whether collected data will meet the project objectives. As part of this evaluation, regulatory concurrence/approval should also be sought.

5.3 Equipment Decontamination

To avoid cross-contamination, thoroughly decontaminate equipment used for direct push exploration and sampling. Decontaminate sampling tools and downhole equipment between each sampling event and between penetration points. At a minimum, steam clean or wash and rinse the equipment with a combination of soapy water and a double rinse of clean water. The inside of the of the sample roads is cleaned with nylon brushes and extension rods. Use clean water and phosphate-free soap, cycle the brush inside the probe rod or sample tube to remove contaminants. Rinse with clean water and allow to air dry.

PRINTED COPIES ARE UNCONTROLLED. CONTROLLED COPY IS AVAILABLE ON COMPANY INTRANET.

5.4 Borehole Abandonment

Some direct push boreholes will close naturally as the drive rods and sampling tools are withdrawn. This may occur in loose, unconsolidated soils, such as sands. Close all boreholes using one of the procedures described in this procedure, unless natural caving precludes such closure.
The three methods for closing direct push boreholes are:

1. Add granulated or pelletized bentonite and hydrate in layers, proceeding from the bottom of the hole to the surface.

2. Pour premixed cement/water (or cement/water/bentonite) mixture into the hole.

3. Fill the entire hole with granular or pelletized bentonite and hydrate by means of a previously emplaced water tube that is gradually withdrawn as water is supplied to the bentonite.

For shallow holes less than 10 feet in depth, pour a cement/water/bentonite mix directly into the opening using a funnel. For deeper holes, use a conductor (tremie) pipe to carry the grout mix to the far reaches of the borehole. Lower the conductor pipe to within 2 inches of the bottom and gradually withdraw it as grout is added, keeping the lower end of the pipe submerged in grout at all times. Seal boreholes to within 0.5 to 2.0 feet of the surface. Inspect the abandoned borehole after 24 hours to ensure that grout shrinkage does not occur. If significant shrinkage has occurred, re-grout the borehole. Fill the remaining portion of the hole with local topsoil or appropriate paving materials.

6.0 RECORDS

Record all DPT field activities in the appropriate field log book. Depending on the project objectives, soil classification may or may not be required. If it is required, complete a soil boring log as provided in Attachment 1. Monitoring wells constructed with direct push methods require both a well construction log and groundwater sampling log which are also provided in Attachments 2 and 3. Field personnel should provide copies of all completed forms to the Field Team Leader who is responsible for forwarding the forms to the CTO Manager who will review them for completeness before incorporating them into the project files.

PRINTED COPIES ARE UNCONTROLLED. CONTROLLED COPY IS AVAILABLE ON COMPANY INTRANET.

7.0 HEALTH AND SAFETY

The primary hazards associated with direct push sampling are the mechanical hazards associated with machinery. Only qualified personnel should operate the equipment and field personnel should always maintain a safe distance from it. The minimum personal protective equipment (PPE) is safety glasses, hearing protection, steel-toed boots, and a hard hat. Depending upon the site-specific contaminants, additional PPE requirements may be required as designated in the site-specific HASP.

Employ the following safe work practices:

- Avoid skin contact with and/or incidental ingestion of purge water.
- Position DPT machine downwind of bore
- Use eye protection and gloves when handling acid or caustic preservatives.
- Avoid breathing constituents venting from the borehole by positioning rig upwind between field personnel/operators and the borehole.
- If historical knowledge or evidence of free-phase is present, use a flame or photo ionization detector to ensure the breathing zone is safe.
- If monitoring results indicate organic vapors that exceed action levels as specified in the HSP, be prepared to upgrade PPE to Level C protection.

8.0 REFERENCES

Department of Defense, United States (DoD). 2005. *Uniform Federal Policy for Quality Assurance Project Plans, Part 1: UFP-QAPP Manual*. Final Version 1. DoD: DTIC ADA 427785, EPA-505-B-04-900A. In conjunction with the U. S. Environmental Protection Agency and the Department of Energy. Washington: Intergovernmental Data Quality Task Force. March. On-line updates available at: http://www.epa.gov/fedfac/pdf/-ufp_qapp_v1_0305.pdf.

9.0 ATTACHMENTS

Attachment 1 Soil Boring Log

Attachment 2 Well Construction Form

Attachment 3 Groundwater Sampling Form

Attachment 4 Geoprobe Screen Point 22 Groundwater Sampler

PRINTED COPIES ARE UNCONTROLLED. CONTROLLED COPY IS AVAILABLE ON COMPANY INTRANET.

Attachment 1

Soil Boring Log

ENSAFE

LOCATION OF BORING	JOB NO.	CLIENT	LOCATION

DRILLING METHOD:	BORING NO.
	SHEET OF
SAMPLING METHOD:	DRILLING
	START TIME / FINISH TIME
	DATE / DATE

WATER LEVEL				
TIME				
DATE				
CASING DEPTH				

DATUM ELEVATION

SAMPLER TYPE	INCHES DRIVEN / INCHES RECOVERED	DEPTH OF CASING	SAMPLE NO. / SAMPLE DEPTH	BLOWS/FT SAMPLER	VAPOR CONCENTRATIONS (PPM)	DEPTH IN FEET	SOIL GRAPH
						0	
						1	
						2	
						3	
						4	
						5	
						6	
						7	
						8	
						9	
						0	
						1	
						2	
						3	
						4	
						5	
						6	
						7	
						8	
						9	
						0	

SURFACE CONDITIONS

DRILLING CONTR. _____

BY _____ DATE _____ CHK'D BY _____

Attachment 2
Well Construction Form

Well Construction Form

Facility/Project Name:

Well ID.:

Facility License Number:

Type of Well:
Ground Water Monitoring ☐
Piezometer ☐ Injection ☐
Other_____

Date Well Installed:

Location of well relative to waste source:
Upgradient ☐ Downgradient ☐ Side-gradient ☐ Unknown ☐

Well Installed By:

Well Driller License Number:

Geologist:

A. Protective pipe: ft. above grade
B. Well casing, top elevation: ft. MSL
C. Land Surface Elevation: ft. MSL
D. Surface seal, bottom: ft.below grade

12. USCS classification of soil near screen:
GP☐ GM ☐ GC ☐ GW ☐ SP ☐ SM ☐
SC☐ SW☐ ML ☐ MH ☐ CL ☐ CH ☐
Bedrock ☐
13. Sieve analysis attached? Yes ☐ No ☐
14. Drilling method used: Rotary ☐ HSA ☐
Other:
15. Drilling fluid used:
Water☐ Air ☐ Drilling Mud ☐ None ☐
16. Drilling additives used? Yes ☐ No ☐
Specify:
17: Source of water:

E. Bentonite seal: top ft. (depth)
F. Fine sand: top ft. (depth)
G. Filter pack: top ft. (depth)
H. Screen joint top: ft. (depth)
I. Well bottom: f t. (depth)
J. Filter pack: bottom ft. (depth)
K. Borehole: bottom . ft.(depth)
Borehole diameter: in.

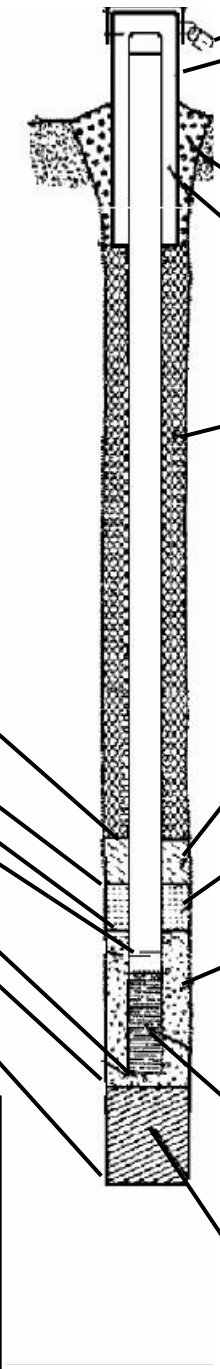

1. Cap and lock? ☐ Yes ☐ No
2. Protective cover pipe:
a. Inside diameter: in.
b. Length: ft.
c. Material: *Steel* ☐ *Other*
3. Surface seal: *Bentonite* ☐ *Concrete* ☐
Other:
4. Material blw. well casing and protective pipe:
Bentonite ☐ *Annular space seal* ☐
Other:
5. Annular space seal: *(Manufacturer name)*
a. Granular bentonite ☐
b. Bentonite/Cement slurry ☐
% bentonite ……. Bentonite/cement grout ☐
Lbs/gal mud weight … bentonite slurry ☐
c. How installed: *Tremie* ☐ *Tremie pumped* ☐
Gravity ☐
6. Bentonite seal: *(Manufacturer, product name)*
Bentonite granules ☐
☐ *¼ in.* ☐ *3/8 in.* ☐ *½ in.* *Bentonite pellets* ☐
Other:
7. Fine sand material: *(Manufacturer, product name, mesh size)*
Volume added: ft^3
8. Filter pack material: *(Manufacturer, product name, mesh size)*
Volume added: ft^3
9. Well casing: Flush-threaded Sch 40 PVC☐
Flush-threaded Sch 80 PVC☐
Other:
10. Screen material:
a. Screen type: factory cut ☐ continuous slot ☐
Other:
b. Manufacturer:
c. Slot size: 0. in.
d. Slotted length: ft.
11. Backfill material: *or* None ☐

CERTIFICATION:
I hereby certify that the information on this form is true and correct to the best of my knowledge:

_____
(Signature)

_____
(Company Name)

Attachment 3
Groundwater Sampling Form

ENSAFE

WELL DEVELOPMENT & GROUNDWATER SAMPLING FORM

DATE:	JOB NUMBER:	EQUIPMENT (Make/Model #/Serial #):
PROJECT:	EVENT:	/ /
WELL ID:	LOCATION:	/ /
WEATHER CONDITIONS:	AMBIENT TEMP:	/ /
REVIEWED BY:	PERSONNEL:	/ /

WELL DIA:	WELL DEVELOPMENT	
TOTAL DEPTH from TOC (ft.):	START:	FINISH:
DEPTH TO WATER from TOC (ft.):	VOLUME PURGED (gal):	
LENGTH OF WATER COL. (ft.):	GROUNDWATER SAMPLING	
1 VOLUME OF WATER (gal):	START:	FINISH:
3 VOLUMES OF WATER (gal):	VOLUME PURGED (gal):	
	ANALYSIS:	

WELL DEVELOPMENT PARAMETERS		GW SAMPLING PARAMETERS	
Temperature:	± 1.0° C	Temperature:	± 0.2° C
pH:	± 0.5 standard units	pH:	± 0.2 standard units
Specific Conductance:	± 10% of the past measurement	Specific Conductance:	± 5% of the past measurement
Turbidity:	relatively stable	DO:	≤ 20% saturation
		ORP:	± 10 millivolts
		Turbidity:	≤ 10 NTU

IN-SITU TESTING

Circle one: DEVELOPMENT SAMPLING ☐ Bailer ☐ Pump Description:

Time (hh:mm):												
pH (units):												
Conductivity (mS/cm):												
Turbidity (NTU):												
DO (mg/L): YSI 556												
DO (mg/L): YSI 550												
Temperature (C°):												
ORP (mV):												
Volume Purged (gal):												
Depth to Water (ft):												
								Well Goes Dry While Purging ☐				

SAMPLE DATA

☐ Bailer ☐ Pump Description:

Sample ID	Date (m/d/y)	Time (hh:mm)	Bottles (total to lab)	Filtered (0.45 μm)	Remarks

Purging/Sampling Device Decon Process:

COMMENTS:

Purge water placed in drum#_____

Attachment 4

Geoprobe Screen Point 22 Groundwater Sampler

GEOPROBE® SCREEN POINT 22 GROUNDWATER SAMPLER

STANDARD OPERATING PROCEDURE

Technical Bulletin No. MK3173

PREPARED: January 2011

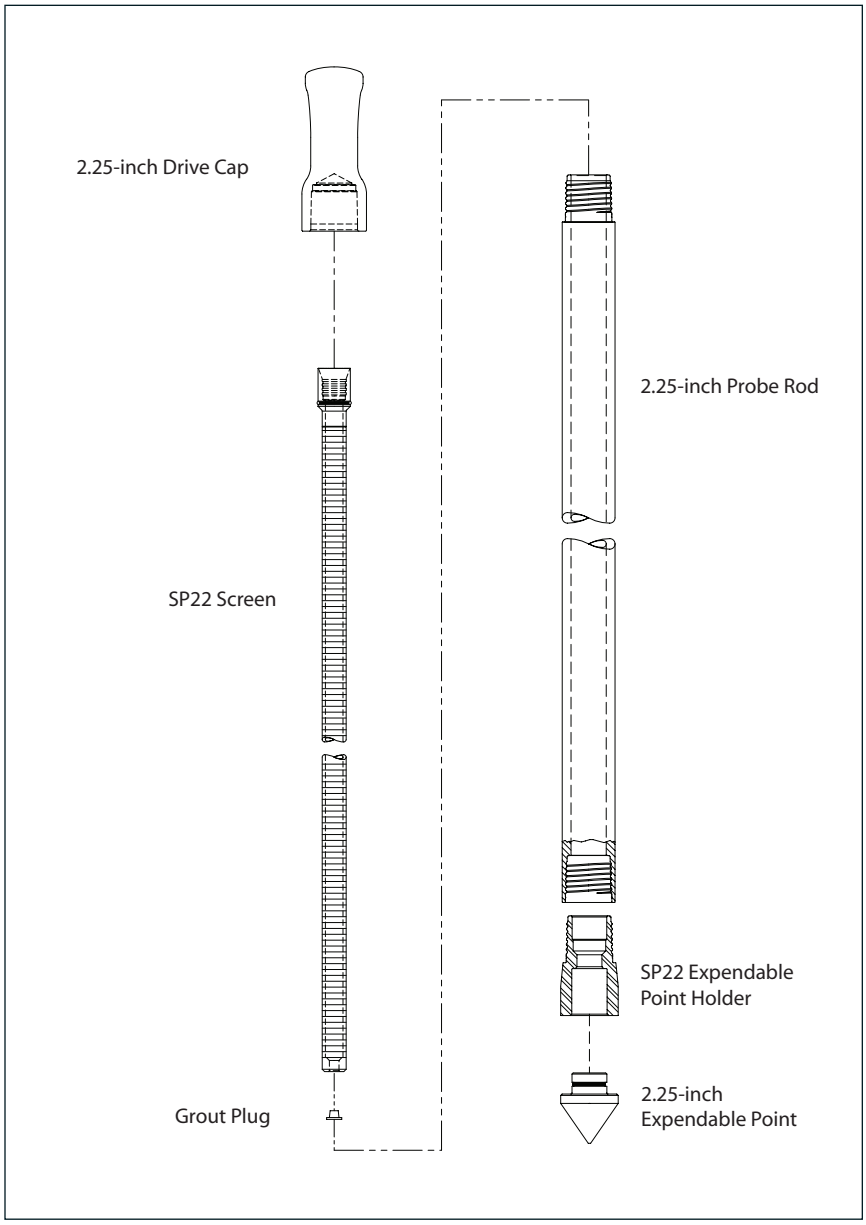

GEOPROBE® SCREEN POINT 22 GROUNDWATER SAMPLER PARTS

Geoprobe® and Geoprobe Systems®, Macro-Core® and Direct Image® are Registered Trademarks of Kejr, Inc., Salina, Kansas

COPYRIGHT© 2011 by Kejr, Inc.
ALL RIGHTS RESERVED.
No part of this publication may be reproduced or transmitted in any form or by any means, electronic or mechanical, including photocopy, recording, or any information storage and retrieval system, without permission in writing from Kejr, Inc.

1.0 OBJECTIVE

The objective of this procedure is to deploy a sealed stainless steel or PVC screen to depth, obtain a representative water sample from the screen interval, and grout the probe hole during abandonment. The Screen Point 22 Groundwater Sampler enables the operator to conduct abandonment grouting that meets American Society for Testing and Materials (ASTM) Method D 5299 requirements for decommissioning wells and borings for environmental activities (ASTM 1993).

2.0 BACKGROUND

2.1 Definitions

Geoprobe®: A brand name of high quality, hydraulically powered machines that utilize both static force and percussion to advance sampling and logging tools into the subsurface. The Geoprobe® brand name refers to both machines and tools manufactured by Geoprobe Systems®, Salina, Kansas. Geoprobe® tools are used to perform soil core and soil gas sampling, groundwater sampling and monitoring, soil conductivity and contaminant logging, grouting, and materials injection.

Screen Point 22 (SP22) Groundwater Sampler: A direct push device consisting of a PVC or stainless steel screen that is lowered (post-run) to depth within a sealed, steel probe rod and then deployed for the collection of representative groundwater samples. The assembled SP22 Sampler is approximately 44 inches (1118 mm) long with an OD of 1 inch (25 mm). Upon deployment, up to 41 inches (1041 mm) of screen can be exposed to the formation. There is also an optional 12-inch screen that can be used. The Screen Point 22 Groundwater Sampler is designed for use with 2.25-inch probe rods and machines equipped with the more powerful GH60 series and GH80 series Hydraulic Hammers. Operators with GH40 Series hammers may choose to use this sampler in soils where driving is easier.

Rod Grip Pull System: An attachment mounted on the hydraulic hammer of a direct push machine which makes it possible to retract the tool string with probe rods or flexible tubing protruding from the top of the probe rods. The Rod Grip Pull System includes a pull block with rod grip jaws that are bolted directly to the machine. A removable handle assembly straddles the tool string while hooking onto the pull block to effectively grip the probe rods as the hammer is raised. A separate handle assembly is required for each probe rod diameter.

2.2 Discussion (Fig. 2.1)

In this procedure, the tool string is advanced into the subsurface with a Geoprobe® direct push machine. While the tool string is advanced to depth, O-ring seals at each rod joint, the SP22 Expendable Point Holder, and the expendable drive point provide a watertight system. This system eliminates the threat of formation fluids entering the screen before deployment and assures sample integrity. (Fig. 2.1, step 1)

Once at the desired sampling interval, the SP22 sampler is attached to 1.25-inch probe rods and sent downhole until the sampler (SP22 Screen) extends through the lead 2.25-inch probe rod, contacting the expendable point. (Fig. 2.1, step 2) The tool string is then retracted approximately 41 inches (1041 mm) while the screen is held in place with the 1.25-inch probe rods. As the tool string is retracted, the expendable point is released from the SP22 Expendable Point Holder. The tool string and SP22 Expendable Point Holder may be retracted the full length of the screen or as little as a few inches if a small sampling interval is desired. (Fig 2.1, step 3)

There are two types of screens that can be used in the Screen Point 22 Groundwater Sampler. A stainless steel screen with a standard slot size of 0.004 inches (0.10 mm) and a PVC screen with a standard slot size of 0.010 inches (0.25 mm), are recovered with the tool string after sampling.

(continued on following page)

An O-ring on the head of the stainless steel screens maintains a seal at the top of the screen. As a result, any liquid entering the SP22 Expendable Point Holder during screen deployment must first pass through the screen. PVC screens do not have an O-ring, but require a PVC adapter head (page 7) which does contain an O-ring.

The screens are constructed such that flexible tubing, the SP22 Check Valve Assembly (37893), a mini-bailer, or a small-diameter bladder pump can be inserted into the screen cavity. (Fig 2.1, step 4) This makes direct sampling possible from anywhere within the saturated zone. A removable plug in the lower end of the screens allows the user to grout as the SP22 Expendable Point Holder is extracted for further use. However, an easier method is to remove the inner string of rods and the SP22 screen, and grout through the 2.25-inch probe rods. (Fig 2.1, step 5 - 6)

The SP22 Sampler can also be used with the Geoprobe® DT22 system. (Fig. 2.2)

Groundwater samples can be obtained in a number of ways. A common method utilizes polyethylene (TB25L) or Teflon® (TB25T) tubing and a Check Valve Assembly (37893). The check valve (with check ball) is attached to one end of the tubing and inserted down the casing until it is immersed in groundwater. Water is pumped through the tubing and to the ground surface by oscillating the tubing up and down.

An alternative means of collecting groundwater samples is to attach a peristaltic or vacuum pump to the tubing. This method is limited in that water can be pumped to the surface from a maximum depth of approximately 26 feet (8 m). Another technique for groundwater sampling is to use a stainless steel Mini-Bailer Assembly (GW41). The mini-bailer is lowered down the inside of the casing below the water level where it fills with water and is then retrieved from the casing.

The latest option for collecting groundwater from the SP22 Sampler is to utilize a Geoprobe® MB470 Series Mechanical Bladder Pump (MBP)*. The MBP may be used to meet requirements of the low-flow sampling protocol (Puls and Barcelona 1996, ASTM 2003). Through participation in a U.S. EPA Environmental Technology Verification study, it was confirmed that the MB470 can provide representative samples (EPA 2003).

**The Mechanical Bladder Pump is manufactured under U.S. Patent No. 6,877,965 issued April 12, 2005.*

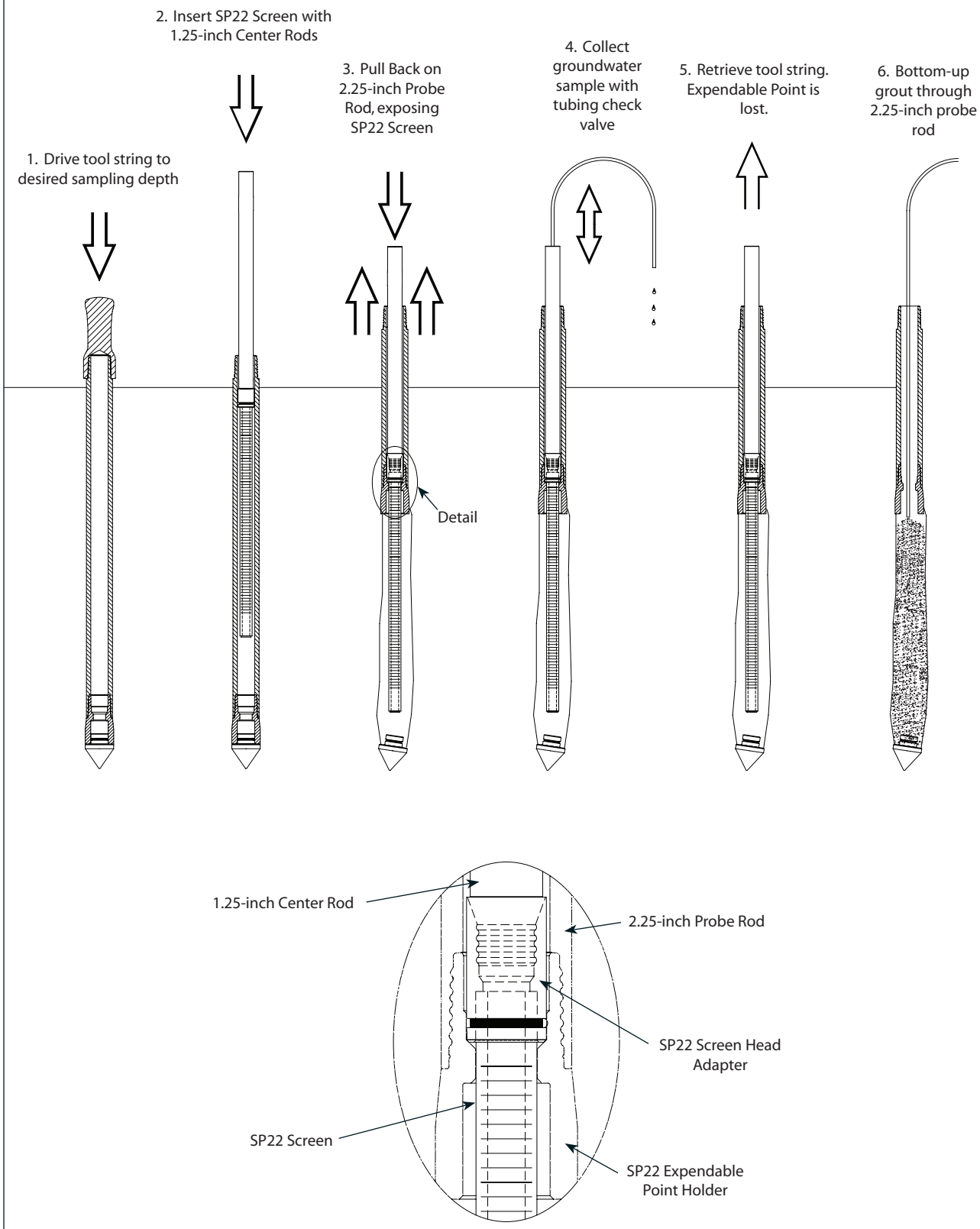

FIGURE 2.1
Screen Point 22 Groundwater Sampler

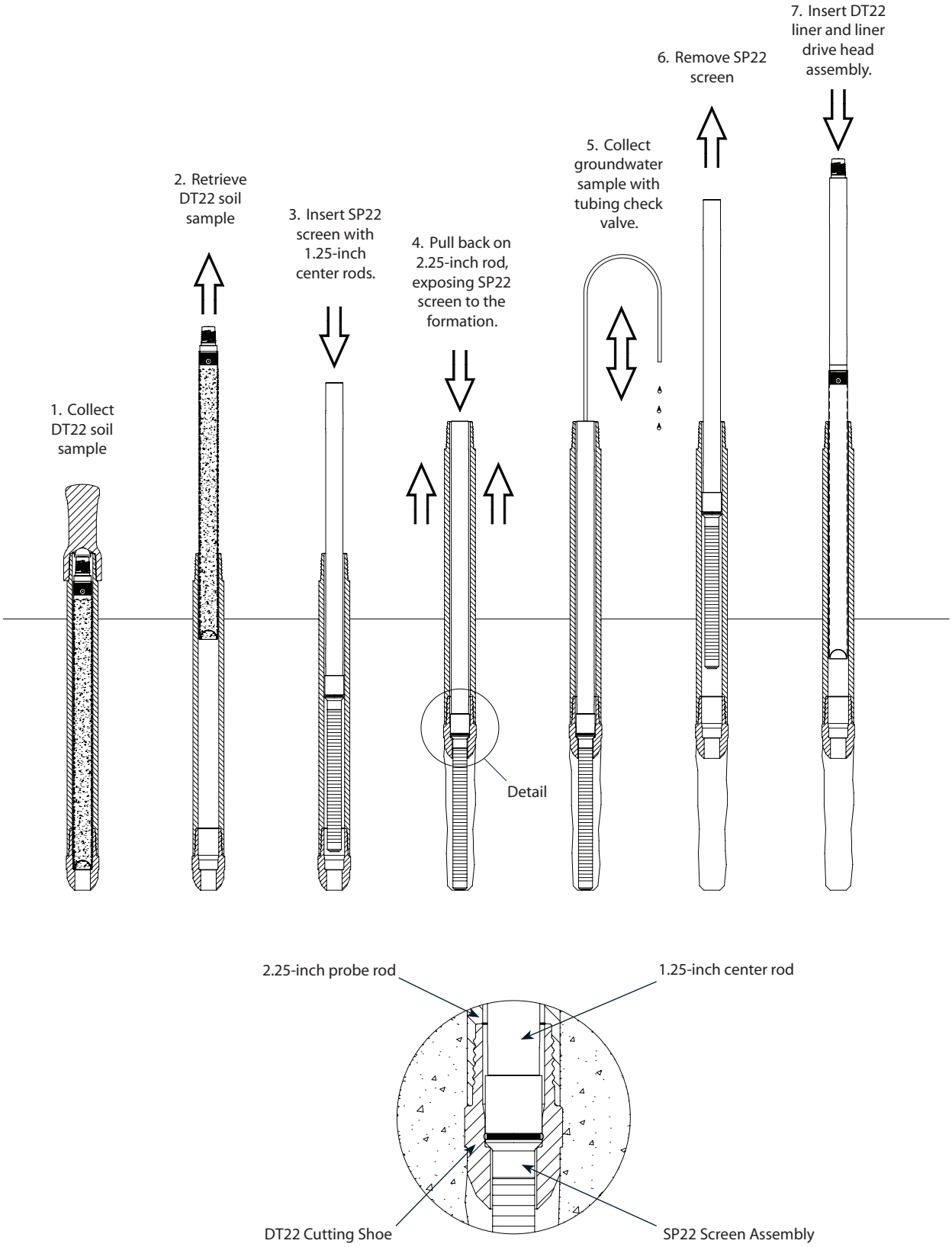

FIGURE 2.2
Screen Point 22 Groundwater Sampler Operation with DT22 Sampling System

3.0 TOOLS AND EQUIPMENT

The following tools and equipment can be used to successfully recover representative groundwater samples with the Geoprobe® Screen Point 22 Groundwater Sampler. Refer to Figures 3.1 and 3.2 for identification of the specified parts. Tools are listed below for the most common SP22 / 2.25-inch probe rod configurations. Additional parts for optional rod sizes and accessories are listed in Appendix A.

SP22 Sampler Parts	**Part Number**
SP22 PVC Screen Adapter	37865
SP22 PVC Screen Adapter	37871
SP22 PVC Screen Head	37870
SP22 Screen, Wire-Wound Stainless Steel, 4-Slot* (48-inch)	37894
SP22 Screen, Wire-Wound Stainless Steel, 4-Slot* (12-inch)	38247
SP22 Screen, PVC, .75-inch x 48-inch	38664
SP22 Screen, PVC, .75-inch x 12-inch	38667
Grout Plugs, PE (Pkg. of 25)	GW1552K
SP22 Screen Plug	38429
Expendable Drive Points, steel, 1.625-inch OD (Pkg. of 25)*	AT2015K
Expendable Drive Points, steel, extended shank	19442
SP22 Expendable Point Holder	33764

Probe Rods and Probe Rod Accessories	**Part Number**
Drive Cap, 2.25-inch probe rods, threadless, (for GH60 and GH80 Series Hammers)*	31530
Rod Grip Handle, 2.25-inch probe rods, (for GH60 and GH80 Series Hammers)*	29385
Pull Cap, 2.25-inch probe rods	33622
Probe Rod, 2.25-inch x 60-inch*	25301
Probe Rod, 2.25-inch x 48-inch	25300

Grout Accessories	**Part Number**
High-Pressure Nylon Tubing, 0.375-inch OD / 0.25-inch ID, 100-ft. (30 m)	11633
Grout Machine, auxiliary-powered*	GS2200
Grout System Accessories Package, 2.25-inch rods	GS1015

Groundwater Purging and Sampling Accessories	**Part Number**
Polyethylene Tubing, 0.375-inch OD, 500 ft.*	TB25L
Check Valve Assembly, 0.375-inch OD Tubing*	37893
Water Level Meter, 0.438-inch OD Probe, 100 ft. cable*	GW2000
Mechanical Bladder Pump**	MB470
Mini Bailer Assembly, stainless steel	GW41

* See Appendix A for additional tooling options.

** Refer to the Standard Operating Procedure (SOP) for the Mechanical Bladder Pump (Technical Bulletin No. MK3013) for additional tooling needs.

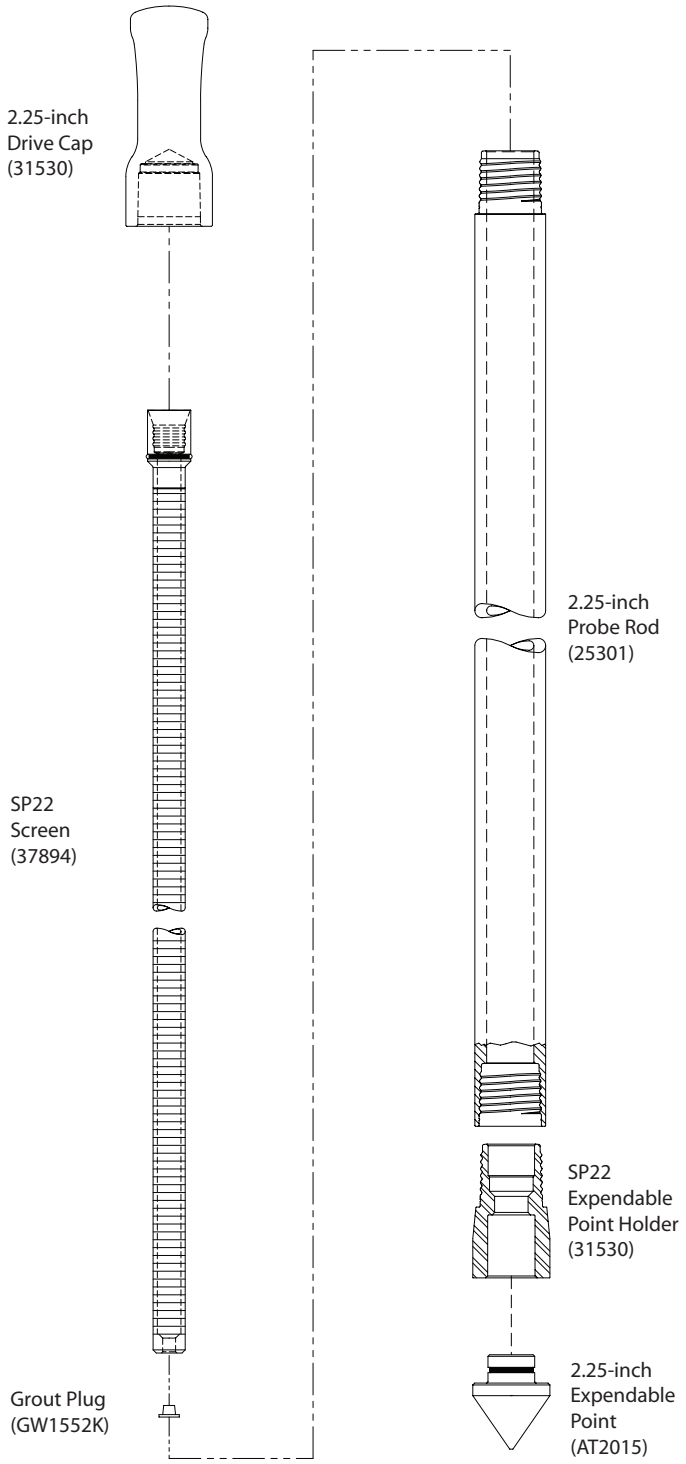

FIGURE 3.1
SP22 Sampler Parts

4.0 OPERATION

4.1 Basic Operation

The SP22 Sampler utilize a stainless steel or PVC screen which is lowered (post-run) in an alloy steel probe rod tool string. An expendable drive point is placed in the SP22 Expendable Point Holder. O-rings on the probe rods , the expendable point holder, and on an expendable point provide a watertight tool string which keeps contaminants out of the system as the sampler is driven to depth.

Once the sampling interval is reached, 1.25-inch probe rods (or 1.25-inch LWCR) rods are inserted down the ID of the 2.25-inch probe rods. The tool string is then retracted up to 41 inches (1041 mm) while the screen is held in place with the 1.25-inch probe rods (or 1.25-inch LWCR) rods. The system is now ready for groundwater sampling. When sampling is complete, a removable plug in the bottom of the screen allows for grouting below the sampler as the tool string is retrieved.

4.2 Decontamination

In order to collect representative groundwater samples, all sampler parts must be thoroughly cleaned before and after each use. Scrub all metal parts using a stiff brush and a nonphosphate soap solution. Steam cleaning may be substituted for hand-washing if available. Rinse with distilled water and allow to air-dry before assembly.

4.3 Lead Rod Assembly (Fig. 4.1)

1. Place an O-ring on the SP22 Expendable Point Holder (33764).
2. Thread SP22 Expendable Point Holder into the 2.25-inch probe rod.
3. Place an O-ring on a steel expendable drive point (AT2015K).
4. Firmly seat the expendable point in the SP22 Expendable Point Holder.
5. Place 2.25-inch Drive Cap (31530) on the top of the 2.25-inch probe rod. The lead rod assembly is now ready to be driven to depth.

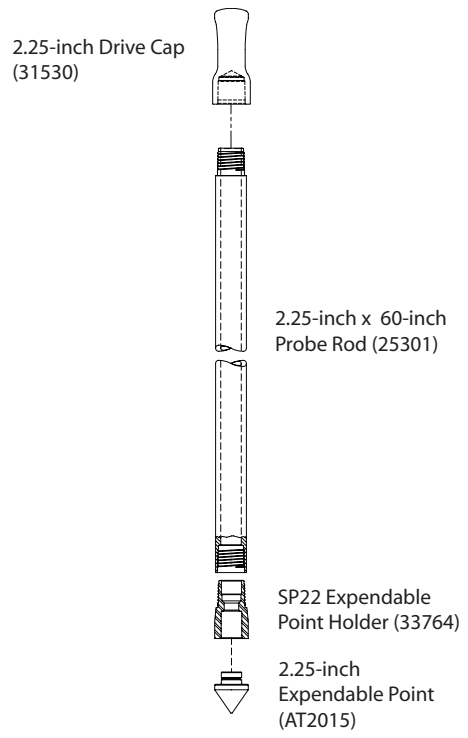

FIGURE 4.1
Lead Rod Assembly for use with the SP22 Groundwater Sampler

4.4 Advancing the Tool String (Fig. 4.2, step 1)

To provide adequate room for screen deployment with the Rod Grip Pull System, the probe derrick should be extended a little over halfway out of the carrier vehicle when positioning for operation.

1. Drive first 2.25-inch probe rod (as assembled in section 4.3).

2. Advance the tool string at a slow speed for the first few feet to ensure that the string is aligned properly.

3. Completely raise the hammer assembly. Remove the drive cap and place an O-ring in the top groove of the driven probe rod. Distilled water may be used to lubricate the O-ring if needed.

   Add a probe rod (length to be determined by operator) and reattach the drive cap to the rod string. Drive the tool string the entire length of the new rod.

4. Repeat Step 3 until the desired sampling interval is reached. Approximately 12 inches (305 mm) of the last probe rod must extend above the ground surface to allow attachment of the puller assembly. A 12-inch (305 mm) rod may be added if the tool string is over-driven.

5. Remove the drive cap and retract the probe derrick away from the tool string.

4.5 Screen Deployment (Fig 4.2, step 2 - 4)

1. Thread a SP22 Stainless Steel Screen on a Lightweight Center Rod (LWCR), or 1.25-inch probe rod, and lower it into the driven casing.

2. Add LWCR's, or 1.25-inch probe rods, until the screen head contacts the bottom of the tool string.

3. Ensure that at least 48 inches (1219 mm) of 1.25-inch probe rods or LWCR's protrudes from the top 2.25-inch probe rod.

4. Maneuver the probe assembly into position for pulling.

5. Raise (pull) the tool string while physically holding the screen in place with the 1.25-inch probe rods or LWCR's . A slight knock with the 1.25-inch probe rods (or 1.25-inch LWCR's) string will help to dislodge the expendable point and start the screen moving inside the probe rod.

   Raise the hammer and tool string about 41 inches (1041 mm) if using a 38664 or 37984 screen. At this point the screen head will contact the necked portion of the expendable point holder, or DT22 Cutting Shoe and the 1.25-inch probe rods (or 1.25-inch LWCR) rods will rise with the probe rods. Use care when deploying a PVC screen so as not to break the screen when it contacts the expendable point.

6. Remove the rod grip handle, lower the hammer assembly, and retract the probe derrick. Remove the top 2.25-inch probe rod.

7. Groundwater samples can now be collected with a mini-bailer, peristaltic or vacuum pump, tubing bottom check valve assembly, bladder pump, or other acceptable small diameter sampling device.

   When inserting tubing or a bladder pump down the rod string, ensure that it enters the screen interval. The leading end of the tubing or bladder pump will sometimes catch at the screen head giving the illusion that the bottom of the screen has been reached. An up-and-down motion combined with rotation helps move the tubing or bladder pump past the lip and into the screen.

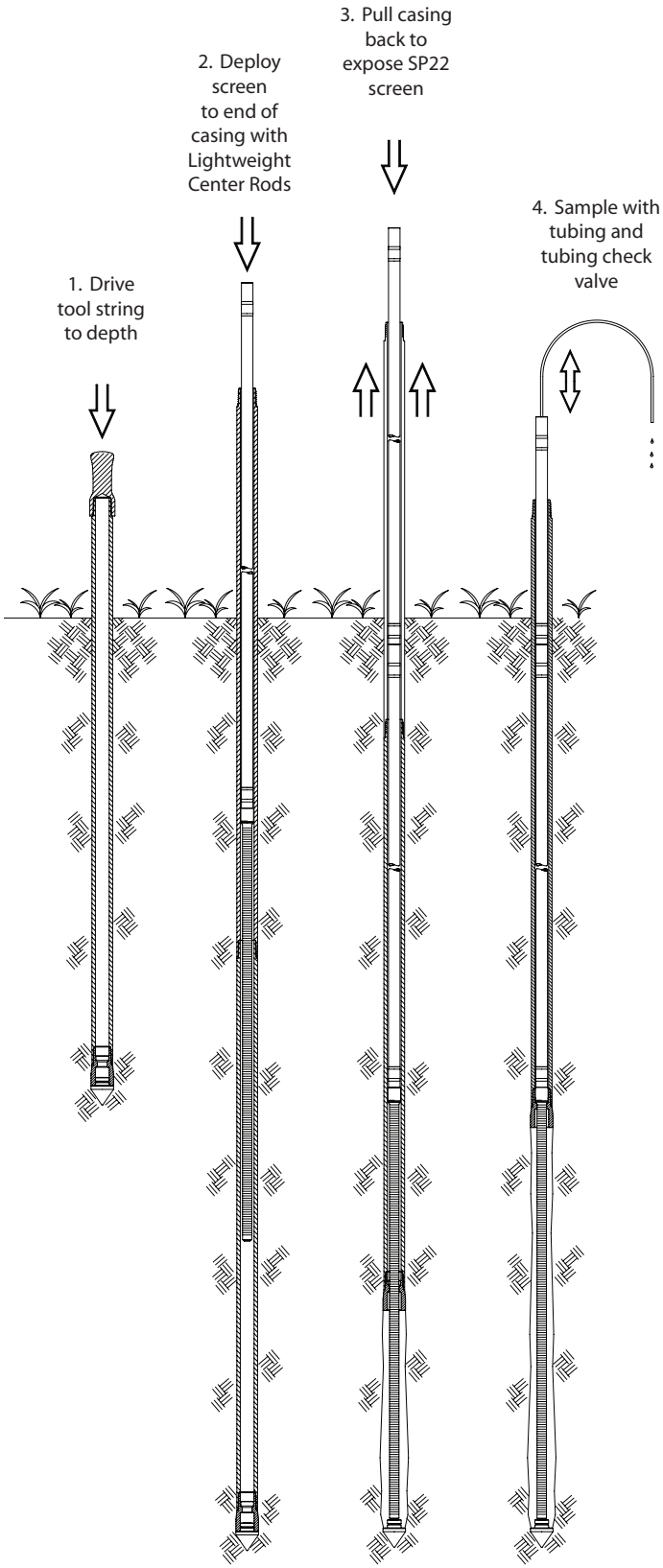

FIGURE 4.2
Screen Deployment for SP22 Sampler

4.6 Abandonment Grouting for SP22 Screens

The SP22 Sampler can meet ASTM D 5299 requirements for abandoning environmental wells or borings when grouting is conducted properly. A removable grout plug makes it possible to deploy tubing through the bottom of the SP22 screens, but the easiest method is to remove the inner string of rods; including the SP22 screen. A Grout Machine is then used to pump grout into the open probe hole as the outer casing is withdrawn. The following procedure is presented as an example only and should be modified to satisfy local abandonment grouting regulations. (Figure 4.3)

1. Maneuver the probe assembly into position for pulling.

2. High-Pressure Nylon Tubing (11633) is inserted down through the probe rods through the bottom of the SP22 expendable point holder (Fig. 4.3).

   Note: *All probe rods remain strung on the tubing as the tool string is pulled. Provide extra tubing length to allow sufficient room to lay the rods on the ground as they are removed. An additional 20 feet is generally enough.*

3. Operate the grout pump while pulling the first rod with the rod grip pull system. Coordinate pumping and pulling rates so that grout fills the void left by the sampler. After pulling the first rod, release the rod grip handle, fully lower the hammer, and regrip the tool string. Unthread the top probe and slide it over the tubing placing it on the ground near the end of the tubing.

4. Repeat Step 5 until the tool string is retrieved. Do not bend or kink the tubing when pulling and laying out the probe rods. Sharp bends create weak spots in the tubing which may burst when pumping grout. Remember to operate the grout pump only when pulling the rod string. The probe hole is thus filled with grout from the bottom up as the rods are extracted.

5. Promptly clean all probe rods and sampler parts before the grout sets up and clogs the equipment.

4.7 Retrieving the Screen Point 22 Sampler

If grouting is not required, the Screen Point 22 Sampler can be retrieved by pulling the probe rods as with most other Geoprobe® applications. The Rod Grip Pull System should be used for this process as it allows the operator to remove rods without completely releasing the tool string. This avoids having the probe rods fall back downhole when released during the pulling procedure. A standard Pull Cap (33622) may still be used if preferred. Refer to the Owner's Manual for your Geoprobe® direct push machine for specific instructions on pulling the tool string.

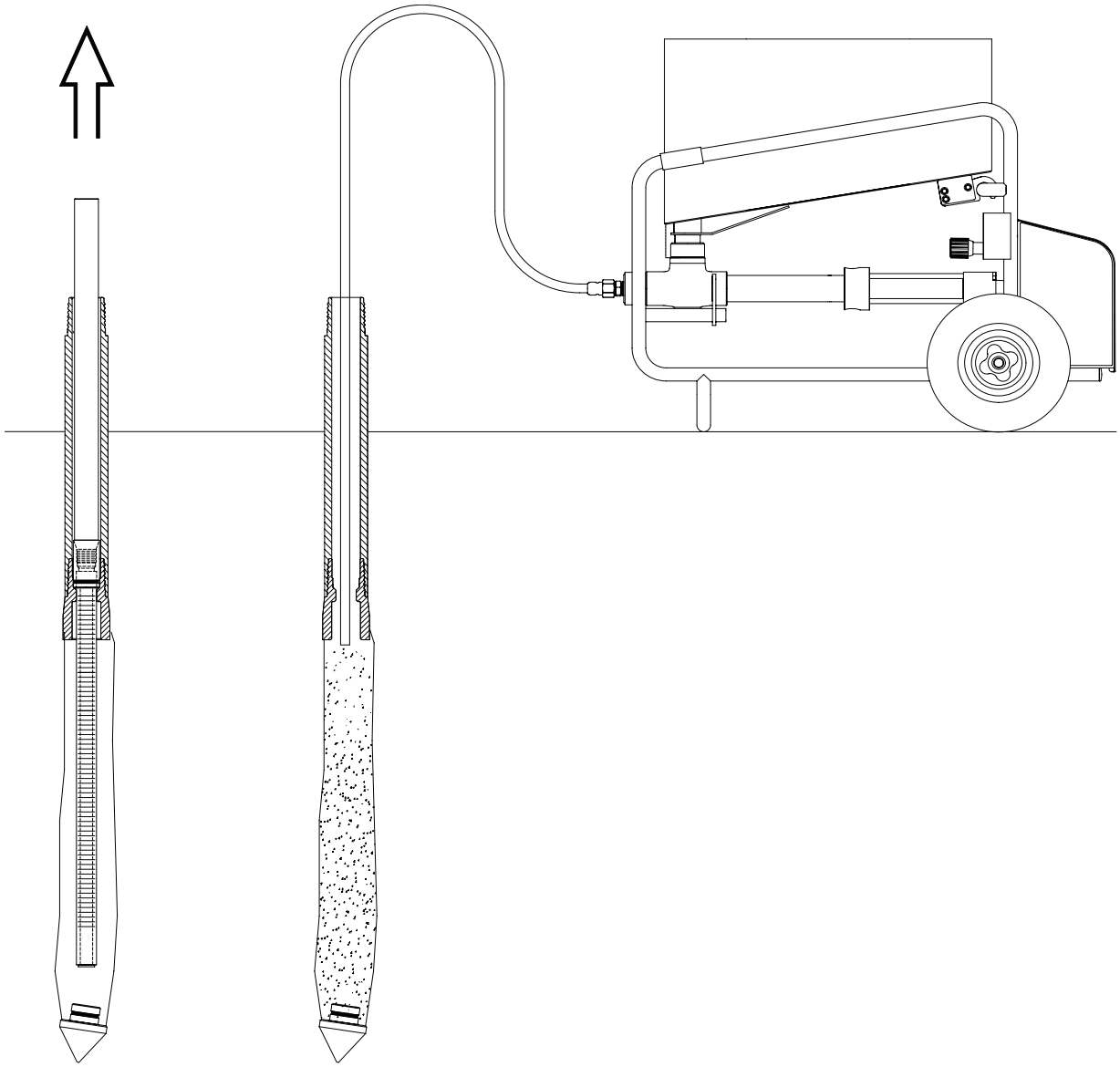

FIGURE 4.3
Abandonment Grouting for the SP22 Sampler

5.0 REFERENCES

American Society of Testing and Materials (ASTM), 2003. D6771-02 Standard Practice for Low-Flow Purging and Sampling for Wells and Devices Used for Ground-Water Quality Investigations. ASTM, West Conshocken, PA. (www.astm.org)

American Society of Testing and Materials (ASTM), 1993. ASTM 5299 *Standard Guide for Decommissioning of Groundwater Wells, Vadose Zone Monitoring Devices, Boreholes, and Other Devices for Environmental Activities.* ASTM West Conshohocken, PA. (www.astm.org)

Geoprobe Systems®, 2003, *Tools Catalog, V.6.*

Geoprobe Systems®, 2006, *Model MB470 Mechanical Bladder Pump Standard Operating Procedure (SOP), Technical Bulletin No. MK3013.*

Puls, Robert W., and Michael J. Barcelona, 1996. Ground Water Issue: Low-Flow (Minimal Drawdown) Ground Water Sampling Procedures. EPA/540/S-95/504. April.

U.S. Environmental Protection Agency (EPA), 2003. Environmental Technology Verification Report: Geoprobe Inc., Mechanical Bladder Pump Model MB470. Office of Research and Development, Washington, D.C. EPA/600R-03/086. August.

Appendix A
ALTERNATIVE PARTS

The following parts are available to meet unique soil conditions. See section 3.0 for a complete listing of the common tool configurations for the Geoprobe® Screen Point 22 Groundwater Sampler.

Groundwater Purging and Sampling Accessories	**Part Number**
Polyethylene Tubing, 0.25-inch OD, 500 ft.	TB17L
Polyethylene Tubing, 0.5-inch OD, 500 ft.	TB37L
Polyethylene Tubing, 0.625-inch OD, 50 ft.	TB50L
Check Valve Assembly, 0.25-inch OD Tubing	GW4240
Check Valve Assembly, 0.5-inch OD Tubing	GW4220
Check Valve Assembly, 0.625-inch OD Tubing	GW4230
Water Level Meter, 0.375-inch OD Probe, 100-ft. cable	GW2001
Water Level Meter, 0.438-inch OD Probe, 200-ft. cable	GW2002
Water Level Meter, 0.375-inch OD Probe, 200-ft. cable	GW2003
Water Level Meter, 0.438-inch OD Probe, 30-m cable	GW2005
Water Level Meter, 0.438-inch OD Probe, 60-m cable	GW2007
Water Level Meter, 0.375-inch OD Probe, 60-m cable	GW2008

Grouting Accessories	**Part Number**
Grout Nozzle, for 0.375-inch OD tubing	GW1545
Grout Machine, self-contained*	GS1000

Extension Rods and Extension Rod Accessories	**Part Number**
Screen Push Adapter	GW1535
Grout Plug Push Adapter	GW1540
Extension Rod, 60-inch*	10073
Extension Rod Coupler	AT68
Extension Rod Handle	AT69
Extension Rod Jig	AT690
Extension Rod Quick Link Coupler, pin	AT695
Extension Rod Quick Link Coupler, box	AT696

Probe Rods, Extension Rods, and Accessories	**Part Number**
Probe Rod, 2.25-inch x 1-meter	25352
Drive Cap, 2.25-inch rods (for GH40 Series Hammer)	31405
Rod Grip Pull Handle, 2.25-inch Probe Rods (for GH40 Series Hammer)	29461
Extension Rod, 48-inch	AT671
Extension Rod, 1-meter	AT675

Additional Tools	**Part Number**
Adjustable Wrench, 6.0-inch	FA200
Adjustable Wrench, 10.0-inch	FA201
Pipe Wrenches	NA

Equipment and tool specifications, including weights, dimensions, materials, and operating specifications included in this brochure are subject to change without notice. Where specifications are critical to your application, please consult Geoprobe Systems®.

Geoprobe Systems®

A DIVISION OF KEJR, INC.

Corporate Headquarters
1835 Wall Street • Salina, Kansas 67401
1-800-GEOPROBE (1-800-436-7762) • Fax (785) 825-2097
www.geoprobe.com

Standard Operating Procedure SOP-MS Access
NSA Mid-South Installation Access

1.0 PURPOSE

This standard operating procedure (SOP) describes the process for acquiring access to the Southside of the Naval Support Activity (NSA) Mid-South installation. The primary purpose of the procedure is to familiarize Resolution Consultants and subcontract personnel with the security procedures that are necessary to gain access to the NSA Mid-South installation.

2.0 SCOPE

This procedure shall serve as a Contract Task Order (CTO) Manager-approved guidance and is consistent with protocol in the Uniform Federal Policy-Quality Assurance Project Plan (DoD 2005). No deviations from this procedure will be accepted without the approval CTO Manager as directed by NSA Mid-South personnel.

3.0 DEFINITIONS

None.

4.0 RESPONSIBILITIES

The CTO Manager and subcontractor personnel manager are responsible for verifying that these procedures are performed prior to arrival at the NSA Mid-South installation.

Field personnel are responsible for the implementation of this procedure.

5.0 PROCEDURE

The following procedures must be carefully reviewed and adhered to in order to gain access to the NSA Mid-South installation.

5.1 *RAPID*Gate Credential Procedure

Long-term access (> 4 weeks) will require personnel to acquire a *RAPID*Gate Credential. The *RAPID*Gate Credential enables full access to the installation and avoids the delay associated with "visitor passes" obtained from Security. It also enables the contractor to work at other Activities/Installations given appropriate authorization. Approximately 4 weeks are required to obtain a *RAPID*Gate credential; therefore appropriate planning should be made in advance of work.

To obtain a *RAPID*Gate Credential, personnel should go to the Pat Thompson Conference Center 5700 Attu Street, Millington, TN 38054 and fill out the requested information in the *RAPID*Gate Kiosk. The enrollment process requires that the applicant provide the company code, which can be obtained from the Resolution Consultants' human resource managers or the CTO Manager.

Subcontract personnel will be responsible for obtaining their own company code and Credential from *RAPIDGate.*

Personnel will receive notification when the *RAPID*Gate Credential is ready and will obtain the badge by going to the Base Security Pass and ID office at the Navy Road gate. It is advised that personnel pick up and activate their *RAPID*Gate Credential within **2 weeks** of receiving the notice that it is ready. There will be a $30 fee for any Credential that needs to be reordered.

Two important notes:

1. Personnel will be required to show identification at the time of Credential pickup. The employee can show one form of identification from List A, or two forms of identification from List B, in Table 1 when picking up their *RAPID*Gate Credential.

2. Credential activation will require both the Credential ID (located on the back of the *RAPID*Gate Credential) and the last four digits of their Social Security Number to activate their credential through an automated phone activation system. Typically, a minimum of 24 hours are required for the badge to be activated; therefore, the soonest access can be granted is the day after badge pickup.

Table 1 **Required Forms of Identification**
List A – One Needed
• U.S. Passport (unexpired) • Permanent Resident Card or Alien Registration Receipt Card (Form I-551) • Passport (foreign unexpired), with I-551 stamp or attached Form I-94 indicating unexpired employment authorization • Employment Authorization Document that contains a photograph (Form I-766, I-688, I688A, I-688B) (Unexpired)
List B – Two Needed
• Driver's license or ID card issued by a state • ID Card issued by federal, state or local government agencies or entities • Birth certificate (Original or certified copy) issued by a state, county, municipal authority or outlying possession of the United States bearing an official seal • Certification of Birth Abroad issued by the Department of State (Form FS-545 or Form DS-1350) • U.S. Military card or draft record • Military Dependent's ID card • U.S. Coast Guard Merchant Mariner Card • Native American tribal document • Driver's license issued by a Canadian government authority • U.S. Social Security card issued by the Social Security Administration • School ID card with a photograph • Voter's registration card • U.S. Citizen ID Card (Form I-197) • ID Card for use of Resident Citizen in the United States (Form I-179) • Employment authorization document issued by DHS (other than those listed under List A) (Unexpired)

PRINTED COPIES ARE UNCONTROLLED. CONTROLLED COPY IS AVAILABLE ON COMPANY INTRANET.

Once a *RAPID*Gate Credential is issued, personnel will be required to present their Credential to gain entry to Naval Support Activity Mid-South and must wear and display the Credential at all times while on the premises. Questions about the Naval Support Activity Mid-South *RAPID*Gate Program should be addressed info@rapidgate.com with the subject line re: *RAPID*Gate Program.

5.2 Short Term Installation Access Procedure (Visitor's Pass)

The following procedures should be used when long-term site access is not needed:

1. Personnel must prepare an employment eligibility form (Form I-9, Attachment 1) and a Base Access Application (Form 5530, Attachment 2).

2. The 5530 Form must be completed electronically in Microsoft Word format 2 weeks prior to arriving at the installation. This form must be submitted to the Resolution Consultants CTO Manager for routing to the Navy.

3. Current I-9 Forms are required to obtain a visitor pass and personnel will be required to provide acceptable documents to confirm their identity, as shown on Table 1, to the security officer.

4. It is important that the forms of identification listed on the I-9 and 5530 forms match what is brought to the installation. If there has been a name change or a driver's license has been acquired in a new state, NSA Mid-South security officers may not permit access because they cannot guarantee that they did the background check on the right person and that they have all the relevant information.

5. It is highly recommended that personnel refrain from obtaining a new driver's license after submitting the 5530 form and going to the NSA –MidSouth installation.

6. Personnel must ensure that the name listed on the I-9 and 5530 forms are spelled exactly the same as the identifications provided in Table 1. The I-9 and 5530 forms are considered official documents and should be completed carefully.

7. Personnel must bring the identification(s) listed on the I-9 form with them to the installation. Copies, facsimiles, PDFs, etc., of identification documents are not considered satisfactory by Base security.

PRINTED COPIES ARE UNCONTROLLED. CONTROLLED COPY IS AVAILABLE ON COMPANY INTRANET.

5.3 Vehicle Passes

Each vehicle must have appropriate registration and insurance records to enter the installation and vehicle passes can be issued for a 1-year maximum period. In addition, all drivers must have a proper unexpired driver's license. Vehicle passes may be obtained at the Base Security office. Once obtained, the vehicle pass must be prominently displayed on the dashboard of the registered vehicle. For the extent of the installation visit, all names of drivers for that vehicle must be on the pass and Base Security may compare drivers listed on the vehicle pass to personnel identification for confirmation. If personnel listed on the vehicle pass do not match the driver's identification, Base Security may not grant access to the installation.

6.0 RECORDS

Personnel who do not have a *RAPID*Gate Credential are required to prepare the I-9 and 5530 forms as described in this procedure. All personnel are required to have proper identification (e.g., driver's license) that matches their *RAPID*Gate Credential or I-9 and 5530 forms with them at all times. All vehicle passes are to be placed on the dashboard for the extent of the base visit and placed in a secure location when off-base.

7.0 HEALTH AND SAFETY

None.

8.0 REFERENCES

Department of Defense, United States (DoD). 2005. *Uniform Federal Policy for Quality Assurance Project Plans, Part 1: UFP-QAPP Manual*. Final Version 1. DoD: DTIC ADA 427785, EPA-505-B-04-900A. In conjunction with the U. S. Environmental Protection Agency and the Department of Energy. Washington: Intergovernmental Data Quality Task Force. March. On-line updates available at: http://www.epa.gov/fedfac/pdf/ufp_qapp_v1_0305.pdf.

*RAPID*Gate Enrollment Information: https://eform.rapidgate.com/Default.aspx

United States Citizenship and Immigration Services I-9, Employment Eligibility Verification: http://www.uscis.gov/i-9

9.0 ATTACHMENTS

Attachment 1: Employment Eligibility Verification form (I-9 Form)
Attachment 2: Base Access Application (Form 5530)

Attachment 1

Employment Eligibility Verification form (I-9 Form)

Note: The attached file is a copy.

Please obtain form from http://www.uscis.gov/i-9

Instructions for Employment Eligibility Verification

Department of Homeland Security
U.S. Citizenship and Immigration Services

USCIS
Form I-9
OMB No. 1615-0047
Expires 03/31/2016

Read all instructions carefully before completing this form.

Anti-Discrimination Notice. It is illegal to discriminate against any work-authorized individual in hiring, discharge, recruitment or referral for a fee, or in the employment eligibility verification (Form I-9 and E-Verify) process based on that individual's citizenship status, immigration status or national origin. Employers **CANNOT** specify which document(s) they will accept from an employee. The refusal to hire an individual because the documentation presented has a future expiration date may also constitute illegal discrimination. For more information, call the Office of Special Counsel for Immigration-Related Unfair Employment Practices (OSC) at 1-800-255-7688 (employees), 1-800-255-8155 (employers), or 1-800-237-2515 (TDD), or visit www.justice.gov/crt/about/osc.

What Is the Purpose of This Form?

Employers must complete Form I-9 to document verification of the identity and employment authorization of each new employee (both citizen and noncitizen) hired after November 6, 1986, to work in the United States. In the Commonwealth of the Northern Mariana Islands (CNMI), employers must complete Form I-9 to document verification of the identity and employment authorization of each new employee (both citizen and noncitizen) hired after November 27, 2011. Employers should have used Form I-9 CNMI between November 28, 2009 and November 27, 2011.

General Instructions

Employers are responsible for completing and retaining Form I-9. For the purpose of completing this form, the term "employer" means all employers, including those recruiters and referrers for a fee who are agricultural associations, agricultural employers, or farm labor contractors.

Form I-9 is made up of three sections. Employers may be fined if the form is not complete. Employers are responsible for retaining completed forms. Do not mail completed forms to U.S. Citizenship and Immigration Services (USCIS) or Immigration and Customs Enforcement (ICE).

Section 1. Employee Information and Attestation

Newly hired employees must complete and sign Section 1 of Form I-9 **no later than the first day of employment**. Section 1 should never be completed before the employee has accepted a job offer.

Provide the following information to complete Section 1:

Name: Provide your full legal last name, first name, and middle initial. Your last name is your family name or surname. If you have two last names or a hyphenated last name, include both names in the last name field. Your first name is your given name. Your middle initial is the first letter of your second given name, or the first letter of your middle name, if any.

Other names used: Provide all other names used, if any (including maiden name). If you have had no other legal names, write "N/A."

Address: Provide the address where you currently live, including Street Number and Name, Apartment Number (if applicable), City, State, and Zip Code. Do not provide a post office box address (P.O. Box). Only border commuters from Canada or Mexico may use an international address in this field.

Date of Birth: Provide your date of birth in the mm/dd/yyyy format. For example, January 23, 1950, should be written as 01/23/1950.

U.S. Social Security Number: Provide your 9-digit Social Security number. Providing your Social Security number is voluntary. However, if your employer participates in E-Verify, you must provide your Social Security number.

E-mail Address and Telephone Number (Optional): You may provide your e-mail address and telephone number. Department of Homeland Security (DHS) may contact you if DHS learns of a potential mismatch between the information provided and the information in DHS or Social Security Administration (SSA) records. You may write "N/A" if you choose not to provide this information.

All employees must attest in Section 1, under penalty of perjury, to their citizenship or immigration status by checking one of the following four boxes provided on the form:

1. **A citizen of the United States**
2. **A noncitizen national of the United States:** Noncitizen nationals of the United States are persons born in American Samoa, certain former citizens of the former Trust Territory of the Pacific Islands, and certain children of noncitizen nationals born abroad.
3. **A lawful permanent resident:** A lawful permanent resident is any person who is not a U.S. citizen and who resides in the United States under legally recognized and lawfully recorded permanent residence as an immigrant. The term "lawful permanent resident" includes conditional residents. If you check this box, write either your Alien Registration Number (A-Number) or USCIS Number in the field next to your selection. At this time, the USCIS Number is the same as the A-Number without the "A" prefix.
4. **An alien authorized to work:** If you are not a citizen or national of the United States or a lawful permanent resident, but are authorized to work in the United States, check this box.

   If you check this box:

   a. Record the date that your employment authorization expires, if any. Aliens whose employment authorization does not expire, such as refugees, asylees, and certain citizens of the Federated States of Micronesia, the Republic of the Marshall Islands, or Palau, may write "N/A" on this line.

   b. Next, enter your Alien Registration Number (A-Number)/USCIS Number. At this time, the USCIS Number is the same as your A-Number without the "A" prefix. If you have not received an A-Number/USCIS Number, record your Admission Number. You can find your Admission Number on Form I-94, "Arrival-Departure Record," or as directed by USCIS or U.S. Customs and Border Protection (CBP).

   (1) If you obtained your admission number from CBP in connection with your arrival in the United States, then also record information about the foreign passport you used to enter the United States (number and country of issuance).

   (2) If you obtained your admission number from USCIS *within the United States*, or you entered the United States without a foreign passport, you must write "N/A" in the Foreign Passport Number and Country of Issuance fields.

Sign your name in the "Signature of Employee" block and record the date you completed and signed Section 1. By signing and dating this form, you attest that the citizenship or immigration status you selected is correct and that you are aware that you may be imprisoned and/or fined for making false statements or using false documentation when completing this form. To fully complete this form, you must present to your employer documentation that establishes your identity and employment authorization. Choose which documents to present from the Lists of Acceptable Documents, found on the last page of this form. You must present this documentation no later than the third day after beginning employment, although you may present the required documentation before this date.

Preparer and/or Translator Certification

The Preparer and/or Translator Certification must be completed if the employee requires assistance to complete Section 1 (e.g., the employee needs the instructions or responses translated, someone other than the employee fills out the information blocks, or someone with disabilities needs additional assistance). The employee must still sign Section 1.

Minors and Certain Employees with Disabilities (Special Placement)

Parents or legal guardians assisting minors (individuals under 18) and certain employees with disabilities should review the guidelines in the *Handbook for Employers: Instructions for Completing Form I-9 (M-274)* on **www.uscis.gov/I-9Central** before completing Section 1. These individuals have special procedures for establishing identity if they cannot present an identity document for Form I-9. The special procedures include **(1)** the parent or legal guardian filling out Section 1 and writing "minor under age 18" or "special placement," whichever applies, in the employee signature block; and **(2)** the employer writing "minor under age 18" or "special placement" under List B in Section 2.

Section 2. Employer or Authorized Representative Review and Verification

Before completing Section 2, employers must ensure that Section 1 is completed properly and on time. Employers may not ask an individual to complete Section 1 before he or she has accepted a job offer.

Employers or their authorized representative must complete Section 2 by examining evidence of identity and employment authorization within 3 business days of the employee's first day of employment. For example, if an employee begins employment on Monday, the employer must complete Section 2 by Thursday of that week. However, if an employer hires an individual for less than 3 business days, Section 2 must be completed no later than the first day of employment. An employer may complete Form I-9 before the first day of employment if the employer has offered the individual a job and the individual has accepted.

Employers cannot specify which document(s) employees may present from the Lists of Acceptable Documents, found on the last page of Form I-9, to establish identity and employment authorization. Employees must present one selection from List A **OR** a combination of one selection from List B and one selection from List C. List A contains documents that show both identity and employment authorization. Some List A documents are combination documents. The employee must present combination documents together to be considered a List A document. For example, a foreign passport and a Form I-94 containing an endorsement of the alien's nonimmigrant status must be presented together to be considered a List A document. List B contains documents that show identity only, and List C contains documents that show employment authorization only. If an employee presents a List A document, he or she should **not** present a List B and List C document, and vice versa. If an employer participates in E-Verify, the List B document must include a photograph.

In the field below the Section 2 introduction, employers must enter the last name, first name and middle initial, if any, that the employee entered in Section 1. This will help to identify the pages of the form should they get separated.

Employers or their authorized representative must:

1. Physically examine each original document the employee presents to determine if it reasonably appears to be genuine and to relate to the person presenting it. The person who examines the documents must be the same person who signs Section 2. The examiner of the documents and the employee must both be physically present during the examination of the employee's documents.
2. Record the document title shown on the Lists of Acceptable Documents, issuing authority, document number and expiration date (if any) from the original document(s) the employee presents. You may write "N/A" in any unused fields.

   If the employee is a student or exchange visitor who presented a foreign passport with a Form I-94, the employer should also enter in Section 2:

   a. The student's Form I-20 or DS-2019 number (Student and Exchange Visitor Information System-SEVIS Number); **and** the program end date from Form I-20 or DS-2019.
3. Under Certification, enter the employee's first day of employment. Temporary staffing agencies may enter the first day the employee was placed in a job pool. Recruiters and recruiters for a fee do not enter the employee's first day of employment.
4. Provide the name and title of the person completing Section 2 in the Signature of Employer or Authorized Representative field.
5. Sign and date the attestation on the date Section 2 is completed.
6. Record the employer's business name and address.
7. Return the employee's documentation.

Employers may, but are not required to, photocopy the document(s) presented. If photocopies are made, they should be made for **ALL** new hires or reverifications. Photocopies must be retained and presented with Form I-9 in case of an inspection by DHS or other federal government agency. Employers must always complete Section 2 even if they photocopy an employee's document(s). Making photocopies of an employee's document(s) cannot take the place of completing Form I-9. Employers are still responsible for completing and retaining Form I-9.

Unexpired Documents

Generally, only unexpired, original documentation is acceptable. The only exception is that an employee may present a certified copy of a birth certificate. Additionally, in some instances, a document that appears to be expired may be acceptable if the expiration date shown on the face of the document has been extended, such as for individuals with temporary protected status. Refer to the *Handbook for Employers: Instructions for Completing Form I-9 (M-274)* or I-9 Central (www.uscis.gov/I-9Central) for examples.

Receipts

If an employee is unable to present a required document (or documents), the employee can present an acceptable receipt in lieu of a document from the Lists of Acceptable Documents on the last page of this form. Receipts showing that a person has applied for an initial grant of employment authorization, or for renewal of employment authorization, are not acceptable. Employers cannot accept receipts if employment will last less than 3 days. Receipts are acceptable when completing Form I-9 for a new hire or when reverification is required.

Employees must present receipts within 3 business days of their first day of employment, or in the case of reverification, by the date that reverification is required, and must present valid replacement documents within the time frames described below.

There are three types of acceptable receipts:

1. A receipt showing that the employee has applied to replace a document that was lost, stolen or damaged. The employee must present the actual document within 90 days from the date of hire.
2. The arrival portion of Form I-94/I-94A with a temporary I-551 stamp and a photograph of the individual. The employee must present the actual Permanent Resident Card (Form I-551) by the expiration date of the temporary I-551 stamp, or, if there is no expiration date, within 1 year from the date of issue.
3. The departure portion of Form I-94/I-94A with a refugee admission stamp. The employee must present an unexpired Employment Authorization Document (Form I-766) or a combination of a List B document and an unrestricted Social Security card within 90 days.

When the employee provides an acceptable receipt, the employer should:

1. Record the document title in Section 2 under the sections titled List A, List B, or List C, as applicable.
2. Write the word "receipt" and its document number in the "Document Number" field. Record the last day that the receipt is valid in the "Expiration Date" field.

By the end of the receipt validity period, the employer should:

1. Cross out the word "receipt" and any accompanying document number and expiration date.
2. Record the number and other required document information from the actual document presented.
3. Initial and date the change.

See the *Handbook for Employers: Instructions for Completing Form I-9 (M-274)* at **www.uscis.gov/I-9Central** for more information on receipts.

Section 3. Reverification and Rehires

Employers or their authorized representatives should complete Section 3 when reverifying that an employee is authorized to work. When rehiring an employee within 3 years of the date Form I-9 was originally completed, employers have the option to complete a new Form I-9 or complete Section 3. When completing Section 3 in either a reverification or rehire situation, if the employee's name has changed, record the name change in Block A.

For employees who provide an employment authorization expiration date in Section 1, employers must reverify employment authorization on or before the date provided.

Some employees may write "N/A" in the space provided for the expiration date in Section 1 if they are aliens whose employment authorization does not expire (e.g., asylees, refugees, certain citizens of the Federated States of Micronesia, the Republic of the Marshall Islands, or Palau). Reverification does not apply for such employees unless they chose to present evidence of employment authorization in Section 2 that contains an expiration date and requires reverification, such as Form I-766, Employment Authorization Document.

Reverification applies if evidence of employment authorization (List A or List C document) presented in Section 2 expires. However, employers should not reverify:

1. U.S. citizens and noncitizen nationals; or
2. Lawful permanent residents who presented a Permanent Resident Card (Form I-551) for Section 2.

Reverification does not apply to List B documents.

If both Section 1 and Section 2 indicate expiration dates triggering the reverification requirement, the employer should reverify by the earlier date.

For reverification, an employee must present unexpired documentation from either List A or List C showing he or she is still authorized to work. Employers CANNOT require the employee to present a particular document from List A or List C. The employee may choose which document to present.

To complete Section 3, employers should follow these instructions:

1. Complete Block A if an employee's name has changed at the time you complete Section 3.
2. Complete Block B with the date of rehire if you rehire an employee within 3 years of the date this form was originally completed, and the employee is still authorized to be employed on the same basis as previously indicated on this form. Also complete the "Signature of Employer or Authorized Representative" block.
3. Complete Block C if:
   - **a.** The employment authorization or employment authorization document of a current employee is about to expire and requires reverification; or
   - **b.** You rehire an employee within 3 years of the date this form was originally completed and his or her employment authorization or employment authorization document has expired. (Complete Block B for this employee as well.)

   To complete Block C:
   - **a.** Examine either a List A or List C document the employee presents that shows that the employee is currently authorized to work in the United States; and
   - **b.** Record the document title, document number, and expiration date (if any).
4. After completing block A, B or C, complete the "Signature of Employer or Authorized Representative" block, including the date.

   For reverification purposes, employers may either complete Section 3 of a new Form I-9 or Section 3 of the previously completed Form I-9. Any new pages of Form I-9 completed during reverification must be attached to the employee's original Form I-9. If you choose to complete Section 3 of a new Form I-9, you may attach just the page containing Section 3, with the employee's name entered at the top of the page, to the employee's original Form I-9. If there is a more current version of Form I-9 at the time of reverification, you must complete Section 3 of that version of the form.

What Is the Filing Fee?

There is no fee for completing Form I-9. This form is not filed with USCIS or any government agency. Form I-9 must be retained by the employer and made available for inspection by U.S. Government officials as specified in the **"USCIS Privacy Act Statement"** below.

USCIS Forms and Information

For more detailed information about completing Form I-9, employers and employees should refer to the *Handbook for Employers: Instructions for Completing Form I-9 (M-274)*.

You can also obtain information about Form I-9 from the USCIS Web site at www.uscis.gov/I-9Central, by e-mailing USCIS at **I-9Central@dhs.gov**, or by calling **1-888-464-4218**. For TDD (hearing impaired), call **1-877-875-6028**.

To obtain USCIS forms or the *Handbook for Employers*, you can download them from the USCIS Web site at www.uscis.gov/forms. You may order USCIS forms by calling our toll-free number at **1-800-870-3676**. You may also obtain forms and information by contacting the USCIS National Customer Service Center at **1-800-375-5283**. For TDD (hearing impaired), call **1-800-767-1833**.

Information about E-Verify, a free and voluntary program that allows participating employers to electronically verify the employment eligibility of their newly hired employees, can be obtained from the USCIS Web site at www.dhs.gov/E-Verify, by e-mailing USCIS at **E-Verify@dhs.gov** or by calling **1-888-464-4218**. For TDD (hearing impaired), call **1-877-875-6028.**

Employees with questions about Form I-9 and/or E-Verify can reach the USCIS employee hotline by calling **1-888-897-7781**. For TDD (hearing impaired), call **1-877-875-6028.**

Photocopying and Retaining Form I-9

A blank Form I-9 may be reproduced, provided all sides are copied. The instructions and Lists of Acceptable Documents must be available to all employees completing this form. Employers must retain each employee's completed Form I-9 for as long as the individual works for the employer. Employers are required to retain the pages of the form on which the employee and employer enter data. If copies of documentation presented by the employee are made, those copies must also be kept with the form. Once the individual's employment ends, the employer must retain this form for either 3 years after the date of hire or 1 year after the date employment ended, whichever is later.

Form I-9 may be signed and retained electronically, in compliance with Department of Homeland Security regulations at 8 CFR 274a.2.

USCIS Privacy Act Statement

AUTHORITIES: The authority for collecting this information is the Immigration Reform and Control Act of 1986, Public Law 99-603 (8 USC 1324a).

PURPOSE: This information is collected by employers to comply with the requirements of the Immigration Reform and Control Act of 1986. This law requires that employers verify the identity and employment authorization of individuals they hire for employment to preclude the unlawful hiring, or recruiting or referring for a fee, of aliens who are not authorized to work in the United States.

DISCLOSURE: Submission of the information required in this form is voluntary. However, failure of the employer to ensure proper completion of this form for each employee may result in the imposition of civil or criminal penalties. In addition, employing individuals knowing that they are unauthorized to work in the United States may subject the employer to civil and/or criminal penalties.

ROUTINE USES: This information will be used by employers as a record of their basis for determining eligibility of an employee to work in the United States. The employer will keep this form and make it available for inspection by authorized officials of the Department of Homeland Security, Department of Labor, and Office of Special Counsel for Immigration-Related Unfair Employment Practices.

Paperwork Reduction Act

An agency may not conduct or sponsor an information collection and a person is not required to respond to a collection of information unless it displays a currently valid OMB control number. The public reporting burden for this collection of information is estimated at 35 minutes per response, including the time for reviewing instructions and completing and retaining the form. Send comments regarding this burden estimate or any other aspect of this collection of information, including suggestions for reducing this burden, to: U.S. Citizenship and Immigration Services, Regulatory Coordination Division, Office of Policy and Strategy, 20 Massachusetts Avenue NW, Washington, DC 20529-2140; OMB No. 1615-0047. **Do not mail your completed Form I-9 to this address.**

Employment Eligibility Verification

Department of Homeland Security
U.S. Citizenship and Immigration Services

USCIS
Form I-9
OMB No. 1615-0047
Expires 03/31/2016

▶START HERE. Read instructions carefully before completing this form. The instructions must be available during completion of this form.

ANTI-DISCRIMINATION NOTICE: It is illegal to discriminate against work-authorized individuals. Employers **CANNOT** specify which document(s) they will accept from an employee. The refusal to hire an individual because the documentation presented has a future expiration date may also constitute illegal discrimination.

Section 1. Employee Information and Attestation *(Employees must complete and sign Section 1 of Form I-9 no later than the **first day of employment**, but not before accepting a job offer.)*

Last Name (*Family Name*)	First Name (*Given Name*)	Middle Initial	Other Names Used (*if any*)

Address (*Street Number and Name*)	Apt. Number	City or Town	State	Zip Code

Date of Birth (*mm/dd/yyyy*)	U.S. Social Security Number	E-mail Address	Telephone Number
	- -		

I am aware that federal law provides for imprisonment and/or fines for false statements or use of false documents in connection with the completion of this form.

I attest, under penalty of perjury, that I am (check one of the following):

☐ A citizen of the United States

☐ A noncitizen national of the United States *(See instructions)*

☐ A lawful permanent resident (Alien Registration Number/USCIS Number): _____

☐ An alien authorized to work until (expiration date, if applicable, mm/dd/yyyy) _____. Some aliens may write "N/A" in this field. *(See instructions)*

*For aliens authorized to work, provide your Alien Registration Number/USCIS Number **OR** Form I-94 Admission Number:*

1. Alien Registration Number/USCIS Number: _____

OR

2. Form I-94 Admission Number: _____

If you obtained your admission number from CBP in connection with your arrival in the United States, include the following:

Foreign Passport Number: _____

Country of Issuance: _____

Some aliens may write "N/A" on the Foreign Passport Number and Country of Issuance fields. (*See instructions*)

3-D Barcode
Do Not Write in This Space

Signature of Employee:	Date (*mm/dd/yyyy*):

Preparer and/or Translator Certification *(To be completed and signed if Section 1 is prepared by a person other than the employee.)*

I attest, under penalty of perjury, that I have assisted in the completion of this form and that to the best of my knowledge the information is true and correct.

Signature of Preparer or Translator:	Date (*mm/dd/yyyy*):

Last Name (*Family Name*)	First Name (*Given Name*)

Address (*Street Number and Name*)	City or Town	State	Zip Code

STOP ***Employer Completes Next Page*** STOP

Section 2. Employer or Authorized Representative Review and Verification

(Employers or their authorized representative must complete and sign Section 2 within 3 business days of the employee's first day of employment. You must physically examine one document from List A OR examine a combination of one document from List B and one document from List C as listed on the "Lists of Acceptable Documents" on the next page of this form. For each document you review, record the following information: document title, issuing authority, document number, and expiration date, if any.)

Employee Last Name, First Name and Middle Initial from Section 1:

List A Identity and Employment Authorization	**OR**	**List B** Identity	**AND**	**List C** Employment Authorization
Document Title:		Document Title:		Document Title:
Issuing Authority:		Issuing Authority:		Issuing Authority:
Document Number:		Document Number:		Document Number:
Expiration Date *(if any)(mm/dd/yyyy)*:		Expiration Date *(if any)(mm/dd/yyyy)*:		Expiration Date *(if any)(mm/dd/yyyy)*:
Document Title:				
Issuing Authority:				
Document Number:				
Expiration Date *(if any)(mm/dd/yyyy)*:				
Document Title:				
Issuing Authority:				
Document Number:				
Expiration Date *(if any)(mm/dd/yyyy)*:				

3-D Barcode
Do Not Write in This Space

Certification

I attest, under penalty of perjury, that (1) I have examined the document(s) presented by the above-named employee, (2) the above-listed document(s) appear to be genuine and to relate to the employee named, and (3) to the best of my knowledge the employee is authorized to work in the United States.

The employee's first day of employment *(mm/dd/yyyy)*: _____ (*See instructions for exemptions.*)

Signature of Employer or Authorized Representative	Date *(mm/dd/yyyy)*	Title of Employer or Authorized Representative	
Last Name *(Family Name)*	First Name *(Given Name)*	Employer's Business or Organization Name	
Employer's Business or Organization Address *(Street Number and Name)*	City or Town	State	Zip Code

Section 3. Reverification and Rehires *(To be completed and signed by employer or authorized representative.)*

A. New Name *(if applicable)* Last Name *(Family Name)*	First Name *(Given Name)*	Middle Initial	**B.** Date of Rehire *(if applicable) (mm/dd/yyyy)*:

C. If employee's previous grant of employment authorization has expired, provide the information for the document from List A or List C the employee presented that establishes current employment authorization in the space provided below.

Document Title:	Document Number:	Expiration Date *(if any)(mm/dd/yyyy)*:

I attest, under penalty of perjury, that to the best of my knowledge, this employee is authorized to work in the United States, and if the employee presented document(s), the document(s) I have examined appear to be genuine and to relate to the individual.

Signature of Employer or Authorized Representative:	Date *(mm/dd/yyyy)*:	Print Name of Employer or Authorized Representative:

LISTS OF ACCEPTABLE DOCUMENTS
All documents must be UNEXPIRED

Employees may present one selection from List A
or a combination of one selection from List B and one selection from List C.

LIST A Documents that Establish Both Identity and Employment Authorization	OR	LIST B Documents that Establish Identity	AND	LIST C Documents that Establish Employment Authorization
1. U.S. Passport or U.S. Passport Card		**1.** Driver's license or ID card issued by a State or outlying possession of the United States provided it contains a photograph or information such as name, date of birth, gender, height, eye color, and address		**1.** A Social Security Account Number card, unless the card includes one of the following restrictions: (1) NOT VALID FOR EMPLOYMENT (2) VALID FOR WORK ONLY WITH INS AUTHORIZATION (3) VALID FOR WORK ONLY WITH DHS AUTHORIZATION
2. Permanent Resident Card or Alien Registration Receipt Card (Form I-551)		**2.** ID card issued by federal, state or local government agencies or entities, provided it contains a photograph or information such as name, date of birth, gender, height, eye color, and address		**2.** Certification of Birth Abroad issued by the Department of State (Form FS-545)
3. Foreign passport that contains a temporary I-551 stamp or temporary I-551 printed notation on a machine-readable immigrant visa		**3.** School ID card with a photograph		**3.** Certification of Report of Birth issued by the Department of State (Form DS-1350)
4. Employment Authorization Document that contains a photograph (Form I-766)		**4.** Voter's registration card		**4.** Original or certified copy of birth certificate issued by a State, county, municipal authority, or territory of the United States bearing an official seal
5. For a nonimmigrant alien authorized to work for a specific employer because of his or her status: **a.** Foreign passport; and **b.** Form I-94 or Form I-94A that has the following: (1) The same name as the passport; and (2) An endorsement of the alien's nonimmigrant status as long as that period of endorsement has not yet expired and the proposed employment is not in conflict with any restrictions or limitations identified on the form.		**5.** U.S. Military card or draft record		**5.** Native American tribal document
		6. Military dependent's ID card		**6.** U.S. Citizen ID Card (Form I-197)
		7. U.S. Coast Guard Merchant Mariner Card		**7.** Identification Card for Use of Resident Citizen in the United States (Form I-179)
		8. Native American tribal document		**8.** Employment authorization document issued by the Department of Homeland Security
		9. Driver's license issued by a Canadian government authority		
6. Passport from the Federated States of Micronesia (FSM) or the Republic of the Marshall Islands (RMI) with Form I-94 or Form I-94A indicating nonimmigrant admission under the Compact of Free Association Between the United States and the FSM or RMI		**For persons under age 18 who are unable to present a document listed above:**		
		10. School record or report card		
		11. Clinic, doctor, or hospital record		
		12. Day-care or nursery school record		

Illustrations of many of these documents appear in Part 8 of the Handbook for Employers (M-274).

Refer to Section 2 of the instructions, titled "Employer or Authorized Representative Review and Verification," for more information about acceptable receipts.

Attachment 2

Base Access Application (Form 5530)

NAVSUPPACT MID-SOUTH BUILDING CAC ACCESS / ISSUE APPLICATION
From: ENVIRONMENTAL DIVISION **To:** Email to MILL_BADGE@NAVY.MIL **Subj:** Request for Identification Badge, and access to restricted spaces

APPLICANT INFORMATION				
Name (Last, First, Middle Initial)	Gender:	Citizenship:	SSN:	
Command/Dep. NAVFAC/PWD Mid-South	Title:		Date of Birth:	
Race:	State Drivers License#:			
Height:	Weight:	Hair Color:	Eye Color:	Work Phone:
Company Name:	Contract Exp Date:	Contract Number:		

1. COMMAND ACCESS REQUEST		
☐ New Access	☐ Access Modification	☐ Non-CAC Contractor

2. REASON FOR BADGE ISSUANCE		
☐ Initial Issue	☐ Renewal	☐ Replacement

EXTERNAL BUILDING ACCESS:
External Building(s), Days, and Time for access(EX: 455, Mon-Fri, 0600-1800)

RESTRICTED SPACE(s) ACCESS REQUIRED:
Building(s), Room Number, Days, Time for access(EX: 769, Room 188, 24 X 7)

ONLY COMMAND APPOINTED AUTHORIZED PERSONNEL CAN SIGN REQUEST	
Authorizing Official: (Last Name, First and Middle Initial)	Telephone Number:
Authorizing Official Signature: (N/A when emailed, verified by email from authorizing official)	Date:

Privacy Act Statement

AUTHORITY: 5 U.S.C. 301; EO 12356; EO 9397
PRINCIPAL PURPOSE: To facilitate verification of a personnel security clearance for an individual applying for building access in connection with their livelihood or official duties.
ROUTINE USES; Information may be furnished to Federal, state, or local agencies for regulatory and law enforcement purposes.
DISCLOSURE: Voluntary; however, refusal to furnish requested information may result in inability to verify essential personal information and approve requested building pass application.

Appendix D
Laboratory Accreditation Certificate

LABORATORY ACCREDITATION BUREAU

Certificate of Accreditation

ISO/IEC 17025:2005 Certificate Number L2226

Empirical Laboratories, LLC

621 Mainstream Drive, Suite 270
Nashville TN 37228

has met the requirements set forth in L-A-B's policies and procedures, all requirements of ISO/IEC 17025:2005 "General Requirements for the competence of Testing and Calibration Laboratories" and the U.S. Department of Defense Environmental Laboratory Accreditation Program (DoD ELAP).*

The accredited lab has demonstrated technical competence to a defined "Scope of Accreditation" and the operation of a laboratory quality management system (refer to joint ISO-ILAC-IAF Communiqué dated 8 January 2009).

Accreditation valid through: November 30, 2015

R. Douglas Leonard, Jr., President, COO
Laboratory Accreditation Bureau
Presented the 30th of January 2013

*See the laboratory's Scope of Accreditation for details of accredited parameters
**Laboratory Accreditation Bureau is found to be in compliance with ISO/IEC 17011:2004 and recognized by ILAC (International Laboratory Accreditation Cooperation) and NACLA (National Cooperation for Laboratory Accreditation).

Scope of Accreditation
For
Empirical Laboratories, LLC

621 Mainstream Drive, Suite 270
Nashville, TN 37228
Marcia K. McGinnity
877-345-1113

In recognition of a successful assessment to ISO/IEC 17025:2005 and the requirements of the DoD Environmental Laboratory Accreditation Program (DoD ELAP) as detailed in the DoD Quality Systems Manual for Environmental Laboratories (DoD QSM v4.2) based on the National Environmental Laboratory Accreditation Conference Chapter 5 Quality Systems Standard (NELAC Voted Revision June 5, 2003), accreditation is granted to Empirical Laboratories, LLC to perform the following tests:

Accreditation granted through: November 30, 2015

Testing - Environmental

Non-Potable Water		
Technology	**Method**	**Analyte**
GC/MS	EPA 8260B; EPA 624	1,1,1,2-Tetrachloroethane
GC/MS	EPA 8260B; EPA 624	1,1,1-Trichloroethane (1,1,1-TCA)
GC/MS	EPA 8260B; EPA 624	1,1,2,2-Tetrachloroethane
GC/MS	EPA 8260B; EPA 624	1,1,2-Trichloro-1,2,2-trifluoroethane (CFC-113; Freon 113)
GC/MS	EPA 8260B; EPA 624	1,1,2-Trichloroethane
GC/MS	EPA 8260B; EPA 624	1,1-Dichloroethane (1,1-DCA)
GC/MS	EPA 8260B; EPA 624	1,1-Dichloroethene (1,1-DCE)
GC/MS	EPA 8260B; EPA 624	1,1-Dichloropropene
GC/MS	EPA 8260B; EPA 624	1,2,3-Trichlorobenzene
GC/MS	EPA 8260B; EPA 624	1,2,3-Trichloropropane
GC/MS	EPA 8260B; EPA 624	1,2,4-Trichlorobenzene
GC/MS	EPA 8260B; EPA 624	1,2,4-Trimethylbenzene
GC/MS	EPA 8260B; EPA 624	1,2-Dibromo-3-chloropropane (DBCP)
GC/MS	EPA 8260B; EPA 624	1,2-Dibromoethane (EDB)
GC/MS	EPA 8260B; EPA 624	1,2-Dichlorobenzene
GC/MS	EPA 8260B; EPA 624	1,2-Dichloroethane (EDC)
GC/MS	EPA 8260B; EPA 624	1,2-Dichloropropane
GC/MS	EPA 8260B; EPA 624	1,3,5-Trimethylbenzene

Non-Potable Water		
Technology	**Method**	**Analyte**
GC/MS	EPA 8260B; EPA 624	1,3-Dichlorobenzene
GC/MS	EPA 8260B; EPA 624	1,3-Dichloropropane
GC/MS	EPA 8260B; EPA 624	1,4-Dichlorobenzene
GC/MS	EPA 8260B; EPA 624	1,4-Dioxane
GC/MS	EPA 8260B; EPA 624	1-Chlorohexane
GC/MS	EPA 8260B; EPA 624	2,2-Dichloropropane
GC/MS	EPA 8260B; EPA 624	2-Butanone (Methyl ethyl ketone; MEK)
GC/MS	EPA 8260B; EPA 624	2-Chloroethyl vinyl ether
GC/MS	EPA 8260B; EPA 624	2-Chlorotoluene
GC/MS	EPA 8260B; EPA 624	2-Hexanone (Methyl butyl ketone; MBK)
GC/MS	EPA 8260B; EPA 624	4-Chlorotoluene
GC/MS	EPA 8260B; EPA 624	4-Methyl-2-pentanone (Methyl isobutyl ketone; MIBK)
GC/MS	EPA 8260B; EPA 624	Acetone
GC/MS	EPA 8260B; EPA 624	Acetonitrile
GC/MS	EPA 8260B; EPA 624	Acrolein
GC/MS	EPA 8260B; EPA 624	Acrylonitrile
GC/MS	EPA 8260B; EPA 624	Allyl chloride
GC/MS	EPA 8260B; EPA 624	Benzene
GC/MS	EPA 8260B; EPA 624	Bromobenzene
GC/MS	EPA 8260B; EPA 624	Bromochloromethane
GC/MS	EPA 8260B; EPA 624	Bromodichloromethane
GC/MS	EPA 8260B; EPA 624	Bromoform
GC/MS	EPA 8260B; EPA 624	Bromomethane
GC/MS	EPA 8260B; EPA 624	Carbon Disulfide
GC/MS	EPA 8260B; EPA 624	Carbon Tetrachloride
GC/MS	EPA 8260B; EPA 624	Chlorobenzene
GC/MS	EPA 8260B; EPA 624	Chloroethane
GC/MS	EPA 8260B; EPA 624	Chloroform
GC/MS	EPA 8260B; EPA 624	Chloromethane
GC/MS	EPA 8260B; EPA 624	Chloroprene
GC/MS	EPA 8260B; EPA 624	cis-1,2-Dichloroethene (cis-1,2-DCE)
GC/MS	EPA 8260B; EPA 624	cis-1,3-Dichloropropene
GC/MS	EPA 8260B; EPA 624	cis-1,4-Dichloro-2-butene

Non-Potable Water		
Technology	**Method**	**Analyte**
GC/MS	EPA 8260B; EPA 624	Cyclohexane
GC/MS	EPA 8260B; EPA 624	Dibromochloromethane
GC/MS	EPA 8260B; EPA 624	Dibromomethane
GC/MS	EPA 8260B; EPA 624	Dichlorodifluoromethane (CFC-12)
GC/MS	EPA 8260B; EPA 624	Di-isopropyl ether
GC/MS	EPA 8260B; EPA 624	ETBE
GC/MS	EPA 8260B; EPA 624	Ethyl methacrylate
GC/MS	EPA 8260B; EPA 624	Ethylbenzene
GC/MS	EPA 8260B; EPA 624	Hexachlorobutadiene
GC/MS	EPA 8260B; EPA 624	Hexane
GC/MS	EPA 8260B; EPA 624	Iodomethane
GC/MS	EPA 8260B; EPA 624	Isobutyl alcohol
GC/MS	EPA 8260B; EPA 624	Isopropylbenzene (Cumene)
GC/MS	EPA 8260B; EPA 624	Methacrylonitrile
GC/MS	EPA 8260B; EPA 624	Methyl Acetate
GC/MS	EPA 8260B; EPA 624	Methyl methacrylate
GC/MS	EPA 8260B; EPA 624	Methyl Tertiary Butyl Ether (MTBE)
GC/MS	EPA 8260B; EPA 624	Methylcyclohexane
GC/MS	EPA 8260B; EPA 624	Methylene Chloride, or Dichloromethane
GC/MS	EPA 8260B; EPA 624	Naphthalene
GC/MS	EPA 8260B; EPA 624	n-Butylbenzene
GC/MS	EPA 8260B; EPA 624	n-Propylbenzene
GC/MS	EPA 8260B; EPA 624	p-Isopropyltoluene
GC/MS	EPA 8260B; EPA 624	Propionitrile
GC/MS	EPA 8260B; EPA 624	sec-Butylbenzene
GC/MS	EPA 8260B; EPA 624	Styrene
GC/MS	EPA 8260B; EPA 624	t-Butyl alcohol
GC/MS	EPA 8260B; EPA 624	tert-Amyl methyl ether
GC/MS	EPA 8260B; EPA 624	tert-Butylbenzene
GC/MS	EPA 8260B; EPA 624	Tetrachloroethene (PCE; PERC)
GC/MS	EPA 8260B; EPA 624	Tetrahydrofuran
GC/MS	EPA 8260B; EPA 624	Toluene
GC/MS	EPA 8260B; EPA 624	trans-1,2-Dichloroethene (trans-1,2-DCE)

Non-Potable Water		
Technology	**Method**	**Analyte**
GC/MS	EPA 8260B; EPA 624	trans-1,3-Dichloropropene
GC/MS	EPA 8260B; EPA 624	trans-1,4-Dichloro-2-butene
GC/MS	EPA 8260B; EPA 624	Trichloroethene (TCE)
GC/MS	EPA 8260B; EPA 624	Trichlorofluoromethane (CFC-11)
GC/MS	EPA 8260B; EPA 624	Vinyl acetate
GC/MS	EPA 8260B; EPA 624	Vinyl Chloride (VC)
GC/MS	EPA 8260B; EPA 624	m,p-Xylenes
GC/MS	EPA 8260B; EPA 624	o-Xylene
GC/MS	EPA 8260B; EPA 624	Xylenes (Total)
GC/MS	EPA 8270C/D; EPA 625	1,1'-Biphenyl
GC/MS	EPA 8270C/D; EPA 625	1,2,4,5-Tetrachlorobenzene
GC/MS	EPA 8270C/D; EPA 625	1,2,4-Trichlorobenzene
GC/MS	EPA 8270C/D; EPA 625	1,2-Dichlorobenzene
GC/MS	EPA 8270C/D; EPA 625	1,2-Diphenylhydrazine
GC/MS	EPA 8270C/D; EPA 625	1,3-Dichlorobenzene
GC/MS	EPA 8270C/D; EPA 625	1,4-Dichlorobenzene
GC/MS	EPA 8270C/D; EPA 625	1,4-Dioxane
GC/MS	EPA 8270C/D; EPA 625	1-Methylnaphthalene
GC/MS	EPA 8270C/D; EPA 625	2,3,4,6-Tetrachlorophenol
GC/MS	EPA 8270C/D; EPA 625	2,4,5-Trichlorophenol
GC/MS	EPA 8270C/D; EPA 625	2,4,6-Trichlorophenol (TCP)
GC/MS	EPA 8270C/D; EPA 625	2,4-Dichlorophenol (DCP)
GC/MS	EPA 8270C/D; EPA 625	2,4-Dimethylphenol
GC/MS	EPA 8270C/D; EPA 625	2,4-Dinitrophenol
GC/MS	EPA 8270C/D; EPA 625	2,4-Dinitrotoluene (DNT)
GC/MS	EPA 8270C/D; EPA 625	2,6-Dichlorophenol
GC/MS	EPA 8270C/D; EPA 625	2,6-Dinitrotoluene
GC/MS	EPA 8270C/D; EPA 625	2-Chloronaphthalene
GC/MS	EPA 8270C/D; EPA 625	2-Chlorophenol
GC/MS	EPA 8270C/D; EPA 625	2-Methylnaphthalene
GC/MS	EPA 8270C/D; EPA 625	2-Methylphenol (o-Cresol)
GC/MS	EPA 8270C/D; EPA 625	2-Nitroaniline
GC/MS	EPA 8270C/D; EPA 625	2-Nitrophenol (ONP)

Non-Potable Water		
Technology	**Method**	**Analyte**
GC/MS	EPA 8270C/D; EPA 625	3,3'-Dichlorobenzidine (DCB)
GC/MS	EPA 8270C/D; EPA 625	3-Methylphenol/4-Methylphenol
GC/MS	EPA 8270C/D; EPA 625	3-Nitroaniline
GC/MS	EPA 8270C/D; EPA 625	4,6-Dinitro-2-methylphenol (DNOC)
GC/MS	EPA 8270C/D; EPA 625	4-Bromophenyl phenyl ether
GC/MS	EPA 8270C/D; EPA 625	4-Chloro-3-methylphenol
GC/MS	EPA 8270C/D; EPA 625	4-Chloroaniline
GC/MS	EPA 8270C/D; EPA 625	4-Chlorophenyl phenyl ether
GC/MS	EPA 8270C/D; EPA 625	4-Methylphenol (p-Cresol)
GC/MS	EPA 8270C/D; EPA 625	4-Nitroaniline (PNA)
GC/MS	EPA 8270C/D; EPA 625	4-Nitrophenol (PNP)
GC/MS	EPA 8270C/D; EPA 625	Acenaphthene
GC/MS	EPA 8270C/D; EPA 625	Acenaphthylene
GC/MS	EPA 8270C/D; EPA 625	Acetophenone
GC/MS	EPA 8270C/D; EPA 625	Aniline
GC/MS	EPA 8270C/D; EPA 625	Anthracene
GC/MS	EPA 8270C/D; EPA 625	Atrazine
GC/MS	EPA 8270C/D; EPA 625	Benzaldehyde
GC/MS	EPA 8270C/D; EPA 625	Benzidine
GC/MS	EPA 8270C/D; EPA 625	Benzo(a)anthracene
GC/MS	EPA 8270C/D; EPA 625	Benzo(a)pyrene
GC/MS	EPA 8270C/D; EPA 625	Benzo(b)fluoranthene
GC/MS	EPA 8270C/D; EPA 625	Benzo(g,h,i)perylene
GC/MS	EPA 8270C/D; EPA 625	Benzo(k)fluoranthene
GC/MS	EPA 8270C/D; EPA 625	Benzoic Acid
GC/MS	EPA 8270C/D; EPA 625	Benzyl alcohol
GC/MS	EPA 8270C/D; EPA 625	bis(2-Chloroethoxy)methane
GC/MS	EPA 8270C/D; EPA 625	bis(2-Chloroethyl)ether (BCEE)
GC/MS	EPA 8270C/D; EPA 625	bis(2-chloroisopropyl)ether, or 2,2'-oxybis (1-Chloropropane)
GC/MS	EPA 8270C/D; EPA 625	bis(2-Ethylhexyl)phthalate (BEHP)
GC/MS	EPA 8270C/D; EPA 625	Butyl benzyl phthalate (BBP)
GC/MS	EPA 8270C/D; EPA 625	Caprolactam
GC/MS	EPA 8270C/D; EPA 625	Carbazole

Non-Potable Water		
Technology	**Method**	**Analyte**
GC/MS	EPA 8270C/D; EPA 625	Chrysene
GC/MS	EPA 8270C/D; EPA 625	Dibenz(a,h)anthracene
GC/MS	EPA 8270C/D; EPA 625	Dibenzofuran (DBF)
GC/MS	EPA 8270C/D; EPA 625	Diethyl phthalate (DEP)
GC/MS	EPA 8270C/D; EPA 625	Dimethyl phthalate (DMP)
GC/MS	EPA 8270C/D; EPA 625	Di-n-butyl phthalate (DBP)
GC/MS	EPA 8270C/D; EPA 625	Di-n-octyl phthalate (DNOP)
GC/MS	EPA 8270C/D; EPA 625	Fluoranthene
GC/MS	EPA 8270C/D; EPA 625	Fluorene
GC/MS	EPA 8270C/D; EPA 625	Hexachlorobenzene (HCB)
GC/MS	EPA 8270C/D; EPA 625	Hexachlorobutadiene (HCBD)
GC/MS	EPA 8270C/D; EPA 625	Hexachlorocyclopentadiene (HCCPD)
GC/MS	EPA 8270C/D; EPA 625	Hexachloroethane (HCE)
GC/MS	EPA 8270C/D; EPA 625	Indeno(1,2,3-cd)pyrene
GC/MS	EPA 8270C/D; EPA 625	Isophorone
GC/MS	EPA 8270C/D; EPA 625	Naphthalene
GC/MS	EPA 8270C/D; EPA 625	Nitrobenzene
GC/MS	EPA 8270C/D; EPA 625	N-Nitrosodimethylamine
GC/MS	EPA 8270C/D; EPA 625	N-Nitroso-di-n-propylamine (NDPA)
GC/MS	EPA 8270C/D; EPA 625	N-nitrosodiphenylamine (NDPHA)
GC/MS	EPA 8270C/D; EPA 625	Pentachlorophenol
GC/MS	EPA 8270C/D; EPA 625	Phenanthrene
GC/MS	EPA 8270C/D; EPA 625	Phenol
GC/MS	EPA 8270C/D; EPA 625	Pyrene
GC/MS	EPA 8270C/D; EPA 625	Pyridine
GC/ECD	EPA 8081A/B	4,4'-DDD
GC/ECD	EPA 8081A/B	4,4'-DDE
GC/ECD	EPA 8081A/B	4,4'-DDT
GC/ECD	EPA 8081A/B	Aldrin
GC/ECD	EPA 8081A/B	alpha-BHC (alpha-HCH)
GC/ECD	EPA 8081A/B	alpha-Chlordane
GC/ECD	EPA 8081A/B	beta-BHC (beta-HCH)
GC/ECD	EPA 8081A/B	delta-BHC (delta-HCH)

Non-Potable Water		
Technology	**Method**	**Analyte**
GC/ECD	EPA 8081A/B	Dieldrin
GC/ECD	EPA 8081A/B	Endosulfan I
GC/ECD	EPA 8081A/B	Endosulfan II
GC/ECD	EPA 8081A/B	Endosulfan sulfate
GC/ECD	EPA 8081A/B	Endrin
GC/ECD	EPA 8081A/B	Endrin aldehyde
GC/ECD	EPA 8081A/B	Endrin ketone
GC/ECD	EPA 8081A/B	gamma-BHC (Lindane; gamma-HCH)
GC/ECD	EPA 8081A/B	gamma-Chlordane
GC/ECD	EPA 8081A/B	Heptachlor
GC/ECD	EPA 8081A/B	Heptachlor epoxide
GC/ECD	EPA 8081A/B	Methoxychlor
GC/ECD	EPA 8081A/B	Chlordane (n.o.s.)
GC/ECD	EPA 8081A/B	Toxaphene
GC/ECD	EPA 8082A	Aroclor-1016
GC/ECD	EPA 8082A	Aroclor-1221
GC/ECD	EPA 8082A	Aroclor-1232
GC/ECD	EPA 8082A	Aroclor-1242
GC/ECD	EPA 8082A	Aroclor-1248
GC/ECD	EPA 8082A	Aroclor-1254
GC/ECD	EPA 8082A	Aroclor-1260
GC/ECD	EPA 8082A	Aroclor-1262
GC/ECD	EPA 8082A	Aroclor-1268
GC/ECD	EPA 8151A	2,4,5-T
GC/ECD	EPA 8151A	2,4,5-TP (Silvex)
GC/ECD	EPA 8151A	2,4-D
GC/ECD	EPA 8151A	2,4-DB
GC/ECD	EPA 8151A	Dalapon
GC/ECD	EPA 8151A	Dicamba
GC/ECD	EPA 8151A	Dichlorprop
GC/ECD	EPA 8151A	Dinoseb
GC/ECD	EPA 8151A	MCPA
GC/ECD	EPA 8151A	MCPP (Mecoprop)

Non-Potable Water		
Technology	**Method**	**Analyte**
HPLC/UV	EPA 8330A/B	1,3,5-Trinitrobenzene
HPLC/UV	EPA 8330A/B	1,3-Dinitrobenzene
HPLC/UV	EPA 8330A/B	2,4,6-Trinitrophenylmethylnitramine (Tetryl)
HPLC/UV	EPA 8330A/B	2,4,6-Trinitrotoluene (TNT)
HPLC/UV	EPA 8330A/B	2,4-Dinitrotoluene (DNT)
HPLC/UV	EPA 8330A/B	2,6-Dinitrotoluene
HPLC/UV	EPA 8330A/B	2-Amino-4,6-dinitrotoluene
HPLC/UV	EPA 8330A/B	2-Nitrotoluene (ONT)
HPLC/UV	EPA 8330A/B	3,5-Dinitroaniline
HPLC/UV	EPA 8330A/B	3-Nitrotoluene
HPLC/UV	EPA 8330A/B	4-Amino-2,6-dinitrotoluene
HPLC/UV	EPA 8330A/B	4-Nitrotoluene (PNT)
HPLC/UV	EPA 8330A/B	Hexahydro-1,3,5-trinitro-1,3,5-triazine (RDX)
HPLC/UV	EPA 8330A/B	Nitrobenzene
HPLC/UV	EPA 8330A/B	Nitroglycerin
HPLC/UV	EPA 8330A/B	Nitroguanidine
HPLC/UV	EPA 8330A/B	Octahydro-1,3,5,7-tetranitro-1,3,5,7-tetrazocine (HMX)
HPLC/UV	EPA 8330A/B	3,5-Dinitroaniline
HPLC/UV	EPA 8330A/B	PETN
GC/FID	FLPRO	Petroleum Range Organics
GC/FID	EPA 8015B/C	TPH DRO
GC/FID	EPA 8015B/C	TPH ORO
GC/FID	EPA 8015B/C	TPH GRO
GC/FID	RSK-175	Methane
GC/FID	RSK-175	Ethane
GC/FID	RSK-175	Ethene
GC/ECD	EPA 8011	1,2-Dibromoethane (EDB)
GC/ECD	EPA 8011	1,2-Dibromo-3-chloropropane (DBCP)
HPLC/MS	EPA 6850	Perchlorate
ICP	EPA 6010B/C; EPA 200.7	Aluminum
ICP	EPA 6010B/C; EPA 200.7	Antimony
ICP	EPA 6010B/C; EPA 200.7	Arsenic
ICP	EPA 6010B/C; EPA 200.7	Barium

Non-Potable Water		
Technology	**Method**	**Analyte**
ICP	EPA 6010B/C; EPA 200.7	Beryllium
ICP	EPA 6010B/C; EPA 200.7	Boron
ICP	EPA 6010B/C; EPA 200.7	Cadmium
ICP	EPA 6010B/C; EPA 200.7	Calcium
ICP	EPA 6010B/C; EPA 200.7	Chromium, total
ICP	EPA 6010B/C; EPA 200.7	Cobalt
ICP	EPA 6010B/C; EPA 200.7	Copper
ICP	EPA 6010B/C; EPA 200.7	Iron
ICP	EPA 6010B/C; EPA 200.7	Lead
ICP	EPA 6010B/C; EPA 200.7	Magnesium
ICP	EPA 6010B/C; EPA 200.7	Manganese
CVAA	EPA 7470A; EPA 245.1	Mercury
ICP	EPA 6010B/C; EPA 200.7	Molybdenum
ICP	EPA 6010B/C; EPA 200.7	Nickel
ICP	EPA 6010B/C; EPA 200.7	Potassium
ICP	EPA 6010B/C; EPA 200.7	Selenium
ICP	EPA 6010B/C; EPA 200.7	Silver
ICP	EPA 6010B/C; EPA 200.7	Sodium
ICP	EPA 6010B/C; EPA 200.7	Strontium
ICP	EPA 6010B/C; EPA 200.7	Thallium
ICP	EPA 6010B/C; EPA 200.7	Tin
ICP	EPA 6010B/C; EPA 200.7	Titanium
ICP	EPA 6010B/C; EPA 200.7	Vanadium
ICP	EPA 6010B/C; EPA 200.7	Zinc
IC	EPA 300.0	Bromide
IC	EPA 300.0	Chloride
IC	EPA 300.0	Fluoride
IC	EPA 300.0	Nitrate
IC	EPA 300.0	Nitrite
IC	EPA 300.0	Sulfate
IC	EPA 9056A	Bromide
IC	EPA 9056A	Chloride
IC	EPA 9056A	Fluoride

Non-Potable Water		
Technology	**Method**	**Analyte**
IC	EPA 9056A	Nitrate
IC	EPA 9056A	Nitrite
IC	EPA 9056A	Sulfate
Colorimetric	SM 4500-NO2 B-2011	Nitrite as N
Titration	SM 2320 B-2011	Alkalinity
Colorimetric	SM 4500-NH3 G-2011	Ammonia
Probe	SM 5210 B-2011	BOD
Probe	SM 5210 B-2011	CBOD
Colorimetric	EPA 410.4	COD
UV/Vis	EPA 7196A SM 3500-Cr B-2011	Hexavalent Chromium
Colorimetric	EPA 353.2 MOD	Nitrocellulose
Colorimetric	EPA 353.2	Nitrate/Nitrite
Gravimetric	EPA 1664A	Oil and Grease
Titration	Chap.7, Sect. 7.3.4 Mod.	Reactive Sulfide
Titration	SM 4500-S2 F-2011	Sulfide
UV/Vis	SM 4500-P B5-2011	Total Phosphorus (as P)
UV/Vis	SM 4500-P E-2011	Ortho-Phosphate (as P)
TOC	EPA 9060A; SM 5310 C-2011	Total Organic Carbon
Gravimetric	SM 2540 C-2011	TDS
Gravimetric	SM 2540 D-2011	TSS
Colorimetric	EPA 9012A/B SM 4500-CN G-2011	Cyanide
Physical	EPA 1010A	Ignitability / Flashpoint
Physical	EPA 9095B	Paint Filter
Probe	EPA 9040B/C SM 4500-H+ B-2011	pH(Corrosivity)
Preparation	**Method**	**Type**
Preparation	EPA 1311	TCLP
Preparation	EPA 3005A	Metals digestion
Preparation	EPA 3010A	Metals digestion
Preparation	EPA 3510C	Organics Liquid Extraction
Preparation	EPA 5030A/B	Purge and Trap Water

Solid and Chemical Materials		
Technology	**Method**	**Analyte**
GC/MS	EPA 8260B	1,1,1-Trichloroethane (1,1,1-TCA)
GC/MS	EPA 8260B	1,1,1,2-Tetrachloroethane
GC/MS	EPA 8260B	1,1,2,2-Tetrachloroethane
GC/MS	EPA 8260B	1,1,2-Trichloro-1,2,2-trifluoroethane (CFC-113; Freon 113)
GC/MS	EPA 8260B	1,1,2-Trichloroethane
GC/MS	EPA 8260B	1,1-Dichloroethane (1,1-DCA)
GC/MS	EPA 8260B	1,1-Dichloroethene (1,1-DCE)
GC/MS	EPA 8260B	1,1-Dichloropropene
GC/MS	EPA 8260B	1,2,3-Trichlorobenzene
GC/MS	EPA 8260B	1,2,3-Trichloropropane
GC/MS	EPA 8260B	1,2,4-Trichlorobenzene
GC/MS	EPA 8260B	1,2,4-Trimethylbenzene
GC/MS	EPA 8260B	1,2-Dibromo-3-chloropropane (DBCP)
GC/MS	EPA 8260B	1,2-Dibromoethane (EDB)
GC/MS	EPA 8260B	1,2-Dichlorobenzene
GC/MS	EPA 8260B	1,2-Dichloroethane (EDC)
GC/MS	EPA 8260B	1,2-Dichloropropane
GC/MS	EPA 8260B	1,3,5-Trimethylbenzene
GC/MS	EPA 8260B	1,3-Dichlorobenzene
GC/MS	EPA 8260B	1,3-Dichloropropane
GC/MS	EPA 8260B	1,4-Dichlorobenzene
GC/MS	EPA 8260B	1,4-Dioxane
GC/MS	EPA 8260B	1-Chlorohexane
GC/MS	EPA 8260B	2,2-Dichloropropane
GC/MS	EPA 8260B	2-Butanone (Methyl ethyl ketone; MEK)
GC/MS	EPA 8260B	2-Chloroethyl vinyl ether
GC/MS	EPA 8260B	2-Chlorotoluene
GC/MS	EPA 8260B	2-Hexanone (Methyl butyl ketone; MBK)
GC/MS	EPA 8260B	4-Chlorotoluene
GC/MS	EPA 8260B	4-Methyl-2-pentanone (Methyl isobutyl ketone; MIBK)
GC/MS	EPA 8260B	Acetone
GC/MS	EPA 8260B	Acetonitrile

Solid and Chemical Materials		
Technology	**Method**	**Analyte**
GC/MS	EPA 8260B	Acrolein
GC/MS	EPA 8260B	Acrylonitrile
GC/MS	EPA 8260B	Allyl chloride
GC/MS	EPA 8260B	Benzene
GC/MS	EPA 8260B	Bromobenzene
GC/MS	EPA 8260B	Bromochloromethane
GC/MS	EPA 8260B	Bromodichloromethane
GC/MS	EPA 8260B	Bromoform
GC/MS	EPA 8260B	Bromomethane
GC/MS	EPA 8260B	Carbon Disulfide
GC/MS	EPA 8260B	Carbon Tetrachloride
GC/MS	EPA 8260B	Chlorobenzene
GC/MS	EPA 8260B	Chloroethane
GC/MS	EPA 8260B	Chloroform
GC/MS	EPA 8260B	Chloromethane
GC/MS	EPA 8260B	Chloroprene
GC/MS	EPA 8260B	cis-1,2-Dichloroethene (cis-1,2-DCE)
GC/MS	EPA 8260B	cis-1,3-Dichloropropene
GC/MS	EPA 8260B	cis-1,4-Dichloro-2-butene
GC/MS	EPA 8260B	Cyclohexane
GC/MS	EPA 8260B	Dibromochloromethane
GC/MS	EPA 8260B	Dibromomethane
GC/MS	EPA 8260B	Dichlorodifluoromethane (CFC-12)
GC/MS	EPA 8260B	Di-isopropyl ether
GC/MS	EPA 8260B	ETBE
GC/MS	EPA 8260B	Ethyl methacrylate
GC/MS	EPA 8260B	Ethylbenzene
GC/MS	EPA 8260B	Hexachlorobutadiene
GC/MS	EPA 8260B	Hexane
GC/MS	EPA 8260B	Iodomethane
GC/MS	EPA 8260B	Isobutyl alcohol
GC/MS	EPA 8260B	Isopropylbenzene (Cumene)

Solid and Chemical Materials		
Technology	**Method**	**Analyte**
GC/MS	EPA 8260B	m,p-Xylenes
GC/MS	EPA 8260B	Methacrylonitrile
GC/MS	EPA 8260B	Methyl Acetate
GC/MS	EPA 8260B	Methyl methacrylate
GC/MS	EPA 8260B	Methyl Tertiary Butyl Ether (MTBE)
GC/MS	EPA 8260B	Methylcyclohexane
GC/MS	EPA 8260B	Methylene Chloride, or Dichloromethane
GC/MS	EPA 8260B	Naphthalene
GC/MS	EPA 8260B	n-Butylbenzene
GC/MS	EPA 8260B	n-Propylbenzene
GC/MS	EPA 8260B	o-Xylene
GC/MS	EPA 8260B	p-Isopropyltoluene
GC/MS	EPA 8260B	Propionitrile
GC/MS	EPA 8260B	sec-Butylbenzene
GC/MS	EPA 8260B	Styrene
GC/MS	EPA 8260B	tert-Amyl methyl ether
GC/MS	EPA 8260B	tert-Butyl alcohol
GC/MS	EPA 8260B	tert-Butylbenzene
GC/MS	EPA 8260B	Tetrachloroethene (PCE; PERC)
GC/MS	EPA 8260B	Tetrahydrofuran
GC/MS	EPA 8260B	Toluene
GC/MS	EPA 8260B	trans-1,2-Dichloroethene (trans-1,2-DCE)
GC/MS	EPA 8260B	trans-1,3-Dichloropropene
GC/MS	EPA 8260B	trans-1,4-Dichloro-2-butene
GC/MS	EPA 8260B	Trichloroethene (TCE)
GC/MS	EPA 8260B	Trichlorofluoromethane (CFC-11)
GC/MS	EPA 8260B	Vinyl acetate
GC/MS	EPA 8260B	Vinyl Chloride (VC)
GC/MS	EPA 8260B	Xylenes (Total)
GC/MS	EPA 8270C/D	1,1'-Biphenyl
GC/MS	EPA 8270C/D	1,2,4,5-Tetrachlorobenzene
GC/MS	EPA 8270C/D	1,2,4-Trichlorobenzene

Solid and Chemical Materials		
Technology	**Method**	**Analyte**
GC/MS	EPA 8270C/D	1,2-Dichlorobenzene
GC/MS	EPA 8270C/D	1,2-Diphenylhydrazine
GC/MS	EPA 8270C/D	1,3-Dichlorobenzene
GC/MS	EPA 8270C/D	1,4-Dichlorobenzene
GC/MS	EPA 8270C/D	1,4-Dioxane
GC/MS	EPA 8270C/D	1-Methylnaphthalene
GC/MS	EPA 8270C/D	2,3,4,6-Tetrachlorophenol
GC/MS	EPA 8270C/D	2,4,5-Trichlorophenol
GC/MS	EPA 8270C/D	2,4,6-Trichlorophenol (TCP)
GC/MS	EPA 8270C/D	2,4-Dichlorophenol (DCP)
GC/MS	EPA 8270C/D	2,4-Dimethylphenol
GC/MS	EPA 8270C/D	2,4-Dinitrophenol
GC/MS	EPA 8270C/D	2,4-Dinitrotoluene (DNT)
GC/MS	EPA 8270C/D	2,6-Dichlorophenol
GC/MS	EPA 8270C/D	2,6-Dinitrotoluene
GC/MS	EPA 8270C/D	2-Chloronaphthalene
GC/MS	EPA 8270C/D	2-Chlorophenol
GC/MS	EPA 8270C/D	2-Methylnaphthalene
GC/MS	EPA 8270C/D	2-Methylphenol (o-Cresol)
GC/MS	EPA 8270C/D	2-Nitroaniline
GC/MS	EPA 8270C/D	2-Nitrophenol (ONP)
GC/MS	EPA 8270C/D	3,3'-Dichlorobenzidine (DCB)
GC/MS	EPA 8270C/D	3-Methylphenol/4-Methylphenol
GC/MS	EPA 8270C/D	3-Nitroaniline
GC/MS	EPA 8270C/D	4,6-Dinitro-2-methylphenol (DNOC)
GC/MS	EPA 8270C/D	4-Bromophenyl phenyl ether
GC/MS	EPA 8270C/D	4-Chloro-3-methylphenol
GC/MS	EPA 8270C/D	4-Chloroaniline
GC/MS	EPA 8270C/D	4-Chlorophenyl phenyl ether
GC/MS	EPA 8270C/D	4-Methylphenol (p-Cresol)
GC/MS	EPA 8270C/D	4-Nitroaniline (PNA)
GC/MS	EPA 8270C/D	4-Nitrophenol (PNP)

Solid and Chemical Materials		
Technology	**Method**	**Analyte**
GC/MS	EPA 8270C/D	Acenaphthene
GC/MS	EPA 8270C/D	Acenaphthylene
GC/MS	EPA 8270C/D	Acetophenone
GC/MS	EPA 8270C/D	Aniline
GC/MS	EPA 8270C/D	Anthracene
GC/MS	EPA 8270C/D	Atrazine
GC/MS	EPA 8270C/D	Benzaldehyde
GC/MS	EPA 8270C/D	Benzidine
GC/MS	EPA 8270C/D	Benzo(a)anthracene
GC/MS	EPA 8270C/D	Benzo(a)pyrene
GC/MS	EPA 8270C/D	Benzo(b)fluoranthene
GC/MS	EPA 8270C/D	Benzo(g,h,i)perylene
GC/MS	EPA 8270C/D	Benzo(k)fluoranthene
GC/MS	EPA 8270C/D	Benzoic Acid
GC/MS	EPA 8270C/D	Benzyl alcohol
GC/MS	EPA 8270C/D	bis(2-Chloroethoxy)methane
GC/MS	EPA 8270C/D	bis(2-Chloroethyl)ether (BCEE)
GC/MS	EPA 8270C/D	bis(2-chloroisopropyl)ether, or 2,2'-oxybis (1-Chloropropane)
GC/MS	EPA 8270C/D	bis(2-Ethylhexyl)phthalate (BEHP)
GC/MS	EPA 8270C/D	Butyl benzyl phthalate (BBP)
GC/MS	EPA 8270C/D	Caprolactam
GC/MS	EPA 8270C/D	Carbazole
GC/MS	EPA 8270C/D	Chrysene
GC/MS	EPA 8270C/D	Dibenz(a,h)anthracene
GC/MS	EPA 8270C/D	Dibenzofuran (DBF)
GC/MS	EPA 8270C/D	Diethyl phthalate (DEP)
GC/MS	EPA 8270C/D	Dimethyl phthalate (DMP)
GC/MS	EPA 8270C/D	Di-n-butyl phthalate (DBP)
GC/MS	EPA 8270C/D	Di-n-octyl phthalate (DNOP)
GC/MS	EPA 8270C/D	Fluoranthene
GC/MS	EPA 8270C/D	Fluorene
GC/MS	EPA 8270C/D	Hexachlorobenzene (HCB)

Solid and Chemical Materials		
Technology	**Method**	**Analyte**
GC/MS	EPA 8270C/D	Hexachlorobutadiene (HCBD)
GC/MS	EPA 8270C/D	Hexachlorocyclopentadiene (HCCPD)
GC/MS	EPA 8270C/D	Hexachloroethane (HCE)
GC/MS	EPA 8270C/D	Indeno(1,2,3-cd)pyrene
GC/MS	EPA 8270C/D	Isophorone
GC/MS	EPA 8270C/D	Naphthalene
GC/MS	EPA 8270C/D	Nitrobenzene
GC/MS	EPA 8270C/D	N-Nitrosodimethylamine
GC/MS	EPA 8270C/D	N-Nitroso-di-n-propylamine (NDPA)
GC/MS	EPA 8270C/D	N-nitrosodiphenylamine (NDPHA)
GC/MS	EPA 8270C/D	Pentachlorophenol
GC/MS	EPA 8270C/D	Phenanthrene
GC/MS	EPA 8270C/D	Phenol
GC/MS	EPA 8270C/D	Pyrene
GC/MS	EPA 8270C/D	Pyridine
GC/ECD	EPA 8081A/B	4,4'-DDD
GC/ECD	EPA 8081A/B	4,4'-DDE
GC/ECD	EPA 8081A/B	4,4'-DDT
GC/ECD	EPA 8081A/B	Aldrin
GC/ECD	EPA 8081A/B	alpha-BHC (alpha-HCH)
GC/ECD	EPA 8081A/B	alpha-Chlordane
GC/ECD	EPA 8081A/B	beta-BHC (beta-HCH)
GC/ECD	EPA 8081A/B	delta-BHC (delta-HCH)
GC/ECD	EPA 8081A/B	Chlordane (n.o.s.)
GC/ECD	EPA 8081A/B	Dieldrin
GC/ECD	EPA 8081A/B	Endosulfan I
GC/ECD	EPA 8081A/B	Endosulfan II
GC/ECD	EPA 8081A/B	Endosulfan sulfate
GC/ECD	EPA 8081A/B	Endrin
GC/ECD	EPA 8081A/B	Endrin aldehyde
GC/ECD	EPA 8081A/B	Endrin ketone
GC/ECD	EPA 8081A/B	gamma-BHC (Lindane; gamma-HCH)

Solid and Chemical Materials		
Technology	**Method**	**Analyte**
GC/ECD	EPA 8081A/B	gamma-Chlordane
GC/ECD	EPA 8081A/B	Heptachlor
GC/ECD	EPA 8081A/B	Heptachlor epoxide
GC/ECD	EPA 8081A/B	Methoxychlor
GC/ECD	EPA 8081A/B	Toxaphene
GC/ECD	EPA 8082A	Aroclor-1016
GC/ECD	EPA 8082A	Aroclor-1221
GC/ECD	EPA 8082A	Aroclor-1232
GC/ECD	EPA 8082A	Aroclor-1242
GC/ECD	EPA 8082A	Aroclor-1248
GC/ECD	EPA 8082A	Aroclor-1254
GC/ECD	EPA 8082A	Aroclor-1260
GC/ECD	EPA 8082A	Aroclor-1262
GC/ECD	EPA 8082A	Aroclor-1268
HPLC/UV	EPA 8330A	1,3,5-Trinitrobenzene
HPLC/UV	EPA 8330A	1,3-Dinitrobenzene
HPLC/UV	EPA 8330A	2,4,6-Trinitrophenylmethylnitramine (Tetryl)
HPLC/UV	EPA 8330A	2,4,6-Trinitrotoluene (TNT)
HPLC/UV	EPA 8330A	2,4-Dinitrotoluene (DNT)
HPLC/UV	EPA 8330A	2,6-Dinitrotoluene
HPLC/UV	EPA 8330A	2-Amino-4,6-dinitrotoluene
HPLC/UV	EPA 8330A	2-Nitrotoluene (ONT)
HPLC/UV	EPA 8330A	3-Nitrotoluene
HPLC/UV	EPA 8330A	3,5-Dinitroaniline
HPLC/UV	EPA 8330A	4-Amino-2,6-dinitrotoluene
HPLC/UV	EPA 8330A	4-Nitrotoluene (PNT)
HPLC/UV	EPA 8330A	Hexahydro-1,3,5-trinitro-1,3,5-triazine (RDX)
HPLC/UV	EPA 8330A	Nitroglycerin
HPLC/UV	EPA 8330A	Octahydro-1,3,5,7-tetranitro-1,3,5,7-tetrazocine (HMX)
HPLC/UV	EPA 8330A	Nitrobenzene
HPLC/UV	EPA 8330A	Nitroguanidine
HPLC/UV	EPA 8330A	PETN

Solid and Chemical Materials		
Technology	**Method**	**Analyte**
HPLC/UV	EPA 8330B	1,3,5-Trinitrobenzene
HPLC/UV	EPA 8330B	1,3-Dinitrobenzene
HPLC/UV	EPA 8330B	2,4,6-Trinitrophenylmethylnitramine (Tetryl)
HPLC/UV	EPA 8330B	2,4,6-Trinitrotoluene (TNT)
HPLC/UV	EPA 8330B	2,4-Dinitrotoluene (DNT)
HPLC/UV	EPA 8330B	2,6-Dinitrotoluene
HPLC/UV	EPA 8330B	2-Amino-4,6-dinitrotoluene
HPLC/UV	EPA 8330B	2-Nitrotoluene (ONT)
HPLC/UV	EPA 8330B	3-Nitrotoluene
HPLC/UV	EPA 8330B	3,5-Dinitroaniline
HPLC/UV	EPA 8330B	4-Amino-2,6-dinitrotoluene
HPLC/UV	EPA 8330B	4-Nitrotoluene (PNT)
HPLC/UV	EPA 8330B	Hexahydro-1,3,5-trinitro-1,3,5-triazine (RDX)
HPLC/UV	EPA 8330B	Nitroglycerin
HPLC/UV	EPA 8330B	Octahydro-1,3,5,7-tetranitro-1,3,5,7-tetrazocine (HMX)
HPLC/UV	EPA 8330B	Nitrobenzene
HPLC/UV	EPA 8330B	Nitroguanidine
HPLC/UV	EPA 8330B	PETN
GC/FID	FLPRO	Petroleum Range Organics
GC/FID	EPA 8015B/C	TPH DRO
GC/FID	EPA 8015B/C	TPH ORO
GC/FID	EPA 8015B/C	TPH GRO
HPLC/MS	EPA 6850	Perchlorate
ICP	EPA 6010B/C	Aluminum
ICP	EPA 6010B/C	Antimony
ICP	EPA 6010B/C	Arsenic
ICP	EPA 6010B/C	Barium
ICP	EPA 6010B/C	Beryllium
ICP	EPA 6010B/C	Boron
ICP	EPA 6010B/C	Cadmium
ICP	EPA 6010B/C	Calcium
ICP	EPA 6010B/C	Chromium, total

Solid and Chemical Materials		
Technology	**Method**	**Analyte**
ICP	EPA 6010B/C	Cobalt
ICP	EPA 6010B/C	Copper
ICP	EPA 6010B/C	Iron
ICP	EPA 6010B/C	Lead
ICP	EPA 6010B/C	Magnesium
ICP	EPA 6010B/C	Manganese
CVAA	EPA 7471A/B	Mercury
ICP	EPA 6010B/C	Molybdenum
ICP	EPA 6010B/C	Nickel
ICP	EPA 6010B/C	Potassium
ICP	EPA 6010B/C	Selenium
ICP	EPA 6010B/C	Silver
ICP	EPA 6010B/C	Sodium
ICP	EPA 6010B/C	Strontium
ICP	EPA 6010B/C	Tin
ICP	EPA 6010B/C	Titanium
ICP	EPA 6010B/C	Thallium
ICP	EPA 6010B/C	Vanadium
ICP	EPA 6010B/C	Zinc
IC	EPA 9056A	Bromide
IC	EPA 9056A	Chloride
IC	EPA 9056A	Fluoride
IC	EPA 9056A	Nitrate
IC	EPA 9056A	Nitrite
IC	EPA 9056A	Sulfate
UV/Vis	EPA 7196A	Hexavalent Chromium
TOC	Lloyd Kahn	Total Organic Carbon
Colorimetric	EPA 353.2 MOD	Nitrocellulose

LABORATORY ACCREDITATION BUREAU

Certificate # L2226

Solid and Chemical Materials		
Technology	**Method**	**Analyte**
Colorimetric	EPA 9012A/B	Cyanide
Titration	Chap.7, Sect. 7.3.4 Mod.	Reactive Sulfide
Physical	EPA 1010A	Ignitability/Flashpoint
Titration	EPA 9034	Sulfide
Probe	EPA 9045C/D	pH (Corrosivity)
Preparation	**Method**	**Type**
Preparation	EPA 1311	TCLP
Preparation	EPA 1312	SPLP
Preparation	NJ Modified 3060A	Hexavalent Chromium
Preparation	EPA 3050B	Metals Digestion
Preparation	EPA 3546	Organics Microwave Extraction
Preparation	EPA 3550B/C	Organics Sonication
Preparation	SM 2540 B-1997	Percent Solids (Percent Moisture)
Preparation	EPA 5035 /A	Purge and Trap Solid

Notes:

1) This laboratory offers commercial testing service.

Approved By:_____ Date: January 30, 2013

R. Douglas Leonard
Chief Technical Officer

Re-issued: 1/30/13