GRAVITEC SYSTEMS INC™
21291 Urdahl Road NW
Poulsbo, WA 98370
1 800 755 8455 WWW.GRAVITEC.COM

INSPECTION FORM—FALL ARRESTOR

The equipment illustrated may not be exactly the same as the equipment you are inspecting. Know your equipment and refer to manufacturer instructions for specific inspection requirements.

USER _____ MODEL _____ SERIAL # _____

TYPE OF SRL ☐ Manual | ☐ Manual w/ integral EAL | ☐ Automatic | ☐ Automatic w/ integral EAL

		Pass	Fail	Watch
1. HOUSING				
a.	Rope Tunnel (body)	☐	☐	☐
b.	Locking Cam/Mechanism	☐	☐	☐
c.	Connecting D-ring	☐	☐	☐
d.	Evidence of Damage	☐	☐	☐
e.	Function Test	☐	☐	☐
2. LANYARD WEBBING (if present)				
a.	Termination to FA	☐	☐	☐
b.	Termination (stitch or splice)	☐	☐	☐
c.	Webbing Length	☐	☐	☐
d.	Termination to EA (stitch or splice)	☐	☐	☐
3. ENERGY ABSORBER (if present)				
a.	Integrity of Cover	☐	☐	☐
b.	Signs of Deployment	☐	☐	☐
c.	Impact Indicator	☐	☐	☐
d.	Lanyard or PEA Length	☐	☐	☐
4. CONNECTORS & D-RING(S)				
a.	Function of Connector Gate & Lock	☐	☐	☐
b.	Signs of Deformity	☐	☐	☐
c.	Body of Hook	☐	☐	☐
d.	Physical Damage (corrosion, pitting, nicks, etc.)	☐	☐	☐
5. LABELS & MARKINGS				
a.	Legible Label	☐	☐	☐
b.	ANSI/CSA (indicate #)	☐	☐	☐
c.	Age (years)			

Competent Inspector _____

Date _____

NOTES

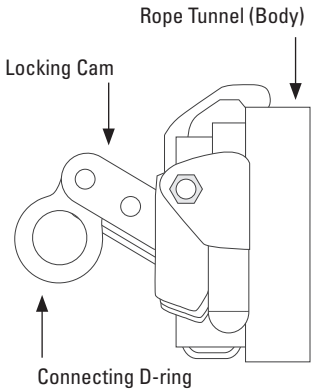

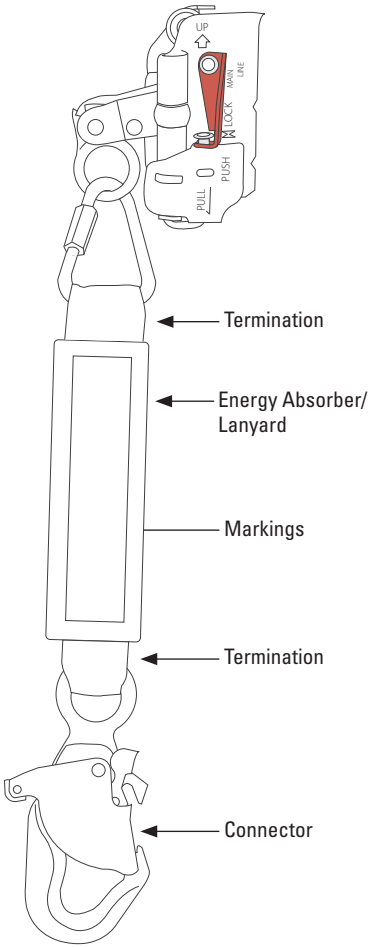

 COPYRIGHT ©2016 GRAVITEC SYSTEMS, INC. ALL RIGHTS RESERVED