Consumer Confidence Report 2016

Diego Garcia Water Systems

- FOR OFFICIAL USE ONLY -

This document is subject to the Privacy Act of 1974.
Contents shall not be disclosed, discussed, or shared unless there is a direct need-to-know in the performance of recipient's official duties.

FOREWORD

U.S. Navy Support Facility Diego Garcia (NAVSUPPFAC) is committed to providing the Diego Garcia community and transient units with safe and dependable water that meets or exceeds the Diego Garcia Final Governing Standards and Commander, Navy Installations Command Instruction (CNICINST) 5090.1. The latter applies most of the U.S. Safe Drinking Water Act (SDWA) requirements to all U.S. Navy installations overseas. In accordance with these regulations, system users are entitled to know what is in their drinking water and where it comes from.

This Consumer Confidence Report (CCR) provides NAVSUPPFAC, as the supplier, an opportunity to educate consumers about the sources and quality of their drinking water and involve each consumer in decisions about it. Educated consumers are more likely to help protect drinking water sources and understand operations of the treatment facilities that make our drinking water safe.

The Diego Garcia CCR is published annually per Navy policy. The 2016 CCR is based on monitoring data collected for water supplied by Diego Garcia water systems in calendar year 2015 and the latest round of required sampling. It includes basic information on the source of Diego Garcia water, the levels of any contaminants detected in the water, and compliance with the drinking water standards.

C. M. SNYDER
Captain, U.S. Navy
Commanding Officer
Navy Support Facility
Diego Garcia

TABLE OF CONTENTS

Diego Garcia	1
Overseas Drinking Water Program	1
Source of Water	2
Water Production and Treatment Process	3
Simplified Diagrams (Water Production & Treatment Process)	4
Water Distribution Systems	5
Water Quality Monitoring	5
Total Trihalomethanes (TTHM) and Haloacetic Acids (HAA5)	7
Other Potential Contaminants	7
Concerns and Point of Contacts	8

Appendix A - NAVSUPPFAC Water Quality Data 2015

DIEGO GARCIA

The island of Diego Garcia is one of the more than 50 islands in the Chagos Archipelago, a 22,000 square-mile area known as the Great Chagos Bank. Diego Garcia is located approximately 1,200 miles south of the southern tip of India and is the largest and southernmost island in the Chagos Archipelago.

The horseshoe-shaped coral atoll is approximately 40 miles in length and encloses a lagoon approximately 48 square miles in area. The atoll is approximately 10.5 square miles with an average elevation of six to eight feet above mean sea level.

Diego Garcia is administered by the British Indian Ocean Territory (BIOT). The eastern half of the atoll is an undeveloped nature reserve, while the western half is used by various military units, with the U.S. Navy Support Facility (NAVSUPPFAC) Diego Garcia serving as the host command under an agreement with the United Kingdom of Great Britain and Northern Ireland.

OVERSEAS DRINKING WATER (ODW) PROGRAM

U.S. Navy activities located overseas are required to manage their drinking water systems to provide drinking water that meets or exceeds U.S. drinking water quality standards. In February 2013, CNICINST 5090.1, U.S. Drinking Water Quality Standards for U.S. Navy Installations Overseas, adopted most National Primary Drinking Water Regulations (40 CFR 141) promulgated under the U.S. Safe Drinking Water Act (SDWA) of 1974.

NAVSUPPFAC Diego Garcia is currently taking steps to meet the new requirements of the Navy's Overseas Drinking Water (ODW) Program. Specific measures include projects, either already implemented, on-going, or planned, are discussed throughout this CCR. The Regional Water Quality Board (RWQB), by recommendation of the Water Quality Oversight Council (WQOC), granted Diego Garcia a Conditional Certification to Operate (CTO) its water systems. Diego Garcia will not receive a Full CTO until all significant deficiencies identified during the latest Sanitary Survey (April 2014) are corrected. All deficiencies have either been corrected or are in the process of being corrected.

Per CNICINST 5090.1, the NAVSUPPFAC Installation Water Quality Board (IWQB) was established to implement and comply with the Navy policy on Drinking Water Quality Standards and communicate drinking water quality issues to the RWQB and the WQOC. The IWQB is under the chairmanship of the NAVSUPPFAC Commanding Officer and consists of key installation personnel responsible for the production and quality monitoring of safe drinking water, and compliance monitoring with the Navy’s ODW standards.

DIEGO GARCIA FINAL GOVERNING STANDARD (DGFGS)

The Diego Garcia Final Governing Standards (DGFGS) sets out the implementation guidance, procedures and standards for environmental compliance of U.S. military operations based in Diego Garcia. Environmental laws and regulations of the host nation (BIOT/United Kingdom) are also incorporated in the development of DGFGS.

DGFGS Chapter 3, Drinking Water and CNICINST 5090.1, which extended most of the U.S. Safe Drinking Water Act provisions overseas, established the criteria for providing fit for human consumption (FFHC) water in Diego Garcia. FFHC was formerly referred to as “potable” water. DGFGS and CNICINST 5090.1 set standards for levels of contaminants in drinking water that may have adverse effect on human health, provide monitoring or testing requirements such as: quantity and frequency of analyses and specific procedures for treatment and production of drinking water. Public notification requirements when water systems are out of compliance are also detailed.

CNICINST 5090.1 imposes additional requirements to the DGFGS. However, in all cases the more stringent requirements take precedence. A review and update of DGFGS to incorporate all CNICINST 5090.1 requirements is anticipated in the next year.

SOURCE OF WATER

Five aquifers provide a stable water supply for Diego Garcia. They are located at the Downtown (Cantonment), Air Operations (Air-Ops), Industrial Site (I-Site) South, Transmitter Site (T-Site) and GEODSS.

These aquifers are classified as “Groundwater Under the Direct Influence of Surface Water” (GWUDISW) because of their shallow nature and being susceptible to contamination from surface runoff percolating through the ground. A water system is installed at or near each aquifer to extract, treat and distribute water.

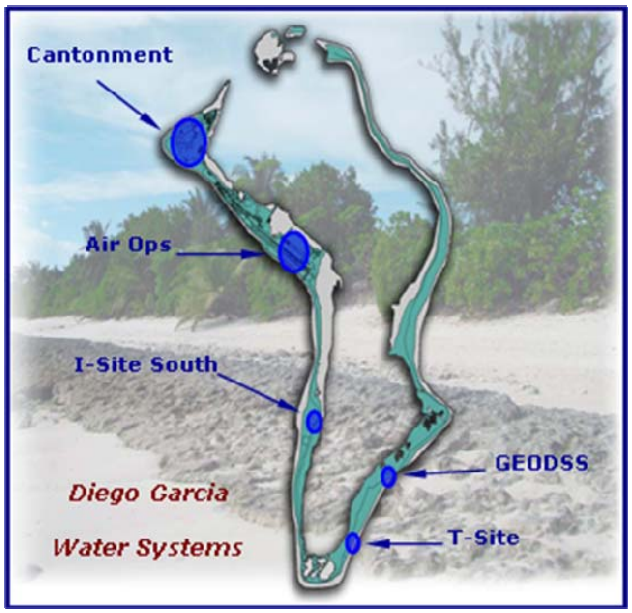

WATER PRODUCTION AND TREATMENT PROCESS

Groundwater from aquifers is extracted and collected using shallow production wells and tanks. It is aerated to remove hydrogen sulfide gas, disinfected with chlorine gas or hypochlorite solution, and supplied to the distribution systems as non-fit for human consumption (non-FFHC) tap water.

Additionally, groundwater is processed through granulated activated carbon (GAC) filters at the Air Ops Water Treatment Plant to decrease the level of organic compounds and remove Dieldrin, the termicide used to prevent termite damage to underground power cables during construction activities in the early 1970's. Dieldrin was later on included in the EPA Listing of Carcinogens (or cancer-causing chemicals) in July 1980. There has been no detection of Dieldrin in FFHC and non-FFHC waters. The use of GAC filters is a precautionary measure to protect public health.

Nanofiltration system at Air Ops Water Treatment Plant

Diego Garcia's drinking water is produced through nanofiltration systems that removed organic content in the groundwater. These organic compounds react with chlorine during the disinfection process and form the Total Trihalomethanes (TTHM) and Haloacetic Acids (HAA5).

The nanofiltration systems are installed at both the Cantonment and Air Ops Water Treatment Plants – one unit at the Cantonment and four units at the Air Ops. Three of the four units at Air Ops (installed in 2013) strictly support the operations at the Wharf area.

Diego Garcia's drinking water, processed through the nanofiltration systems, is simply called containerized or "DG-bottled water".

A Military Construction project (MILCON P-184), to treat and distribute drinking water through pipelines from Cantonment to Thunder Cove, is in-progress. The new water treatment facility will be able to meet treatment and production drinking water requirements of DGFGS and CNICINST 5090.1. The new water treatment facility will produce FFHC water that meets both DGFGS and CNICINST 5090.1 standards. Conversion of the distribution system from non-FFHC to FFHC, will eliminate the trucking of water to consumers reduce the level of vulnerability of drinking water to contaminants, and allow people to drink from the tap after approval by the appropriate Navy authority. Drinking water will be trucked to the remote sites, namely: GEODSS, I-Site South and T-Site.

New Water Treatment Plant being built at the back of Cantonment Water Treatment Plant

SIMPLIFIED DIAGRAMS (WATER PRODUCTION AND TREATMENT PROCESS)

Existing Cantonment Water Treatment Plant

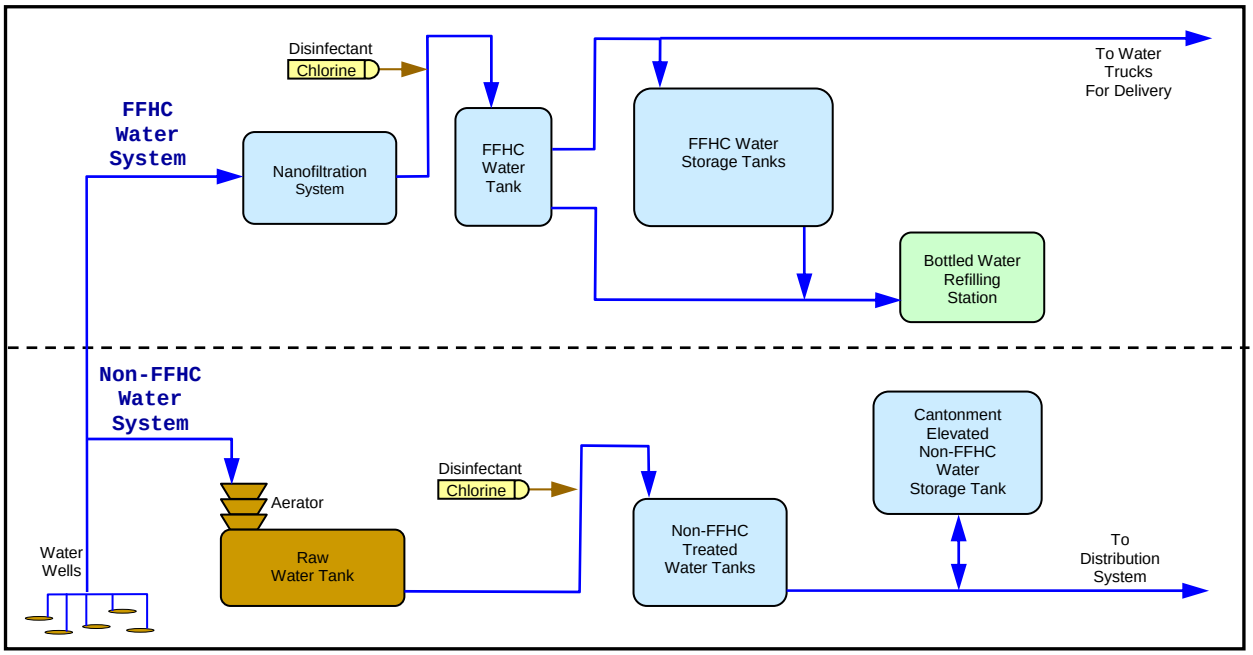

Existing Air-Ops Water Treatment Plant

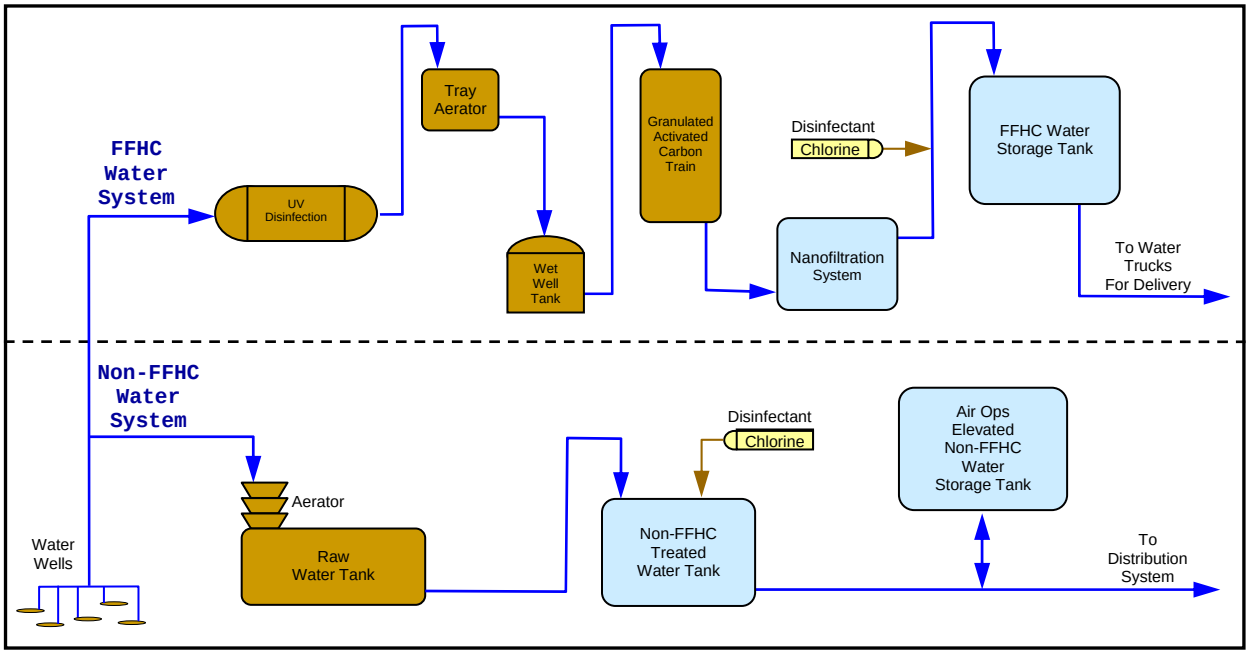

WATER DISTRIBUTION SYSTEMS

The Cantonment and Air-Ops water distribution systems are interconnected. They service the following areas: Cantonment, Receiver Site (R-Site), Splendidville, Communications Site (C-Site), Palmsville, Seabreeze Village, Industrial Site (I-Site) North, Contractor's Yard, Harbor Ops, Supply Site (S-Site), Alpha Site, Air Ops, Pacific Air Force (PACAF) and Thunder Cove. The I-Site South, T-Site and GEODSS are stand-alone tap water systems that service their respective areas mainly for industrial purposes.

Public Works Department (PWD) Diego Garcia oversees Diego Garcia water systems through a Base Operating Support (BOS) contract that operates and maintains the water systems and provides services for water distribution.

Water tank truck delivers drinking water to consumers.

Tap (non-FFHC) water is distributed thru pipes from water treatment plants to various facilities. FFHC or "DG-bottled water" is trucked and delivered throughout the island, to locations such as: residential areas, offices, base gym, air passenger terminal and all dining facilities.

WATER QUALITY MONITORING

Diego Garcia Water Systems must comply with DGFGS Chapter 3: Drinking Water and CNICINST 5090.1. Both standards require testing of drinking water for contaminants on a regular basis to protect the consumer's public health and safety. Below is a list of some of the routine sampling conducted to monitor levels of potential contaminants in the water.

Group	Potential Contaminants	Frequency of Sampling
Microorganisms	Bacteria	Monthly
Disinfectants	Residual Chlorine	Hourly, Daily, Monthly
Disinfection Byproducts	Total Trihalomethanes, Haloacetic Acids	Quarterly
Inorganic Chemicals	Metals	Annually
Organic Chemicals	Synthetic (Volatile and Pesticides)	Every 3 years
	Dieldrin	Quarterly, Annually
Radionuclides	Alpha/Beta particles, Radium, Uranium	Every 4 years

BOS Contractor provides on-site laboratory services.

The Water Annex of Centerra-Parsons Pacific LLC (BOS Contractor), regularly performs water quality testing for bacteria and distribution system disinfectant residual for both FFHC and non-FFHC water. Maintaining a disinfectant residual in the water protects against any microbial contamination. Required water samples for other potential contaminants are sent to U.S. Army Public Health Command Region-Pacific at Camp Zama, Japan for analysis. The Army Laboratory is accredited by American National Standards Institute – American Society of Quality (ANSI-ASQ) National Accreditation Board for ISO 17025: General requirements for the competence of testing and calibration laboratories.

The Navy Branch Health Clinic also performs regular independent health and sanitation inspections on DG water systems and facilities. Any discrepancies found are immediately reported to PWD and facility operators for corrective and preventive actions.

In 2015, over 17,000 tests were conducted to monitor DG's water quality. **The same level of safe drinking water testing and monitoring was performed for both Diego Garcia's "DG-bottled water" and for the tap water.** A comprehensive summary of the water quality monitoring results is provided in "Water Quality Data 2015" which is included in this report.

Based on test results, the **tap (non-FFHC) water meets all DGFGS and CNICINST 5090.1 water quality requirements except for TTHM and HAA5**. These organic-based contaminants are by-products of disinfection with chlorine. This process is explained further in the next section of this report.

All distribution lines and fixtures for tap water are presently marked, "Not suitable for drinking due to high Total Trihalomethanes". This posted consumer warning is in addition to regular public notification campaigns through TV, radio, printed media, newcomer's indoctrination and various briefings which are used to ensure all personnel know to only consume FFHC water or "DG-bottled water".

These warnings do not include HAA5. However, the same level of monitoring is conducted for TTHM and HAA5 and both are included in public notification campaigns.

A typical 500-gallon capacity fiberglass tank or "water buffalo" used in the distribution of drinking water

The Diego Garcia FFHC/drinking water or "DG-bottled water" fully meets the DGFGS and CNICINST 5090.1 for water quality compliance requirements for safe drinking water including the required levels for TTHM and HAA5.

TOTAL TRIHALOMETHANES (TTHM) and HALOACETIC ACIDS (HAA5)

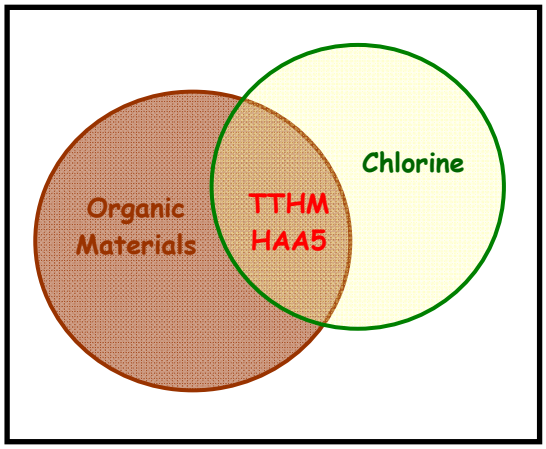

TTHM and HAA5 are groups of chemicals formed when the naturally-occurring organic materials in raw water reacts with the chlorine which is added as disinfectant. DGFGS and CNICINST 5090.1 water quality standards set the maximum contaminant level (MCL) for TTHM and HAA5 at 80 and 60 micrograms per liter, respectively.

The source of organic materials in raw water is thought to be rainwater percolating through decaying vegetation.

Potential health effects from exposure to TTHM and HAA5 depend on a variety of factors, including concentration of the chemicals, and duration and frequency of exposure. According to the U.S. Environmental Protection Agency (EPA) (***https://www.epa.gov/your-drinking-water/table-regulated-drinking-water-contaminants#Byproducts***), some people who drink water containing TTHMs in excess of the MCL over many years may experience liver, kidney, or central nervous system problems and increased risk of cancer.

OTHER POTENTIAL CONTAMINANTS

As water travels over the surface of the land or through the ground, it dissolves naturally-occurring minerals. It can also pick up other substances resulting from the presence of animals or human activity. Diego Garcia water systems may reasonably produce water containing at least trace amounts of some contaminants. However, the presence of these contaminants does not necessarily indicate that water poses a health risk. For more information about contaminants and potential health effects, please visit the U.S. EPA website: **https://www.epa.gov/your-drinking-water/table-regulated-drinking-water-contaminants.**

A typical raw water module at Cantonment

PRECAUTIONARY MEASURES

The risks of TTHM and HAA5 exposure are high from direct ingestion, therefore personnel in Diego Garcia are continually and strongly advised to continue to drink and prepare food or cook only with "DG-bottled" water.

Personnel may also be exposed to TTHM and HAA5 from tap water when showering, bathing, or working in an environment that produces large volumes of water vapor. TTHM and HAA5 may be absorbed through the skin from direct contact or may be inhaled with the water vapor generated by such activities. Exposures from the elevated TTHM and HAA5 levels in the non-FFHC tap water supply can be minimized by:

- *Limiting the length of showers & baths;*
- *Using cold water or lowering the water temperature when showering or bathing;*
- *Using an exhaust fan to remove water vapor from indoor air whenever or wherever it may accumulate; and*
- *Restricting the total amount of time spent in a work environment where you could potentially be exposed to TTHM and HAA5.*

Sampling and Risk Assessment, done in 2006, recommended short and long term actions to reduce TTHM exposure and health risks. Since then, various projects were completed such as increasing ventilation air flow rates in shower stalls and reducing shower head water flow rates.

Additional information on TTHM and HAA5 in drinking water is available online: ***https://safewater.zendesk.com/hc/en-us/sections/203309148-Disinfection-Byproducts***

CONCERNS AND POINT OF CONTACTS

For questions and additional information, please contact PWD Environmental at:

Email Addresses: ***Linda.Corpus.RP@fe.navy.mil***
Francis.DeLuna.RP@fe.navy.mil

Telephone Numbers: ***370-4542/4540***

U.S. Navy Support Facility Diego Garcia

Water Quality Data 2015

The following tables list substances which were detected during sampling performed in calendar year 2015 and the latest round of required sampling. Water samples were collected from the sources, distribution systems, nanofiltration systems and water stations, and analyzed using the parameters and methods required by U.S. National Primary Drinking Water Regulations (40 CFR 141) either on-island by BOS Contractor (Centerra-Parsons Pacific LLC.), or off-island by U.S. Army Public Health Command Region-Pacific at Camp Zama, Japan. The presence of substances does not necessarily indicate that the water poses a health risk. Information about contaminants and potential health effects are available at U.S. EPA's Drinking Water Standards website: **https://www.epa.gov/your-drinking-water/table-regulated-drinking-water-contaminants**

Table I	**FFHC or Drinking Water produced from Cantonment and Air-Ops Nanofiltration Systems**
Table II	**FFHC or Drinking Water delivered from either Cantonment or Air-Ops Nanofiltration Systems**
Table III	**FFHC or Drinking Water produced from Air-Ops Nanofiltration System in Support of Waterfront Demands**
Table IV	**FFHC or Drinking Water delivered from Air-Ops Nanofiltration System in Support of Waterfront Demands**
Table V	**Non-FFHC or Tap Water produced from Cantonment and Air-Ops Water Treatment Systems**
Table VI	**Non-FFHC or Tap Water supplied to Combined Cantonment and Air-Ops Distribution Systems**
Table VII	**Non-FFHC or Tap Water produced from I-Site South, T-Site and GEODSS Water Treatment Systems**
Table VIII	**Non-FFHC or Tap Water supplied to I-Site South, T-Site and GEODSS Distribution Systems**

Table Definitions (based on U.S. EPA):

AL **Action Level.** The concentration of a contaminant which, if exceeded, triggers treatment or other requirements which a water system must follow.

MCL **Maximum Contaminant Level.** The highest level of a contaminant that is allowed in drinking water. MCLs are set as close to MCLGs as feasible using the best available treatment technology.

MCLG **Maximum Contaminant Level Goal.** The level of a contaminant in drinking water below which there is no known or expected risk to health. MCLGs allow for a margin of safety.

MRDL **Maximum Residual Disinfectant Level.** The highest level of a disinfectant allowed in drinking water. There is convincing evidence that addition of a disinfectant is necessary for control of microbial contaminants.

MRDLG **Maximum Residual Disinfectant Level Goal.** The level of a drinking water disinfectant below which there is no known or expected risk to health. MRDLGs do not reflect the benefits of the use of disinfectants to control microbial contamination.

Table Abbreviations:

ppb	parts per billion or micrograms per liter
ppm	parts per million or milligrams per liter
pCi/L	picocuries per liter
<	less than
ND	Not Detected
N/A	Not Applicable

Table I. FFHC or Drinking Water produced from Cantonment and Air-Ops Nanofiltration Systems

Substances[1]	Unit of Measurement	Cantonment	Air-Ops	Sample Date	Regulated Levels (DGFGS and CNICINST 5090.1)	Common Sources
Microorganisms						
Total Coliform (including fecal coliform and *E. Coli*)	positive samples per month	0	0	2015	MCLG = zero MCL = 5% of total samples	Coliforms are naturally present in the environment; as well as feces; fecal coliforms and *E. Coli* only come from human and animal fecal waste.
Organic Chemicals[2]						
Xylene (total)	ppm	ND	0.0008	2013	MCLG = 10 MCL = 10	Discharge from petroleum and chemical factories
Inorganic Chemicals						
Barium	ppm	ND	0.0016	2015	MCLG = 2.0 MCL = 2.0	Discharge of drilling wastes; discharge from metal refineries; erosion of natural deposits
Nickel[3]	ppm	0.00071	0.00068	2015	MCL = 0.1	Leaching from metals in contact with drinking water; Dissolution from nickel ore-bearing rocks
Sodium[4]	ppm	9.1	7.5	2015	---	---
Fluoride	ppm	0.078	0.18	2015	MCLG = 4.0 MCL = 4.0	Water additive which promotes strong teeth; erosion of natural deposits; discharge from fertilizer and aluminum factories
Nitrate (measured as Nitrogen)	ppm	0.4	0.1	2015	MCLG = 10 MCL = 10	Runoff from fertilizer use; leaking from septic tanks, sewage; erosion of natural deposits
Nitrite (measured as Nitrogen)	ppm	<0.001	<0.001	2015	MCLG = 1 MCL = 1	
Radionuclides[5]						
Gross Alpha (Alpha Particles)	pCi/L	<0.71	<0.77	2013-2014	MCLG = zero MCL = 15	Erosion of natural deposits of certain minerals that are radioactive and may emit a form of radiation known as alpha radiation
Gross Beta (Beta Particles and Photon Emitters)	millirems per year	<0.82	1.6	2013-2014	MCLG = zero MCL = 4	Decay of natural and man-made deposits of certain minerals that are radioactive and may emit forms of radiation known as photons and beta radiation
Radium 226 and Radium 228 (Combined)	pCi/L	<0.506	<0.523	2013-2014	MCLG = zero MCL = 5	Erosion of natural deposits
Uranium	ppb	<0.10	<0.10		MCLG = zero MCL = 30	Erosion of natural deposits

Notes:
1) *Only substances detected during sampling performed in calendar year 2015 and the latest round of required sampling are listed.*
2) *Required frequency of sampling & testing for Organic Chemicals is once every 3 years.*
3) *MCL for Nickel based on DGFGS only. EPA promulgated an MCL and MCLG of 0.1 ppm for nickel in 1992. However, these were remanded (suspended) in 1995. All other rules pertaining to nickel, including monitoring requirements and best available treatment technology development, remain in effect.*
4) *Sodium has no established MCL. Monitoring is required so concentration levels can be made available on request.*
5) *Required frequency of sampling & testing for Radionuclides is once every 4 years.*

Table II. FFHC or Drinking Water delivered from either Cantonment or Air-Ops Nanofiltration Systems

Substances	Unit of Measurement	Average Level Detected	Range of Detection	Sample Date	Regulated Levels (DGFGS and CNICINST 5090.1)	Common Sources
Disinfectants						
Residual Chlorine	ppm	1.0	0.2 - 3.0	2015	MRDLG = 4 MRDL = 4.0	Water additive used to control microbes
Disinfection Byproduct						
Total Trihalomethanes (TTHMs)	ppb	14.0	3.0 – 43.2	2015	MCLG = N/A MCL = 80	Byproduct of drinking water disinfection
Haloacetic Acids (HAA5)	ppb	8.3	<6.0 – 18.0	2015	MCLG = N/A MCL = 60	Byproduct of drinking water disinfection
Inorganic Chemicals						
Lead	ppm	0.0014	<0.0010 – 0.0036	2015	MCLG = zero AL = 0.015	Corrosion of household plumbing systems; erosion of natural deposits
Copper	ppm	0.12	<0.050 – 0.42	2015	MCLG = 1.3 AL = 1.3	Corrosion of household plumbing systems; erosion of natural deposits

Table III. FFHC or Drinking Water produced from Air-Ops Nanofiltration System in Support of Waterfront Demands

Substances[1]	Unit of Measurement	Result	Sample Date	Regulated Levels (DGFGS and CNICINST 5090.1)	Common Sources
Microorganisms					
Total Coliform (including fecal coliform and *E. Coli*)	positive samples per month	0	2015	MCLG = zero MCL = 5% of total samples	Coliforms are naturally present in the environment; as well as feces; fecal coliforms and *E. coli* only come from human and animal fecal waste.
Organic Chemicals[2]					
Xylene (total)	ppm	0.0024	2013	MCLG = 10 MCL = 10	Discharge from petroleum and chemical factories
Inorganic Chemicals					
Barium	ppm	0.041	2015	MCLG = 2 MCL = 2	Discharge of drilling waste; discharge from metal refineries; erosion of natural deposits
Nickel[3]	ppm	0.00056	2015	MCL = 0.1	Leaching from metals in contact with drinking water; Dissolution from nickel ore-bearing rocks
Sodium[4]	ppm	35	2015	---	---
Fluoride	ppm	0.12	2015	MCLG = 4.0 MCL = 4.0	Water additive which promotes strong teeth; erosion of natural deposits; discharge from fertilizer and aluminum factories
Nitrate (measured as Nitrogen)	ppm	0.2	2015	MCLG = 10 MCL = 10	Runoff from fertilizer use; leaking from septic tanks; sewage; erosion of natural deposits
Nitrite (measured as Nitrogen)	ppm	<0.001	2015	MCLG = 1 MCL = 1	
Radionuclides[5]					
Gross Alpha (Alpha Particles)	pCi/L	<0.63	2013-2014	MCLG = zero MCL = 15	Erosion of natural deposits of certain minerals that are radioactive and may emit a form of radiation known as alpha radiation
Gross Beta (Beta Particles and Photon Emitters)	millirems per year	1.6	2013-2014	MCLG = zero MCL = 4	Decay of natural and man-made deposits of certain minerals that are radioactive and may emit forms of radiation known as photons and beta radiation
Radium 226 and Radium 228 (Combined)	pCi/L	<0.477	2013-2014	MCLG = zero MCL = 5	Erosion of natural deposits
Uranium	ppb	<0.10	2013-2014	MCLG = zero MCL = 30	Erosion of natural deposits

Notes:
1) *Only substances detected during sampling performed in calendar year 2015 and the latest round of required sampling are listed.*
2) *Required frequency of sampling & testing for Organic Chemicals is once every 3 years.*
3) *MCL for Nickel based on DGFGS only. EPA promulgated an MCL and MCLG of 0.1 ppm for nickel in 1992. However, these were remanded (suspended) in 1995. All other rules pertaining to nickel, including monitoring requirements and best available treatment technology development, remain in effect.*
4) *Sodium has no established MCL. Monitoring is required so concentration levels can be made available on request.*
5) *Required frequency of sampling & testing for Radionuclides is once every 4 years.*

Table IV. FFHC or Drinking Water delivered from Air-Ops Nanofiltration System in Support of Waterfront Demands

Substances	Unit of Measurement	Average Level Detected	Range of Detection	Sample Date	Regulated Levels (DGFGS and CNICINST 5090.1)	Common Sources
Disinfectants						
Residual Chlorine	ppm	1.2	0.5 – 2.5	2015	MRDLG = 4 MRDL = 4.0	Water additive used to control microbes
Disinfection Byproduct						
Total Trihalomethanes (TTHMs)	ppb	47.3	36.5 – 59.4	2015	MCLG = N/A MCL = 80	Byproduct of drinking water disinfection
Haloacetic Acids (HAA5)	ppb	21.8	<6.0 – 35.2	2015	MCLG = N/A MCL = 60	Byproduct of drinking water disinfection
Inorganic Chemicals						
Lead	ppm	0.0110	0.0110	2015	MCLG = zero AL = 0.015	Corrosion of household plumbing systems; erosion of natural deposits
Copper	ppm	<0.050	<0.050	2015	MCLG = 1.3 AL = 1.3	Corrosion of household plumbing systems; erosion of natural deposits

Table V. Non-FFHC or Tap Water produced from Cantonment and Air-Ops Water Treatment Systems

Substances[1]	Unit of Measurement	Cantonment	Air Ops	Sample Date	Regulated Levels (DGFGS and CNICINST 5090.1)	Common Sources
Microorganisms						
Total Coliform (including fecal coliform and *E. Coli*)	positive samples per month	0	0	2015	MCLG = zero MCL = 5% of total samples	Coliforms are naturally present in the environment; as well as feces; fecal coliforms and *E. coli* only come from human and animal fecal waste.
Organic Chemicals[2]						
Hexachlorocyclopentadiene	ppm	0.00011	ND	2013	MCLG = 0.05 MCL = 0.05	Discharge from chemical factories
Dalapon	ppm	0.005	ND	2013	MCLG = 0.2 MCL = 0.2	Runoff from herbicide used on rights of way
Inorganic Chemicals						
Arsenic	ppm	0.00046	0.00088	2015	MCLG = 0 MCL = 0.010	Erosion of natural deposits; runoff from orchards, runoff from glass and electronics production wastes
Barium	ppm	0.0027	0.0019	2015	MCLG = 2 MCL = 2	Discharge of drilling waste; discharge from metal refineries; erosion of natural deposits
Chromium	ppm	0.0011	0.0016	2015	MCLG = 0.1 MCL = 0.1	Discharge from steel and pulp mills; erosion of natural deposits
Nickel[3]	ppm	0.0023	0.0018	2015	MCL = 0.1	Leaching from metals in contact with drinking water; Dissolution from nickel ore-bearing rocks
Selenium	ppm	ND	0.0014	2015	MCLG = 0.05 MCL = 0.05	Discharge from petroleum refineries; erosion of natural deposits; discharge from mines
Sodium[4]	ppm	39	150	2015	---	---
Fluoride	ppm	0.36	0.59	2015	MCLG = 4.0 MCL = 4.0	Water additive which promotes strong teeth; erosion of natural deposits; discharge from fertilizer and aluminum factories
Nitrate (measured as Nitrogen)	ppm	0.5	<0.1	2015	MCLG = 10 MCL = 10	Runoff from fertilizer use; leaching from septic tanks, sewage; erosion of natural deposits
Nitrite (measured as Nitrogen)	ppm	0.001	<0.001	2015	MCLG = 1 MCL = 1	
Radionuclides[5]						
Gross Alpha (Alpha Particles)	pCi/L	<3.8	<4.4	2013-2014	MCLG = zero MCL = 15	Erosion of natural deposits of certain minerals that are radioactive and may emit a form of radiation known as alpha radiation
Gross Beta (Beta Particles and Photon Emitters)	millirems per year	<4.1	<4.5	2013-2014	MCLG = zero MCL = 4	Decay of natural and man-made deposits of certain minerals that are radioactive and may emit forms of radiation known as photons and beta radiation
Radium 226 and Radium 228 (Combined)	pCi/L	<0.623	<0.480	2013-2014	MCLG = zero MCL = 5	Erosion of natural deposits
Uranium	ppb	0.13	0.23	2013-2014	MCLG = zero MCL = 30	Erosion of natural deposits

Notes:
1) *Only substances detected during sampling performed in calendar year 2015 and the latest round of required sampling are listed.*
2) *Required frequency of sampling & testing for Organic Chemicals is once every 3 years.*
3) *MCL for Nickel based on DGFGS only. EPA promulgated an MCL and MCLG of 0.1 ppm for nickel in 1992. However, these were remanded (suspended) in 1995. All other rules pertaining to nickel, including monitoring requirements and best available treatment technology development, remain in effect.*
4) *Sodium has no established MCL. Monitoring is required so concentration levels can be made available on request.*
5) *Required frequency of sampling & testing for Radionuclides is once every 4 years.*

Table VI. Non-FFHC or Tap Water supplied to Combined Cantonment and Air-Ops Distribution Systems

Substances	Unit of Measurement	Average Level Detected	Range of Detection	Sample Date	Regulated Levels (DGFGS and CNICINST 5090.1)	Common Sources
Disinfectants						
Residual Chlorine	ppm	1.1	0.2 – 3.0	2015	MRDLG = 4 MRDL = 4.0	Water additive used to control microbes
Disinfection Byproduct						
Total Trihalomethanes (TTHMs)	**ppb**	**419**	**40.0 – 619**	**2015**	**MCLG = N/A MCL = 80**	**Byproduct of drinking water disinfection**
Haloacetic Acids (HAA5)	**ppb**	**414**	**55.0 – 610**	**2015**	**MCLG = N/A MCL = 60**	**Byproduct of drinking water disinfection**
Inorganic Chemicals						
Lead	ppm	0.0034	0.0019 – 0.0049	2015	MCLG = zero AL = 0.015	Corrosion of household plumbing systems; erosion of natural deposits
Copper	ppm	0.675	<0.50 - 1.9	2015	MCLG = 1.3 AL = 1.3	Corrosion of household plumbing systems; erosion of natural deposits

Table VII. Non-FFHC or Tap Water produced from I-Site South, T-Site and GEODSS Water Treatment Systems

Substances[1]	Unit of Measurement	I-Site South	T-Site	GEODSS	Sample Date	Regulated Levels (DGFGS and CNICINST 5090.1)	Common Sources
Microorganisms							
Total Coliform (including fecal coliform and *E. Coli*)	positive samples per month	0	0	0	2015	MCLG = zero MCL = 5% of total samples	Coliforms are naturally present in the environment; as well as feces; fecal coliforms and *E. coli* only come from human and animal fecal waste.
Inorganic Chemicals							
Arsenic	ppm	0.00087	0.0033	0.00096	2015	MCLG = zero MCL = 0.01	Erosion of natural deposits; runoff from orchards, runoff from glass & electronics production wastes
Barium	ppm	0.0027	0.0027	0.0014	2015	MCLG = 2 MCL = 2	Discharge of drilling waste; discharge from metal refineries; erosion of natural deposits
Chromium	ppm	0.0018	0.0011	0.0013	2015	MCLG = 0.1 MCL = 0.1	Discharge from steel and pulp mills; erosion of natural deposits
Nickel[2]	ppm	0.0023	0.0018	0.0017	2015	MCL = 0.1	Leaching from metals in contact with drinking water; Dissolution from nickel ore-bearing rocks
Selenium	ppm	0.0020	ND	ND	2015	MCLG = 0.05 MCL = 0.05	Discharge from petroleum refineries; erosion of natural deposits; discharge from mines
Sodium[3]	ppm	150	49	46	2015	---	---
Fluoride	ppm	0.62	0.38	0.69	2015	MCLG = 4.0 MCL = 4.0	Water additive which promotes strong teeth; erosion of natural deposits; discharge from fertilizer and aluminum factories
Nitrate (measured as Nitrogen)	ppm	0.8	0.3	<0.1	2015	MCLG = 10 MCL = 10	Runoff from fertilizer use; leaching from septic tanks, sewage; erosion of natural deposits
Nitrite (measured as Nitrogen)	ppm	<0.001	<0.001	<0.001	2015	MCLG = 1 MCL = 1	
Radionuclides[4]							
Gross Alpha (Alpha Particles)	pCi/L	<5.1	<2.9	<2.3	2013-2014	MCLG = zero MCL = 15	Erosion of natural deposits of certain minerals that are radioactive and may emit a form of radiation known as alpha radiation
Gross Beta (Beta Particles and Photon Emitters)	millirems per year	8.5	<3.1	2.4	2013-2014	MCLG = zero MCL = 4	Decay of natural and man-made deposits of certain minerals that are radioactive and may emit forms of radiation known as photons and beta radiation
Radium 226 and Radium 228 (Combined)	pCi/L	<0.593	<0.463	<0.449	2013-2014	MCLG = zero MCL = 5	Erosion of natural deposits
Uranium	ppb	<0.10	0.21	0.51	2013-2014	MCLG = zero MCL = 30	Erosion of natural deposits

Notes:
1) *Only substances detected during sampling performed in calendar year 2015 and the latest round of required sampling are listed.*
2) *MCL for Nickel based on DGFGS only. EPA promulgated an MCL and MCLG of 0.1 ppm for nickel in 1992. However, these were remanded (suspended) in 1995. All other rules pertaining to nickel, including monitoring requirements and best available treatment technology development, remain in effect.*
3) *Sodium has no established MCL. Monitoring is required so concentration levels can be made available on request.*
4) *Required frequency of sampling & testing for Radionuclides is once every 4 years.*

Table VIII. Non-FFHC or Tap Water supplied to I-Site South, T-Site and GEODSS Distribution Systems

Substances	Unit of Measurement	I-Site South		T-Site		GEODSS		Date Sampled	Regulated Levels (DGFGS and CNICINST 5090.1)	Common Sources
		Average Level Detected	Range of Detection	Average Level Detected	Range of Detection	Average Level Detected	Range of Detection			
Disinfectants										
Residual Chlorine	ppm	1.8	0.2 – 3.0	1.7	0.8 – 3.0	1.8	0.5 – 3.0	2015	MRDLG = 4 MRDL = 4.0	Water additive used to control microbes
Disinfection Byproduct										
Total Trihalomethanes (TTHMs)	**ppb**	**646**	**610 - 699**	**178**	**161 – 196**	**70.0**	**5.8 – 122**	**2015**	**MCLG = N/A MCL = 80**	**Byproduct of drinking water disinfection**
Haloacetic Acids (HAA5)	**ppb**	**169**	**130 – 210**	**146**	**120 – 172**	**23.8**	**<6.0 – 43.0**	**2015**	**MCLG = N/A MCL = 60**	**Byproduct of drinking water disinfection**
Inorganic Chemicals										
Lead	ppm	0.0071	0.0071	0.0012	0.0012	0.0026	0.0026	2015	MCLG = zero AL = 0.015	Corrosion of household plumbing systems; erosion of natural deposits
Copper	ppm	0.71	0.71	0.20	0.20	0.13	0.13	2015	MCLG = 1.3 AL = 1.3	Corrosion of household plumbing systems; erosion of natural deposits