MILITARY SPECIFICATION

HASP, HIGH SECURITY, SHROUDED FOR SHIPBOARD DOORS AND HATCHES USING HIGH AND MEDIUM SECURITY PADLOCK, GENERAL SPECIFICATION FOR

This specification is approved for use by the Naval Sea Systems Command, Department of the Navy, and is available for use by all Departments and Agencies of the Department of Defense.

1. SCOPE

1.1 Scope. This specification covers shipboard hasps for high security padlocks.

1.2 Classification. The hasps shall be of the following styles with specific component callouts for each style in accordance with the specification sheet indicated (see table I and 6.2).

Style 1 - Hasp, high security shipboard, arrangement for left-hand or right-hand hinged doors swinging out to open.

Style 2 - Hasp, high security shipboard, arrangement for left-hand or right-hand hinged armored doors swinging out to open.

Style 3 - Hasp, high security shipboard, arrangement for watertight hatches.

Style 4 - Hasp, high security shipboard, arrangement for watertight scuttles.

Style 5 - Hasp, high security shipboard, arrangement for left-hand or right-hand hinged quick acting watertight doors swinging in to open.

Style 6 - Hasp, high security shipboard, arrangement for left-hand or right-hand hinged doors swinging in to open.

Beneficial comments (recommendations, additions, deletions) and any pertinent data which may be of use in improving this document should be addressed to: Commander, Naval Sea Systems Command, SEA 55Z3, Department of the Navy, Washington, DC 20362-5101 by using the self-addressed Standardization Document Improvement Proposal (DD Form 1426) appearing at the end of this document or by letter.

2. APPLICABLE DOCUMENTS

2.1 Government documents.

2.1.1 Specifications and standards. Unless otherwise specified, the following specifications and standards of the issue listed in that issue of the Department of Defense Index of Specifications and Standards (DoDISS) specified in the solicitation form a part of this specification to the extent specified herein.

SPECIFICATIONS

FEDERAL

QQ-S-766	- Steel Plates, Sheets, and Strip-Corrosion Resisting.
PPP-B-566	- Boxes, Folding, Paperboard.
PPP-B-601	- Boxes, Wood, Cleated-Plywood.
PPP-B-621	- Boxes, Wood, Nailed and Lock-Corner.
PPP-B-676	- Boxes, Setup.

MILITARY

MIL-C-6021	- Castings, Classification and Inspection of.
MIL-I-6866	- Inspection, Penetrant Method of.
MIL-L-10547	- Liners, Case, and Sheet, Overwrap; Water-Vaporproof or Waterproof, Flexible.
MIL-P-10971	- Pin, Spring, Tubular (Coiled and Slotted).
MIL-H-24653/1	- Hasp, High Security, Shrouded for Shipboard Doors and Hatches Using High and Medium Security Padlock, Style 1.
MIL-H-24653/2	- Hasp, High Security, Shrouded for Shipboard Doors and Hatches Using High and Medium Security Padlock, Style 2.
MIL-H-24653/3	- Hasp, High Security, Shrouded for Shipboard Doors and Hatches Using High and Medium Security Padlock, Style 3.
MIL-H-24653/4	- Hasp, High Security, Shrouded for Shipboard Doors and Hatches Using High and Medium Security Padlock, Style 4.
MIL-H-24653/5	- Hasp, High Security, Shrouded for Shipboard Doors and Hatches Using High and Medium Security Padlock, Style 5.
MIL-H-24653/6	- Hasp, High Security, Shrouded for Shipboard Doors and Hatches Using High and Medium Security Padlock, Style 6.
MIL-E-22200/2C	- Electrodes, Welding, Covered (Austenitic Chromium-Nickel Steel).

STANDARDS

FEDERAL

FED-STD-66	- Steel: Chemical Composition and Hardenability.

MILITARY

MIL-STD-105 - Sampling Procedures and Tables for Inspection by Attributes.
MIL-STD-129 - Marking for Shipment and Storage.

2.1.2 Government drawing. The following Government drawing forms a part of this specification to the extent specified herein.

DRAWING

NAVAL SEA SYSTEMS COMMAND (NAVSEA)
53711-5532337 - High Security Hasp, Shipboard, Pictorial and Parts List.

(Copies of specifications, standards and drawings required by contractors in connection with specific acquisition functions should be obtained from the contracting activity or as directed by the contracting officer.)

2.2 Other publications. The following documents form a part of this specification to the extent specified herein. The issues of the documents which are indicated as DoD adopted shall be the issue listed in the current DoDISS and the supplement thereto, if applicable.

AMERICAN NATIONAL STANDARDS INSTITUTE, INC. (ANSI)
B46.1 - Surface Texture. (DoD adopted)

(Application for copies should be addressed to the American National Standards Institute, Inc., 1430 Broadway, New York, NY 10018.)

AMERICAN SOCIETY FOR TESTING AND MATERIALS (ASTM)
A 36 - Structural Steel. (DoD adopted)
A 743 - Castings, Iron-Chromium, Iron-Chromium-Nickel, Nickel-Base, Corrosion-Resistant, for General Application. (DoD adopted)
E 10 - Brinell Hardness of Metallic Materials, Test Method for. (DoD adopted)
E 18 - Rockwell Hardness and Rockwell Superficial Hardness of Metallic Materials, Test Methods for. (DoD adopted)

(Application for copies should be addressed to the American Society for Testing and Materials, 1916 Race Street, Philadelphia, PA 19103.)

AMERICAN WELDING SOCIETY (AWS)
A5.4 - Specification for Covered Corrosion-Resisting Chromium and Chromium-Nickel Steel Welding Electrodes.

(Application for copies should be addressed to the American Welding Society, Inc., 550 NW LeJeune Road, P.O. Box 351040, Miami, FL 33135.)

SOCIETY OF AUTOMOTIVE ENGINEERS (SAE)
AS 3071A - Acceptance Criteria - Magnetic Particle, Fluorescent Penetrant, and Contrast Dye Penetrant Inspection.

(Application for copies should be addressed to the Society of Automotive Engineers, 400 Commonwealth Drive, Warrendale, PA 15096.)

NATIONAL MOTOR FREIGHT TRAFFIC ASSOCIATION, INC., AGENT
National Motor Freight Classification

(Application for copies should be addressed to the National Motor Freight Traffic Association, Inc., ATA TRAFFIC Dept., 1616 "P" Street, NW, Washington, DC 20036.)

UNIFORM CLASSIFICATION COMMITTEE AGENT
Uniform Freight Classification Ratings, Rules and Regulations

(Application for copies should be addressed to the Uniform Classification Committee Agent, Tariff Publication Officer, Room 1106, 222 South Riverside Plaza, Chicago, IL 60606.)

(Industry association specifications and standards are generally available for reference from libraries. They are also distributed among technical groups and using Federal agencies.)

2.3 Order of precedence. In the event of a conflict between the text of this specification and the references cited herein, the text of this specification shall take precedence.

3. REQUIREMENTS

3.1 Specification sheets. The individual item requirements shall be as specified herein and in accordance with the applicable specification sheet. In the event of any conflict between the requirements of this specification and the specification sheet, the latter shall govern.

3.2 First article. When specified (see 6.2), the contractor shall furnish six complete hasps of the style required for first article inspection and approval (see 4.3 and 6.3). The first article shall consist of samples and shall conform to the requirements of this specification prior to regular production.

3.2.1 Hasp components. For the purpose of this specification, a complete high security hasp style shall be an assembly of the components listed in table I and detailed on figure 1.

TABLE I. Hasp system components by style.

System components															
Style no.	Installation procedure number	Reversible cover	Hasp liner	Tang	Shackle pin for 831B lock	Shackle pin for 826C lock	Locking pins	Bolster plate	Z bracket	Hinge assy	Tang bracket	Foam installation jig	Mounting plate	Shim plate set	Spacer
1	MIL-H-24653 /1	X	X	X	2	1	2	X				X		X	
2	MIL-H-24653 /2	X	X	X	2	1	2					X		X	X
3	MIL-H-24653 /3	X	X	X	2	1	2	X			X	X			
4	MIL-H-24653 /4	X	X	X	2	1	2	X				X		X	
5	MIL-H-24653 /5	X	X	X	2	1	2		X	X		X	X	X	
6	MIL-H-24653 /6	X	X	X	2	1	2	X		X		X		X	

NOTE: X indicates one each of that part required.

3.3 Materials.

3.3.1 Castings. The castings shall conform to ASTM A 743, grade 304L. Certified metals from reputable alloy manufacturers shall be used for castings, and in no case shall the weight of the production lot exceed the weight of the purchased certified metals.

3.3.2 Foam installation jig. The installation jig shall be composed of polyethylene foam with a density of not less than 1.7 pound per cubic foot (lb/ft^3) or more than 2.0 lb/ft^3 (hot wire cut is permissible).

3.3.3 Bolster and shim plate. Material for bolster and shim plate shall be in accordance with ASTM A 36 steel.

3.3.4 Locking pin. Locking pins shall be composed of carbon steel conforming to any of the steel numbers 1070 through 1095 as specified in FED-STD-66.

3.3.5 Mounting plate. Material for the mounting plate shall be 300 series stainless steel conforming to QQ-S-766.

3.3.6 Recovered materials. Recycled and recovered raw materials should be used to the extent they are normally used in producing certified materials. Recovered/recycled iron, chromium, nickel, and molybdenum may be used in producing the basic alloy which will then be remelted to make the hasps. Sprues, gates, and runners from the casting operation may be cleaned and remelted for production use. Materials shall be as specified herein. Materials used shall be free from defects which would adversely affect the performance of individual components or the overall assembly. None of the above shall be interpreted to mean that the use of scrap 304L or used or rebuilt products will be allowed.

3.4 Mechanical properties.

3.4.1 Hardness.

3.4.1.1 Casting hardness. When tested in accordance with ASTM E 10, hardness of the cast parts shall be not less than Brinell 150.

3.4.1.2 Locking pin hardness. When tested in accordance with ASTM E 18, hardness shall be not less than Rockwell C46 and shall not exceed Rockwell C53.

3.5 Identical items. Complete hasps of the same style furnished under any specific contract shall be in accordance with this specification and shall be physically identical, within tolerances specified (see 3.1). This requirement includes all parts, assemblies, and components.

3.6 Design and construction. The hasps shall conform to the design, details, dimensions, and materials requirements specified herein and on figure 1, and applicable specification sheets.

3.6.1 Fabrication. Fabrication of the hasp shall be as specified on Drawing 53711-5532337.

3.7 Identification marking. Each hasp reversible cover shall be permanently and legibly marked in accordance with the requirements of figure 1.

3.8 Finish. The hasp surfaces shall have a uniform finish for which roughness does not exceed 125 root mean square when measured in accordance with ANSI B46.1.

3.9 Instructions. Installation instructions shall be included with each hasp based on the style of hasp (see table I).

3.10 Workmanship. Castings shall be sound and free from patching, sharp edges, cracks, voids, shrinkage, and any other defect which reduces the castings ability to perform the intended function. Dimensions shall be within tolerance specified herein and on the applicable specification sheets.

4. QUALITY ASSURANCE PROVISIONS

4.1 Responsibility for inspection. Unless otherwise specified in the contract or purchase order, the contractor is responsible for the performance of all inspection requirements as specified herein. Except as otherwise specified in the contract or purchase order, the contractor may use his own or any other facilities suitable for the performance of the inspection requirements specified herein, unless disapproved by the Government. The Government reserves the right to perform any of the inspections set forth in the specification where such inspections are deemed necessary to assure supplies and services conform to prescribed requirements.

4.2 Classification of inspection. The inspection requirements specified herein are classified as follows:

(a) First article inspection (see 4.3).
(b) Quality conformance inspection (see 4.4).

4.3 First article inspection. First article inspection shall be performed on a complete hasp style when a first article sample is required (see 3.2, 6.2 and 6.4). This inspection shall include the examination of 4.7 and the tests of 4.8 and 4.9. The first article shall be representative of the design, construction, and manufacturing technique applicable to the remaining hasps of the style to be furnished under the contract.

4.4 Quality conformance inspection. The quality conformance inspection shall consist of 100 percent visual inspection as specified in 4.7 and the tests specified in 4.8 and 4.9 performed on samples selected in accordance with 4.6.1.

4.5 Inspection lot. Units of the same style, manufactured in one production run, offered to the Government at one time, shall be considered a lot. The sample unit shall be one complete hasp style.

4.5.1 Weight of material. Hasps manufactured in one production run shall be weighed. In accordance with 3.3.1, total weight of hasps shall not exceed the weight of purchased certified metal.

4.6 Sampling. A random sample of hasps shall be selected from each lot in accordance with MIL-STD-105.

4.6.1 Sampling for tests. Tests for the hasp shall be based on inspection level S-4 of MIL-STD-105 and an acceptable quality level of 2.5 percent defective.

4.7 Examination. The first article, when furnished, and each hasp shall be examined for compliance with MIL-C-6021 and the requirements specified in section 3. Any redesign or modification of the contractor's standard product to comply with specified requirements, or any necessary redesign or modification following failure to meet specified requirements, shall receive particular attention for adequacy and suitability. This element of inspection shall encompass all visual examinations and dimensional measurements.

4.8 Tests. The first article, when required, and each sample hasp selected in accordance with 4.6.1 shall be tested to determine compliance with the specification. Tests shall be conducted as specified (see 4.8.1 and 6.4).

4.8.1 Hardness. Hardness tests shall be performed to determine compliance with 3.4.1.

4.9 Liquid penetrant inspection. Castings shall be examined by means of fluorescent liquid penetrant inspection in accordance with MIL-I-6866 using acceptance criteria of SAE AS 3071A.

4.10 Inspection of packaging. Sample packages and packs, and the inspection of the preservation-packaging, packing and marking for shipment and storage shall be in accordance with the requirements of section 5 and the documents specified therein.

5. PACKAGING

(The preparation for delivery requirements specified herein apply only for direct Government acquisition. For the extent of applicability of the preparation for delivery requirements of referenced documents listed in section 2, see 6.5.)

5.1 Preservation and packaging. The preservation and packaging shall be level A or C as specified (see 6.2).

5.1.1 Level A.

5.1.1.1 Unit packaging. Each hasp shall be unit packaged in a folding or setup paperboard box conforming to variety, style, type and class optional of PPP-B-566 or PPP-B-676. The contents shall be cushioned to prevent movement inside the container. Installation instructions shall be placed in a sealed paper or plastic envelope and packaged in the same box as the hasp. Each box shall be closed in accordance with the appendix to the applicable box specification.

5.1.2 Level C. Each complete hasp shall be preserved and packaged in accordance with the contractor's standard practice. Installation instructions shall be placed in a sealed paper envelope and packaged in the same box as the hasp.

5.2 Packing. Packing shall be level A, B, or C as specified (see 6.2).

5.2.1 Level A packing. Hasps of one style only, preserved and packaged as specified in 5.1, shall be packed in a snug-fitting cleated plywood or nailed wood shipping container conforming to overseas type of PPP-B-601, or class 2, style 2 or 4 of PPP-B-621. Each shipping container shall be provided with a type I or II, grade C case liner conforming to MIL-L-10547. Closure and strapping shall be in accordance with the appendix of the applicable container specification. Gross weight of each shipping container shall not exceed 200 pounds.

5.2.2 Level B packing. Hasps of one style only, preserved and packaged as specified in 5.1, shall be packed as specified in 5.2.1, except that the shipping container shall conform to domestic type, style A or B of PPP-B-601, or class 1, style 2 or 4 of PPP-B-621, and a case liner shall not be required.

5.2.3 Level C packing. Hasps, preserved and packaged as specified in 5.1, shall be packed in a manner to ensure carrier acceptance and safe delivery at destination at the lowest transportation rate for such supplies. Containers shall be in accordance with Uniform Freight Classification or National Motor Freight Classification, as applicable.

5.3 Marking. In addition to any special marking required in the contract, interior packages and shipping containers shall be marked in accordance with MIL-STD-129.

6. NOTES

6.1 Intended use. This specification covers high security hasps of six basic styles for use with high security padlocks (Sargent and Greenleaf Model 831B, or equal), medium security padlocks conforming to MIL-P-43951 (Sargent and Greenleaf Model 826C, or equal), and the Navy produced dual control padlock.

6.2 Ordering data. Acquisition documents should specify the following:

(a) Title, number, and date of this specification.
(b) Title, number, and date of specification sheets (see 1.2).
(c) When a first article is required for inspection and approval (see 3.2 and 4.3).
(d) If other identification marking is required (see 3.7).
(e) Level of preservation and packaging and level of packing required (see 5.1 and 5.2).

6.3 First article inspection. Invitations for bids should provide that the Government reserves the right to waive the requirement for samples for first article inspection as to those bidders offering a product which has been previously acquired or tested by the Government, and that bidders offering such products, who wish to rely on such production or test, must furnish evidence with the bid that prior Government approval is presently appropriate for the pending contract.

6.4 First article. When a first article is required, it shall be inspected and approved under the appropriate provisions of FAR 52.209-4. The first article should be a preproduction sample, initial production item, or other specific item described under the definition of a first article in the FAR. The contracting officer should include specific instructions in all acquisitions regarding arrangements for inspection and approval of the first article.

6.5 Sub-contracted material and parts. The preparation for delivery requirements of referenced documents listed in section 2 do not apply when material and parts are acquired by the contractor for incorporation into the equipment and lose their separate identity when the equipment is shipped.

Preparing activity:
Navy - SH
(Project 5340-N078)

NOTES:
1. MATL. TO BE 304 L FOR ITEMS 1,2,3,4,6,7A,7B & 9.

2. INVESTMENT CASTING/MIL-C-6021E CL-2B OF CERTIFIED ALLOYS.
3. "ZYGLO" INSPECTION PER I 6866.

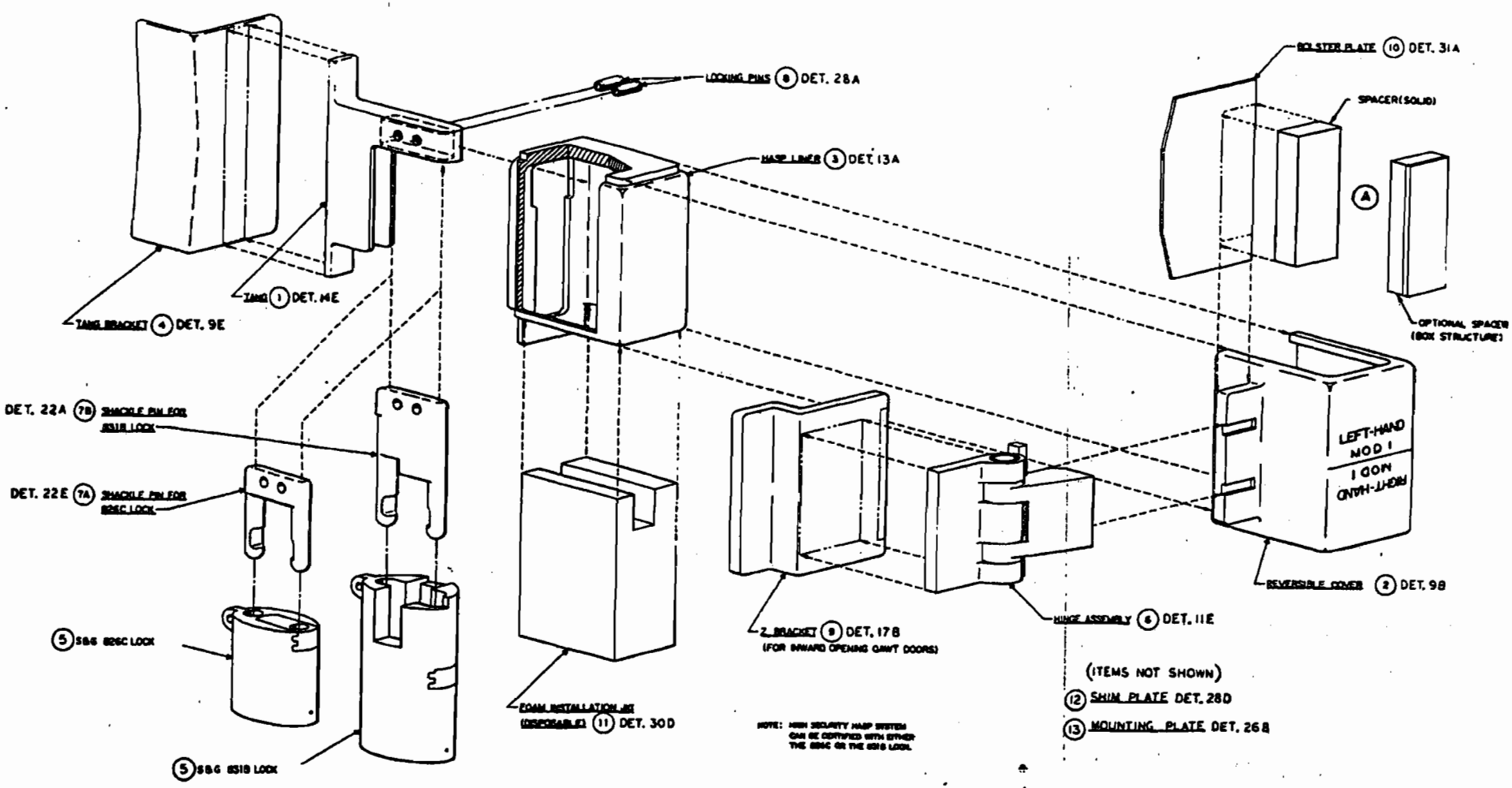

FIGURE 1. High security hasp, shipboard configuration and parts list.

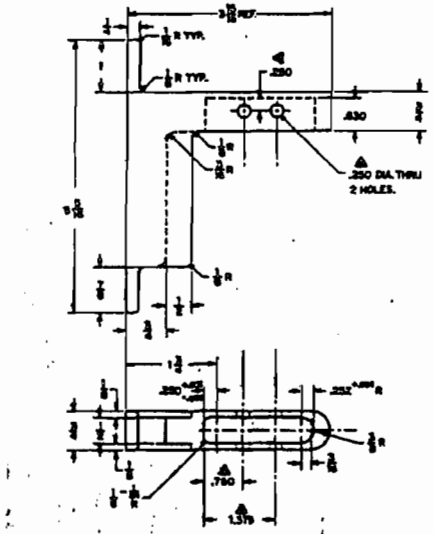

1 DETAIL 14E
TANG
MATL. 304 L
NO. REQD: 1 PER STYLE

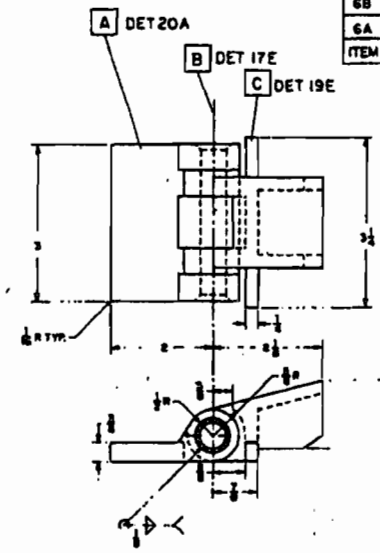

ITEM	NAME	REQD.	MATL	REMARKS
6C	BRACKET	1		SEE SHT. #1
6B	PIN	1	300 SERIES	1/2 ø X 3 LG.
6A	PAD	1		SEE SHT. #1

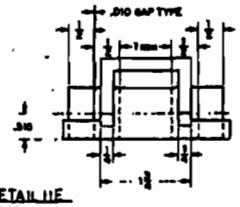

6 DETAIL 11E
HINGE ASSY.
WELDMENT
DETAILS ON SHEET 3
NO. REQD: 1 PER APPL. STYLE

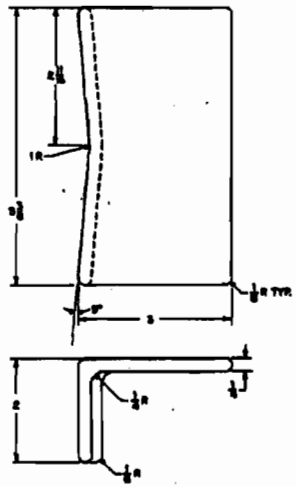

4 DETAIL 9E
TANG BRACKET
MATL. 304L
NO. REQD: 1 PER APPL. STYLE

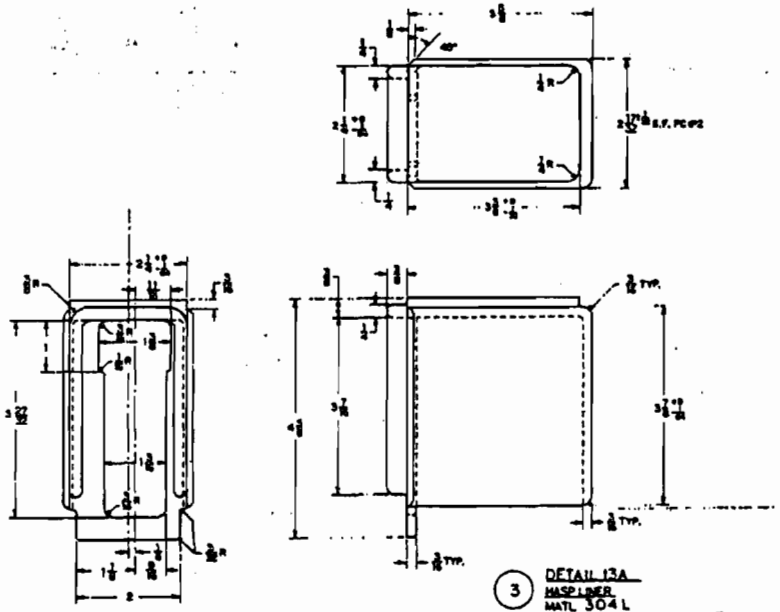

3 DETAIL 13A
HASP LINER
MATL. 304 L
NO. REQD: 1 PER STYLE

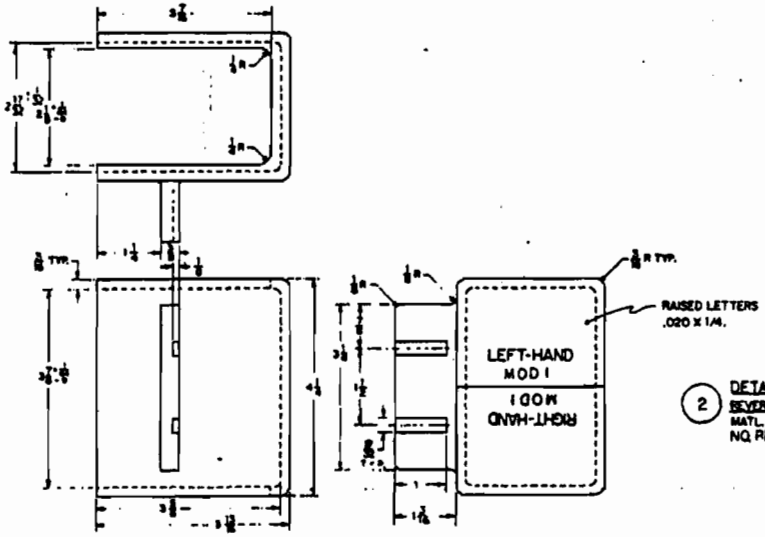

2 DETAIL 9B
REVERSIBLE COVER
MATL. 304L
NO. REQD: 1 PER STYLE

FIGURE 1. High security hasp, shipboard configuration and parts list. - Continued

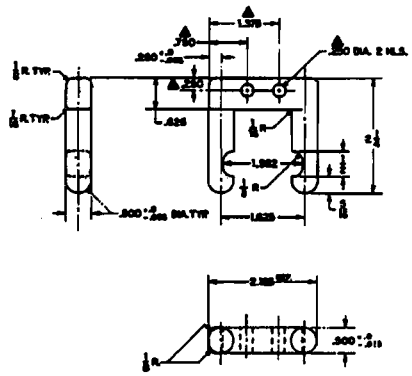

▲ SEE NOTE PC#1

7A DETAIL 22E
SHACKLE PIN FOR
826-C LOCK / 1/2 ø
SHACKLE REMOVED
MATL. 304L
NO. REQ'D: 1 PER STYLE

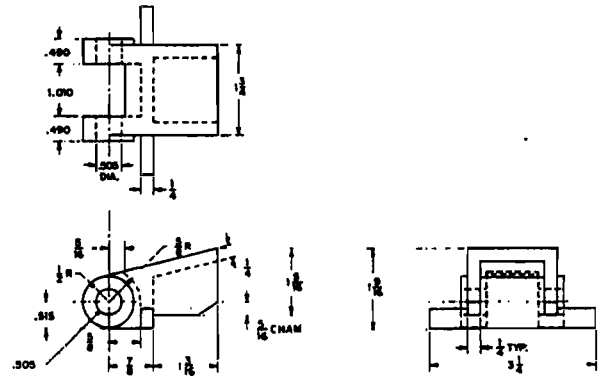

6C DETAIL 19E
HINGE BRACKET
MATL. 304L

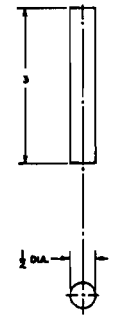

6B DETAIL 17E
PIN
MATL. 300SSTL

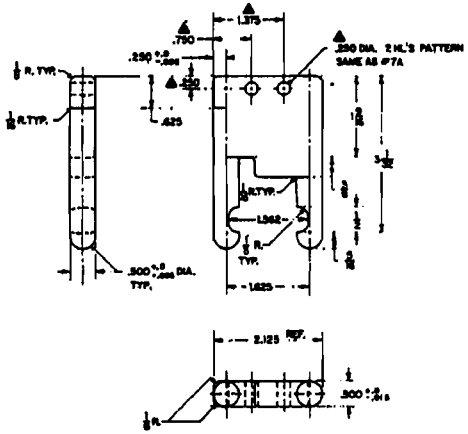

▲ SEE NOTE PC#1

7B DETAIL 22A
SHACKLE PIN FOR
831-B WITH 1/2 ø
SHACKLE REMOVED
MATL. 304L
NO. REQ'D: 2 PER STYLE

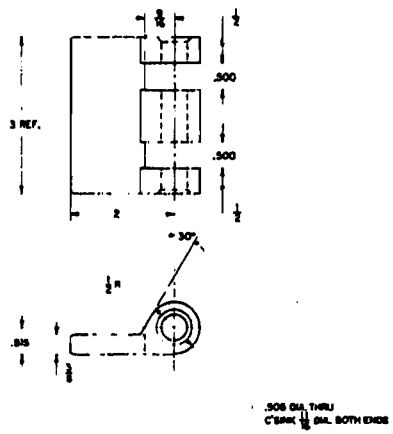

6A DETAIL 20A
HINGE PAD
MATL. 304L

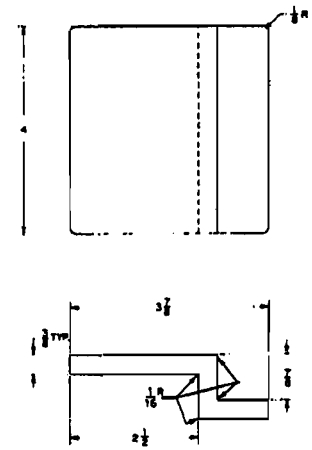

9 DETAIL 17B
"Z" BRACKET FOR
INWARD OPENING
CAWT DOORS
MATL. 304L
NO. REQ'D: 1 PER APPL. STYLE

FIGURE 1. High security hasp, shipboard configuration and parts list. - Continued

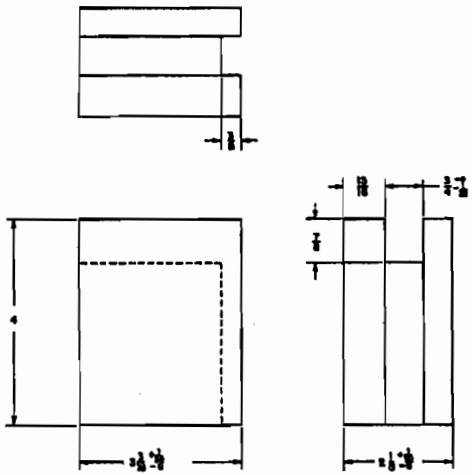

(11) DETAIL 30D
FOAM INSTALLATION JIG
MATL: POLYETHELENE
1.7 TO 2#/FT.^{3} DENSITY
(HOT WIRE CUT PERMISSABLE)
NO. REQ'D 1 PER STYLE

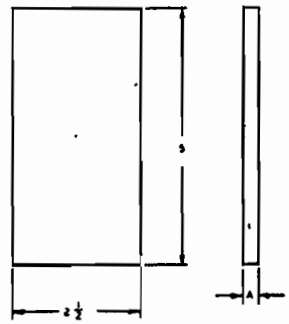

THICKNESS A	NO. REQ'D
1/4	1
1/2	1
3/4	1

(12) DETAIL 28D
SHIM PLATE
MATL: ASTM A36 PLATE
NO. REQ'D (SEE TABLE) PER APPL. STYLE

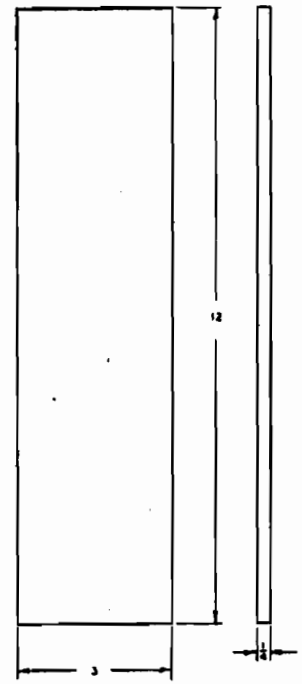

(13) DETAIL 26B
MOUNTING PLATE
MATL: 304 STAINLESS STEEL
NO. REQ'D: 1 PER APPL. STYLE

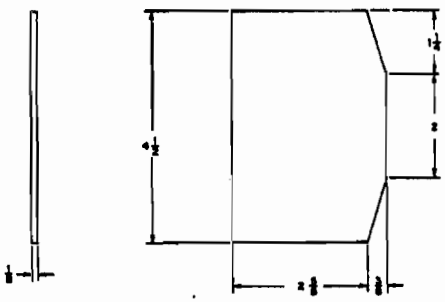

(10) DETAIL 31A
BOLSTER PLATE
MATL: ASTM A36 PLATE
NO. REQ'D 1 PER APPL. STYLE

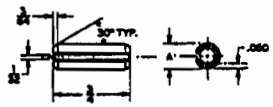

SCALE 2:1

A			WALL THICKNESS	MIN. DOUBLE SHEAR STRENGTH IN POUNDS
NOMINAL PIN DIA.	MAXIMUM DIA. (MD HSS GAGE)	MINIMUM DIA. (US DIA/DS/HSS)	S STANDARD	STANDARD PIN (CARBON STEEL)
.250	.254	.250	.060	7,700

(8) DETAIL 28A
LOCKING PIN
MATL: CARBON STEEL ROCKWELL C 46-53 CONFORMING TO MIL-P-10971
NO. REQ'D 2 PER STYLE

FIGURE 1. High security hasp, shipboard configuration and parts list. - Continued

MILITARY SPECIFICATION SHEET

HASP, HIGH SECURITY, SHROUDED FOR SHIPBOARD DOORS AND HATCHES USING HIGH AND MEDIUM SECURITY PADLOCK, STYLE 1

This specification sheet is approved for use by the Naval Sea Systems Command, Department of the Navy, and is available for use by all Departments and Agencies of the Department of Defense.

The complete requirements for acquiring the hasp described herein shall consist of this document and the latest issue of MIL-H-24653(SH).

REQUIREMENTS:

The configuration and marking requirements applicable to style 1 hasp shall conform to figure 1.

Installation instructions: Each hasp assembly shall be furnished with installation instructions shown on figure 2.

Preparing activity:
Navy - SH
(Project 5340-N079)

FSC 5340

☆U.S. GOVERNMENT PRINTING OFFICE: 1985—505-038/22524

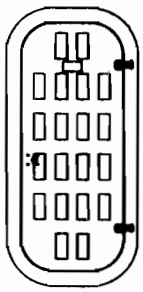

NON TIGHT DOOR

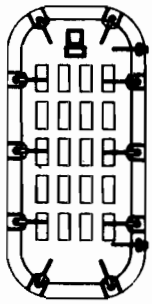

4-6,-8-10, OR 12 DOG WATER TIGHT
INDIVIDUALLY DOGGED DOOR
(10 DOG SHOWN)

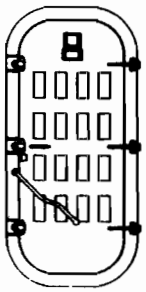

3, 6, 8 OR 10 DOG
GANG OPERATED
(3 DOG SHOWN)

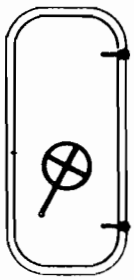

WATER TIGHT DOOR
SLIDING DOG TYPE

FIGURE 1. Configuration for left-hand or right-hand hinged doors swinging out to open style 1.

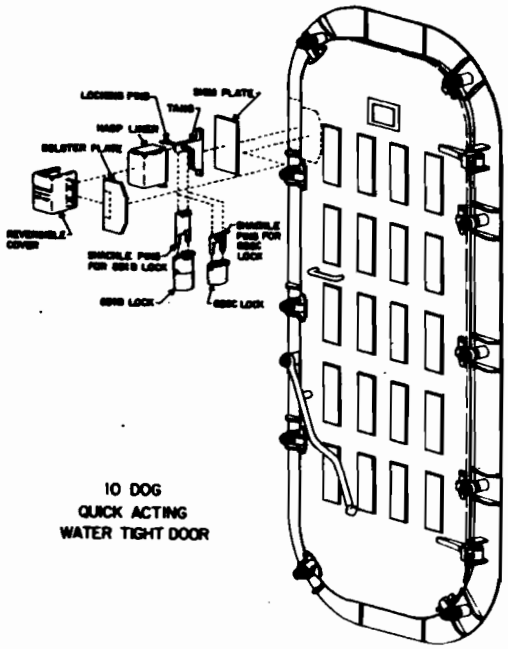

NOTE: HIGH SECURITY HASP SYSTEM CAN BE CERTIFIED WITH EITHER THE 826C OR THE 831B LOCK.

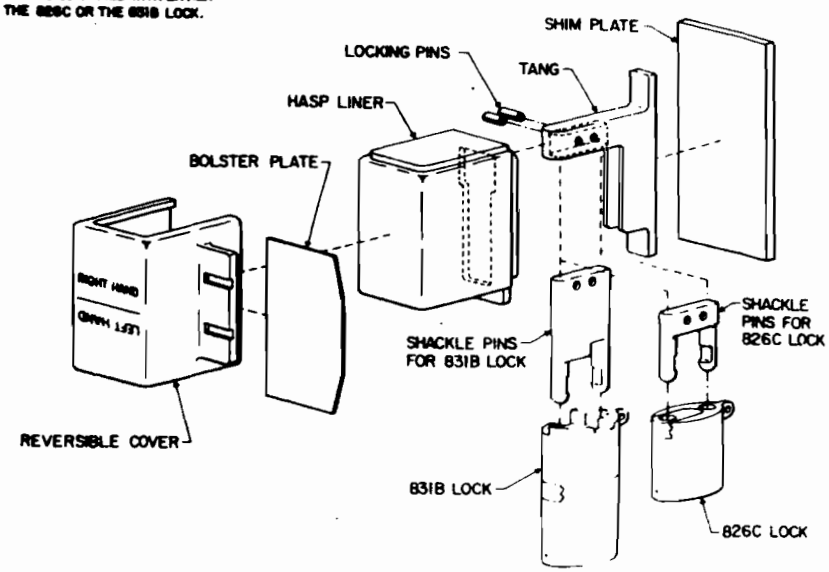

SH 131786

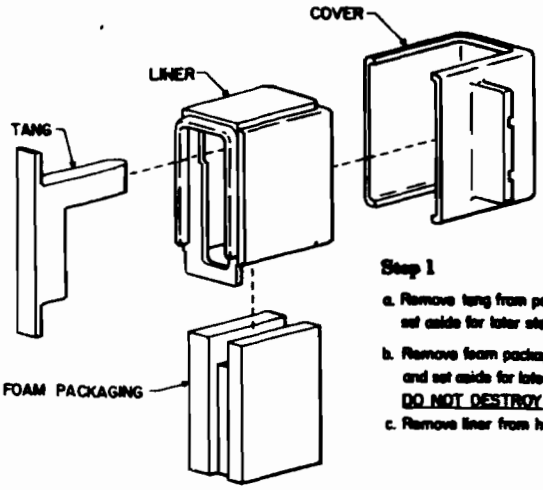

Step 1

a. Remove tang from packaging and set aside for later step.

b. Remove foam packaging from liner and set aside for later step. DO NOT DESTROY!

c. Remove liner from hasp cover.

Step 2

General:

The hasp cover is reversible. Its final configuration must be determined during installation. The attitude of the liner within the hasp cover produces the left-hand or right-hand configuration. Figure (a) shows the hasp and liner in the right-hand mode. For use with doors swinging out to open, the hasp in its right-hand mode will be welded to right-hand hinged doors. The hasp in its left-hand mode will be welded to left-hand hinged doors.

a. Determine the attitude of the hasp liner and cover assembly by holding units against the door as shown.

b. After trial assembly, weld the liner to the cover as shown.

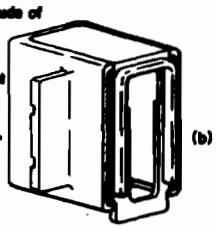

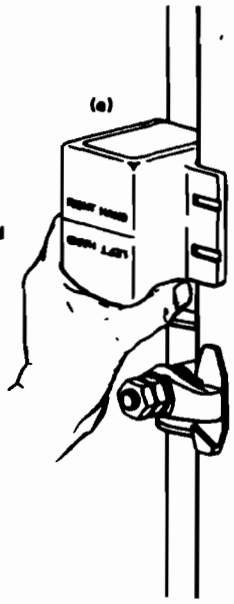

(only use the welding rod provided or specified in this document. Strength and security capabilities will be seriously impaired if a non-certified rod is used.)

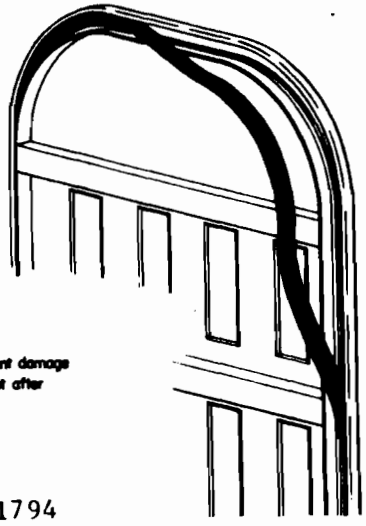

Step 3

Remove water tight gasket to prevent damage from welding heat or replace gasket after welding.

SH 131794

Step 4

General:

To strengthen the door, a bolster plate has been provided. This plate will be fully welded to the door face. The hasp cover/liner assembly will then be welded to it.

a. Position the bolster plate and hasp cover/liner assembly as shown. A minimum of 6 inches of clearance must be provided between the open locking end of the hasp and any obstruction to allow removal of the lock.

b. Clamp the hasp cover/liner assembly in place.

c. Weld the bolster plate to the door face as shown.

d. Weld the hasp cover/liner assembly to the bolster plate.

e. Remove clamp and allow welds to air cool.

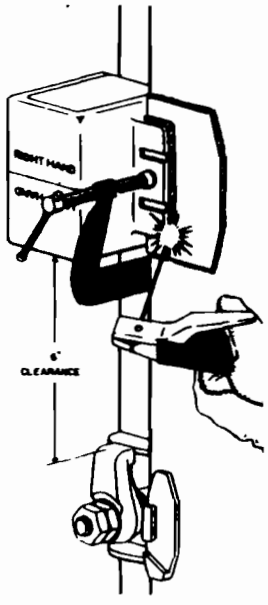

Step 5

Reinstall gasket.

WELDING ROD SPEC.

STAINLESS STEEL, TYPE E, CLASS 1,
310-16 3/32 DIA.
AWS A5.4 PER MIL-E 22200/2

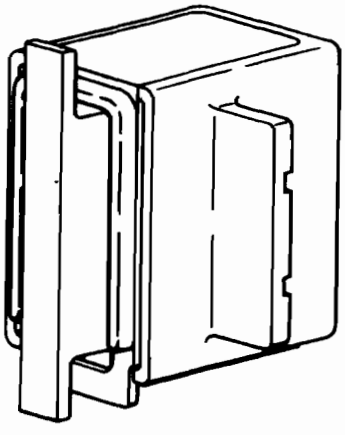

Hasp shown with liner, tang, cover and packaging (as shipped from manufacturer.)

FIGURE 2. Installation procedures for left-hand or right-hand hinged doors swinging out to open style 1.

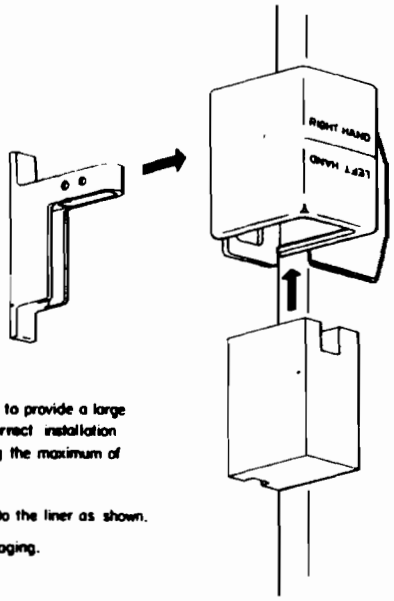

Step 6

General:

The hasp is designed to provide a large degree of hasp/lock flexibility. Correct installation of the tang is important to insuring the maximum of flexibility.

a. Reinsert the foam packaging into the liner as shown.

b. Reinsert the tang into the packaging.

Step 6 (cont.)

c. Close and dog door.

d. Measure space between tang and coaming.

e. Fill any space greater than 1/8" with shim plates provided.

<u>The tang may be adjusted up to 1/8" but any more must be shimmed!</u>

f. Weld shim plate to coaming.

g. Tock weld top and bottom of tang flanges.

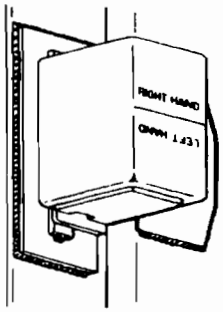

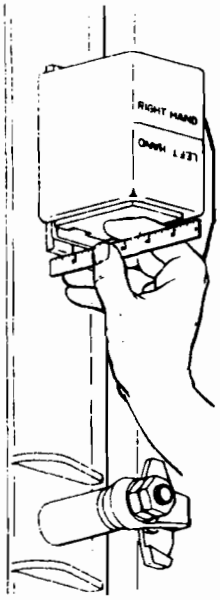

Step 7

General:

The hasp is designed to be used with one of two locks – The Sargent and Greenleaf Inc., 826C and 831B. Either lock meets the high security requirements when used with the hasp. Both require their shackles to be removed (by a locksmith.) The long set of pins may be used with either lock. The short set must be used with the 826C.

a. Insert the set of pins selected into the tang as shown and drive in locking pins.

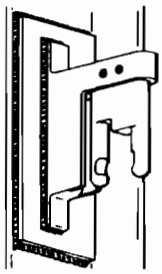

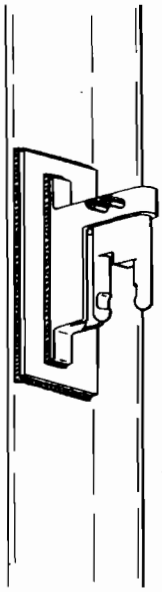

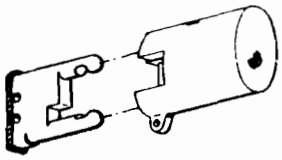

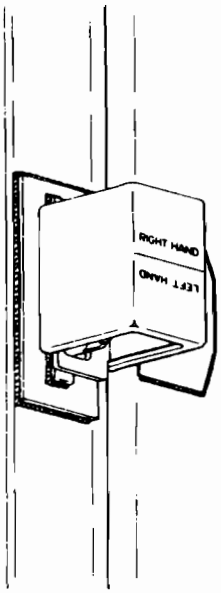

Step 8

General:

A second set of shackle pins are provided to allow the lock to be stored outside the hasp. This set of pins may be installed anywhere on the door or coaming at the discretion of the operating personnel.

a. Hold or clamp shackle pins to selected surface.

b. Weld pins in place.

SH 131794

Step 6 (cont.)

h. Open door leaving tang attached to coaming.

i. Finish welding tang to coaming as shown. Allow welds to air cool.

j. Remove foam packaging from cover/liner and discard.

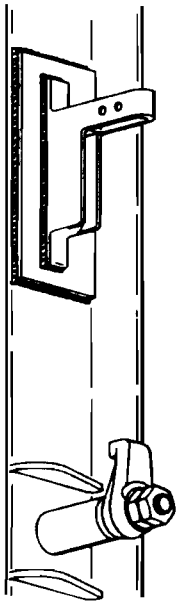

FIGURE

2. Installation procedures for left-hand or right-hand hinged doors swinging out to open style 1. - Continued

MILITARY SPECIFICATION SHEET

HASP, HIGH SECURITY, SHROUDED FOR SHIPBOARD DOORS AND HATCHES USING HIGH AND MEDIUM SECURITY PADLOCK, STYLE 2

This specification sheet is approved for use by the Naval Sea Systems Command, Department of the Navy, and is available for use by all Departments and Agencies of the Department of Defense.

The complete requirements for acquiring the hasp described herein shall consist of this document and the latest issue of MIL-H-24653(SH).

REQUIREMENTS:

The configuration and marking requirements applicable to style 2 hasp shall conform to figure 1.

Installation instructions: Each hasp assembly shall be furnished with installation instructions shown on figure 2.

Preparing activity:
Navy - SH
(Project 5340-N080)

FSC 5340

☆U.S. GOVERNMENT PRINTING OFFICE: 1985—505-038/22525

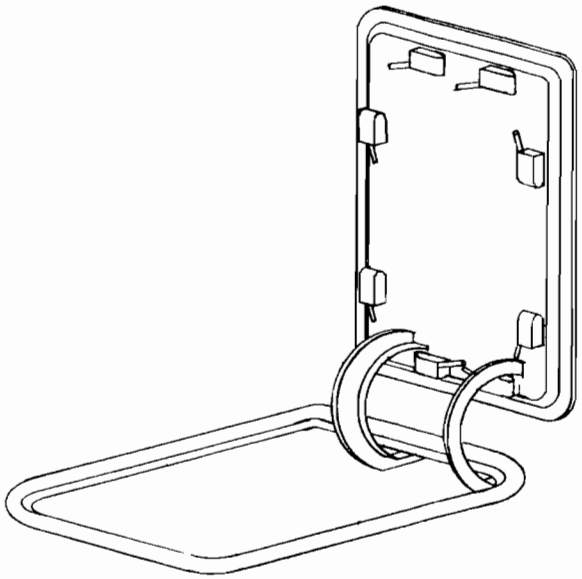

REVISION STATUS OF SHEETS			
SHEET	1	2	3
REV	A	A	A

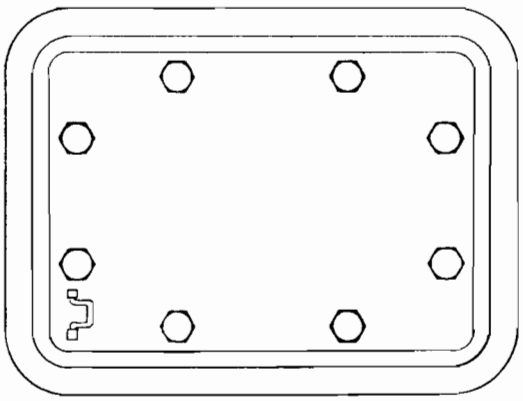

HATCH

FIGURE 1. Configuration for left-hand or right-hand hinged armored doors swinging out to open, style 2.

NOTE
HIGH SECURITY HASP SYSTEM
CAN BE CERTIFED WITH EITHER
THE 826C OR 831B LOCK

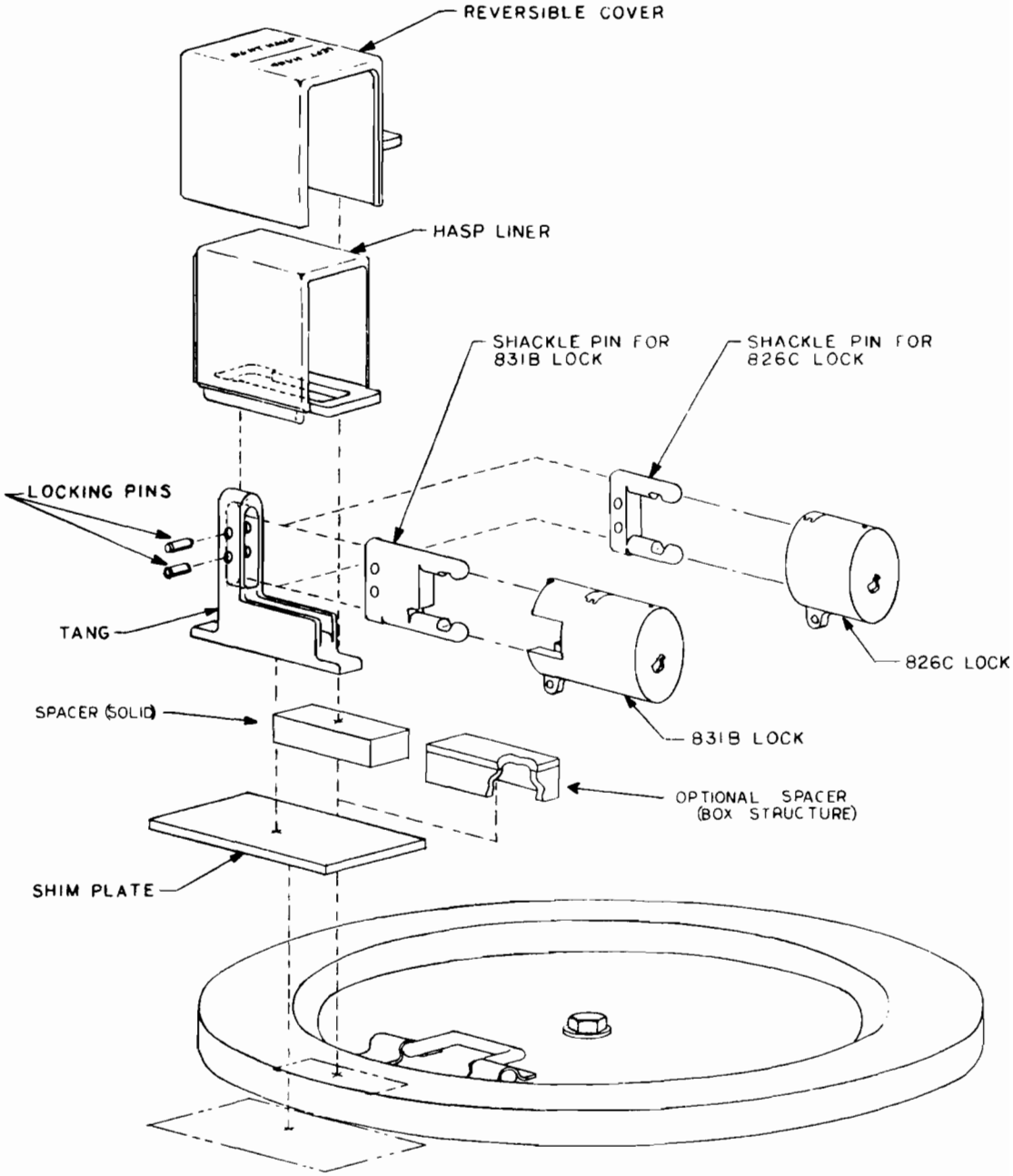

SCUTTLE

SH 131787

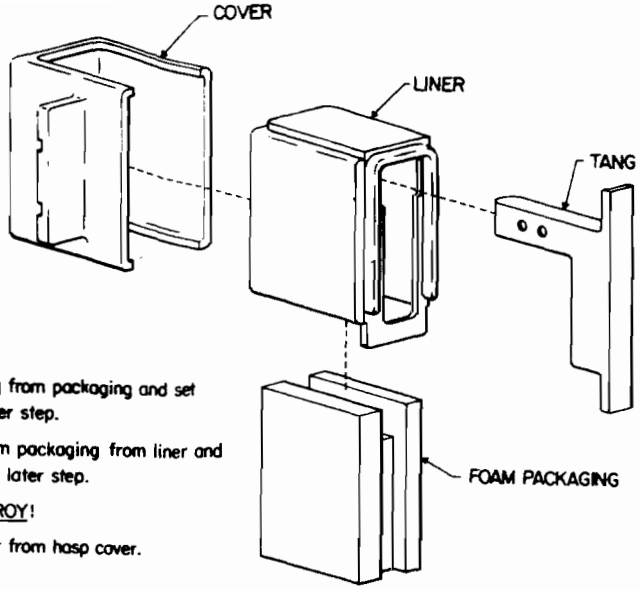

Step 1

a. Remove tang from packaging and set aside for later step.

b. Remove foam packaging from liner and set-aside for later step.

DO NOT DESTROY!

c. Remove liner from hasp cover.

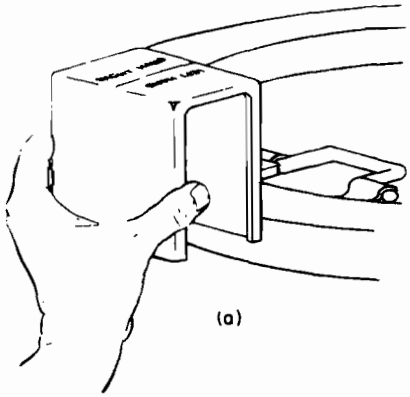

Step 2

General:

The hasp cover is reversible. Its final configuration must be determined during installation. The attitude of the liner within the hasp cover produces the left-hand or right-hand configuration. Figure (a) shows the hasp and liner in the right-hand mode. In the case of a watertight scuttle, the two configurations allow the user to select the direction from which the lock is to be accessible.

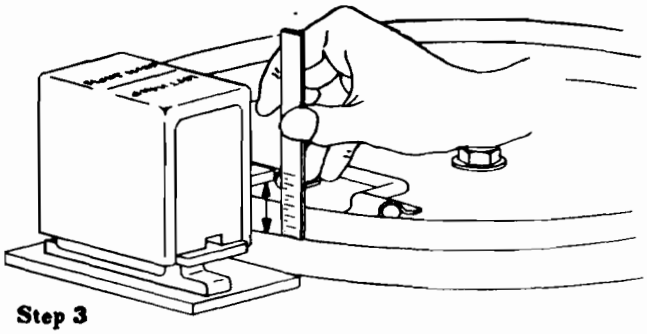

Step 3

Most armored closures do not have a 1 7/8 dimension between the closure face and the frame or deck. Therefore, a shim or box structure must be fabricated to fill the space between the flange on the hasp cover and the closure face.

This spacer must be made from one of the following.
(1) Structural steel if a solid shim is used.
(2) 300 series stainless steel, 1/4 inch min thick, if a welded box structure is used to fill the space. Weld filler metal should be stainless steel.

Spacer thickness should be determined by inserting the tang into the hasp with the foam jig in place, and placing the hasp as shown on the closure. Before this is done, both surfaces should be free of any tile or other coverings. After the hasp has been located and is perpendicular to the frame or deck, the gap between the cover flange and the closure face should be measured. This dimension is the thickness of the spacer. Spacer thickness can be increased up to 1/8 inch above the minimum thickness to allow use of standard size stock.

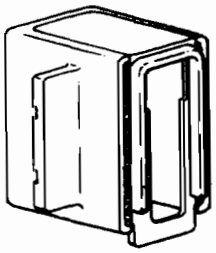

a. Determine the attitude of the hasp liner and cover assy. by holding units against the scuttle as shown.

b. After trial assembly, weld the liner to the cover as shown (only use the welding rod provided or specified in this document. Strength and security capabilities will be seriously impaired if a non-certified rod is used.)

Step 4

Remove watertight gasket to prevent damage from welding heat or replace gasket after welding.

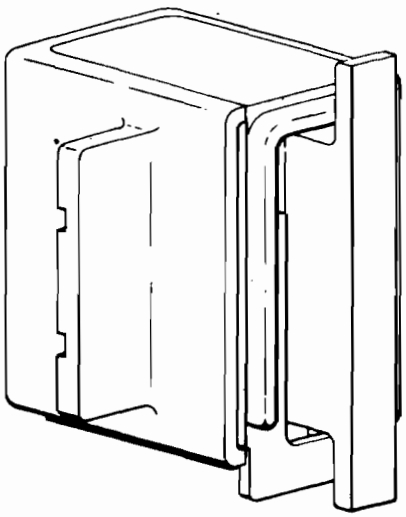

Hasp shown with liner, tang, cover and packaging (as shipped from manufacturer.)

FIGURE 2. Installation procedures for left-hand or right-hand hinged armored doors swinging out to open, style 2.

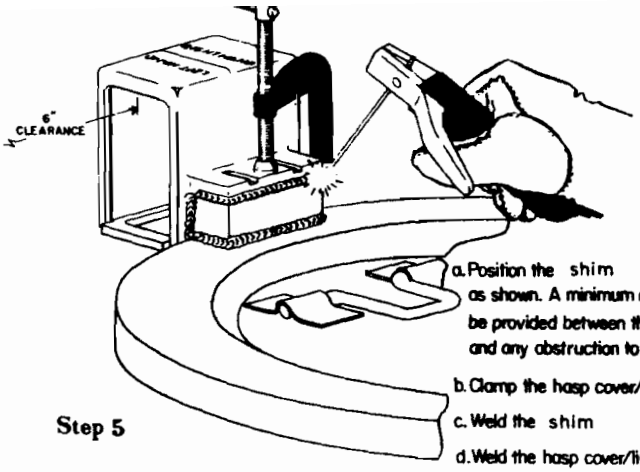

Step 5

a. Position the shim and hasp cover/liner assy. as shown. A minimum of 6 inches of clearance must be provided between the open locking end of the hasp and any obstruction to allow removal of the lock.

b. Clamp the hasp cover/liner assy. in place.

c. Weld the shim to the door face as shown.

d. Weld the hasp cover/liner assy. to the shim.

e. Remove clamp and allow welds to air cool.

WELDING ROD SPEC
STAINLESS STEEL TYPE E, CLASS 1
310-16 3/32 DIA
AWS A5.4 PER MIL-E-22200/2

Step 6

Reinstall gasket.

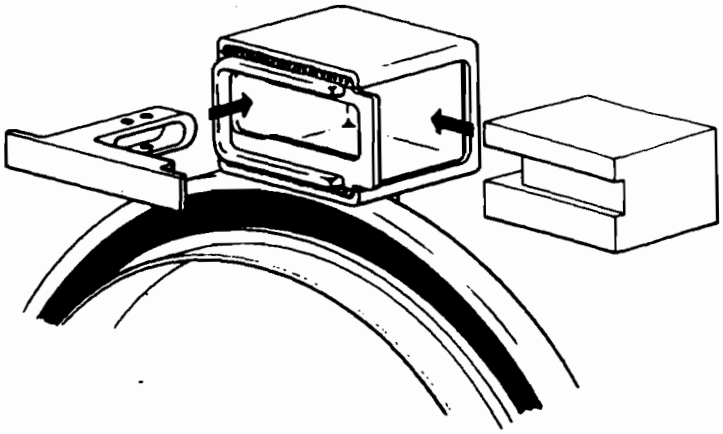

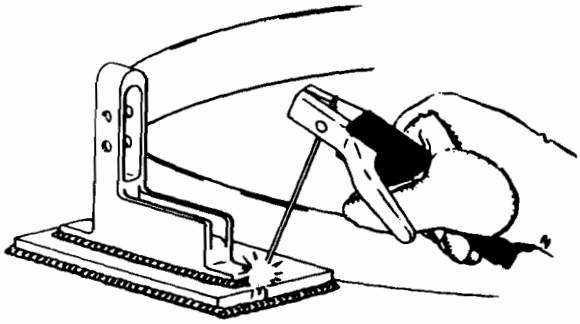

Step 7 (cont.)

h. Open door leaving tang attached to coaming, hatch or deck.

i. Finish welding tang as shown. Allow welds to air cool.

j. Remove foam packaging from cover/liner and discard.

Step 7

The hasp is designed to provide a large degree of hasp/lock flexibility. Correct installation of the tang is important to insuring the maximum of flexibility.

a. Reinsert the foam packaging into the liner as shown.

b. Reinsert the tang into the packaging.

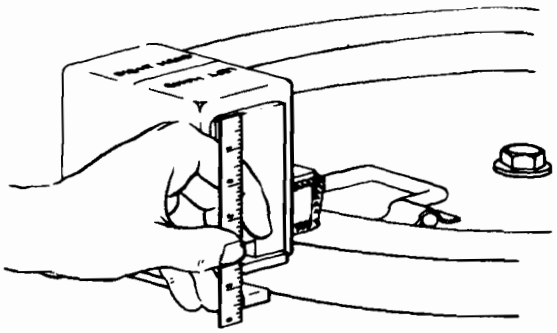

Step 7 (cont.)

c. Close and dog scuttle.

d. Measure space between tang and coaming, hatch or deck.

e. Fill any space greater than 1/8" with shim plates provided. The tang may be adjusted up to 1/8" but any more must be shimmed!

f. Weld shim plate to coaming, hatch or deck.

g. Tack weld top and bottom of tang flanges.

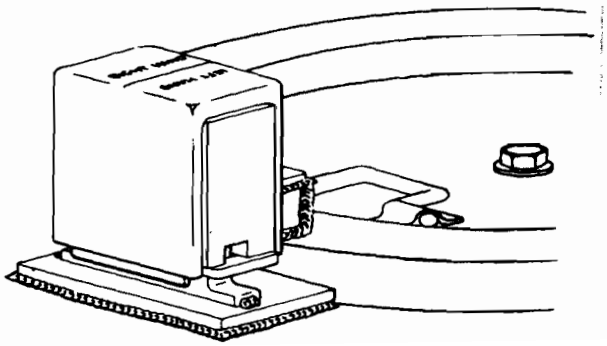

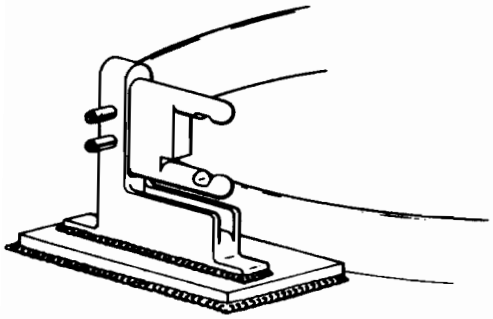

Step 8

General:

The hasp is designed to be used with one of two locks – The Sargent and Greenleaf Inc., 826C and 831B. Either lock meets the high security requirements when used with the hasp. Both require their shackles to be removed

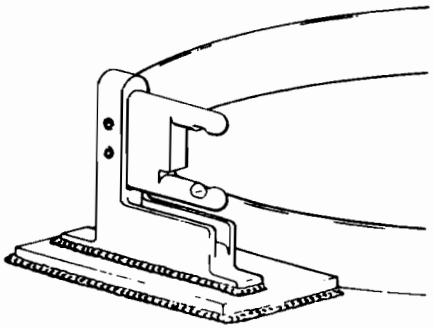

(by a locksmith.) The long set of pins may be used with either lock. The short set must be used with the 826C.

a. Insert the set of pins selected into the tang as shown and drive in locking pins.

SH 131795

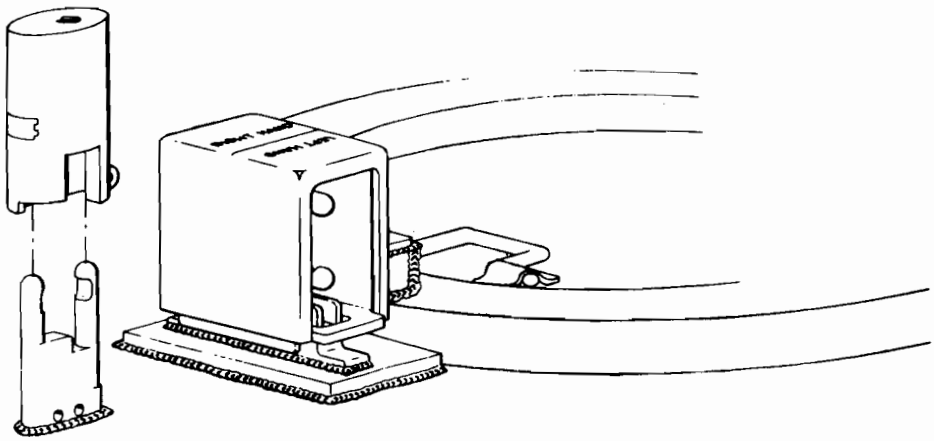

Step 9

General:

A second set of shackle pins are provided to allow the lock to be stored outside the hasp. This set of pins may be installed anywhere on the scuttle, hatch or deck at the discretion of the operating personnel.

a. Hold or clamp shackle pins to selected surface.

b. Weld pins in place.

MILITARY SPECIFICATION SHEET

HASP, HIGH SECURITY, SHROUDED FOR SHIPBOARD DOORS AND HATCHES USING HIGH AND MEDIUM SECURITY PADLOCK, STYLE 3

This specification sheet is approved for use by the Naval Sea Systems Command, Department of the Navy, and is available for use by all Departments and Agencies of the Department of Defense.

The complete requirements for acquiring the hasp described herein shall consist of this document and the latest issue of MIL-H-24653(SH).

REQUIREMENTS:

The configuration and marking requirements applicable to style 3 hasp shall conform to figure 1.

Installation instructions: Each hasp assembly shall be furnished with installation instructions shown on figure 2.

Preparing activity:
Navy - SH
(Project 5340-N081)

FSC 5340

☆U.S. GOVERNMENT PRINTING OFFICE: 1985—505-038/22526

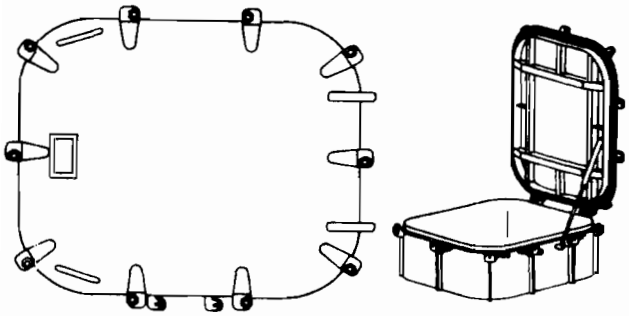

INDIVIDUALLY DOGGED RAISED HATCH
(30 X 36 SHOWN)

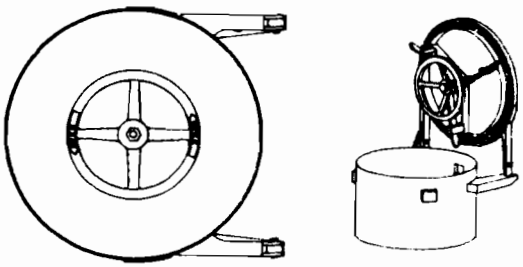

QUICK ACTING RAISED SCUTTLE
(3 DOG SHOWN)

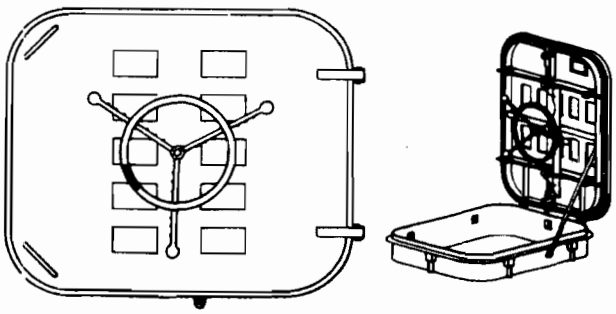

QUICK ACTING WATER TIGHT RAISED HATCH
(30 X 36 SHOWN)

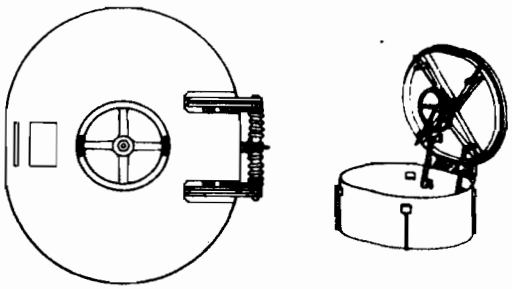

QUICK ACTING WATER TIGHT RAISED HATCH
(24 X 30 SHOWN)

FIGURE 1. Configuration for watertight hatches, style 3.

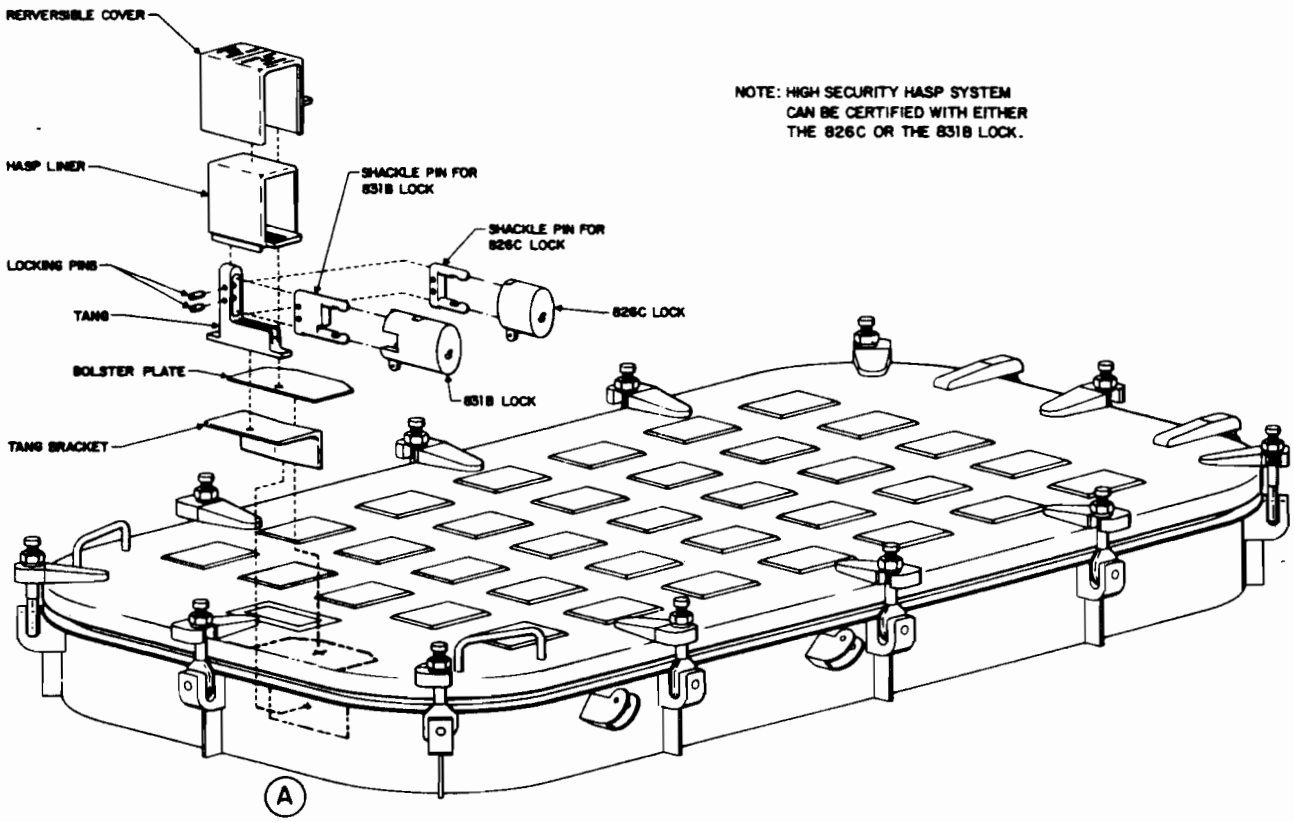

INDIVIDUALLY DOGGED RAISED HATCH
30 X 60 SHOWN

A	A	A
1	2	3
REVISION STATUS OF SHEETS		

SH 131788

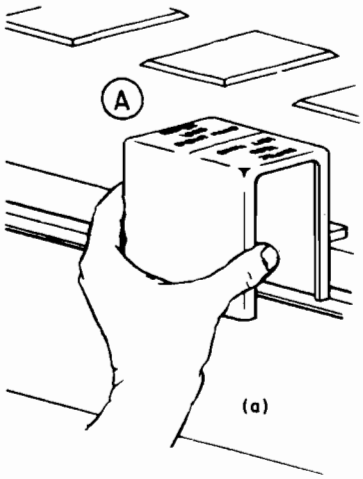

Step 2

General:

The hasp cover is reversible. Its final configuration must be determined during installation. The attitude of the liner within the hasp cover produces the left-hand or right-hand configuration. Figure (a) shows the hasp and liner in the right-hand mode. In the case of a water tight hatch, the two available configurations allow the user to select the direction from which the lock is to be accessible.

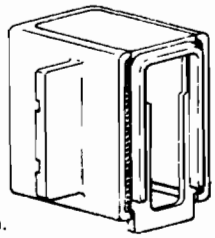

(b)

a. Determine the attitude of the hasp liner and cover assembly by holding unit against the hatch face as shown.

b. After trial assembly, weld the liner to the cover as shown (only use the welding rod provided or specified in this document. Strength and security capabilities will be seriously impaired if a non-certified rod is used.)

WELDING ROD SPEC.

STAINLESS STEEL TYPE E, CLASS I
310-16 3/32 DIA.
AWS A 5.4 PER MIL-E-22200/2

FIGURE 2. Installation procedures for watertight hatches, style 3.

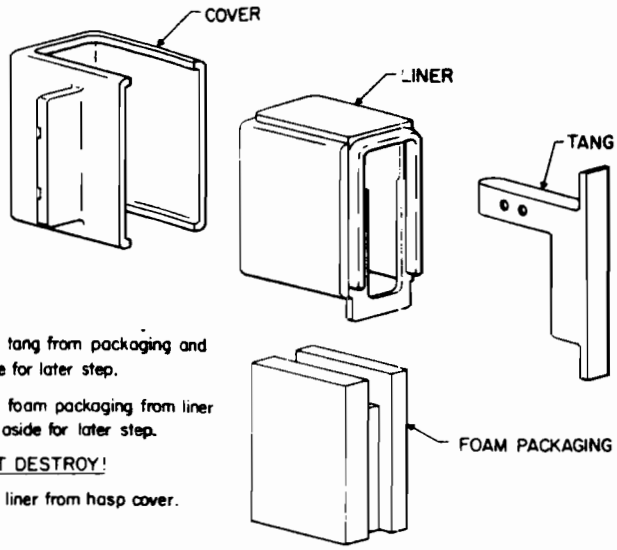

Step 1

a. Remove tang from packaging and set aside for later step.

b. Remove foam packaging from liner and set aside for later step.

DO NOT DESTROY!

c. Remove liner from hasp cover.

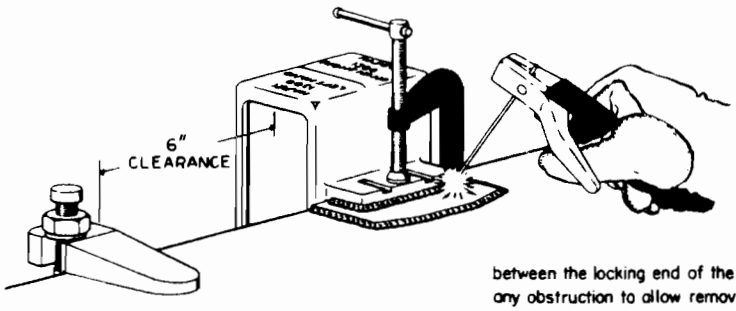

Step 4

General

To strengthen the hatch face, a bolster plate has been provided. This plate will be fully welded to the hatch face. The hasp cover/liner assembly will then be welded to it.

a. Position the bolster plate and hasp cover/liner assembly as shown. A minimum of 6 inches of clearance must be provided between the locking end of the hasp and any obstruction to allow removal of the lock.

b. Clamp the hasp cover/liner assy. in place.

c. Weld the bolster plate to the hatch face as shown.

d. Weld the hasp cover/liner assy. to the bolster plate.

e. Remove clamp and allow welds to air cool.

Step 5

Reinstall gasket.

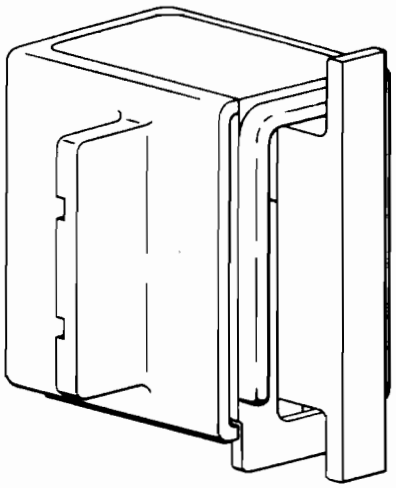

Hasp shown with liner, tang, cover and packaging (as shipped from manufacturer.)

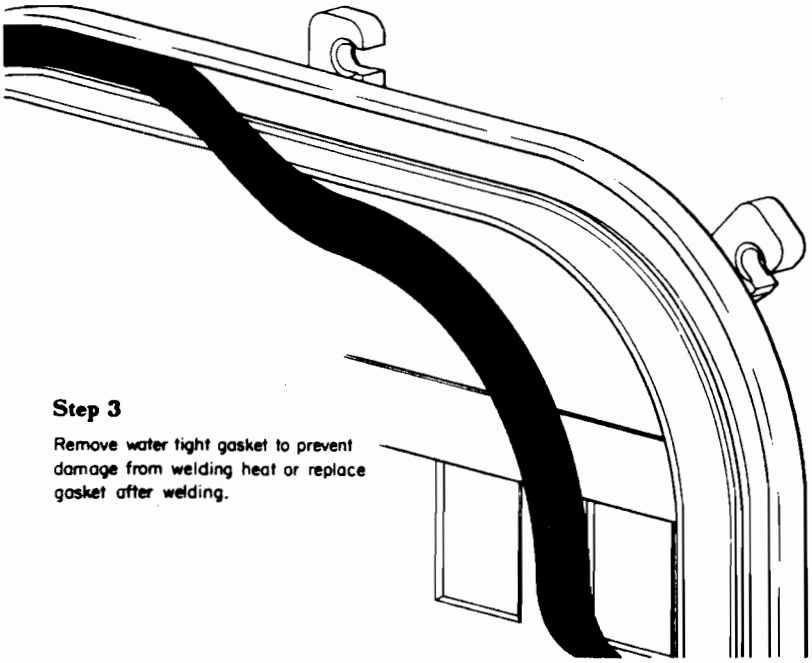

Step 3

Remove water tight gasket to prevent damage from welding heat or replace gasket after welding.

SH 131796

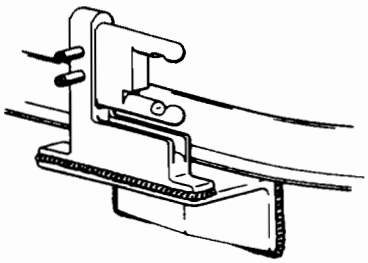

Step 7

General:

The 1300 series hasp is designed to be used with one of the two locks—the Sargent and Greenleaf Inc., 826C and 831B. Either lock meets the high security requirements when used with the 1300 series hasp. Both require their shackles to be removed (by a locksmith.) The long set of pins may be used with either lock. The short set must be used with the 826C.

a. Insert the set of pins selected into the tang as shown and drive in locking pins.

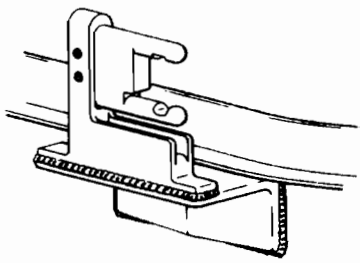

FIGURE 2. Installation procedures for watertight hatches, style 3. - Continued

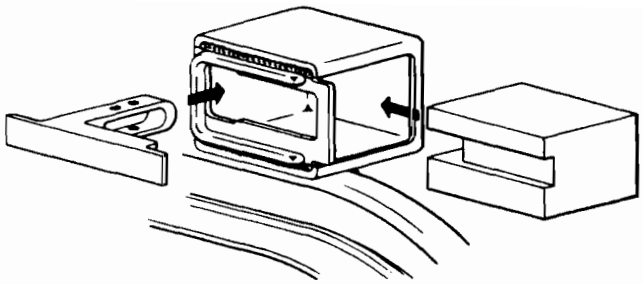

Step 6

General:
The 1300 series hasp is designed to provide a large degree of hasp/lock flexibility. Correct installation of the tang is important to insuring the maximum of flexibility. Also, because a raised hatch has no mounting surface for the tang, a tang bracket has been provided. The tang bracket will be welded to the raised coaming and the tang to the bracket.

a. Reinsert the foam packaging into the liner as shown.

b. Reinsert the tang into the packaging.

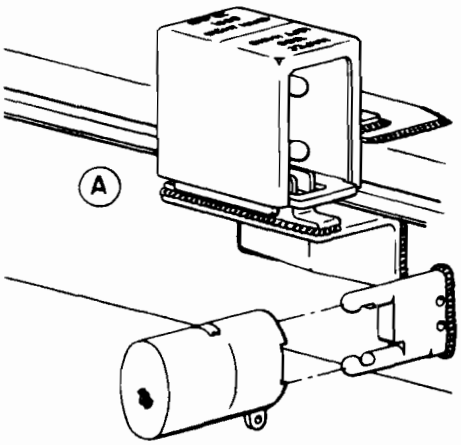

Step 8

A second set of shackle pins are provided to allow the lock to be stored outside of the hasp. This set of pins may be installed anywhere on the hatch or coaming at the discretion of the operating personnel.

a. Hold or clamp shackle pins to selected surface.

b. Weld pins in place.

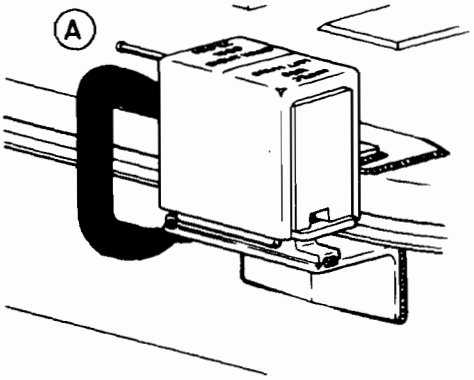

Step 6 (cont.)

c. Close and dog hatch.

d. Clamp tang bracket to tang with angled leg against the hatch coaming as shown.

e. Weld tang bracket to raised coaming as shown.

f. Tack weld top and bottom of tang flanges to tang bracket.

g. Open hatch leaving tang attached to bracket.

h. Finish welding tang to tang bracket as shown and allow welds to air cool.

i. Remove foam packaging from cover/liner and discard.

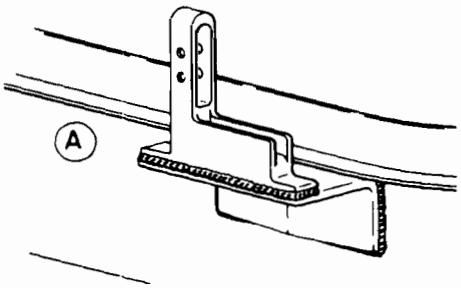

MILITARY SPECIFICATION SHEET

HASP, HIGH SECURITY, SHROUDED FOR SHIPBOARD DOORS AND HATCHES USING HIGH AND MEDIUM SECURITY PADLOCK, STYLE 4

This specification sheet is approved for use by the Naval Sea Systems Command, Department of the Navy, and is available for use by all Departments and Agencies of the Department of Defense.

The complete requirements for acquiring the hasp described herein shall consist of this document and the latest issue of MIL-H-24653(SH).

REQUIREMENTS:

The configuration and marking requirements applicable to style 4 hasp shall conform to figure 1.

Installation instructions: Each hasp assembly shall be furnished with installation instructions shown on figure 2.

Preparing activity:
Navy - SH
(Project 5340-N082)

FSC 5340

☆U.S. GOVERNMENT PRINTING OFFICE: 1985—505-038/22527

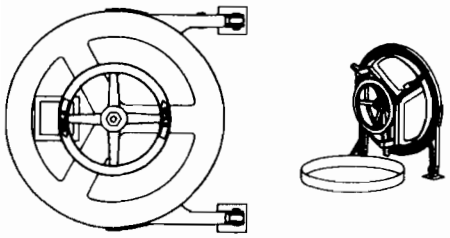

18-21 OR 25" DIA. QUICK ACTING
WATER TIGHT SCUTTLE ON DECK

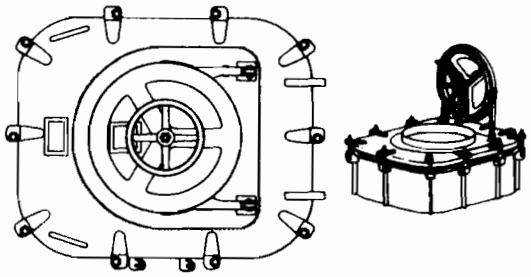

18-21 OR 25" DIA. QUICK ACTING SCUTTLE
ON A RAISED HATCH (30X36" SHOWN)

FIGURE 1. Configuration for watertight scuttles, style 4.

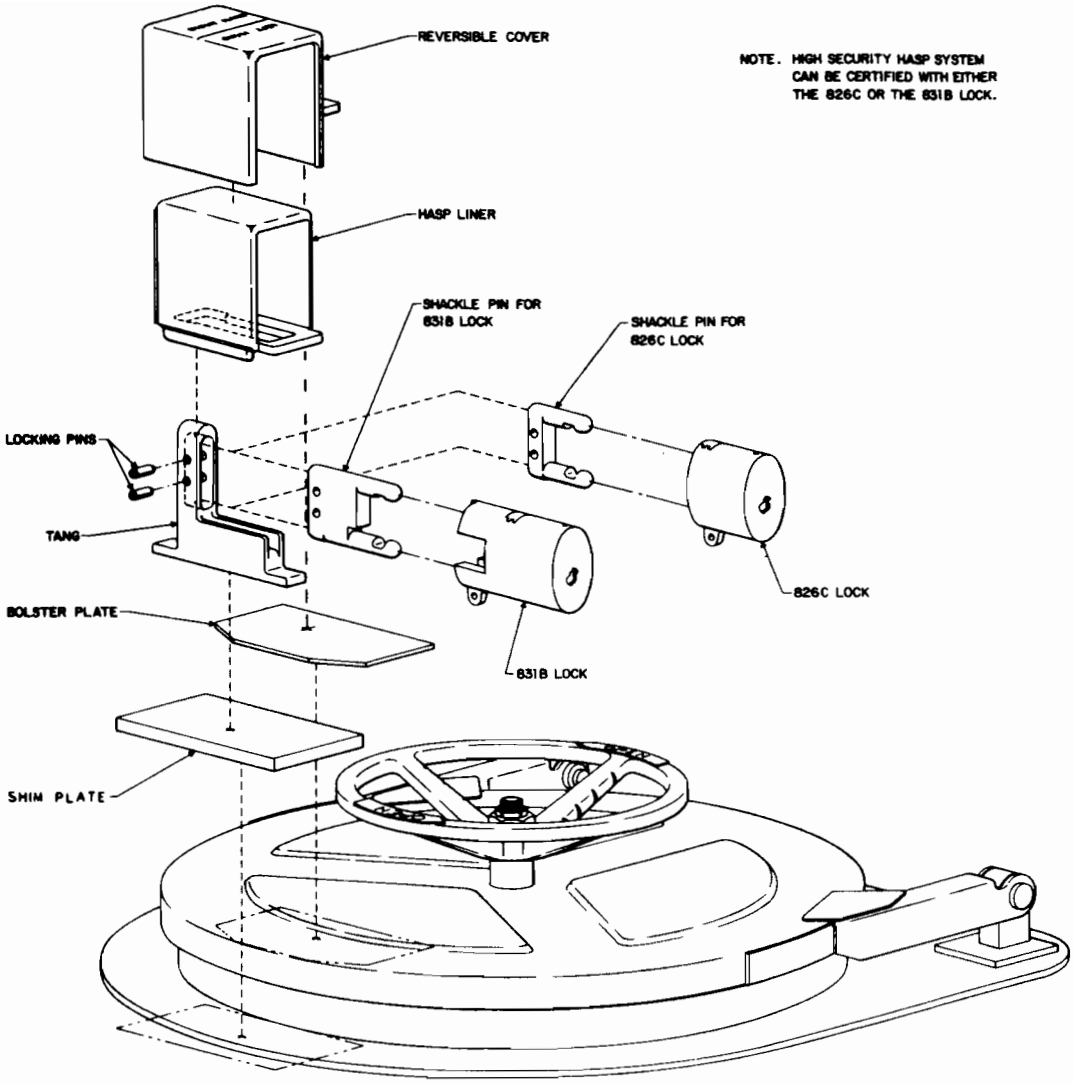

18-21 OR 25" DIA. QUICK ACTING
WATER TIGHT SCUTTLE

SH 131789

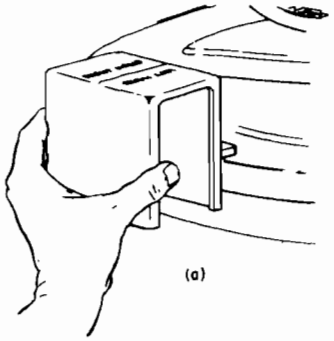

Step 2

General:

The hasp cover is reversible. Its final configuration must be determined during installation. The attitude of the liner within the hasp cover produces the left-hand or right-hand configuration. Figure (a) shows the hasp and liner in the right-hand mode. In the case of a watertight scuttle, the two configurations allow the user to select the direction from which the lock is to be accessible.

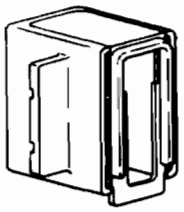

a. Determine the attitude of the hasp liner and cover assy. by holding units against the scuttle as shown.

b. After trial assembly, weld the liner to the cover as shown (only use the welding rod provided or specified in this document. Strength and security capabilities will be seriously impaired if a non-certified rod is used.)

WELDING ROD SPEC.

STAINLESS STEEL TYPE E, CLASS I
310-16 3/32 DIA.
AWS A5.4 PER MIL-E-22200/2

FIGURE 2. Installation procedures for watertight scuttles, style 4.

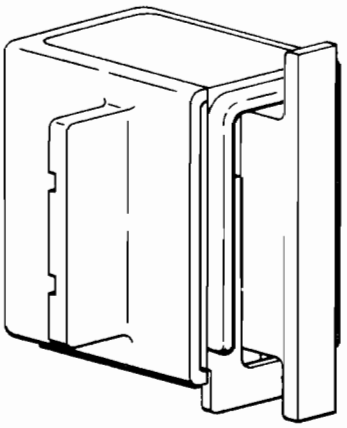

Hasp shown with liner, tang,cover and packaging (as shipped from manufacturer.)

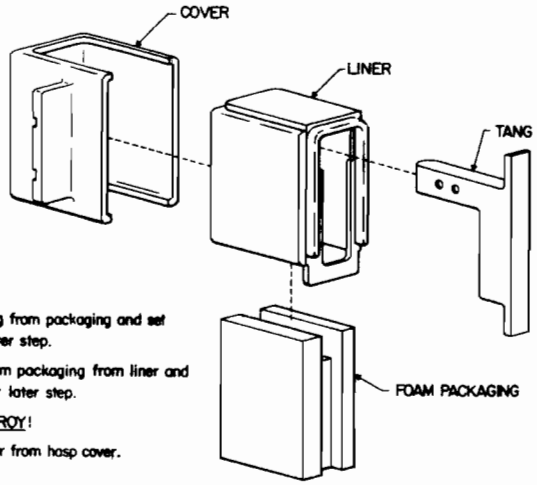

Step 1

a. Remove tang from packaging and set aside for later step.

b. Remove foam packaging from liner and set aside for later step.

DO NOT DESTROY!

c. Remove liner from hasp cover.

Step 3

Remove watertight gasket to prevent damage from welding heat or replace gasket after welding.

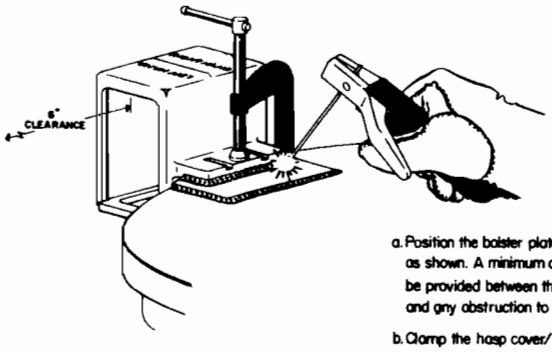

Step 4

General:

To strengthen the scuttle, a bolster plate has been provided. This plate will be fully welded to the scuttle face. The hasp cover/liner assembly will then be welded to it.

a. Position the bolster plate and hasp cover/liner assy. as shown. A minimum of 6 inches of clearance mus be provided between the open locking end of the ha and any obstruction to allow removal of the lock.

b. Clamp the hasp cover/liner assy. in place.

c. Weld the bolster plate to the door face as shown.

d. Weld the hasp cover/liner assy. to the bolster plate.

e. Remove clamp and allow welds to air cool.

Step 5

Reinstall gasket.

SH 131797

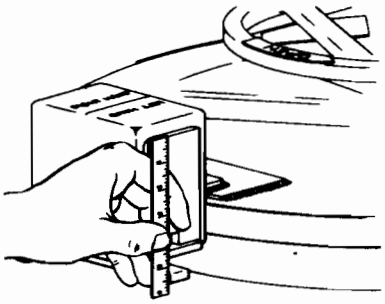

Step 6 (cont.)

c. Close and dog scuttle.

d. Measure space between tang and coaming, hatch or deck.

e. Fill any space greater than 1/8" with shim plates provided. The tang may be adjusted up to 1/8" but any more must be shimmed!

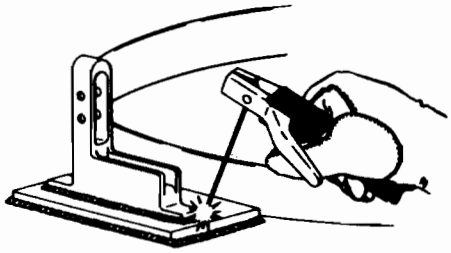

f. Weld shim plate to coaming, hatch or deck.

g. Tack weld top and bottom of tang flanges.

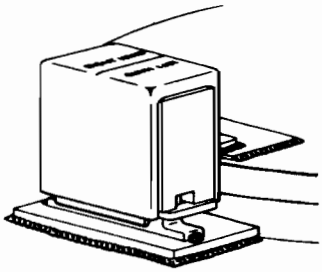

Step 6 (cont.)

h. Open door leaving tang attached to coaming, hatch or deck.

i. Finish welding tang as shown. Allow welds to air cool.

j Remove foam packaging from cover/liner and discard.

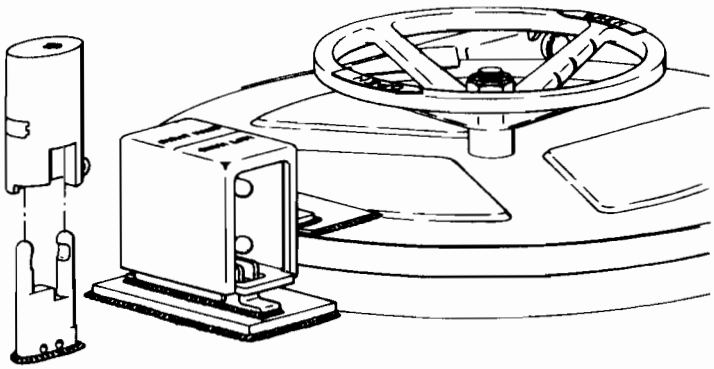

Step 8

General:

A second set of shackle pins are provided to allow the lock to be stored outside the hasp. This set of pins may be installed anywhere on the scuttle, hatch or deck at the discretion of the operating personnel.

a. Hold or clamp shackle pins to selected surface.

b. Weld pins in place.

FIGURE 2. Installation procedures for watertight scuttles, style 4. - Continued

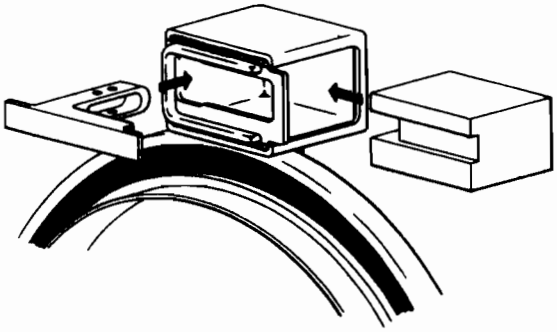

Step 6

The hasp is designed to provide a large degree of hasp/lock flexibility. Correct installation of the tang is important to insuring the maximum of flexibility.

a. Reinsert the foam packaging into the liner as shown.

b. Reinsert the tang into the packaging.

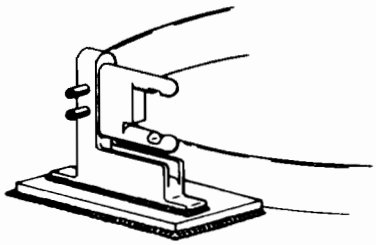

Step 7

General:

The hasp is designed to be used with one of two locks – The Sargent and Greenleaf Inc., 826C and 831B. Either lock meets the high security requirements when used with the hasp. Both require their shackles to be removed

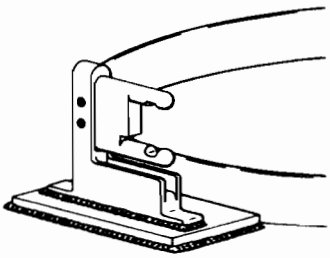

(by a locksmith.) The long set of pins may be used with either lock. The short set must be used with the 826C.

a. Insert the set of pins selected into the tang as shown and drive in locking pins.

SH 131797

MILITARY SPECIFICATION SHEET

HASP, HIGH SECURITY, SHROUDED FOR SHIPBOARD DOORS AND HATCHES USING HIGH AND MEDIUM SECURITY PADLOCK, STYLE 5

This specification sheet is approved for use by the Naval Sea Systems Command, Department of the Navy, and is available for use by all Departments and Agencies of the Department of Defense.

The complete requirements for acquiring the hasp described herein shall consist of this document and the latest issue of MIL-H-24653(SH).

REQUIREMENTS:

The configuration and marking requirements applicable to style 5 hasp shall conform to figure 1.

Installation instructions: Each hasp assembly shall be furnished with installation instructions shown on figure 2.

Preparing activity:
Navy - SH
(Project 5340-N083)

FSC 5340

☆U.S. GOVERNMENT PRINTING OFFICE: 1985—505-038/22528

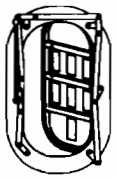

6 DOG QUICK ACTING WATERTIGHT DOOR
SWINGING INWARD

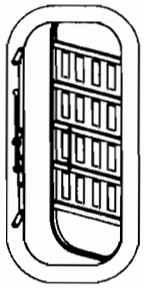

3 DOG AIRTIGHT GANG OPERATED DOOR
SWINGING INWARD

FIGURE 1. Configuration for left-hand or right-hand hinged quick acting watertight doors swinging in to open, style 5.

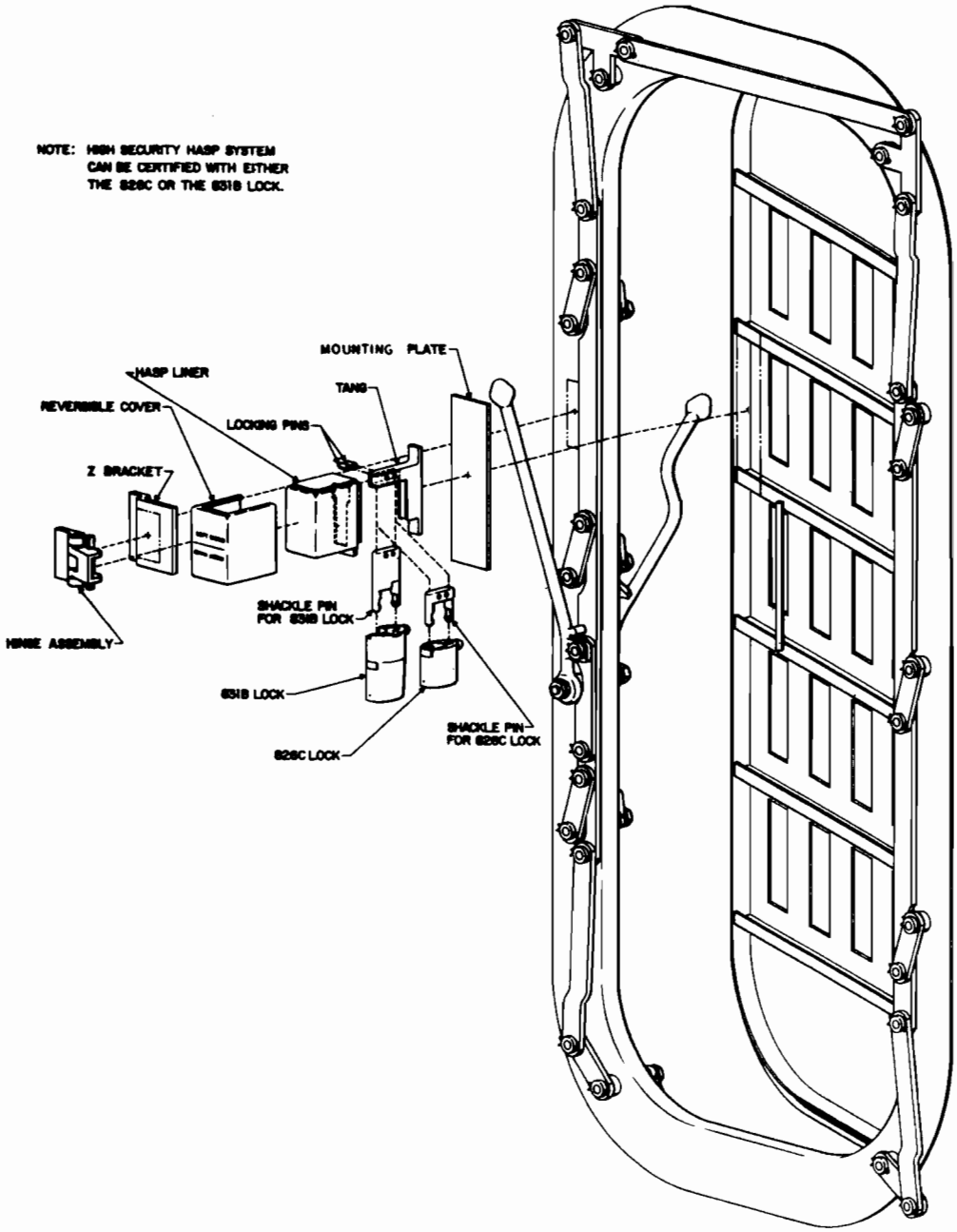

10 DOG QUICK ACTING WATERTIGHT DOOR
INWARD SWINGING

SH 131790

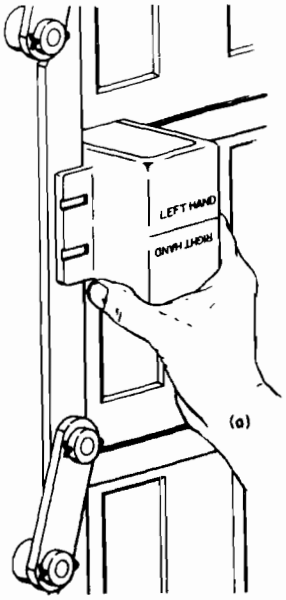

Step 2

General:

The hasp cover is reversible. Its final configuration must be determined during installation. The attitude of the liner within the hasp cover produces the left-hand or right-hand configuration. Figure (a) shows the hasp and liner in the left hand mode. For use with inward swinging doors, the hasp cover and liner will be welded to a hinge assembly which will in turn be welded to the coaming. This procedure is therefore opposite of that for outward swinging doors. The hasp in its left-hand mode will be welded to the left-hand coaming. The hasp in its right-hand mode will be welded to the right-hand coaming as it would appear from the side of the door, which contains the mechanical dog linkage.

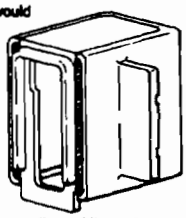

a. Determine the attitude of hasp liner and cover assy. by holding units against the door coaming as shown.

b. After trial assembly, weld the liner to the cover as shown (only use the welding rod provided in this document. Strength and security capabilities will be seriously impaired if a non-certified rod is used.)

Step 5

Weld hinge/hasp assembly to Z-bracket in a horizontal position, maintaining the 1 inch dimension shown.

FIGURE 2. Installation procedures for left-hand or right-hand hinged quick acting watertight doors swinging in to open, style 5.

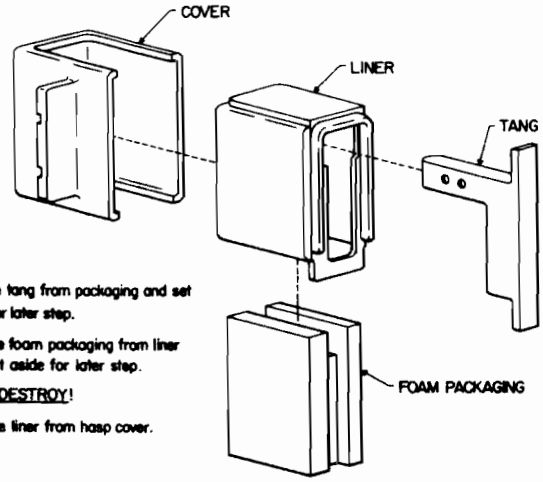

Step 1

a. Remove tang from packaging and set aside for later step.

b. Remove foam packaging from liner and set aside for later step.

DO NOT DESTROY!

c. Remove liner from hasp cover.

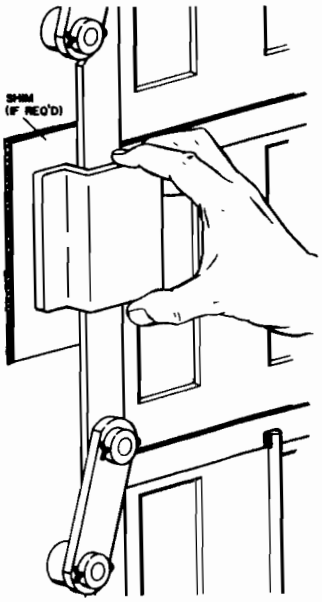

Step 4

General:

The presence of the quick acting dog mechanism on the side of the door where the hasp is to be mounted requires the use of special hardware. This will consist of a Z-bracket to bridge over the mechanism and a plate to mount the tang to the back side of the door.

a. Undog door to full open position.

b. Locate Z-bracket as shown so that it rests against quick acting mechanism but does not interfere with its operation. Rotate operator to determine maximum movement of linkages.

c. Shim(s) may be inserted between the door frame and the Z-bracket to maintain a minimum of 1/8" clearance between operator linkage and Z-bracket throughout the entire operational cycle. If shim(s) are required, weld shims to door frame.

WELDING ROD SPEC.

STAINLESS STEEL TYPE E, CLASS I
310-16 3/32 DIA.
AWS A5.4 PER MIL-E-22200/2

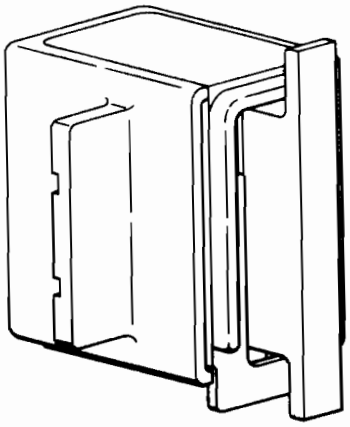

Hasp shown with liner, tang,cover and packaging
(as shipped from manufacturer.)

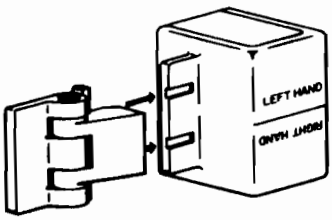

Step 3

General:

The use of a hinge assembly permits the hasp to be swung out of the door clear opening with the lock removed and after the door is opened. The door must first be opened because of the limited turning radius of the hinge assembly and the tang/liner interference that results.

a. Locate hinge assy. so that covered portion fits into grooves provided in the flange of the hasp cover.

b. Weld hinge assembly to hasp cover as shown.

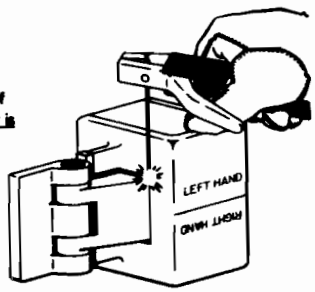

SH 131798

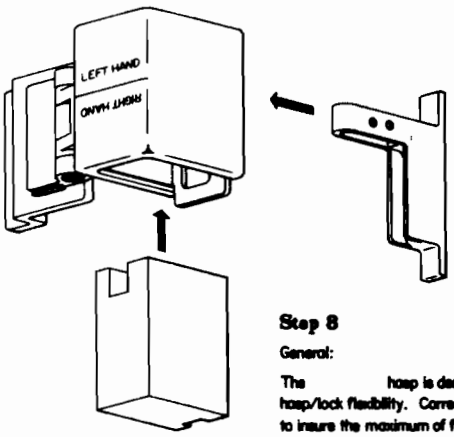

Step 8

General:

The hasp is designed to provide a large degree of hasp/lock flexibility. Correct installation of the tang is important to insure the maximum of flexibility.

a. Reinsert the foam packaging into the liner as shown.

b. Reinsert the tang into the packaging.

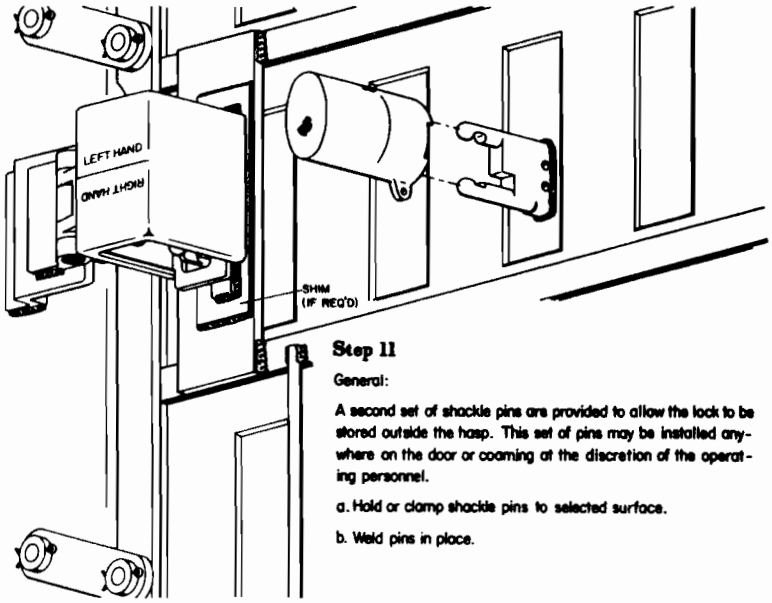

Step 11

General:

A second set of shackle pins are provided to allow the lock to be stored outside the hasp. This set of pins may be installed anywhere on the door or coaming at the discretion of the operating personnel.

a. Hold or clamp shackle pins to selected surface.

b. Weld pins in place.

FIGURE 2. Installation procedures for left-hand or right-hand hinged quick acting watertight doors swinging in to open, style 5. - Continued

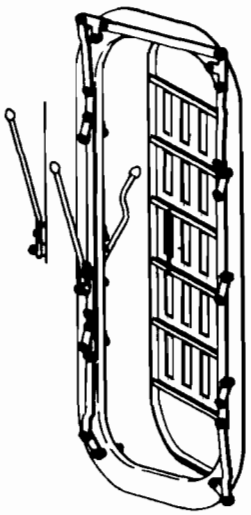

BEFORE

Step 6

The door handle must be removed and bent as shown. This will allow the door handle to clear the hasp/hinge assembly during operation of the quick acting watertight mechanism.

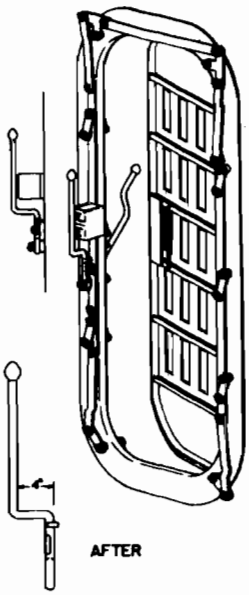

AFTER

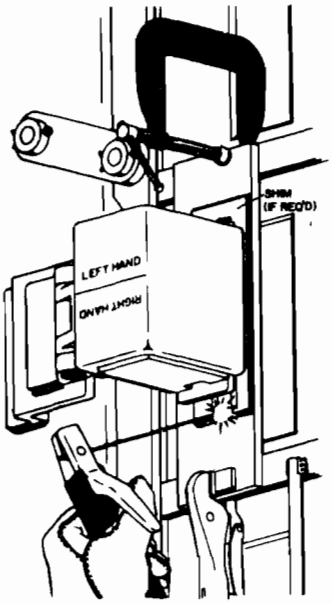

Step 9

a. Locate and clamp tang mounting plate to door superstructure. With the hasp parallel to the door face, fill any space between tang and plate greater than 1/8" with shim plates provided. The tang may be adjusted up to 1/8" but any more must be shimmed!

b. Weld shim plate to mounting plate (if required).

c. Tack weld top and bottom of tang flange to the mounting plate.

d. Mark plate location on door.

e. Remove mounting plate/tang assembly and finish welding tang to mounting plate (recommend welding in the horizontal position).

f. Remove foam packaging from liner and discard.

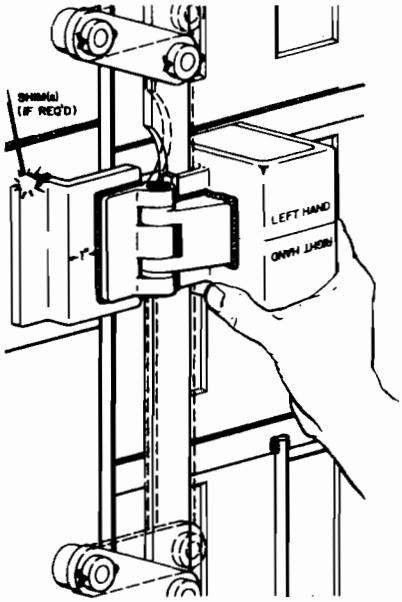

Step 7

a. Locate Z-bracket on frame as shown. Z-bracket/hinge/hasp assembly should be parallel to door stiffeners.

b. Undog door and verify that assembly does not contact quick acting mechanism during the process.

c. Tack weld the Z-bracket to the door frame, as shown.

d. Rotate the quick acting mechanism through a complete cycle, to assure clearance between the Z-bracket and mechanism.

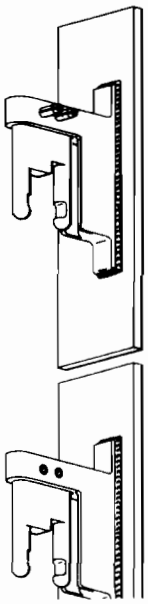

Step 10

General:

The hasp is designed to be used with one of two locks — the Sargent and Greenleaf, Inc., 826C and 813B. Either lock meets the high security requirements when used with the hasp. Both require their shackles to be removed (by a locksmith). The long set of pins may be used with either lock. The short set must be used with the 826C.

a. Insert the set of pins selected into the tang and drive in locking pins.

b. Reposition mounting plate/tang assembly and clamp the assembly to the door as previously marked.

c. Close and dog the door. With hasp body encompassing the shackle pins, assemble 831B or 826C lock, as appropriate, to the shackle pins. Assure that there is no interference between the lock body and the hasp body during the locking process, or between the tang and hasp liner while opening and closing the door. Interference may be eliminated by adjusting the mounting plate on the door so that the shackle pins/tang assembly is centered in the opening in the back side of the hasp liner.

d. Undog door and cycle door, hasp, quick acting watertight mechanism and lock through several operational cycles. When operation of the units is satisfactory, i.e., (1) no interferences upon door closure/opening either door to hasp or quick acting watertight mechanism to hasp or (2) no interference upon assembly/disassembly of the lock body.

e. Full weld Z-bracket to door frame.

f. Repeat steps c. and d. above.

g. The mounting plate should be welded securely to door stiffeners.

MILITARY SPECIFICATION SHEET

HASP, HIGH SECURITY, SHROUDED FOR SHIPBOARD DOORS AND HATCHES USING HIGH AND MEDIUM SECURITY PADLOCK, STYLE 6

This specification sheet is approved for use by the Naval Sea Systems Command, Department of the Navy, and is available for use by all Departments and Agencies of the Department of Defense.

The complete requirements for acquiring the hasp described herein shall consist of this document and the latest issue of MIL-H-24653(SH).

REQUIREMENTS:

The configuration and marking requirements applicable to style 6 hasp shall conform to figure 1.

Installation instructions: Each hasp assembly shall be furnished with installation instructions shown on figure 2.

Preparing activity:
Navy - SH
(Project 5340-N087)

FSC 5340

☆U.S. GOVERNMENT PRINTING OFFICE: 1985—505-038/22529

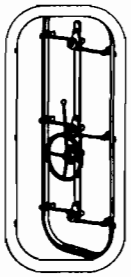

INWARD SWINGING WATERTIGHT DOOR
SLIDING DOG TYPE

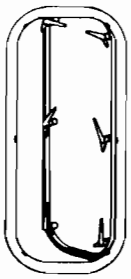

INWARD SWINGING WATERTIGHT DOOR

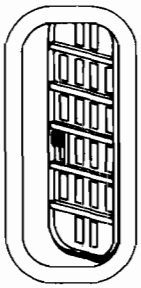

INWARD SWINGING WATERTIGHT DOOR

FIGURE 1. Configuration for left-hand or right-hand hinged swinging in to open, style 6.

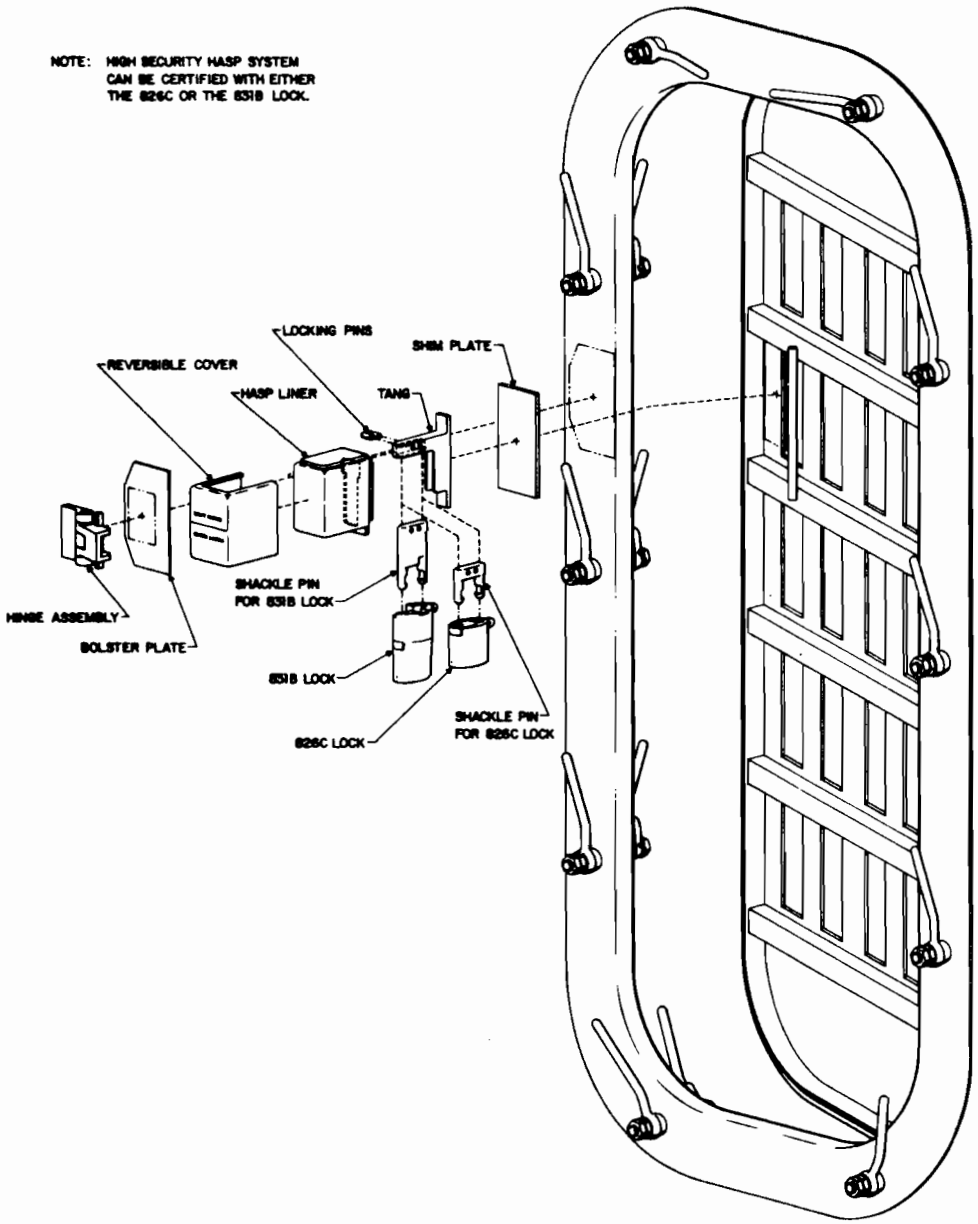

INDIVIDUALLY DOGGED INWARD
SWINGING WATERTIGHT DOOR

SH 131791

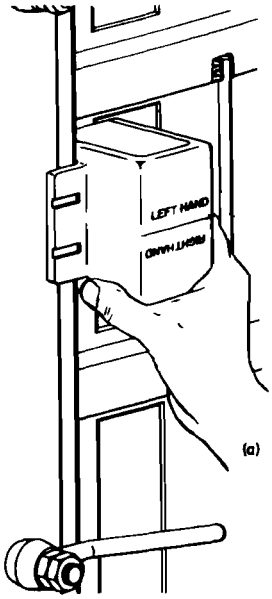

Step 2

General:

The hasp cover is reversible. Its final configuration must be determined during installation. The attitude of the liner within the hasp cover produces the left-hand or right-hand configuration. Figure (a) shows the hasp and liner in the left-hand mode. For use with inward swinging doors, the hasp cover and liner will be welded to the coaming. This procedure is therefore opposite of that for outward swinging doors. The hasp in its left-hand mode will be welded to the left-hand coaming. The hasp in its right-hand mode will be welded to the right-hand coaming.

a. Determine the attitude of hasp liner and cover assy. by holding units against the door coaming as shown.

b. After trial assembly, weld the liner to the cover as shown.

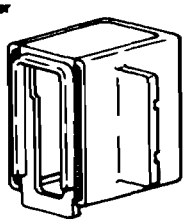

(only use the welding rod provided or certified in this document. Strength and security capabilities will be seriously impaired if a non-certified rod is used.)

WELDING ROD SPEC.

STAINLESS STEEL TYPE E, CLASS I
310-16 3/32 DIA.
AWS A5.4 PER MIL-E-22200/2

FIGURE 2. Installation procedures for left-hand or right-hand hinged doors swinging in to open, style 6.

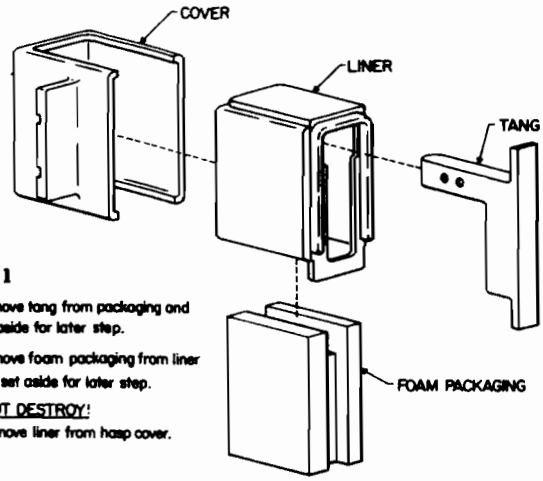

Step 1

a. Remove tang from packaging and set aside for later step.

b. Remove foam packaging from liner and set aside for later step.

DO NOT DESTROY!

c. Remove liner from hasp cover.

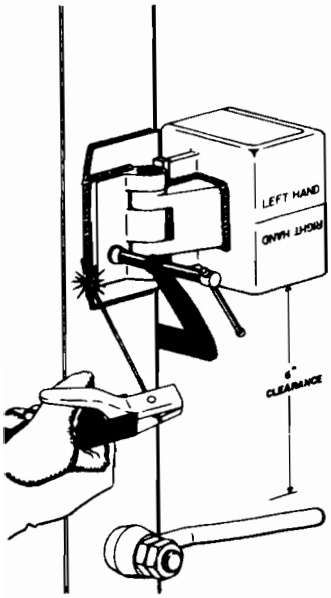

Step 4

General:

To provide a correctly aligned hasp, a bolster plate has been provided. This plate will be fully welded to the door coaming. The hasp cover/liner assembly will then be welded to it.

a. Position the bolster plate, the hinge and cover/liner assembly as shown. A minimum of 6 inches of clearance must be provided between the open locking end of the hasp and any obstruction to allow removal of the lock.

b. Clamp the plate and hasp cover/liner assy. in place.

c. Weld the bolster plate to the coaming as shown.

d. Weld the hinge and hasp cover/liner assy. to the bolster plate.

e. Remove clamp and allow welds to air cool.

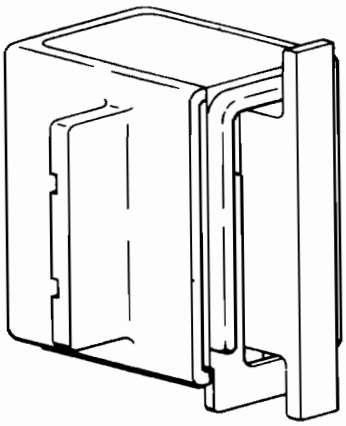

Hasp shown with liner, tang, cover and packaging
(as shipped from manufacturer.)

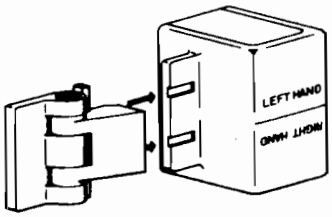

Step 3

General:

The use of the hinge assembly permits the hasp to be swung out of the door clear opening with the lock removed and after the door is opened. The door must first be opened because of the limited turning radius of the hinge assembly and the tang/liner interference that results.

a. Locate hinge assembly so that covered portion fits into grooves provided in the flange of the hasp cover.

b. Weld hinge assembly to hasp cover as shown.

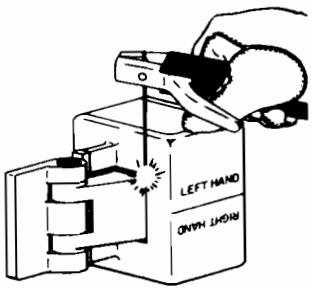

SH 131799

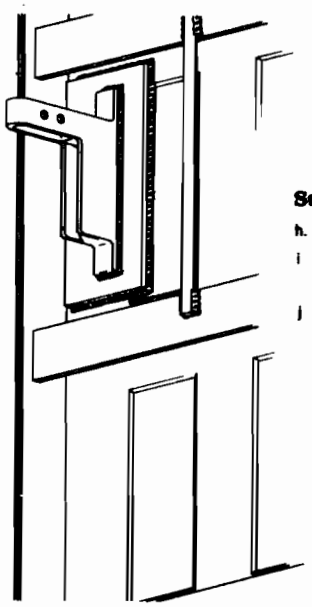

Step 5 (cont.)

h. Open door leaving tang attached.

i Finish welding tang to door as shown. Allow welds to air cool.

j Remove foam packaging from cover/liner and discard.

FIGURE 2. Installation procedures for left-hand or right-hand hinged doors swinging in to open, style 6. - Continued

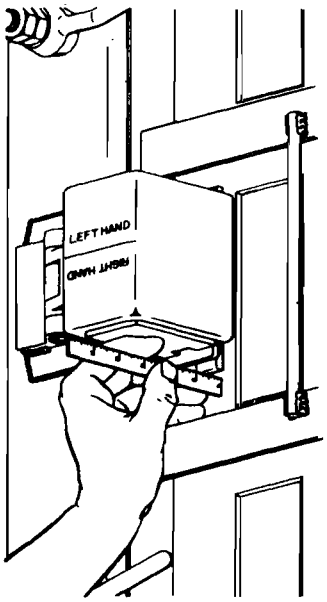

Step 5 (cont.)

c. Close and secure door.

d. Swing hasp cover/liner assy. into position in door opening and measure distance from the tang flange to the facing door surface.

e. Fill any space greater than 1/8" with shim plates provided. The tang may be adjusted up to 1/8" but any more must be shimmed.

f. Weld shim plate to door.

g. Tack weld top and bottom of tang flanges.

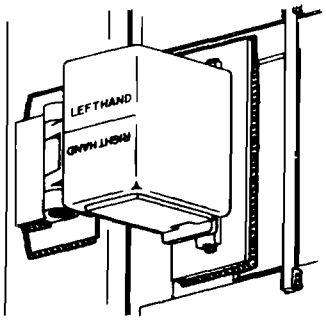

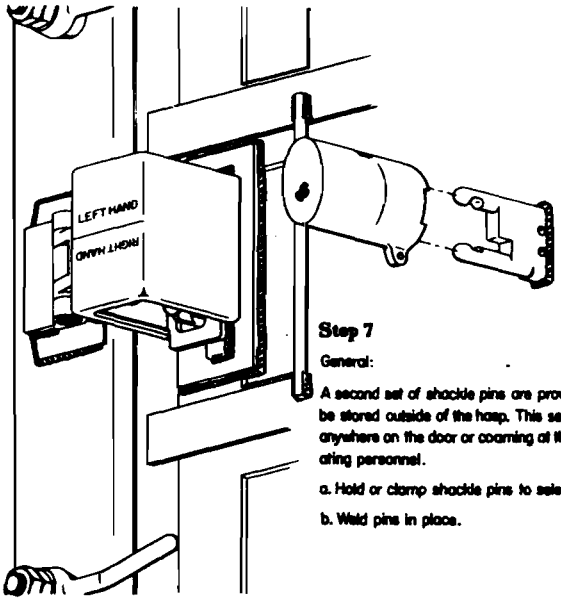

Step 7

General:

A second set of shackle pins are provided to allow the lock to be stored outside of the hasp. This set of pins may be installed anywhere on the door or coaming at the discretion of the operating personnel.

a. Hold or clamp shackle pins to selected surface.

b. Weld pins in place.

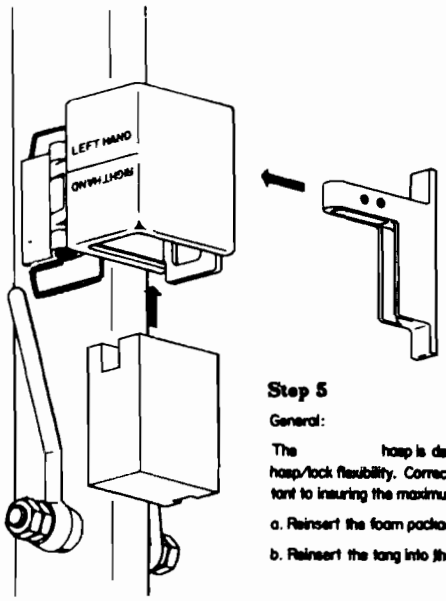

Step 5

General:

The hasp is designed to provide a large degree of hasp/lock flexibility. Correct installation of the tang is important to insuring the maximum flexibility.

a. Reinsert the foam packaging into the liner as shown.

b. Reinsert the tang into the packaging.

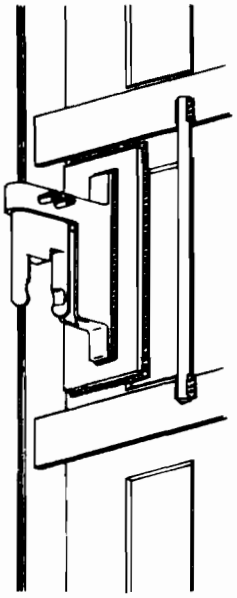

Step 6

General:

The hasp is designed to be used with one of two locks- the Sargent and Greenleaf Inc., 826C and 831B. Either lock meets the high security requirements when used with the hasp. Both require their shackles to be removed (by a locksmith.) The long set of pins may be used with the 826C or 831B, but the short pins must be used with the 826C.

a. Insert the set of pins selected into the tang as shown and drive in locking pins.

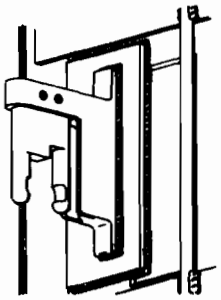

SH 131799