UFC 4-024-01
10 June 2008

UNIFIED FACILITIES CRITERIA (UFC)

SECURITY ENGINEERING: PROCEDURES FOR DESIGNING AIRBORNE CHEMICAL, BIOLOGICAL, AND RADIOLOGICAL PROTECTION FOR BUILDINGS

APPROVED FOR PUBLIC RELEASE; DISTRIBUTION UNLIMITED

UNIFIED FACILITIES CRITERIA (UFC)

SECURITY ENGINEERING: PROCEDURES FOR DESIGNING AIRBORNE CHEMICAL, BIOLOGICAL, AND RADIOLOGICAL PROTECTION FOR BUILDINGS

Any copyrighted material included in this UFC is identified at its point of use.
Use of the copyrighted material apart from this UFC must have the permission of the copyright holder.

U.S. ARMY CORPS OF ENGINEERS (Preparing Activity)

NAVAL FACILITIES ENGINEERING COMMAND

AIR FORCE CIVIL ENGINEER SUPPORT AGENCY

Record of Changes (changes are indicated by **1**\ ... /**1**/)

Change No.	**Date**	**Location**

FOREWORD

The Unified Facilities Criteria (UFC) system is prescribed by MIL-STD 3007 and provides planning, design, construction, sustainment, restoration, and modernization criteria, and applies to the Military Departments, the Defense Agencies, and the DoD Field Activities in accordance with USD (AT&L) Memorandum dated 29 May 2002. UFC will be used for all DoD projects and work for other customers where appropriate. All construction outside the United States is also governed by Status of Forces Agreements (SOFA), Host Nation Funded Construction Agreements (HNFA), and in some instances, Bilateral Infrastructure Agreements (BIA). Therefore, the acquisition team must ensure compliance with the more stringent of the UFC, the SOFA, the HNFA, and the BIA, as applicable.

UFC are living documents and will be periodically reviewed, updated, and made available to users as part of the Services' responsibility for providing technical criteria for military construction. Headquarters, U.S. Army Corps of Engineers (HQUSACE), Naval Facilities Engineering Command (NAVFAC), and Air Force Civil Engineer Support Agency (AFCESA) are responsible for administration of the UFC system. Defense agencies should contact the preparing service for document interpretation and improvements. Technical content of UFC is the responsibility of the cognizant DoD working group. Recommended changes with supporting rationale should be sent to the respective service proponent office by the following electronic form: Criteria Change Request (CCR). The form is also accessible from the Internet sites listed below.

UFC are effective upon issuance and are distributed only in electronic media from the following sources:

- Whole Building Design Guide web site http://dod.wbdg.org/.

Hard copies of UFC printed from electronic media should be checked against the current electronic version prior to use to ensure that they are current.

AUTHORIZED BY:

JAMES C. DALTON, P.E.
Chief, Engineering and Construction Division
U.S. Army Corps of Engineers

JOSEPH E. GOTT, P.E.
Chief Engineer
Naval Facilities Engineering Command

PAUL A PARKER
The Deputy Civil Engineer
DCS/Installations & Logistics
Department of the Air Force

Dr. GET W. MOY, P.E.
Director, Installations Requirements and Management
Office of the Deputy Under Secretary of Defense (Installations and Environment)

STANLEY A. ENATSKY, P.E.
Joint Project Manager for Collective Protection
Joint Program Executive Office for Chemical Biological Defense

UNIFIED FACILITIES CRITERIA (UFC)
NEW DOCUMENT SUMMARY SHEET

Subject: UFC 4-024-01, Security Engineering: Procedures for Designing Airborne Chemical, Biological, and Radiological Protection for Buildings

Document Description and Need:

- **Purpose:** The purpose of this manual is to provide design guidance to protect assets against airborne chemical, biological, and radiological (CBR) agents. The guidance includes recommended protective measures, filtration system types and arrangements, protective area overpressure, and collective protection (ColPro) system design and equipment. This manual provides design criteria to protect assets based on the level of protection, which ranges from very low to high, depending on the design basis threat and the value of potential target assets. The design criteria apply to CBR protection of personnel and mission-essential equipment located in new or existing facilities.

- **Application and Use**: The design guidance in this manual is not applicable to facilities that require only the DoD Minimum Standards for asset protection. The "Design Criteria Development Procedure" described in UFC 4-020-01 "DoD Security Engineering Facilities Planning Manual" will dictate whether this manual should be utilized. The intended audience consists of:
  - Engineers who design new facilities or retrofit existing facilities
  - Building managers
  - Security personnel
  - Emergency managers
  - CBR protection personnel
  - Personnel who are deploying to field or theater areas and are tasked with providing the commander with recommendations for immediate protection

- **Need:** This document does not meet the strict "requirements only" formatting as dictated by UFC 1-300-01 "Criteria Format Standard". The extensive detail in this manual is required due to the lack of commercial design information available on the subject and the limited application of this specialized guidance. This manual is one of a series of Unified Facilities Criteria that cover minimum standards, planning, preliminary design, and detailed design for security and antiterrorism. The manuals in this series are designed for sequential use by a diverse audience to facilitate development of projects throughout the design cycle. The manuals in this series include the following:

  - UFC 4-010-01: DoD Minimum Antiterrorism Standards for Buildings

- UFC 4-020-01: Security Engineering Facilities Planning Manual
- UFC 4-020-02: Security Engineering Facilities Design Manual
- Security Engineering Support Manuals (This category includes UFC 4-024-01.)

Impacts:

- This manual creates a single-source reference for the design of protection systems for buildings against airborne CBR hazards that are the result of a terrorist attack, industrial accident or intentional release of CBR agents either external or internal to the facility. Facility protection and design criteria for CBR protection of facilities intended for wartme operations and long-duration events is addressed in UFC 3-340-01, Design and Analysis of Hardened Structures to Conventional Weapons Effects (FOUO).

- Building protection systems for CBR agents include means to prevent and limit the impact of an attack and can provide a ColPro area of the building where personnel can work or shelter during release of a CBR agent.

- The application of the guidance in this document will significantly impact the project cost for a facility depending on the level of protection required. Designs to a high level of protection can increase first costs as much as 30%.

- UFC 4-024-01 has no adverse impacts on environmental or constructability policies or practices. Sustainment costs and energy usage will be increased by application of this guidance.

- Impacts on Services (Army and Navy):

  - Department of Army: The Army Corps of Engineers released Engineering Technical Letter (ETL) 1110-3-498, Design of Collective Protection Shelters to Resist Chemical, Biological and Radiological (CBR) Agents in February 1999. This ETL was used to develop UFC 4-024-01, which will supersede the ETL.

  - Department of Navy – Marine Corps: The Navy developed Military Handbook MIL-HDBK-1040, Basic Guidelines for Chemical Warfare Hardening of New Military Facilities in February 1989. That handbook was converted to UFC 3-340-13 in January 2004. UFC 4-024-01 will supersede UFC 3-340-13.

CONTENTS

Page

CHAPTER 1 INTRODUCTION 1-1

Paragraph 1-1 BACKGROUND 1-1
1-2 PURPOSE 1-1
1-3 SCOPE 1-2
1-3.1 Body 1-2
1-3.2 Appendices 1-2
1-4 REFERENCES 1-3
1-5 SECURITY ENGINEERING UFC SERIES 1-3
1-5.1 DoD Minimum Antiterrorism Standards for Buildings 1-3
1-5.2 Security Engineering Planning Manual 1-3
1-5.3 Security Engineering Design Manual 1-3
1-5.4 Security Engineering Support Manuals 1-4
1-5.5 Design Examples for Airborne CBR Protection for Buildings 1-4
1-5.6 Manual for CBR Protection of Wartime Facilities 1-4
1-6 ADDITIONAL GUIDANCE 1-4

CHAPTER 2 ASSUMPTIONS AND DESIGN CONSTRAINTS 2-1

Paragraph 2-1 ASSUMPTIONS 2-1
2-2 CONSTRAINTS 2-1

CHAPTER 3 TECHNICAL REQUIREMENTS AND GUIDANCE 3-1

Paragraph 3-1 CBR PROTECTION DESIGN PROCESS 3-1
3-1.1 Assessment Phase 3-1
3-1.2 Planning and Design Phase 3-2
3-2 FACILITY CONSTRUCTION TYPES 3-2
3-2.1 General 3-2
3-2.2 New Facilities 3-2
3-2.3 Retrofits 3-2
3-2.4 Expeditionary Shelters and Equipment 3-3
3-3 THREAT TYPE 3-3
3-3.1 Agent Types 3-3
3-3.2 Airborne Delivery Tactics 3-4
3-3.3 Design Basis Threat 3-5
3-4 FACILITY DESIGN STRATEGY FOR CBR PROTECTION 3-6
3-4.1 General 3-6
3-4.2 Protection from External Release 3-6
3-4.3 Protection from Internal Release 3-6
3-5 LEVELS OF PROTECTION 3-8
3-5.1 Very Low Level of Protection (Sheltering in Place) 3-8
3-5.2 Recommended Protection Measures for All Levels of Protection 3-13
3-5.3 Low Level of Protection 3-18
3-5.4 Medium Level of Protection 3-22
3-5.5 High Level of Protection 3-25

3-6 DURATION OF AN EVENT AND CLASSES OF OVERPRESSURE 3-27

3-6.1 Duration of an Event 3-27
3-6.2 Overpressure Classification 3-27
3-7 BUILDING PROTECTION SUMMARY 3-30
3-8 DESIGN OF THE COLLECTIVE PROTECTION SYSTEM 3-31
3-8.1 Design Approach 3-31
3-8.2 Envelope Leakage Rate 3-31
3-8.3 HVAC Requirements 3-32
3-8.4 Ductwork 3-33
3-8.5 Doors and Windows 3-34
3-8.6 ColPro Filtration System Design 3-34
3-8.7 Standby Collective Protection Control System and Operational Requirements 3-37
3-9 DESIGN CONSIDERATIONS FOR BUILDING DECONTAMINATION 3-38
3-9.1 Retention of CBR Agents Released into a Building 3-38
3-9.2 Decontamination Measures 3-38
3-9.3 Design Objectives 3-39

CHAPTER 4 STARTUP, OPERATION, AND MAINTENANCE OF THE COLPRO SYSTEM 4-1

Paragraph 4-1 STARTUP OF COLPRO SYSTEM 4-1
4-1.1 Airflow Balancing 4-1
4-1.2 Initial ColPro Filtration System Filter Bank In-Place Testing 4-1
4-1.3 Performance Testing 4-1
4-2 COLPRO SYSTEM OPERATIONAL TESTING 4-1
4-3 COLPRO FILTRATION SYSTEM 4-1
4-3.1 Airflow Testing 4-1
4-3.2 Subsequent ColPro Filtration System Filter Bank In-Place Testing 4-2
4-3.3 Testing Cost 4-2
4-4 IDENTIFICATION OF PROTECTIVE AREA 4-2
4-5 TRAINING 4-2
4-6 OPERATING INSTRUCTIONS 4-2
4-7 OPERATION AND MAINTENANCE MANUAL 4-2
4-8 FILTER REPLACEMENT 4-2
4-8.1 Carbon Adsorber Replacement 4-2
4-8.2 HEPA Filter Replacement 4-3

APPENDIX A REFERENCES A-1

APPENDIX B GLOSSARY B-1

APPENDIX C AIRLOCKS AND ENTRY OR EXIT PROCESSING C-1

APPENDIX D SHELTERING IN PLACE D-1

APPENDIX E PROTECTIVE ACTION PLAN: OPERATIONAL PROCEDURES TO PROTECT EXISTING BUILDINGS AND THEIR OCCUPANTS FROM AIRBORNE HAZARDS E-1

APPENDIX F DETERMINING THE BUILDING PROTECTION FACTOR F-1

APPENDIX G COLPRO FILTRATION SYSTEM EQUIPMENT G-1

APPENDIX H COLPRO FILTRATION SYSTEM TESTING REQUIREMENTSH-1

FIGURES

Figure Title

3-1 Very Low Level of Protection – Central Air-Handling System..... 3-10
3-2 Very Low Level of Protection – Local Air-Handling System Requiring Continuous Operation 3-11
3-3 Very Low Level of Protection – Fan Coil System 3-12
3-4 All Levels of Protection – Dedicated Air-Handling System for Mailrooms..... 3-13
3-5 Very Low Level of Protection – Lobby Area Ventilation Containment System 3-16
3-6 Low Level of Protection – Central Air-Handling System 3-20
3-7 Low Level of Protection – Fan Coil System..... 3-21
3-8 Medium Level of Protection – Central Air-Handling System – Unprotected Mechanical Room 3-23
3-9 Medium Level of Protection – Central Air-Handling System – Protected Mechanical Room 3-24
3-10 Medium Level of Protection – Fan Coil System..... 3-25
3-11 High Level of Protection – Air-Handling System with Integral Filtration..... 3-26

TABLES

Table Title

3-1 Airborne Contamination Threats 3-5
3-2 FEMA Tornado and Hurricane and NFPA 101 *Life Safety Code*® Requirements..... 3-18
3-3 Overpressure, by Class..... 3-28
3-4 Building Overpressure Unit Leakage Rates* 3-29
3-5 Building Protection Summary 3-30

CHAPTER 1

INTRODUCTION

1-1 BACKGROUND

Assets may require protection against airborne contamination by chemical, biological, or radiological (CBR) agents. The assets typically targeted by aggressors using CBR agents are personnel, mission-essential equipment, and facilities. Airborne delivery tactics involve the introduction of a CBR agent into an occupied building by an aggressor directly inserting the agent into the building's outside air intake for the ventilation system, releasing the agent at a standoff distance upwind of the building, or releasing an agent inside the building. Threats can come from a wartime or terrorist attack or from CBR agents released either accidentally or by sabotage. An airborne release involving a CBR agent and caused by an attack or release, either external or internal to the facility, is called a CBR event. The consequences of a CBR event can be of short duration (a few hours) or long duration (a number of days).

Protection can be achieved in several ways: (1) by evacuating the affected area, (2) by employing individual protective equipment (IPE) or personal protective equipment (PPE), (3) by providing sheltering in place, (4) by providing a collective protection (ColPro) area of the building, which has a ColPro filtration system and an overpressure and where personnel can work or shelter during release of a CBR agent. Response to a CBR event is dictated by the facility's emergency operation procedures. When evacuation is logistically impracticable, sheltering in place can provide limited protection for a short period. Increased protection and longer durations require either a pre-placed system to provide ColPro capability or IPE/PPE. In some cases, advance warning of a suspected CBR event will enable building occupants to increase survivability significantly and reduce injury or incapacitation by implementing basic contamination avoidance actions.

1-2 PURPOSE

The purpose of this document is to provide design guidance to protect assets against airborne delivery tactics using CBR agents. The guidance includes minimum requirements, recommended protective measures for all buildings, filtration system types and arrangements, protective area overpressure, and ColPro system design and equipment. The intended audience consists of:

- Engineers who design new facilities or retrofit existing facilities
- Building managers
- Security personnel
- Emergency managers
- CBR protection pesonnel
- Personnel who are deploying to field or theater areas and are tasked with providing the commander with recommendations for immediate protection

1-3 SCOPE

The scope of this document is limited to the threat of an airborne CBR terrorist attack and the accidental release of CBR agents. The intent is not to supersede or duplicate design guidance for fully hardened facilities. Consideration must be given to physical security or hardening of the building air protection systems if an explosive threat exists.

1-3.1 Body

The body of this document provides design criteria to protect assets based on the level of protection. The level of protection ranges from very low to high, depending on the value of potential target assets and the design basis threat. The design basis threat is defined as "the threat (aggressors, delivery tactics, and associated weapons, tools, or explosives) against which assets within the building must be protected and upon which the security engineering design of the building is based" (UFC 4-010-01, DoD Minimum Antiterrorism Standards for Buildings).

The design criteria apply to CBR protection of personnel and mission-essential equipment located in new facilities, in existing facilities either expediently or permanently retrofitted with CBR protection capabilities, and in temporary ColPro shelters. ColPro for CBR threats is intended to prevent personnel who are not using IPE/PPE from coming into direct contact with the agents or inhaling or ingesting them. Specifically, the guidance herein pertains to the following:

- Designing new facilities that are designated to have ColPro capability or are required to incorporate design features facilitating future installation of ColPro capability

- Modifying existing facilities designated to have ColPro capability

1-3.2 Appendices

The appendices include additional design guidance and other information, as follows:

- Appendix A – References (refer to Paragraph 1-4, below)

- Appendix B – Glossary, which provides definitions of the acronyms and abbreviations well as specialized terminology used in this document

- Appendix C – Airlocks and Entry or Exit Processing

- Appendix D – Sheltering in Place

- Appendix E – Protective Action Plan: Operational Procedures to Protect Existing Buildings and Their Occupants from Airborne Hazards

- Appendix F – Determining the Building Protection Factor

- Appendix G – ColPro Filtration System Equipment

- Appendix H – ColPro Filtration System Testing Requirements

1-4 REFERENCES

As noted in the preceding paragraph, Appendix A contains the references cited in this document. These are grouped into governmental and non-governmental sources.

1-5 SECURITY ENGINEERING UFC SERIES

This document is one in a series of security engineering UFC manuals that cover minimum standards, planning, preliminary design, and detailed design for security and antiterrorism. The manuals in this series are designed to be used sequentially by a diverse audience to facilitate the development of projects throughout the design cycle. Sources for obtaining UFC manuals are listed in the Foreword to this UFC manual. These manuals include the following.

1-5.1 DoD Minimum Antiterrorism Standards for Buildings

UFC 4-010-01, DoD Minimum Antiterrorism Standards for Buildings, and UFC 4-010-02, Design (FOUO): DoD Minimum Standoff Distances for Buildings, establish standards that provide minimum protection against terrorist attacks for the occupants of all inhabited DoD buildings. These UFC manuals are intended for use by security and antiterrorism personnel and design teams to identify the minimum requirements that must be incorporated into the design of all new construction and major renovations of inhabited DoD buildings. These manuals also include recommendations for optional incorporation in all such buildings.

1-5.2 Security Engineering Planning Manual

UFC 4-020-01, Security Engineering Planning Manual, presents the process for developing the design criteria that are necessary to incorporate security and antiterrorism into DoD facilities and identifying the cost implications of applying those design criteria. The design criteria may be limited to the requirements of the minimum standards, or they may include protection of assets (people) other than those addressed in the minimum standards, aggressor tactics not addressed in the minimum standards, or levels of protection beyond those required by the minimum standards. (Refer to Paragraph 3-1.1, Assessment Phase, which contains CBR-related design criteria.) The cost implications for security and antiterrorism are addressed as cost increases over conventional construction for common construction types. The changes in construction associated with those cost increases are tabulated for reference but are only representative of construction that will meet the design criteria. UFC 4-020-01 also includes a means to assess the tradeoffs between cost and risk. The intended audience consists of planners as well as security and antiterrorism personnel, with support from planning team members.

The commander or authority having jurisdiction may determine whether facilities are susceptible to a CBR threat and may choose to incorporate CBR protection that exceeds the criteria established by using the process in UFC 4-020-01.

1-5.3 Security Engineering Design Manual

UFC 4-020-02, Security Engineering Design Manual, provides interdisciplinary design guidance for developing preliminary systems of protective measures to implement the design criteria established using UFC 4-020-01. Those protective measures include the building and site elements, equipment, and supporting manpower and procedures necessary to make them all work as a system. The information is sufficiently detailed to

support concept-level project development and, as such, can provide a good basis for a more detailed design. This manual also describes how forced or covert entry might be used to deliver a CBR weapon and includes a process for assessing how protective measures impact risk. The primary audience is the design team, but security and antiterrorism personnel may also use this manual.

1-5.4 Security Engineering Support Manuals

In addition to the aforementioned UFC manuals regarding standards, planning, and design, there are UFC manuals that provide detailed design guidance for developing final designs based on the preliminary designs developed using UFC 4-020-02. These security engineering support manuals contain specialized, discipline-specific design guidance. Some address tactics, such as direct fire weapons, forced entry, or airborne delivery. Others address limited aspects of design, such as resistance to progressive collapse or design of portions of buildings such as mailrooms. Still others address details of designs for specific protective measures, such as vehicle barriers or fences. These support manuals are intended for use by the design team during the development of final design packages.

1-5.5 Design Examples for Airborne CBR Protection for Buildings

UFC 4-024-02, Security Engineering: Design Examples for Airborne Chemical, Biological, and Radiological Protection for Buildings, provides two examples for designing facilities to protect assets against airborne delivery tactics: a two-story administration building with a crisis management center requiring a medium level of protection and an existing command center requiring retrofitting to provide a medium level of protection.

1-5.6 Manual for CBR Protection of Wartime Facilities

UFC 3-340-01, Design and Analysis of Hardened Structures to Conventional Weapons Effects, contains design criteria for CBR protection of wartime facilities that incorporate contamination control areas (CCAs). This manual addresses many issues relating to wartime and long-duration events.

1-6 ADDITIONAL GUIDANCE

The following documents also applies to the use of temporary and transportable shelters for protecting personnel against CBR threats: Multiservice Tactics, Techniques, and Procedures for Nuclear, Biological, and Chemical (NBC) Protection (Army Publication FM 3-11.4 [FM 3-4], Marine Corps Publication MCWP 3-37.2, Navy Publication NTTP 3-11.27, and Air Force Publication AFTTP(I) 3-2.46) and Multiservice Tactics, Techniques, and Procedures for Nuclear, Biological, and Chemical Reconnaissance (Army Publication FM 3-11.19, Marine Corps Publication MCWP 3-37.4, Navy Publication NTTP 3-11.29, and Air Force Publication AFTTP(I) 3-2.44).

CHAPTER 2

ASSUMPTIONS AND DESIGN CONSTRAINTS

2-1 ASSUMPTIONS

The design criteria presented herein are based on the following assumptions:

1. A CBR event can occur without warning. There may be advance warning, however, such as a credible warning or a warning under elevated threat conditions. Advance warning allows operational actions to be taken to enhance protection.

2. Airborne delivery tactics include an external release of an agent (from an upwind standoff distance or into a fresh air intake) and an internal release (through the ventilation system or into a building area).

3. Actions such as heightened security measures taken as a result of increased levels of Force Protection Conditions are appropriate for protection against CBR events. Force Protection Conditions are a set of specific security measures promulgated by the commander after considering a variety of factors including the design basis threat, current events that might increase the risk of a terrorist attack, and observed suspicious activities.

4. This document does not address the use of explosives or other weapons in conjunction with a CBR event.

2-2 CONSTRAINTS

Certain physical features that cannot be changed or altered by facility personnel are constraints to protection in case of CBR events. Examples are as follows:

- Facility location adjacent to an area where public access is uncontrolled – The facility may be located near roads and railroad tracks where trucks and trains carry toxic industrial chemicals (TICs) or toxic industrial materials (TIMs).

- Facility with neighboring businesses or airport – A business adjacent to the facility may manufacture or store TICs or TIMs, making the facility vulnerable to accidental leaks or sabotage of the chemical storage facility. Aircraft may frequently fly near the facility because of a neighboring general aviation airport, rendering the facility vulnerable to an aerial release.

CHAPTER 3

TECHNICAL REQUIREMENTS AND GUIDANCE

3-1 CBR PROTECTION DESIGN PROCESS

The CBR protection design process consists of two major phases: (1) assessment and (2) planning and design.

3-1.1 Assessment Phase

To successfully provide ColPro capability and counter CBR threats, it is essential to understand the agent types and their physical states, potential delivery tactics, and the effects of the agents. The different types and physical states of contamination cause different hazards and may require different ColPro methods. Therefore, the assessment phase includes the following tasks:

- Identify the potential target assets and rank their value. The assets addressed in this document generally are personnel in a facility or group of facilities and mission-essential equipment that may become unusable as a result of contamination.

- Determine the probable aggressor(s), agent type(s), and delivery tactic(s). The agent type and quantity, delivery tactic, release location, and duration of the event are difficult to estimate. Nevertheless, the planning team or facility user must define or estimate these in order for the designer to determine the design basis threat and the level of protection for the facility.

- Determine the design basis threat (refer to Paragraph 3-3.3, Design Basis Threat).

- Determine the appropriate level of protection (refer to Paragraph 3-5, Levels of Protection).

- Determine the appropriate overpressure class (refer to Paragraph 3-6, Duration of an Event and Classes of Overpressure).

The design basis threat, level of protection, and overpressure class should be determined by the planning team or facility user and provided as part of the design criteria. Refer to UFC 4-020-01 for information on determining the design basis threat, level of protection, and overpressure class.

3-1.2 Planning and Design Phase

After the assessment phase, the design process moves into the planning and design phase, which includes determining the following:

- Constraints
- Resources
- Costs

Using this information, the designer can determine the optimal design solution, which then allows either construction or the procurement or acquisition process to begin.

3-2 FACILITY CONSTRUCTION TYPES

3-2.1 General

Limited CBR protection is required in accordance with UFC 4-010-01 for all new inhabited facilities and certain inhabited building additions as well as all existing inhabited facilities that are undergoing major renovation or conversion of use. Additional facilities and levels of protection beyond the minimum required in UFC 4-010-01 should be incorporated into facility designs consistent with the design criteria established during the planning phase. CBR protection may also be provided if required by the commander or authority having jurisdiction over the facility. Paragraphs 3-2.2 through 3-2.4, below, explain how CBR protection can be designed into new construction, retrofit to existing buildings, or provided as an integral part of an expeditionary ColPro shelter.

3-2.2 New Facilities

New facilities should be designed to provide a well-sealed perimeter around the ColPro area. Depending on the actual ventilation system design, new facilities may require increased heating, ventilating, and air-conditioning (HVAC) system capacity and larger mechanical rooms to fully integrate a ColPro system. The ColPro system includes some or all of the following: ColPro filtration system, sealing measures, dampers, ductwork, airlocks, vestibules, and controls. The ColPro filtration system consists of the filters, fan, and filter housing.

3-2.3 Retrofits

All inhabited facilities undergoing a major retrofit to include new mechanical ventilation systems require modification to meet at least the very low level of protection requirements in Paragraph 3-5.1, Very Low Level of Protection (Sheltering in Place). In addition, the retrofits should protect against the design basis threat and provide the protective features of the level of protection determined in the assessment phase.

Existing facilities should be evaluated in terms of their tightness, the degree to which protection equipment can be integrated with existing HVAC systems, and the extent of modifications needed to meet the required level of protection. Major retrofits, like new facilities, may not be capable of fully integrating a ColPro system without increased HVAC system capacity.

3-2.3.1 Temporary and Permanent Modification of Existing Facilities

Expedient sealing measures, such as plastic sheeting and tape, can provide a temporary ColPro shelter. These measures, together with the use of portable fan and filtration equipment or recirculation filters with particulate or particulate and gas removal capability, can increase the level of protection during an emergency. The temporary measures must be in place prior to the release of an agent or before the agent reaches the building. Such sealing can temporarily enhance the protection afforded by a shelter until permanent measures can be provided.

The entire building or selected portions of the building can also be sealed by permanent measures, including architectural construction materials, weather sealing, insulating foam, caulking, and other measures that provide a sealed, protective area envelope. These measures, together with the use of permanent filtration equipment capable of removing particulates or particulates and organics, can increase the level of protection during an emergency.

3-2.3.2 Secondary Enclosure

If a facility cannot be sealed economically to maintain a ColPro overpressure but is suitable as a shell, a secondary enclosure for portable ColPro systems can be installed within the facility. The secondary enclosure must be in place and activated before a CBR event or an agent reaches the facility. With this type of arrangement, the existing HVAC system can partially or fully maintain the facility design temperature outside the enclosure. An example of this type of secondary enclosure is the M20/M20A1 simplified ColPro equipment with filter and blower assemblies. Secondary enclosures may be installed in a variety of facilities, including warehouses, gymnasiums, hangars, hardened aircraft shelters, and maintenance bays.

3-2.4 Expeditionary Shelters and Equipment

In expeditionary situations where permanent facilities are unavailable or inadequate for incorporating CBR protection features, a transportable ColPro system or a military system such as M28 ColPro equipment can be used. For additional information on these systems, refer to Army Publication FM 3-11.4 (FM 3-4), Marine Corps Publication MCWP 3-37.2, Navy Publication NTTP 3-11.27, or Air Force Publication AFTTP(I) 3-2.46.

3-3 THREAT TYPE

The threat type is a combination of the agent type and the delivery tactic. Paragraphs 3-3.1 through 3-3.2, below, discuss agent types, the physical state of agents, the effects of agents, and airborne delivery tactics.

3-3.1 Agent Types

CBR agents can be TICs and TIMs, biological or radiological agents, or military chemical agents. They can be categorized by their physical state as liquids, solids (or particulates), and gases (or vapors).

3-3.1.1 Toxic Industrial Chemicals and Materials

TICs and TIMs are liquids, particulates, and gases produced for commercial and industrial applications. They are generally of lower toxicity than military chemical agents but are available throughout the world. An international task force listed 98 of these

chemicals, in *Final Report of Task Force 25: Hazard from Industrial Chemicals*, as presenting a particular threat because of their toxicity and availability. Facilities may be vulnerable to an accidental or terrorist-caused release of TICs and TIMs from nearby manufacturing or storage facilities. Accidents or sabotage involving trucks, train cars, or ships that are carrying TICs or TIMs and are traveling near to or unloading at the facility can also cause releases.

3-3.1.2 **Biological Agents**

Biological agents (toxins and pathogens such as viruses) are small particles. Effective delivery of these agents as aerosols generally requires a particle size ranging from 1 to 5 microns. Pathogens are some of the smallest agents, with a particle size of 0.005 to 5 microns, and therefore will affect filter requirements. Pathogens act more like a gas than a particle and travel in droplet nuclei or in clumps, whereas toxins may be in liquid or crystalline form. For a description of biological agents, refer to Army Publication FM 3-6, Marine Corps Publication FMFM 7-11-H, or Air Force Publication AFM 105-7.

3-3.1.3 **Radiological Agents**

The physical form of a radioactive threat could be liquid, particulate, or vapor. For a description of radiological agents, refer to Army Publication FM 3-6, Marine Corps Publication FMFM 7-11-H, or Air Force Publication AFM 105-7.

3-3.1.4 **Military Chemical Agents**

Military chemical agents can be liquid, gas, or aerosol at standard conditions. Most of the toxic military chemical agents are liquids, which evaporate at differing rates to produce vapor. Chemical agents produce casualties through inhalation or contact with the skin or eyes. For a description of military chemical agents, refer to Army Publication FM 3-9, Navy Publication P-467, or Air Force Publication AFM 355-7.

3-3.2 **Airborne Delivery Tactics**

There are two principal tactics for delivering agents to facilities:

- External release from a point or line source, such as an aircraft (aerial release) or aerosol upwind of a facility (standoff release), or by direct insertion into an outside air intake

- Internal release via a direct release within the building, insertion into the internal ventilation system, or mail or supplies delivery

Paragraphs 3-3.2.1 and 3-3.2.2, below, address tactics that are considered to pose the greatest potential threat for delivery of a CBR agent.

3-3.2.1 **External Release**

External releases may result from accidents involving industrial transport or storage, fires, or malicious acts. This delivery tactic does not require introducing a device or container into a building or passing it through a secured perimeter. In the case of a building, the plume of the agent is directed by the wind to an outside air intake or open windows and doors. Atmospheric conditions and wind speed influence the effective range, concentration, and duration of a directed-plume attack.

3-3.2.2 Internal Release

The internal release delivery tactic involves transporting a device containing a CBR agent into a building and initiating the release manually, automatically, or remotely. An internal release can rely simply on the natural air currents or forced air movement and occupant movement to circulate the agents throughout the building. An agent can be delivered by personnel with unrestricted access to the protective area of the building (that is, the ColPro area, where personnel are able to work or shelter without wearing IPE/PPE during release of a CBR agent), inserted into the building's mechanical room ventilation system, or delivered by mail or supplies. The goal is to prevent an internal release by means of security measures that will keep CBR agents from entering the facility interior and design measures that will minimize the effects on the building and its occupants.

3-3.3 Design Basis Threat

As outlined in Paragraph 3-1.1, Assessment Phase, the design basis threat is established by the facility user or the planning team during the planning phase by evaluating the likelihood that aggressors will target identified assets and the aggressors' objectives with respect to the potential target assets (refer to UFC 4-020-02, Chapter 3). The following descriptions of the design basis threat levels for airborne contamination are based on the sophistication of the agents and delivery methods likely to be employed. **Note that each design basis threat level includes all of the lower levels.** Refer to UFC 4-020-01 for guidance on establishing the potential target asset value, threat likelihood, vulnerability, risk level, and design basis threat.

The ColPro system design should protect the facility against agents identified at the appropriate threat level. Designing to protect against a lower threat level equates to a higher risk of exposure and greater likelihood of defeat but entails lower costs. Designing to meet a higher threat level equates to a lower likelihood that the building will be compromised if attacked but entails high initial and operating costs.

3-3.3.1 Low Design Basis Threat

A low design basis threat is the threat of external release of biological particulates and TICs. No toxic military chemical or radiological threat is expected.

3-3.3.2 Medium Design Basis Threat

A medium design basis threat is the low threat (biological particulates and TICs) plus the threat of external release of toxic military chemical agents.

3-3.3.3 High Design Basis Threat

A high design basis threat is the threat of external and internal release of all agents, including biological and radiological particulates, TICs, and toxic military chemical agents.

3-3.3.4 Summary of Airborne Contamination Threats

Table 3-1 summarizes the design basis threat, agent type, and delivery tactic for the various airborne threats.

Table 3-1. Airborne Contamination Threats

Design Basis Threat	Agent Type	Delivery Tactic
Very Low	TIC and TIM	External or Internal
Low	TIC and TIM	External or Internal
	Biological and Radiological Particulates	External
Medium	TIC and TIM	External or Internal
	Biological and Radiological Particulates	External
	Military Chemical Agents	External
High	TIC and TIM	External or Internal
	Biological and Radiological Particulates	External or Internal
	Military Chemical Agents	External or Internal

3-4 FACILITY DESIGN STRATEGY FOR CBR PROTECTION

3-4.1 General

A CBR airborne threat can come from an industrial accident or an intentional release either external or internal to the facility. During these events, the first means of protecting personnel is by evacuation from the affected area. If evacuation is logistically impractical (for example, if the event or mission requirements prevent evacuation), then sheltering in place, ColPro sheltering, or IPE/PPE is required.

3-4.2 Protection from External Release

The simplest way to protect against an external release is to shut down the HVAC system and shelter in place as described in Appendix D, Sheltering in Place. In addition, ColPro filtration systems can be placed on the outside air intakes or in the central air-handing unit (AHU) to remove CBR agents and enable pressurization of the building with clean air. Filtration systems are described in Paragraphs 3-5.3, Low Level of Protection; 3-5.4, Medium Level of Protection; and 3-5.5, High Level of Protection. Classes of overpressure are addressed in Paragraph 3-6.2, Overpressure Classification.

3-4.3 Protection from Internal Release

The most effective method to protect building personnel against an internal release is to prevent containers of hazardous materials from being brought into the building in the routine flow of people, mail, supplies, and other deliveries. An integrated building protection approach is required to provide maximum protection. This approach includes access control, filtration of HVAC return air, and isolation of high-risk areas such as mailrooms, lobby areas, security screening areas, and supply delivery areas with separate ventilation systems as well as unscreened public access areas and any other general-access areas.

The simplest way to respond to an internal release is to shut down the HVAC system to limit dispersion of CBR agents. Central air-handling filtration systems that are designed to remove specific CBR agents from recirculated air can help limit distribution

of the CBR agent within the building through the HVAC system. However, such filtration systems do not protect the immediate area where the internal release occurred or possibly even the adjacent area, and contaminated air in return air ducts or plenums may be spread to other parts of the facility.

3-4.3.1 **Access Control**

All secured doors should have an electronic entry or manual lock system that only authorized personnel can activate. All maintenance personnel and their equipment and authorized deliveries should be checked for hazardous materials. Screening personnel should be provided with specific operational procedures to detect the presence of hazardous material containers.

3-4.3.2 **Security Screening**

Entry screening is a two-step process: (1) detecting a closed container and (2) determining whether the contents of the container are hazardous or likely to be hazardous. Both steps should be established in coordination with the appropriate security personnel and in accordance with guidance in UFC 4-020-02 for the applicable level of protection. The first step could involve the use of x-ray equipment; the use of a metal detector; or a manual search of briefcases, handbags, packages, letters, boxes of supplies, and deliveries of food and bottled beverages. The following are items to consider for further examination or exclusion:

- Aerosol cans or other pressurized containers
- Manual or electric spray devices
- Containers of liquids or powders
- Bottled gases typically used for repair or maintenance within the building
- Pressurized dispensers containing irritating agents, including pepper spray, mace, and tear-producing agents

The second step involves examining the container, its contents, and labels and then determining whether the contents agree with the label. Liquid or powder in an unlabeled container is reason for prohibiting it from entering the building. This step also involves checking for alterations to the label.

3-4.3.3 **Ventilation System Isolation**

To limit the spread of agents after an internal release, areas having a higher risk of a release should have a separate HVAC system, exhaust fan, sealed full-height boundary walls, and low-leakage doors and dampers. These areas also should be kept at a slight negative pressure relative to the other areas of the building.

3-4.3.4 **Windows**

Fixed and forced-entry-resistant exterior window designs can prevent a container with a CBR agent from being thrown through a window. Refer to UFC 4-010-01 for minimum window requirements and to UFC 4-020-02 for any additional requirements.

3-5 LEVELS OF PROTECTION

The facility design requirements for each level of protection against varying CBR threats are discussed in Paragraphs 3-5.1 through 3-5.5, below. Levels of protection are part of the design criteria established by a planning team during the project planning process. They are commonly based on asset value as established using a process in UFC 4-020-01 and should not be changed without consulting with the facility user or the planning team. The discussion of levels of protection in this UFC includes the following topics:

- Design requirements for the very low level of protection (Paragraph 3-5.1)
- Recommended measures to protect facilities regardless of the level of protection (Paragraph 3-5.2)
- Design considerations for the low level through the high level of protection (Paragraphs 3-5.3 through 3-5.5)

For a table summarizing the levels of protection, overpressure, and filtration system for each level, refer to Paragraph 3-7, Building Protection Summary.

3-5.1 Very Low Level of Protection

The very low level of protection incorporates passive building component features at little or no additional cost when included in new facility designs and major retrofits. Protection measures that are recommended for all buildings and are **required** for new inhabited facility designs and major retrofits are a mass notification, public address, or alarm system; air distribution emergency shutoff; sealed mailrooms with separate, dedicated ventilation systems and exhaust fans; elevated outside air intakes; and restricted roof access. For additional information, refer to Paragraphs 3-5.1.1 through 3-5.1.3, below; Appendix D, Sheltering in Place; and UFC 4-010-01.

3-5.1.1 Mass Notification, Public Address, or Alarm System

A mass notification, public address, or alarm system is critical to CBR protection. It is necessary to alert building occupants of a CBR release and to provide direction for evacuation. It indicates when to initiate evacuation procedures, put on protective masks, or employ ColPro.

3-5.1.2 Emergency Air Distribution Shutoff

All new inhabited buildings must be provided with at least one emergency air distribution shutoff switch, and such switches are recommended for existing inhabited buildings undergoing major renovation. When the switch is activated, air distribution equipment throughout the building will be de-energized and low leakage motorized dampers will close to reduce the flow of airborne contaminants within the building and between the building and outdoors. Shutdown of the HVAC system for an area that has critical heating or cooling needs is an operational decision that must be made by the facility operator depending on the current activities, Impact on mission, backup facilities available, type of agent, and other factors. It is also recommended that the emergency deactivation cause elevators, if in motion, to go to the next floor and stop (the doors may open and close, but the elevator is not to move).

The shutdown of air handling systems must be performed in a controlled, sequenced manor to avoid damage to the systems. If a large fan and a normally closed damper are de-energized simultaneously, then the damper will close while the fan is still spinning causing the ductwork or air handling equipment to collapse. If due to threat conditions, it is determined that the dampers must be closed immediately before the fan slows down, then the system, between the damper and the fan, must be designed to withstand the dead head static pressure of the fan.

Figures 3-1, 3-2, and 3-3 illustrate the emergency air distribution shutoff for the very low level of protection for some typical air-handling systems. Figure 3-1 represents a central air-handling system that can be shut down during a CBR event. In the case of a local air-handling system that cannot be shut down due to critical heating or cooling needs, the recommended arrangement is a triple damper, as shown in Figure 3-2. The AHU is placed in a recirculation mode, and the triple damper arrangement reduces the possibility of contaminated outside air leakage through the outside air damper. This arrangement provides two benefits: (1) it prevents the supply fan from creating a negative pressure on the AHU side of outside air damper D-1, which would increase outside air leakage through the damper and into the AHU, and (2) opening damper D-2 allows the air leakage through damper D-3 to come from the mechanical room through damper D-2. It should be noted that although the triple damper arrangement reduces the introduction of exterior airborne contaminants into the building, continuing to operate the AHU would distribute contaminants in the conditioned space. As a first response to an unknown release, it is recommended that the facility operate in the protection mode for a release outside of the critical conditioned area, with outside air dampers closed and fans operating. If the release is determined to be inside the critical conditioned area, the fans can be de-energized. Figure 3-3 illustrates a typical fan coil system with a central outside air intake that is ducted to the fan coil units.

Figure 3-1. Very Low Level of Protection – Central Air-Handling System

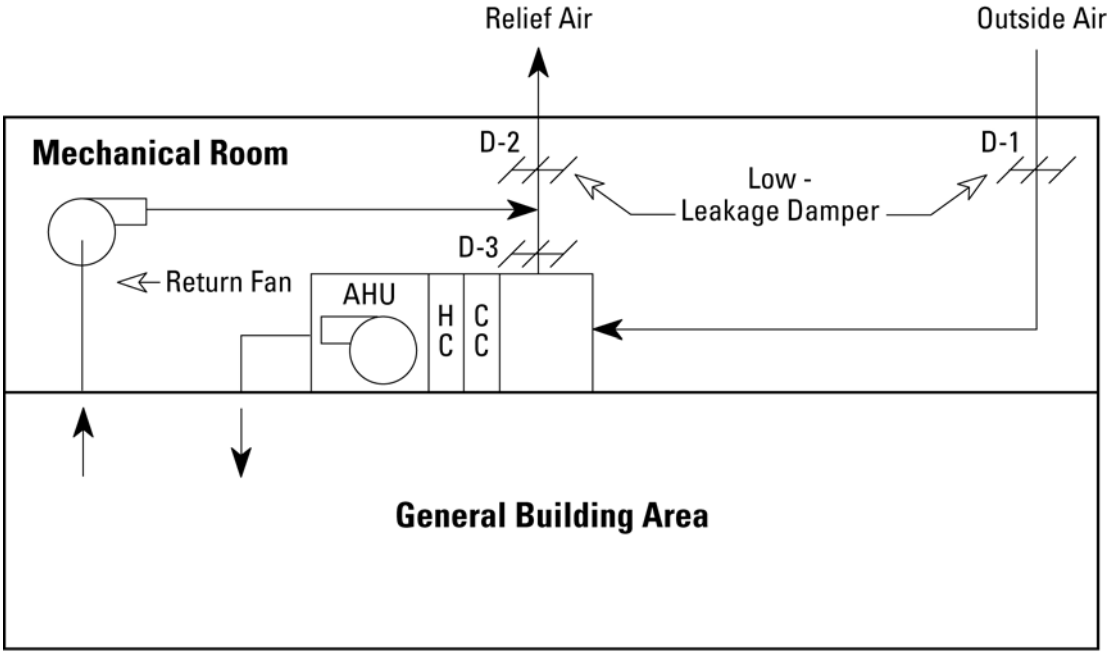

Damper No. or Equipment	Normal Mode	Protection Mode
D-1	Open (or modulating)	Closed
D-2	Open (or modulating)	Closed
D-3	Open (or modulating)	Closed
AHU	On	Off
Return Fan	On	Off

Figure 3-2. Very Low Level of Protection – Local Air-Handling System Requiring Continuous Operation

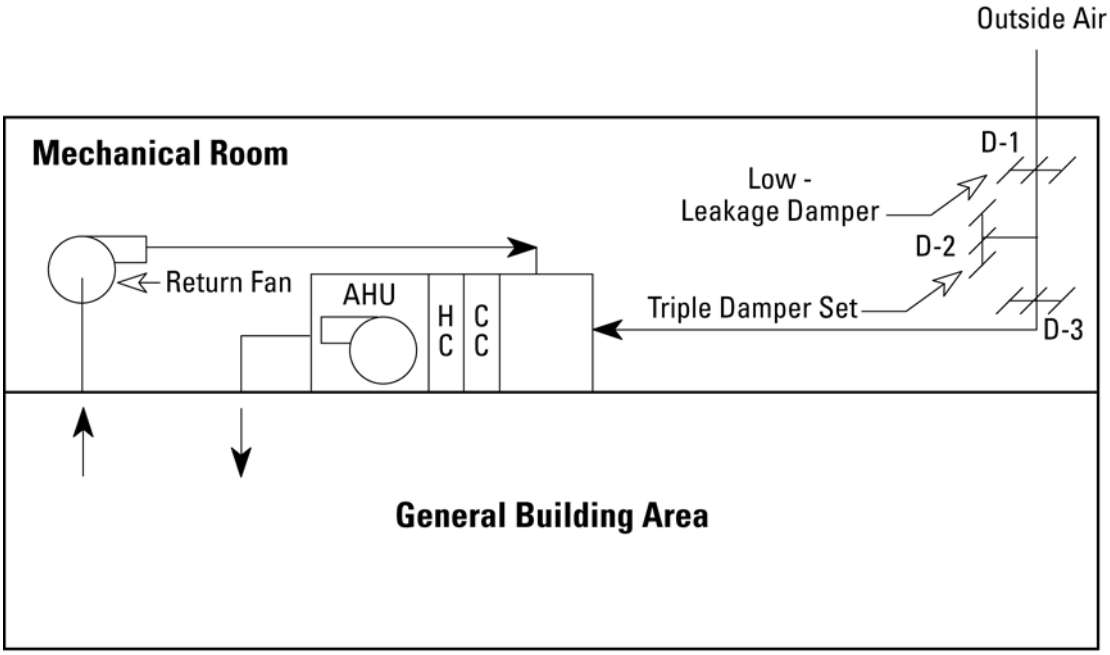

Damper No. or Equipment	Normal Mode	Protection Mode – Release Outside Conditioned Area	Protection Mode – Release Inside Conditioned Area
D-1	Open (or modulating)	Closed	Closed
D-2	Closed	Open	Open or Closed
D-3	Open	Closed	Open or Closed
AHU	On	On	Off
Return Fan	On	On	Off

Figure 3-3. Very Low Level of Protection – Fan Coil System

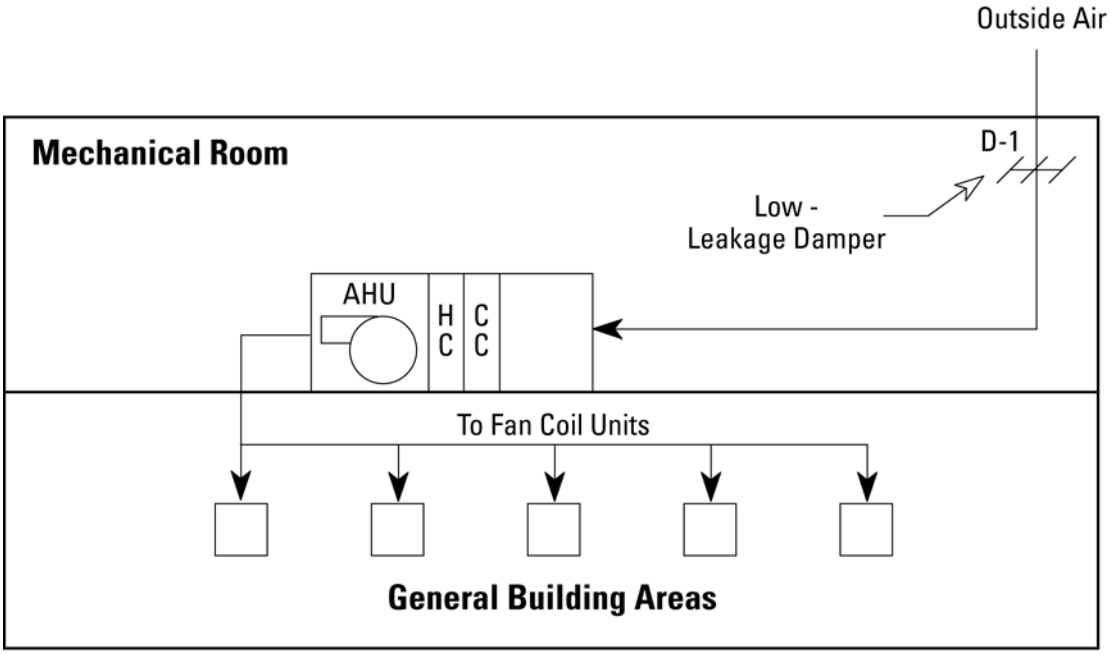

Damper No. or Equipment	Normal Mode	Protection Mode
D-1	Open	Closed
AHU	On	Off
Fan Coil Blowers	On	Off

3-5.1.3 **Mailroom Ventilation**

The design and installation of mailroom ventilation should conform to the level of protection for the building. At a minimum, mailrooms must be constructed and sealed in accordance with the minimum antiterrorism standards provided in UFC 4-010-01.

Figure 3-4 illustrates a typical dedicated air-handling system for mailrooms to meet the basic requirements for all levels of protection. Mailroom ductwork should not be run in the plenum space in a protective area as contaminated air could leak from the ductwork into the protective area. The table under Figure 3-4 indicates the recommended damper positions and fan operating status for the normal operating mode, for the protection mode when a release has occurred outside of the mailroom, and for the protection mode when a release has occurred inside of the mailroom. As a first response to an unknown release, it is recommended that the facility operate in the protection mode for a release outside of the mailroom, with all dampers closed and all fans de-energized. If the release is determined to be inside the mailroom, the exhaust fan can be energized and the exhaust damper opened.

Figure 3-4. All Levels of Protection – Dedicated Air-Handling System for Mailrooms

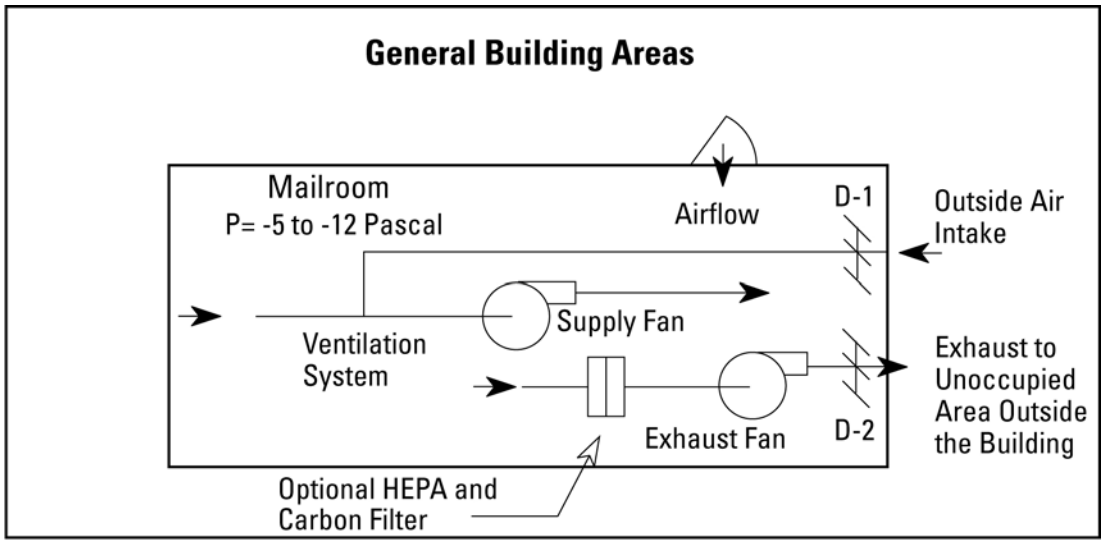

Damper No. or Equipment	Normal Mode	Protection Mode – Release Outside of Mailroom	Protection Mode – Release Inside of Mailroom
D-1	Open (or modulating)	Closed	Closed
D-2	Open	Closed	Open
Supply Fan	On	Off	Off
Exhaust Fan	On	Off	On

3-5.2 Recommended Protection Measures for All Levels of Protection

Recommended measures to protect facilities regardless of the level of protection are provided in Paragraphs 3-5.2.1 through 3-5.2.9, below. These measures exceed the minimum standards presented in UFC 4-010-01.

3-5.2.1 Building Sealing Measures

Particular attention should be paid to ensure adequate sealing of the building or protective area envelope as well as all utility penetrations and building interface joints (for example, the wall and roof interface). Reducing the rate of air exchange with the outside air greatly improves the effectiveness of sheltering in place and reduces the cost of installing and operating a ColPro system to provide overpressure to a protective area. Measures to reduce the air exchange rate and ensure proper sealing are as follows:

- Incorporate typical weatherizing sealing measures and continuous vapor barriers in the building or protective area envelope.

- Include sealing of the window and wall interfaces as well as weather stripping of exterior doorways and doorways between the protective area and potentially contaminated areas of the building.

- Perform a seal integrity pressure test, with an internal pressure applied to the seals, and perform a smoke test to locate areas requiring attention.

- In multistory buildings, seal openings or voids in stairwell walls, elevator shafts, mechanical chases, and other openings between floors to reduce the stack effect within the building. Use National Fire Protection Association (NFPA)-rated materials to seal penetrations through firewalls.

Refer to Paragraph 3-8.2.1, Leakage Determination and Prevention in Existing Facilities, for more information on pressure testing and sealing measures.

3-5.2.2 **Outside Air Intakes**

To prevent the direct insertion of agents into the outside air intakes and to reduce the potential for an agent released at ground level to reach the outside air intakes, the following measures are recommended:

- Elevate outside air intakes and secure roof access in accordance with UFC 4-010-01.

- Place screens over the outside air intakes to prevent objects from being inserted into the intakes. Note that screen openings should be less than 13 mm (0.5 inch) and the slope of the screens should be a minimum of 45 degrees to allow objects placed or thrown onto them to roll or slide off.

- Do not place equipment under wall-mounted outside air intakes that an aggressor could climb to reach the intakes.

- For existing buildings with outside air intakes that are below grade, at ground level, or wall mounted outside secure areas, use physical security measures such as fencing around the intakes and surveillance cameras and motion detectors monitored by security personnel.

Although all of the physical security measures listed above minimize susceptibility to malicious acts, the most effective is elevating the outside air intakes because, under certain conditions, ground-level releases can enter the intakes from points outside the fenced or monitored area. However, the effectiveness of elevating intakes has practical limits. A plume or cloud of hazardous materials can reach the intakes, particularly if the source is large and distant.

3-5.2.3 **Vestibules and Revolving Doors**

Designing or retrofitting main building entrances with integral vestibule areas or revolving doors minimizes infiltration caused by wind and stack effect. Vestibules, airlocks, and revolving doors provide a means of controlling infiltration at main building entrances as people enter and exit the building. These are most beneficial in multistory buildings with large temperature-driven stack effect pressure differences between indoor and outdoor conditions.

3-5.2.4 Control Systems

Regardless of the level of protection, incorporating shelter-in-place and containment protection maximizes the building's passive protection capability against an external threat with forewarning and limits the dispersion of an internal release. The shelter-in-place protection mode consists of de-energizing the ventilation system and closing the outside air intakes and exhaust dampers using a master control capability. The containment protection mode consists of compartmentalizing the fire zones by closing the fire doors and, if the building is so equipped, the smoke dampers. Prior to implementing a scheme to compartmentalize a building, the facility manager or HVAC engineer must understand how one HVAC system affects other parts of the building and the airflow patterns in the building when one or more of the fan systems are shut down. The sequence of operation for HVAC controls must clearly explain all different modes of operation for normal conditions as well as all possible protection mode conditions. Sequence of operation is a combination of narrative and schematic elements to describe required controls function. All controls design must be fully coordinated with security protection requirements. If the building is equipped with a fire alarm control system that controls some or all of the HVAC system fans, note that instead of providing new controls it may be more cost effective to utilize the fire alarm system to de-energize the ventilation system and close the outside air intakes.

Measures to incorporate shelter-in-place and containment protection are as follows:

- Locate the master control switch or ColPro control system so that it is easily accessible but operable by authorized personnel only.

- Incorporate low-leakage dampers and assemblies into the outside air intakes, HVAC system, and exhaust system, as shown in Figures 3-1, 3-2, and 3-3, above.

3-5.2.5 Mechanical Rooms

Mechanical room doors should be constructed of metal with no windows and should be properly locked. Building or shelter managers should control access to the mechanical rooms to prevent access by unauthorized or unescorted personnel and to prevent direct insertion of an agent into the building ductwork system. Mechanical rooms must be large enough to accommodate filtration equipment and perform maintenance.

3-5.2.6 Measures to Accommodate Retrofits to a Higher Level of Protection

Building retrofits can be accommodated to a higher level of protection, as follows:

- Incorporate space within the facility or directly next to its exterior for the future addition of equipment to increase the level of protection.

- As in typical building HVAC design practice, design the main building ventilation system to achieve a slight overpressure of 5 to 12 Pascal (Pa) (0.02 to 0.05 inches of water gage [in wg]). For HVAC system retrofits, provide additional outside air as necessary to maintain the slight overpressure and additional heating and cooling capacity if required by the increase in outside air and fan energy.

3-5.2.7 Zoned Isolation of High-Risk Areas

Measures to limit the spread of agents released inside a high-risk area such as a lobby, security screening area, receiving dock, or any other publicly accessible building area are as follows:

- Design the facility to provide zoned isolation for areas having a greater potential for an internal release, as shown in Figure 3-5, below.
- Provide a separate, dedicated air-handling system to prevent airborne CBR agents from migrating from the high-risk area to other areas of the building through the ventilation system.
- Provide an exhaust fan, and maintain the high-risk area at a negative pressure relative to the rest of the building.
- To limit the migration of airborne CBR agents from the high-risk area into other portions of the building, ensure that the envelope of the high-risk area is well sealed. Ensure that the walls are full-height construction and that they fully extend and are sealed to the undersides of the roof, to the undersides of the floor above them, or to hard ceilings (that is, gypsum wallboard ceiling). When sealing, include visible cracks; the interface joints between the walls and the ceiling, roof, or floor above; and all wall and roof penetrations.
- Provide low-leakage doors between the high-risk area and the rest of the building.
- Provide a separate method of control to isolate the high-risk area. Note that independent control of the air-handling and exhaust systems is required in the event of a suspected or actual CBR release within the high-risk area.
- Consider the use of recirculating-type filtration units to remove contaminants after a release.

Figure 3-5 illustrates the ventilation system of a lobby as a typical high-risk area. The table under Figure 3-5 indicates the recommended damper positions and fan operating status for the normal operating mode, for the protection mode when a release has occurred outside of the lobby, and for the protection mode when a release has occurred inside of the lobby. As a first response to an unknown release, it is recommended that the facility operate in the protection mode for a release outside of the lobby, with all dampers closed and all fans de-energized. If the release is determined to be inside the lobby, the exhaust fan can be energized and the exhaust damper opened.

Figure 3-5. Very Low Level of Protection – Lobby Area Ventilation Containment System

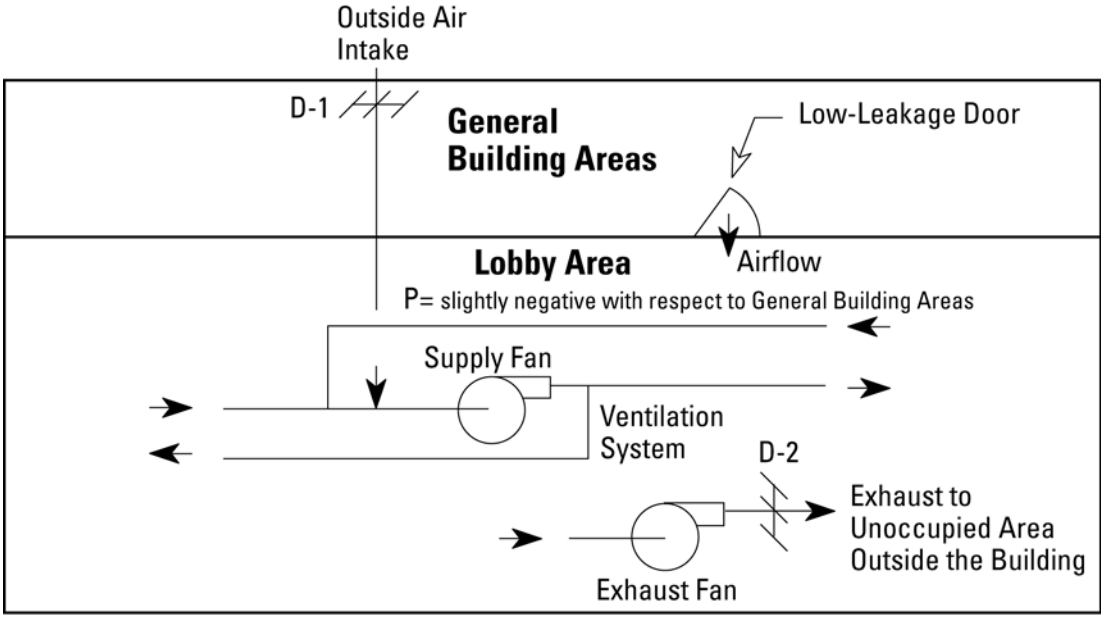

Damper No. or Equipment	Normal Mode	Protection Mode – Release Outside of Lobby	Protection Mode – Release Inside of Lobby
D-1	Open	Closed	Closed
D-2	Open	Closed	Open
Supply Fan	On	Off	Off
Exhaust Fan	On	Off	On

3-5.2.8 Protective Area Floor Space Requirements

The total required protective area floor space is determined based on the sheltering period, the number of people sheltered, and the required floor area per person. Generally, large open areas such as common areas, multipurpose areas, and gymnasiums provide the most efficient floor area for protecting a large number of personnel. In addition, people who cannot be evacuated, such as handicapped personnel and hospital patients, must be considered when establishing the protective area boundaries. The protective area envelope should include bathroom facilities and, for long sheltering periods, a food storage area, if possible.

The command or authority having jurisdiction determines the sheltering area per person and the ColPro sheltering period, which can range from a few hours to several days. The sheltering period influences the floor area per person and the amount of storage for consumables and waste but generally does not significantly affect the design of the ColPro system. The following are guidelines for the minimum floor area for shelter occupants. The minimum floor area does not include mission-critical functional areas that operate continuously.

3-5.2.8.1 Suggested Personnel Floor Area – Less than 12 Hours

A sheltering period less than 12 hours does not require sleeping areas. The occupant loading generally follows the guidelines in Table 3-2. A short duration requires a net area of 0.93 m^2/person (10 ft^2/person), depending on the classification of occupancy, as

stated in NFPA 101 *Life Safety Code*®. The classification of occupancy may require a higher or lower occupant loading, depending on the building classification. The occupant loading must be coordinated with the authority having jurisdiction.

Table 3-2. FEMA Tornado and Hurricane and NFPA 101 *Life Safety Code*® Requirements

Type of Emergency	Anticipated Shelter Time	Floor Area per Person
Tornado	Less than 1 hour	0.46 m^2 (5 ft^2)
Hurricane	Less than 12 hours	0.93 m^2 (10 ft^2)
Hurricane	A few days	1.86 m^2 (20 ft^2)
Hurricane	Days to weeks	3.72 m^2 (40 ft^2)

Sources:
Federal Emergency Management Agency (FEMA) 361, Design and Construction Guidance for Community Shelters, July 2000.
FEMA 320, Taking Shelter from the Storm: Building a Safe Room Inside Your House, August 1999.
NFPA 101, *Life Safety Code*®, 1997.

3-5.2.8.2 **Suggested Personnel Floor Area – More than 12 Hours**
A sheltering period greater than 12 hours requires sleeping areas. The minimum floor area, with single-sized beds or a similar-sized area for resting, is approximately 1.86 to 5.6 m^2/person (20 to 60.3 ft^2/person). With bunk beds, the minimum floor area is approximately 0.93 to 2.8 m^2/person (10 to 30 ft^2/person). Sheltering periods longer than 12 hours are generally restricted to wartime.

3-5.2.9 **Airlock Requirements**
Airlocks are required only for facilities where people or supplies must enter the protective area during a CBR event, during which conditions outside the facility may contaminate people or supplies entering the facility. Personnel who enter and exit the protective area during ColPro operations must process through an airlock. Personnel and material entering the facility must be properly decontaminated before entering the airlock. Airlocks are required to maintain a constant overpressure in the protective area, restrict migration of airborne contaminants into the protective area, and purge contaminants from personnel before they enter the protective area. The number of airlocks required depends on the number of personnel who enter and exit during a given time period. At least one airlock or similar air control passageway is required for resupplying food, bottled water, and emergency evacuation items or for bringing in mission-critical material. Design guidance for airlocks is provided in Appendix C, Airlocks and Entry or Exit Processing.

3-5.2.10 **CBR Detectors**
Theoretically, automatic detectors can be used to initiate protective actions such as shutting down ventilation systems, closing outside air intakes, or turning on filtration systems. However, automated responses to an attack or accidental release are not typically feasible due to limitations in detector technology.

3-5.3 **Low Level of Protection**

3-5.3.1 Features of Low Level of Protection

In addition to the features of the very low level of protection, the strategy at the low level of protection incorporates high-efficiency particulate air (HEPA) filters to filter particulates in the outside air stream. As a practical matter, however, the HEPA filters are generally installed in the central AHU and filter both outside air and recirculated air. Though not necessary for this level of protection, this arrangement has the added benefit of limiting the spread of the particulate agent through the building and purges the agent more rapidly if there is an internal release. HEPA filtration removes biological and radiological particles but does not remove TICs or military chemical agents and should be run continuously.

Figure 3-6 illustrates the arrangement of a typical central air-handling system for the low level of protection. Figure 3-7 illustrates the low level of protection provided by filtration applied only to the outside air of a system using fan coil units. The table under each figure indicates the recommended damper positions and fan operating status for the normal operating mode, for the protection mode when a chemical release or internal particulate release has occurred, and for the protection mode when an external particulate release has occurred. As a first response to an unknown release, it is recommended that the facility operate in the chemical protection mode, with all dampers closed and all fans shut off until it is possible to determine the type of release that has occurred. If the release is determined to be a particulate, the system can be switched to the particulate protection mode.

Figure 3-6. Low Level of Protection – Central Air-Handling System

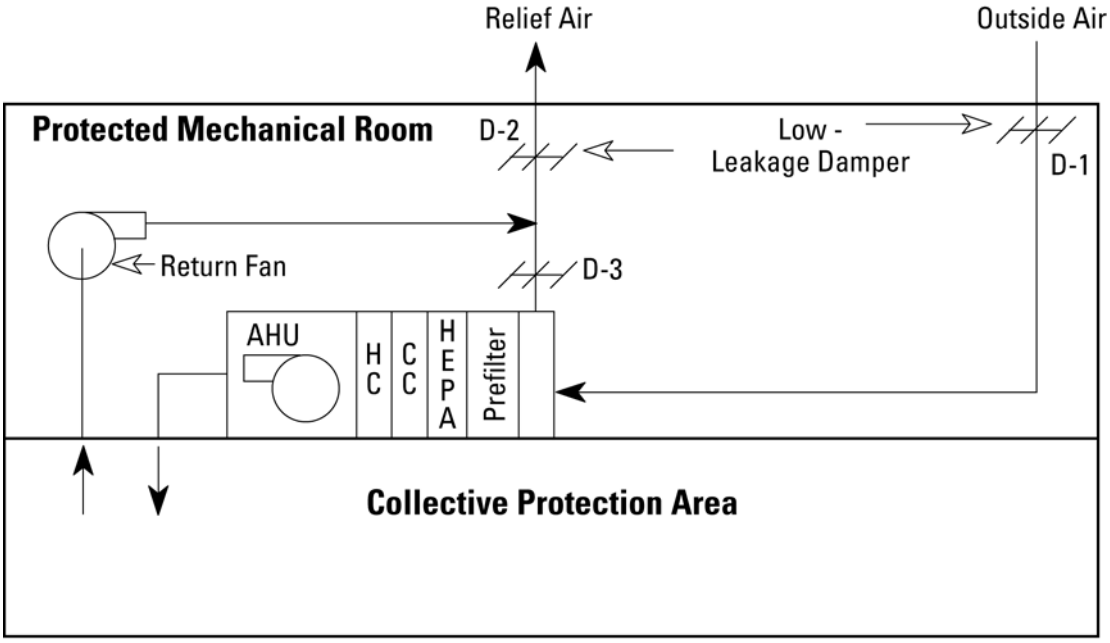

NOTE: If the AHU is located in an unprotected mechanical room, then the HEPA filter should be located downstream of the fan in a blow-through configuration.

Damper No. or Equipment	Normal Mode	Protection Mode – Chemical Release (Default Mode)	Protection Mode – Internal or External Particulate Release
D-1	Open (or modulating)	Closed	Open (or modulating)
D-2	Open (or modulating)	Closed	Open (or modulating)
D-3	Open (or modulating)	Closed	Open (or modulating)
AHU	On	Off	On
Return Fan	On	Off	On

Figure 3-7. Low Level of Protection – Fan Coil System

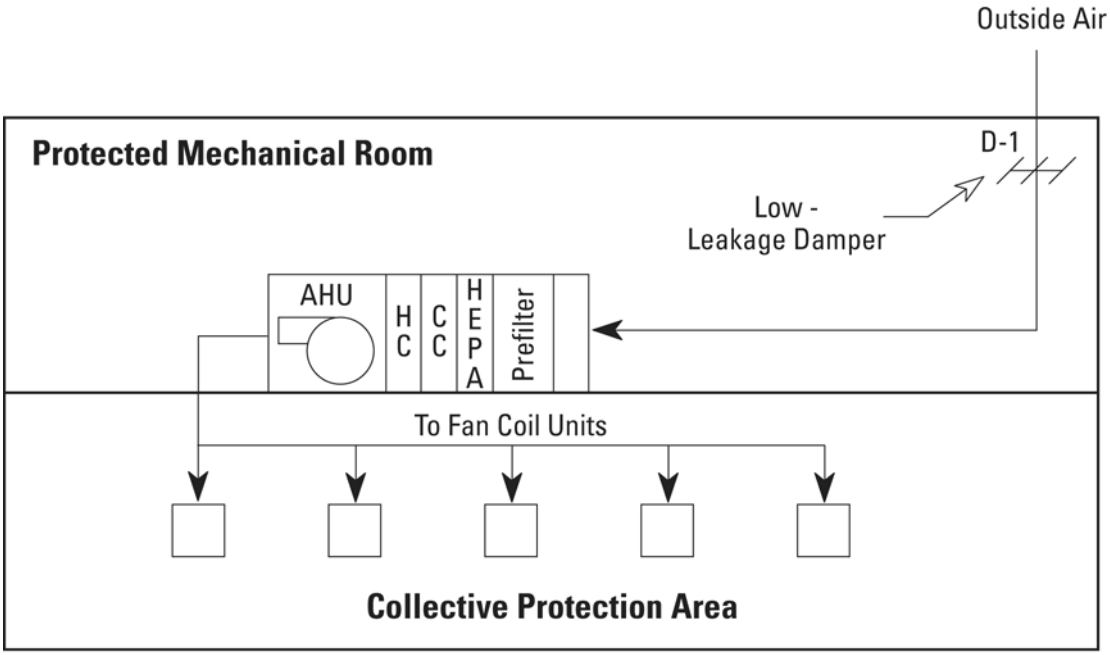

NOTE: If the AHU is located in an unprotected mechanical room, then the HEPA filter should be located downstream of the fan in a blow-through configuration.

Damper No. or Equipment	Normal Mode	Protection Mode – Chemical Release or Internal Particulate Release (Default Mode)	Protection Mode – External Particulate Release
D-1	Open	Closed	Open
AHU	On	Off	On
Fan Coil Blowers	On	Off	On

3-5.3.2 **Retrofits**

Retrofitting existing facilities to meet the low level of protection requires incorporating HEPA filtration into the central air-handling systems. The existing AHUs may need modification to allow room for installing the HEPA filters and the required prefilters. The existing AHU fans, and in some cases the entire AHU, may require upgrading or replacement to compensate for the increased static pressure drop through the additional filters. After any retrofit, adequate space must still be maintained for servicing and maintenance of all components.

3-5.3.3 **Mailroom Ventilation**

During new construction or major retrofits, the design and installation of mailroom ventilation for the low level of protection must meet the requirements for the very low level of protection. Figure 3-4, above, illustrates a typical dedicated air-handling system for mailrooms.

3-5.4 Medium Level of Protection

3-5.4.1 Features of Medium Level of Protection

The medium level of protection has the following features in addition to those of the low level of protection:

- A vapor adsorber system on the outside air intakes of the ventilation system either in continuous operation or in standby mode

- For the standby mode, activation of the ColPro filtration system during a heightened threat condition or advance warning

Figures 3-8 and 3-9 show the general arrangement of central air-handling systems for the medium level of protection with unprotected and protected mechanical rooms. Figure 3-10 shows the general medium level of protection arrangement of an outside air intake AHU that supplies outside air to fan coil units distributed in the building. The table under each figure indicates the recommended damper positions and fan operating status for the normal operating mode, for the protection mode when an internal release has occurred, and for the protection mode when an external release has occurred. For the medium level of protection, it is recommended that the facility operate in the external protection mode, with all dampers open and all fans operating. If agents are present in the building, the emergency air distribution shutoff should be activated; fans should be de-energized, and dampers should be closed as indicated for the internal release protection mode.

Figure 3-8. Medium Level of Protection – Central Air-Handling System – Unprotected Mechanical Room

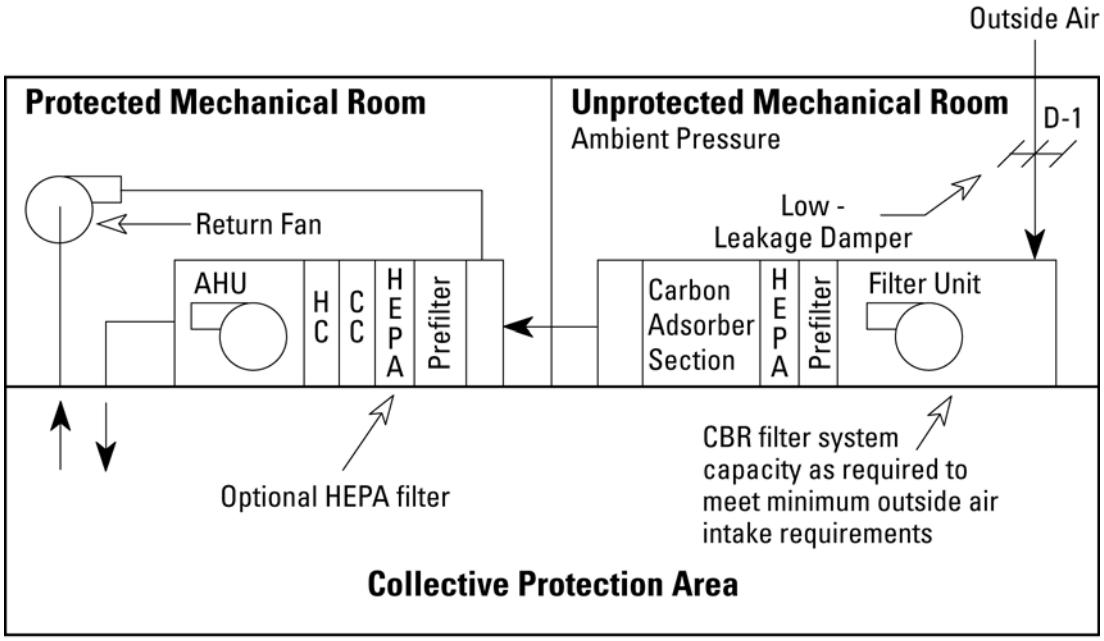

Damper No. or Equipment	Normal Mode	Protection Mode – Internal Release	Protection Mode – External Release
D-1	Open	Closed	Open
AHU	On	Off	On
Filter Unit Blower	On	Off	On
Return Fan	On	Off	On

Figure 3-9. Medium Level of Protection – Central Air-Handling System – Protected Mechanical Room

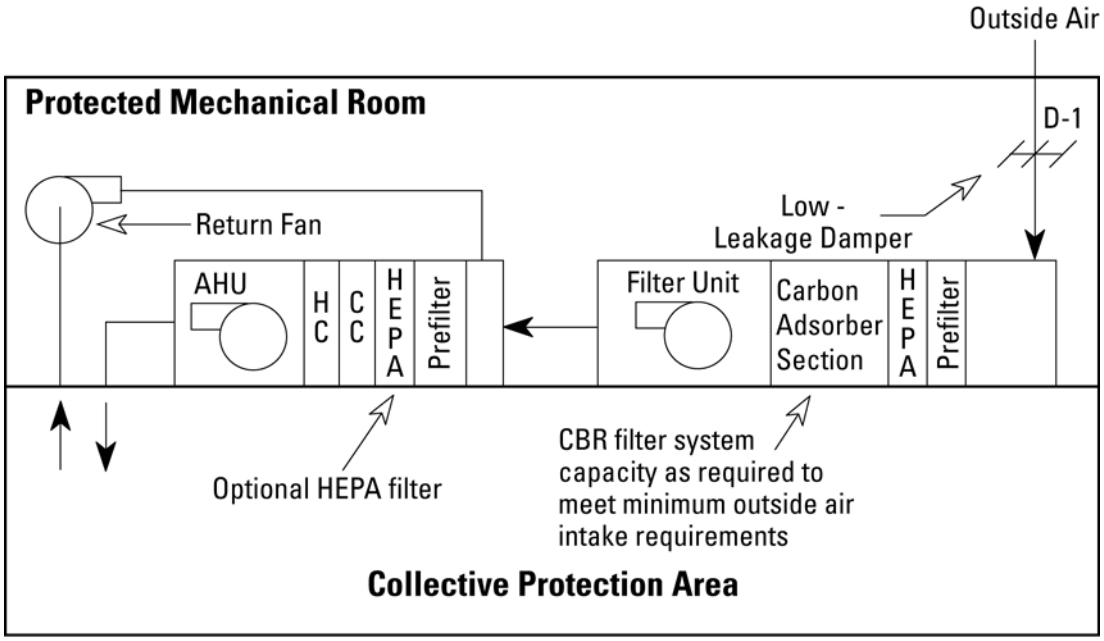

Damper No. or Equipment	Normal Mode	Protection Mode – Internal Release	Protection Mode – External Release
D-1	Open	Closed	Open
AHU	On	Off	On
Filter Unit Blower	On	Off	On
Return Fan	On	Off	On

Figure 3-10. Medium Level of Protection – Fan Coil System

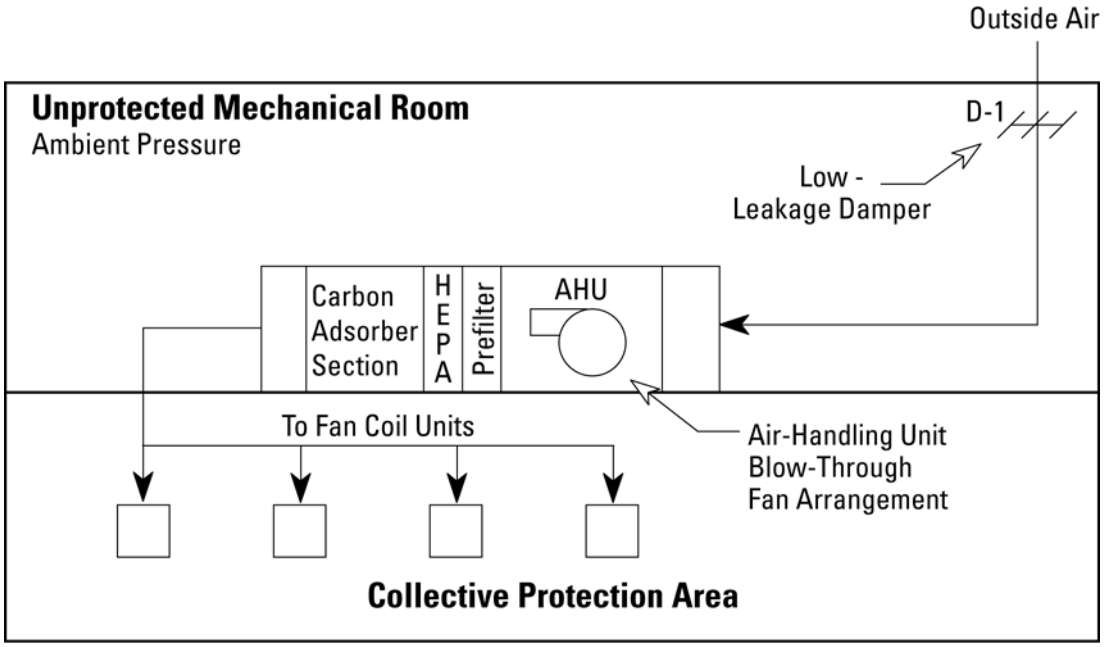

NOTE: If the AHU is located in a protected mechanical room, then the HEPA filter should be located upstream of the fan in a draw-through configuration.

Damper No. or Equipment	Normal Mode	Protection Mode – Internal Release	Protection Mode – External Release
D-1	Open	Closed	Open
AHU	On	Off	On
Fan Coil Blowers	On	Off	On

3-5.4.2 Mailrooms and Other High-Risk Areas

For the medium level of protection, mailrooms must meet the requirements for the very low and low levels of protection. In addition, it is recommended that mailrooms and other high-risk areas have airlocks or vestibules at the entrances to prevent free flow of air from exiting the space. Figure 3-4, above, illustrates a typical dedicated air-handling system for mailrooms, and Figure 3-5, above, illustrates a typical air-handling system for a high-risk area.

3-5.5 High Level of Protection

3-5.5.1 Features of High Level of Protection

In addition to the features of the medium level of protection, the high level of protection has a continuous HEPA filter and a vapor adsorber system for the outside air intake and return air.

The high level of protection limits the effects of an internal release by removing the CBR agent at the central AHU filtration system before the air is distributed to other areas of the building. Although the high level of protection does not eliminate an internal release from migrating through doorways, walls, and ceilings, it reduces

distribution through the air-handling system. It also scavenges and purges the area where the internal release occurred and other portions of the building through repeated air exchange. Figure 3-11 shows the general arrangement of the air-handling system for the high level of protection.

Figure 3-11. High Level of Protection – Air-Handling System with Integral Filtration

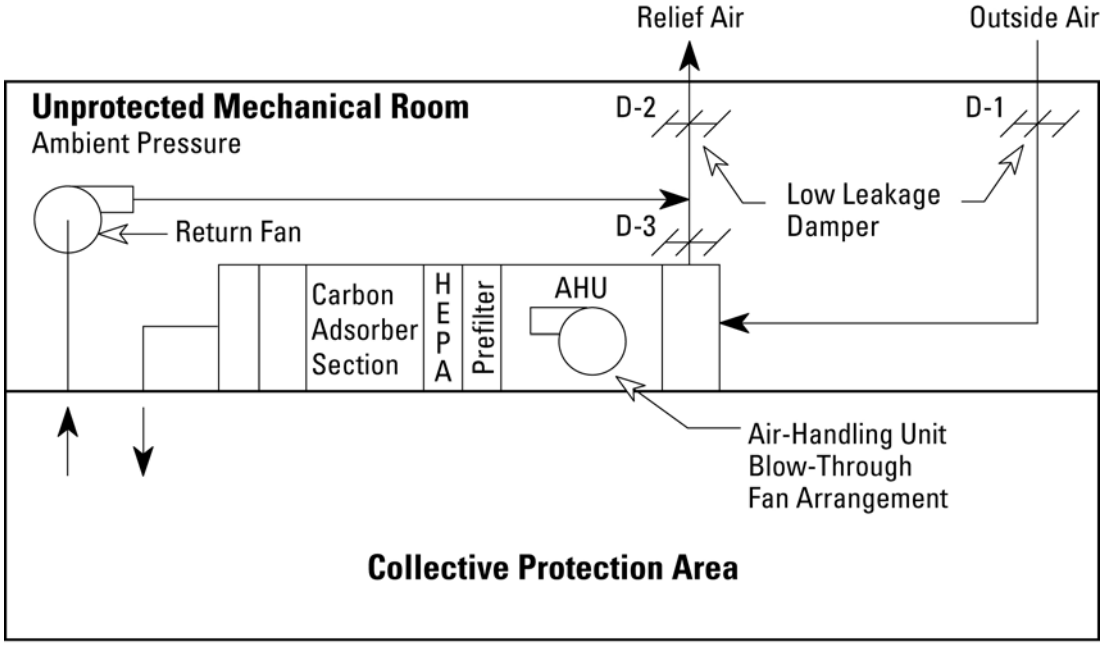

NOTE: If the AHU is located in a protected mechanical room, then the HEPA filter should be located upstream of the fan in a draw-through configuration.

Damper No. or Equipment	Normal Mode	Protection Mode
D-1	Open (or modulating)	Open (or modulating)
D-2	Open (or modulating)	Open (or modulating)
D-3	Open (or modulating)	Open (or modulating)
AHU	On	On
Return Fan	On	On

3-5.5.2 Mailrooms and Other High-Risk Areas

For the high level of protection, a remote mailroom, loading dock, and security screening area are most appropriate. Mailrooms must meet the requirements for the very low, low, and medium levels of protection, and other high-risk areas should meet the recommendations for the very low, low, and medium levels of protection. In addition, it is recommended that there be containment control hoods for opening suspicious mail, packages, and carrying cases. Figure 3-4, above, illustrates a typical dedicated air-handling system for mailrooms, and Figure 3-5, above, illustrates a typical system for a high-risk area.

3-6 DURATION OF AN EVENT AND CLASSES OF OVERPRESSURE

The duration of an event and the need for a building to remain operational during an event, as dictated by the value of the asset to its user and the facility's emergency operation procedures, determine the overpressure required to provide ColPro capability. Only facilities with a very low level of protection, for which there is no overpressure, do not require an evaluation and determination of the overpressure that will be applied. Coordination with the facility user is necessary to establish this requirement if it is not established as part of the original design criteria.

An overpressure is established within a building, or portion of a building, by supplying more filtered outside air to the building than is exhausted from the building by the building's ventilation system. The overpressure prevents external CBR agents from infiltrating through the building shell into the protective area. For existing and new facilities designated to provide ColPro capability, there are three overpressure classes:

- Class III – No pressurization
- Class II – Filtration with slight pressurization
- Class I – Filtration with pressurization

3-6.1 Duration of an Event

3-6.1.1 Short Duration

Short-duration external releases last for a few minutes to a few hours, depending on the event. There is little or no warning, but it is possible to identify the source quickly and provide mitigation. Facilities that are used as shelters or must be operated continuously may be designed with no filtration or overpressure, with filtration and no overpressure, or with a slight overpressure with continual filtration of the ventilation air intakes.

3-6.1.2 Long Duration

Large-scale, long-duration external releases that last a number of days or weeks are very unlikely as a result of a terrorist attack or an industrial accident. However, existing circumstances may result in contamination that persists for a long period of time. Facilities that must be operated continuously for a long duration must be designed with filtration on the outside air intakes and an overpressure in the facility.

3-6.2 Overpressure Classification

The three classes of overpressure for existing and new facilities relate to the duration that an asset must be protected against the threat depending on its value to its user and emergency operation procedures. Table 3-3 summarizes the ColPro capability provided by each class of overpressure based on the event duration and wind speed. In the table and the following paragraphs, the overpressure classes are presented in order of increasing protection.

Table 3-3. Overpressure, by Class

Class	Event Duration	Internal Overpressure	Wind Speed
III – No Pressurization	Minutes to hours (depending on event)	0 Pa	Not applicable
II – Filtration with Slight Pressurization	Minutes to hours (depending on event)	5-12 Pa (0.02-0.05 in wg)	8-13 km/hr (5-8 mph)
I – Filtration with Pressurization	Weeks	75 Pa (0.30 in wg)	40 km/hr (25 mph)

3-6.2.1 **Class III – No Pressurization**

Class III provides no overpressure in the building to restrict the infiltration of airborne contaminants; therefore, building occupants are provided limited protection during a short-duration CBR event from an external release. An area with no pressurization (Class III) may have a filtration system or may be a shelter with no filtration. Although Class III protection has a low cost, there is a higher likelihood of defeat or risk of exposure and a higher vulnerability for the assets due to infiltration of contaminants. For more information, refer to Appendix D, Sheltering in Place.

3-6.2.2 **Class II – Filtration with Slight Pressurization**

Class II corresponds to a lower likelihood of defeat than Class III. Class II provides a slight overpressure capability of 5 to 12 Pa (0.02 to 0.05 in wg) to resist a short-duration event. A continuous ColPro filtration system designed to remove CBR agents continuously protects outside air intakes, and the overpressure prevents agents from penetrating the protective area envelope of low-profile (one- to two-story) buildings at wind speeds of 8 to 13 km/hr (5 to 8 mph). The filtration system is sized for the normal outside air intake requirement.

Existing and new facilities designated as Class II do not require an airlock for personnel ingress or egress under normal conditions, but it is desirable to have a double-entry door such as a vestibule entrance or revolving door that acts as an airlock to maintain the slight overpressure of the protective area and the integrity of the envelope.

3-6.2.2.1 **Class II – Existing Facilities**

Existing facilities should be pressure-tested to identify and seal leakage paths. The indoor air quality and exhaust airflow rates must meet building mechanical codes. The ventilation design must be analyzed to determine whether an overpressure can be achieved by supplying additional outside air through the existing ventilation system or by restricting exhaust airflow rates such as from an economizer air exhaust or from other building exhaust systems. In some cases, both means may be necessary. To analyze the ventilation system design overpressure capability, an air leakage measurement test using the existing air-handling system or a blower door assembly (consisting of a fan to provide airflow and pressure, a mounting frame for the fan, a differential pressure gage, and a calibrated device that measures the airflow rate into the facility during pressurization and out of the facility during depressurization) can be performed in accordance with American Society for Testing and Materials (ASTM) E779. If the

existing ventilation system cannot achieve an overpressure, filtering the outside air intakes still provides protection, though at a lower protection factor.

3-6.2.2.2 **Class II – New Facilities**

New facility design should incorporate sealing measures. An overpressure can be achieved by supplying a higher rate of filtered outside air to the protective area than is exhausted. To obtain a minimum overpressure of 5 to 12 Pa (0.02 to 0.05 in wg) in the protective area, the additional air required can be approximated by the unit leakage values presented in Table 3-4, or the additional air intake requirement can be determined using calculation procedures in the American Society of Heating, Refrigerating and Air-Conditioning Engineers' 2005 *ASHRAE Handbook Fundamentals*.

Table 3-4. Building Overpressure Unit Leakage Rates*

Building Leakage Category	Construction Type	Unit Leakage Rate L/s per m^2 (cfm per ft^2) of floor area			
		Overpressure			
		5 Pa (0.02 in wg)	12 Pa (0.05 in wg)	75 Pa (0.30 in wg)	100 Pa (0.40 in wg)
Very Tight	72-inch-thick walls and roof, no windows	0.08 (0.02)	0.13 (0.03)	0.36 (0.07)	0.40 (0.08)
Tight	12-inch-thick poured concrete walls, windows with supplemental sealing, concrete roof	0.10-0.36 (0.02-0.07)	0.20-0.61 (0.04-0.12)	0.56-1.83 (0.11-0.36)	0.66-2.18 (0.13-0.43)
Typical	Concrete/block walls, windows with weather seals, metal deck roof	0.76-1.27 (0.15-0.25)	1.27-2.29 (0.25-0.45)	3.81-5.84 (0.75-1.15)	4.57-7.11 (0.90-1.40)
Loose	Poorly constructed building, framed walls, evident leakage paths	2.54 (0.50)	4.57 (0.90)	15.2 (3.0)	18.5 (3.65)

* Building leakage rates are a general estimate derived from limited fan pressurization tests of the construction types listed.

3-6.2.3 **Class I – Filtration with Pressurization**

The protective areas of facilities that cannot be evacuated but may experience a large-scale release of agents over an extended period of time must be designed for a Class I overpressure. Class I provides an overpressure capability to resist a long-duration event and corresponds to a low likelihood that an event will compromise an asset. Typically, this class of overpressure is limited to facilities in wartime areas of operations or to facilities within other areas that require continuous operations during CBR events to support critical missions or operations. Class I should be considered with a high or medium level of protection, and then only for inhabited mission-critical or essential buildings that must remain occupied for an extended period of time. Facility protection and design criteria for Class I CBR protection of facilities is addressed further in UFC 3-340-01, *Design and Analysis of Hardened Structures to Conventional Weapons Effects."*

Extended protection requires a ColPro system that provides an overpressure to resist a continual large-scale threat in a 40 km/hr (25 mph) wind. Therefore, the minimum protective area overpressure is 75 Pa (0.30 in wg). Areas requiring ingress and egress must have an internally or externally located CCA with an ingress airlock, egress airlock, or both. The CCA should be located outside of the facility or under an open-air overhang, roofed shelter, or tent. The ColPro system may be operated continuously or maintained in a standby mode (that is, energized only when there is a known threat of attack). It is advisable, however, to operate the filtration system continuously to protect the building occupants.

3-6.2.3.1 **Class I – Existing Facilities**

It is possible to reclassify buildings with a Class II overpressure as Class I by de-energizing the building's exhaust systems and thereby increasing the internal overpressure. Modification of existing facilities for Class I overpressure requires an engineering analysis to determine whether the existing HVAC system has sufficient heating and cooling capacity to fully or partially integrate the ColPro system. If the existing system is not capable, or only partially capable, a supplemental heating and cooling system can be provided.

3-6.2.3.2 **Class I – New Facilities**

New facilities with Class I overpressure must be capable of maintaining the facility temperature and pressure during ColPro operations. Refer to Paragraph 3-6.2.2.2, Class II – New Facilities, for methods of determining the airflow rates required to obtain the necessary overpressure.

3-7 BUILDING PROTECTION SUMMARY

Table 3-5 provides an overview of the overpressure classes and the corresponding level of protection and filtration system.

Table 3-5. Building Protection Summary

Level of Protection	Overpressure	Filtration System
Very Low	Class III	None
Low	Class II (5-12 Pa)	HEPA filters on outside air or supply air if more practical
Medium	Class I (75 Pa) or Class II (5-12 Pa) (depending on duration of occupancy needed)	HEPA filters and carbon adsorbers on outside air
High		HEPA filters and carbon adsorbers on all supply air

3-8 DESIGN OF THE COLLECTIVE PROTECTION SYSTEM

3-8.1 Design Approach

For ColPro systems, the airflow capacity required for the air filtration units is determined by the greater of two components: (1) the sum of the air leakage rate at design overpressure and the ventilation rate for exhaust requirements, or (2) the amount of outdoor air to satisfy indoor air quality requirements. All penetrations in the protective area envelope require proper sealing, and the air leakage control barriers must be continuous. Weather sealing measures can reduce leakage by 5 to 50 percent, depending on the type and quality of facility construction. Sealing the protective area envelope reduces the air leakage rate and thus the required amount of filtered air and the cost of heating and cooling. Simple weather stripping on doors can reduce the leakage rate over that of a standard interior door installation. For most applications, the use of weather-strip-grade door seals is sufficient. The cost of sealing measures should be balanced against the cost of filtration and HVAC equipment; sealing measures must be economical compared to the cost of the filtration and HVAC equipment.

In most cases, the installation of a ColPro system will increase the facility's energy usage due to higher fan static pressures, increased outside air requirements to pressurize a building, and the possible elimination of economizer cycles. In addition, operation and maintenance (O&M) costs will increase due to filter replacement and system testing. Designers, facility managers, and commanding officers should evaluate these costs to ensure that sufficient O&M funds will be available.

3-8.2 Envelope Leakage Rate

For buildings designed for the medium and high levels of protection, the air leakage rate of the protective area envelope can be estimated using the building overpressure unit leakage rates in Table 3-4, above. The building leakage characteristics in the table are a general estimate derived from limited fan pressurization tests of the construction types indicated. Therefore, specific air leakage testing should be performed for the construction type used. The leakage test of the protective area envelope should occur after construction or renovation to verify the leakage rate and ensure that the ColPro filtration system has sufficient capacity.

3-8.2.1 Leakage Determination and Prevention in Existing Facilities

Steps to determine leakage rates and provide recommendations for preventing leakage of the protective area envelope in existing facilities are as follows:

- Perform a pressurization test using a blower door assembly or the facility AHUs in accordance with ASTM E779.

- Plot airflow and building pressure test data on a log-log graph for ease of data tabulation, extrapolation, and review.

- During testing, identify air leakage locations when the blower door assembly is operated in the negative pressure mode (that is, with the blower door fans blowing out of the test area, creating a negative pressure) and draws outside air into the proposed protective area.

- Identify leakage locations by physical inspection or smoke testing.

- Seal leakage areas with a good-quality sealant or, if necessary, reconstruct the areas.

- After sealing, conduct a second pressure test to determine the final protective area envelope air leakage rate.

3-8.2.2 Leakage Determination and Prevention in New Facilities

Steps to determine leakage rates and provide recommendations for preventing leakage of the protective area envelope in new facilities are as follows:

- Calculate the leakage rate using the effective leakage area procedures in the 2005 *ASHRAE Handbook Fundamentals* (refer to Appendix F, Determining the Building Protection Factor). Include the walls, roofs, floors, doors, windows, sill plates, mechanical and electrical penetrations, ceiling-wall joints, and isolation dampers.

- Use the overpressure of the protective area as the differential pressure in determining the leakage rate.

- Compare the calculated leakage rate to the building overpressure unit leakage rate values in Table 3-4 to confirm that the calculated leakage rate falls within the range of values for the construction type and the overpressure.

- During construction, properly seal penetrations and use continuous air leakage control barriers in the protective area envelope.

- After construction, perform a blower door or pressure test of the protective area envelope to verify the leakage rate and ensure that the ColPro filtration system has sufficient capacity.

3-8.3 HVAC Requirements

3-8.3.1 HVAC for Existing Facilities

HVAC requirements for existing facilities are as follows:

- Perform an engineering evaluation to determine whether the existing HVAC equipment can be used for ColPro operations to maintain the designed indoor air temperatures for both the summer and winter design conditions.

- Coordinate the final indoor temperature for the summer and winter design conditions with the user.

- When providing an overpressure, increase the existing outside air intake if needed. Modify mechanical equipment or add heating and cooling equipment as necessary to meet the new outside air intake requirement and account for additional fan heat.

- For facilities that do not require the HVAC system to maintain above-freezing indoor conditions during low outdoor ambient conditions, consider incorporating provisions for protecting water utilities from freezing during ColPro operations.

3-8.3.2 HVAC for New Facilities

HVAC requirements for the design of new facilities are as follows:

- Design the HVAC equipment to incorporate the requirements of the ColPro system and maintain indoor design conditions.

- Locate the outside air intakes in an inaccessible location or secure the intakes by means of a standoff distance that inhibits the direct insertion of contaminants.

- Provide ventilation isolation zones by separating HVAC systems.

3-8.3.3 Indoor and Outdoor Design Temperatures

Indoor dry and wet bulb design temperatures and outdoor design temperatures must be determined in accordance with UFC 3-400-02, Design: Engineering Weather Data, and associated references as well as mission requirements.

3-8.3.4 Outside Air Ventilation Rate per Occupant

The target outside air intake rate per occupant must conform to ASHRAE Standard 62.1. The default air intake rate is 7 L/s (15 cfm) per building occupant; as an alternative, a site-specific outdoor air intake rate may be calculated using the ventilation rate procedure in ASHRAE Standard 62.1, Sections 6.2.1 through 6.2.9.

3-8.4 Ductwork

Ductwork that serves the protective area during normal operations but is not required during ColPro operations must be closed off and isolated by means of low-leakage dampers at the protective area envelope. During ColPro operations, the ColPro system must maintain pressure on the isolation dampers under all conditions and thereby prohibit contaminated air from entering the protective area. The leakage rating of the isolation dampers must be selected based on an economic comparison of damper leakage and additional filtration capacity. Isolation damper position indicators must be included to visually identify the open and closed positions from within the protective area, if possible, or failure to move to the appropriate ColPro position. The isolation damper position must also be visually annunciated at the ColPro system control panel.

Ductwork must have the proper configuration or construction to prevent unfiltered air from leaking from the ductwork into the protective area and from an unprotected area into return air ductwork that is under a negative pressure. The designer should avoid locating ductwork carrying clean filtered air in a contaminated environment (that is, outside the protective area envelope), and locating ductwork carrying unfiltered air in a clean environment (that is, inside the protective area envelope). If these situations cannot be avoided, ductwork carrying filtered air must be under a positive pressure when located in a contaminated environment, and ductwork carrying unfiltered air must be under a negative pressure when located in a clean environment. If these duct pressures cannot be met or if differential pressures are uncertain, then the ductwork should be sealed by welding seams or other methods and leak tested.

3-8.5 Doors and Windows

Doors and windows in the protective area envelope must be weather sealed to reduce the air leakage rate and must have a clear, easy-to-read sign stating that the door or window must not be opened during a CBR event. Door positions should be monitored and visually annunciated at the ColPro system control panel. The 2005 *ASHRAE Handbook Fundamentals* provides air leakage calculation procedures to determine the additional air intake requirement (refer to Appendix F, Determining the Building Protection Factor).

3-8.6 ColPro Filtration System Design

The ColPro filtration system is the most critical part of the ColPro system.

3-8.6.1 ColPro Filtration System Configuration

The ColPro filtration system must have the proper configuration to prevent unfiltered air from leaking from the housing and ductwork into the protective area, as follows:

- Dirty Mechanical Room (or Outside) – Blow Through Design (Preferred). If located outside or in a dirty mechanical room (that is, outside the protective area envelope), it must be designed as a blow-through system with the blower located before the ColPro filtration system. Considering the difficulty of changing out filters located in clean mechanical rooms without contaminating the protective area, whenever possible filtration systems should be located external to the building or in a dirty mechanical room with outside access via a non-protected route. For additional information, refer to UFC 3-340-01.

- Clean Mechanical Room – Draw Through Design. If located in a clean mechanical room (that is, inside the protective area envelope) and drawing in the contaminated air through a ductwork system, it must be designed as a draw-through system with the blower located after the ColPro filtration system. . The protected mechanical rooms should meet the same overpressure requirements as the protective area. For additional information, refer to UFC 3-340-01.

- Clean Mechanical Room – Blow Through Design. If located in a clean mechanical room with a lower overpressure protection level than the protected area and the mechanical room can become potentially dirty, it shall

be designed as a blow-through filtration system with the blower located before the filtration system. The discharge duct or plenum of the blower and before the filtration system shall be of gas-tight design and the pressure decay tested to ASME N510 requirements. The protected mechanical rooms will have a lower overpressure protection requirement than the protective area.

The total static pressure of the ColPro filtration system blower must be designed to allow for a filtration system with dirty filters, ductwork system pressure losses, and the overpressure requirement of the protective area. The ColPro filtration system fans can be equipped with a variable frequency drive or inlet vanes to adjust the airflow rate to maintain the desired overpressure in the protective area. The variable airflow will allow the system to adjust for clean or dirty filters and changes in air density from winter to summer conditions. The ColPro filtration system must be designed for zero bypass around the HEPA filters and carbon adsorbers.

3-8.6.2 **Filtration Equipment**

A number of ColPro filtration systems are available from both the military and commercial suppliers (refer to Appendix G, ColPro Filtration System Equipment, for more information). If commercial filtration systems are used, the mechanical system designer should have the technical expertise to prepare specifications that meet military filtration system requirements. For continuously operated filtration systems, accessory equipment such as moisture eliminators or baffles to prevent the filters from being exposed to water droplets and large particulate prefilters must be considered to protect the filtration system.

3-8.6.2.1 **Filter Sections**

A ColPro filtration system unit requires a HEPA filter (minimum efficiency reporting value MERV 17) and a carbon adsorber in series. In addition, a roughing filter (MERV 8), followed by a prefilter (MERV 13 to 15), is typically used upstream of the HEPA filters to collect large dust particles and extend the life of the HEPA filters. HEPA filters without a prefilter can be fully loaded after 9 months of continuous use. A prefilter extends the life of the HEPA filter to about 2 to 4 years of continuous use. A postfilter (MERV 15), which collects carbon that has separated from the adsorber and prevents it from being distributed in the HVAC system, is optional. The postfilter is most commonly used with non-military carbon adsorbers. The entire filter train described above is as follows:

- Roughing filter (MERV 8)
- Prefilter (MERV 13 to 15)
- HEPA filtration (MERV 17)
- Carbon adsorber
- Postfilter (MERV 15, for non-military applications)

3-8.6.2.2 **Filter Housings**

Housings must be off-the-shelf units that are developed by the military, meet Naval Sea Systems Command (NAVSEA) Navy Drawing 6573690, or are designed and constructed to meet the basic requirements identified in American Society of Mechanical Engineers (ASME) AG-1, Code on Nuclear Air and Gas Treatment, and applicable sections of ASME N509, Nuclear Power Plant Air-Cleaning Units and Components. Housings must be designed for the pressure that will be encountered. Challenge test ports for in-place testing must be incorporated into the system housing or elsewhere in the system ductwork. Pressure test ports for measuring differential pressures across the roughing filter, prefilter, HEPA filter, and carbon adsorber must be incorporated into the filter housing. Refer to Appendix G, ColPro Filtration System Equipment, for additional information.

3-8.6.2.3 **HEPA Filters**

HEPA filters and frames must meet the materials, design, inspection, fabrication, and quality assurance requirements and be marked with the nameplate data specified in ASME AG-1, Section F, or in MIL-PRF-51526B. HEPA filters must have at least a 99.97 percent particle capture efficiency when challenged, at the rated airflow, by aerosol particles having a mean particle diameter of 0.3 microns. The pressure drop across clean HEPA filters ranges from 245 to 380 Pa (1.0 to 1.5 in wg); the pressure drop across dirty HEPA filters ranges from 490 to 850 Pa (2.0 to 3.5 in wg).

3-8.6.2.4 **Chemical Adsorber Capabilities**

A ColPro filtration system for building protection requires the capability to remove a broad spectrum of chemical vapors and gases from an air stream with a very high efficiency. Although there are several methods of filtration, the current standard for filtering chemicals is the carbon adsorber, which is a packed bed of impregnated, activated carbon granules. The carbon adsorber employs two different processes to remove the chemical agents: physical adsorption and chemical reaction. Some TICs, such as chlorine gas, cannot be adsorbed but must be neutralized through chemical reaction. To remove warfare agents, military carbon adsorbers use copper-silver-zinc molybdenium-triethylenediamine (ASZM-TEDA) impregnated carbon, which also removes specific TICs.

The Edgewood Chemical Biological Center has evaluated and performed limited testing on the effectiveness of ASZM-TEDA carbon in removing TICs. Of the 98 TICs identified, 34 are effectively removed, 33 are marginally removed, and 31 are poorly removed. To determine the effectiveness of the ColPro filtration system equipment, it is critical to conduct a survey of available sources of TICs and TIMs within proximity of the facility. Possible sources include nearby chemical plants, chemical storage facilities, swimming pools with large chlorine tanks, streets or highways with heavy truck traffic, and rail lines with freight traffic. Some information on chemicals stored in buildings near the site may be available from the local fire department, facility federal fire chief, HAZMAT team, or local emergency planning committee.

After sources of TICs and TIMs in the proximity of a facility have been identified, the installation manager or designer should contact the Joint Program for Collective Protection (JPM ColPro) to verify that the chemicals of concern will be removed by ASZM-TEDA carbon. Contact information for JPM ColPro is available at

http://www.jpeocbd.osd.mil. To ensure adequate protection, it may be necessary to add a filtration element to the filter train to remove specific TICs or TIMs that are transported near, or stored in or near, the facility. Selection of filtration element materials or coatings that are chemically resistant to the TIC or TIM of concern may also be necessary.

3-8.6.2.5 **Carbon Adsorber Units**

Several types of large-volume chemical vapor carbon adsorber units and systems that are available from both the military and commercial suppliers apply to CBR building protection. Military-procured adsorbers conforming to MIL-PRF-51525B, EA-DTL-1705E, and EA-DTL-1706B have the advantage of being pre-approved for use on military installations, while commercially available equipment requires additional government quality testing and must be government approved. Refer to Appendix G, ColPro Filtration System Equipment, for additional information on military and commercial carbon adsorber units.

3-8.6.2.6 **Military Carbon Adsorber Media**

The standard carbon for military applications is impregnated with ASZM-TEDA in accordance with U.S. Army Edgewood Chemical Biological Center (ECBC) specification MIL-DTL-32101. The adsorption capability of the carbon media must meet the criteria listed in MIL-DTL-32101.

3-8.6.3 **Leak Testing**

The design must provide adequate filter access for ColPro filtration system testing. The ColPro filtration system must be subjected to in-place leak tests to ensure that critical filter-to-housing seals do not allow leakage around the filters. For information on ColPro filtration system testing during startup and operation of the ColPro system, refer to Chapter 4, Startup, Operation, and Maintenance of the ColPro System; Appendix G, ColPro Filtration System Equipment; and Appendix H, ColPro Filtration System Testing Requirements.

3-8.7 **Standby Collective Protection Control System and Operational Requirements**

The ColPro control system must be located in the protective area. The preferable location is a security check point that (1) is manned during all work hours and (2) has indicators of a security breach signifying an unauthorized opening of a door. In addition, the ColPro control system must have the following capabilities and features:

- When the ColPro system is energized through a control panel switch, or PC-based control system, all other facility systems not required during ColPro control system operations are de-energized. Examples of these other systems are normal outside air fans, exhaust fans, and recirculation fans that are in the building but outside the protective area envelope.

- An indicator light at the ColPro control panel or operator display monitors the position of all isolation dampers and doors to the protective area. The ColPro control panel or operator display must indicate all device positions (open or closed) or failure to operate.

- In large systems, an indicator shows whether the dampers or doors are in the correct position during ColPro control system operation. In small systems, consisting of three doors or less and five dampers or less, individual indicator lights are not required; a single light indicating failure is acceptable.

- The control panel or operator display monitors the protective area overpressure with reference to the atmosphere.

- In shelter-in-place systems, the control panel or operator display monitors and displays the carbon monoxide concentration.

- It is recommended that an alarm or indicator be installed in the mechanical room to indicate when normal HVAC control functions are being overridden. This will prevent false troubleshooting when HVAC equipment is de-energized by the Standby Collective Protection Control System.

3-9 DESIGN CONSIDERATIONS FOR BUILDING DECONTAMINATION

3-9.1 Retention of CBR Agents Released into a Building

If CBR agents are released into a building, the normal exchange of the indoor air with the outdoor air by way of natural air building leakage purges a portion of the contaminants released. However, the following processes retain a portion of the agents in the building over time:

- Chemical agents in the liquid phase are absorbed by building materials and furnishings and by contents of the building. The agents desorb slowly over time.

- Chemical agents in the gas phase are absorbed or adsorbed by building materials. The agents desorb slowly over time.

- Biological and radiological aerosols and other solid aerosols settle onto surfaces or are forced into small openings, such as those on computers, at a rate dependent on aerodynamic particle size and air movement. They may be re-aerosolized with the movement of people, air, and equipment in the building or with changes in temperature and humidity.

3-9.2 Decontamination Measures

Immediately after release, measures must be taken to purge, disinfect, decontaminate, or contain agents. Otherwise, the agents can be transported to and deposited onto inaccessible surfaces in the building, greatly complicating the decontamination process. Decontamination and disinfection range from simply removing the agent with soap and water to using complex procedures for neutralization, cleaning, or accelerated desorption.

3-9.3 Design Objectives

There are three objectives in designing a building to minimize agent retention and to facilitate decontamination:

1. To make surfaces and materials in the building less adsorbent. This can be done by minimizing pores, using materials or coatings that can resist agent penetration and absorption, using the smallest openings necessary for their purpose, and using rounded corners instead of square joints.

2. To make accessible for decontamination all surfaces on which agents are likely to deposit.

3. To design certain areas to accommodate the use of water in large volumes for decontamination.

3-9.3.1 Making Surfaces and Materials Less Adsorbent

Chemical agent resistance is defined by the rate at which a material absorbs chemical agents, with minimal change in its physical and chemical properties and minimal impact by standard CBR liquid decontamination solutions. Many plastics and elastomers readily absorb chemical agents such as mustard and nerve agents, which are strong solvents. Measures to make surfaces and materials less adsorbent are as follows:

- Minimize the use of curtains and fabric wall coverings.

- Avoid open-face insulation in ducts and plenums.

- Select plastics, polymers, paints, sealants, and other construction materials for the building for their resistance to chemical agents, regardless of whether the material is likely to be exposed to an agent in the form of liquid or vapor. Note, however, that the practicality of doing so is limited because agent-resistant materials may not have acceptable physical properties, availability, cost, and aesthetic qualities.

There is no standard criterion for the rate of chemical absorption. Chemical agent tests have shown that after exposure to a liquid agent at a concentration of 10.0 g/m^2 (0.3 oz/ft^2), the most-resistant materials desorb the agent at very low rates, such as 3 μg/cm^2 (98 noz/ft^2). Results of tests on various plastics, elastomers, and sealants are available in reports from the Chemical Biological Information Analysis Center (CBIAC) at Aberdeen Proving Ground, Maryland.

3-9.3.2 Making Surfaces Accessible for Decontamination

The principal consideration with regard to accessibility for decontamination is access to ducts and plenums. Access ports should be located to facilitate cleaning of ducts and plenums.

3-9.3.3 Designing for Ease of Decontamination with Water

Decontamination with large volumes of water applies primarily to areas with a high likelihood of becoming contaminated, such as shipping and receiving areas, mailrooms, lobbies, and airlocks. Design considerations, as follows, are similar to those for a medical operating room:

- Minimize sharp corners and sharp edges that could allow cracks to propagate to inaccessible areas.
- Slope the floor slightly to facilitate collection of water and decontaminants.
- Construct floor drains for the containment of run-off.
- Select materials and coatings for ease of cleaning and resistance to aggressive decontaminants and biocides.

CHAPTER 4

STARTUP, OPERATION, AND MAINTENANCE OF THE COLPRO SYSTEM

4-1 STARTUP OF COLPRO SYSTEM

After installation of a ColPro system, adherence to the startup procedures is important to ensure that the system is operating properly.

4-1.1 Airflow Balancing

The ventilation system should be balanced to ensure that the design airflow rates are being provided under the normal and ColPro operation modes. At a minimum, outside, return, and supply airflows should be balanced. It may also be necessary to balance other parts of the air supply, return, or exhaust system.

4-1.2 Initial ColPro Filtration System Filter Bank In-Place Testing

It is recommended that an independent testing agency perform a filter bank in-place test of the ColPro filtration system after installation. Refer to Appendix H, ColPro Filtration System Testing Requirements.

4-1.3 Performance Testing

After testing, adjusting, and balancing are complete, each system must be tested as a whole to determine that all items perform as integral parts of the system and that pressures, temperatures, and conditions are met and evenly controlled throughout the building. Corrections and adjustments must be made as necessary to produce the conditions indicated or specified. An experienced HVAC engineer should conduct capacity tests and general operating tests to demonstrate that the entire system is functioning according to specifications. It is recommended that an experienced ColPro engineer be present to observe the performance testing, or perform separate certification or performance testing, to verify that all CBR requirements are met.

4-2 COLPRO SYSTEM OPERATIONAL TESTING

Standby ColPro systems should be tested and inspected once each month to ensure that they are operating as designed and are in good operating condition. Continuously operated systems should be monitored monthly to ensure that they are operating properly. Monthly tests and inspections should include, at a minimum, verification that the design overpressure is met in the protective area. In addition, the following should be checked: the pressure drop across the roughing filters, pre-filters, and HEPA filters; the damper operation; the heating and cooling equipment; the protective area envelope to ensure that weather stripping is in place and that no modifications or penetrations have been made; the filter housing for corrosion and deterioration; and if applicable, the operation of the back-up generator.

4-3 COLPRO FILTRATION SYSTEM

In addition to the manufacturer’s recommended maintenance requirements, there are the following filter replacement and testing requirements.

4-3.1 Airflow Testing

The ColPro filtration system airflow rate should be tested annually and re-balanced as necessary to maintain the design airflow rate.

4-3.2 Subsequent ColPro Filtration System Filter Bank In-Place Testing

The system must be tested after replacement of the HEPA filters or carbon adsorbers. It is recommended, but not required, that the system be tested every 12 months.

4-3.3 Testing Cost

The facility operating budget must include the periodic testing. In 2005, the approximate cost for testing a single filtration system was $15,000; testing for each additional system at the same facility was $3,000.

4-4 IDENTIFICATION OF PROTECTIVE AREA

A floor plan should identify the protective area for the facility occupants. The floor plan should be included in the facility protective action plan and posted at a central location in the building. For additional information, refer to Appendix E, Protective Action Plan: Operational Procedures to Protect Existing Buildings and Their Occupants from Airborne Hazards.

4-5 TRAINING

All facility personnel (for example, security, maintenance, fire department rescue units, and occupational health and safety staff) potentially required to operate the ColPro system must receive training. Additional training of the facility occupants should be performed in a manner similar to fire evacuation drills. The protective action coordinator (PAC) or someone familiar with the ColPro system, such as the design engineer or the construction contractor, should provide the training.

4-6 OPERATING INSTRUCTIONS

Operating instructions and system diagrams for standby ColPro systems must be provided to the building tenant and displayed at eye level next to the ColPro system control panel. The operating instructions must describe, in short and concise language, the steps required to operate the ColPro system. All ColPro system control switches and indicators must be clearly marked and identified.

4-7 OPERATION AND MAINTENANCE MANUAL

An O&M manual must be provided for the ColPro system and located together with the protective action plan for the installation. The O&M manual must contain system operating instructions; emergency operation procedures; preventive maintenance, troubleshooting, and corrective maintenance information; periodic maintenance recommendations; critical instructions; and a spare parts list.

4-8 FILTER REPLACEMENT

4-8.1 Carbon Adsorber Replacement

4-8.1.1 Service Life

The service life of an impregnated carbon adsorber is defined by the reactive gas life and the physical adsorber life. The adsorber life against reactive gases is generally the shorter of the two; therefore, the replacement cycle is usually based on the degradation in reactive gas capacity. Adsorber life is site specific, although the environmental air quality affects both capacities. The adsorption of organics (air pollutants) reduces the physical adsorption life. Adsorber capacity for reactive gases such as chlorine,

hydrogen cyanide, and CK diminishes gradually over time and, with ASZM-TEDA carbon, is typically lost within 2 to 4 years of exposure to humidity in ambient air. The rate at which the impregnant degrades varies with the temperature and the amount of water reacting with the carbon bed. Degradation begins once an adsorber is opened to the atmosphere. The degradation is more rapid when air is being drawn through the adsorber because atmospheric pollutants contribute to the degradation. Adsorber life can also be affected by loosening of the carbon as air is drawn through the adsorber, a condition that can be determined by conducting an in-place leak test at certain intervals.

Surveillance testing has shown that substantial physical adsorption capacity can remain after air is drawn through an adsorber continuously for periods as long as 10 years. Studies have shown that adsorbers in service for long periods show very little degradation in adsorber life against nerve or mustard gas when an adsorber is operated in a low-pollution environment away from heavy industry and vehicular traffic. Adsorbers used where there are high levels of air pollution, however, showed substantial degradation in capacity.

4-8.1.2 **Replacement Considerations**

Carbon adsorbers must be replaced on a regular basis. Depending on the local atmospheric pollutants, adsorber change-out can be expected to be required every 2 to 4 years.

The carbon adsorber should be replaced based on the results of CK challenge tests to evaluate the reactive gas life and dimethylmethylphosphonate (DMMP) challenge tests to determine the physical adsorbent life of samples removed from the adsorption system. The adsorber design must include a means to obtain samples of the adsorbent, either by removing a carbon adsorber from the ColPro filtration system or by incorporating into the filtration system a set of sample pilot canisters that represents the total carbon adsorber bed thickness. Adsorbers not contaminated by chemical surety materials or by other hazardous materials can be refilled by the manufacturer, but the owner must dispose of any contaminated carbon in accordance with local, state, and federal regulations. Carbon adsorbers that have been contaminated by CBR agents may have to be changed by personnel wearing IPE/PPE and must be disposed of in accordance with local, state, and federal hazardous waste regulations.

4-8.2 **HEPA Filter Replacement**

Depending on its structural capability, a HEPA filter can have a dust buildup static pressure drop of up to 2,488 Pa (10 in wg). However, HEPA filters are typically changed when the dust buildup is approximately 746 to 995 Pa (3 to 4 in wg), thereby limiting the system static pressure requirements. Change-out of a HEPA filter with an 85 percent prefilter can be expected to be necessary after 2 to 4 years of continuous use. However, filter loading is highly dependent on local environmental conditions; therefore, the effective life of the filter may vary. An economic analysis should be performed for the site-specific location to determine at what static pressure drop the filters require changing. The economic analysis should include the cost of HEPA filter replacement, the energy cost for the fan static pressure, and the initial cost of the system for the static pressure required.

APPENDIX A

REFERENCES

GOVERNMENT PUBLICATIONS:

1. Department of the Air Force Headquarters Washington, DC	AFM 105-7, Field Behavior of NBC Agents (Including Smoke and Incendiaries), 3 November 1986. AFM 355-7, Potential Military Chemical/Biological Agents and Compounds, 12 December 1990.
2. Department of the Army Headquarters Washington, DC	FM 3-6, Field Behavior of NBC Agents (Including Smoke and Incendiaries), 3 November 1986. FM 3-9, Potential Military Chemical/Biological Agents and Compounds, 12 December 1990.
3. Department of Defense	*Final Report of Task Force 25: Hazard from Industrial Chemicals*, 18 March 1996.
4. Department of Energy	DOE-HDBK-1169-2003, Nuclear Air Cleaning Handbook, 4th edition, 2003.
5. Department of the Navy Headquarters Washington, DC	P-467, Potential Military Chemical/Biological Agents and Compounds, 12 December 1990.
6. Federal Emergency Management Agency (FEMA)	FEMA 320, Taking Shelter from the Storm: Building a Safe Room Inside Your House, March 2004. FEMA 361, Design and Construction Guidance for Community Shelters, July 2000.
7. Headquarters Air Force Doctrine Center Maxwell Air Force Base, AL	AFTTP(I) 3-2.44, Multiservice Tactics, Techniques, And Procedures For Nuclear, Biological, And Chemical Reconnaissance, 30 July 2004. AFTTP(I) 3-2.46, Multiservice Tactics,

	Techniques, and Procedures for Nuclear, Biological, and Chemical (NBC) Protection, 2 June 2003.
8. Marine Corps Combat Development Command Quantico, VA	MCWP 3-37.2, Multiservice Tactics, Techniques, and Procedures for Nuclear, Biological, and Chemical (NBC) Protection, 2 June 2003. MCWP 3-37.4, Multiservice Tactics, Techniques, And Procedures For Nuclear, Biological, And Chemical Reconnaissance, 30 July 2004.
9. Naval Facilities Engineering Command Fort Hueneme, CA	OPNAVINST 3440.17, Navy Installation Emergency Management Program, 22 July 2005.
10. Naval Sea Systems Command Surface Warfare Center Washington Navy Yard, DC	Navy Drawing 6573690.
11. Navy Warfare Development Command Newport, RI	NTTP 3-11.27, Multiservice Tactics, Techniques, and Procedures for Nuclear, Biological, and Chemical (NBC) Protection, 2 June 2003. NTTP 3-11.29, Multiservice Tactics, Techniques, And Procedures For Nuclear, Biological, And Chemical Reconnaissance, 30 July 2004.
12. Unified Facilities Criteria	UFC 3-340-01, Design and Analysis of Hardened Structures to Conventional Weapons Effects, 30 June 2002. UFC 3-400-02, Design: Engineering Weather Data, 28 February 2003. UFC 4-010-01, DoD Minimum Antiterrorism Standards for Buildings, 8 October 2003. UFC 4-010-02, Design (FOUO): DoD

	Minimum Standoff Distances for Buildings, 8 October 2003.
	UFC 4-020-01, Security Engineering Planning Manual, currently being completed.
	UFC 4-020-02, Security Engineering Design Manual, currently being completed.
	UFC 4-024-02, Security Engineering: Design Examples for Airborne Chemical, Biological, and Radiological Protection for Buildings, currently being completed.
13. U.S. Army Corps of Engineers	UFGS 23 40 00.00 10, Chemical, Biological, and Radiological (CBR) Air Filtration System, October 2006.
14. U.S. Army Edgewood Chemical Biological Center	EA-DTL-1705E, Filter Assembly, Gas, 120 CFM Assembly, 3 April 2001.
Aberdeen Proving Grounds, MD	EA-DTL-1706B, Filters, Gas, 600 and 1200 CFM Assemblies, 1 July 1998.
	MIL-DTL-32101, Detail Specification, Carbon, Activated, Impregnated, Copper-Silver-Zinc-Molybdenum-Triethylenediamine (ASZM-TEDA), 19 September 2002.
	MIL-PRF-32016A, Performance Specification: Cell, Gas Phase, Adsorber, 22 April 2002.
	MIL-PRF-51525B, Performance Specification, Filter, Gas, 200 CFM, M98, 15 December 2004.
	MIL-PRF-51526B, Performance Specification: Filter, Particulate, 200 CFM, M98, 15 December 2004.
15. U.S. Army Training and Doctrine Command	FM 3-11.4 (FM 3-4), Multiservice Tactics, Techniques, and Procedures for Nuclear,

Fort Monroe, VA	Biological, and Chemical (NBC) Protection, 2 June 2003. FM 3-11.19, Multiservice Tactics, Techniques, And Procedures For Nuclear, Biological, And Chemical Reconnaissance, 30 July 2004.
16. U.S. Marine Corps Headquarters Washington, DC	FMFM 7-11-H, Field Behavior of NBC Agents (Including Smoke and Incendiaries), 3 November 1986.

NON-GOVERNMENT PUBLICATIONS:

1. American Society of Heating, Refrigerating and Air-Conditioning Engineers (ASHRAE)	*ASHRAE Handbook Fundamentals*, 2005. Standard 52.2, Method of Testing General Ventilation Air-Cleaning Devices for Removal Efficiency by Particle Size, 2007. Standard 62.1, Ventilation for Acceptable Indoor Air Quality, 2007.
2. American Society of Mechanical Engineers (ASME)	AG-1, Code on Nuclear Air and Gas Treatment, 2003. N509, Nuclear Power Plant Air-Cleaning Units and Components, 2002. N510, Testing of Nuclear Air Treatment Systems, 2007. NQA-1, Quality Assurance Requirements for Nuclear Facility Applications, 2004.
3. American Society for Testing and Materials (ASTM)	E779, Standard Test Method for Determining Air Leakage Rate by Fan Pressurization, 2003.
4. Institute of Environmental Sciences and Technology (IEST)	IEST RP-CC-008, Gas-Phase Adsorber Cells, 1984.
5. National Fire Protection Association (NFPA)	NFPA 101, *Life Safety Code*®, 2006.

6. Underwriters Laboratories Inc. (UL) UL 586, High-Efficiency, Particulate, Air Filter Units, 1996.

APPENDIX B

GLOSSARY

This glossary includes acronyms, abbreviations, and specialized terms used in the foreword, the body, and the appendices of this document.

B-1 ACRONYMS AND ABBREVIATIONS

ACH	air changes per hour
AFCESA	Air Force Civil Engineer Support Agency
AFM	Air Force Manual
AFTTP(I)	Air Force Tactics, Techniques, and Procedures (Interservice)
AHU	air-handling unit
ASHRAE	American Society of Heating, Refrigerating and Air-Conditioning Engineers
ASME	American Society of Mechanical Engineers
ASTM	American Society for Testing and Materials
ASZM-TEDA	copper-silver-zinc-molybdenum-triethylenediamine
CAM	chemical agent monitor
CBIAC	Chemical Biological Information Analysis Center
CBR	chemical, biological, or radiological
CC	cooling coil
CCA	contamination control area
CCB	Construction Criteria Base
CCR	Criteria Change Request
CFM	cubic feet per minute
CK	cyanogen chloride
CM	centimeter(s)
COLPRO	collective protection

CONUS	continental U.S.
D-1	damper number 1
D-2	damper number 2
D-3	damper number 3
DCS	Deputy Chief of Staff
DMMP	dimethylmethylphosphonate
DoD	Department of Defense
DOE	Department of Energy
EA-DTL	Edgewood Area Detail
ECBC	U.S. Army Edgewood Chemical Biological Center
ELA	effective leakage area
EQ.	equation
FEMA	Federal Emergency Management Agency
FFA	fan filter assembly
FM	Field Manual
FMFM	Fleet Marine Force Manual
FOUO	for official use only
FT	foot or feet
G	gram(s)
GFE	government-furnished equipment
HAZMAT	hazardous materials
HC	heating coil
HEPA	high-efficiency particulate air
HFC-4310	decafluoropentane
HQUSACE	Headquarters, U.S. Army Corps of Engineers
HR	hour(s)

HVAC	heating, ventilating, and air-conditioning
IEST	Institute of Environmental Sciences and Technology
IN.	inch(es)
IN WG	inches of water gage
IPE/PPE	individual protective equipment / personal protective equipment
JPM ColPro	Joint Program for Collective Protection
KG	kilogram(s)
KM	kilometer(s)
L	liter(s)
LB	pound(s)
M	meter(s)
MCRF	multi-cell radial-flow
MCWP	Marine Corps Warfighting Publication
MERV	minimum efficiency reporting value
μg	microgram(s)
MIL-DTL	Military Detail Specification
MIL-PRF	Military Performance Specification
MIL-STD	Military Standard
MIN	minute(s)
MM	millimeter(s)
MPH	mile(s) per hour
NAVFAC	Naval Facilities Engineering Command
NAVSEA	Naval Sea Systems Command
NBC	nuclear, biological, and chemical
NFPA	National Fire Protection Association
NOZ	nano-ounce(s)

NSN	National Stock Number
NTTP	Navy Tactics, Techniques, and Procedures
O&M	operation and maintenance
OPNAV	Office of the Chief of Naval Operations
OZ	ounce(s)
P	pressure
Pa	Pascal
PAC	protective action coordinator
PC	personal computer
PPE	personal protective gear
PPM	parts per million
Q	infiltration rate
S	second(s)
TIC	toxic industrial chemical
TIM	toxic industrial material
UFC	Unified Facilities Criteria
UFGS	Unified Facilities Guide Specification
UL	Underwriters Laboratories Inc.
USACE	U.S. Army Corps of Engineers
USD (AT&L)	Under Secretary of Defense for Acquisition, Technology, and Logistics

B-2 TERMS

advance warning	an event, such as a credible warning or a warning under elevated threat conditions, that initiates operational actions to take to

	enhance protection
agent	a substance in the form of a TIC or TIM, biological or radiological agent, or military chemical, which together with the delivery tactic is a type of threat
airborne delivery tactics	methods that include external release of an agent (from an upwind standoff distance or into a fresh air intake) and internal release (through the ventilation system or into a building area)
areas of rescue assistance or areas of refuge	spaces where persons unable to use stairs can call for and await evacuation assistance from emergency personnel
assets	personnel, mission-essential equipment, and facilities
blower door assembly	an assembly consisting of a fan to provide airflow and pressure, a mounting frame for the fan, a differential pressure gage, and a calibrated device that measures the airflow rate into the facility during pressurization and out of the facility during depressurization
carbon adsorber	a packed bed of impregnated, activated carbon granules
CBR event	an airborne release involving a CBR agent and caused by an industrial accident or an intentional release either external or internal to the facility
challenge test ports	ports or openings used to inject a challenge agent into a filter housing or duct or to collect a sample from the housing or duct
class of overpressure	an overpressure range or goal that is established based on the anticipated duration of a CBR event, the value of assets in a facility, and the facility's emergency operation procedures
clean mechanical room	a mechanical room located inside the protective area in an uncontaminated environment
collective protection (ColPro)	provision of a contaminant-free area where personnel can function without individual protective equipment such as a mask and protective garments
containment protection mode	mode that consists of compartmentalizing the fire zones by closing the fire doors and, if the building is so equipped, the smoke dampers
contamination control area	an area where personnel can safely remove contaminated IPE/PPE, put on clean IPE/PPE, and bring items into or out of a protective area in a proper airflow environment using the

	appropriate contamination control procedures
ColPro filtration system	the filter unit, consisting of the filters, fan, and filter housing
ColPro system	the system that includes the ColPro filtration system, sealing measures, dampers, ductwork, and controls to provide collective protection
credible warning	a believable but nonspecific message informing of danger from an imminent attack that has yet to be confirmed and lacks sufficient information for effective prevention
delivery tactic	the method of delivering a CBR agent (external or internal release)
design basis threat	“the threat (aggressors, delivery tactics, and associated weapons, tools, or explosives) against which assets within the building must be protected and upon which the security engineering design of the building is based” (UFC 4-010-01)
dirty mechanical room	a mechanical room located in an area that may be contaminated with CBR agents
dwell time or dwell cycle	the period of time spent by personnel in an airlock to reduce the vapor level sufficiently to enter the next stage of the airlock or the protective area
envelope	everything that separates the interior of a building, or portion of a building, from the exterior environment, including the windows, walls, foundation, basement, slab, floor, ceiling, roof, and insulation
expedient	temporary
expeditionary situations	situations in which existing facilities are unavailable or inadequate for incorporating CBR protection features and transportable facilities are used for field applications
force protection conditions	a set of specific security measures promulgated by the commander after considering a variety of factors including the design basis threat, current events that might increase the risk of a terrorist attack, and observed suspicious activities
high-risk areas	portions of a building that are at a high risk of an internal release, such as mailrooms, lobby areas, and supply delivery areas with separate ventilation systems as well as unscreened public access areas and any other general-access areas
independent testing	a contractor or government agency that is financially and

agency	corporately independent of the mechanical subcontractor and reports to and is paid by the government or the prime contractor
infiltration	the uncontrolled exchange of the building's interior air with outside air
Level A	a military level of packing that provides protection required to meet the most severe worldwide shipment, handling, and storage conditions
Level B	a military level of packing that provides protection required to meet moderate worldwide shipment, handling, and storage conditions
level of protection	the degree to which an asset is protected against injury or damage from a CBR event
low-leakage damper	a damper having a leakage rate of less than 15 L/s (3 cfm) per m^2 (ft^2) with a differential pressure of 250 Pa (1.0 in wg) across the damper
natural filtration	filtering that occurs when an agent is deposited in the building shell or on interior surfaces as air passes into and out of the building; generally, the tighter the building, the greater the effect of natural filtration
natural ventilation	the exchange of the building's internal air with outside air by means of intentional openings in the building envelope such as open doors and windows
overpressure	the difference in static pressure between the inside of a building and the ambient pressure outside of the building
pathogens	living disease-producing agents of biological origin, including bacteria, viruses, and fungi
prefilter	a low- to medium-efficiency filter that precedes the HEPA filter to remove large particulates
progressive collapse	the spread of an initial local failure from element to element, eventually resulting in the collapse of an entire structure or a disproportionately large part of it
protected mechanical room	a mechanical room located inside the protective area in an uncontaminated environment
protection factor	the ratio of the contaminant concentrations outside a shelter to concentrations inside the shelter

protective action plan	security measures and operational procedures to protect existing buildings and their occupants from airborne hazards by reducing vulnerability, preventing a release, reducing the likelihood that releases will affect building occupants, and mitigating the hazard once a release has occurred
protective area of a building	the ColPro area, where personnel are able to work or shelter without wearing IPE/PPE during release of a CBR agent
purge time	the period of time during which the unoccupied airlock is purged of toxic vapor after both airlock access doors have been closed
residence time	the time period that a given particle in an air steam is in contact with the carbon bed in a carbon adsorber
secondary enclosure	a portable enclosure system that can be installed within a facility if the facility cannot be sealed economically to maintain an overpressure but is suitable as a shell
shelter-in-place protection mode	a mode that consists of de-energizing the ventilation system and closing the outside air intake and exhaust dampers using a master control capability
stack effect	thermally driven air density differences between the building indoor and outdoor ambient conditions
standard conditions	atmospheric conditions at standard temperature, 21 °C (70 °F), and one atmosphere of pressure
standby mode	mode in which the ColPro system is energized only when there is a known threat of attack
standoff distance	a distance maintained between a building or portion thereof and the potential location for a release
threat	aggressors, delivery tactics, and associated weapons, tools, or explosives against which a facility is protected; established by evaluating aggressor likelihood and objectives with respect to the assets
threat type	a combination of the agent type (chemical, biological, or radiological) and the delivery tactic (external or internal)
toxins	metabolic byproducts of living organisms that are classified as biological agents even though they are nonliving substances
unprotected mechanical room	a mechanical room located outside the protective area in a contaminated environment

APPENDIX C

AIRLOCKS AND ENTRY OR EXIT PROCESSING

C-1 PURPOSE AND GENERAL FUNCTION OF AN AIRLOCK

Airlocks are used in facilities with a high level of protection, where an overpressure must be maintained during ColPro operations. Airlocks serve the purpose of allowing entry and exit without a substantial exchange of air through open doorways. To allow entry or exit processing, an airlock maintains a pressure differential continuously in the room or building that is protected (for example, the protective area), isolated, or environmentally controlled. The pressure differential is produced by fans, wind, or buoyancy effect. If ventilated with filtered air, an airlock allows entry or exit to occur while contamination is present outside the airlock without introducing airborne contaminants into the protected space. In the case of chemical agents, an airlock can also be used effectively as a safe place to perform monitoring.

To prevent the direct transport of airborne contaminants through the airlock, people must pause in the airlock for a specified purging period during entry or exit. However, this purging alone does not prevent the transport of contamination through the airlock. Entering from a contaminated area also requires removing or neutralizing contaminants deposited on the entering person's clothing, mask, skin, or hair. This is normally achieved by removing outer clothing immediately before entering the airlock or while in the airlock and by washing or showering.

C-2 AIRLOCK DESCRIPTION

Airlocks can be single stage or two stage, as described below. Airlock pressure is less positive than in the protective area and more positive than in the unprotected area. Airflow is from the protective area through the airlock to the unprotected area.

C-2.1 Single-Stage Airlock

The single-stage airlock is shown in Figure C-1. Airflow from the protective area or filter blower cascades through the airlock, thereby continuously purging contaminants from the airlock. Airflow from the top of the chamber to the bottom enhances protection by reducing contaminated air in the breathing zone (refer to Paragraph C-4, Regulation of Airlock Flow).

C-2.2 Two-Stage Airlock

A two-stage airlock consists of two airlocks in series. As shown in Figure C-2, the two-stage airlock has an outer first-stage and an inner second-stage compartment. Clean airflow is provided from the protective area or by a dedicated filter blower unit connected to the inner compartment at the filtered air inlet (refer to Paragraph C-4, Regulation of Airlock Flow). The airlock shown in Figure C-2 is designed for a 94 L/s (200 cfm) filter blower unit and is intended for retrofitting to existing facilities.

Figure C-1. Single-Stage Airlock

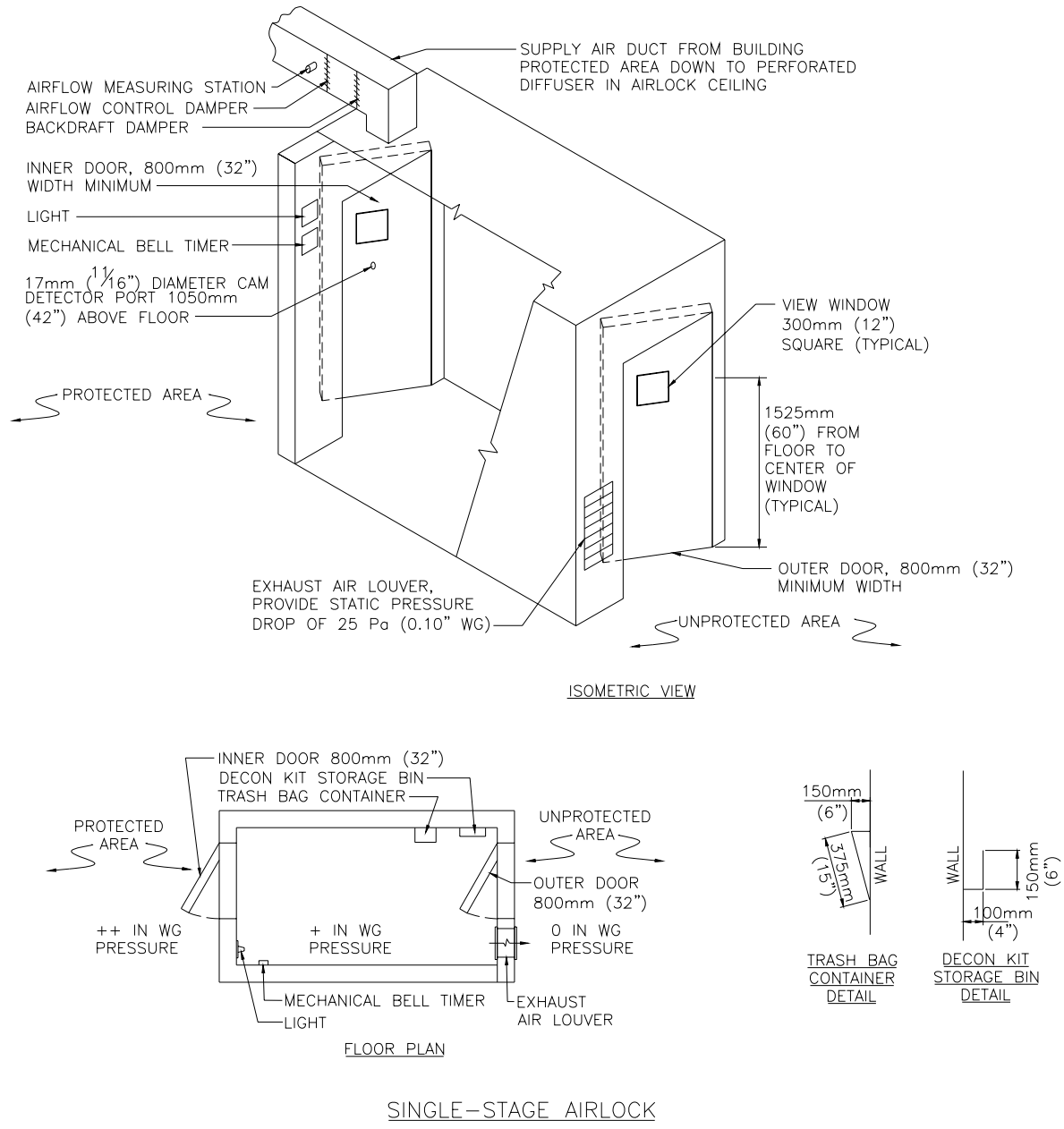

NOTES:

1. Airlock compartment is approximately 1420mm (56") wide by 2235mm (88") long by 2235 (88") high measuring from interior surfaces.
2. Interior volume of the airlock is 7.1 cubic meters (251 cubic feet).
3. The trash bag container and decontamination kit storage bin are 375mm (15") long.
4. Bottom of exhaust air louver is 200mm (8") above the floor.
5. The mechanical bell timer is 1830mm (72") above the floor.
6. The supply air diffuser is centered between the side walls and 300mm (12") from the inner door.

Figure C-2. Two-Stage Airlock

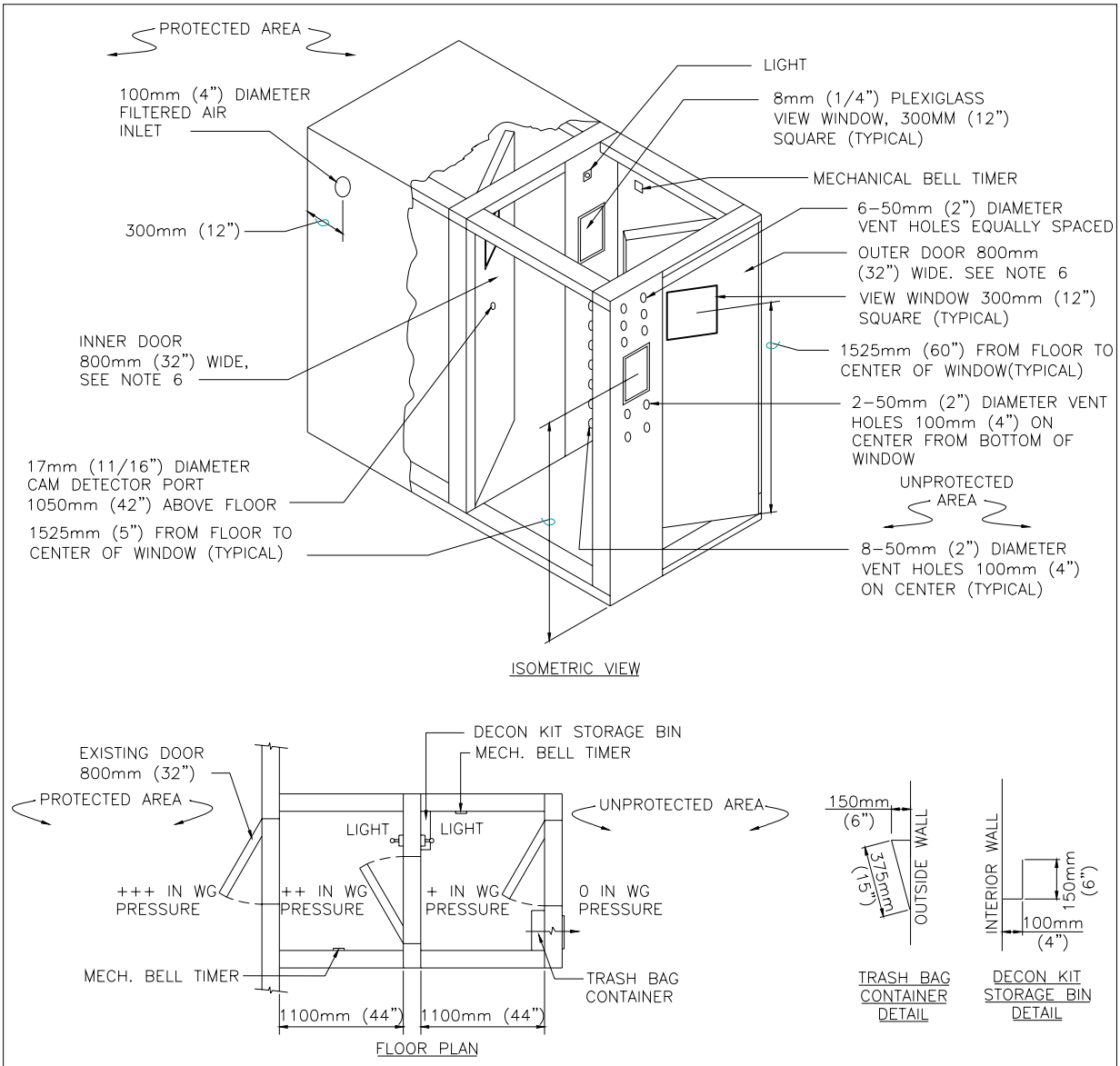

TWO-STAGE AIRLOCK

NOTES:

1. Dimensions and shpae of the airlock chambers vary to suit the facility. Airlock inner and outer compartments as shown are approximately 1350mm (54") wide by 1100mm (44") long by 2130mm (7') high measuring from interior surfaces. Internal volume is 3.27 cubic meters (115.5 cubic feet).
2. The trash bag container and decontamination kit storage bin are 375mm (15") long.
3. Vent holes on the outer wall start 125mm (5") from the ceiling. Vent holes on the inner wall start 125mm (5") from the floor.
4. Mechanical bell timers are 1525mm (60") above the floor.
5. The filtered air inlet hole is 300mm (12") below the ceiling.
6. For main facility doors that are 900mm (36") wide, use inner airlock and outer doors that are 900mm (36") wide. The airlock inner and outer compartments will be approximately 1450mm (58") wide by 2130mm (7') high measuring from interior surfaces. Internal volume is 3.51m³ (124 ft³).

The outer compartment is used for personnel to remove protective garments while the airlock is being continuously purged by the flow of filtered air. After protective garments are removed, personnel enter the inner compartment, which is then purged of vapors for a set period of time, called the “dwell time” or “dwell cycle.” After the dwell cycle, personnel enter the protective area.

C-2.3 **Airlock Features**

Airlocks have the following common features:

1. Timers – Each compartment requires a mechanical bell timer for the personnel processing dwell times and airlock purge times. Personnel should check the process time to dwell before entering the protective area.

2. Windows – Each compartment requires a window for determining whether the compartment is occupied.

3. Lights – Artificial lights compensate for the lack of adequate natural lighting in the airlock.

4. Purge vents – Airlocks without a dedicated filter blower unit require a variable area purge vent or flow control valve to adjust the airflow rate and maintain the required purge rate. The two-stage airlock with a dedicated filter blower unit can have fixed rather than adjustable purge vents because the dedicated filter blower unit provides a constant volume of airflow.

5. Monitoring port – The monitoring port allows a chemical agent monitor (CAM) operator located in the inner compartment to insert the CAM detector inlet into the outer compartment. This allows the CAM operator to determine whether there is agent vapor in the outer compartment. With a negative reading of about 10 seconds each for the G and H agents (nerve and mustard agents), the operator may determine that a shorter or longer dwell period is required. A second CAM check for sorbed vapor can then be performed in the inner or second-stage compartment.

6. Caulking – All joints should be caulked or otherwise sealed to limit uncontrolled air leakage.

7. Paint – The interior and exterior surfaces must be painted with epoxy paint to minimize the sorption of liquid and vapor agent.

8. Clothing chute or trash bag container – A clothing chute allows contaminated clothing to be removed from the airlock and discarded outdoors without re-exposure of personnel to the contaminated atmosphere. As an alternative, plastic trash bags can be placed in the airlock so that personnel can seal clothing in the bag after removal.
   If there is no clothing chute, a trash bag container should be provided (refer to Paragraph C-7, Processing Procedure Recommendations).

9. Instructional signs – Basic personnel processing instructions should be stenciled on the outer and inner doors of the airlock, as shown in Tables C-1, C-2, C-3, and C-4.

Table C-1. Single-Stage Ingress Airlock Signs

Sign Text	Location
1. Ingress Airlock	1. Above the outer door
2. Do Not Open if Airlock Is Occupied	2. On the outer door
3. After Removal of IPE/PPE, Set Timer for 3 Minutes*	3. On the outer door below the other sign
4. Remove Mask Only After 3-Minute Dwell Time and CAM Check**	4. On the second door; read from inside the airlock compartment
5. CAM Check Port	5. On the second door above the CAM port

* Actual dwell time required is determined by equation C-1, below.
** Actual dwell time is determined by equation C-1, below.

Table C-2. Two-Stage Ingress Airlock Signs

Sign Text	Location
1. Two-Stage Ingress Airlock	1. Above the outer door
2. Do Not Open if Airlock Is Occupied	2. On the outer door
3. Upon Entering, Set Timer for 4 Minutes*	3. On the outer door below the other sign
4. Filtered Air Input	4. Near the filtered air inlet
5. CAM Check Port	5. On the second door above the CAM port
6. Remove Outer Garments before Processing to Next Compartment if Exposed to Chemical Agent	6. On the second door below the other sign; to be read from the outer compartment
7. Set Timer for 4 Minutes	7. On the second door; to be read from the inner compartment
8. Remove Mask Only After 4-Minute Dwell Time and CAM Check**	8. On the protective area door; to be read from the inner compartment

* Actual dwell time required is determined by equation C-1, below.
** Actual dwell time is determined by equation C-1, below.

Table C-3. Single-Stage Egress Airlock Signs

Sign Text	Location
1. Egress Airlock	1. Above the inner door
2. Do Not Open if Timer Has Not Expired or Airlock Is Occupied	2. On the inner door
3. Upon Entering, Set Timer for 3 Minutes*	3. On the inner door below the other sign
4. CAM Check Port	4. On the second door above the CAM port

* Actual purge time required is determined by equation C-1, below.

Table C-4. Two-Stage Egress Airlock Signs

Sign Text	Location
1. Two-Stage Egress Airlock	1. Above the inner door
2. Do Not Open if Timer Has Not Expired or Airlock Is Occupied	2. On the inner door
3. Upon Entering, Set Timer for 4 Minutes*	3. On the inner door below the other sign
4. Filtered Air Input	4. Near the filtered air inlet
5. CAM Check Port	5. On the second door above the CAM port

* Actual purge time required is determined by equation C-1, below.

C-3 PURGE RATE

C-3.1 Estimating the Airflow Rate

The performance of an airlock is measured by its purge rate, which is determined by the flow rate of clean air through it, the volume of the airlock, the mixing efficiency, and the rates at which contaminants are sorbed or deposited on inner surfaces of the airlock. The airflow rate needed for purging an airlock in a specified time can be estimated by the following equation C-1:

$$C/C_o = e^{-QT/V} \qquad \textit{(eq. C-1)}$$

where

C = concentration at time T
C_o = initial concentration
Q = airflow rate in cfm
T = time in minutes
V = volume of the airlock in ft^3

Airlocks are usually designed to achieve a three-log (99.9 percent) reduction in 5 minutes or less. For a three-log reduction, the equation simplifies to Q = 6.9 V/T. This equation does not account for sorption or deposition of agent on interior surfaces of the airlock. Therefore, airlocks are normally tested using aerosols or nondepositing tracer gases.

C-3.2 Benefit of a Two-Stage Airlock

Dividing an airlock into stages is a means of improving the purge rate with a given volume of purge flow. The benefit of using a two-stage airlock is that it will achieve a two-log, rather than a three-log, concentration reduction in each of the two sequential stages.

The following example illustrates the benefit of a two-stage airlock. An airlock that is 3.0 m (10.0 ft) long, 1.2 m (4.0 ft) wide, and 2.1 m (7.0 ft) high and is ventilated with 283 L/s (600 cfm) of filtered air achieves a three-log concentration reduction in 3.2 minutes according to equation C-1, shown above. If a center door is added to divide the airlock into two equal 1.5-m- (5.0-ft-) long stages, the purge period for each stage is 1.1 minutes for two logs. As people enter, they remain in the first stage 1.1 minutes and proceed to the second stage for a 1.1 minute purge to achieve a four-log purge in 2.2 minutes.

C-4 REGULATION OF AIRLOCK FLOW

There are multiple approaches for regulating airlock flow.

C-4.1 Vents

The most common approach is to vent clean air from the protective area through the airlock. This controlled leakage is driven by the overpressure in the protective area and is regulated by vents that are adjustable, weighted, or fixed at each end of the airlock. The disadvantage of this approach is that the purge rate can vary, and even decrease to zero, if the uncontrolled leakage rate of the protective area envelope increases and the user adjusts the vents to maintain the prescribed overpressure.

C-4.2 Exhaust Fan

An alternative is to use an exhaust fan drawing air from the airlock to achieve a relatively constant purge flow. The exhaust fan minimizes variations in the airlock flow rate but increases the variability in overpressure if the leakage varies over time in the protective area.

C-4.3 Dedicated Filter Unit

An approach that minimizes variability in both the purge flow and overpressure is to employ a dedicated filter unit for the airlock. With this approach, there is no vent between the protective area and the airlock. A dedicated filter unit can be employed in either a once-through mode or a recirculating mode, as follows:

- In the once-through mode, filtered air is introduced to the airlock at a point near the innermost door. It exits the airlock through vents in or around the outermost door. These vents are sized to produce an airlock pressure lower than the overpressure of the protective area.

- In the recirculating mode, a return duct connects the filter unit to the airlock at a point near the outermost door. The recirculating mode requires that a relatively small volume of air be vented from the protective area through the airlock for pressurization of the airlock. The level of pressure for the airlock should be 25 to 50 Pa (0.1 to 0.2 in wg) if the protective area is pressurized to 75 Pa (0.3 in wg). At this airlock

pressure, the outer vents of the airlock must be shielded from the wind to prevent backflow through the airlock vents in windy conditions.

C-5 MONITORING

To use an airlock for monitoring chemical agents, a 17.0-mm- (0.7-in-) diameter port for the military standard CAM is placed in the inner door of the airlock or in the middle door of a two-stage airlock. A CAM operator stands in the protective area or in the second stage of a two-stage airlock and places the inlet of the CAM in the port to draw air from the airlock. The operator can also instruct a person in the airlock to stand close to the port to determine whether chemical agent is desorbing from garments that have been exposed to agent vapor outside the airlock.

Use of the CAM for monitoring purposes can ensure that the airlock has purged properly. It can also shorten the airlock dwell time if no contamination is likely to be present outside and the CAM indicates that none is present in the airlock. The CAM detects only G and H agents, so monitoring in the airlock applies only for these agents.

C-6 AIRLOCK CAPACITY

The following are design considerations:

- For a building having a high surge rate of entry and exit, consider multiple airlocks to accommodate the required traffic.

- For dormitories, provide a minimum of two airlocks, with either to be used for ingress or egress.

- If decontamination or showering is necessary, consider providing separate airlocks for male and female personnel.

- To calculate airlock capacity, multiply the required entry and exit rate (people per hour) by the purge period (in minutes) and divide by 60. For example, if an airlock must accommodate 120 entries and exits per hour, and the purge period for three-log reduction is 3 minutes, the airlock must accommodate six people at one time (capacity = 120 x 3/60 = 6 people).

- To calculate the size of an airlock in floor area needed to support an expected entry and exit rate, size the airlock based on a per-person area allocation. Use a space allocation of 2 m^2 (21.5 ft^2) for the first person and 0.5 m^2 (5.4 ft^2) for each additional person, as recommended by UFC 3-340-01. For the example above, the airlock should have a floor area of 4.5 m^2 (48.4 ft^2) to accommodate six people at one time.

C-7 PROCESSING PROCEDURE RECOMMENDATIONS

C-7.1 Doffing Procedure and Dwell Cycle

In most military applications, the outer clothing is removed outdoors immediately before entering the airlock, and the mask is left on. If an airlock is large enough, however, protective garments can be removed in the airlock while it is being continuously purged by the flow of filtered air. Doing so substantially reduces the potential for deposition of agent on the clothing in the interval between removing the outer clothing and entering the airlock. In the case of chemical agents, a thorough check with detector paper is necessary before a person enters the airlock to ensure there is no liquid contamination on boots or garments that would be transferred to interior airlock surfaces. Doffing in the airlock also requires a means of removing the doffed clothing from the airlock to the more contaminated area. This can be done by means of a chute or by placing the clothing into a plastic bag for removal by the next person entering as soon as that person opens the outer door. It is recommended that surgical scrubs or other inexpensive clothing be provided as contaminated clothing will be discarded.

After the protective garments are removed, the airlock is purged of vapors during the dwell cycle. After the dwell cycle, personnel enter the protective area.

C-7.2 Ingress In-Processing Procedures

Processing procedures are the responsibility of the local command authority.
Tables C-5 and C-6 list basic and commonly used ingress in-processing procedures for single-stage and two-stage airlocks. If detector paper indicates liquid contamination on outer garments, open-air decontamination may be required before entering the airlock.

Table C-5. Single-Stage Airlock Ingress Processing Procedures

Item	Description
1	Before entering the airlock, ensure that air is being discharged from the purge vents. Perform a thorough check with detector paper to ensure that there is no liquid contamination on boots or garments.
2	Look through the view window to ensure that the airlock is not occupied. If unoccupied, enter the airlock.
3	After entering the airlock, remove any items left from the previous in-processing group. Remove outer garments and put them in the trash bag or clothing chute provided. Keep mask on. Set the timer for a 3-minute dwell time (or as determined by equation C-1).
4	When the dwell time is complete, personnel in the protective area should check the airlock with a CAM to ensure that the contaminants have been sufficiently removed. After the airlock has been checked and no contaminants have been detected, hold your breath, remove your mask, and enter the protective area. Depending on user requirements, either place the mask in a mask bag, seal the bag, and take it into the shelter for use during an emergency or leave the mask in the airlock for the next processing group to remove for decontamination. Proceed to the protective area.

Table C-6. Two-Stage Airlock Ingress Processing Procedures

Item	Description
1	Before entering the first stage of the airlock, ensure that the airlock filter blower unit is operating and the air is being discharged from the purge vents. Perform a thorough check with detector paper to ensure that there is no liquid contamination on boots or garments.
2	Look through the view window to ensure that the first stage of the airlock is not occupied. If unoccupied, enter the first stage.
3	After entering the first stage of the airlock, remove any items left from the previous in-processing group. Set the timer to 4 minutes (or as determined by equation C-1). During the dwell time, remove outer garments and put them in the trash bag or clothing chute provided.
4	When the dwell time is complete, wait until personnel in the second stage of the airlock have checked the first stage with a CAM to ensure that the contaminants have been sufficiently removed. If no contaminants have been detected, proceed to the second stage. If contaminants have been detected, reset the time to 4 minutes (or as determined by equation C-1).
5	After entering the second stage, set the timer for a 4-minute dwell time (or as determined by equation C-1). After this time has elapsed, hold your breath, remove your mask, and enter the protective area. Depending on user requirements, either place the mask in a mask bag, seal the bag, and take it into the shelter for use during an emergency or leave the mask in the airlock for the next processing group to remove for decontamination.

C-7.3 Egress Processing Procedures

Processing procedures are the responsibility of the local command authority. Tables C-7 and C-8 list basic and commonly used egress processing procedures for single-stage and two-stage airlocks.

Table C-7. Single-Stage Airlock Egress Processing Procedures

Item	Description
1	Before entering the airlock, ensure that the airlock filter blower unit is operating or that air is being discharged into the purge vents.
2	Check the purge timer and look through the view window to ensure that the airlock is not occupied. If the timer has expired and the airlock is unoccupied, set the timer for a 3-minute purge time (or as determined by equation C-1) and enter the airlock.
3	After entering the airlock, close door to the protective area; then proceed through the second door to the unprotected area. Dwell time is not required.

Table C-8. Two-Stage Airlock Egress Processing Procedures

Item	Description
1	Before entering the airlock, ensure that the airlock filter blower unit is operating or that air is being discharged into the purge vents.
2	Check the purge timer and look through the view window to ensure that the airlock is not occupied. If the timer has expired and the airlock is unoccupied, set the timer for a 4-minute purge time (or as determined by equation C-1) and enter the first stage.
3	After entering the first stage, close door to the protective area; then proceed into the second stage. Dwell time is not required.
4	After entering the second stage, close door to the first stage; then proceed to the unprotected area. Dwell time is not required.

APPENDIX D

SHELTERING IN PLACE

D-1 LIMITATIONS OF SHELTERING IN PLACE

Sheltering in place, employs barriers between people and airborne hazards. The barriers consist of a building envelope or a portion of a building (safe room) envelope that forms a tight enclosure to protect the occupants from hazards released inside the building or originating outdoors. Sheltering in place normally does not involve substantial filtration or an overpressure and is therefore effective for only limited periods of time. This limitation exists because even a tightly constructed shelter envelope does not prevent the exchange of indoor air with outdoor air or room-to-room transfer within a building. As air is exchanged, even at a small rate, the protection provided diminishes over time. Any personnel entry or exit during a CBR event could contaminate the interior of the building or safe room and spread contamination within the shelter area.

D-2 MAXIMIZING PROTECTION AND THE PROTECTION FACTOR

The protection provided by shelter-in-place measures varies with the following:

- Air exchange rate of the building or safe room. A tighter building or safe room allows for a lower air exchange rate, therefore providing greater protection for a longer duration.

- Duration of exposure. Protection diminishes as the time of exposure increases. Sheltering in place is therefore suitable only for exposures of short duration (a few hours or less).

- Purging and period of occupancy. For an external release, the length of time that occupants remain in the building after the hazardous condition has passed affects the level of protection. Because the building slowly releases contaminants that have entered, at some point during plume passage, the hazardous concentration inside will exceed the concentration outside.

- Natural filtration. Some filtering occurs when the agent is deposited in the building shell or on interior surfaces as air passes into and out of the building. Generally, the more airtight the building, the greater is the effect of natural filtration.

The protection factor of the shelter is the ratio of the contaminant concentrations outside the shelter to concentrations inside the shelter and is dependent on how long the shelter is exposed to a contaminant plume and on the air exchange or infiltration rate. The infiltration rate is influenced by how well the shelter is sealed; pressure differentials exerted on the shelter by wind, stack effect, or other sources; and the ratio of shelter volume to the area of the shelter envelope. Table D-1 shows infiltration rates, expressed as air changes per hour, for very well-sealed, well-sealed, and poorly sealed shelters under various wind conditions. To accurately determine the actual infiltration rate, a tracer gas or pressure test must be performed on the shelter. Figure D-1 shows protection factors after sheltering periods of 1, 2, and 4 hours, depending on the air

exchange rate. The air infiltration rate and protection factor achieved can be estimated using the procedures in Appendix F, Determining the Building Protection Factor.

Table D-1, Air Infiltration Rate in Air Changes per Hour for Various Shelter and Wind Conditions

Wind Condition	Very Well-Sealed Shelter (air changes/hour)	Well-Sealed Shelter (air changes/hour)	Poorly Sealed Shelter (air changes/hour)
No wind 0 km/hr	0	0.05	0.10
Light 13 km/hr (8 mph)	0.05 to 0.10	0.10 to 0.30	0.30 to 0.50
Moderate 24 km/hr (15 mph)	0.12 to 0.18	0.18 to 0.35	0.35 to 1.00
High 48 km/hr (30 mph)	0.25 to 0.40	0.40 to 0.70	0.70 to 1.5

Figure D-1, Infiltration, Expressed as Air Changes per Hour vs. Protection Factor

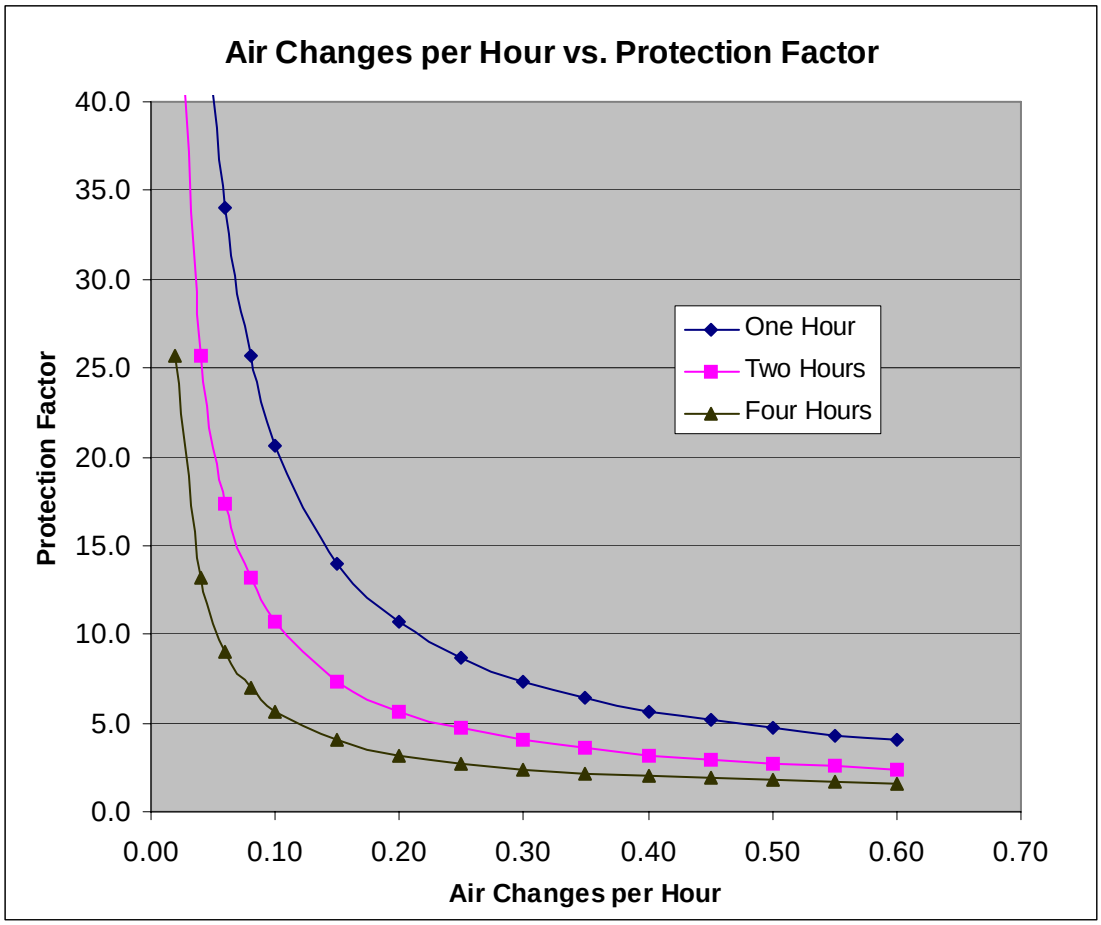

D-3 **SELECTING AND PREPARING A SAFE ROOM**

A single room in a building can be selected as a safe shelter-in-place room if it is readily accessible to all people who are to be sheltered, is more tightly constructed than other rooms in the building, and can be tightly sealed very rapidly. There is no substantial advantage in a room on the higher floors of a low-rise building. A location should not be selected based on height above ground level if it would increase the time it takes people to reach the shelter in an emergency. Although an interior room is preferable, one with windows can be used if the windows seal well when closed. A safe room should have protected access to drinking water, toilets, and a means to communicate with the authorities to determine when it is safe to exit the facility.

Architectural, mechanical, and electrical modifications can be made to prepare a safe room, as well as an entire building, to provide greater and more reliable protection when used for sheltering in place. Generally, these modifications have the following five objectives:

- To seal unintentional openings, thereby reducing the air exchange rate of the protective area envelope.
- To notify building occupants that a CBR release has occurred and provide instructions.
- To facilitate rapid sealing of the protective area envelope and deactivation of fans.
- To allow the possible use of recirculated air-conditioned air while sheltering without reducing the level of protection.
- To add internal (recirculating) filtration.

D-3.1 **Sealing**

Measures for tightening the protective area envelope include sealing all penetrations for pipes, conduit, ducts, and cables using caulk, foam sealants, duct seal, or weather stripping. Typically, most leakage occurs through the top of the protective area envelope, particularly where suspended lay-in ceilings are used without a hard ceiling or without a well-sealed roof-wall juncture above the lay-in ceiling. In such cases, the ceiling should be replaced with gypsum wallboard or the perimeter walls extended upward to meet the roof or the next floor above.

D-3.2 **Notification System**

Provide a mass notification, public address, or alarm system to alert building occupants of a CBR release and provide direction for evacuation or sheltering in place.

D-3.3 **Facilitating Rapid Sheltering**

Particularly in large buildings, building personnel need the capability to rapidly turn off all fans and shut all exterior doors and, if possible, all interior fire doors. Relays or digital control systems can be used to provide easy control of fans. To close all doors quickly in a large building, use a notification system such as a public address system and a protective action plan on which building occupants have been trained.

D-3.4 Allowing Use of Air Conditioning and Heating

Standard air-conditioning and heating systems cannot be operated while sheltering in place because fans either directly or indirectly introduce outside air. If many people are confined in a room or building without air conditioning, heating, or air movement in hot or very cold weather, conditions can become unbearable and cause people to leave the shelter or safe room before authorities determine it is safe to leave the shelter.

To provide an air-conditioning and heating system that can operate safely in sheltering mode, the AHU must serve the safe room exclusively. In addition, both the AHU and the return ducts must be located within the safe room, with the AHU in an interior mechanical closet and the return ducts beneath a hard ceiling. The system must also have a reliable damper system to shut off outside air to the AHU. This normally requires a triple-damper set in which two dampers are in line with a relief damper, which is between the other two dampers and opens when they close. An alternative is to install a split system, which does not introduce outside air in either the normal or protection mode.

D-3.5 Adding Internal Recirculation Filtration

Internal filtration involves the use of indoor air purifiers or indoor air quality units, which are commercially available. These can be ceiling-mounted or wall-mounted; free-standing floor or table units; or components of a heating and cooling system having both a HEPA filter and carbon adsorber. The HEPA filter increases the protection that sheltering provides against aerosols, and the adsorber increases the protection against chemical vapors. Several of the common industrial chemicals are not removed; therefore, filtration is not effective for all chemicals. A maintenance program to replace filters and adsorbers is required to ensure that particulate filters are not clogged and carbon adsorbers are not depleted when needed for sheltering.

D-4 Carbon Dioxide and Oxygen Levels

Increases in carbon dioxide levels and decreases in oxygen are a planning and design concern for sheltering in place with high population densities, 0.93 m^2 (10 ft^2) per person, and tight shelter envelopes for longer durations. Though safe areas are generally for short-duration events and a moderate population concentration, carbon dioxide levels increase, and to a lesser extent, oxygen levels decrease within the safe area. The increase in carbon dioxide levels during extended periods of sheltering in place at reduced outside air intake rates is more of a concern than the depletion of oxygen; the elevated concentrations of carbon dioxide far exceed the necessity to replenish the oxygen levels in the safe area. Carbon dioxide buildup makes people lethargic and sleepy and may not be desired where decisions are needed.

D-4.1 Carbon Dioxide

The shelter designer should consider carbon dioxide levels when determining the shelter size, and take into account the desired sheltering time and number of people that will be in the shelter. The Occupational Safety and Health Administration (OSHA) has set the carbon dioxide permissible exposure limit (PEL) at 5,000 parts per million (ppm) for an 8-hour period and a short term exposure limit (STEL) of 30,000 ppm for a 15-minute period. The National Institute for Occupational Safety and Health (NIOSH) has recommended that carbon dioxide does not exceed 10,000 parts per million (ppm) for up to a 10-hour period and a ceiling concentration of 30,000 ppm not to exceed a 10-

minute period. Since people will be sheltered in-place less than 8-hrs (or 10-hrs), it is recommended that the carbon dioxide level be monitored and displayed on the facility control panel and alarmed at a concentration of 20,000 ppm. At this point the shelter occupants are not in any immediate danger due to the carbon dioxide concentration in the shelter, but should begin to consider the possibility that before long, they may have to evacuate the shelter even though an all clear has not been issued by local officials.

Carbon dioxide levels will increase more slowly in shelters that have some outside air exchange, however for tightly sealed shelters, the effect of outside air exchange is minimal when compared to the effect of population density. Therefore, when designing a shelter it is reasonable to assume no outside air exchange when considering carbon dioxide levels. The carbon dioxide concentration can be calculated for a shelter of any size with no outside air exchange, number of occupants, and sheltering duration using the following formula.

$$C(t) = 15{,}500\ P(t) / V + 330 \qquad \text{(eq. D-1)}$$

Where:

$C(t)$ = carbon dioxide concentration, in ppm, in the shelter at time t

P = the number of people in the shelter (assumed to be standing or doing light desk work)

t = time, in minutes, the occupants have been in the shelter

V = shelter volume in ft^3

Figure D-2 shows a graphical representation of the carbon dioxide level in a shelter with no outside air exchange, a 10 foot ceiling, and population densities of 10, 12, 15 and 20 square feet per person. The shelter with a population density of 10 ft^2 per person reaches a carbon dioxide concentration of 10,000 ppm in 63 minutes and 20,000 ppm in 127 minutes.

Figure D-2. Carbon Dioxide Concentrations in Tightly Sealed Shelters

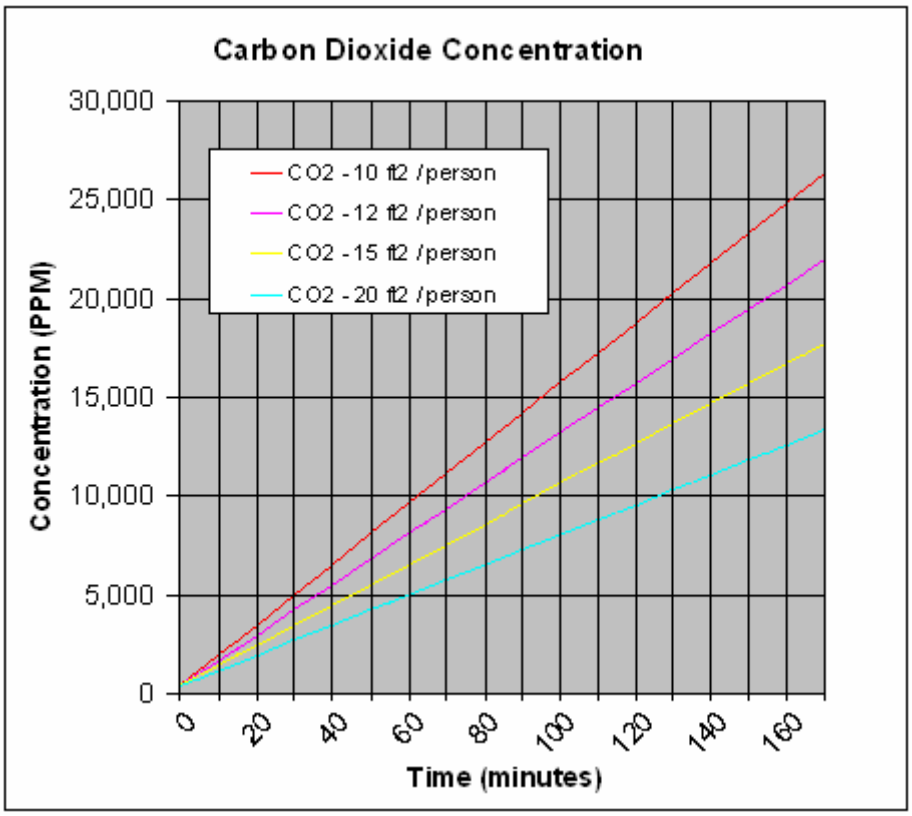

D-4.2 **Oxygen**

Since the increase in carbon dioxide levels during sheltering in place is more of a concern than the depletion of oxygen, the designer should design a shelter to meet carbon dioxide requirements as described in the preceding paragraphs. However, monitoring of the oxygen level is recommended for the peace of mind of the shelter occupants. Even though oxygen depletion is a lesser threat than carbon dioxide, most occupants will not be aware of this and may become overly concerned and anxious about the level of oxygen in the shelter. The minimum oxygen concentration for safe entry into confined spaces in 19.5%, and the oxygen concentration level where impaired judgment and breathing occurs is 16 percent. It is recommended that the oxygen level be monitored and displayed on the facility control panel and alarmed at a concentration of 18 percent. At this point the shelter occupants are not in any danger due to the oxygen depletion in the shelter, but should begin to consider the possibility that they may have to evacuate the shelter even though an all clear has not been issued by local officials.

APPENDIX E

PROTECTIVE ACTION PLAN: OPERATIONAL PROCEDURES TO PROTECT EXISTING BUILDINGS AND THEIR OCCUPANTS FROM AIRBORNE HAZARDS

E-1 INTRODUCTION

This appendix presents a variety of ways to protect existing buildings and their occupants from a short-duration CBR event. The guidance is intended to help building managers, designers, and security planners minimize the potential effects of hazardous materials accidentally or intentionally released.

Protective measures can be as simple as defining a protective action plan that includes security measures and operational procedures to reduce vulnerability, prevent a release, reduce the likelihood that releases will affect building occupants, and mitigate the hazard once a release has occurred. Protective measures include the following:

- Determining the protective capability of a building (refer to Paragraph E-3)
- Identifying protective actions for perceptible hazards (refer to Paragraph E-4)
- Developing building-specific protective action plans (refer to Paragraph E-5)

E-2 PERTINENT FACTS ABOUT AIRBORNE HAZARDS

The basis of a protective action plan is awareness of warning properties, symptoms in other people, and other signs that can initiate protective measures.

E-2.1 Warning Properties

Most industrial chemicals and chemical warfare agents are readily detectable by smell. Soldiers in World War I and World War II were taught to identify by smell such agents as mustard, phosgene, and chlorine. This detection method proved effective for determining when to put on and take off gas masks.

Some agents, however, are imperceptible. The chemical warfare agent sarin is odorless and colorless in its pure form. Carbon monoxide, among the most common imperceptible TICs, causes many deaths in buildings each year because it is odorless and colorless. Biological agents are also imperceptible; there are currently no detection devices that can determine their presence in the air in real time.

E-2.2 Warning Symptoms and Signs

In the absence of a warning property, observations of symptoms or effects in others can alert people to some airborne hazards. This provides a practical means for initiating protective actions because the susceptibility to hazardous materials varies from person to person. The concentrations of airborne materials may also vary substantially within a given building or room, producing a hazard that may be greater to some occupants than to others.

Other warning signs of a hazard involve seeing and hearing something out of the ordinary, such as the hiss of a rapid release from a pressurized cylinder.

E-2.3 Protective Measures

For protection against imperceptible agents, the only practical protective measures are those that are always in place, such as filtering outside air on a continuous basis and using automatic, real-time sensors that are capable of detecting the imperceptible agents.

To define operational protective measures for buildings, releases are divided into two general types:

- *External releases*, which may result from accidents involving industrial storage or transport, fires, or malicious acts. An important consideration is that the source of the hazard is most likely to be at or near ground level. When gases or aerosols are released at ground level, they tend to remain at ground level under neutral or inversion conditions. If they do not remain at ground level, they are diluted as they rise under lapse condition, which occurs typically on sunny days. However, plumes originating at ground level will be diverted upward. In general, a plume will take the shortest path past a building. If the width of a building is more than twice its height, the shortest path will be over the building, and the plume will travel upward to openings on upper floors.

- *Internal releases*, which may occur through the ventilation system or into a building area. The response to an internal release is as follows:

  - Isolate the hazard to a particular building location.

  - Initiate either evacuation of the building or shelter-in-place procedures, as appropriate.

  - If the hazard is a biological agent, maintain shelter-in-place procedures and use expedient sealing measures to contain the agent.

  - After the hazard has passed, initiate an orderly evacuation away from the source.

E-3 PROTECTIVE CAPABILITY OF A BUILDING

E-3.1 Protection by Barriers

A building is a system of barriers that protects the occupants from the environment. The barrier system is incomplete, however, in that it contains openings upon which winds, fans, and natural infiltration act to exchange indoor air with outdoor air. These openings are both intentional, such as windows, doors, vents, and outside air intakes, and unintentional, such as cracks, joints, seams, and pores in construction materials. In general, the protection that a building provides against an external release is determined by these openings, their locations, the forces that drive the exchange of air through them, and the presence of any air filters.

In normal operations, a building does little to protect occupants from airborne hazards outside the building because outdoor air must be continuously introduced through these intentional openings to provide a comfortable, healthy indoor environment. A building can provide substantial protection against agents released outdoors only if the flow of outside air is filtered or temporarily interrupted or reduced. Interrupting the flow of outside air is the principle applied in sheltering in place.

E-3.2 Protection by Mechanical Ventilation

Buildings with mechanical ventilation are designed to introduce outdoor air at a rate of about 7 to 9 L/s (15 to 20 cfm) per person. In normal operations, there is a constant potential for contaminants released outside a building to be transported indoors. In buildings with mechanical ventilation, the outside air predominantly enters through the outside air intakes. A smaller portion enters by infiltration through cracks, seams, joints, and pores in the building shell. To limit very small particulate agents from being distributed through the building by the central ventilation system, only HEPA filters with sealed holding frames are necessary. Less efficient filters and poorly sealed holding frames will filter the air stream to a certain degree. Very small particulate agents, however, will distribute and contaminate the building served by the ventilation system.

Once contaminated air enters a building, the ventilation system can transport it rapidly to various parts of the building. Within each ventilation zone, contaminated air can be drawn through return ducts and distributed through supply ducts at high rates of flow. Contaminated air can also be driven by stack effect via stairwells or elevator shafts, particularly in winter when inside and outside temperatures differ greatly. At ground level, the airflow is inward in winter and outward in summer because of stack effect. Therefore, a building's vulnerability to a ground-level release is greatest in winter. In spring and fall, buildings that use economizer systems typically introduce much greater volumes of outside air. Contaminated air can also be transported between zones of a building by flow through hallways and occupied spaces of a building.

E-3.3 Protection by Natural Ventilation and Infiltration

Buildings that do not have mechanical ventilation meet outside air requirements by natural ventilation (the exchange of the building's internal air with outside air by means of intentional openings in the building envelope, such as open doors and windows) and by infiltration (the uncontrolled exchange of the building's interior air with outside air). Though less tightly constructed than buildings with forced-air ventilation systems, such buildings can be made less vulnerable to external releases by closing windows and doors so that the paths of entry for outside air are smaller and more scattered.

Though tightly sealed, a building does not completely prevent contaminated air from entering; it only minimizes the rate of infiltration. Outside air enters more slowly, but once the external hazard has passed, the building has a higher level of contamination than the outside air, and the internal building air must be purged.

E-3.4 Protection by Natural Filtration

To a very limited degree, a building acts as a natural filter. Natural filtration occurs as a small portion of vapors, gases, and aerosols that enter a building become deposited in the building shell or on interior surfaces as air passes into and out of the building.

E-4 PROTECTIVE ACTIONS FOR PERCEPTIBLE HAZARDS

Once the presence of an airborne hazard is detected, there are four possible protective actions:

- Evacuation
- Sheltering in place
- Ventilation and purging
- Use of protective masks

These actions do not provide protection on a continuous basis, of course, but are implemented singly or in combination for relatively short periods when a hazard is present or known to be imminent. These actions apply only in response to perceptible chemicals, agents detectable by automatic detectors, or events resulting in the release of agents, such as an explosion at a chemical storage facility or a highway accident involving a chemical transport vehicle.

E-4.1 Evacuation

Evacuation and sheltering in place are two protective actions planned for, and employed by, many U.S. communities in the event of an accidental release of toxic chemicals. Evacuation is the most common protective action when an airborne hazard, such as smoke or an unusual odor, is perceived in a building. In most cases, existing plans for fire evacuation apply. Evacuation is the simplest and most reliable action but may not be the best course of action in all situations for an external release, particularly one that is widespread. In cases of non-fire evacuation, actions should be based on the following:

- Is the source of the hazard external or internal? If the hazardous material source is external and an agent has enveloped the building, evacuation is not the safest option. If the hazardous material plume is approaching or surrounding the building so that the building personnel cannot safely exit a building, the use of sheltering in place should be considered. Once the hazardous material has begun to infiltrate the building, however, evacuation and the use of protective masks is appropriate. These are also the appropriate actions if the source is determined to be internal.

- Could evacuation lead to other risks, such as taking the occupants from the physically secure environment of the building into the streets? Evacuation routes may also be hazardous in that they take people through contaminated areas while leaving the building.

E-4.2 Sheltering in Place

Sheltering in place can attain a substantial level of protection. It is appropriate if the hazard is known to originate outside the building and if there is no indication that the hazardous material has begun to enter the building. Although typically used for protection against an external release, sheltering in place may also be used for an internal release. For more information, refer to Appendix D, Sheltering in Place.

E-4.2.1 Advantages and Disadvantages

The advantage of sheltering in place is that it can be implemented more rapidly than evacuation. The protection factor is variable, however, and diminishes over time. In sheltering areas with high population densities, air quality deteriorates while carbon dioxide levels and humidity increase. Also, heating and cooling capability is lost, so temperatures may rise or fall depending on outdoor conditions. In addition, the protection capability is lower than can be provided by high-efficiency filtration of the outside air introduced to overpressurize the building to counteract the wind and building stack effect induced infiltration.

E-4.2.2 Sheltering in Place of the Entire Building

An automated ColPro control system is recommended to de-energize the fans, including AHUs, close isolation dampers and monitor the system status. Indicator lights on the control panel will indicate the status of the fans and the position of all isolation dampers and doors in the protected area perimeter. For buildings with multiple AHUs and fans, an automated ColPro control system is required to simultaneously shutdown the HVAC system and close isolation dampers. In a residential building, actions for sheltering (closing windows and doors and turning off all air conditioners, fans, and combustion heaters) are relatively simple. In an office building, actions for sheltering (turning off all AHUs and closing all dampers) may require more time and planning. Therefore, a protective action plan for an office building should include operational procedures for the following:

- Identifying all AHUs and fans and the switches needed to deactivate them
- Locating shut-off switches so they are easily accessible and relocating them if necessary (but not on the exterior of a building or on the roof)
- Purging the building after an internal release, as follows:
  - Open operable windows and doors.
  - Turn on smoke fans.
  - Turn on the AHUs and fans that were turned off to shelter in place.
  - Open the outside air dampers to the maximum capability of the AHU.

E-4.2.3 Sheltering in Place in a Safe Area

Safe areas, such as one building floor or a safe room, can demonstrate an increased protection capability over sheltering in place of the entire building. It is more complex, however, to shelter in place on one or more floors of a multistory building or a designated safe room after an internal release has occurred on another floor of the building. The use of a separate floor requires the following protective actions:

- Isolate the stairwells by closing fire doors.
- Expediently seal elevators with plastic and tape.

- Do not use the elevators.
- Maintain clear evacuation routes should evacuation be necessary.

The following are important considerations for safe areas:

- Safe rooms for protection against an external release should be located within the building's interior and should be sealed. An internal location greatly reduces the effect of wind conditions and minimizes the internal-to-ambient temperature gradient-induced stack effect and infiltration rate.
- There is the potential of contaminating the safe area during in-processing of personnel, who may be contaminated and may, upon entry, contaminate the safe area.
- Recirculation filtration units that incorporate HEPA filtration and carbon adsorption will greatly increase the safe area protection capability.
- The integrity of the protective area envelope must be maintained during sheltering.
- Comfort cooling can be provided in safe areas as long as the HVAC system is a split evaporator and condenser cooling system.

E-4.2.4 **Carbon Dioxide and Oxygen Levels**

Increases in carbon dioxide levels and decreases in oxygen are a planning consideration for sheltering in place for longer durations, with higher population densities and a tight building envelope. Refer to Paragraph D-4.2 for further information and guidance.

E-4.3 **Ventilation and Purging**

After passage of an external release, an effective method for purging the hazard from the building is to energize the building's ventilation system and, if available, the smoke purge system. This reduces the hazard to which building occupants are exposed. After an internal release, if the hazard is a chemical agent and has been contained, the ventilation system should be energized to 100 percent outside air.

E-4.4 Use of Protective Masks

New models of universal-fit escape masks have been developed for protection against chemical and biological agents. Such masks form a seal at the wearer's neck and therefore fit a wider range of sizes than traditional masks that seal around the face. These masks do not require special fitting techniques or multiple sizes and can be used by people with facial hair. They are designed to store compactly and are practical to store at employees' desks. Employees can also carry them on their belt. These masks have excellent protective capability and have a 5-year shelf life. Escape masks are appropriate for a limited amount of time, approximately 30 to 120 minutes, depending on the model, and perhaps less when the wearer is under duress.

The filters of these masks contain HEPA filtration media and packed carbon beds to remove biological aerosols as well as chemical vapors and gases. Although the carbon adsorbers are designed to filter a broad range of toxic chemicals, they cannot filter all chemicals. An important consideration in planning for the use of escape masks is that their filters are not effective against certain chemicals of high vapor pressure, such as carbon monoxide and carbon dioxide buildup, ammonia, chlorine, and formaldehyde. Contact the appropriate Military Service Safety Office for more information on PPE and selection of proper PPE solutions.

E-5 BUILDING-SPECIFIC PROTECTIVE ACTION PLANS

To ensure that the protective actions will be effective, there must be a protective action plan specific to each building, along with training and familiarization of building occupants. A protective action plan is important in an emergency involving airborne hazards. Such a plan provides the ability to respond rapidly to perceptible hazards of all types and to select the best course of action.

The following presents basic considerations and procedures for the protective actions to be addressed in the plan. The information is organized based on the following four steps in preparing and implementing a protective action plan:

1. Conduct a building survey.
2. Write specific procedures for the following:
   - Hazard determination
   - Decision-making process based on conditions and events
   - Communication of emergency instructions to building occupants
   - Evacuation, sheltering in place, ventilation and purging, and use of protective masks
   - Special situations
3. Designate and train protective action coordinators (PACs).
4. Train building occupants.

E-5.1 Step 1 – Conduct a Building Survey

The purpose of the building survey is to gather information about the building's ventilation system and the characteristics that determine the building's protective capability and vulnerability to an airborne hazard. The building survey is a means of determining what protective actions are practical given the vulnerability to an accidental or intentional release and what hazardous chemicals are stored or used in or near the building.

E-5.1.1 Identify Features Pertinent to Protective Actions

The following outlines how to conduct this portion of the building survey:

- Determine the number of people to be sheltered.
- Determine applicable local codes that may govern or limit the use of safe areas.
- Determine the building's type of ventilation system – all forced-air ventilation duct system with AHUs, combination air-water system using unit ventilators with either split system or through-the-wall units, or natural ventilation.
- If the building has a ventilation system, determine the number of HVAC zones and AHUs, the locations of switches to de-energize the units and close the intake and exhaust dampers, and the locations of the outside air intakes (at ground level or elevated).
- Determine whether the building has smoke purge fans and whether the outside air intakes of the smoke purge fans are at ground level or elevated.
- Determine the locations of the smoke purge fans and identify the control function to energize the fans.
- Determine whether the building has motorized dampers in working condition on outside air exhaust and outside air intakes.
- List all exhaust fans and their locations and identify of the controls for each.
- Determine whether stairwells are protected from smoke.
- Determine whether the building has a public address system. If so, record the locations of the broadcast microphone and controls.
- Identify the methods for building personnel to communicate with building security personnel.

- Obtain a copy of the building evacuation routes posted for a fire emergency.
- Identify possible safe areas.
- For safe rooms, identify locations (generally interior rooms) that are unaffected by wind or temperature gradient-induced stack effects.
- Identify the designated shelter-in-place protective area envelope.
- List shelter-in-place or safe area locations and post the list next to the fire evacuation plans or in a designated location.
- Determine the number of people that can be sheltered in this area.
- Identify procedures necessary to prepare the area as a shelter or safe room.
- De-energize and isolate all ventilation equipment that draws in outside air or exhausts internal air to the exterior.
- Close doors and windows and expediently seal designated exterior building openings.
- Energize any HVAC equipment required for internal cooling and filtering of the safe room.
- Identify procedures for personnel in-processing to the safe room.
- Communicate with emergency personnel to determine the expected sheltering time and potential evacuation routes.

E-5.1.2 **Gather Information on Hazardous Chemicals in the Proximity**

The following outlines how to conduct this portion of the building survey:

- Determine what hazardous chemicals, if any, are stored in the building and their storage locations.
- Determine what hazardous chemicals are used in the building on a regular basis.
- Obtain the material safety data sheets for these chemicals and record the warning properties listed.
- Determine what ventilation systems (such as hoods or glove boxes) are in place to contain or isolate a release of these chemicals at the source.

- Query the local emergency planning commission, fire department, or hazardous materials (HAZMAT) response team about hazardous chemicals that are processed near the building or stored at an off-site location. Compile a list of the chemicals that are potentially hazardous, their approximate distance from and direction in relation to the building, their warning properties, and the prevailing wind direction at the site of the building.

- Determine whether protective masks will remove the potential chemicals.

E-5.1.3 Perform a Vulnerability Assessment

The following outlines how to conduct this portion of the building survey:

- If the building has mechanical ventilation with a duct system, record the location of all outside air intakes and whether they are at ground level and accessible to the public.

- List the locations of mechanical rooms having AHUs and note whether each mechanical room is kept locked and which have outside entrances.

- Determine whether the lobby, mailroom, delivery area, and any public access areas of the building share an AHU with other portions of the building.

- Determine whether the lobby, mailroom, delivery area, and any public access areas of the building are open to the remainder of the building, where an agent release in one of these areas could easily be disbursed into the rest of the building.

E-5.2 Step 2 – Write Procedures

This step outlines important considerations for five sets of procedures to prepare for the building-specific plan.

E-5.2.1 Hazard Determination

This set of procedures lists criteria for the PAC to use in determining if and when a hazard exists and in initiating protective actions. The following indicate that there is an airborne hazard requiring emergency response:

- Sensory indications
  - Strange or pungent odor in the building
  - Irritation of the eyes or throat reported by people in or near the building
  - Smoke or a fog in the building
  - Noises such as the release of gas under pressure in or near the building

- Symptoms
  - People reporting nausea, collapse, choking, or irritation of the eyes or throat
  - Observation of these symptoms in other people in or near the building
- Evidence of malicious acts
  - Finding a spray device (a pressurized cylinder; a container of liquid, gas, or powder; batteries with pump and nozzle) in or near the building
  - Finding a suspicious parcel left unattended in or near the building
  - Receiving a letter or parcel with markings indicating hazardous materials
- Information reported on a hazardous release
  - Notification from authorities that there is an outdoor hazard, such as an accident involving a storage site, tanker truck, or rail car
  - Notification that there is an internal spill of cleaning material or a release of hazardous material stored indoors

E-5.2.2 **Decision-making Process Based on Conditions and Events**

This set of procedures tells how to decide on the best action to take when an airborne hazard exists in the building:

- Quickly <u>determine whether the source of the hazard is inside or outside</u> the building. This is the most important step in deciding on the best protective action.
- <u>If the source of the hazard is clearly inside</u>, such as a spill of cleaning solution or an accidental release of hazardous chemical stored in the building:
  - Evacuate the affected floor(s).
  - Initiate purging of the affected area with the ventilation system and with smoke fans, if available.
  - Consider using protective masks, based on indications of the type of chemical. Note that masks may not provide protection for certain types of chemicals.

- If the source of the hazard is clearly inside, such as an anthrax letter:
  - Consider having the building occupants use protective masks.
  - Evacuate all personnel from the hazardous area.
  - Initiate shelter-in-place procedures, de-energize the ventilation system, and communicate the characteristics of the hazardous agent to the fire department.
  - Isolate the hazardous area with expedient sealing measures and ensure that protective masks are used.
- If the source is clearly outside the building:
  - Initiate sheltering.
  - Communicate with the fire department about the likely duration of the event (that is, the length of time until the release will be contained).
  - If the hazardous material has begun to enter building, use protective masks, if available.
- If the source cannot be determined quickly, take the following actions based on the *most likely* location while continuing to investigate:
  - Evacuate and initiate purging if there are symptoms but no odor or other sensory indications. Evacuate upwind and away from the most likely location of the release.
  - Use protective masks if odor or other signs exist.
  - Determine whether the air is clean outside the building. If so, evacuate.
  - Check for other possible indicators of the source. For example, if there are visible signs outside the building, such as people fleeing or responding to an airborne hazard, the release is likely to be external. In a multistory building, if no signs or symptoms are apparent on adjacent floors, the release is likely to be internal and on one floor.

E-5.2.3 Communication of Emergency Response Instructions to Building Occupants

This set of procedures addresses the preparation of messages and the selection of a warning system for building occupants:

- Prepare a warning message for each protective action in advance of an event.

- Word all messages so they are clear and effective without causing panic and enable the appropriate actions to be taken as rapidly as possible. For example, a possible warning over the intercom is: “Attention, there is an unusual odor on parts of the second floor. If you are on this floor, proceed down the stairs and exit the building into the parking lot.”

- In messages for evacuation, include, as applicable, instructions to avoid certain areas that are known to present a hazard.

- In messages for sheltering in place, include instructions, as applicable, for turning off fans, turning off unit ventilators, and closing all windows and doors (in buildings with natural ventilation).

- Select a warning system based on the following considerations:

  - A public address system serving all parts of the building is the most efficient means of communicating emergency response instructions.

  - An Intranet-type computer system installed on employees’ personal computers is another potential warning system.

  - The telephone is a less efficient and less reliable warning method.

  - A tone-alert or audible alarm system can be used as long as the alarm sounds are easy to differentiate from other alarms employed in the facility.

  - Emergency alarms must be accessible to persons with disabilities, including those with sensory impairments. For building occupants with disabilities, emergency alarm systems may require audible and visual features. Visual strobes serve to notify people who are deaf or hard of hearing that the alarm has sounded. Visual appliances should meet building specifications that address intensity, flash rate, mounting location, and other characteristics. In general, it is not sufficient to install visual signals only at audible alarm locations. Audible alarms installed in corridors and lobbies can be heard in adjacent rooms, but a visual signal can be observed only within the space where it is located.

  - Nonverbal warning systems are more dependent on training and familiarization of all building occupants and are generally less effective than oral instructions.

E-5.2.4 **Evacuation, Sheltering in Place, Ventilation and Purging, and Use of Protective Masks**

This set of procedures addresses the feasibility of evacuation, sheltering in place, ventilation and purging, or use of protective masks based on information gathered in the building survey.

E-5.2.4.1 **Evacuation**

Evacuation is practical for virtually all buildings. The procedure for evacuation should include the following:

- Examine the fire evacuation routes available for the building.
- Identify areas of rescue assistance or areas of refuge spaces that meet required fire-resistance, smoke protection, and ventilation design specifications and where persons unable to use stairs can call for and await evacuation assistance from emergency personnel. Possible areas are as follows:
  - Such areas are often incorporated into the design of fire stair landings but can be provided in other recognized locations.
  - For newly constructed buildings, areas of rescue assistance must include access to two-way communication devices so that users can place a call for evacuation assistance. An exception may be provided for buildings equipped with sprinkler systems that have built-in signals used to monitor the system's features.
  - Horizontal exits, which use fire barriers, separation, and other means to help contain the spread of CBR hazards on a floor, can substitute for areas of rescue assistance provided they meet applicable building codes. Horizontal exits enable occupants to evacuate from one area of a building to another area or building that is on approximately the same level and provides safety from smoke and fire.
- Avoid the following:
  - Evacuation routes through areas where agent releases may have occurred
  - Evacuation routes that pass through the main lobby, as the lobby is publicly accessible and thus a potential location for an agent release
  - The use of elevators in multistory buildings, as elevator movement promotes the exchange of air between and among floors
- When emergency conditions exist, identify evacuation elevators that will remain functional. If present, these elevators may feature, among other things, back-up power supply and pressurization and ventilation systems to prevent CBR hazards and smoke buildup.

E-5.2.4.2 **Sheltering in Place**

Sheltering in place is practical in most buildings. The procedure for sheltering in place should include the following:

- Explain how to terminate sheltering in place by turning on all fans as soon as authorities determine the hazard outdoors has passed.
- List all switches that control AHUs, outside supply air fans, exhaust fans, and unit ventilators or room air conditioners.
- Describe each switch and its location.
- Label each switch “for sheltering in place.”
- If smoke purge fans are available, mark and list the switches controlling these fans for use during sheltering termination.
- If the building is equipped with a fire alarm control system, note that the fire alarm system can be modified with a shelter-in-place mode to de-energize the ventilation system and close outside air intakes.
- If the building ventilation system is so equipped, note that a purge mode can be used to energize the ventilation and smoke purge systems.

E-5.2.4.3 **Ventilation and Purging**

Purging requires that the building have a forced-air ventilation system. The procedure for ventilation and purging should include the following:

- List the switches that control the ventilation and smoke purge fans.
- Describe each switch and its location.
- Label each switch “purge fan control.”
- Use ventilation and purge fans primarily for an internal release.
- Note that purge fans having intakes at ground level should not be used if there is a possibility that the source of the hazard is outside the building.
- Note that purge fans having intakes elevated on a high-rise building may be used even if the source of the hazard is unknown (inside or outside the building).

E-5.2.4.4 **Use of Protective Masks**

The use of protective masks requires that the masks be issued to the people who work or reside in the building. The procedure for using protective masks should include the following:

- If protective masks have been issued, conduct training on how to put on and wear the masks.
- Fit test the masks (if applicable).
- Maintain a record of the manufacture date of each mask to allow the masks to be replaced when their shelf life has expired.
- Institute a maintenance program.
- List situations in which the mask would not provide protection based on the types of chemicals stored or used regularly in the building or in the proximity. If there is uncertainty regarding a specific chemical, state that the manufacturer of the mask should be contacted.
- List the characteristic warning properties of chemicals used and stored in or near the building for which the mask is not effective.

E-5.2.5 **Special Situations**

This set of procedures addresses special situations with respect to sampling agents and handling contaminated mail.

E-5.2.5.1 **Capturing a Sample**

If an emergency involving an airborne hazard occurs in a building, it is beneficial to identify the chemical or aerosol producing the hazard. Items to include in the procedure for capturing a sample are as follows:

- Purpose – Identification of the chemical or aerosol serves three purposes: (1) to know the proper medical treatment to administer if people become ill, (2) to help determine the cause and source of the hazard, and (3) to obtain forensic evidence if the release is a result of a deliberate act.
- Type of sample – Identification of the chemical or aerosol requires capturing an air sample or, in some cases, a liquid sample.
- Assistance with sampling – Assistance is available from the fire department.
- Equipment – Air-sampling equipment is available for capturing aerosols and chemicals.
- Methods – Methods for collecting samples are not included herein (refer to the source cited below for further information).

- Timeliness – Chemicals of high vapor pressure tend to dissipate rapidly, so the samples should be taken as soon as possible without exposing people to the hazards.

- All-clear determination – To ensure that it is safe to return to the building and resume normal operations, air sampling may also be necessary for an all-clear determination.

For more information on sampling, refer to OPNAV 3440.17C, Appendix 8.

E-5.2.5.2 **Handling Mail that May Contain Toxic Substances**

Mail may be received in the mailroom with a note indicating that a toxic substance (such as anthrax spores) is enclosed. To address this situation, the simplest procedure is as follows:

- Although such notes are likely to be a hoax, treat them in a manner that prevents release and spread of the material if the material is indeed hazardous.

- Place a container suitable for hazardous waste in the mailroom and designate it for letters or packages that may contain toxic substances.

- If such a letter is received, place it in the container using care to handle the letter in a manner that will not aerosolize powder or cause release from the letter or package.

- Once the item is contained, handle it as hazardous material.

- Evacuate the area until authorities have given an all clear.

- Provide the item to authorities for testing and forensic evaluation.

E-5.3 **Step 3 – Designate and Train Protective Action Coordinators**

The role of the PAC is similar to that of the building fire marshal. Considerations for designating and training the PACs include the following:

- Note that the PAC has the decision-making responsibility to evacuate, shelter in place, use protective masks, or turn on purge fans. The PAC contacts emergency response personnel when a CBR event occurs.

- Designate a PAC for each duty cycle or shift.

- Train the PACs appropriately to provide a thorough understanding of the protective action plan.

- Ensure accessibility to the PACs by pager, radio, phone, or direct communication at all times.

E-5.4 Step 4 – Train Building Occupants

This step involves training the people who work in the building to follow the procedures for CBR emergencies. The objectives are as follows:

- To develop an awareness of potential airborne hazards. When trained, the people in the building can detect hazards and reduce the response time by being aware of odors, symptoms, and suspicious activities. The training should therefore include familiarization with the following:

  - The warning properties of hazardous chemicals stored or used in or near the building

  - Suspicious activities relating to outside air intakes, mechanical rooms, and abandoned parcels within the building

  - Evacuation procedures

  - Sheltering-in-place procedures

  - Recognizing building alarms and warnings

  - Reporting procedures if suspicious activities or items are observed

- To develop an understanding of the responses and protective actions and how to carry out each of the possible protective actions.

- To inform building occupants about the PACs and how to contact them.

APPENDIX F

DETERMINING THE BUILDING PROTECTION FACTOR

F-1 INTRODUCTION

Buildings can be evaluated to determine their protection factor by using an air pressurization and leakage test. The test results in an infiltration rate in air changes per hour. The air exchange rate of a building can be limited by incorporating common weatherization sealing measures, closing and sealing all windows and doors, de-energizing all ventilation equipment, and sealing off outside air intake and exhaust ductwork with low-leakage dampers.

Shelter-in-place protection involves sealing a building to limit the exchange of internal building air with the external hazardous chemical cloud. Shelter-in-place protection does not incorporate filtration system equipment that overpressurizes the building; instead, it is primarily a measure that provides short-term protection to the building's occupants that exceeds the protection afforded to an unprotected person located in exterior ambient conditions. Shelter-in-place building protection and sealing measures generally range from expedient sealing measures to enhanced shelter-in-place building component improvements. Other considerations such as air conditioning of recirculated air in operational-critical areas or for health reasons should be evaluated.

F-2 BUILDING AIR EXCHANGE

Buildings typically have three different methods of air exchange: (1) by forced mechanical ventilation, (2) by natural ventilation through open windows and doorways, and (3) by infiltration through unintentional openings. An accurate determination of the air exchange rate of a building is necessary to determine the building protection factor.

Calculated air exchange techniques have been developed for estimating the air exchange rate of a building. The rate cannot be reliably determined based solely on building construction and visual inspection. Assumptions in the air leakage area must be made to determine an air exchange rate. Therefore, predicted building air exchange rates by visual inspection alone can differ from the tracer gas measurement rate by as much as 40 to 100 percent or more (2005 *ASHRAE Handbook Fundamentals*, Chapter 27). To lower this uncertainty to approximately 7 to 20 percent (2005 *ASHRAE Handbook Fundamentals*, Chapter 27), the effective leakage area (ELA) of the proposed protective area envelope can be determined by building pressurization and air leakage testing. The pressurization and air leakage test is performed using a blower door assembly, which is an assembly consisting of a fan to provide airflow and pressure, a mounting frame for the fan, a differential pressure gage, and a calibrated device that measures the airflow rate into the facility during pressurization and out of the facility during depressurization. The blower door assembly tests the facility at different pressures, measuring the associated airflow and thereby determining the air leakage characteristics of the protective area envelope.

F-2.1 Forced Ventilation

Forced ventilation is accomplished by two means: (1) the building's mechanical system supplying outside air and exhausting air by the same ventilation system, and (2) the building's exhaust system (such as the bathroom exhaust and kitchen hoods).

F-2.2 Natural Ventilation

Natural ventilation is the exchange of the building's internal air with outside air by means of intentional openings in the building envelope (such as open doors and windows). The driving mechanisms of natural ventilation air exchange are atmospheric temperature and wind conditions.

F-2.3 Infiltration

Infiltration is the uncontrolled exchange of the building's indoor air with outdoor air. This exchange is driven by atmospheric temperature and wind conditions through unintentional openings in the building envelope. These unintentional openings are what define the leakage rate of the building envelope and are the basis for determining the suitability of a building for sheltering in place. During an emergency, the ventilation system of a building modified with enhanced shelter-in-place measures is de-energized. Simultaneously, all outside air intake and exhaust ductwork is sealed with low-leakage isolation dampers, and all exterior doors and windows are closed. This action removes the forced and natural ventilation air exchange mechanisms. Therefore, the remaining building air exchange occurs through the building envelope.

F-3 DETERMINING BUILDING INFILTRATION AIR EXCHANGE

The driving mechanisms of the building air exchange by infiltration are wind pressure and the stack effect. Pressure differences across the building envelope and the envelope ELA determine the air infiltration rate and resulting air exchange rate for a particular building.

F-3.1 Wind Pressure

The pressure developed by wind is positive on the windward side of a building and negative on the leeward side of a building. Pressures on the building's sides parallel to the wind are positive or negative depending on the wind angle and building shape. For this illustration, the wind is assumed to be perpendicularly directed to the windward building face, parallel to the building sides, and perpendicularly directed away from the leeward side. Wind pressure acting on a building's face is defined by equation F-1, below (2005 *ASHRAE Handbook Fundamentals*, Chapter 27, equation 18).

$$P_w = C_1 C_p \rho (\nu^2/2) \qquad \textit{(eq. F-1)}$$

where

P_w = surface pressure, in wg
C_2 = unit conversion factor = 0.0129
C_p = surface pressure coefficient, dimensionless = 0.6 (2005 *ASHRAE Handbook Fundamentals*, Chapter 16)
ρ = air density, lb_m/ft^3
ν = wind speed, mph

F-3.2 **Stack Effect**

The pressure caused by the air temperature difference and resulting air density differences drives air infiltration into the lower portion and exfiltration on the upper portion of the building during cooler outdoor-to-indoor building temperature conditions, as in the winter. During summer or warmer outdoor-to-indoor conditions, the air infiltration and exfiltration airflow is reversed. Pressures due to stack effect are determined by equation F-2, below (2005 *ASHRAE Handbook Fundamentals*, Chapter 27, equation 17).

$$\Delta P_s = C_2 \rho_o [(T_o - T_i)/T_i] g (H_{NPL} - H) \qquad \textit{(eq. F-2)}$$

where

ΔP_s = pressure difference due to stack effect, in wg
C_2 = unit conversion factor = 0.00598
ρ_o = outdoor air density, lb_m/ft^3
T = temperature, ˚R
g = gravitational constant, 32.2 ft/s^2
H_{NPL} = height of neutral pressure level
H = height of observation, ft

subscripts

o = outside
i = inside

F-3.3 **Effective Leakage Area**

The ELA of a protective area is a calculated area that is equivalent to the sum of all openings in the protective area envelope. The ELA can be determined by leakage testing of the proposed protective area envelope and application of the leakage area equations as presented in the 2005 *ASHRAE Handbook Fundamentals*, Chapter 27. The ELA can be determined by use of building pressure data by equation F-3, below (2005 *ASHRAE Handbook Fundamentals,* Chapter 27, equation 33).

$$A_L = C_5 Q_r [(\rho/2\Delta P_r)^{0.5}/C_D] \qquad \textit{(eq. F-3)}$$

where

A_L = ELA, in^2
C_5 = unit conversion factor = 0.186
Q_r = predicted airflow rate at ΔP_r (from curve fit pressurization test data), cfm
ρ = air density, lb_m/ft^3
ΔP_r = reference pressure difference, in wg
C_D = discharge coefficient, generally = 1.0

F-3.4 **Infiltration Building Air Exchange**

To determine the infiltration rate (Q), the wind and stack effect pressures are added together to obtain a resulting pressure acting against the building face. This resulting pressure and the estimated building ELA can be used to calculate the building's infiltration rate by equation F-4, below (2005 *ASHRAE Handbook Fundamentals*, Chapter 27, equation 33).

$$A_L = C_5 Q_r (\rho / 2\Delta P_r)^{0.5} / C_D \qquad \textit{(eq. F-4)}$$

where

A_L = ELA, in^2
C_5 = unit conversion factor = 0.186
Q_r = predicted airflow rate at ΔP_r (infiltration rate), cfm
ΔP_r = pressure difference, in wg
C_D = discharge coefficient, generally = 1.0

Equation F-5, below, (2005 *ASHRAE Handbook Fundamentals*, Chapter 27, equation 35) is used to convert the ELA from one reference pressure at a corresponding airflow rate to another reference pressure.

$$Q_{r,2} = C_6 C_{D,1} A_{r,1} (2/\rho)^{0.5} (\Delta P_{r,1})^{0.5-n} (P_{r,2})^n \qquad \textit{(eq. F-5)}$$

where

$Q_{r,2}$ = airflow rate at reference pressure $\Delta P_{r,2}$, cfm (infiltration rate)
C_6 = unit conversion factor = 5.39
$C_{D,1}$ = discharge coefficient used to calculate $L_{r,1}$, generally = 1.0
$A_{r,1}$ = leakage area at reference pressure, in^2
ρ = air density, lb_m/ft^3
n = flow exponent, dimensionless, generally = 0.65

For this air exchange rate illustration, the above equations are used to determine the air exchange rate of the buildings that are taller than three stories. Equation F-6, below, (2005 *ASHRAE Handbook Fundamentals*, Chapter 27, equation 40) is used to determine the air exchange rate for one- to three-story buildings.

$$Q = A_L (C_s \Delta t + C_w \nu^2)^{0.5} \qquad \textit{(eq. F-6)}$$

where

Q = airflow rate, cfm
A_L = ELA, in^2
C_s = stack coefficient, $cfm^2 \times in^{-4} \times °F^{-1}$
Δt = indoor-outdoor temperature difference, °F
C_w = wind coefficient, $cfm^2 \times in^{-4} \times mph^{-2}$
ν = average wind speed, mph

Estimates of air changes per hour (ACH) are based on knowledge of the building characteristics, including floor area, building height, type of construction, wind speed, and building indoor-to-outdoor ambient temperature differences. The building air exchange rate is then calculated by the amount of air infiltration calculated by the equations above divided by the building volume, as indicated in equation F-7, below (2005 *ASHRAE Handbook Fundamentals*, Chapter 27, equation 2).

$$ACH = 60Q/V \qquad \textit{(eq. F-7)}$$

where

ACH = air changes per hour
Q = building infiltration rate, cfm
V = building volume, ft^3

The building protection factor is then determined by equation F-8, as follows:

$$PF = RT/(RT + e^{-Rt} - e^{R(T-t)}) \qquad \textit{(eq. F-8)}$$

where

PF = protection factor, dose outdoor/dose indoor
R = air exchange rate
T = time of exposure
t = time of occupancy

APPENDIX G

COLPRO FILTRATION SYSTEM EQUIPMENT

G-1 ColPro **FILTRATION SYSTEM DESIGN**

If the ColPro filtration system is located in a contaminated environment (that is, outside the protective area envelope), it must be designed as a blow-through system with the blower located before the ColPro filtration system. If the ColPro filtration system is located in a clean environment (that is, inside the protective area envelope) and draws in the contaminated air through a ductwork system, it must be designed as a draw-through system with the blower located after the ColPro filtration system. The total static pressure of the ColPro filtration system blower must be designed to include the filtration system with dirty filters, ductwork system pressure losses, and the overpressure requirement of the protective area.

G-2 ColPro **FILTRATION SYSTEMS**

The filtration system is the most critical part of the ColPro system. The following discusses filtration equipment that is available from both military and commercial suppliers.

G-2.1 **Military Carbon Adsorbers**

Military carbon adsorbers are typically provided as government-furnished equipment (GFE). Military equipment provided as GFE has the advantage of being pre-approved for use on government installations, while a commercially available carbon adsorber requires additional government quality testing. After initial installation, filter change-out, and periodic testing (typically yearly), all systems require in-place challenge testing as indicated in Appendix H, ColPro Filtration System Testing Requirements.

G-2.1.1 **M98 – Gas-Particulate Filter Set, 94.4 L/s (200 cfm)**

The M98 adsorber is a military-developed and -produced carbon adsorber (gas filter). The filtration equipment, as a set or the separate particulate filter and carbon adsorber, is available as GFE from the U.S. Army Depot (refer to Table G-1 for M98 Gas Filter GFE data). The radial-flow filter set particulate filter conforms to MIL-PRF-51526B, and the carbon adsorber conforms to MIL-PRF-51525B. Figure G-1 indicates the dimensions of the radial-flow particulate filter, and Figure G-2 shows the dimensions of the radial-flow gas filter. The M98 can operate with the filters at the rated flow of 94.4 L/s (200 cfm), which provides proper protection against all military agents and many TICs, or if necessary, the flow can be reduced to 70.8 L/s (150 cfm) to enhance protection against additional TICs. The military provides and manages quality control and testing.

**Table G-1. M98 Gas Filter,
Government-Furnished Equipment Data**

Category	Data
Item manager	Tank Automotive and Armaments Command – Soldier Biological Chemical Attn: AMSTA-LC-CBCS, Rock Island, IL 61299-7390 Phone: (309) 782-4265 or (309) 782-5455
Material developer	Edgewood Chemical Biological Center Attn: AMSSB-REN-P, APG, MD 21010-5424 Phone: (410) 436-5682 or (410) 436-5512
Ordering data, with National Stock Number (NSN)	Gas-Particulate Set, M98[1]: NSN 4240-01-369-6533 Gas-Particulate Set, M98[2]: NSN 4240-01-486-1344 Particulate Filter, 200 cfm: NSN 4240-01-066-3266 Gas Filter, 200 cfm: NSN 4240-01-297-7066
Availability and pricing	Contact item manager for availability and pricing.
Size and weight (Type II)	Particulate Filter: For dimensions, refer to Figure G-1 (7.75 lb). Gas Filter: For dimensions, refer to Figure G-2 (35.5 lb).

[1] Provided with Level A pack for worldwide transport and long-term storage.
[2] Provided with Level B pack for transport within the continental U.S. (CONUS) and 1-year storage.

Figure G-1. Radial-Flow Particulate Filter, 200 cfm

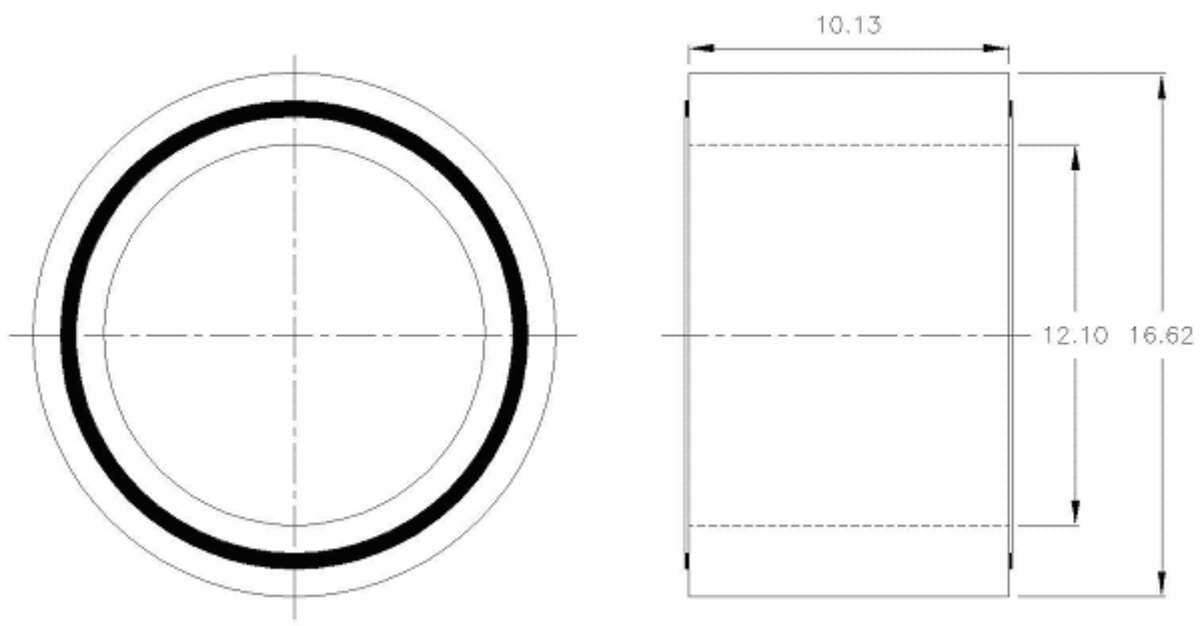

Rated Flow = 94.4 L/s (200 cfm)
Airflow Resistance = 498 Pa (1.0 in wg @ 200 cfm)
HEPA Filter Weight = 3.5 kg (7.75 lb)

Figure G-2. Radial-Flow Gas Filter, 200 cfm

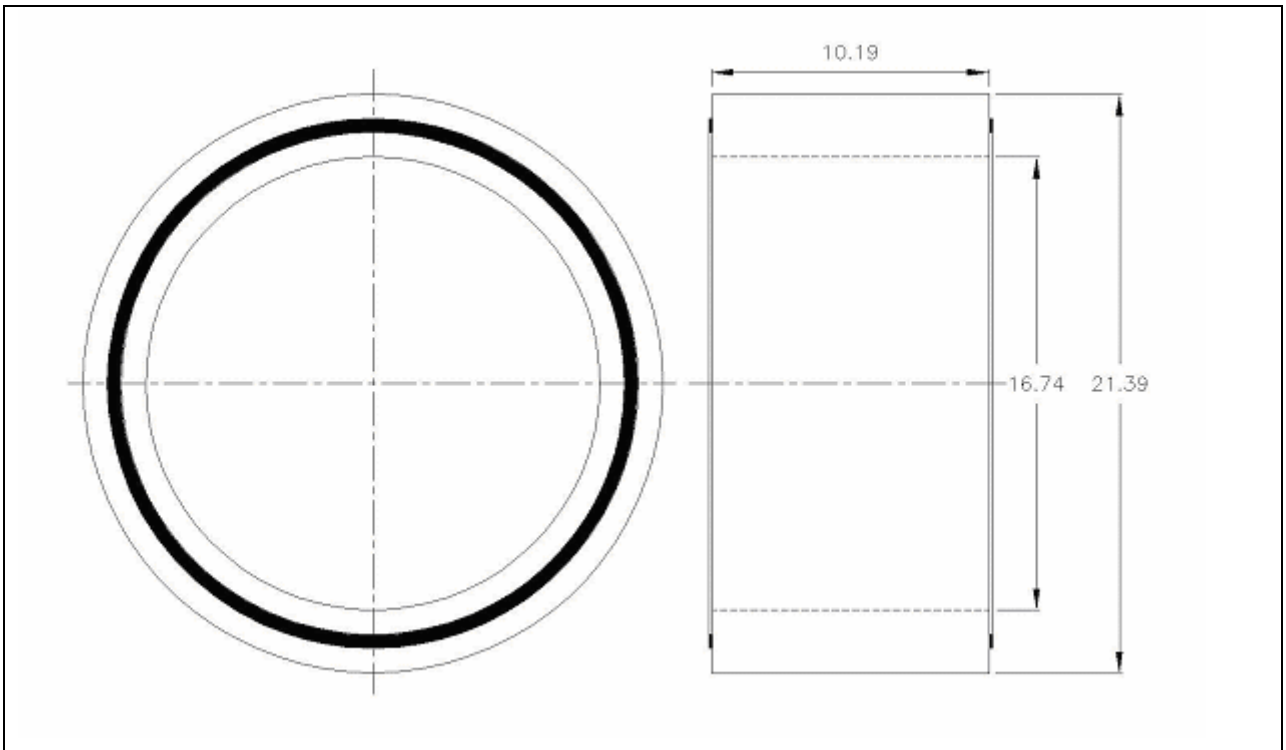

Rated Flow = 94.4 L/s (200 cfm)
Airflow Resistance = 1,120 Pa (4.5 in wg @ 200 cfm)
Gas Filter Weight = 16.1 kg (35.5 lb)

G-2.1.2 **M49 Adsorber**

The M49 adsorber is a military-developed and -produced gas adsorber. Quality control and testing are also provided and managed by the military. The M49 adsorber is of modular design and can be stacked in multiples to achieve a higher airflow rate. It comes in two sizes: 283 L/s (600 cfm) and 566 L/s (1,200 cfm). To procure the M49 adsorber, refer to Table G-2 for GFE data. Unlike commercially available carbon adsorbers, the M49 requires only one stage of filtration for an airflow rate of 566 L/s (1,200 cfm). The pressure drop for the M49 is approximately 375 Pa (1.5 in wg). The M49 carbon trays are refillable by the government. The M49 adsorber, shown in Figures G-3, G-4, G-5, and G-6, requires prefilters, HEPA filters, and test sections or test points similar to those of commercial filtration systems.

Table G-2. M49 Adsorber, Government-Furnished Equipment Data

Category	Data
Item manager	Tank Automotive and Armaments Command – Soldier Biological Chemical Attn: AMSTA-LC-CBCS, Rock Island, IL 61299-7390 Phone: (309) 782-4265 or (309) 782-5455
Material developer	Edgewood Chemical Biological Center Attn: AMSSB-REN-P, APG, MD 21010-5424 Phone: (410) 436-8088 or (410) 436-5512
Ordering data, with NSN	Gas-Filter Tray, 120 cfm: NSN 4240-01-312-9146 Gas-Filter Assembly, 600 cfm: NSN 4240-01-313-0721 Gas-Filter Assembly, 1,200 cfm: NSN 4240-01-312-2940
Availability and pricing	Contact item manager for availability and pricing.
Size (in.) and weight (lb)	Gas Filter Tray: 3.5 x 23.8 x 33.6 in. (55 lb) Gas-Filter Assembly, 600 cfm: 24.0 x 24.2 x 28.2 in. (433 lb) Gas-Filter Assembly, 1,200 cfm: 24.0 x 24.2 x 50.6 in. (780 lb)

Figure G-3. 120-cfm Tray

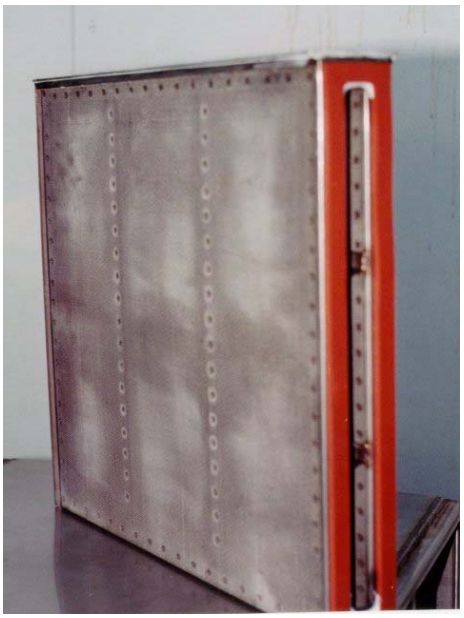

Figure G-4. 600-cfm M49

Figure G-5. M49 with Side Panel Installed

Figure G-6. Two 1,200-cfm M49 Assemblies Installed with HEPA Filters and Prefilters

G-2.2 **Commercial Carbon Adsorbers**

In commercial carbon adsorbers, the adsorber charcoal bed must be designed to adsorb gas with a minimum residence time of 0.25 seconds. For unknown threats and adsorption of volatile agents, ASZM-TEDA carbon conforming to MIL-DTL-32101 must be used. If the threat is known, the use of ASZM-TEDA may not be required, depending on the chemical volatility of the threat. If agents of higher volatility, such as hydrogen cyanide and CK, are not a threat, high-activity carbon (not impregnated carbon) will suffice.

The filter manufacturer must perform lot testing at ECBC as stated in MIL-PRF-32016A, with funding provided by the user. The carbon adsorber shall meet the requirements for airflow resistance, refrigerant leak testing, DMMP breakthrough life testing, moisture content, CK gas life, and gas life capacity testing, as specified in Unified Facilities Guide Specification (UFGS) 23 40 00.00 10. The manufacturer can refill filters not contaminated by chemical surety materials or by super-toxic materials, but the owner must dispose of any contaminated carbon in accordance with local, state, and federal regulations.

G-2.2.1 **V-bed Carbon Adsorbers**

V-bed carbon adsorbers consist of 2-inch-thick panels configured as a V-bed similar to the shape of a Type I cell per Institute of Environmental Sciences and Technology (IEST) RP-CC-008, as shown in Figure G-7. V-bed adsorbers have an airflow rate capacity of 236 L/s (500 cfm) for a cell having a depth of 610 by 610 by 406 mm (24 by 24 by 16 in.) and an airflow rate capacity of 295 L/s (625 cfm) for a cell having a depth of 610 by 610 by 457 mm (24 by 24 by 18 in.), with a residence time of 0.25 seconds and a pressure drop of 625 to 750 Pa (2.5 to 3 in wg). All inner and outer case materials must be Type 304 stainless steel. The adsorber design may include a means to obtain samples of the adsorbent.

Figure G-7. V-bed Carbon Adsorber

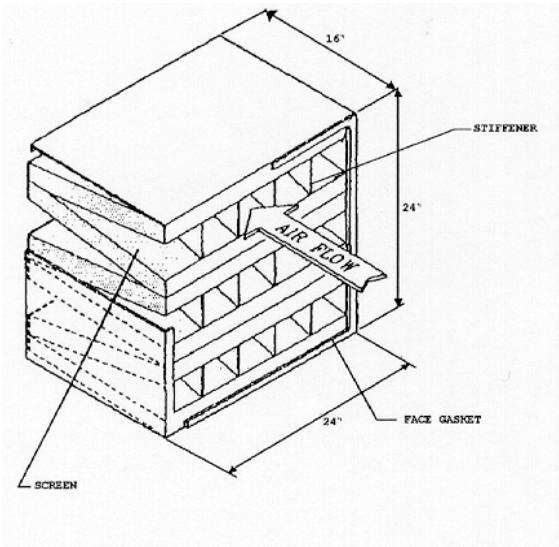

G-2.2.2 **Type II Tray Carbon Adsorbers**

The Type II tray carbon adsorbers, shown in Figure G-8, must meet the requirements of ASME AG-1 and recommended practices of IEST RP-CC-008. Individual trays are 610 mm (24 in.) wide and 160 mm (6.3 in.) high. They are rated for an airflow rate of 157 L/s (333 cfm), with a residence time of 0.25 seconds and a pressure drop of 870 Pa (3.5 in wg). All inner and outer case materials must be Type 304 stainless steel. The adsorber design may include a means to obtain samples of the adsorbent.

Figure G-8. Type II Tray Carbon Adsorber

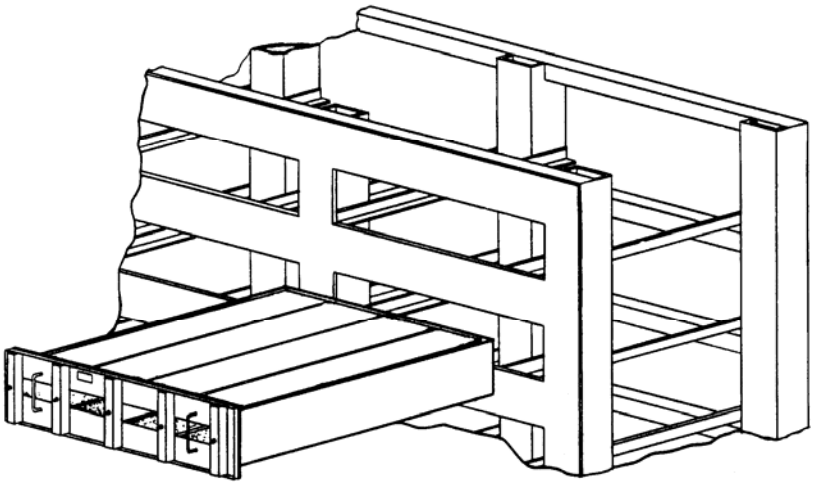

G-2.3 **Roughing Filter**

Continuously operated ColPro filtration systems must have a roughing filter with a minimum efficiency reporting value (MERV) 8 when tested in accordance with ASHRAE Standard 52.2. The roughing filter extends the life of the intermediate filter or prefilter and reduces its change frequency.

G-2.4 Prefilter

The prefilter or intermediate filter must have a recommended minimum MERV 13 when tested in accordance with ASHRAE Standard 52.2. The prefilter extends the life of the HEPA filter and reduces its change frequency. Where MERV 15 postfilters are used, it is recommended that the prefilters also be MERV 15.

G-2.5 HEPA Filter

The HEPA filter frame and filter media must meet the construction, material, testing, qualification, and documentation requirements of ASME N509 and Underwriters Laboratories Inc. (UL) 586. ASME N509 and UL 586 do not include radial filters in the list of standard sizes; however, radial HEPA filters that meet all of the requirements of ASME N509 and UL 586 are acceptable. HEPA filters must have at least a 99.97 percent particle capture efficiency when challenged, at the rated airflow, by aerosol particles having a mean particle diameter of 0.3 microns (MERV 17). The filter media must meet the requirements of ASME AG-1.

G-2.6 Postfilter

The postfilter must have a recommended minimum MERV 15 when tested in accordance with ASHRAE Standard 52.2. The postfilter collects carbon that has been released from the carbon adsorbers and prevents it from being distributed by the HVAC system. Postfilters should be used with non-military carbon adsorbers and in systems where the distribution of carbon dust through the HVAC system is completely unacceptable.

G-2.7 Military Filter Housings

Military filter housings are typically designed and constructed for tactical military ColPro systems to meet equipment-induced shock. In some cases, military filter housings are airdrop certified.

G-2.7.1 Fan Filter Assemblies

Fan filter assemblies (FFAs) are military-developed units consisting of a fan and motor assembly and filter housing, as shown in Figure G-9. FFAs are available in 95 L/s (200 cfm),190 L/s (400 cfm), 285 L/s (600 cfm), 380 L/s (800 cfm), and 475 L/s (1,000 cfm) sizes, with one, two, three, four, or five M98 radial-flow filter sets, respectively. FFAs are available from government manufacturers (refer to Table G-3, below). The 475 L/s (1,000 cfm) FFAs filter housings are available without fans and motors, as shown in Figure G-10. The modular FFAs, with and without fans, can be stacked and nested to create large-capacity ColPro filtration systems.

Figure G-9. Fan Filter Assembly

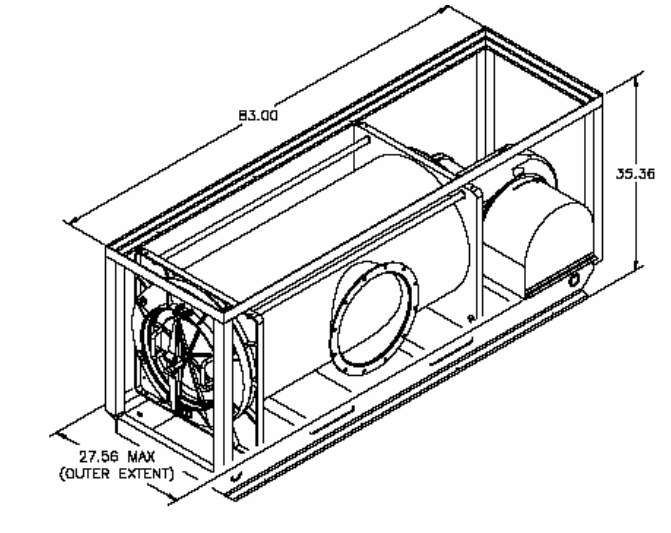

Table G-3. Military Off-the-Shelf Fan Filter Assembly Data

Fan Filter Assembly Number	Airflow	National Stock Number
FFA-200-100	95 L/s (200 cfm)	NSN 4230-01-485-6180
FFA-400-100	190 L/s (400 cfm)	NSN 4230-01-485-6184
FFA-580-100	285 L/s (600 cfm)	NSN 4240-01-101-3611
FFA-800-100	380 L/s (800 cfm)	NSN 4230-01-485-6182
FFA-1000-100	475 L/s (1,000 cfm)	NSN 4230-01-485-6185
FFA-1000-200	475 L/s (1,000 cfm)	NSN 4230-01-485-6183

Figure G-10. Modular Fan Filter Assembly Units (FFA 1000-200s shown)

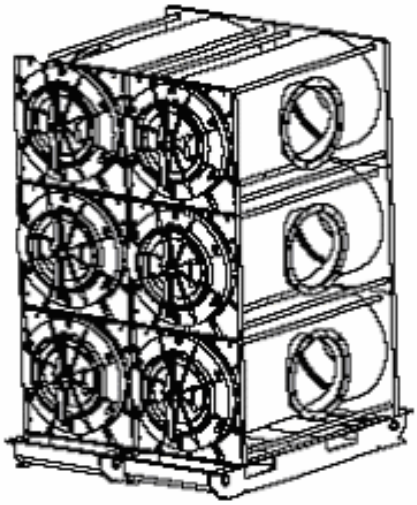

G-2.7.2 **Navy CBR Filtration System**

The Navy CBR filtration system consists of a fan, inlet and exhaust plenums, and Navy standard CBR filter housings (NAVSEA Navy Drawing 6573690) of 600-, 800-, or 1,000-cfm airflow. The number of filter housings can be varied to meet the desired airflow for a project. Each filter housing contains three, four, or five M98 radial-flow HEPA filter and carbon adsorber sets. A Navy CBR filtration system with six 1,000-cfm filter housings in a two-wide by three-high arrangement is shown in Figure G-11. This system can be run with the filters at rated flow (200 cfm each) for a total of 6,000 cfm of airflow, or the airflow can be reduced to 750 cfm per housing to enhance protection against additional TICs. The Navy standard CBR filter housings are designed for use in a shipboard environment and have been tested and certified against shock, vibration, and salt fog corrosion. The housings are of either aluminum or stainless steel construction.

Figure G-11. Navy Standard CBR Filter Housing Assembly (6,000 cfm)

G-2.8 **Commercial Filter Housings**

Commercial ColPro filtration systems are designed to meet applicable nuclear industry standards and quality assurance requirements for nuclear facility applications in ASME AG-1 and N509. The filtration systems must be quality assurance tested in accordance with ASME N510, as described in Appendix H, ColPro Filtration System Testing Requirements. Tests include a housing leak and pressure test, airflow capacity and distribution test, air-aerosol mixing uniformity test, mounting frame pressure leak test, and performance testing of systems.

G-2.8.1 **Multi-Cell Radial-Flow Filtration Unit**

A blow-through, two-wide by two-high multi-cell radial-flow (MCRF) filtration unit is shown in Figure G-12 and diagramed in Figure G-13. The unit consists of a roughing filter, prefilter, fan, HEPA filter and carbon adsorber sections, and an access plenum. The face velocity through the unit is 1.90 to 2.54 m/s (375 to 500 ft/min), and heating and cooling coils can be easily added to the unit. When conditions are such that condensation may form inside or outside of the unit, the unit should be insulated or installed in a double-wall housing. Commercial HEPA filters are used, and up to 10 M98 radial-flow carbon adsobers can be installed in radial-flow filter tubes in the adsorber section, as shown in Figure G-14. The filter housing must conform to the applicable sections of ASME AG-1 and N509 and must be constructed of Type 304 stainless steel. For large systems, walk-in plenum, face-mounted HEPA filters are used, as illustrated in Figure G-13.

Test sections can be provided with the ColPro filtration system to ease in-place leak testing of the system, to isolate the filter section that fails the leak test, and to provide for future leak testing of the filtration system. To test the HEPA filters, test sections or ports are required for sampling after the HEPA filter. To test the carbon adsorbers, injection and sampling ports are located before and after the filtration system adsorber section. Test ports must be located where good mixing can occur, or the test ports must be located approximately 10 duct diameters before and after the ColPro filtration system.

Figure G-12. Multi-Cell Radial-Flow (MCRF) Filtration Unit

Figure G-13. Multi-Cell Radial-Flow (MCRF) Filtration Unit Diagram

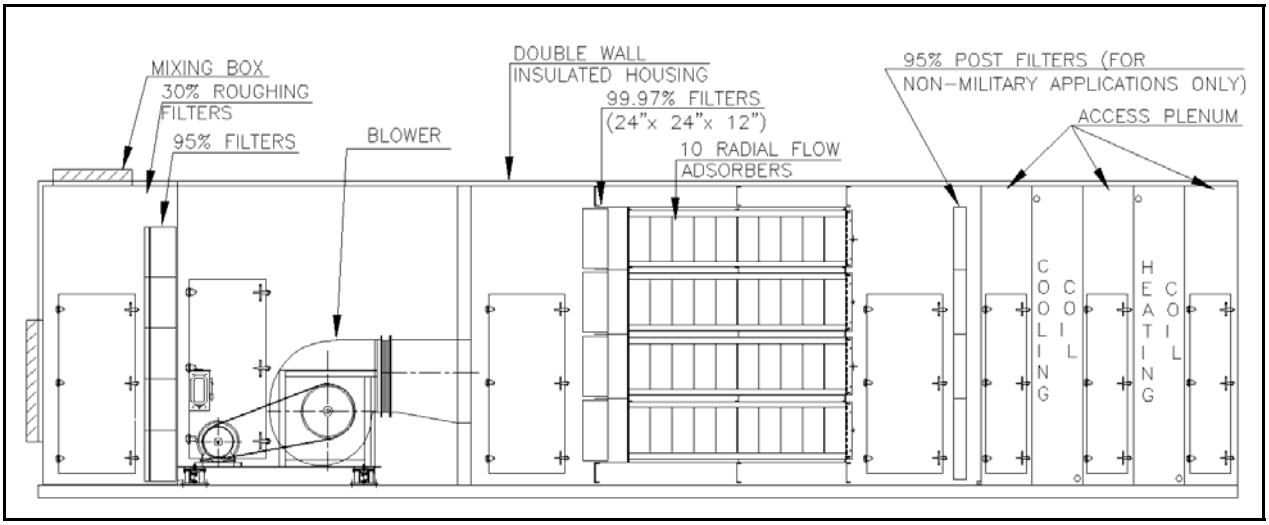

Figure G-14. Radial-Flow Filter Tubes

G-2.8.2 Commercial Nuclear-Grade (ASME AG-1, Type IV, V-bed) Filtration Systems

Commercial V-bed filtration systems are of modular sectional design, and each section can filter 165 to 590 L/s (350 to 1,250 cfm), with two stages of adsorption, as shown in Figure G-15. The ColPro filtration system requires a HEPA filter, either one or two stages of adsorbers, and a 95 percent postfilter to meet ASME AG-1 requirements. Usually, a MERV 8 roughing filter and a MERV 13 prefilter are used upstream of the HEPA filter to collect large dust particles and extend the life of the HEPA filter. The actual type and number of filters required depends on what is to be filtered. Test sections can be provided with the ColPro filtration system to ease in-place leak testing of the system, to isolate the filter section that fails the leak test, and to provide for future leak testing of the filtration system. To test two stages of adsorption, a test section is required between the stages. To test HEPA filters, test sections or ports are required for sampling after the HEPA filter. To test the carbon adsorbers, typically injection and sampling ports located before and after the ColPro filtration system are adequate for testing a single-stage adsorption system. Test ports must be located where good mixing can occur, or the test ports must be located approximately 10 duct diameters before and after the filtration system. UFGS 23 40 00.00 10 can be used to specify housing and filter design requirements.

The filter housing can be of bag-in and bag-out design, conforming to the applicable sections of ASME N509, and must be constructed of Type 304 stainless steel. For applications where contaminants are continuously filtered, bags must be provided for the bag-in and bag-out ports. For applications where contaminants are rarely filtered, bags are not required for the bag-in and bag-out ports.

Figure G-15. V-bed Carbon Adsorber Arrangement

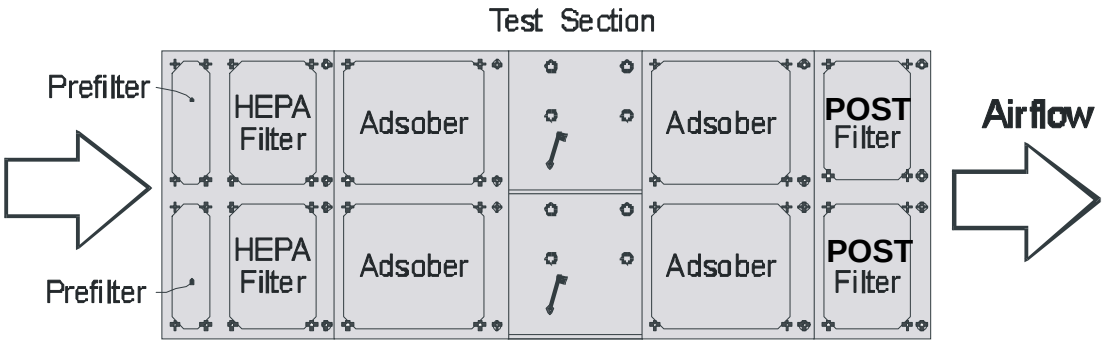

APPENDIX H

COLPRO FILTRATION SYSTEM TESTING REQUIREMENTS

H-1 ACCEPTANCE TESTS

MCRF and commercial filter housings must be tested in accordance with the procedures in ASME N510; FFAs and Navy filter housings do not need to be tested. Tests include a housing leak and pressure test, airflow capacity and distribution test, air-aerosol mixing uniformity test, and mounting frame pressure leak test.

H-1.1 Visual Inspection

Visual inspection must be performed in accordance with ASME N510.

H-1.2 Housing Leak and Pressure Test

The ColPro filtration system housing must be factory leak tested in accordance with ASME N510, Section 6, using the pressure decay method. The maximum housing leakage rate acceptance criteria must be 0.2 percent of the housing volume at 2,480 Pa (10 in wg) pressure differential per hour, in accordance with the Department of Energy (DOE) Nuclear Air Cleaning Handbook (DOE-HDBK-1169-2003). The housing must be tested both positively and negatively to the design pressure of ± 5,000 Pa (± 20 in wg) or to the system design pressure before performing the DOE-HDBK-1169-2003 housing leak acceptance criteria test.

H-1.3 Airflow Capacity and Distribution Test

The airflow across each filtration element bank must be measured to verify that it meets the designed airflow rate under actual field conditions. The test must also verify that the airflow is distributed evenly across each filtration tube (if using the M98 filter set) or filter-mounting frame (if using a commercial HEPA filter and carbon adsorber in series). All tests must be in accordance with ASME N510, which requires the airflow distribution through each filtration bank element to be within ± 20 percent of the average readings taken.

H-1.3.1 Air-Aerosol Mixing Uniformity Test

A challenge gas must be introduced into the air stream upstream of the filtration system to verify that the gas has uniformly mixed before entering the filtration element bank. The test procedure must follow and comply with ASME N510.

H-1.3.2 Mounting Frame Pressure Leak Test

The filtration elements at each housing location must be removed and replaced with a test blank. The filtration element housing and housing seal must be tested in accordance with ASME N510. The air that bypasses the test blank must be measured and recorded as an air leakage rate, repaired, and retested. After testing is completed, the blank must be removed and the filtration elements reinstalled.

H-2 FILTER BANK IN-PLACE TEST

After installation, all ColPro filtration systems must be in-place tested for leaks using a mechanical test method. This test is used to evaluate the overall performance of the filtration system by injecting a challenge agent upstream of the filter bank and measuring the challenge agent concentration upstream and downstream of the filters. The testing must occur in accordance with applicable sections of ASME N510, and an independent testing agency is recommended. The testing agency must be certified in accordance with ASME NQA-1 or an approved equal. The HEPA filtration system housing and HEPA filter aerosol penetration must be less than 0.03 percent for the polydisperse aerosol challenge specified in ASME N510. The carbon adsorber system housing and carbon adsorber must be challenged with decafluoropentane (HFC-4310) or an approved equal, with the downstream concentration not to exceed 0.1 percent of the upstream concentration.