ENGINEERING SERVICE CENTER
Port Hueneme, California 93043-4370

USER'S GUIDE
UG-2072-ENV

DEPARTMENT OF THE NAVY
GUIDANCE TO DOCUMENTING MILESTONES THROUGHOUT THE SITE CLOSEOUT PROCESS

March 2006

Approved for public release; distribution is unlimited.

REPORT DOCUMENTATION PAGE

Form Approved
OMB No. 0704-0811

The public reporting burden for this collection of information is estimated to average 1 hour per response, including the time for reviewing instructions, searching existing data sources, gathering and maintaining the data needed, and completing and reviewing the collection of information. Send comments regarding this burden estimate or any other aspect of this collection of information, including suggestions for reducing the burden to Department of Defense, Washington Headquarters Services, Directorate for Information Operations and Reports (0704-0188), 1215 Jefferson Davis Highway, Suite 1204, Arlington, VA 22202-4302. Respondents should be aware that notwithstanding any other provision of law, no person shall be subject to any penalty for failing to comply with a collection of information, it if does not display a currently valid OMB control number.

PLEASE DO NOT RETURN YOUR FORM TO THE ABOVE ADDRESS.

1. REPORT DATE *(DD-MM-YYYY)*	2. REPORT TYPE	3. DATES COVERED *(From – To)*
March 2006	Final	

4. TITLE AND SUBTITLE

DEPARTMENT OF THE NAVY GUIDANCE TO DOCUMENTING MILESTONES THROUGHOUT THE SITE CLOSEOUT PROCESS

5a. CONTRACT NUMBER

5b. GRANT NUMBER

5c. PROGRAM ELEMENT NUMBER

6. AUTHOR(S)

Karla Harre (NFESC) and Tanwir Chaundry (Intergraph)

5d. PROJECT NUMBER

5e. TASK NUMBER

5f. WORK UNIT NUMBER

7. PERFORMING ORGANIZATION NAME(S) AND ADDRESSES

Commading Officer
Naval Facilities Engineering Service Center
1100 23rd Avenue
Port Hueneme, CA 93042

8. PERFORMING ORGANIZATION REPORT NUMBER

UG-2072-ENV

9. SPONSORING/MONITORING AGENCY NAME(S) AND ADDRESS(ES)

10. SPONSOR/MONITORS ACRONYM(S)

11. SPONSOR/MONITOR'S REPORT NUMBER(S)

12. DISTRIBUTION/AVAILABILITY STATEMENT

Approved for public release; distribution is unlimited.

13. SUPPLEMENTARY NOTES

14. ABSTRACT

The purpose of this guide is to outline a consistent approach for Navy RPMs to follow in recognizing and documenting specific milestones for achieving site closeout. This guide identifies the particular documents that are needed at appropriate stages of the closeout process to record agreements and concurrence of regulators. This guidance addresses closeout documentation requirements for varied regulatory frameworks – the Comprehensive Environmental Response, Compensation, and Liability Act (CERCLA), the Resource Conservation and Recovery Act (RCRA), and the Underground Storage Tanks (UST) Programs. Samples of concurrence letters and Record of Decision (ROD) language are provided in the appendices to assist RPMs in preparing concurrence documentation for their sites.

15. SUBJECT TERMS

Department ot he Navy (DON), environmental, restoration, site closeout, Comprehensive Environmental Response, Compensation, and Liability Act (CERCLA), Remedial Action Completion Report (RACR)

16. SECURITY CLASSIFICATION OF:			17. LIMITATION OF ABSTRACT	18. NUMBER OF PAGES	19a. NAME OF RESPONSIBLE PERSON
a. REPORT	b. ABSTRACT	c. THIS PAGE			19b. TELEPHONE NUMBER *(include area code)*
U	U	U	U	56	

Standard Form 298 (Rev. 8/98)
Prescribed by ANSI Std. Z39.18

ACKNOWLEDGMENT

The Department of the Navy acknowledges the current and past members of the Workgroup on Environmental Restoration Optimization for their contributions in preparing this guidance.

Mark Barnes, NAVFAC Atlantic
Bob Magee, NAVFAC Atlantic
Tanwir Chaudhry, NFESC (Intergraph)
Jeff Dale, NORTHEAST
Karla Harre, NFESC
Richard Mach, NAVFAC HQ
Mike Maughon, SOUTH
Michael Pound, NAVFAC SOUTHWEST
Melinda Trizinsky, NAVFAC SOUTHWEST (Anteon)
Joe Rail, NAVFACWASH
Kelly Dryer, USMC HQ
Said Seddiki, NAVFAC NORTHWEST
Michelle Yoshioka, NAVFAC Pacific

TABLE OF CONTENTS

1.0 INTRODUCTION 1

2.0 BACKGROUND 3

2.1 DON Environmental Restoration Process - Phases and Milestones for CERCLA Sites 3

2.2 EPA Guidance for Closeout Procedures for NPL Sites 6

2.3 RCRA Corrective Action Program 7

3.0 SITE CLOSEOUT DOCUMENTATION 10

3.1 Core Documents for CERCLA Site Closeout 10

3.1.1 Concurrence Letters for Sites Designated NFA from PA/SI 10

3.1.2 ROD Text for Sites Designated NFA from RI/FS or PA/SI 11

3.1.3 Interim Remedial Action Completion Report 12

3.1.4 Remedial Action Completion Report 13

3.1.5 I-RACR and RACR for Selected Remediation Scenarios 16

3.1.6 Final Remedial Action Completion Report 16

3.1.7 NPL Deletion 18

3.1.8 RACR Amendment for LTMgt Completion 18

3.2 Site Closeout Documents for RCRA Corrective Action Sites, and UST Sites 19

3.2.1 Site Closeout for RCRA Corrective Action Sites 19

3.2.2 Site Closeout for Underground Storage Tank Sites 20

4.0 RECOMMENDATIONS 21

5.0 REFERENCES 23

APPENDIX A Example concurrence letters for NFA sites from PA/SI ……....A-1

APPENDIX B Example ROD language for NFA sites …….……B-1

APPENDIX C Example concurrence letters for NFA sites from RODs……..……...C-1

LIST OF FIGURES

Figure 1. DON Environmental Restoration Process - Phases and Milestones 6
Figure 2. Documents for Site Closeout Milestones, and DON ER Phases and milestones..... 11
Figure 3. Documenting NFA Sites during PA/SI and RI/FS 12
Figure 4. Example Timeline for Installation-wide I-RACRs, RACRs, and Final RACR 15
Figure 5. RACR Preparation Stage in the ER Process..... 17

LIST OF TABLES

Table 1. Terminology Comparison for RCRA and CERCLA Processes 7
Table 2. Sections for the Streamlined Remedial Action Completion Report, and Suggested Modifications for I-RACR (modified from DoD 2005). 14

LIST OF ACRONYMS

AOC	Area of Concern
BRAC	Base Realignment and Closure
CAP	Corrective Action Plan
CERCLA	Comprehensive Environmental Response, Compensation, and Liability Act
CMI	Corrective Measures Implementation
CMS	Corrective Measures Study
CAP	Corrective Action Plan
COC	Contaminant of Concern
DD	Decision Document
DMG	Defense Management Goal
DoD	Department of Defense
DON	Department of the Navy
EE/CA	Engineering Evaluation/Cost Analysis
EPA	United States Environmental Protection Agency
ER	Environmental Restoration
ER,N	Environmental Restoration Navy
ESD	Explanation of Significant Differences
FCOR	Final Closeout Report
FFA	Federal Facilities Agreement
FS	Feasibility Study
IR	Installation Restoration
IRA	Interim Remedial Action
I-RACR	Interim Remedial Action Completion Report
IROD	Interim Record of Decision
LF	Landfill
LTM	Long Term Monitoring
LTMgt	Long Term Management
LUC	Land Use Control
MNA	Monitored Natural Attenuation
MR	Munitions Response
NAVFAC	Naval Facilities Engineering Command
NFA	No Further Action
NFESC	Naval Facilities Engineering Service Center
NFRAP	No Further Remedial Action Planned
NOID	Notice of Intent to Delete
NPL	National Priorities List
O&M	Operation and Maintenance
OPS	Operating Properly and Successfully
OU	Operable Unit
P&T	Pump and Treat
PA	Preliminary Assessment
PCOR	Preliminary Closeout Report

QA/QC	Quality Assurance / Quality Control
RAB	Restoration Advisory Board
RA-C	Remedial Action Construction
RACR	Remedial Action Completion Report
RA-O	Remedial Action Operation
RAO	Remedial Action Objective
RC	Response Complete
RCRA	Resource Conservation and Recovery Act
RD	Remedial Design
RFA	RCRA Facility Assessment
RFI	RCRA Facility Investigation
RI	Remedial Investigation
RIP	Remedy In Place
ROD	Record of Decision
RPM	Remedial Project Manager
RTC	Response to Comments
SB	Statement of Basis
SC	Site Closeout
SI	Site Inspection
SWMU	Solid Waste Management Unit
SVE	Soil Vapor Extraction
UST	Underground Storage Tanks
UUUE	Unlimited Use Unrestricted Exposure

1.0 INTRODUCTION

The goal of the Department of the Navy (DON) Environmental Restoration (ER) Program is to restore environmental sites to conditions that protect human health and the environment, and support the defense mission. The program is comprised of the Installation Restoration (IR) and Munitions Response (MR) programs, and has progressed significantly in implementing remedies at contaminated sites. There are a growing number of DON sites approaching site closeout and achieving this milestone in an efficient manner is important to the DON. Site Closeout (SC) is a milestone that signifies the DON has completed active management and monitoring at a remediation site, the remedy is protective of human health and the environment, and no additional funds are expected to be expended at the site. This milestone can be achieved at any stage of the remediation process. However, there are some sites that will achieve protectiveness of human health and the environment while never achieving the SC milestone. These are sites where contaminants are left in place, which require funds to ensure the protectiveness of the remedy into the future.

The DON formed the Environmental Restoration Optimization Workgroup to promote optimization in the Navy ER Program with the ultimate goal of achieving efficient, protective, and cost-effective site closeouts. This Workgroup acts as advisors to the Navy ER Managers. The Workgroup has developed guidance documents to optimize remedy selection and design (NAVFAC 2004), remedial action operations (NAVFAC 2001), and monitoring (NAVFAC 2001) at contaminated sites. The Workgroup was tasked by the ER Managers to prepare this guidance document to assist the Navy Remedial Project Managers (RPMs) by developing consistent documentation for the site closeout milestones in the ER process. This guidance document incorporates the streamlined process from the Department of Defense (DoD)/ Environmental Protection Agency (EPA) Joint Guidance (DoD 2005). The focus of the Joint Guidance is to streamline and standardize the reports to document remedial action completion, and deletion of the installation from the National Priorities List (NPL).

Preparing consistent, identifiable, and defensible documents will help to ensure that decisions and milestones in the site closeout process are adhered to even when Navy RPMs, regulators, and other stakeholders change with a project over time. Following the process and developing the proper documentation will help to avoid re-opening environmental restoration sites after they have closed. This guidance document has been prepared in response to this need, with Navy RPMs as the target audience.

The purpose of this guide is to outline a consistent approach for Navy RPMs to follow in recognizing and documenting specific milestones for achieving site closeout. This guide identifies the particular documents that are needed at appropriate stages of the closeout process to record agreements and concurrence of regulators. This guidance addresses closeout documentation requirements for varied regulatory frameworks – the Comprehensive Environmental Response, Compensation, and Liability Act (CERCLA), the Resource Conservation and Recovery Act (RCRA), and the Underground Storage Tanks (UST) Programs.

Samples of concurrence letters and Record of Decision (ROD) language are provided in the appendices to assist RPMs in preparing concurrence documentation for their sites.

2.0 BACKGROUND

This section describes the various phases of the DON environmental restoration process, describes the RCRA corrective action process, and provides a brief discussion about the existing guidance documents on site closeout for environmental restoration sites.

2.1 DON Environmental Restoration Process - Phases and Milestones for CERCLA Sites

The DON ER process starts with identification and investigation of contaminated sites, followed by selection, evaluation, design and implementation of remedial actions to achieve remediation goals. The process also identifies milestones to measure progress. These milestones include documenting the remedy selection decision, completion of remedy construction/implementation, remedy completion, and Site Closeout. Achieving the remedy construction /implementation (Remedy in Place (RIP)) milestone or remedy completion (Response Complete (RC)) milestone is one of the metrics used to measure progress of the DoD ER program. DoD has established Defense Management Goals (DMGs) that are dates by which each site should reach RIP or RC.

The DON ER process is also referred to as the site closeout process and is designed in accordance with the CERCLA requirements. The phases and milestones in this process are shown in Figure 1, and are briefly described below:

- **Preliminary Assessment/Site Inspection (PA/SI) –** The PA phase identifies contaminated sites based primarily on the review of the existing information about hazardous substance disposal practices at an installation. Field data may be collected during the SI phase to determine the nature of any releases and potential threat to any receptors. Sites that do not pose an unacceptable risk to human health and the environment are designated as “no further action” (NFA) sites. The NFA designation can also be referred to as “no further remedial action planned” (NFRAP).

- **Remedial Investigation/Feasibility Study (RI/FS) -** This phase includes a sampling and analysis program that is adequate to determine the nature and extent of contamination, human health and ecological risk assessments, initial screening of remediation alternatives, and detailed evaluation of remediation alternatives. The RI/FS may also identify NFA sites. Following completion of a feasibility study report, the preferred alternative is documented in a Proposed Plan for public comments.
- **Removal Action –** The Removal Action process is used to address the release of a pollutant, which may present an imminent threat to human health and the environment. Removal actions can be taken during any phase of the cleanup process; but are more common during the PA/SI or RI/FS phases. While completion of a removal action may meet the remedial action objectives for a site, the final site closeout documentation must be from the appropriate remedial action phase.

There are three types of removal actions: emergency, time critical, and non-time critical. An Action Memorandum is prepared to document the selection of the removal alternative. For non-time critical actions, an Engineering Evaluation/Cost Analysis (EE/CA) is prepared to evaluate various alternatives for the removal action, prior to the Action Memorandum.

- **Record of Decision (ROD)**- All required remedial actions for an operable unit (OU) are documented in a ROD. The ROD includes a summary of site conditions, selected remedy, cleanup goals, and the rationale for selecting the remedy. An OU may address a single site at an installation (e.g., Site 15), several sites at the same installation, or contaminated media (e.g., groundwater, soil, or sediments). For non-NPL sites, instead of a ROD, a Decision Document (DD) may be prepared with similar scope as a ROD.

- **Remedial Design (RD) -** This phase involves preparing the detailed design of the remedial action selected in the ROD.

- **Remedial Action Construction (RA-C) -** The designed remedial system is constructed on the site during this phase. This phase may also include any construction related to implementation of land use controls.

- **Remedy In Place (RIP) –** This milestone is achieved when the construction of a long-term remedy is complete and the remedy is operating as planned to meet project remedial action objectives (RAOs) in future, or a short-term remedy has been successfully implemented and the final documentation is being prepared. Determination of achieving the RIP milestone is a Navy decision and regulatory concurrence for this milestone is not needed.

- **Remedial Action Operation (RA-O) -** This phase involves operation, maintenance, and monitoring actions for the remediation system and site and may include conducting 5-year reviews prior to achieving RC. The RA-O phase may also include implementation, and management / maintenance of land use controls (LUCs), if these were part of the selected remedial action in the ROD. Periodic monitoring reports are routinely prepared during this phase to document performance of remediation systems. The RA-O phase continues until a remediation system achieves cleanup goals. For sites with monitored natural attenuation (MNA) or other passive remedies, the RA-O phase includes long term monitoring (LTM) until the cleanup goals are met for the site.

- **Response Complete (RC) -** This milestone signifies that the remedial action objectives have been met and the RA-O phase has achieved cleanup goals specified in the ROD or DD. Formal documentation for the RC milestone is essential to ensure recognition of completion of cleanup goals at the site. Details about documenting completion of the remedial action are provided in Section 3. Prior to claiming completion of the RC milestone, regulatory concurrence of this documentation is required.

- **Interim Remedial Action (IRA)** - An IRA is a remedial action undertaken as a component of a larger remedy prior to the selection of the final remedy. The IRA decisions are documented in an Interim Record of Decision (IROD) and are treated as a partial solution to a complex e.g., multi-media contaminant problem or as a remedial action at one site included within a multi-site OU. A summary of these interim actions is included in the final ROD. Because of the interim status, implementing an IRA does not meet the RIP or RC milestones. However, if an interim action becomes the final action through a final ROD, then the remedy can meet the DoD metric for achieving RIP or RC.

- **Long-Term Management (LTMgt)** – Following the RC milestone, this phase may be required to monitor long-term protectiveness of the remedy when the cleanup goals do not allow unrestricted use. Actions during this phase may involve groundwater monitoring, implementation and management of LUCs, and conducting 5-year reviews. Operation of an active or passive remedy is not included in the LTMgt phase. All such operations should be complete prior to meeting the RC milestone and start of the LTMgt phase.

- **Site Closeout** - This milestone signifies that the DON has completed active management and monitoring at a site, the remedy is protective of human health and the environment, no restrictions on future land use are needed for this site, and no additional funds are expected to be expended at the site. As such, SC is an important milestone; but, unlike RIP or RC, it is not a DoD metric for measuring progress of the ER program.

Figure 1 shows the SC milestone at the completion of LTMgt; however, this milestone can occur at any stage of the remediation process, depending upon the remediation requirements. For example, for sites not requiring the LTMgt phase, completion of the SC milestone occurs concurrently with the RC milestone. Sites requiring indefinite LTMgt, may never reach the SC milestone (e.g., capped landfills or sites cleaned to industrial standards).

For the various phases and milestones of the process, and depending on site specific requirements, several documents may need to be prepared to report decisions and progress. The focus of this document is not the routine reports that document the implementation or progress of the remedial process, but to provide DON-specific guidance for documenting the site closeout milestones for ER sites. Section 3 of this guidance provides detailed information on these documents.

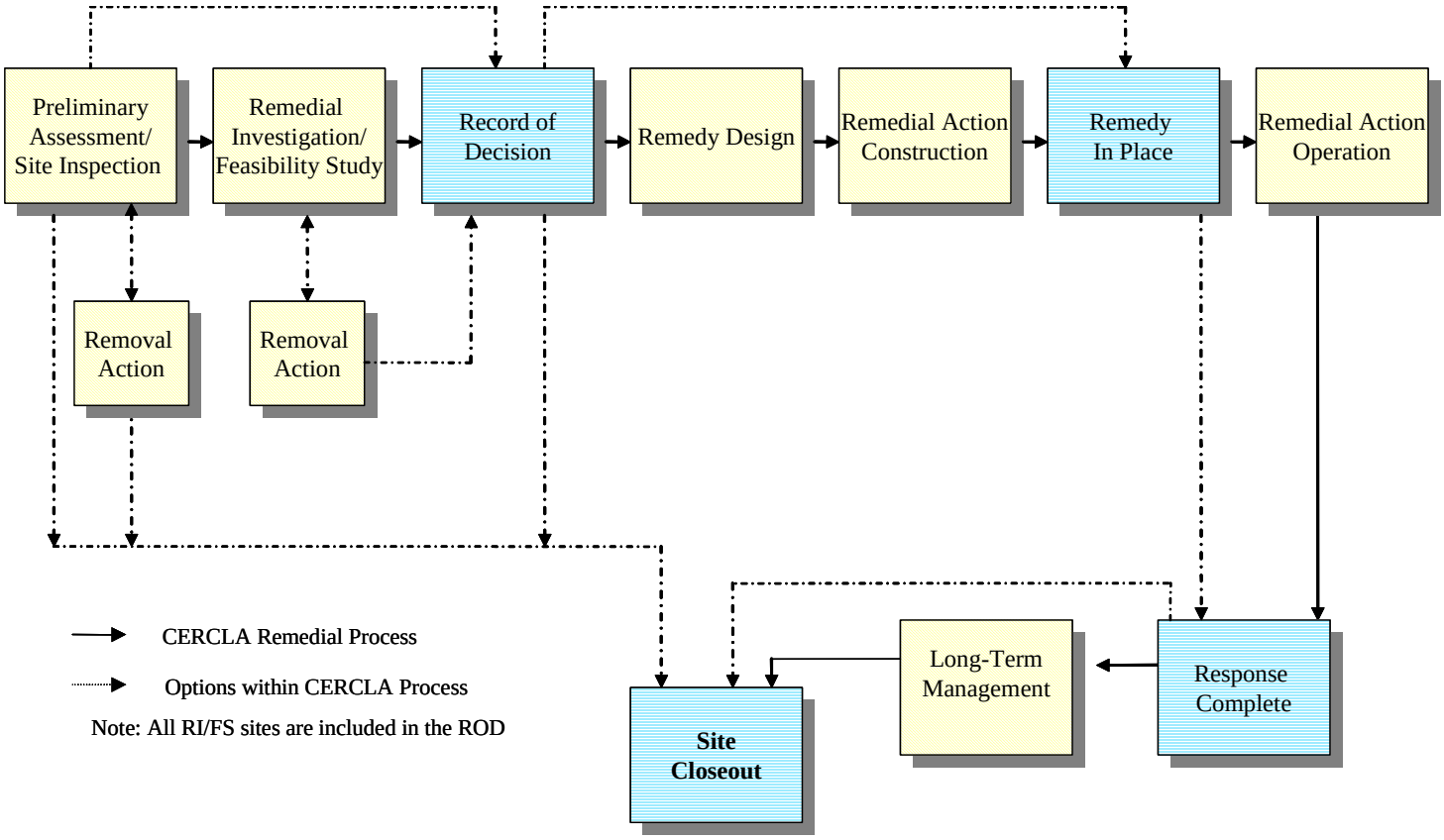

Figure 1. DON Environmental Restoration Process - Phases and Milestones

2.2 EPA Guidance for Closeout Procedures for NPL Sites

The U.S EPA document *Closeout Procedures for National Priorities List Sites* (U.S. EPA, 2000) contains details about the actions EPA RPMs should take at Superfund Lead sites for accomplishing their milestones. It provides detailed information on EPA's program for topics such as remedial action completion, construction completion, site completion, and full or partial site deletion from the NPL. However, some of the documents mentioned in this guidance are not required for DON projects. Also, some of the terminology is different from the DON terminology and careful interpretation is essential. Because of these factors and to avoid duplication in reporting, the DoD/EPA Joint Guidance has greatly streamlined the documentation requirements for NPL delisting. Sections 3.1.7 provides details about these requirements. The DON RPMs are to follow this DON Guidance and prepare the necessary documents discussed in Section 3.1.7

2.3 RCRA Corrective Action Program

The RCRA Corrective Action Program addresses hazardous waste contaminated sites through permits and orders issued under the Hazardous and Solid Waste Amendments of 1984. RCRA generally applies to post 1984 and current actions involving solid and hazardous waste management; however, with the 1984 amendments, the regulatory agencies have a greater role for corrective actions at sites impacted by past disposal practices. Several DON installations have remediation projects under RCRA and closeout of these sites will require adherence to RCRA requirements. Also, DON installations conducting CERCLA actions may be subject to the RCRA corrective action program if these installations are involved with treatment, storage and disposal of hazardous waste.

The RCRA Corrective Action Program requires investigations of releases of hazardous wastes and hazardous constituents, and implementation of remedial actions at these sites. This process is similar to the CERCLA processes for site remediation, as both processes require investigation phases, followed by remediation technology selection, remedial action implementation, and site closeout. However, the terminologies are different for the CERCLA and RCRA processes. Table 1 provides a comparison of these terminologies. Note that both the RA-O and LTMgt phases in the DON ER program are conducted during the Corrective Measures Implementation (CMI) phase for RCRA, and RA phase for CERCLA.

Table 1. Terminology Comparison for RCRA and CERCLA Processes

RCRA	CERCLA
RCRA Facility Assessment (RFA)	Preliminary Assessment Site Inspection (PA/SI)
RCRA Facility Investigation (RFI)	Remedial Investigation (RI)
Corrective Measures Study (CMS)	Feasibility Study (FS)
Statement of Basis (SB)/Response to Comments (RTC) and Draft Permit Modification *	Proposed Plan (PP)
RCRA Permit /Permit Modification	Record of Decision (ROD)
Corrective Measures Implementation (CMI)	Remedial Design (RD) Remedial Action (RA)

*Regulatory agencies are responsible for preparing SB/RTC and Permit Modification

The description of milestones in the CERCLA process and the stage where these milestones are achieved, as discussed in Section 2.1, is also relevant for RCRA. Specifically, the determination of achieving the RIP milestone will occur during the CMI phase following remedy completion (for short term remedies) or system construction with a determination that the system is operating as designed (for remedies requiring longer RA-O actions). The RC milestone is

achieved after completion of the CMI phase when all cleanup goals are met and the RCRA permit is modified. The SC milestone is achieved when DON has completed active management and monitoring at a site, the remedy is protective of human health and the environment, no restrictions on future land use are needed, and the RCRA permit is modified.

RCRA/CERCLA Integration

RCRA traditionally applies primarily to active waste management facilities whereas CERCLA was established by Congress to address inactive and abandoned sites. However, the 1984 amendments added provisions to RCRA that enabled inactive solid waste management units to be addressed through a "corrective action" program. However, CERCLA §120 and Executive Order 12580 establish certain unique requirements associated with hazardous waste cleanup of Federal facilities, including the requirements to conduct all Federal cleanups in a manner consistent with CERCLA. Due to the potential overlap between these two regulatory programs, integration and clarification of the implementation procedures should be established early in the cleanup process.

Coordination between CERCLA and RCRA programs is essential to avoid costly and time-consuming duplication of effort. Generally, cleanup under CERCLA or RCRA corrective action will substantially satisfy the requirements of both programs. EPA memorandum *Coordination between RCRA corrective Action and Closure and CERCLA Site Activities* (U.S. EPA, 1996) provides information on issues such as program deferral and decision documents that can combine cleanup responsibilities for concurrent compliance with CERCLA and RCRA. Another EPA memorandum provides general information for improving RCRA/CERCLA coordination at Federal facilities (U.S. EPA, 2005).

In integrating the programs, a primary goal should be to minimize duplication of effort and second-guessing of remedial decisions. To this end, EPA Regions, State, and Federal agencies are encouraged to coordinate early and throughout the response process regarding actions, documentation and public participation. For many installations, the RCRA/CERCLA integration process has been outlined in a Federal Facility Agreement (FFA) or Federal Facility Site Remediation Agreement (FFSRA). Check these documents to determine how RCRA and CERCLA documentation requirements are to be addressed.

The EPA document *Final Guidance on Completion of Corrective Action Activities at RCRA Facilities* (U.S. EPA, 2003) describes two types of completions for corrective actions at RCRA facilities: "Corrective Action Complete without Controls" and "Corrective Action Complete with Controls." This guidance is issued under statutory and regulatory provisions applicable for RCRA corrective actions. Although the terminology in this EPA guidance is different from the DON terminology for site closeout milestones, there are significant similarities in the basic

approach. The following is a summary discussion of the two types of RCRA corrective actions and their significance to the DON ER phases and milestones.

- ***Corrective Action Complete without Controls*** - The EPA recommends this option to indicate: (a) no corrective action was needed or (b) corrective action was successfully implemented to achieve corrective action goals and no further action or controls are necessary to protect human health and the environment. Comparing this option to the DON ER terminology, the item (a) is similar to designating sites as NFA during the PA/SI and RI/FS phases, and item (b) is similar to achieving RC and SC milestones for sites where no LTMgt phase is required.

- ***Corrective Action Complete with Controls*** - This option will be used generally when the remedy has achieved site-specific cleanup objectives; but to ensure the continued protection of human health and the environment, necessary operation, maintenance, and monitoring is performed and any needed land use controls are maintained. Comparing this option to the DON ER terminology, it is similar to achieving the RC milestone followed by LTMgt phase to ensure continued protectiveness of the remedy.

There will also be instances where a facility is closing their RCRA permit in conjunction with the corrective action process. In these instances, there are additional steps that are required to achieve regulatory concurrence for the closure of the RCRA permit. These steps should already be outlined in the RCRA Closure Plan for the facility and they may delay achievement of the RC milestone, but will not affect the RIP milestone. There may also be schedule issues to be considered at BRAC properties to complete this closure process to support property transfer. As these requirements vary from state to state, close and timely coordination with counsel is recommended.

3.0 SITE CLOSEOUT DOCUMENTATION

This section discusses core DON documents for completing the SC milestones. Section 3.1 provides information on the core documents for the CERCLA sites, and Section 3.2 provides information about site closeout documents for RCRA and UST sites.

3.1 Core Documents for CERCLA Site Closeout

The core documents for CERCLA sites are essential for formally acknowledging the achievement of the SC milestone. This section provides a detailed discussion of these documents listed below and identified in Figure 2.

1. Concurrence letters for sites designated NFA from PA/SI
2. ROD text for sites designated NFA from RI/FS or PA/SI
3. Interim Remedial Action Completion Report (I-RACR)
4. Remedial Action Completion Report (RACR)
5. Final RACR
6. RACR Amendment for LTMgt completion

The ROD, I-RACR, RACR and Final RACR are considered "primary documents" at NPL sites per the DoD/EPA Joint Guidance (DoD 2005).

3.1.1 Concurrence Letters for Sites Designated NFA from PA/SI

The PA/SI is an investigation phase and sites are often designated NFA from this phase. This designation is based on the investigations that conclude these sites do not pose an unacceptable risk to human health and the environment. The PA/SI reports discuss these sites and provide rationale for the NFA conclusion. With this designation, these sites also meet the RC (following regulatory concurrence) and SC milestones.

A common approach to formalize the site closeout for NFA sites from the PA/SI phase is a letter of concurrence from the regulators. These letters are not required under the existing guidance or CERCLA, but are highly desirable to document NFA concurrence. Two examples of concurrence letters are provided in Appendix A. Example A-1 shows a concurrence page for several NFA sites signed by the RPM, installation representative, and State and Federal regulators for Marine Corps Base, Quantico, Virginia. Example A-2 shows separate concurrence letters from the Federal and State agencies, for a site at Naval Air Station, Pensacola, FL. All concurrence letters should be included in the Administrative Record. While these examples or some other potential options could be used, some form of written regulatory concurrence is required to achieve the DoD goal of RC.

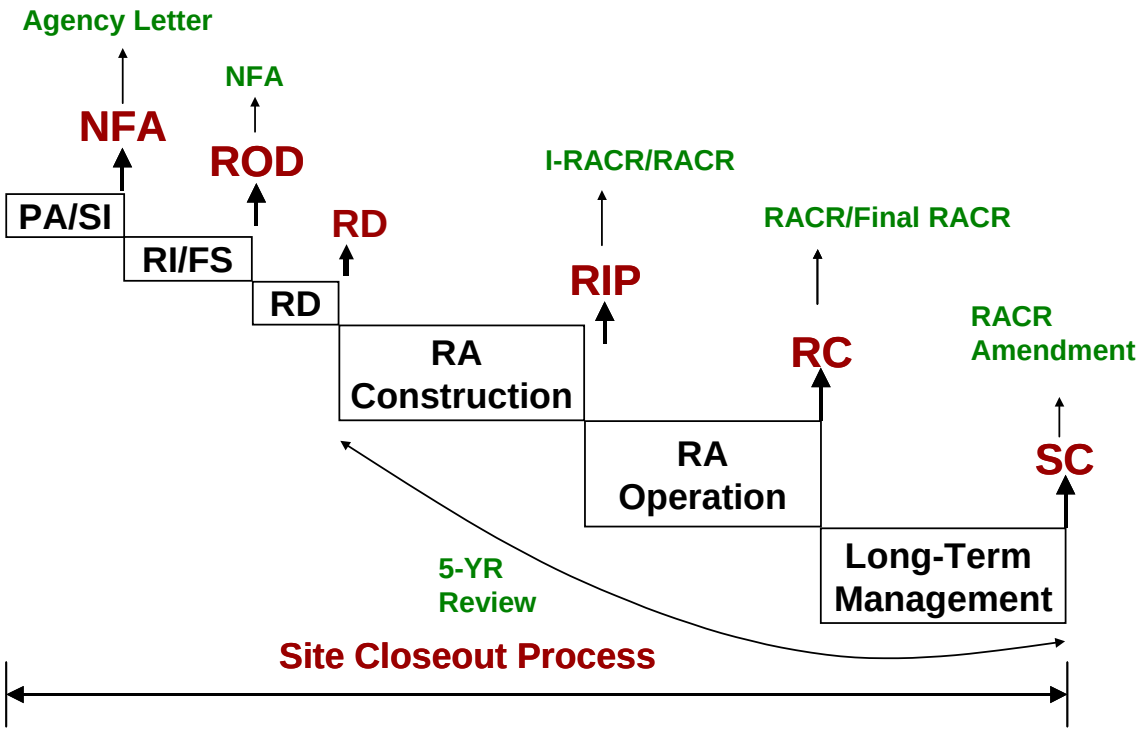

Figure 2. Documents for Site Closeout Milestones, and DON ER Phases and Milestones

3.1.2 ROD Text for Sites Designated NFA from RI/FS or PA/SI

Similar to the PA/SI, the RI/FS phase may also identify sites that do not pose an unacceptable risk to human health and environment, and are designated as NFA sites. These sites are included in the ROD/DD, which is a consensus document indicating agreement from all the stakeholders for the NFA status for these sites. A site in RI can advance directly to a ROD/DD, without an FS for the site, if the conclusions of the RI support NFA.

For a NFA site, the ROD should contain information about the site, current and future land use, site characteristics, and site risks. With a NFA ROD, a site also achieves the RC and SC milestones. Additional information on NFA RODs is available in the U.S. EPA document *Guide to Preparing Superfund Proposed Plans, Records of Decision, and Other Remedy Selection Decision Documents* (U.S. EPA, 1998).

The sites designated NFA from the PA/SI may be included in a ROD for the relevant OU, or in other RODs at the same installation, if acceptable to the stakeholders. Consideration of this approach, shown in Figure 3, is highly recommended as it provides an additional level of concurrence and documentation beyond the concurrence letters from the PA/SI. However, some additional costs will be required to include these sites in a ROD. For some sites (e.g., contentious stakeholders or difficult site conditions), the additional costs may be justified

considering that including these sites in a ROD would provide additional assurance that the site would not easily be reopened because the ROD is a legally binding document. For other sites (e.g., minimal industrial activities, good stakeholder partnering), there may be no justification for the additional expense.

Appendices B and C contain examples of language and concurrence documents related to NFA sites in RODs. Appendix B shows ROD language for a NFA site at Marine Corps Base Camp Pendleton, and Appendix C has examples of letters from regulatory agencies for concurrence on NFA sites from the RODs for Marine Corps Logistics Base Albany, and Naval Air Station Pensacola.

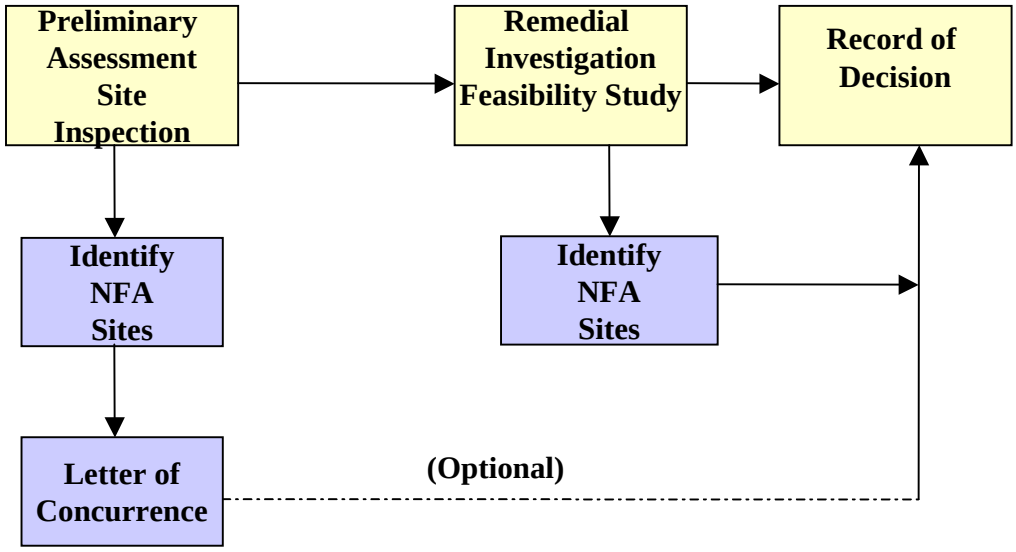

Figure 3. Documenting NFA Sites during PA/SI and RI/FS

3.1.3 Interim Remedial Action Completion Report

For remedies requiring a prolonged RA-O phase for achieving remedial action objectives, the DON RPM is to prepare an I-RACR, following remedy construction and evaluation to confirm remedy operation as designed. Generally, remedial actions involving remediation of groundwater, including MNA, will require long-term operation during the RA-O phase, and an I-RACR should be prepared for these remedies. Claiming the RIP milestone is a DON decision and preparation of an I-RACR is not a pre-requisite for this milestone; but depending on the project schedule, an I-RACR could be used to document completion of this milestone. The I-RACR also could be used for documenting Operating Properly and Successfully (OPS) for

remedies at Base Realignment and Closure (BRAC) or non-BRAC installations where the sites may be available for property transfer or lease. For I-RACR contents, the RPM will need to modify the RACR contents shown in Table 2 (Section 3.1.4).

3.1.4 Remedial Action Completion Report

The Remedial Action Completion Report (RACR) formally documents the achievement of cleanup objectives specified in the ROD/DD, at the completion of the RA-O phase. In addition, as determined by the DoD/EPA Joint Guidance (DoD 2005), it provides the basis for full or partial deletion from the NPL. The deletion process and the role for RACRs are discussed in more detail in Section 3.1.7. The RACR is to contain summary information about the OU, applicable ROD/DD remedy objectives, cleanup activities carried out to achieve remediation objectives, summary information on community relations and restoration advisory boards (RAB), and a certification statement by a DON representative. In addition, the RACR should provide cross-references to other documents that contain detailed relevant information. The suggested contents for a RACR per the DoD/EPA Joint Guidance (DoD 2005) with brief descriptions are shown in Table 2. Per the discussion in the Joint Guidance, the major focus of the Guidance is the streamlined RACR and the use of the RACR for demonstrating remedial action completion and NPL deletion. This DON Guidance follows the process and documentation requirements provided in the Joint Guidance.

The RPM is required to obtain concurrence from regulatory agencies for this report to achieve the RC milestone. Generally, a draft is prepared for EPA/State review and comments, and the final report is issued after addressing these comments. The concurrence could be in the form of a letter and/or a signature page added to the report. Otherwise, the RPM should attempt to obtain regulatory buy-in through providing the RACR for regulator review and comment, and documenting such buy-in through a letter from the regulators. The RACR is a “primary document” and should be maintained in the Site File along with other relevant documents, as a permanent record. The public may be informed by a notice in a local newspaper that the RACR and other documentation to support completion of ROD/DD cleanup objectives are available in the information repository.

Most DON installations have multiple OUs and typically RODs/DDs for these OUs are developed separately due to varying timeframes needed to complete the PA/SI and RI/FS phases. Figure 4 shows an example timeline for the various RODs at an installation. The figure also provides a brief description for the timeline for the various RODs, and shows that various RACRs or I-RACRs may be combined when actions for several OUs are completed concurrently.

Table 2. Sections for the Streamlined Remedial Action Completion Report, and Suggested Modifications for I-RACR (modified from DoD 2005).

Section	Contents
A. Overview	Provide brief description of the OU characteristics, COCs, major findings, and results of site investigations. For the Final RACR, also summarize conclusions from previous I-RACRs and RACRs and identify their file location.
B. Remedial Action Objectives	Identify the remedial action objectives and cleanup standards specified in the ROD/DD and subsequent modifications, if any.
C. Remedial Action	Briefly discuss the remedial actions taken to meet the remedial objectives.
D. Demonstration of Completion	Include information needed to demonstrate attainment of remedial objectives (e.g., final sampling report, visual inspection report). Modify this section for an I-RACR and include information about remedy construction and remedy operation as designed
E. Ongoing Activities	Describe the activities, if any, still being performed or to be performed such as RA-O (this would only be included in an I-RACR) or LTMgt activities such as monitoring, 5-year reviews, LUCs, etc.
F. Community Relations	Briefly summarize the public outreach activities conducted at the site, e.g., the community relations plan; specify the date the RAB was formed and terminated (if applicable); provide the dates of public meetings and discuss environmental justice initiative (if applicable).
G. Certification Statement	Provide a statement by a DON representative authorized to sign the ROD/DD, certifying that the RACR memorializes the completion of the remedial action objectives. For an I-RACR, this certification will be for completion of construction and operation of the remedy in accordance with the ROD/DD.

Various RODs at the Example Installation

- ROD 1, developed in Year 1, is for NFA at OU-1. No I-RACR or RACR is needed for an OU with NFA documented in the ROD.
- ROD 2, developed in Year 2, includes three OUs. For OU-2, the remedy is MNA, which is anticipated to require a lengthy RA-O phase; therefore, an I-RACR is prepared for this OU. For OU 3 the remedy includes LF cap and LUCs, and for OU-4 the remedy is dig and haul. For both of these OUs, completion of the remedial actions is concurrent, and is documented in a single RACR.
- ROD 3, developed in Year 3, includes OU-5 (bioremediation) and OU-6 (soil vapor extraction (SVE)) - both require I-RACRs followed by RACRs at the completion of the RA-O phase. For OU-7 the remedy is LUCs, and a RACR is prepared when LUCs are established and in place.
- ROD 4, developed in Year 4, is for P&T at OU-8 and an I-RACR is prepared when the P&T system starts operation. Future optimization efforts change the remedy to MNA in Year 6, requiring an Explanation of Significant Differences (ESD), a revised I-RACR, followed by a RACR in Year 8.

At this installation, all OUs with the exception of OU-2 have completed RACRs by the end of Year 8. OU-2 is the last OU to reach completion and upon completion of the remedy at this OU, a Final RACR will be prepared for the entire installation. This figure shows the Final RACR and NPL deletion; both of these topics are discussed in Sections 3.1.6 and 3.1.7.

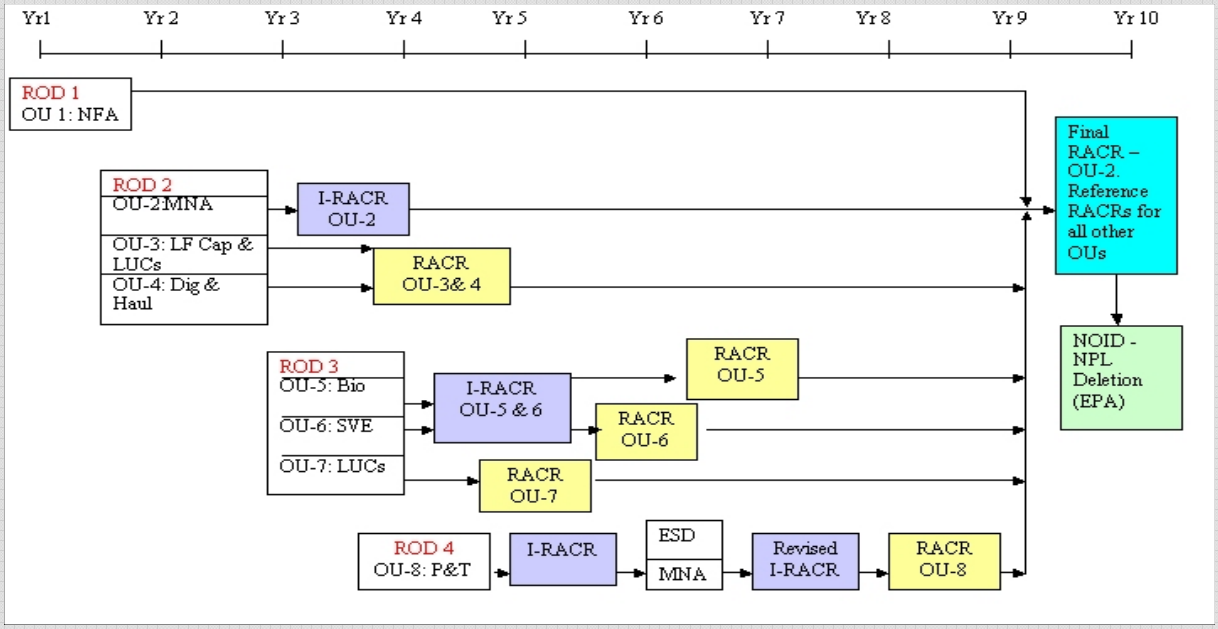

Figure 4. Example Timeline for Installation-wide I-RACRs, RACRs, and Final RACR

3.1.5 I-RACR and RACR for Selected Remediation Scenarios

The phase in the ER process where a RACR is prepared depends upon the remedial strategy at the OU. For example, when a groundwater remedy is able to remove contaminants to unrestricted use (e.g., MCLs), the LTMgt phase will not be needed after RA-O and a RACR will document completion of RC; and the SC milestone will be achieved concurrent with the RC milestone. In contrast, for a containment remedy such as landfill cap (without groundwater remediation), following completion of the cap, a RACR will be prepared to document completion of the cap, but a LTMgt phase will be needed for as long as the cap is needed to contain the waste, possibly in to perpetuity. As a result, this site may never achieve SC.

Figure 5 shows the stages where the RACR and I-RACR are prepared for some typical remediation scenarios. This list of scenarios is not intended to be all-inclusive in terms of remediation strategies, but it should provide a general guideline for the common remedies at ER sites.

3.1.6 Final Remedial Action Completion Report

When all cleanup goals are complete at the last OU at an installation, the RACR for the last OU will be designated the Final RACR (DoD 2005). In Figure 4, the last OU to reach cleanup goals is OU-2. The Final RACR is to contain a brief summary of previous RACRs completed at the installation (in the Overview section of the report), and the specific RACR information for the last OU. The Final RACR will also contain a brief summary of NFA RODs, if any, and will provide references to the locations of previous RODs and RACRs. The RPM may include a table listing all the OUs addressed at the installation and references to site closeout documents (letters, RODs, I-RACRs, RACRs, etc.). The Final RACR will need concurrence from the regulatory agencies, with the review and concurrence process the same as for a RACR as discussed previously.

Selected Remediation Scenarios

A. Remedy requiring the RA-O phase but not the LTMgt phase - Examples: SVE, groundwater remediation to MCLs (by technologies such as air sparging, ZVI, MNA, in situ bioremediation, etc.), and ex situ soil remediation such as a biopile.
B. Remedy not requiring the RA-O or LTMgt phases- Example: soil removal and off-site disposal to meet unrestricted use levels. RIP can be claimed before completion of the RACR.
C. Remedy requiring the RA-O phase to treat groundwater to restricted groundwater use e.g., industrial use, by in situ remedy such as air sparging followed by LTMgt phase with LUCs until groundwater quality improves to unrestricted use levels.
D. Remedy requiring both RA-O phase and LTMgt, but may not achieve SC in foreseeable future. Example - landfill cover sites with groundwater remediation during the RA-O phase, and cover maintenance and other monitoring during the LTMgt phase, which may continue indefinitely without reaching SC. The RACR Amendment report may not be applicable for this scenario and is not shown in the figure.
E. Remedy requiring the LTMgt phase which may continue indefinitely without reaching SC. Examples: landfill cap, LUCs, etc. The RACR Amendment report may not be applicable for this scenario also and is not shown in the figure.

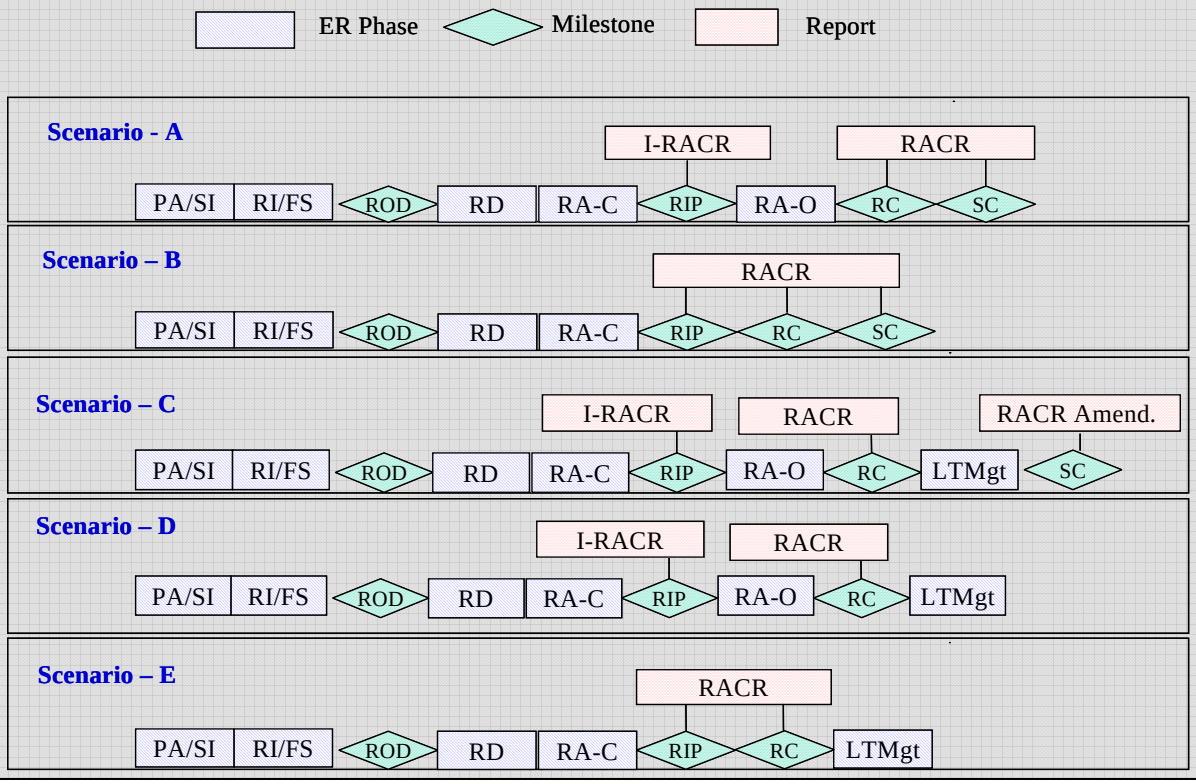

Figure 5. RACR Preparation Stage in the ER Process

3.1.7 NPL Deletion

For installations on the NPL, the Final RACR is the supporting document for deletion of the entire installation, called full deletion, from the NPL. Following completion of the Final RACR by the DON, the EPA is responsible for conducting the deletion process, including any necessary documentation. Specifically, EPA's responsibilities include preparation of the preliminary closeout report (PCOR), the final closeout report (FCOR), completion of a deletion docket, obtaining State concurrence, publishing a notice of intent to delete (NOID) in the Federal Register to inform the public, addressing comments, and preparing and publishing a notice of deletion. The documents prepared by the DON (I-RACR, RACR, and Final RACR) contain all the necessary information for EPA to complete the deletion process.

The deletion could also be for only specific site(s) or parcels, called a partial deletion, at a NPL installation. Partial deletion, generally, is not considered unless it could be beneficial for expediting property lease or transfer for certain parcels at an installation, while remedial actions are underway at the remaining parcels. Again, EPA is responsible for preparing the deletion documents.

Only a limited number of DON installations, to date, have undergone the full or partial deletion process. But, as the DON program advances through the restoration process, deletion from the NPL will become more common. Deletion may be required for termination of some FFAs. LTMgt actions may still be in progress after NPL deletion.

3.1.8 RACR Amendment for LTMgt Completion

The purpose of this report is to document completion of LTMgt actions and achievement of the SC milestone. This report is essentially an amendment of the previously prepared RACR for the OU. Clearly, an OU under LTMgt will not achieve the SC milestone as long as contaminants remain above levels that would not allow unlimited use and unrestricted exposure. There are three general ways that a site under LTMgt can achieve the SC milestone. The first would be that a regulatory standard for a contaminant left in place was raised to a level above concentrations remaining on site. The second would be for a site where the contaminant concentrations naturally attenuated below the unrestricted use concentrations level. And finally, some additional active remediation could be conducted to reduce concentrations below unrestricted levels. In these cases, a RACR Amendment would be produced to document the achievement of the SC milestone.

The basic contents of a RACR Amendment should be similar to a RACR, shown in Table 2. However, additional information should be included about actions taken following completion of the RACR. These actions may include management of LUCs, monitoring, and five-year reviews. This report should have concurrence from the regulatory agencies. The DON is to

inform the public about this document, and a copy along with supporting documents should be available in the information repository and Site File.

3.2 Site Closeout Documents for RCRA Corrective Action Sites, and UST Sites

RCRA corrective action sites and UST sites need documentation and concurrence for achieving site closeout milestones, similar to CERCLA sites. These documents are similar in scope to CERCLA documents; but have some differences due to variations in the regulatory requirements. The following sections describe the site closeout documents for RCRA and UST sites.

3.2.1 Site Closeout for RCRA Corrective Action Sites

Similar to the PA/SI and RI/FS phases for CERCLA, the initial RCRA phases, RFA and RFI, also identify sites that do not pose unacceptable risk to human health and the environment, and thus require no further action. All these NFA sites, from RFA and RFI, are listed in the RCRA permit for the facility as areas of concern (AOCs) or solid waste management units (SWMUs) that do not need further action. Inclusion in the permit as sites requiring NFA formalizes the achievement of the RC and SC milestones for these sites. The permit also includes the AOCs or SWMUs that require corrective action.

Under RCRA, selection of corrective action is conducted in the CMS phase, followed by modification of the permit to design and implement the corrective action during the CMI phase. The RIP milestone will be achieved during this phase following remedy construction and a determination that the remedy is operating as designed, for remedies requiring the RA-O phase; or following completion of remedial actions that do not require the RA-O phase, e.g., dig and haul.

Similar to the CERCLA RA-O phase, the CMI phase is complete when cleanup goals are met; and a corrective action completion report shall be prepared in consultation with the regulatory agencies. This report shall summarize the actions during the CMI phase and present results to document achievement of the cleanup goals as specified in the permit. The RACR contents suggested in Table 2 could be modified as needed for RCRA terminology and other requirements specified by the regulatory agencies to document corrective action completion. The report will need concurrence from the regulatory agencies and may form the basis for modifying the permit. The RC milestone will be achieved following the permit modification. For AOCs / SWMUs that do not need the LTMgt phase, this report will also document the SC milestone. As discussed in Section 2.3, the AOC/SWMU will be designated “corrective action complete without controls” (U.S. EPA, 2003), following a permit modification.

Where the AOC/SWMU requires a LTMgt phase, following completion of the corrective action completion report and permit modification, the AOC/SWMU will be designated “corrective action complete with controls”, and the permit will specify “long term corrective measures

activities" that may include monitoring, LUCs, and reporting (annual, and others). At the completion of the "post closure" period, a completion report similar to the RACR Amendment report discussed in Section 3.1.8 will need to be prepared. However, for containment remedies such as landfill caps, completion of the "long term corrective measures activities" period and SC milestone may not occur in the foreseeable future.

Following completion of the CMI, or LTMgt phases, the RCRA permit needs to be modified. (CERCLA actions do not require an analogous step.) This RCRA permit modification will be generally a Class III modification for completion of the corrective action, and will vary from state to state but will usually require a 60-day public comment period, a public meeting, and other community involvement actions, per 40 CFR 270.42(c). The DON will need to respond to the comments prior to the regulatory agency's approval of the permit modification.

3.2.2 Site Closeout for Underground Storage Tank Sites

Corrective actions under the Underground Storage Tank (UST) program are State lead and the State may delegate the authority to a local agency. A common practice for remediation of a leaking UST site is to prepare and implement a corrective action plan (CAP) for site remediation followed by periodic monitoring reports to evaluate effectiveness of the implemented remedy. The RIP milestone will be achieved following remedy construction and a determination that the remedy is operating as designed, for remedies requiring the RA-O phase; or following completion of remedial actions that do not require the RA-O phase, e.g., dig and haul. Following implementation of a CAP, periodic monitoring reports are prepared to evaluate effectiveness of the implemented remedy. Upon completion of cleanup goals established in the CAP, the final monitoring report is generally the supporting document for a NFA concurrence letter from the regulatory agencies. With this concurrence, the site achieves the RC and SC milestones.

In summary, the documentation requirements for UST sites are simpler than the RCRA or CERCLA requirements. Also, UST actions do not require community involvement at the levels required for RCRA and CERCLA. In some cases, the regulatory agency has the responsibility to inform the public about cleanup decisions at UST sites.

4.0 RECOMMENDATIONS

The following recommendations are made to develop defensible and consistent documents to obtain concurrence and to acknowledge the SC and other milestones in the DON Environmental Restoration process.

- Develop concurrence letters in coordination with regulatory agencies for sites designated as NFA during the PA/SI phase.

- Include in the ROD/DDs sites designated as NFA during the PA/SI based on site-specific conditions. NFA sites from RI/FS are to be included in a ROD/DD per CERCLA requirements.

- Prepare an I-RACR for remedies requiring a prolonged RA-O phase.

- Prepare a RACR when the remediation system achieves cleanup goals specified in the ROD/DD. Regulatory concurrence or buy-in on this report confirms achievement of the RC milestone. For sites not requiring LTMgt, this document also confirms achievement of the SC milestone

- Prepare a Final RACR when the last OU at an installation achieves cleanup goals. In the Final RACR, provide summary/reference for all the previous RACRs and for any NFA ROD(s) for the installation.

- Provide Final RACR to the EPA for delisting from the NPL. EPA is to prepare all the delisting documents and conduct the process.

- Prepare a RACR Amendment for the completion of LTMgt for OUs requiring this phase. Regulatory concurrence for this report confirms completion of all monitoring, reporting, and LUCs for the OU, and achieves the SC milestone. However, for containment remedies such as landfill caps and sites with perpetual LUCs, the LTMgt phase may not be complete in the foreseeable future.

- For RCRA sites, prepare the corrective action completion report (similar to a RACR) with consultation from the lead regulatory agency, for documenting completion of cleanup objectives for the corrective action. For a site not requiring the LTMgt phase, this report will achieve the SC milestone and will be designated “complete without controls” per RCRA terminology. For a site requiring the LTMgt phase, the site will be designated “complete with controls”, per RCRA terminology. Upon completion of the LTMgt phase, prepare an amendment to the completion report.

- Obtain closeout letters from the regulatory agencies for underground storage tank corrective actions, relying mostly on the periodic monitoring reports as supporting documents for these closeout letters.

5.0 REFERENCES

Naval Facilities Engineering Command (2004) Guidance for Optimizing Remedy Evaluation, Selection, and Design – April 2004.

Naval Facilities Engineering Command (2001) RA-O/LTM Optimization Work Group, Guidance for Optimizing Remedial Action Operation, Interim- Final, April 2001. http://enviro.nfesc.navy.mil/erb/erb_a/support/wrk_grp/raoltm/rao_interim_final2.pdf

Naval Facilities Engineering Command (2000) RA-O/LTM Optimization Work Group, Guide to Optimal Groundwater Monitoring, January 2000. http://enviro.nfesc.navy.mil/erb/erb_a/support/wrk_grp/raoltm/case_studies/Int_Final_Guide.pdf

U.S. Department of Defense (2005) DoD/EPA Joint Guidance for Streamlined Site Closeout and NPL Deletion Process for DoD Facilities.

U.S. Environmental Protection Agency Memorandum (1996) - Coordination between RCRA corrective Action, Closure, and CERCLA Site Activities

U.S. Environmental Protection Agency (1998) Guide to preparing Superfund Proposed Plans, Records of Decision, and other Remedy Selection Decision Documents. EPA 540-R-98-031

U.S. Environmental Protection Agency (2000) *Closeout Procedures for National Priorities List Sites.* EPA 540-R-98-016

U.S. Environmental Protection Agency (2003) Final Guidance on Completion of Corrective Actions at RCRA Facilities. Federal Register Vol. 68, No 37

U.S. Environmental Protection Agency Memorandum (2005) – Improving RCRA/CERCLA Coordination at Federal Facilities.

Appendix A

Example concurrence letters for NFA sites from PA/SI

Example 1A- Concurrence documentation from regulatory agencies

10/03/01

DTAWS CLOSE-OUT DOCUMENTATION
MARINE CORPS BASE, QUANTICO, VIRGINIA

This document presents the Desktop Audit with Sampling (DTAWS) Close-Out Documentation for six DTAWS sites at the U.S. Marine Corps Combat Development Command (MCCDC) located in Quantico, Virginia. This document meets the Federal Facilities Agreement (FFA) requirement for final close-out of the specified sites. This document was prepared for the Engineering Field Activity Chesapeake (EFACHES) under the Comprehensive Long-Term Environmental Action Navy (CLEAN), Contract Number N62472-90-D-1298, Contract Task Order (CTO) 0305.

The objective of the DTAWS investigation is to evaluate and document whether former operations at the identified sites have resulted in a release of hazardous substances, pollutants, contaminants, hazardous wastes, or hazardous constituents at concentrations which may be of concern to human health and the environment. The DTAWS process involved obtaining and evaluating all accessible documentation including environmental reports, facility drawings, personnel interviews, aerial photographs, and searching MCCDC Natural Resources and Environmental Affairs (NREA) records. Based on the available documentation, the QPMT determined No Further Action was appropriate for the six DTAWS sites listed below without the necessity for performing a field investigation that typically includes multimedia sampling and analysis. The conclusions documented herein represent the results of the DTAWS investigation of available information for the following sites:

- Site 42 (CA-25), Mainside Sewage Treatment Plant Accumulation Area
- Site 73 (CA-45), Murphy Demo Accumulation Area
- Site 89 (M-15), South Coal Yard
- Site 90 (M-16), North Coal Yard
- Site 92 (M-20), Building 3063 Abandoned Degreaser
- O-07, Building 3220 Oil/Water Separator

We, the undersigned members of the QPMT, have reviewed the information contained in Table 1 of Attachment A and agree with the conclusions presented.

ANDREW GUTBERLET
EFA CHESAPEAKE
WASHINGTON, D.C.

LISA M. BRADFORD
US EPA REGION III
PHILADELPHIA, PENNSYLVANIA

STEPHEN MIHALKO
VIRGINIA DEQ
RICHMOND, VIRGINIA

MATIAS SANTIAGO
MCCDC QUANTICO, NREA BRANCH
QUANTICO, VIRGINIA

Example 2A – EPA concurrence letter

32501.005
08.01.05.0001

UNITED STATES ENVIRONMENTAL PROTECTION AGENCY

REGION 4

345 COURTLAND STREET, N.E.
ATLANTA, GEORGIA 30365

4WD-FFB

OCT 04 1995

CERTIFIED MAIL
RETURN RECEIPT REQUESTED

Commanding Officer,
Southern Division, NAVFACENGCOM
Attn: Mr. Bill Hill (code 1851)
P.O. Box 190010
North Charleston, South Carolina 29419-9010

SUBJ: Concurrence with July 1995 Final Preliminary Site Characterization (PSC) Report for Site 5 (Borrow Pit), Naval Air Station (NAS) Pensacola, Florida EPA Site ID No.: FL9170024567.

Dear Mr. Hill:

The U.S. Environmental Protection Agency (EPA), has reviewed the Site 5 (Borrow Pit) PSC report, concurs with the Navy's recommendation for no further investigation, and accepts this document as final.

If you have any questions please contact me (404) 347-3555, extension 6462.

Sincerely,

Jay V. Bassett,
Remedial Project Manager,
Federal Facilities Branch

cc: Ron Joyner, NAS Pensacola
Henry Beiro/Brian Cladwell, Ensafe, Pensacola
Allison Dennen, Ensafe, Memphis
John Mitchell, FDEP

Example 2A cont. – State concurrence letter

32501.005
09.01.05.0007

Department of Environmental Protection

Lawton Chiles
Governor

Twin Towers Building
2600 Blair Stone Road
Tallahassee, Florida 32399-2400

Virginia B. Wetherell
Secretary

August 25, 1995

RECEIVED
AUG 31 1995

CERTIFIED MAIL
RETURN RECEIPT REQUESTED

Mr. Bill Hill
Code 1851
Southern Division
Naval Facilities Engineering Command
P.O. Box 190010
North Charleston, South Carolina 29419-0068

RE: Final Preliminary Site Characterization (PSC) Report for Site 5 (Borrow Pit), Naval Air Station Pensacola.

Dear Mr. Hill:

I have completed the technical review of the subject document, dated July 7, 1995 (received July 14, 1995). The analytical results from soil and groundwater samples are below the Preliminary Remedial Goals (PRGs) and Florida Groundwater Guidance values respectively. Thus, this document with the recommendations of no further action, is acceptable as final.

If I can be of any further assistance with this matter, please contact me at (904) 921-9989.

Sincerely,

David M. Clowes, P.G.
Remedial Project Manager

/dmc

cc: Ron Joyner, NAS Pensacola
Jay Bassett, EPA Region IV
Henry Beiro/Brian Caldwell, Ensafe, Pensacola
Steve Cowan, Bechtel, Knoxville, TN
Tom Moody, FDEP Northwest District
John Mitchell, FDEP Natural Resource Trustee

TJB B JJC BB-JC ESN ESN

"Protect, Conserve and Manage Florida's Environment and Natural Resources"

Printed on recycled paper.

Appendix B

Example ROD language for NFA site

Example - Site 1B – MCB Camp Pendleton

2.6 No Action Selected for Sites 1B, 1C, 1G, 1I, 2C, 2D, 2E, 2F, 2G, 10, 16, 17, 18, 27, 32, 34, 35, 36, 37, 38, 39, 40, 41, and 42

This section presents descriptions, histories, characteristics, and risks associated with the OU3 no action sites. For the no action sites, all inorganics exceeding screening criteria and any detected organics are typically shown in the site-specific figures.

2.6.1 Site 1B - Refuse Burning Ground in 11 Area

Site 1B is a former refuse burning ground in the 11 Area.

2.6.1.1 Site Name, Location, and Description

Site 1B - Refuse Burning Ground in 11 Area, is located in the San Luis Rey Basin, on an unpaved road intersecting 14th Street, approximately 0.5 mile southeast of Vandegrift Boulevard (Figure 1-2). The former burning ground is approximately 340 feet long and 100 feet wide. The site is bordered on the east and south by a densely vegetated stream-cut canyon. To the north and west of Site 1B are low rolling hills with light to moderate vegetation.

No perennial surface water is present in the vicinity of the site. During significant rainfall events, surface water percolates into the subsurface, evaporates, or runs off the site and eventually discharges into Pilgrim Creek, approximately 0.5 mile to the east.

The burning ground is no longer in use and military and civilian personnel are not on site on a regular basis. The nearest residential housing is approximately 0.25 mile southwest of the site. No base production wells are located within a 1-mile radius of Site 1B. There are no water production wells in the San Luis Rey Basin.

2.6.1.2 Site History and Enforcement Activities

Site history and enforcement activities for refuse burning grounds are described in Section 2.4.1.2.

2.6.1.3 Summary of Site Characteristics

Site 1B was investigated in June and July 1996 during the RI for Group D sites. Five soil samples were collected from two borings and were analyzed for metals, VOCs, SVOCs, and pesticides and PCBs. No sediment or surface-water samples were collected because no surface water was present on site. No groundwater samples were collected because drilling refusal occurred at less than 50 feet below ground surface, before encountering sufficient groundwater for sampling.

2.6.1.3.1 Geology and Hydrogeology

Shallow geology at Site 13 consists of Quaternary alluvium overlying granitic rock (bedrock basement complex). Groundwater is assumed to flow to the east, following surface topography. The depth to groundwater is estimated to be more than 80 feet below grade.

2.6.1.3.2 Soil Results

This section discusses analytical results from soil sampling at Site 1B. Results are summarized in Figure 2-13, which presents detected organics and any inorganics that exceed risk/hazard criteria.

Organics

No organic compounds were detected at Site 1B at concentrations exceeding PRGs (Figure 2-13). Chlorinated pesticides (4,4'-DDD, 4,4'-DDE, and 4,4'-DDT) were detected at low concentrations in the surface sample from boring 1BB-02; the highest concentration was 0.011 mg/kg. In addition, 4,4'-DDT was detected at a concentration of 0.003 mg/kg in the 5-foot sample from the

same boring. No organics were detected at concentrations exceeding ecological risk screening criteria.

Inorganics

Two metals, arsenic and beryllium, were detected at concentrations exceeding PRGs in two of five and four of five samples, respectively (Figure 2-13). All detections were below background levels. Only lead exceeded ecological risk screening criteria.

Summary

No organics were detected in soil at concentrations exceeding PRGs; arsenic and beryllium were the only inorganics detected, but concentrations were below background. Because only a few low-level detections of inorganics were reported and the depth to groundwater at the site is about 80 feet below ground surface, groundwater is not expected to be impacted. No significant site-related contamination exists at Site 1B.

2.6.1.4 Summary of Risks Associated with Site 1B

Human health and ecological risk assessments were conducted for Site 1B using data collected during the Group D RI. Risk assessment methodologies are summarized in Section 2.4.1.4. Risk assessment summaries for Site 1B are presented in this section.

2.6.1.4.1 Human Health Risk Characterization

COPCs in Site 1B soil include metals and pesticides. Based on the conceptual site model, current/future workers and future residents could be exposed to soil contaminants through incidental ingestion, dermal contact, and inhalation of particulates.

The total residential cancer risk for maximum reported COPCs is 1.1×10^{-5}. The primary contributors to risk are arsenic (approximately 76 percent of the total risk) and beryllium (approximately 24 percent of the total risk). However, arsenic and beryllium concentrations at Site 1B are below the respective background concentrations. Excluding arsenic and beryllium as naturally occurring, the incremental site risks calculated using EPA and Cal/EPA PRGs are both 1.4×10^{-8}, which is below the lower end of the risk management range. The cumulative residential hazard (noncarcinogenic) for maximum detected COPCs is 0.51.

The Site 1B residential cancer risk and noncarcinogenic hazard are less than the risk and hazard criteria. In addition, the maximum lead concentration in soil (26.8 mg/kg) at Site 1B is below the EPA and Cal/EPA residential PRGs of 400 and 130 mg/kg, respectively. Therefore, Site 1B soil is considered protective of human health.

Groundwater is not considered a complete exposure pathway for either current/future workers or future residents. Groundwater sampling was not performed at Site 1B because drilling refusal occurred before encountering sufficient groundwater for sampling. Site 1B is not located above a shallow aquifer associated with any of the four major groundwater basins at MCB Camp Pendleton (i.e., San Mateo, San Onofre, Las Flores, or Santa Margarita Basin). The site is topographically higher than, and isolated from, the aquifers associated with these major basins. Therefore, groundwater at Site 1B was not evaluated further in the HHRA.

2.6.1.4.2 Ecological Risk Assessment

Lead was the only preliminary COPEC with an HQ exceeding 1.0 (Figure 2-13). The HQ for lead (1.5) exceeds but is close to 1.0 for deer mouse, indicating that the potential for toxicity is relatively low. HQs are less than 1.0 for the other representative species evaluated.

Site 1B includes nonnative grasslands and coastal sage scrub habitat. Several wildlife species were observed, and special-status species could be present on site.

None of the preliminary COPECs were retained as final COPECs. The potential for exposure and effects is considered low. The HQs for all but one of the representative species are less than 1.0, indicating little or no potential for toxicity. In addition, because of its small size (approximately 1.3 acres) and proximity to developed areas, this site would provide only a limited proportion of the habitat available for the representative wildlife species. Therefore, ecological receptors would not likely be sufficiently exposed to potentially harmful contaminant concentrations to cause adverse effects.

2.6.1.5 Description of the No Action Alternative

The no action alternative selected for Site 1B includes no institutional controls. Site 1B is considered protective of human health and the environment for the following reasons:

- Under the future residential exposure scenario, maximum soil concentrations resulted in an ILCR less than $1x10^{-6}$ and an HI less than 1.0.
- The maximum lead concentration is below the screening values.
- Groundwater is not considered a complete exposure pathway for either current/future workers or future residents.
- The refuse burning ground is no longer in operation, and military and civilian personnel are on site infrequently.
- Evaluation of potential ecological risks from exposure to soil indicated that the potential for exposure and effects is low and will not likely pose a risk to ecological receptors.

Appendix C

Examples of concurrence letter for NFA sites in RODs

Example 1C – EPA concurrence letter for NFA ROD for OU5

UNITED STATES ENVIRONMENTAL PROTECTION AGENCY
REGION 4
ATLANTA FEDERAL CENTER
61 FORSYTH STREET, SW
ATLANTA, GEORGIA 30303-8909

Joe Daniel
ABB

FEB 11 1998

CERTIFIED MAIL
RETURN RECEIPT REQUESTED

4WD-FFB

Commanding General
Marine Corps Logistics Base-Albany
Albany, Georgia 31704-1128

SUBJ: Record of Decision
Operable Unit 5
MCLB-Albany NPL Site
EPA ID# GA7170023694
Albany, GA 31704

Dear Sir:

The U.S. Environmental Protection Agency (EPA) Region 4 has reviewed the above subject decision document and concurs with No Further Response Action Planned decision for Operable Unit 5. This remedy is supported by the previously completed Remedial Investigation, Feasibility Study and Risk Assessment Report, as well as the Interim Remedial Action for the grit disposal areas at PSC 8. The remedy of No Further Response Action Planned is protective of human health and the environment.

EPA appreciates the coordination efforts of MCLB Albany and the level of effort that was put forth in the documents leading to this decision. EPA looks forward to continuing the exemplary working relationship with MCLB Albany and Southern Division Naval Facilities Engineering Command as we move toward final cleanup of the NPL site.

Sincerely,

Richard D. Green
Acting Director
Waste Management Division

cc: Sid Allison, SOUTHDIV

Recycled/Recyclable • Printed with Vegetable Oil Based Inks on 100% Recycled Paper (40% Postconsumer)

Example 1C cont.– State concurrence letter for NFA ROD for OU5

Georgia Department of Natural Resources

205 Butler Street, S.E., Suite 1162, Atlanta, Georgia 30334
Lonice C. Barrett, Commissioner
Environmental Protection Division
Harold F. Rahels, Director
404/656-2833

December 9, 1997

Mr. Joel Sanders, Code 1868
MCLB Remedial Project Manager
Southern Division, Naval Facilities
Engineering Command
2155 Eagle Drive, P.O. Box 190010
Charleston, S.C. 29419-9010

CERTIFIED MAIL
RETURN RECEIPT REQUESTED

RE: Record of Decision, Operable Unit 5,
Marine Corps Logistics Base, Albany

Dear Mr. Sanders:

The Georgia Environmental Protection Division (EPD) has reviewed the Final Record of Decision for Operable Unit 5 (OU 5) at the Marine Corps Logistics Base (MCLB), Albany, Georgia. This Final Record of Decision addresses potential risks to human health and the environment resulting from surface and subsurface soils, sediment and surface water at OU 5. Groundwater underlying OU 5 will be addressed under the investigation of Operable Unit 6 - Basewide Groundwater.

SITE BACKGROUND

OU 5 consists of two Potential Sources of Contamination (PSC):

PSC 8 (the Grit Disposal Area) is an undeveloped area of approximately 350 feet by 120 feet, located southeast of the former Domestic Wastewater Treatment Plant (DWTP). Between 1962 and 1979, trenches in this area received material collected in the grit chamber for the DWTP. The grit consisted primarily of sand, broken glass, nuts, bolts, and other dense, nonbiodegradable material, contaminated with polychlorinated biphenyls, polyaromatic hydrocarbons, and chromium. A Removal Action was undertaken at this PSC under an Interim Record of Decision (IROD) signed in June of 1995. Seventy-nine cubic yards of contaminated grit were excavated and sent off site for treatment and disposal at a landfill permitted under the Toxic Substances Control Act.

PSC 14 (the DWTP) operated from 1952 to 1990, treating sanitary waste from the base. The DWTP also accepted treated effluent from the base Industrial Wastewater Treatment Plant (IWTP). Because the IWTP treated electroplating and aluminum conversion coating wastes, the sludges from the DWTP were determined by EPD to be a hazardous waste. The DWTP was closed pursuant to an Administrative Order (No. EPD-HW-616) in 1990. A clean closure certification was issued on October 20, 1995.

SITE RISKS

The Baseline Risk Assessment identified no unacceptable post-removal risks associated with these PSCs. A future residential exposure scenario for PSC 8 indicated a non-cancer hazard index (HI) of 0.1, well below the point of departure of 1.0. The cancer risk for the residential exposure scenario was $8x10^{-8}$, which is below the point of departure of $1X10^{-6}$. For PSC 14, the potential future risks identified for a residential exposure scenario were an HI of 0.7, and a cancer risk of $7X10^{-6}$. The cancer risk was within the U.S Environmental Protection Agency's acceptable cancer risk range of $1X10^{-4}$ to $1X10^{-6}$. Use of the risk range was deemed acceptable given the access controls on base and the industrial use of the site.

REMEDY SELECTION

In accordance with the findings of the risk assessment, the Final Record of Decision for OU 5 formalizes a determination of No Further Remedial Action Planned (NFRAP) for surface water, sediment and soil. Removal of the contaminated grit from the disposal trenches (PSC 8) and the RCRA removal of the sludge and clean closure of the DWTP (PSC 14) have already addressed risks to human health and the environment. No unacceptable risks remain at OU 5. Georgia EPD concurs with the Final Record of Decision for OU 5.

We look forward to continued progress in investigation and cleanup activities at MCLB. If you have questions, or need further assistance, please contact Madeleine Kellam at (404) 656-2833.

Sincerely,

Harold F. Reheis

Harold F. Reheis
Director
Georgia Environmental Protection Division

c. Mr. Richard Green, U.S. EPA
Mr. Robert Pope, U.S. EPA
Mr. Joel Sanders, SOUTHDIV
Lt. G. Alan Frantz, MCLB

File: MCLB (R)

Example 2C – EPA concurrence letter for NFA ROD for OU 17

32501.042
05.01.42.0007

UNITED STATES ENVIRONMENTAL PROTECTION AGEI
REGION 4
ATLANTA FEDERAL CENTER
61 FORSYTH STREET, SW
ATLANTA, GEORGIA 30303-8909

SEP 2 5 1998

RECEIVED
DEC 1 8 1998

CERTIFIED MAIL
RETURN RECEIPT REQUESTED

4WD-FFB

Commanding Officer
Naval Air Station Pensacola
190 Radford Boulevard
Pensacola, Florida 32508-5217

SUBJ: Record of Decision - Operable Unit 17
NAS Pensacola NPL Site
Pensacola, Florida

Dear Sir:

The U.S. Environmental Protection Agency (EPA) Region 4 has reviewed the above subject decision document and concurs with the selected remedy for the Remedial Action at Site 42. This remedy is supported by the previously completed Remedial Investigation and Baseline Risk Assessment Reports.

The selected remedial alternative is no further action. This involves taking no further remedial actions at the site and leaving the environmental media as they currently exist. This remedial action is protective of human health and the environment, complies with Federal and State requirements that are legally applicable or relevant and appropriate to the remedial action and is cost effective.

EPA appreciates the coordination efforts of NAS Pensacola and the level of effort that was put forth in the documents leading to this decision. EPA looks forward to continuing the exemplary working relationship with NAS Pensacola and Southern Division Naval Facilities Engineering Command as we move toward final cleanup of the NPL site.

Sincerely,

Richard D. Green
Director
Waste Management Division

cc: Elsie Munsell, Deputy Assistant Secretary of the Navy
Ron Joyner, NAS Pensacola
Bill Hill, SOUTHDIV
David Grabka, FDEP

bcc: Allison Abernathy, FFRRO/OSWE

Example 2C – State concurrence letter for NFA ROD for OU 17

Department of Environmental Protection

Jeb Bush
Governor

Twin Towers Office Building
2600 Blair Stone Road
Tallahassee, Florida 32399-2400

David B. Struhs
Secretary

May 22, 2000

Captain Randal Bahr, Commanding Officer
Naval Air Station Pensacola
190 Radford Boulevard
Pensacola, Florida 32508-5217

Dear Captain Bahr:

The Department of Environmental Protection concurs with the Navy's Record of Decision (ROD) for Operable Unit 17, Naval Air Station Pensacola.

The ROD specifies No Action. The remedy is cost effective and provides adequate protection of public health, welfare, and the environment.

We appreciate your continued cooperation and look forward to an expeditious economic and environmental recovery of Naval Air Station Pensacola. If you have any questions concerning this letter of concurrence, please contact Joe Fugitt at (850) 921-9989.

Sincerely,

David B. Struhs
Secretary

DBS/jff

cc: Gena D. Townsend, USEPA Region 4
Bill Hill, SOUTHNAVFACENGCOM
Charlie Goddard, FDEP Northwest District

"Protect, Conserve and Manage Florida's Environment and Natural Resources"

Printed on recycled paper.