NAVAL FACILITIES ENGINEERING SERVICE CENTER
Port Hueneme, California 93043-4370

Technical Report
TR-2075-ENV

Technology Transfer Report: Production Base Catalyzed Decomposition Process Guam, Mariana Islands

October 1997

Approved for public release; distribution is unlimited.

Printed on recycled paper

DISCLAIMER

This report was prepared as an account of work sponsored by an agency of the United States Government. Neither the United States Government nor any agency thereof, nor IT Corporation, nor any of their employees, makes any warranty, express or implied, or assumes any legal liability or responsibility for the accuracy, completeness, or usefulness of any information, apparatus, product, or process disclosed, or represents that its use would not infringe privately owned rights. Reference herein to any specific commercial product, process, or service by trade name, trademark, manufacturer, or otherwise does not necessarily constitute or imply its endorsement, recommendation, or favoring by the United States Government or any agency thereof, or IT Corporation. The views and opinions of authors expressed herein do not necessarily state or reflect those of the United States Government or any agency thereof.

Executive Summary

The first production Base Catalyzed Decomposition Process (BCDP) system was operated successfully on Guam in 1995. The unit treated polychlorinated biphenyl (PCB) contaminated soil at rates up to two tons per hour, and successfully treated 11,700 tons of soil at PCB levels as high as 2,000 parts per million (ppm) to below 0.5 ppm. A novel Air Pollution Control System (APCS) produced a stack gas that was cleaner than required by hazardous waste incinerators standards.

The Naval Facilities Engineering Service Center (NFESC) managed the development of the BCDP for the Naval Facilities Engineering Command, Pacific Division (PACDIV) from the laboratory to a full production system over a 6-year period. Conventional remediation on Guam would have required that the contaminated material be excavated, placed in drums, and shipped over 6,000 miles to a mainland disposal facility — a very expensive procedure. In finding a solution to this problem, the Navy developed a remediation system that is cost effective, on the mainland as well as Guam, and environmentally safe to operate.

The soil to be treated is crushed, mixed with sodium bicarbonate, and fed into an indirectly fired Rotary Kiln Reactor (RKR). In the RKR, the PCBs and naturally occurring organics are driven off the soil at temperatures up to 800 degrees Fahrenheit (°F). The bicarbonate catalyzes this process by decomposing some of the PCBs and causing them to desorb at reduced temperatures.

The innovative air capture system starts in the calciner where steam is injected as the sweep gas to carry out the desorbed PCBs. The oxygen content in the calciner is too low to support combustion, so there is no danger of combustion occurring and creating an overpressure that would result in the release of contaminants from the calciner.

The RKR off-gas moves through a cyclone to remove larger dust particles, and then into a Wet Electrostatic Precipitator (WESP) where almost all the contaminants are removed. Despite the presence of organic combustibles, the precipitator can be operated safely because oxygen levels are kept too low to support combustion. Additional steam is injected into the WESP as necessary to maintain the oxygen level in the gas being handled to below 5 percent. Since oxygen is required to form dioxins, low oxygen levels in the process also inhibit the formation of these undesirable compounds.

When the gas exits the WESP it passes through a shell-and-tube heat exchanger where the steam is condensed. In addition to maintaining low oxygen levels, another great advantage of using steam as an inerting gas is that it can easily be removed from the gas stream. Gas leaves the condenser at about 80°F. For final polishing, the off-gas is chilled to 40 to 50°F and passes through a High Efficiency Mist Eliminator (HEME) and a Carbon Adsorber. Very little PCB buildup occurs in the Carbon Adsorber because most of the PCBs have been condensed and removed as a liquid. Because the WESP removes most of the PCBs and other condensible organics, the HEMEs and Carbon Adsorbers have very long lives.

The system is environmentally safe. If the WESP should go off-line because of a power or equipment failure, the off-gas still has to pass through the HEME and will be almost as clean as with the WESP on-line. Although the life of the HEME will be shortened, no significant emission excursion can occur.

A stack test, conducted while the BCDP was treating almost 2 tph of soil, showed that the stack gas flow was under 30 cubic feet per minute (cfm). PCB Destruction Removal Efficiency (DRE) was 7 nines (or 99.99999 percent), and the dioxin and furan Toxic Equivalent (TEQ) was 0.18 nanograms per cubic meter. Metals were not measured, and the laboratory results for the particulate analysis were not reliable, however, particulates emissions were conservatively reported at 3 pounds a year. Particulate and metals emissions should be almost non-existent since the off-gas passes through the HEME (which is a three-inch-thick tightly woven filter) at 40 to 50°F prior to discharge.

This Technology Transfer Report briefly describes the history of the BCDP and provides references to the research and demonstration plant work that lead directly to the final remediation system. Plant design information and operating data are provided in sufficient detail for the technology to be reproduced. A complete process design package, including Process Flow Diagrams (PFD) and material balances, Piping and Instrumentation Diagrams (P&ID), and a Plot Plan of the system on Guam, are included. An economic analysis was performed and provides a summary of the actual costs associated with the Guam BCDP and projected costs for future similar projects. The Appendices contain the Standard Operating Procedures (SOP) used on Guam, analytical results, and equipment data logs that were collected during the remediation.

As with any first-of-a-kind plant, a number of things were learned that should be incorporated into the next generation BCDP plant. Based on the lessons learned on Guam, the next generation BCDP

could cost less to build and operate, and could operate more efficiently and with even lower stack emissions. The Economic Analysis Section of this report (Section 4.0) discusses the economic improvements that can be achieved. The Conclusions and Recommendations Section (Section 6.0) discusses design changes that can be made to achieve increased operating efficiency and significantly lower operating costs.

Table of Contents

Executive Summary ES-1
List of Figures iv
List of Tables vi
Acknowledgments viii
List of Appendices x
1.0 Introduction 1-1
1.1 Project History 1-1
1.2 Technology Description 1-4
1.2.1 Stirred Tank Reactor 1-4
1.2.2 Rotary Kiln Reactor System 1-4
1.3 Remediation on Guam 1-8
1.3.1 Demonstration to Production System 1-8
1.3.1.1 Plant Physical Changes 1-9
1.3.1.2 Air Pollution Control System 1-11
1.3.2 Rapid Start System 1-15
1.3.3 Full Scale Remediation 1-18
2.0 BCDP Production Plant Description 2-1
2.1 Plant Description 2-1
2.2 Solids Handling Equipment 2-7
2.2.1 Rock Crusher 2-7
2.2.2 Reactor Feed Conveyor 2-8
2.2.3 Bicarbonate Feed System 2-8
2.2.4 Rotary Kiln Reactor 2-8
2.3 Air Pollution Control System Design Basis 2-10
2.3.1 Organics Removal Mechanism 2-12
2.3.1.1 Removal by Condensation 2-15
2.3.1.2 Removal by Dissolving in Water 2-21
2.3.1.3 Dioxin Emissions 2-23
2.3.1.4 Metals and Particulate Removal 2-24
2.3.1.5 Volatile Organic Compound Removal 2-24

2.3.2 Steam as an Inerting Gas 2-24
2.3.2.1 Minimum Oxygen Concentration 2-25
2.3.2.2 Measurement of Oxygen in the WESP 2-28
2.3.2.3 WESP Oxygen Control System 2-30
2.4 Air Pollution Control System Equipment 2-30
2.4.1 Multiclone 2-31
2.4.2 Wet Electrostatic Precipitator 2-31
2.4.3 Primary Condenser 2-36
2.4.4 Venturi Scrubber/Bubble Tray Scrubber 2-37
2.4.5 Chiller Condenser 2-37
2.4.6 High Efficiency Mist Eliminator 2-38
2.4.7 Induced Draft Fan 2-40
2.4.8 Air Treatment Carbon 2-41
2.5 Wastewater Treatment Plant 2-41
2.5.1 Surge Tank 2-41
2.5.2 Flocculation System 2-41
2.5.3 Clarifier 2-42
2.5.4 Bag Filters and Oleophilic Media Drums 2-42
2.5.5 Water Carbon 2-42
2.6 Controls and Instrumentation 2-43
3.0 Plant Operation 3-1
3.1 Rapid Start System 3-1
3.1.1 Feed Preparation and Rotary Kiln Reactor 3-1
3.1.2 Air Pollution Control System 3-5
3.1.3 Wastewater Treatment Plant 3-12
3.1.4 Rapid Start Stack Test Results 3-13
3.1.5 Treatment of High Organic Soils and KPEG Residuals 3-16
3.2 Full Scale System 3-17
3.2.1 Feed Preparation and Rotary Kiln Reactor 3-17
3.2.2 Air Pollution Control System 3-20
3.2.3 Wastewater Treatment Plant 3-29

3.2.4 Stack Test Results 3-31
3.2.4.1 BCDP Emissions Compared to Incinerator Emission Standards 3-31
3.3 Residuals 3-34
4.0 Economic Analysis 4-1
4.1 Actual Cost on Guam 4-1
4.1.1 BCDP Capital Cost 4-1
4.1.2 Operating and Maintenance Cost on Guam 4-4
4.1.3 Per Ton Treatment Cost on Guam 4-7
4.2 Cost of a New System in the Continental United States 4-8
4.2.1 Capital Cost 4-8
4.2.2 Operating and Maintenance Cost 4-11
4.2.3 Cost as a Function of Site Size 4-12
5.0 Technology Applicability 5-1
6.0 Conclusions and Recommendations 6-1
6.1 Conclusions 6-1
6.2 Recommendations 6-1
6.2.1 Feed Handling and Preparation 6-1
6.2.2 Rotary Kiln Reactor 6-2
6.2.3 Reactor Product Handling System 6-2
6.2.4 Air Pollution Control System 6-3
6.2.5 Wastewater Treatment Plant 6-9
6.2.6 Minimizing Residuals 6-11
7.0 References 7-1

List of Figures

Figure	Title	Page
1-1	Building 3009 and Areas Remediated Using the BCDP	1-2
1-2	The BCDP Rotary Kiln Reactor and Air Pollution Control System	1-5
1-3	The Demonstration Plant Rotary Kiln Reactor and Air Pollution Control System	1-12
1-4	The BCDP Rapid Start System	1-17
2-1	RKR Breach Fines Drop	2-11
2-2	Percent Oxygen Versus Temperature in Water Saturated Air	2-29
2-3	Wet Electrostatic Precipitator (WESP)	2-32
2-4	High Efficiency Mist Eliminator (HEME)	2-39
2-5	RKR Control Screen	2-43
2-6	APCS Control Screen	2-45
2-7	ID Fan Control Screen	2-45
2-8	WESP Control Screen	2-46
2-9	Pressures Historical Screen	2-48
3-1	Rapid Start System Process Flow Diagram	3-2
3-2	Gas Flow Rate and Pressure Drop During the First HEME Unit's Last 90 Hours of Operation Starting at 0600 Hours on July 14, 1995 (Rapid Start)	3-8
4-1	Per Ton Treatment Cost for a Given Site Size for a BCDP Built and Used for One Site Only	4-14

List of Figures *(continued)*

Figure	Title	Page
4-2	Minimum Cost Plant Size for a Given Site Size and The Corresponding Dollar Per Ton Treatment Cost	4-15
6-1	Alternative WESP Water Usage Design	6-5
6-2	Proposed WWTP for the BCDP	6-9

List of Tables

Table	Title	Page
2-1	Example Organics to be Evaluated	2-14
2-2	Vapor Pressure, psia, at Temperature, °F	2-14
2-3	Conditions at Removal Points	2-15
2-4	Analysis of Acetone in the Gas Stream	2-17
2-5	Summary of the Saturated Flow Rate of Target Compounds at Different Temperatures	2-18
2-6	Removal Efficiency at the WESP as a Function of the PCB Concentration in the Soil	2-19
2-7	Removal Efficiency at the HEME as a Function of the PCB Concentration in the Soil	2-19
2-8	Equilibrium Concentration of Phenol in the Gas Phase Above 100°F Water	2-22
2-9	Equilibrium Concentration of Phenol in the Gas Phase Above a Six Percent Water Solution at Various Temperatures	2-23
2-10	Maximum Permissible Oxygen Percentage to Prevent Ignition of Flammable Gases and Vapors Using Nitrogen and Carbon Dioxide for Inerting	2-26
2-11	Historical Instrument Groupings	2-47
3-1	Rapid Start System Material Balance	3-3
3-2	Operating Rate and On-Line Percent During Full Scale Operations	3-20
3-3	BCDP Operation Between 0520 and 0645 Hours on September 9, 1996	3-24

List of Tables *(continued)*

Table	Title	Page
3-4	Infiltration Air Flow and Oxygen Content of the Gas Entering and Leaving the WESP	3-26
3-5	Residuals Inventory as of September 18, 1996	3-34
4-1	Purchase Cost of Equipment Supplied by the Demonstration Contractor That was Used in the Production Plant	4-1
4-2	Purchase Cost of Equipment Purchased by the Remediation Contractor and Used in the Production Plant	4-3
4-3	Factored Capital Cost Estimate for a BCDP Unit Constructed in the Continental U.S.	4-4
4-4	BCDP Plant Daily Operating Cost on Guam	4-5
4-5	Diesel Fuel and Electricity Usage Per Ton of Production	4-5
4-6	BCDP Daily Operating Cost on Guam and Fixed and Variable Operating Cost for a Mainland BCDP	4-11
4-7	Capital, Operating, and Total Cost for Different Capacity BCDP Units Built and Operated to Treat 10,000 Tons of Soil at One Site	4-13
4-8	The Optimum Range of BCDP Plant Size to Treat Large Sites and The Corresponding Cost Per Ton and Treatment Duration	4-16
5-1	RCRA Codes for Wastes Treatable by BCDP	5-2
5-2	General Contaminant Groups Treatable by BCDP	5-2

List of Appendices

Appendix	Title
A	Plot Plan, Process Flow Diagram and Material Balance, and Piping and Instrumentation Diagrams
B	Rapid Start Plant Operating Data
C	Full Scale Plant Operating Data
D	Standard Operating Procedures (SOP)
E	Rapid Start Stack Test Report Summary
F	Full Scale System Stack Test Report Summary
G	PCB Analytical Data for Raw and Processed Soil
H	Acronyms

1.0 Introduction

This section provides an overview, and discusses the history of the Base Catalyzed Decomposition Process (BCDP) remediation technology used on Guam.

1.1 Project History

Building 3009 at Naval Station Guam was the facility used for electrical transformer maintenance for the entire Western Fleet after World War II [6]. Until 1977, when the hazards associated with polychlorinated biphenyls (PCB) were recognized and U.S. Environmental Protection Agency (EPA) began to regulate PCBs under the Toxic Substances Control Act (TSCA), significant soil contamination occurred around the building. Floor drains ran into an underground pipe that discharged into a drainage ditch north of Building 3009. Figure 1-1 shows the building and areas of PCB contamination remediated by the BCDP.

Conventional remediation technologies would require the Navy to ship the contaminated soil to the mainland for incineration or landfill. Because international shipping of hazardous waste overseas is restricted and very expensive, Naval Facilities Engineering Command, Pacific Division (PACDIV) looked for on-site treatment technologies as alternatives. At that time, late 1980s, none were available. PACDIV then turned to the Naval Civil Engineering Laboratory (NCEL) for help in developing an on-site remediation technology. Two separate Naval commands, the Naval Energy and Environmental Support Activity (NEESA) and NCEL, merged to form the current Naval Facilities Engineering Service Center (NFESC) in October 1993.

NFESC had been working with a technology developed by the EPA's Risk Reduction Engineering Laboratory (RREL) that utilized potassium polyethylene glycol (KPEG) to dechlorinate PCBs in soil. In June 1988, a pilot scale KPEG chemical dechlorination demonstration was conducted at Building 3009. The reactor was a 75 horsepower steam jacketed mixer with a 65 cubic feet working capacity. A typical batch consisted of 3,400 pounds of soil, 1,555 pounds of 400 molecular weight polyethylene glycol (PEG-400), and 285 pounds of potassium hydroxide (KOH). The batch was heated to 300 degrees Fahrenheit (°F) and held at that temperature for four to six hours.

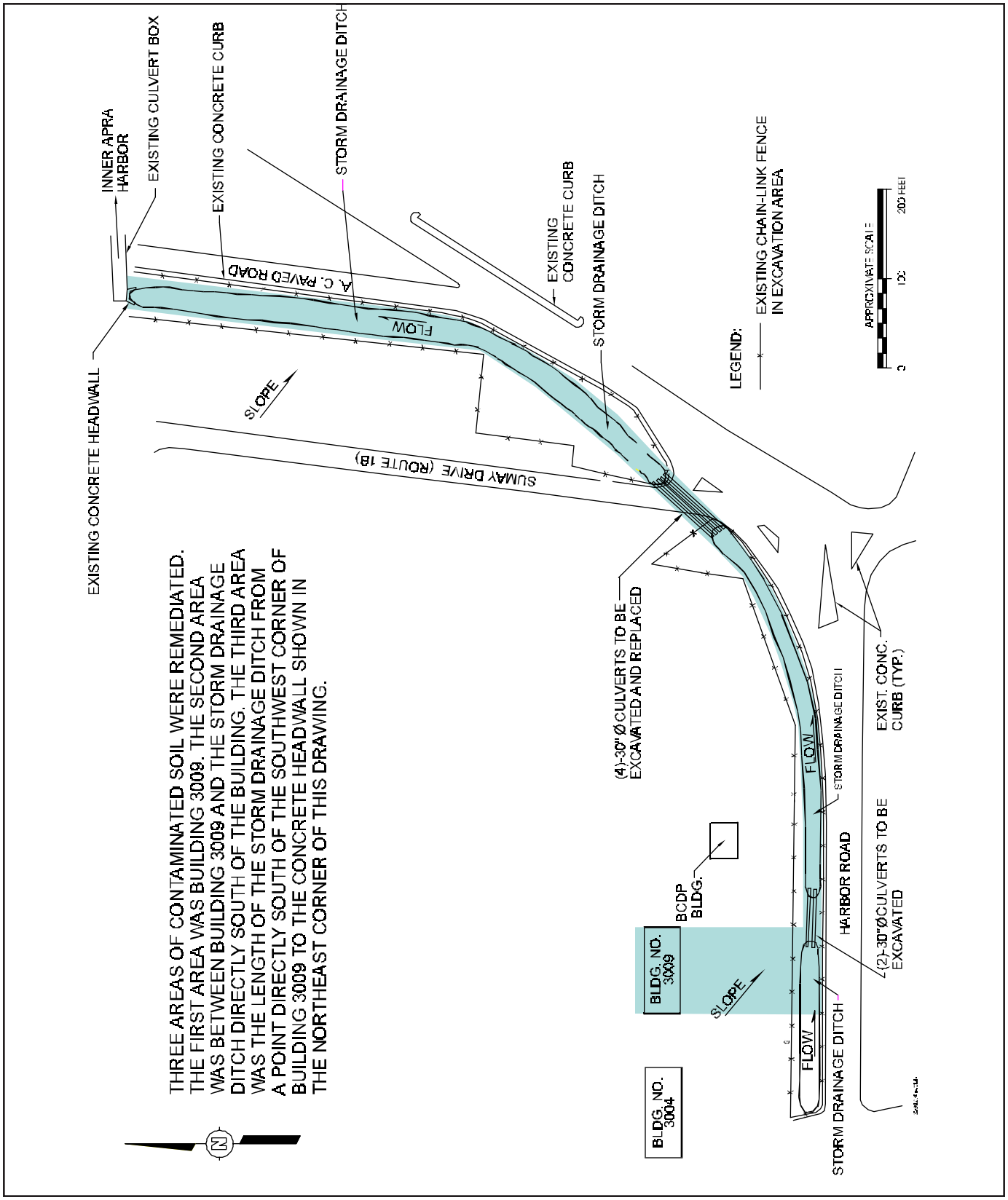

Figure 1-1
Building 3009 and Areas Remediated Using the BCDP

KPEG successfully treated soil averaging 3,535 parts per million (ppm) PCBs. PCB concentrations were reduced by an average of 99.84 percent (99.58 percent to 99.98 percent). No congener group exceeded 2 ppm. Although successful in treating soil, the demonstration runs identified several deficiencies in the KPEG process; expensive reagents added to the soil could not be recovered for reuse without great difficulty (which added significantly to the operating cost), and the process would need to be converted from batch to continuous in order to achieve satisfactory production rates.

In response to these deficiencies with KPEG, RREL initiated work on a second generation process called the BCDP. The BCDP was superior to the KPEG process. Upon NFESC's recommendation, PACDIV decided to use this process to remediate the site at Building 3009.

The strategy for remediating the site using the BCDP was to have a Research and Development (R&D) contractor design, build, and start up a demonstration unit on Guam. Once it was operating and proven, it would be turned over to a Remediation Contractor who would operate the plant and complete the remediation. Funding for the project was provided by PACDIV, and contractor technical oversight was provided by NFESC.

The U.S. Department of Energy's (DOE) Pacific Northwest National Laboratory (PNNL) was selected as the Demonstration Contractor. PNNL started equipment procurement in 1990, and assembled and tested the equipment at their facility in Washington State and at the Battelle Columbus facility in Ohio. A pre-deployment test was conducted at a Naval facility in Stockton, California, and in late 1992 the equipment was shipped to Guam.

In 1992 the Navy selected IT Corporation (IT) as the Remedial Action Contractor. IT was involved with the equipment testing and start-up to learn how to operate the equipment.

The first operation of the system was in July 1993, when about 30 tons of uncontaminated soil was processed (a "cold run") to provide a mechanical check of the system. The first PCB-contaminated soil, about 10 tons, was treated during a "hot run" in February 1994. In November of 1994, an extended hot run successfully treated about 50 tons of contaminated soil. In December 1994, the operation of the BCDP was turned over to IT. Changes were made to optimize equipment production for the remediation phase of the project. A crew mobilized to the site in January 1995,

and began the work of converting the system from a demonstration to a production unit. Major equipment modifications were made in the field while new equipment was procured.

Procurement of new equipment controlled the project schedule, and would not be completed until late 1995. Though there was no Feed Preparation Building and only a partial Air Pollution Control System (APCS), enough equipment had been received and installed by July 1995 to operate the plant. While awaiting delivery of the remaining APCS equipment, the plant was operated from early July through mid-September and processed about 600 tons of contaminated soil.

From September 1995 until February 1996 the remaining equipment was installed. The plant was operational in February and March as equipment was started up and debugged. By April, the plant was in full operation.

1.2 Technology Description

The BCDP consists of two separate processes: a solid treatment phase, the Rotary Kiln Reactor (RKR), and a liquid treatment phase, the Stirred Tank Reactor (STR). The RKR drives the PCBs off the soil and achieves partial destruction of the PCBs. The PCBs that are desorbed are condensed and collected in the RKR's APCS.

1.2.1 Stirred Tank Reactor

At the beginning of the project the intent was to treat the residual PCBs in the STR. Significant modifications were required to convert the RKR from a demonstration to a production unit. The modifications required to convert the STR to a production unit were also significant. Because of site-specific conditions, specifically the low volume of residuals created by the RKR, it was more cost effective to ship the residuals to the mainland for final disposal than to convert the STR to a production unit and use it to treat the residuals. A detailed description of the successful STR demonstration runs can be found in PNNL's report [6] covering the demonstration runs.

1.2.2 Rotary Kiln Reactor System

Figure 1-2 shows a general schematic of the BCDP process. Soil is crushed, mixed with bicarbonate, and introduced into the RKR. The RKR in Guam is a standard calciner with a carbon steel inner shell. As soil passes through the rotating shell, diesel burners heat the outside of the shell to about 900°F. The soil passing through the unit is heated above 700°F. PCBs and other organics partially decompose, and the remaining PCBs and organics volatilize into a vapor and enter the headspace

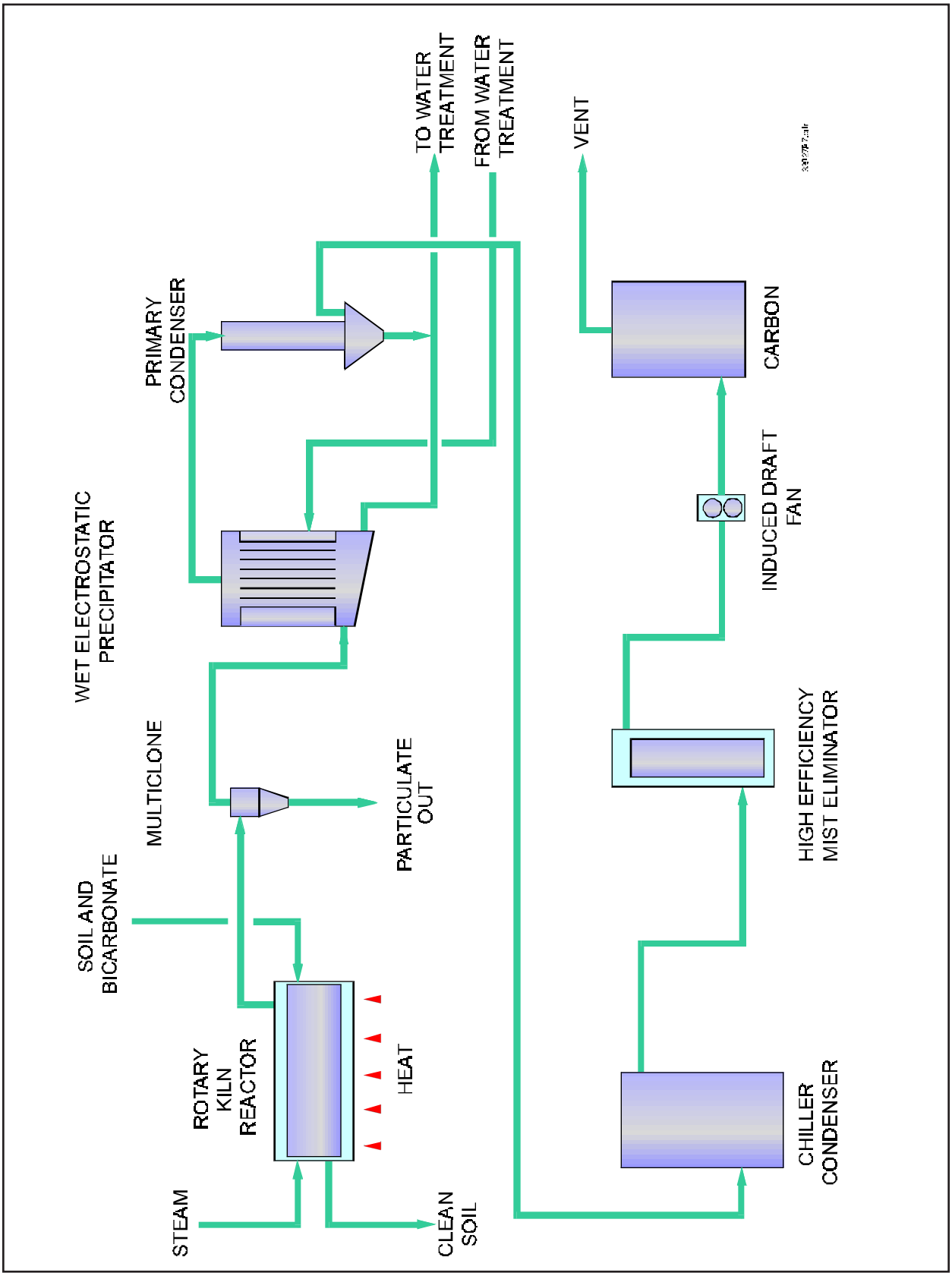

Figure 1-2
The BCDP Rotary Kiln Reactor and Air Pollution Control System

in the interior of the shell. Steam is introduced into the RKR opposite the soil feed end and moves through the shell countercurrent to the soil flow. As organics leave the solid phase and enter the gas phase in the RKR, the steam sweeps them out of the RKR to the Multiclone. Larger dust particles are removed in the Multiclone by centrifugal force and fall out, where they are collected in a drum for subsequent disposal.

The gas passes through the Multiclone to the Wet Electrostatic Precipitator (WESP). The gas continuously cools as it exits the RKR until it enters the WESP. As the gas cools, heavy semivolatile organics condense and form an aerosol (micron and submicron size droplets of organic liquid). When the gas enters the WESP, the aerosols and particulate are given an electrostatic charge. They then pass through a vertical tube sheet. The tubes in the tube sheet are charged opposite to the particles in the gas. This attracts the particulate and aerosols in the gas to the tube walls. As these solid particulates and liquid aerosols contact the walls of the tube, they agglomerate and are washed off by water which is constantly sprayed into the tubes. The WESP is almost 100 percent efficient at removing particulates and aerosols above three microns in size and 99 percent efficient in removing particulates and aerosols less than three microns in size.

Although the WESP is ideally suited for removing these small particles, this is the first application of a WESP in this configuration. Because of the strong electrostatic charges within the WESP, up to 40,000 volts, the WESP periodically sparks. This spark provides an ignition source, and if the gas in the WESP is within flammable or explosive limits, a fire or explosion could result. In the BCDP, steam is used to exclude oxygen from the WESP. By maintaining an oxygen level below 5 percent, the WESP can be safely operated with any level of organics in the entering gas stream.

The gas exiting the WESP is very clean. It is essentially free of particulates and organics that will condense at 212°F. This gas stream then enters the Primary Condenser where the steam is condensed. The Primary Condenser is a vertical shell and tube heat exchanger using cooling tower water on the shell side. The temperature of the gas is dropped from 212°F to 80-90°F, thereby condensing and removing almost all of the steam. After the steam is condensed and removed in the Primary Condenser, the only gases left are air that has infiltrated the system together with any non-condensible gases that were generated in the RKR. In the BCDP on Guam, about 130 actual cubic feet per minute (acfm) of gas enters the Primary Condenser. The gas flow leaving the Primary Condenser is about 30 acfm, a 75 percent reduction in gas volume due to cooling and condensation.

This reduced gas volume allows a corresponding size reduction in the remaining components of the system. This feature is unique to the BCDP system on Guam.

The off-gas leaving the Primary Condenser passes to the Chiller Condenser. The Chiller Condenser is a heat exchanger using an ethylene glycol water solution on the tube side. In this unit, the gas is cooled to about 40°F. This condenses additional organics and additional water.

The gas leaves the Chiller Condenser and travels to the High Efficiency Mist Eliminator (HEME). The HEME is a tightly woven fiberglass pad about three inches thick. As the gas passes through this pad, organic aerosols (that condensed because of the additional cooling after the WESP) are removed. The removal efficiency of the HEME is similar to the WESP, virtually 100 percent efficient on particles above three microns and over 99 percent efficient on particles less than three microns in size.

Although the HEME and WESP both remove the same type of material, they do so by very different mechanisms and are positioned in the APCS to compliment each other. Solid particulate and aerosols are collected on tube walls in the WESP and flushed off with water. While the HEME can remove solid particulate, the particulate will not drain out of the fabric. If particulate steadily accumulates on the surface of the HEME, it will eventually plug the fabric. Low viscosity organics that collect in the HEME will drain out of the unit, however, high viscosity organics will not drain and would accumulate and plug the HEME. The high viscosity organics and particulates that the HEME does not handle are previously removed in the WESP.

The HEME serves two major functions. It collects the organic aerosols that have formed after the cooling in the gas stream between the WESP and the HEME, and it acts as a backup should the WESP experience a power outage. The HEME is very close to being a fail-safe device. If the WESP should stop functioning, the HEME will receive the high viscosity organics and particulate and will remove them with the same efficiency seen in the WESP. They will, however, slowly plug the HEME until the pressure drop becomes excessive and the HEME has to be taken off-line. For this reason, two HEME units are configured in parallel. If one unit should plug, the gas stream is switched to the second unit and the first unit is changed out. While the WESP is operating, the HEME will receive a solids-free gas stream containing low viscosity organic aerosols. Under these conditions, the HEME has a very long service life.

After the HEME, the gas passes through the Induced Draft (ID) Fan. This Fan draws gases from the RKR through the entire APCS. Because the gas volume is significantly reduced in the Primary Condenser, the ID Fan capacity is very small. The WESP is a very low pressure drop device and the HEME, operated with low air flow, is also a low pressure drop device. In Guam, the ID Fan pulls a vacuum of only two to three inches of water.

After the ID Fan, the gas passes through the final polishing Carbon Adsorber and out the vent stack. The Carbon Adsorber will remove residual organic vapors, including residual PCB vapors that still exist even at the ambient temperature at which the carbon operates. Because of the Chiller Condenser, the Carbon Adsorber receives a dry gas stream. The gas leaving the Primary Condenser is water saturated. When this gas is cooled down to 40 degrees in the Chiller Condenser, it is still water saturated, however, after it leaves the Chiller Condenser, it heats up due to the ambient temperature. The lowest ambient temperature on Guam is about 65°F. Without the Chiller Condenser, this gas stream would still be cooling as it passed through the Carbon Adsorber and would deposit water on the carbon. By running the Carbon Adsorber dry, its adsorption capacity is significantly increased.

1.3 Remediation on Guam

The project went through three distinct work phases to remediate the Building 3009 site. The first phase of the job was to modify the BCDP demonstration plant into a remediation plant. The second phase was unanticipated. Because of equipment delivery schedules and the need to remediate an area at the site to erect the Feed Preparation Building, the partially-constructed BCDP system was operated for about two months. The third work phase was site remediation using the full scale system.

1.3.1 Demonstration to Production System

The BCDP went from the laboratory to a successfully demonstrated system on Guam over a period of about 5 years, from 1989 to 1994. The conversion of the system from a demonstration unit to a production unit covered a 3-year period from mid-1993 to February 1996. In December 1994, when the Remediation Contractor was given physical control of the system, an intense program began to convert the BCDP demonstration unit to a production unit.

The conversion work can be divided into two broad areas. Physical changes and additions were made to improve safety, increase production rates, and reduce the manpower required to operate the plant, and the APCS was redesigned and rebuilt.

1.3.1.1 Plant Physical Changes

Feed Preparation Building. During demonstration runs, the crusher and soil stockpile areas were outside. Guam gets about 90 inches of rain a year, and it is impossible to keep the reactor feed soil dry unless it is under roof. Wet soil presents a number of problems. It bridges in the reactor feed conveyor hopper, and at times was so wet it actually ran off of the feed conveyor belt. The soil is fed to the reactor through a double knife gate valve system. If wet soil is fed rapidly it packs up and plugs these valves requiring an operator to manually unplug the valve path. This actually limits the production rate to around half a ton per hour (tph) because the soil cannot be fed faster without repeated plugging.

The Demonstration Contractor recognized this problem and at the last demonstration run in November 1994 constructed a small sprung steel building to protect the soil from the rain. For the production runs, a prefabricated temporary storage facility (the Feed Preparation Building) was constructed to house the crusher, reactor feed hopper, and a large inventory of dry crushed soil. Soil crushing was only done when the soil was dry.

Although the crushing operation was not very dusty (because of the nature of the soil at the site), crushing contaminated soil is normally done in an enclosed building to prevent contaminated dust from being released into the air as a fugitive emission. Normally, a Feed Preparation Building is ventilated at four or five air changes per hour, and the exhaust air is filtered. Because of the absence of dusting, that was not necessary at this site.

Rotary Kiln Reactor Relocation. The RKR was relocated closer to the Feed Preparation Building so it could be fed directly from the building.

Reactor Product Storage Bins. The Demonstration Contractor collected the reactor product in metal bins that held about two tons of treated soil. This meant that at least once every two hours the bins had to be rotated. Not only is this labor intensive, but the work requires that the product be

stored in a temporary storage area while the laboratory determines whether or not the product quality met the regulatory treatment standard.

Twenty-four hour composites of the RKR product were analyzed to verify that the material was clean enough to backfill. The analysis took several hours, so sufficient space had to be provided to store 24 to 48 tons of material while waiting for the analytical results. Since production continued while the composite was being analyzed, a separate storage area had to be provided for this additional production. Three permanent storage bins were built to accomplish these objectives (i.e., provide surge capacity needed for sampling).

Radial Stacker Conveyor. The reactor product conveyor used during the production runs was replaced for several reasons. It was not long enough to move product from the reactor to the new storage bins, it was not mounted on wheels so it could easily be moved between storage bins, and it did not have the capacity to move two tph of reactor product. A new conveyor was purchased to solve these deficiencies.

Sample Collection/Decontamination Areas. An additional concrete slab was poured between the RKR and the Feed Preparation Building. Sumps were installed to collect potentially contaminated storm water and to provide boot wash areas. Sheds were constructed in the process areas for the storage of protective clothing and sampling equipment, including a refrigerator to store composite samples.

Control Room and Instrumentation. A 20-foot connex used for equipment shipping was converted to a control room, and a new computer control system was installed. The previous control system software was custom-written for the demonstration unit, was not suitable for long-term operation, and was not compatible with new system equipment. Off-the-shelf software has recently been developed and was procured for the reconfigured BCDP. The new software permits incorporation of new system components and allowed for alarms to be installed for critical operating parameters. Also, control systems were added so operating conditions could be monitored and changed from the control room, if required.

Laboratory. An on-site laboratory was built and equipped to handle the production samples.

Catwalks and Platforms. Occupational Safety and Health Administration (OSHA) approved ladders and platforms were built to allow safe access to points where plugs could occur in the soil feed system. The operating platform that ran along the side of the RKR was expanded and covered to provide protection from the sun and rain.

Secondary Containment. Tanks and equipment that held contaminated water were provided with secondary containment. Some of this equipment was moved into an existing 30-foot-by-40-foot building at the site. Equipment that would not fit into this building was diked, and sump pumps were installed to remove water that accumulated in the dikes.

Water Treatment Plant. A water treatment plant was required to treat process water from the new APCS, water generated during equipment decontamination and washdowns, and potentially contaminated storm water.

1.3.1.2 Air Pollution Control System

The APCS on the demonstration system did not perform as designed, but the knowledge gained from the demonstration runs was instrumental in the successful redesign efforts for the production unit.

Figure 1-3 shows the demonstration APCS. RKR off-gas first went through a cyclone where the larger particulate (>10 microns in size) was removed. The gas then flowed through a baghouse using high temperature bags where almost all remaining particulate was removed. Dilution air was bled into the off-gas as it left the kiln to maintain the temperature at the baghouse below 250°F. Higher temperatures could damage the high temperature bags. From the baghouse, the off-gas passed through a water Venturi Scrubber and Bubble Tray Scrubber. The water in the scrubbers cooled the gas and removed some condensed oils and particulate. From the scrubbers, the off-gas passed through a 3,600 revolutions per minute (rpm) centrifugal fan, two Carbon Adsorber canisters, and out the vent stack. A throttling valve at the inlet of the fan controlled the gas flow to maintain a pre-set vacuum in the kiln.

Two major problems occurred with the demonstration system: 1) baghouse failure, and 2) lack of complete capture of PCBs and organics. When the bags in the baghouse became wet with condensed organics, the particulate that was being trapped became wet, causing the bags to plug. The system components beyond the baghouse did not stop the condensed organics and PCBs.

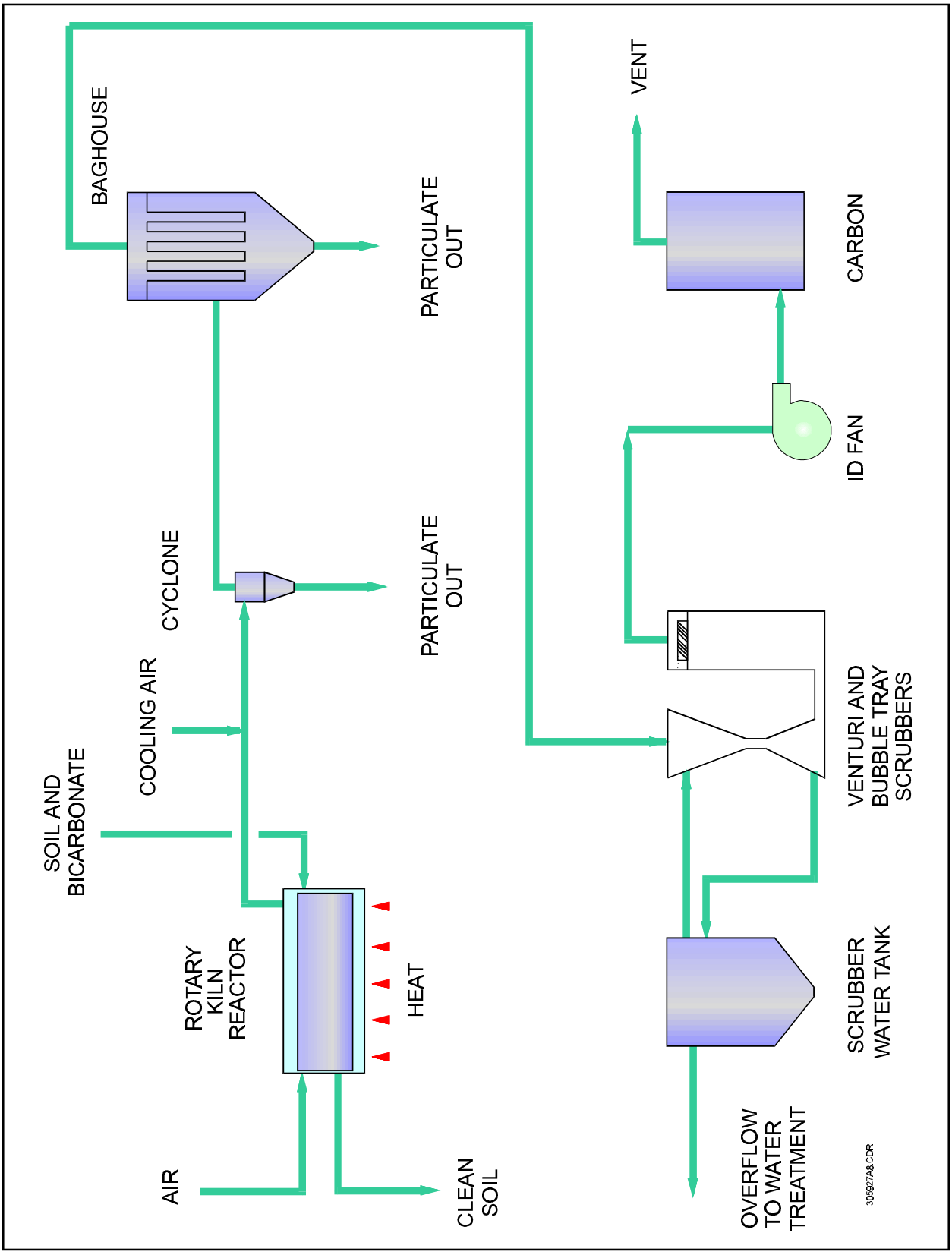

Figure 1-3
The Demonstration Plant Rotary Kiln Reactor and Air Pollution Control System

During the February 1994 hot run, oil resulting from ineffective APCS operation seeped out of the ID Fan along the drive shaft. This oil was heavier than water and contained about 1 percent PCB. This problem occurred again during another hot run in November. Once this oil appeared, it was produced at a fairly steady rate as long as the system operated. An examination of the ducts showed that the Fan inlet ducting was clean, but the outlet ducting was coated with this oil.

Oil Removed from the Off-Gas Stream Collecting on the ID Fan Housing During the Demonstration Run

These observations are best explained by the theory that the oil is being carried through the system as an aerosol. The cyclone, baghouse, and scrubber would have a very low removal efficiency on such an aerosol. When the aerosol reached the high speed fan, centrifugal forces in the fan slung the aerosol onto the fan housing and some of the submicron droplets agglomerated into droplets that were large enough to stay in the fan and build up in the housing. The large pressure drop that occurred in the throttling valve just before the fan could also cause agglomeration.

This aerosol theory is consistent with how the gas is created. In the RKR, PCBs and other organics in the soil are heated until they decompose and/or vaporize. The vapor leaves the soil and is swept into the off-gas stream. As the off-gas cools, the organic vapors condense. When dilute vapors condense, they condense into submicron particles.

Aerosol Removal. Submicron particles are difficult to remove from a gas stream. Some literature reports good removal efficiency of submicron dust particles using high energy water scrubbers. The oil generated by the RKR was not water soluble. It is doubtful that a hydrophobic material would be removed efficiently in a water scrubber. The Demonstration Plant did collect some of this heavy oil in the scrubber water, but clearly a significant amount of the oil passed through the scrubber. Oil scrubbers were suggested, but data could not be found on their effectiveness. The production system required equipment that would operate with a known efficiency.

WESPs and HEMEs will remove aerosols efficiently. This is well documented in literature [7]. In a WESP, particles are electrically charged and electrostatic forces are used to move the particle out of the gas stream.

The HEME depends on Brownian diffusion to remove submicron particles. The HEME is a thick, tightly-woven fabric that the gas passes through at a low velocity. Submicron particles continuously move around (Brownian Motion) because they are buffeted by vibrating gas molecules. As the gas moves through the HEME fabric, the particles collide and stick to the strands of fabric. As the organics build up on the fabric, they coalesce and gravity drain out of the fabric. In addition, particles larger than about 3 microns are captured by impaction.

Both the WESP and HEME have infinite turndown. As the gas flow decreases, their collection efficiency actually increases. This was an important consideration because gas flows had to be estimated during the design phase. The use of steam injection followed by condensation provided a much lower gas flow than using air as the sweep gas as was done in the demonstration phase. The gas flow using steam injection in the redesigned APCS was an estimate. Some collection equipment, like cyclones, would only operate efficiently over a small range of gas flows.

WESPs are generally not used to treat off-gas from a desorber because the organics levels can be high enough to form an explosive gas, and the high energy spark in the WESP could ignite that gas. As explained in Section 2.0, this problem was solved by inerting the system with steam. This meant, however, that the WESP had to be operated hot, so it was positioned as close as possible to the RKR. Gas leaving the WESP was around 200°F.

When the WESP off-gas was cooled, two factors contributed to additional organics being condensed. The cooling itself caused additional condensation, and the reduction in gas volume created by removing the steam also contributed to condensation. At a given temperature, the concentration of a particular organic in a gas that can remain in the vapor state is a constant (the saturation concentration). Removing the steam concentrated the organics in the remaining vapor and forced additional condensation. The gas passed through the HEME after it was chilled to remove this additional condensation.

Water Treatment Requirements. The baghouse in the demonstration system was effective at removing particulate while it operated. The design concept was good. Ideally, the particulate and

organics should be removed separately. During the demonstration runs, a heavy oil settled in the bottom of the Venturi Scrubber water recirculation tank and was collected by simply draining it off the bottom of the tank. This oil from the February 1994 hot run was 10.5 percent PCB. Oil collected during the November 1994 hot run was 16 percent PCB. These high concentration PCB residuals are ideal; the higher the concentration of residuals, the lower the volume of the residuals that must be disposed. The remaining water was relatively particulate free and could be treated by carbon to remove residual PCBs and other organics.

The redesigned system removed particulate and oil together in the water sprays in the WESP. This made the wastewater from the full-scale system much higher in suspended solids. A conventional water treatment plant was built to remove these suspended solids prior to carbon adsorption treatment.

Organics in the Off-Gas. Another important lesson learned in the demonstration system is that the off-gas contains a lot of organics that are not PCBs. The soil excavated on Guam contained naturally occurring organics, such as roots and decayed vegetation. When heated to the temperatures used in the RKR, many of these organics break down into lighter compounds, others come off and condense as heavy organics. The heavy oil collected in the scrubber water was 10 to 16 percent PCBs, so it was 84 to 90 percent non-PCB oil. The scrubber water during the hot runs developed a yellowish color and an odor, indicating that organics were carried in the water either as an emulsion or solution.

1.3.2 Rapid Start System

IT physically took over the system in December 1994. Plant operators arrived on Guam in January to begin construction on the production system. While equipment changes were being made to other parts of the plant, the new APCS was being designed. By April 1995, the APCS design was complete and the major APCS equipment was on order. Equipment delivery was controlling the schedule. Specifically, the WESP, Chiller Condenser, boiler, and Primary Condenser would not be delivered until the Fall.

The "Rapid Start System" evolved as a result of this equipment delivery delay. Also, a Feed Preparation Building was to be constructed and the area where it was to be placed was contaminated. The soil in the Feed Preparation Building area was mostly low organic coral with low levels of contamination (50 to 100 ppm PCB). The soil under the Feed Preparation Building would have to be exca-

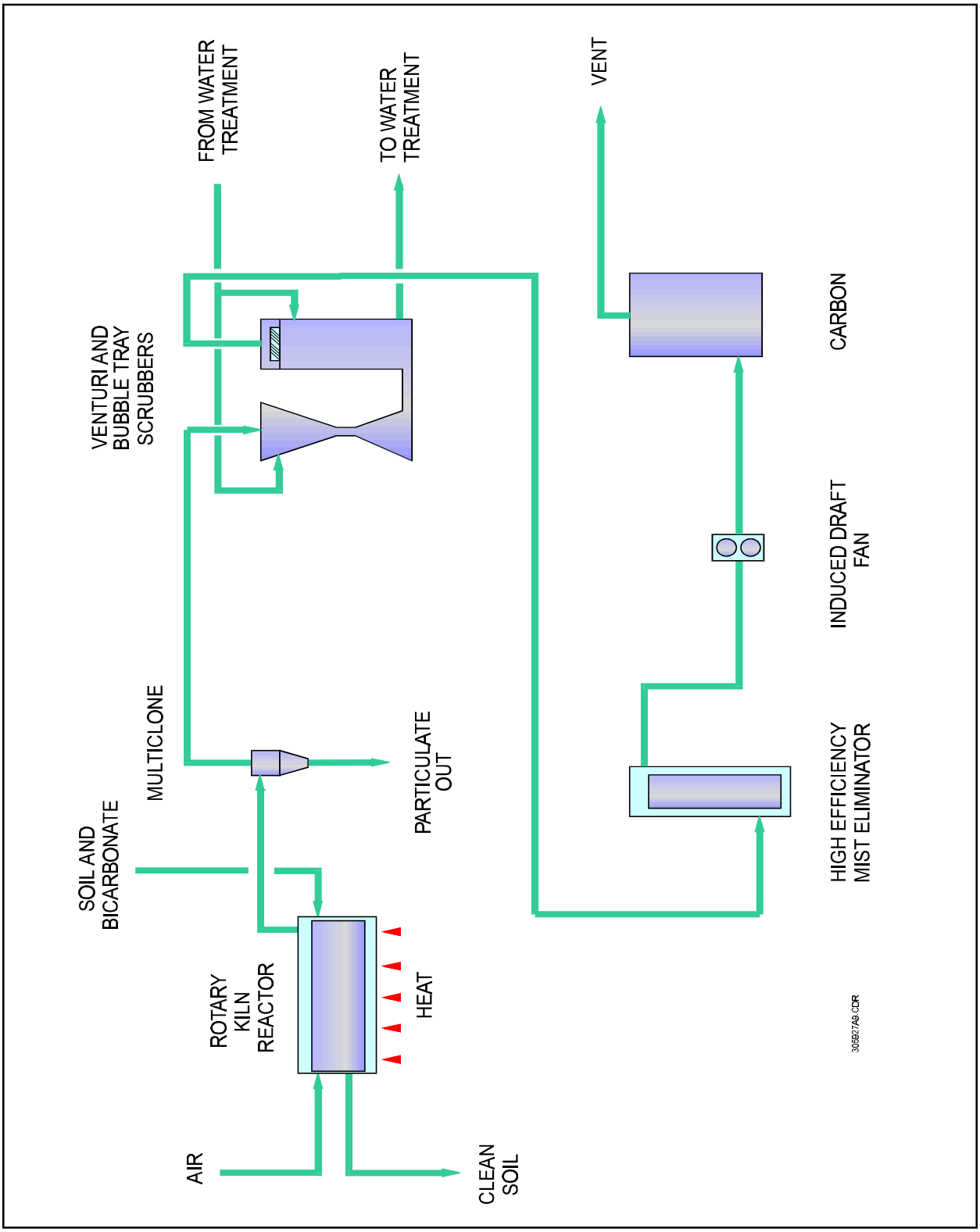

Figure 1-4
The BCDP Rapid Start System

1.3.3 Full Scale Remediation

When the rapid start runs ended, work began on the installation of the remaining APCS equipment. Between September and January 1996, the remaining equipment and the Feed Preparation Building was installed. The system operated for short periods in February and March as operating changes were made and additional construction occurred. During this start-up period, additional equipment modifications were made. At times, the rapid start configuration was used because of difficulties in starting up the WESP.

By April, the full-scale system was operating. Operation continued until the site was remediated. The Navy conducted a second stack test in early June showing that PCB DRE was 7 nines and the dioxin furan TEQ was 0.18 nanograms per cubic meter.

2.0 BCDP Production Plant Description

The physical plant is described in this section. Plant drawings found in Appendix A will be useful when reading this section.

2.1 Plant Description

The plot plan can be found in Appendix A. The haul road for contaminated material runs south of the Feed Preparation Building. Excavated soil is stockpiled on the west side of the building. This provides a storage area and a place to dry wet soil. Wet soil is spread out over the area and tilled to dry in the sun if necessary. Soil that is dry enough to crush is carried through the 12-foot-by-13-foot high door on the southeast corner of the Feed Preparation Building and loaded onto the crusher. A concrete loading ramp was constructed near the crusher to allow the front-end loader to reach high enough to load the crusher.

Dry, crushed material is stockpiled inside the Feed Preparation Building. Surplus steel plate was available from the Navy and was used to set up barriers to reinforce the wall around the areas where the crushed material was stored. This allowed the material to be pushed up against the barriers and significantly increased the stockpile area within the building.

About 400 cubic yards of material could be stored in the building. The building was not used to dry the soil, but to keep dry soil out of the rain. From the stockpile area, the soil was loaded into the reactor feed conveyor hopper. This hopper holds about five tons of soil.

This Photo Shows the Interior of the Feed Preparation Building; the Crusher Discharge Conveyor and Soil Stockpile are Shown at the Left and Center of the Photo; the RKR Feed Hopper is in the Right Rear Corner of the Feed Preparation Building

The Feed Preparation Building is the only Level C operating area in the plant. Two cameras located inside the building allowed a control room operator to view activities inside the building. One

camera located in the southeast corner of the building was capable of panning and zooming. This camera was used to monitor anyone working inside the building. Normally, two operators would be required inside the building for safety reasons. By using this camera, it was acceptable to have only one operator at a time dressed in Level C working inside the building. The second camera was located over the reactor feed conveyor hopper. With this camera, it was possible to see the hopper and the belt from the control room. This allowed the control room operator to judge the amount of material remaining in the hopper as well as spot a hopper pluggage that would stop material from being dropped onto the feed belt.

Normally, a Feed Preparation Building would have a ventilation system producing four to five air volume changes per hour. The air exhausting from the building would pass through a baghouse prior to discharge. This ventilation system is to protect the operators as well as prevent contaminated material from blowing out of the building. At this site, the soil was not dusty and personnel monitors worn by operators inside the building showed that OSHA PCB levels were not exceeded during work in the building. For that reason a building ventilation system was not installed.

The Navy had an active training center on the west side of the fence that marked the boundary of the excavated soil staging area. Air monitoring was performed at this fence line. A high volume air sampler was run daily to check for dust and a polyurethane foam (PUF) sampler was periodically run to check for PCBs. The PUF was operated less frequently because the on-site laboratory was not staffed to do daily PUF samples. As a backup, the dust samples collected by the high volume sampler were analyzed for PCBs. No PCB air excursions were ever recorded.

The RKR as Viewed from the Soil Discharge End. The Transformer Rectifier, Bus Duct, and WESP are to the Right of the RKR

The reactor feed conveyor carries the soil from the feed conveyor hopper to the inlet valves of the RKR. Sodium bicarbonate was added directly to the soil traveling up the belt. The bicarbonate feeder

was housed in a building large enough to hold a one ton bicarbonate tote bag over the feed hopper. A screw conveyor carried the bicarbonate to the top of the reactor feed conveyor. The bicarbonate addition rate was measured by catching the bicarbonate discharge in a bucket over a time interval and weighing the amount caught. The bicarbonate and soil were mixed inside the RKR.

The RKR conveyed the soil from the feed end to the discharge end of the reactor while heating it to temperatures over 700°F. Soil discharged at the south end of the RKR onto the reactor product conveyor.

The reactor product conveyor carried the soil from the RKR to one of three reactor product or ash bins. Bins A and B were capable of holding about 24 tons of material and Bin C would hold almost 50 tons of reactor product. A sample of the product coming off the belt was taken every four hours while the system was operating. When a product bin was full and the conveyor was moved to the next bin, these samples were composited and crushed to facilitate analysis. The composite sample was then analyzed to determine whether or not the material in the bin met the cleanup limit of two ppm maximum per PCB congener. The product bins were constructed out of concrete "K" barriers. These are the barriers that are normally used as road dividers or blockades during road construction. The 50-ton bin was used for weekend operation so the chemist could have a day off.

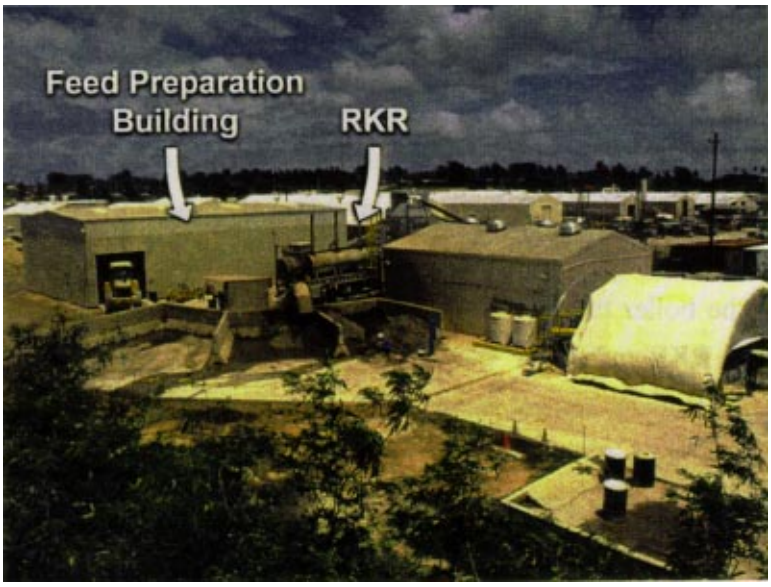

Plant Overview Showing the Three Reactor Product Storage Bins, Feed Preparation Building, and RKR

The ash was bone dry and very dusty. Water sprays were mounted at the discharge of the product conveyor to wet the material as it came off the belt. The water sprays were not completely effective because the first water to hit the hot dry product instantly boiled. This rapid evaporation and generation of steam blew dust off the belt. Enough water was added, however, to ensure that the

material in the ash bins was wet and no further dusting occurred after the material landed in the ash bin.

There was continual water runoff from the ash bins. Since the material in the bins was clean, the only contaminant carried by the water was suspended solids. The ash bins were sloped so that the water traveled into the ditch where a dam was built to contain the water while it evaporated and soaked into the soil. This area of the ditch where the water drained was remediated by the end of the project.

The control room was a 20-foot connex box located at the north end of the RKR. Temperatures and pressures throughout the system were monitored from the control room computer and some of the key operating parameters could be manipulated from the control room. Key control points were set to alarm if operating conditions exceeded limits. The alarm was both audible (with a buzzer) and visual. Red and yellow lights mounted on top of the diesel fuel storage tanks flashed to indicate an RKR burner problem (yellow), or a problem elsewhere in the BCDP (red).

The boiler that provided steam for the RKR and WESP was placed just west of the control room. A large shed north of the boiler was used to store sample jars and samples, as well as to provide a work area for minor maintenance. The shed contained a refrigerator for sample storage and a decontamination boot wash area. Protective clothing was also stored here. A similar shed was provided just west of ash Bin C. Operators working in the Feed Preparation Building changed from Level D to Level C clothing in this shed.

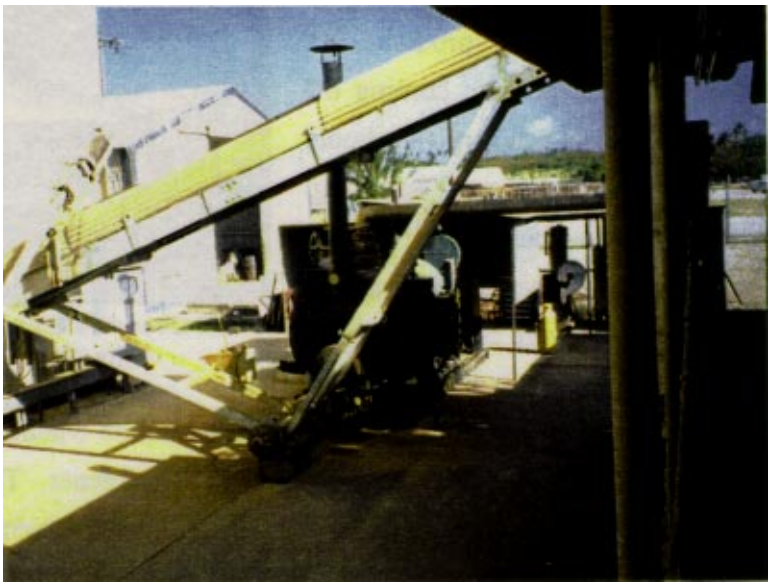

The Boiler Used to Provide Steam to the RKR and WESP

Off-gas from the RKR traveled through the cyclone, where dust was removed, and then into a quench section at the inlet of the WESP. In the quench, gas was cooled to slightly below 212°F and

water saturated. The water saturated gas traveled through the WESP where particulate and condensed organic aerosols were removed.

From the WESP, the gas was ducted to the Primary Condenser in the air pollution control (APC) building. Almost all the steam was condensed in the Primary Condenser. The gas exited the Primary Condenser and traveled through the Venturi Scrubber. The Scrubber was not operated during the full-scale system, but gas traveled through it because that is the way the piping was routed; the Venturi Scrubber had been used earlier during the rapid start, and was left in place to spare the labor cost of removing it.

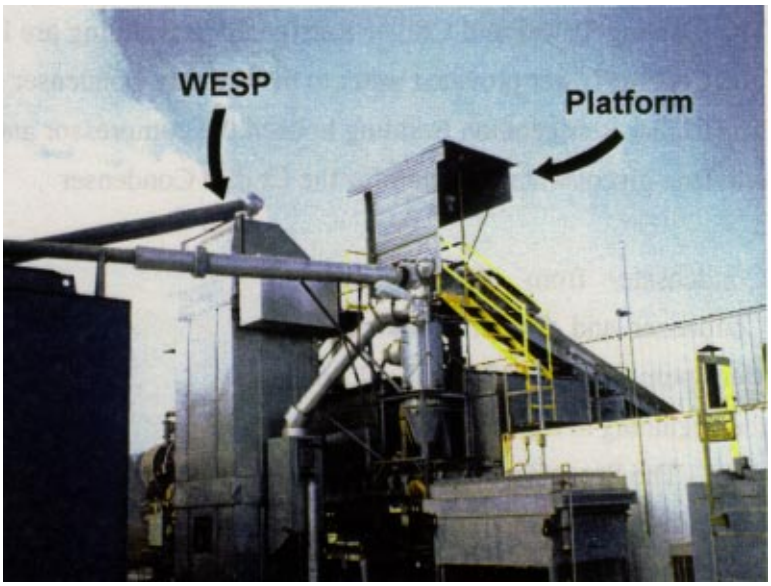

The Multiclone and WESP at the Soil Feed End of the RKR; Note the Covered Platform Built Above the Reactor Feed Valves to Allow Easy Access for Removing Plugs

From the Venturi Scrubber, the gas went through the Chiller Condenser where it was cooled down to 40 to 50°F. From the Chiller Condenser, the gas passed through one of two parallel HEMEs. These HEMEs removed virtually all of any remaining particulate and condensed organics.

APCS Equipment Inside the APC Building; From Left to Right, the Photo Shows the Primary Condenser, Venturi and Bubble Tray Scrubbers, Chiller Condenser, and HEMEs; Note the Open Roof Hatch Over the HEMEs Through Which the HEME Elements are Removed

From the HEME, the gas exited the APC building and passed into the ID Fan. This Fan provided the driving force for pulling the gas

from the reactor to this point. From the ID Fan, the gas was forced through two air carbon adsorption units in series and then exited the vent pipe to the atmosphere.

The Cooling Tower and Chiller Refrigeration Building are located just north of the APC building. The Cooling Tower provided water to the Primary Condenser and the Chiller Refrigeration Building. The Chiller Refrigeration Building housed the compressor and heat exchangers that produced a cold ethylene glycol/water solution for the Chiller Condenser.

Condensate from the Primary Condenser and Chiller Condenser were pumped to the Surge Tank at the beginning of the water treatment plant. The Surge Tank is set on the east side of the APC building. All other contaminated water, including water from the decontamination pad, washdown water, and potentially contaminated storm water, were also pumped to the Surge Tank. The Surge Tank was covered with a steel frame and canvas building to exclude rain water.

The ID Fan is Shown on the Right, Discharging into the Two Carbon Beds Shown on the Left; Fan Suction Piping Coming from the HEMEs Exits Through the Building Wall

From the Surge Tank, the water was pumped back into the APC building to a flocculation system where it was rapid mixed with polymer and then introduced into the flocculation tank. The flocculated water overflowed from the flock tank to the clarifier. The clarifier was set in the Surge Tank to provide secondary containment for the clarifier.

Clarified water overflowed back into the APC building to the clarified water tank. This tank provided process water for the plant. Water was recirculated from the clarified water tank to the WESP quench. A smaller flow was taken from the clarified water tank and passed through bag filters, Oleophilic Media drums to absorb oils, and then through water carbon treatment to remove

soluble organics and residual PCBs. Oleophilic Media is a mixture of clay and anthracite that absorbs oil. This material will not only remove free oil, it will break oil out of emulsions.

This water then discharged into the treated water tank. Make-up water was also added to the treated water tank as needed. This water was used to spray the reactor product conveyor belt and cool the reactor product.

2.2 Solids Handling Equipment

The solids handling equipment consisted of the crusher, reactor feed conveyor, bicarbonate feed system, and the RKR.

2.2.1 Rock Crusher

The soil was crushed in a crushing plant to a nominal 1.5-inch size. The crusher is rated for up to 20 tph. Since the RKR runs at about two tph maximum, crushing was done in batches as required. Crushing was necessary to improve the heat exchange within the RKR and to facilitate processing the material through the equipment. If particles were too large, they would not have enough residence time to heat thoroughly in the RKR.

Feed to the crusher was through a 12-inch hydraulically operated grizzly located on top of the crusher feed hopper. Originally, the grizzly was 6 inches, and was modified to have 12-inch openings. This grizzly removed large boulders and debris that might otherwise enter and damage or plug the crusher. Rotating, hardened, manganese steel hammers crushed the material. Crushed soil fell through openings in the discharge chute to the discharge conveyor which carried the material from the crusher to the stockpile. The crusher was powered by a diesel engine. Diesel exhaust was piped to the outside of the Feed Preparation Building.

The crusher was built as an asphalt crusher. Although there were some concerns about its durability at the beginning of the project, it worked as designed without excessive maintenance. If there was excessive moisture in the soil, it would pack up inside the crusher and plug, so crushing operations were only conducted on soil that was dry enough to process. Although the intent was to crush everything down to a 1.5-inch size, there were two and three inch rocks that passed through the crusher. Fortunately, this larger material did not cause any major materials handling problem for the rest of the equipment within the treatment train.

2.2.2 Reactor Feed Conveyor

The reactor feed conveyor moved the material from the Feed Preparation Building to the RKR inlet, located about 15 feet above the ground. The reactor feed conveyor hopper held about five tons of soil and was loaded with a front-end loader as necessary.

Material from the hopper fell on a short, horizontal conveyor belt. The speed of this conveyor was controlled automatically to deliver the set point feed rate to the 60 foot long main conveyor. The main conveyor belt speed was not adjustable.

The feed conveyor had a weigh belt section that recorded the amount of material passing along the belt. This was used to keep track of production.

The reactor feed conveyor operated well as long as the feed was relatively dry. If the feed material was too wet, it would bridge and fail to flow into the hopper and had to be manually freed.

2.2.3 Bicarbonate Feed System

Sodium bicarbonate was received at the site in one-ton tote bags. These were taken as needed to the bicarbonate feed building where they were hung by a hoist above the bicarbonate feed hopper. The bags were dumped into the hopper as needed to keep material in the hopper. A screw conveyor on a variable speed drive conveyed the bicarbonate from the feed building to the reactor feed conveyor. The bicarbonate flow rate was calibrated by using a bucket and stop-watch and catching material as it fell out of the screw conveyor onto the belt.

Sodium bicarbonate is hygroscopic and the humid air on Guam caused the material to cake up in the tote bags. Problems were experienced with the screw conveyor which would occasionally jam and even break.

2.2.4 Rotary Kiln Reactor

The RKR is a calciner with a nameplate rating of two tph. The purpose of the RKR is to heat the soil and bicarbonate to a high enough temperature (about 700°F) and a long enough residence time (approximately one hour) to decompose and drive off PCBs and create a soil product that would pass the two ppm per PCB congener treatment standard.

The interior of the reactor was a rotating carbon steel shell 30 feet long and 3 feet in diameter. Soil entered at one end of this shell and traveled through the rotating shell to the soil discharge end of the reactor while being heated. The furnace around the shell was a stationary refractory with 14 diesel fuel burners firing tangentially around the shell. The burners are spark ignited using a propane pilot gas and are divided into four separate zones along the shell corresponding to the four stacks coming out of the top of the reactor. These four zones each had an individual thermocouple going through the side of the refractory to measure the gas temperature between the refractory and the shell. Since the reactor shell is carbon steel, it cannot be heated much above 1,000°F, and these thermocouples indicate the maximum shell temperature while the reactor is running. Combined, the burners were rated at 7 million British thermal units (Btu) per hour.

The reactor shell was normally driven by an electric motor. A propane motor was used if the electric drive failed. At operating temperature, the steel shell was weak, and if rotation stopped while the shell was at temperature, it would sag.

Soil enters the reactor through two 10-inch knife gate valves that provide a seal at the entry point. Only one valve is open at a time. In the cycle, the top knife gate opens and soil falls into the feed pipe and settles on the bottom knife gate valve. After about 20 seconds, the top knife gate closes and the bottom knife gate opens, allowing the soil to flow down into the reactor. Soil feed from the feed conveyor is continuous and while the top knife gate is closed, soil accumulates on top of the valve. Two knife gates at the soil discharge end operate in the same fashion.

The soil feed knife gates would plug if the soil was too wet because the soil would pack as it fell on a closed valve. When the valve opened, the soil would bridge and not drop through the open valve. An operator had to climb up to the valve and manually unblock the jam. A platform with access ladders was built around the feed valve to allow easy access to the jam point.

A seal is also required where the rotating shell contacts the stationary feed and discharge breaches of the reactor. The seal at this point is complicated by the fact that the shell actually increases in length by an inch or two when it heats up due to thermal expansion. As the shell expands, it does so against a spring loaded bellows which moves back as the shell presses into it. A rotating flange on the shell makes direct contact with a stationary flange on the end of the bellows. To minimize wear, high temperature grease is pressure injected between these two flanges periodically as the kiln operates.

The rate at which soil is conveyed down the shell is determined by kiln rotation and slope. The kiln typically rotated between one and two rpm and was sloped about three degrees downward from the feed end to the discharge end. The slope of the kiln was difficult to change because of piping that had been attached to the unit. The rotation rate was used to control soil residence time inside the kiln. Horizontal flights extending out from the kiln shell inside wall about one inch provided some lift and agitation to the material in the shell.

A sweep gas is necessary to remove the gaseous contaminants driven off the soil in the kiln. During the demonstration runs, this sweep gas was diesel exhaust which was piped from the exhaust stack closest to the soil discharge end of the reactor into the shell itself. During the production runs, this diesel exhaust sweep gas was replaced by steam which was injected into the soil discharge end of the reactor through a flow control valve. This control valve allowed the sweep gas flow rate to be set independently of the vacuum inside the kiln.

During the demonstration runs, the soil would drop out into the feed breach section of the kiln and accumulate. This accumulation was a combination of feed soil which spilled back over the dam on the rotating shell at high feed rates and fines which fell out as the exhaust gas was pulled out of the feed end of the kiln. This material would accumulate and pack up around the rotating shell, which extended into the stationary breach, and eventually built up enough friction to hinder the rotation of the shell. The breech drop is shown in Figure 2-1.

A 10-inch knife gate and chute were installed at the bottom of the feed breach section of the kiln to drop this material out and keep the breach area clean. A vibrator was also mounted on the side of the breach. The material dropped into a 55-gallon drum through a bellows pipe. The knife gate valve was normally open and was only closed to isolate the kiln while the drum of collected material was changed out with an empty drum. The material collected at this point was higher in feed soil than in fines. These drums were carried back to the Feed Preparation Building where the collected material was recycled to the kiln.

2.3 Air Pollution Control System Design Basis

The APCS was redesigned between the demonstration and full-scale runs. The APC equipment that was used during the demonstration run was not used during the full-scale production runs. The steam injection system had never been used before and the amount of air infiltration that would occur throughout the system was unknown during the design of the new APC equipment. Estimates of

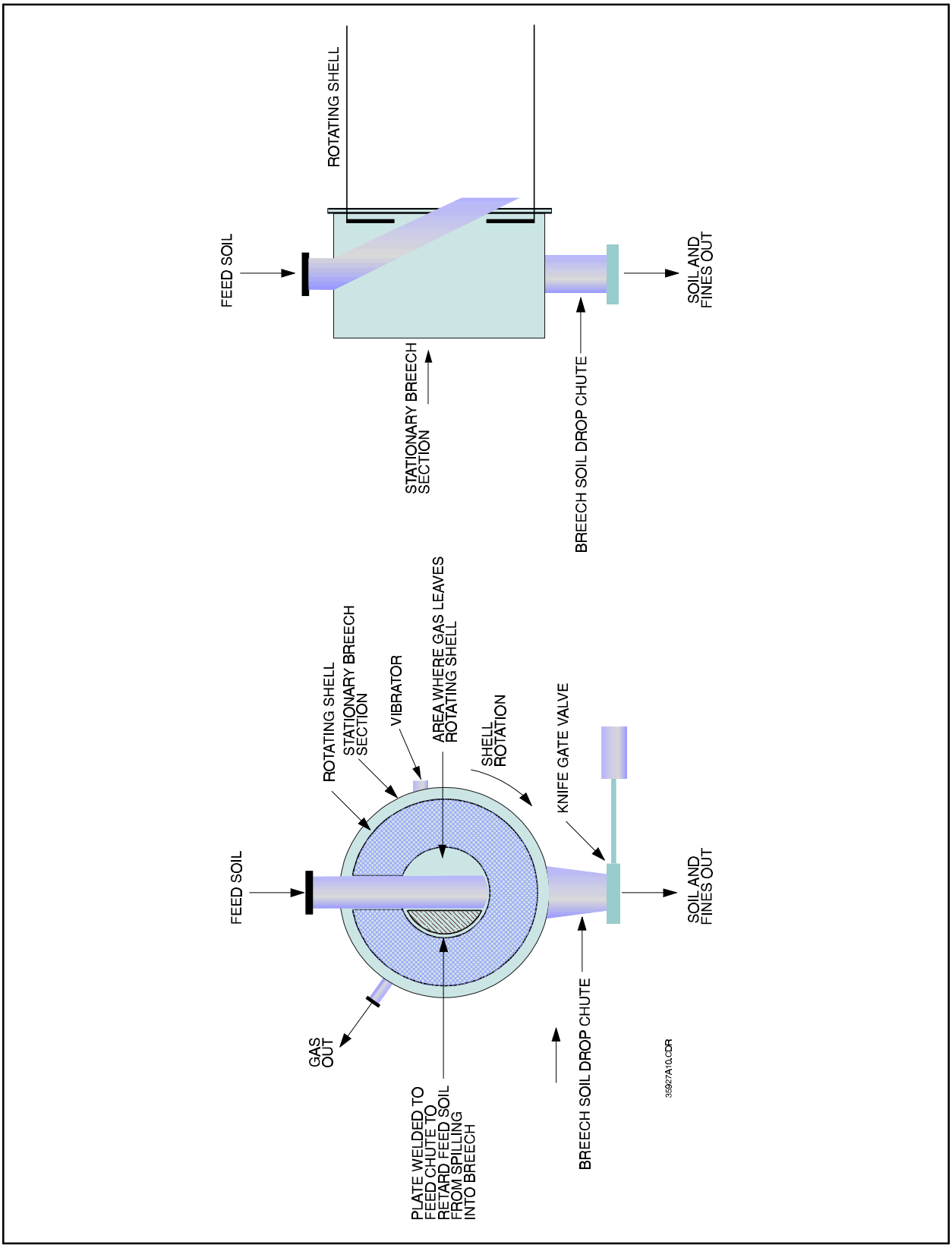

Figure 2-1
RKR Breach Fines Drop

infiltrated air turned out to be very conservative and actual gas flow rates were much lower than had been projected. This should be kept in mind when comparing the actual operating conditions of the APC equipment with the size of the equipment itself.

The design of the APCS involved several new concepts. The objective was to create a system that had state-of-the-art contaminant removal efficiency and would be environmentally safe to operate over the extended remediation time period.

Prior to the BCDP system, incinerators set the standard for removal efficiency for thermally processing contaminated soil. The BCDP's emissions are lower than the levels allowed by hazardous waste incinerator air emission standards for PCBs, dioxins and furans, metals, and particulates.

Incinerators are subject to upset conditions if the organics being driven off the soil are inadvertently ignited. This sometimes happens and creates a positive pressure in the unit that can cause contaminants to leak out. In the BCDP, the oxygen level was kept sufficiently low throughout the entire system that ignition could not occur.

The combined benefits of high removal efficiency and inert (nonflammable) conditions in the RKR and APCS are achieved by the use of steam. Steam is used in the hot end of the system as a carrier for the contaminants and to displace oxygen. The steam condenses as the gas is cooled. With the steam removed, the remaining contaminants are concentrated into a low volume of dry gases. This low gas flow concentrates the high molecular weight contaminants (PCBs) and allows them to further condense and be economically removed and disposed.

2.3.1 Organics Removal Mechanism

The design of the APCS is based on organics removal by two independent pathways: condensation and water solubility. The exact composition and concentrations of the organics in the off-gas vary depending on the feed soil composition, the operating temperatures in the kiln, and the amount of oxygen (i.e., air) that infiltrates into the kiln. Based on the available literature as well as our experience on Guam, when naturally occurring organics are heated to the point of decomposition (pyrolysis), a wide range of organic compounds will form. The analysis is therefore performed by examining the fate of a range of organics that are similar to those that would be expected in the off-gas stream.

Organics in the off-gas of the BCDP system can be grouped as follows:

1. Volatile, nonsoluble gases (such as methane)
2. Volatile, soluble gases (such as acetone)
3. Semivolatile, soluble compounds (such as phenol)
4. Semivolatile, nonsoluble compounds (such as anthracene).

PCBs fall into the fourth category; removal of these compounds is the main goal of the APCS.

Compounds in the first category can only be captured, if at all, by the Carbon Adsorber, and are not considered further in this evaluation. The other three classes of compounds will be analyzed using the compounds listed above as examples. Although phenol and anthracene are both classed as semivolatiles, the phenol is much more volatile than the anthracene, and the analysis evaluates the effect of volatility on capture.

Organics leave the RKR as a vapor and are continuously cooled from the time they leave the reactor until they contact the ID Fan. Some organic vapors will reach their saturation point and condense to aerosol liquids as they cool down. These condensed organics can be removed by the WESP, Primary Condenser, and HEME. The calculations assume that the organics start condensing at their dew point (i.e., supersaturation does not occur) and, once condensed, they are available for removal in this equipment.

The other removal mechanism is by the organics dissolving into the condensate generated in the Primary Condenser. Water soluble organic vapors as well as liquids can be removed by solubilization into the condensate.

The specific organics that are evaluated are intended to be representative of the organics that will be found in the off-gas. Thus, even though phenol and acetone are water soluble and will be removed in the scrubber water, their removal by condensation only is discussed. In this context, these compounds are intended to represent non-water soluble compounds with similar molecular weights and vapor pressures.

Table 2-1 provides some information about the compounds to be evaluated. They have molecular weights ranging from 58 to 352, melting points from -140°F to over 420°F, and boiling points between 133°F and 750°F.

Table 2-1 Example Organics to be Evlauated			
Compound	Molecular Weight	°F	
		Melting Point	Boiling Point
Acetone	58	-140	133
Phenol	94	109	358
Naphthalene	128	178	425
Anthracene	178	420	644
Aroclor 1260	352		750

Table 2-2 shows the vapor pressure of the compounds.

Table 2-2 Vapor Pressure, psia, at Temperature, °F					
Pounds Per Square Inch Absolute (psia)	Acetone	Phenol	Anthracene	Naphthalene	Aroclor 1260
1.74E-06					68
0.019	-74	104	293	127	
0.097	-40	144	343	166	
0.193	-23	164	368	186	
0.387	-5	186	395	215	
0.773	15	212	423	247	
1.160	28	227	449	266	
1.934	45	250	482	294	
3.867	72	282	534	334	
7.735	103	320	590	380	
14.696	133	359	647	424	752

To allow the calculation of vapor pressure at other temperatures, a linear regression of natural logarithm (Ln) of the vapor pressure (VP) versus the reciprocal of the temperature (T), degrees Kelvin, is performed. The regression is to find the constants in the equation Ln (VP) = a/T + b. The equations to predict the vapor pressure in pounds per square inch absolute (psia) based on temperature in °F are shown below:

- Acetone $p = \exp(-7245.33*(1/(T+460)) + 14.95)$
- Phenol $p = \exp(-11945.1*(1/(T+460)) + 17.42)$
- Naphthalene $p = \exp(-11155.8*(1/(T+460)) + 15.43)$
- Anthracene $p = \exp(-15291.8*(1/(T+460)) + 16.75)$
- Aroclor 1260 $p = \exp(-14921.6*(1/(T+460)) + 15.00)$

The vapor pressures together with the temperature, flow rate, and composition of the gas at the removal points in the APCS will allow a prediction of the removal that occurs at the points in question. The conditions at the removal points are shown in Table 2-3.

Table 2-3
Conditions at Removal Points

Location	Temperature (°F)	Weight Fraction Water	Mole Fraction Water	Total Gas Flow (pounds/hour)
HEME	40	0.005	0.00803	131
Condenser	100	0.0663	0.10266	140
WESP	200	0.754	0.83160	900

Two removal mechanisms are evaluated. Condensed vapors existing as micron and submicron aerosols can be removed as a liquid in the WESP and HEME. The other removal method is by dissolving in water. When water soluble organic vapor comes in contact with water it will move to reach an equilibrium with the water. The portion that dissolves in the water will be removed in the water stream. These removal mechanisms will be considered separately.

2.3.1.1 Removal by Condensation

This model assumes that 100 percent of the condensed material at the WESP and HEME will be removed. Some removal of organic droplets will occur in the Primary Condenser, but most of the removal here will be due to water soluble organics solubilizing into water.

This model considers each compound independently. In the actual system, many organic compounds are present together. The interaction of these different compounds should increase the rate of removal. Uncondensed organic vapors are soluble in the condensed organics. In addition, the presence of other organics may act to lower the dew point of individual organics. Actually quantifying these effects is difficult, but they will act to make the actual removal better than that which is predicted by this model.

The other assumption is that the organics condense at their dew point and do not supersaturate. If supersaturation occurs, the actual removal will be less than predicted.

The calculation method will be illustrated by using acetone at the HEME as an example. Remember that although acetone is water soluble, in this example it is used to represent removal by condensation only. The HEME operates at 40°F, and the vapor pressure at that temperature is calculated from the regression equation.

$$\text{Vapor Pressure} = \exp(-7245.33*(1/(40+460)) + 14.9496)$$
$$= 1.583 \text{ psia}$$

The mole fraction of acetone in the vapor is the ratio of the vapor pressure of the acetone to the total system pressure. System pressure will be taken as atmospheric. The mole fraction of a gas is also the same as the volume fraction. At 40°F, the volume fraction of acetone in the vapor is:

$$1.583/14.696 = 0.108$$

To calculate the weight fraction and the total pounds per hour of the acetone in the vapor, the gas is assumed to consist of water vapor, acetone, and air.

From a psychometric chart or vapor pressure table, the weight fraction of water in saturated air at 40 degrees is 0.005.

Basis: 100 pounds of gas:

Pounds of water = 0.5
Pounds of air = 100 - 0.5 = 99.5

Moles of water = 0.5/18 = 0.0278
Moles of air = 99.5/29 = 3.4310

Mole fraction of water = 0.0278/(0.0278+3.4310) = 0.00804

The molecular weight of water is 18, air is 29, and acetone is 58. The weight fraction of acetone in the vapor at the HEME is calculated as follows:

Basis: 100 moles

100 * 0.1077 = 10.77 moles of acetone
100 - 10.77 = 89.23 moles of water and air
89.23 * (1 - 0.00804) = 88.5125908 moles of air
89.23 * 0.00804 = 0.7174092 moles of water

Pounds of acetone = 10.77 * 58 = 625 pounds
Pounds of gas = 0.717 * 18 + 88.513 * 29 = 2,580 pounds

Total weight of 100 moles of gas at the HEME is 2580 + 625 = 3205 pounds. The weight fraction of acetone in the saturated gas at the HEME is thus:

625/3205 = 0.195

If the gas leaving the HEME is saturated, the amount of acetone that can be carried in this stream is:

131 * 0.195 = 25.5 pounds/hour

The results are summarized in Table 2-4.

Table 2-4
Analysis of Acetone in the Gas Stream

°F	Vapor Pressure (psia)	Volume Fraction in Vapor	Weight Fraction in Vapor	Gas Flow (pounds/hour)	Acetone (pounds/hour)
40	1.583	0.108	0.195	131	25.5
100	7.475	0.509	0.683	140	95.6
200	53.086			900	900

As shown in Table 2-4, 25.5 pounds per hour of acetone will be carried past the HEME if the gas is saturated with acetone. The removal of acetone by condensation at this point will occur only if the mass flow of acetone exceeds 25.5 pounds per hour. At the Primary Condenser, 95.6 pounds per

hour of acetone can be carried by the saturated vapor. The WESP at 200 degrees is above the boiling point of acetone, and removal by condensation will not occur.

Table 2-5 shows the results of the same calculation procedure for the organic compounds being considered. Table 2-5 shows the pounds per hour of each compound that can be carried past the removal point as a saturated vapor.

Table 2-5
Summary of the Saturated Flow Rate of Target Compounds at Different Temperatures

°F	Acetone (pounds/hour)	Phenol (pounds/hour)	Naphthalene (pounds/hour)	Anthracene (pounds/hour)	Aroclor 1260 (pounds/hour)
40	25.5	0.045	0.060	5.4E-05	3.9E-05
100	95.6	0.64	0.49	1.6E-03	1.06E-3
200	900	81	0.90	0.54	0.54

As an example, assume that the plant is running at 3,000 pounds per hour of soil. If the soil contains 1,000 ppm PCB, then the amount of PCBs that can be driven off the soil is:

$$3{,}000 * 1{,}000/1{,}000{,}000 = 3 \text{ pounds/hour}$$

At the WESP, 0.54 pounds per hour of PCBs can pass in the saturated gas. The amount that would be removed at the WESP would be:

$$3 - 0.54 = 2.46 \text{ pounds/hour}$$

Thus, 82 percent of the PCBs would be removed at the WESP. Table 2-6 shows the removal efficiency at the WESP for different concentrations of PCBs in the soil.

Table 2-6 Removal Efficiency at the WESP as a Function of the PCB Concentration in the Soil				
Soil (ppm PCB)	Total pounds/hour, PCB	Pounds/Hour Passing WESP	Pounds/Hour Removed in WESP	Percent Removal
100	0.30	0.54	0.0	0.0
1,000	3	0.54	2.46	82
1,500	4.5	0.54	3.96	88
2,000	6	0.54	5.46	91
3,000	9	0.54	8.46	94
4,000	12	0.54	11.46	96
5,000	15	0.54	14.46	96
6,000	18	0.54	17.46	97

As Table 2-6 shows, the WESP will not remove any PCBs if the concentration in the soil is low, such as 100 ppm or less. As the level of PCBs increases, the WESP becomes more important in removing the PCBs. This same trend will exist for other low volatility organics.

Table 2-5 shows that only 0.000039 pounds per hour of PCB can pass the HEME in the saturated gas. Using the example of 3,000 pounds per hour of soil feed to the plant, the removal efficiency at the HEME as a function of PCB concentration in the soil is shown in Table 2-7.

Table 2-7 Removal Efficiency at the HEME as a Function of the PCB Concentration in the Soil				
Soil (ppm PCB)	Total Pounds/Hour PCB	Pounds/Hour Passing HEME	Pounds/Hour Removed in HEME	Percent Removal
500	1.5	0.000039	1.49996	99.9974
1,000	3.0	0.000039	2.99996	99.9987
1,500	4.5	0.000039	4.49996	99.9991
2,000	6.0	0.000039	5.99996	99.9994
3,000	9.0	0.000039	8.99996	99.9996
4,000	12.0	0.000039	11.99996	99.9997
5,000	15.0	0.000039	14.99996	99.9997
6,000	18.0	0.000039	17.99996	99.9998

The HEME will achieve 4 to 5 nines removal of PCBs. As the feed becomes more contaminated, the removal efficiency increases. Of course, with the WESP in the system before the HEME, the HEME will see at most 0.54 pounds per hour of PCBs. The overall removal, however, with or without the WESP, will be the numbers shown in Table 2-7.

In summary, the WESP will take out high concentrations of low volatile organics as well as almost all the dust in the off-gas. Because of the high temperature in the WESP, the condensed organics will have a relatively high boiling point. These are exactly the organics that would tend to plug the HEME. The WESP operates at a much higher temperature than the HEME and is continuously flushed with water. It is thus better able to handle viscous organics as well as dust. Handling high concentrations of heavy organics at the higher temperatures in the WESP also has the advantage that the viscosity of organics decreases with temperature. The organics will be more flowable at the WESP temperatures than at the HEME temperatures.

The HEME depends on the organics being flowable and able to drain down through the filter pad. If organics that are too viscous to flow at 40°F are trapped by the HEME, the HEME element will plug and have to be replaced. In general, high viscosity organics tend to have low volatility. If any dust flows into the HEME, it will be trapped in the fabric and will not drain. The WESP thus acts to protect the HEME by removing high concentrations of viscous organics and solid particulate.

Organics are generally soluble in other organics. The more volatile (less viscous) organics that are preferentially condensed in the HEME should act as a carrier for the heavier organics that accumulate there, thus promoting drainage from the unit.

The air capture system was designed to achieve 4 to 5 nines removal at the HEME. After the HEME, the gas passes through carbon for a final polish. Because of the very low levels of PCBs in the gas entering the carbon, very little carbon is saturated with PCBs, providing the carbon with a long service life.

The HEME provides a barrier to prevent PCBs from escaping if the WESP should lose power. The system will operate at almost the same efficiency without the WESP. HEMEs will plug and have to be replaced if the WESP is not operating, but operating experience on Guam showed that the life of a HEME is measured in weeks without the WESP. Two HEMEs were operated in parallel. When

the pressure drop became excessive in one HEME, the gas was manually valved to the second HEME and the plugged HEME was replaced.

2.3.1.2 Removal by Dissolving in Water

Many organic compounds, especially naturally occurring compounds, are water soluble. Phenol and acetone are two examples.

The phenol and acetone will try to reach an equilibrium in the Primary Condenser water. As before, these compounds will be used as examples to allow a generalization about the removal of soluble compounds in the APCS. Both the quench and WESP are flooded with water, but the Primary Condenser is the lowest temperature point where the gas contacts water, thus Primary Condenser operating conditions will set the removal efficiency.

Phenol will be used as an example. Phenol is soluble in water up to about 8 percent. When phenol is dissolved in water, it will exert an equilibrium vapor pressure that is equal to the mole fraction of phenol in the water times the vapor pressure of the phenol.

Sample Calculation:

Assume the scrubber water contains 2 percent phenol by weight.
The mole fraction of phenol in the water is:

Basis:

100 pounds, 98 pounds water and 2 pounds phenol

Moles water = 98/18 = 5.44 moles
Moles phenol = 2/94 = 0.0213 moles
Mole fraction phenol = 0.0213/(5.44 + 0.0213) = 0.0039

The vapor pressure of the phenol at 100°F (the temperature of the Primary Condenser water) is 0.02 psia. The equilibrium vapor pressure is the mole fraction times the vapor pressure:

At 100°F: 0.0039 * 0.02 = 0.000078 psia

The mole fraction of phenol in the vapor is thus:

$$0.000078/14.696 = 5.3E\text{-}06$$

The vapor mole fraction is the same as the volume fraction. The weight fraction of phenol in the vapor is calculated as follows:

Basis: 100 moles

Moles of phenol = 5.3E-6 * 100 = 0.00053
Moles of other gas = 100 - 0.00053 = 99.99947

Assume the other gas is air with a molecular weight of 29:

pounds phenol in the 100 moles = 5.3E-4 * 94 = 0.0498
pounds air = 99.99947 * 29 = 2899.98

Thus, the weight fraction phenol in the vapor is:

$$0.0498/(2899.98 + 0.0498) = 0.0000172 \text{ pounds phenol/pound gas}$$

Thus, if the Primary Condenser water contains 2 percent phenol by weight, the gas in equilibrium with the Primary Condenser water will contain 0.0000172 pounds of phenol per pound of gas.

This calculation is repeated for different concentrations of phenol in the water and the results are shown in Table 2-8.

Table 2-8
Equilibrium Concentration of Phenol in the Gas Phase Above 100°F Water

Weight (% Phenol in Water)	Mole Fraction in Water	Mole Fraction in Vapor	Weight Fraction in Vapor
2	3.89E-03	5.32E-06	1.72E-05
3	5.89E-03	8.01E-06	2.60E-05
4	7.92E-03	1.08E-05	3.49E-05
5	9.98E-03	1.36E-05	4.40E-05
6	1.21E-02	1.64E-05	5.33E-05
7	1.42E-02	1.93E-05	6.27E-05

As shown in the previous section, the gas at 100°F can hold 0.0046 weight fraction of phenol vapor. The gas in equilibrium with water containing 7 percent dissolved phenol holds 0.000063 weight fraction of phenol at equilibrium. The major mechanism for phenol removal will be its solubility in water, not condensation. Even at the 40°F temperature at the HEME, the gas can hold 0.000344 weight fraction of phenol vapor.

Table 2-9 shows the effect of temperature on the equilibrium concentration of phenol in the vapor phase.

Table 2-9
Equilibrium Concentration of Phenol in the Gas Phase Above a Six Percent Water Solution at Various Temperatures

°F	Phenol (psia)	Mole Fraction in Water	Mole Fraction in Vapor	Phenol Weight Fraction in Vapor
90	0.0136	1.21E-02	1.12E-05	3.63E-05
100	0.0201	1.21E-02	1.64E-05	5.33E-05
110	0.0292	1.21E-02	2.40E-05	7.78E-05
120	0.0419	1.21E-02	3.45E-05	1.12E-04
130	0.0594	1.21E-02	4.88E-05	1.58E-04
140	0.0833	1.21E-02	6.84E-05	2.22E-04

As the temperature increases, the vapor pressure of the phenol increases and the amount of phenol carried over in the vapor increases. Even at 140°F, the concentration of phenol in the vapor is below the equilibrium concentration at the HEME.

We can conclude that no phenol will be removed by condensation at the HEME, phenol will be removed from the gas stream in a water solution. This is even more pronounced for less volatile semivolatiles. In general, water soluble compounds will be removed in the water.

2.3.1.3 Dioxin Emissions

Dioxins are even less volatile than PCBs, so their removal efficiency in the BCDP APCS should be better than PCBs. More importantly, dioxins require oxygen to form. The reduced oxygen levels in the reactor and off-gas system should significantly reduce the potential formation of dioxins.

2.3.1.4 Metals and Particulate Removal

Hazardous waste incinerator regulations have limits on particulate and hazardous metals in the off-gas. The BCDP reactor operates at much lower temperatures than an incinerator, below 900°F, so many of the metals that are volatilized in an incinerator will never leave the soil in the BCDP. Any metals that do come off will be cooled to about 40°F and passed through a HEME, a device designed to remove submicron particles. Metals emissions are expected to be significantly below incinerator standards. Guam's coral soil is naturally low in metals, and metals emissions were not an issue at that site.

Because of the HEME, particulate emissions should also be well below incinerator standards. Although most particulate is removed in the WESP, the HEME provides assurance that no significant quantities of particulates will be found in the off-gas.

2.3.1.5 Volatile Organic Compound Removal

The APCS designed for the BCDP has no provisions other than carbon for removing non-water soluble volatile organic compounds (VOC). The carbon was installed to enhance PCB removal, and would probably become saturated with VOCs. Guam is a clean air area, and VOC emissions were not a regulatory problem. If the BCDP were to be installed in an area that had strict VOC regulations, a small thermal oxidizer could be installed following the Carbon Adsorption unit to remove the VOCs.

2.3.2 Steam as an Inerting Gas

Conventional thermal desorbers draw air over the hot soil to sweep away the contaminants as they are driven out of the soil by heat. Some units have operated using exhaust gas from the burners or even nitrogen as a sweep gas. Steam has the advantage over these other sweep gases because it can be condensed and removed from the gas stream after it has left the kiln. The inerting properties of steam are key to operating the WESP in the APCS.

A WESP is one of the few devices that is capable of removing the submicron organic aerosols exiting the RKR. The WESP contains a bank of tubes that the gas passes through. A wire conductor passes through the center of each tube that is supported by a grid located at the top and bottom of the tubesheet. A maximum of up to 40,000 volts is maintained between the wires and the tubes. Particles, including organic aerosols, moving through the tube acquire an electrical charge from the

wire. They are then electrostatically attracted to the tube wall, which has an opposite charge. The particulates contact the tube walls and agglomerate.

Water is continuously sprayed into the bottom of the tubes concurrent with the gas flow. This water flushes the walls of the tubes and washes the agglomerated particulates off the tubes.

Because of the high voltage that must be maintained between the wire and the tube, the WESP sparks, typically several times a minute. A high energy spark is an excellent ignition source. The gas leaving the kiln contains organics from the soil, an excellent fuel. The Lower Explosive Limit (LEL) of organics varies, but typically it is between 1 and 5 volume percent of the gas in air. LEL is defined as the lowest concentration of organics in a homogenous mixture of air and organic(s) that is sufficient to allow an explosion or fire to occur when an ignition source is present.

The high energy spark is unavoidable if a WESP is to be operated. The quantity and composition of organics coming off the soil are uncontrollable. Of the three elements of the fire triangle, oxygen, fuel, and ignition source, oxygen was the only controllable variable.

2.3.2.1 Minimum Oxygen Concentration

Just as there is a LEL for organics in air, there is also a Minimum Oxygen Concentration (MOC) necessary for combustion. Like the LEL, this concentration depends on the specific organic(s) involved. The MOC also depends on the gas used to dilute the oxygen. The U.S. Bureau of Mines has conducted extensive testing of MOC [12] and their data provided important guidance in determining the MOC for the operation of the WESP.

Most published MOC data is for inerting with carbon dioxide and nitrogen. The National Fire Protection Association (NFPA) 69, Standard for Explosion Prevention Systems [4], provides tabulated values for the maximum safe oxygen concentration for nitrogen inerting and carbon dioxide inerting of various organics. NFPA 69 also provides general guidelines for inerting systems including procedures for performing temperature corrections on the published data. The Society of Fire Protection Engineers (SFPE) Handbook of Fire Protection Engineering, 1988, provides guidance on calculating the LELs of mixtures of organics.

In general, inerting hydrocarbons with carbon dioxide gives an MOC between 12 and 15 percent oxygen, while nitrogen inerting yields an MOC of 10 to 13 percent oxygen. The most flammable

gas presented in the literature is hydrogen, which has a MOC of 6 percent with carbon dioxide inerting and 5 percent with nitrogen inerting. Table 2-10 provides data on the maximum oxygen percentage to prevent ignition for some common flammable gases. While steam inerting data were scarce, the available data indicate that steam is a better inerting agent than nitrogen, but not quite as good as carbon dioxide. In general, carbon dioxide inerting allows about 20 percent more oxygen than nitrogen, and steam inerting allows about 10 percent more oxygen.

Table 2-10
Maximum Permissible Oxygen Percentage to Prevent Ignition of Flammable Gases and Vapors Using Nitrogen and Carbon Dioxide for Inerting

	N_2-Air		CO_2-Air	
	O_2 % Above Which Ignition Can Take Place	Maximum Recommended O_2 %	O_2 % Above Which Ignition Can Take Place	Maximum Recommended O_2 %
Acetone	13.5	11	15.5	12.5
Benzene (Benzol)	11	9	14	11
Butadiene	10	8	13	10.5
Butane	12	9.5	14.5	11.5
Butene-I	11.5	9	14	11
Carbon Disulfide	5	4	8	6.5
Carbon Monoxide	5.5	4.5	6	5
Cyclopropane	11.5	9	14	11
Dimethyl butane	12	9.5	14.5	11.5
Ethane	11	9	13.5	11.0
Ether	--	--	13	10.5
Ether (Diethyl)	10.5	8.5	13	10.5
Ethyl Alcohol	10.5	8.5	13	10.5
Ethylene	10	8	11.5	9
Gasoline	11.5	9	14	11
Gasoline				
73-100 Octane	12	9.5	15	12
100-130 Octane	12	9.5	15	12
115-145 Octane	12	9.5	14.5	11.5
Hexane	12	9.5	14.5	11.5
Hydrogen	5	4	6	5
Hydrogen Sulfide	7.5	6	11.5	9
Isobutane	12	9.5	15	12
Isopentane	12	9.5	14.5	11.5

Table 2-10 Maximum Permissible Oxygen Percentage to Prevent Ignition of Flammable Gases and Vapors Using Nitrogen and Carbon Dioxide for Inerting				
	N_2-Air		CO_2-Air	
	O_2 % Above Which Ignition Can Take Place	Maximum Recommended O_2 %	O_2 % Above Which Ignition Can Take Place	Maximum Recommended O_2 %
JP-1 Fuel	10.5	8.5	14	11
JP-3 Fuel	12	9.5	14	11
JP-4 Fuel	11.5	9	14	11
Kerosene	11	9	14	11
Methane	12	9.5	14.5	11.5
Methyl Alcohol	10	8	13.5	11
Natural Gas (Pittsburgh)	12	9.5	14	11
Neopentane	12.5	10	15	12
n-Heptane	11.5	9	14	11
Pentane	11.5	9	14.5	11.5
Propane	11.5	9	14	11
Propylene	11.5	9	14	11

The data in Table 2-10 are from reference [12].

No information or calculation protocols were found for adjusting MOC for temperature. Most LEL values are reported at ambient temperature, 77°F. NFPA 86, Appendix E, Pages 86-71 provides an LEL correction factor for different temperatures. Higher temperatures decrease the organic concentration necessary for flammability. In general, there is a 5 percent reduction in the LEL value for each 100°F rise in temperature above 77°F. Moving from 77°F to 212°F reduces the required organic concentration by a factor of 0.94.

Ultimately, the decision of what MOC to use in the WESP was based on the above reference data and engineering judgement in areas where the protocols fell short of providing sufficient data. The WESP would be operated at an oxygen content below 5 percent. If the oxygen content ever reached 5 percent during operation, the power to the WESP would automatically switch off. This instantly removes the ignition source.

2.3.2.2 Measurement of Oxygen in the WESP

For the proposed control system to work, the oxygen content of the gas in the WESP has to be measured on a real time basis. The gas entering the WESP is dirty with particulate, organic vapors, and organic aerosols, and is high in water vapor. No instrument could be found that would continuously monitor this gas and report the oxygen content on a real time basis. While the gas leaving the WESP is clean, it is still water saturated, and a reliable, real time instrument to measure oxygen could not be located.

The solution is to insure that the gas in the WESP is water saturated and use the temperature to measure the oxygen content of the gas. If air is water saturated, the water vapor content (humidity) of the air is dependent on the temperature. By measuring the temperature of the gas, the air-water vapor ratio can be determined.

The assumption is that the gas in the WESP consists of water vapor and air, and that the air is 21.9 volume percent oxygen. This assumption is conservative. To the extent that organic vapors are in the WESP gas, the oxygen content will actually be lowered. Organics, like steam, will displace air.

Figure 2-2 shows the oxygen content of air saturated with water vapor as a function of temperature. The graph was constructed by determining the saturated air/water vapor ratio at different temperatures from a psychometric chart and then calculating the oxygen content of the air. The oxygen content reaches 5 percent at a temperature of 198°F.

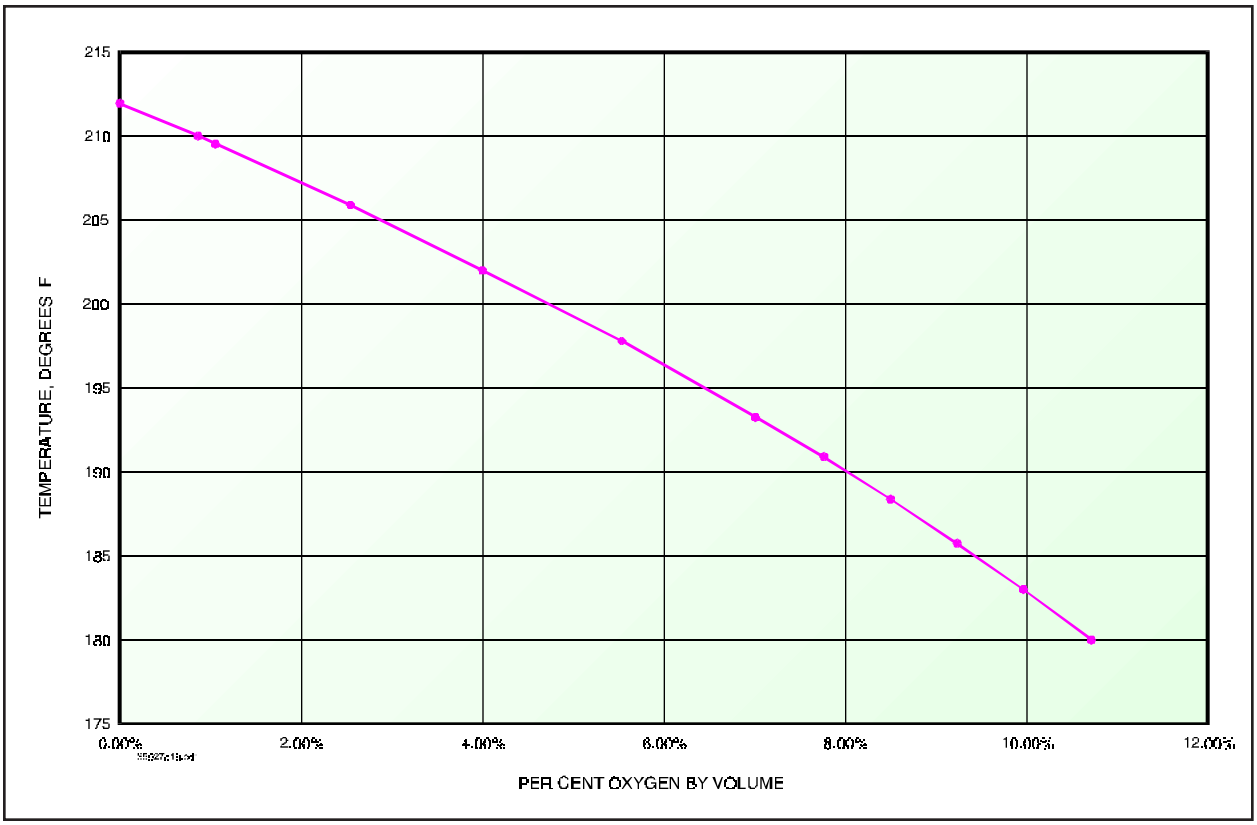

Figure 2-2
Percent Oxygen Versus Temperature in Water Saturated Air

As an example calculation, the psychometric chart shows that at 198°F air contains 1.917 pounds of water vapor per pound of dry air. Thus, 100 pounds of dry air would contain 191.7 pounds of water vapor. The volume percent air in this mixture is calculated by determining the mole percent, which is the same as the volume percent:

100 pounds air = 100/29 = 3.45 moles of air

191.7 pounds water = 191.7/18 = 10.65 moles of water

Total moles = 3.45 + 10.65 = 14.10

Mole (and volume) fraction air = 3.45/14.10 = 0.24

Air is 21.9 volume percent oxygen. The oxygen content in the saturated gas at 198°F is:

$$0.219 * 0.24 = 5.4 \text{ percent}$$

2.3.2.3 WESP Oxygen Control System

To use the control method, the gas in the WESP must be water saturated. This is assured by several steps. First, steam is used as a sweep gas in the kiln and the kiln is operated with attention to excluding leaks. Moisture from the soil goes into the kiln off-gas and further increases the water content of the off-gas. The quench, where water is sprayed into the off-gas, is located just before the WESP, and the gas enters the quench at a temperature well over 212°F. Quench water is evaporated and added to the off-gas stream.

After the gas passes through the quench it enters the WESP and passes over the spray nozzles as it enters the WESP tubes. This contact with water sprays insures that the gas is water saturated. If the water sprays stopped, the gas might not be saturated. The water going to the quench and WESP spray tubes passes through a magnetic flow meter. The normal flow is between 40 and 50 gallons per minute (gpm). If the flow drops to 35 gpm, an alarm sounds. At 30 gpm, electrical power to the WESP is automatically shut down. If the water necessary to insure that the gas is saturated stops, the ignition source is removed to prevent a possible explosion.

Gas temperature is measured as the gas leaves the WESP. Since there is no heat source in the WESP tubes, the gas leaving the WESP is not hotter than the gas in the tubes where the sparking occurs. This thermocouple triggers an alarm at 203°F (an oxygen content of 4 percent) and automatically shuts down power to the WESP at 198°F (5 percent oxygen).

As a final safety, low pressure (15 pounds per square inch gage [psig]) steam is injected into the quench. This steam flow is controlled by the WESP gas outlet temperature. The outlet temperature is a set point, and the quench steam is metered through a control valve to maintain the set point. If additional air infiltration occurs, or additional heat loss occurs in the system, the quench steam flow will automatically increase to maintain the desired oxygen content.

2.4 Air Pollution Control System Equipment

This section discusses the equipment in the APCS.

2.4.1 Multiclone

The cyclone from the demonstration run was replaced with a Multiclone that contained three small cyclones. During the demonstration runs, organics would condense in the cyclone and wet the fines. This caused plugging problems in the cyclone discharge. To minimize condensation in the full-scale system, the cyclone was insulated and the bottom conical section of the cyclone where the air is stagnant was heat traced. Material dropping out of the cyclone went through a rotary star valve and from there fell through a flexible bellows tube into a 55-gallon drum for collection. The flexible bellows tube allowed the drum lid to be easily removed to change drums.

Some plugging problems were experienced at the rotary valve, but the material in general stayed much drier than it did during the demonstration runs because of the insulation and heat tracing.

2.4.2 Wet Electrostatic Precipitator

The WESP quench system was custom designed for the BCDP. The gas exiting the cyclone drops into the quench section at the entrance of the WESP, shown in Figure 2-3. Process water is continuously sprayed into the gas in the quench section to cool the gas down below 212°F and fully water saturate the gas.

The most important consideration in the operation of the WESP is to ensure that an explosive mixture never forms inside the unit. Organics from the soil provide fuel and the frequent sparking that occurs in the WESP provides an excellent ignition source. As explained in Section 3.0 of this report, water vapor (steam) is used to displace oxygen in the WESP and ensure that there is never enough oxygen to support a flame or explosion. The two elements that combine to provide this assurance are a water saturated gas and a sufficiently high gas temperature to ensure that water vapor is displacing the oxygen. The continuous water spray at the quench, as well as a continuous water spray into the bottom of the WESP tubes, provides assurance that the gas is saturated. The thermocouple measuring the temperature of the gas exiting the WESP (TE524 on the Piping and Instrumentation Diagrams [P&ID]) provides assurance that the temperature is high enough. The temperature indicator at the WESP gas outlet, TE524, was set to alarm at 203°F and shut the electrical power to the WESP down at 198°F.

In addition to water, 15 psig steam from the boiler is injected into this quench section. The quench steam flows through a control valve, FY714, which is controlled by the temperature of the gas leaving the WESP. The operator sets the desired temperature of the exit gas and the steam flow

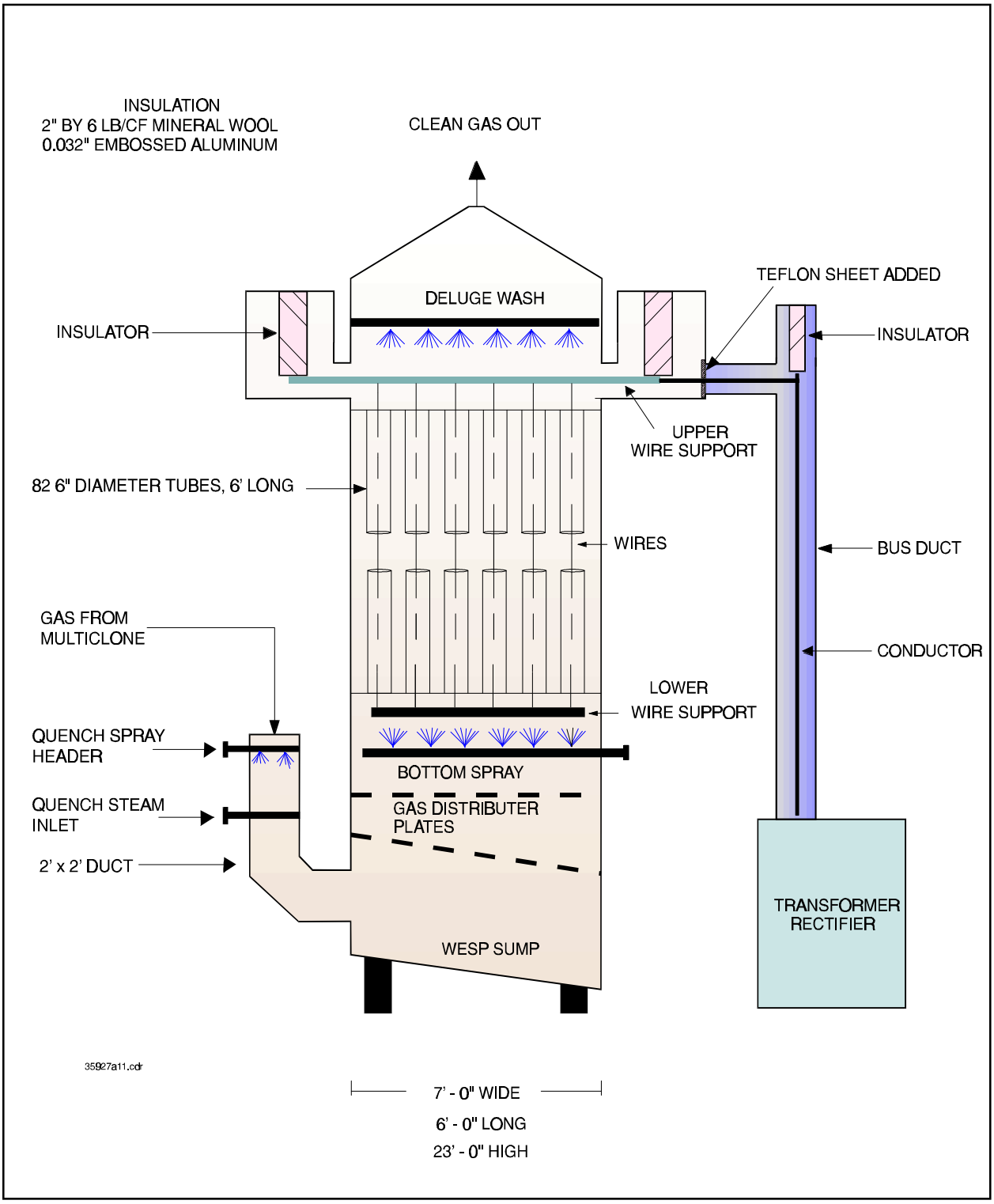

Figure 2-3
Wet Electrostatic Precipitator (WESP)

control valve is automatically adjusted by TE524 to maintain that temperature. Recall that the entire off-gas system from the kiln to the ID Fan is operated under a vacuum. If a leak should occur that allows air into the system somewhere before the WESP, the air will quickly heat up and evaporate water. The evaporation will cool the gas and the temperature as measured by TE524 will drop. The lower temperature will automatically open the steam valve to bring the temperature back up. As the temperature increases, additional water evaporates to dilute the oxygen in the infiltrated air down to the target operating level of less than 4 percent oxygen.

It was not known during the design whether this steam injection would be used on a regular basis because the amount of air infiltration and heat loss in the system could only be estimated.

The gas passes through the quench section into the bottom plenum of the WESP. Perforated plates below the WESP tubes are used to distribute the air flow uniformly across the tubes. Spray nozzles are located along the entrance of the tubes and water is constantly sprayed up into the tubes and mixed with the gas. In addition to ensuring that the gas is water saturated, this water also washes the tube walls. The water drips down off the tubes and accumulates in the WESP sump. The WESP recirculation pump takes water from the sump and pumps it back around to the quench and WESP tube spray nozzles. A level control meter (LIC524) ensured that there was always enough water in the sump to provide suction to the WESP recirculation pump. At a low sump level, LIC524 opens a solenoid valve (LV5248) which added process water to the sump.

The WESP recirculation pump discharges through a magnetic flowmeter (FT521). A continuous flow of water was necessary to ensure saturation, a key safety feature. FT521 normally recorded a flow between 40 and 50 gpm. It was tied to an alarm that sounded if the flow should drop to 35 gpm and it would automatically turn off the power to the WESP if the flow dropped to 30 gpm. This removes the ignition source instantly.

The recirculation pump initially used on the WESP was a chemical sealed diaphragm pump. The pump had to be able to operate at a low net positive suction head (NPSH) (5 to 8 feet of water), pump a slurry, and also ensure that no air was added to the WESP. The chemical sealed diaphragm pump had two diaphragms on each side with a colored liquid between the diaphragms. If one of the diaphragms should rupture, this liquid would escape and the operator would be able to tell either from a loss of liquid or a change in color in the liquid that a diaphragm had failed. A number of operating problems were encountered with this pump and it was later replaced with a progressing

cavity pump. The progressing cavity pump meets all the requirements previously outlined for this pump and has no compressed air associated with it, thus, it is inherently much safer. Unlike a diaphragm pump, a progressing cavity pump cannot be run dry, and an interlock was added to stop the pump if the flow stopped.

A blowdown line branched off the WESP recirculation line that carried waste liquid to the wastewater treatment plant (WWTP). The blowdown flow was preset and controlled by the flow control valve (FV528). A Fin Fan air cooled heat exchanger left from the demonstration runs was used to cool the blowdown flow to prevent it from raising the temperature in the WWTP.

An acid addition system was added to the WESP recirculation line to reduce solids buildup. The water accumulating in the WESP sump had a pH of about eight. Some of this is due to the sodium bicarbonate and sodium carbonate coming from the reactor, but it is also due to the high levels of calcium carbonate in the naturally occurring soils of Guam, a coral island. Titration studies in the laboratory showed that 60 to over 80 percent of the solids could be dissolved if the pH were reduced to six. Coral reacts with sulfuric acid to produce water, carbon dioxide gas, and calcium sulfate salt. This was an effective means of reducing the overall solids buildup in the WESP. The pH was not taken below six to insure that no acid corrosion damage occurred.

Ninety-three percent sulfuric acid was available on Guam. This acid was added directly to the WESP recirculation line after the pump and magnetic flow meter. Initially, the acid was added before the flow meter, but the meter reading fell to zero as soon as the acid was added. This was probably because of gas bubbles that form in the liquid where the acid is added. The injection point was moved upstream of the meter.

Dilute (around 5 to 50 percent) sulfuric acid is very corrosive, and the 200°F temperature of the WESP recirculation water makes it even more corrosive. Teflon tubing was used to pipe the acid to a teflon injection valve. The steel pipe was replaced with chlorinated polyvinyl chloride (CPVC) pipe at the injection tee and for about three feet downstream of the injection point. This gave the acid time to mix and react before reaching the steel pipe.

The acid reacts with the coral to form the acid salt, carbon dioxide, and water:

$$H_2SO_4 + CaCO_3 = CaSO_4 + H_2O + CO_2$$

The carbon dioxide joins the gas stream and the calcium sulfate dissolves in the water. The calcium sulfate is only soluble at about 0.2 percent in water, but the solids in the WESP blowdown were typically about 0.25 percent. Calcium chloride is much more soluble and hydrochloric acid was considered instead of sulfuric. The hydrochloric acid was only available in drums as a 20 percent solution and was much more expensive per pound of acid. Using hydrochloric acid would not have been economical.

The quantity of gas released into the gas stream was insignificant. Acid addition started August 5, 1996, after the stack test. The reduction in residuals started on that date.

Acid addition was economical in it's own right. Any solids captured in the WESP would ultimately become filter cake from the water treatment plant. In fact, a pound of dry solids entering the WESP would become two pounds of wet filter cake, a contaminated residual, that would have to be shipped off island for disposal on the mainland. After deducting the cost of the acid, each ton of fines dissolved actually saved the project $1,000. This figure is based on the cost of shipping material from Guam to the mainland for disposal by incineration.

Before the WESP started up, an oil-water separator to remove both sinking and floating organics was built and added to the WESP sump. It covered about 20 percent of the sump footprint below the WESP tubes. A lid on the separator collected the water and directed it into the feed end of the separator. Two pipes from the separator penetrated the WESP wall and were for batch draining heavy and light organics that accumulated in the WESP. This unit never recovered any oil, and after a few weeks of operation, plugged with solids. The separator was left in the WESP for the duration of the job.

The WESP removes particulate, including condensed organics, with electrostatic force. Each of the tubes through which the gas passes as it goes through the WESP has a wire hanging down through the center of the tube. The wire and the tube are oppositely charged. The particle takes on the charge of the wire and then is attracted to the tube wall. As shown in Figure 2-3, these wires are supported by a metal grid at each end of the tube bank. Since this metal grid has a charge that is opposite from that of the body of the WESP, it must be supported off of the WESP frame by insulators.

In a typical WESP design, these insulators are set at the top of the WESP and outside air is used to flush the insulators and keep moisture from condensing on them. If moisture or anything else condenses on these insulators, it can provide a pathway for current to flow. If current flows across the insulator, it will create a short that will reduce the operating voltage (and the gas cleaning efficiency), or take the WESP out of service. Introducing outside air into the WESP was unacceptable because that would introduce oxygen into the WESP. To get around this problem, the insulators were mounted in compartments built on the side of the WESP. This removed them from the air stream flowing through the WESP.

The Transformer Rectifier (TR) that provided the high voltage direct current to the WESP rests on the ground. Power is conveyed from the TR to the WESP through a bus duct that connects the TR on the ground to the insulator compartment. After the unit arrived on Guam, electrical heating tape and insulation was added to this bus duct. Keeping the bus duct hot helped prevent moisture from condensing in this area.

A teflon sheet was added to cover the opening where the bus duct entered the body of the WESP. The bus bar traveled through a three-inch hole in the teflon. This was another modification to keep contaminants out of the bus duct.

A set of spray nozzles was also located at the top of the WESP tubes. These nozzles could be used to provide a deluge flush for cleaning the tubes on an as-needed basis.

2.4.3 Primary Condenser

Gas leaving the WESP entered the Primary Condenser, a vertical shell and tube heat exchanger setting above a knockout pot. The gas passed through the tube side of the exchanger and cooling tower water circulated on the shell side. Steam condensed in the tubes and drained into the knockout pot. The cooled noncondensible gases flowed out of the tubes, made a 180-degree turn, and left through the gas exit pipe. A level indicator controller on the knockout pot energized the pumps at high level to pump condensate out to the WWTP.

The heat exchanger contained one-inch tubes. If the gas stream entering the tubes contained significant amounts of oil and particulates, there is a danger of fouling the tubes. The design depended on two factors to keep this from happening. If the WESP is operating properly, the gas leaving the WESP should be clean. Second, a large amount of the gas is steam which condensed on

the walls of the tubes and ran down the tubes into the knockout pot at the bottom of the exchanger. This water continuously flushed and cleaned the tubes.

A gas bypass was added around the WESP and Primary Condenser that would direct off-gas from the cyclone directly to the Venturi Scrubber (the rapid start configuration). If the WESP had to be taken out of service for a long period of time, the unit could be bypassed. The main reason for this bypass was to protect the Primary Condenser. While the WESP could be opened up and cleaned easily, cleaning the one inch tubes in the Primary Condenser was more difficult.

2.4.4 Venturi Scrubber/Bubble Tray Scrubber

Gas leaving the Primary Condenser flowed first through the Venturi Scrubber and then made a 180-degree turn and went through a Bubble Tray Scrubber. These scrubbers were used for particulate removal during the Rapid Start when the WESP and Primary Condenser were not yet available. In the full-scale configuration, the scrubbers were not used and, in fact, the gas flow through them was too low to make use of this equipment.

The Bubble Tray Scrubber had two steel access plates that were replaced by plexiglass. A strong flashlight shining through the plexiglass into the unit made it possible to qualitatively measure the amount of mist and fines in the gas. When the WESP was operating well, the gas inside the Bubble Tray Scrubber was clear, and the flashlight beam could not be seen. If the WESP was operating at low efficiency, the light beam could be seen because of the particulate in the scrubber (the Tyndall effect). If the WESP was turned off, a dense fog could be seen through this plexiglass, and the back of the scrubber could not be seen.

2.4.5 Chiller Condenser

The Chiller Condenser is a heat exchanger with gas passing through the shell side and ethylene glycol/water solution at about 25°F passing through the tube side. This unit cooled the gas further, condensed some additional water, and allowed some additional condensation of organics. The refrigeration system that supplied the chilled glycol/water solution was a packaged unit in a separate building. The refrigeration system used cooling tower water as the heat rejection medium. From the Venturi Scrubber through the rest of the APCS, CPVC piping was used. CPVC is much lighter and easier to use than steel, and also has better insulation properties.

The gas exiting the Chiller Condenser was colder than the ambient temperature on Guam. As a result, the gas heated up as it traveled through the rest of the system and that heat up ensured that the gas was dry. This meant that no water would condense in the carbon system that came after the Chiller Condenser. Any mist of water droplets that left the Chiller Condenser were removed by the HEME.

2.4.6 High Efficiency Mist Eliminator

Gas from the Chiller Condenser passed through one of two HEMEs piped in parallel. The mist eliminator vessel is a steel tank with a flange ring about one foot from the top of the vessel, shown in Figure 2-4. The cage holding the HEME element bolts down on this flange and utilizes a thick teflon gasket to prevent gas leaks. Gas passed from the outside to the inside of the cylinder where it exited through the top of the HEME tank.

The HEME was designed to allow the elements to be replaced in the field as needed. The element consisted of two sleeves, each about 1.5 inches thick. The inner sleeve was first placed on the cage, then a slightly larger second sleeve was pulled over the first sleeve. A prefilter bag was then placed over the element for solid particulate removal. This bag costs $300 versus $2,400 for the elements, and was relatively easy to replace.

To allow for removal and replacement of the HEME elements, a removable section was cut in the roof of the building and an I-beam was mounted about 8 feet above the roof. An electric wench was mounted on the I-beam that could be used to extract the element, move it to one side, and lower it to the building floor.

Like the WESP, this unit is nearly 100 percent efficient in removing particles above three microns in size and 99 percent efficient in removing smaller particles. Also, like the WESP, the HEME has almost infinite turndown. The lower the gas velocity through the element, the more efficiently the HEME operates. Organics that are taken out in the HEME will wet the fabric, and after a sufficient buildup of organics or other liquids, the liquid will drain to the bottom of the element. Since the gas flowed from the outside to the inside of the cylinder, the liquid tended to flow towards the inside wall of the element and accumulate in the bottom of the HEME cage.

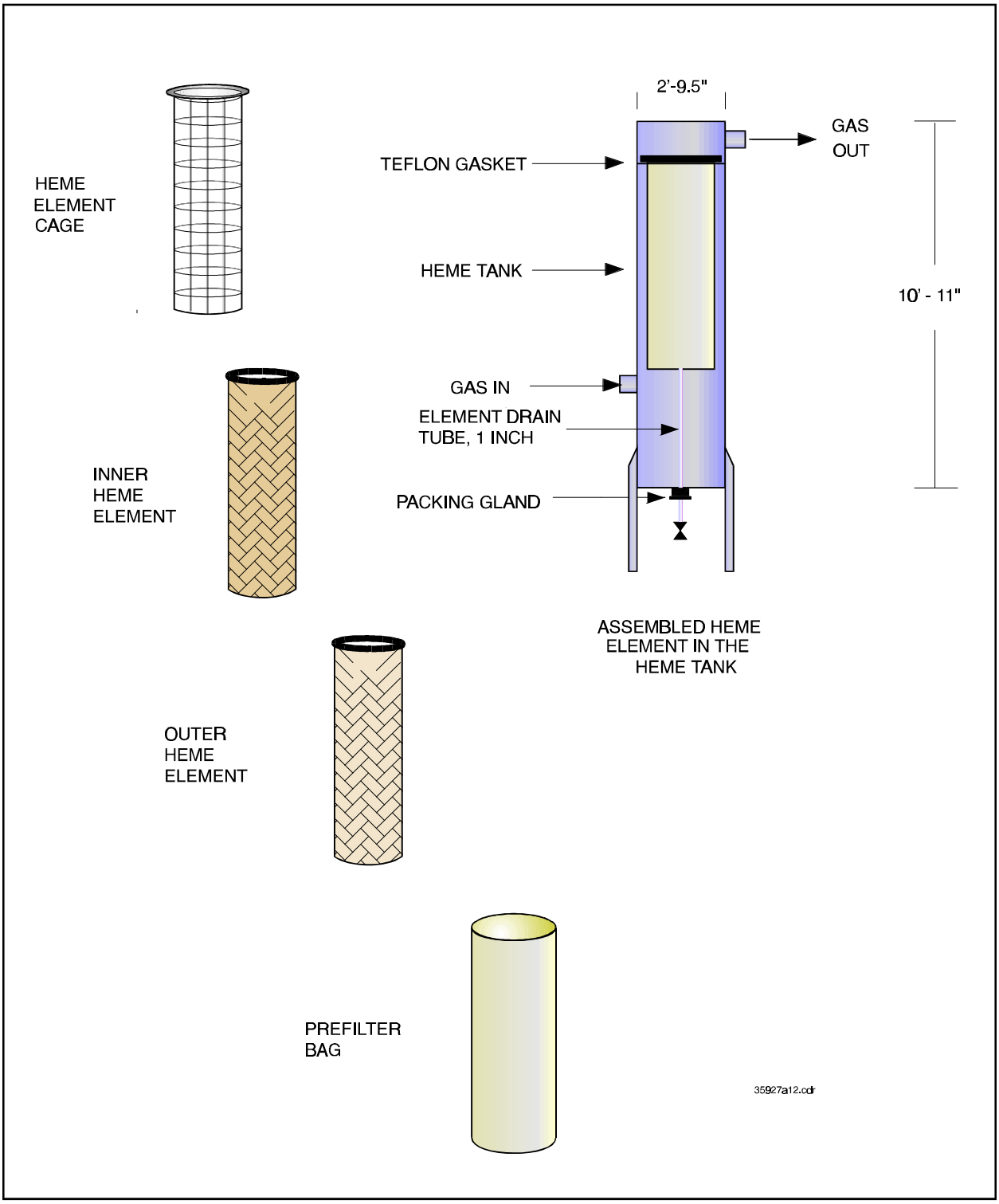

Figure 2-4
High Efficiency Mist Eliminator (HEME)

A drain pipe from the bottom of the HEME cage to the outside of the element allowed any accumulated liquids to be removed. To drain a HEME, the flow was switched to the standby HEME, the isolated HEME was drained, then put back on line.

Initially, the element drain tube dropped to within 2 inches of the bottom of the HEME tank. At least 30 inches of water was added to the bottom of the HEME tank to submerge the drain tube and provide a seal. Collected liquid would mix with the water and periodically be drained.

This was later modified and the 1-inch element drain tube was extended down through a 2-inch valve at the bottom of the tank. A packing gland was constructed to seal the 1-inch pipe where it passed through the 2-inch valve. A valve was placed on the end of the 1-inch pipe that could be opened periodically to drain the HEME element. This modification allowed any material that collected in the HEME to be drained directly instead of diluting it in seal water.

A steam injection point was added to the HEME tanks. The HEME elements were fiberglass and could tolerate temperatures over 200°F. To clean a plugged HEME, the unit was isolated and steam was blown into the tank. Condensate was drained out of the element drain.

The HEME is the most likely place where co-solubility removal of organics will be encountered in this system. Technically, the HEME only removes condensed material; however, if organic liquids build up in the element, organic vapors that are soluble in the organics in the HEME can be removed by solubilization into that liquid. This effect would be difficult to calculate without knowing the actual organic compounds involved.

2.4.7 Induced Draft Fan

Gas leaving the HEME travels through the ID Fan. The BCDP utilized a rotary positive blower with a variable speed drive motor.

The ID Fan speed was controlled by the vacuum in the RKR. The operator could enter a set point vacuum and the Fan speed would vary to maintain that set point in the kiln. Maintaining a negative pressure in the kiln and through the bulk of the air capture system ensured that contaminated gas did not escape the system. If there were any leaks, air would be leaking in instead of contaminated gas leaking out.

This type of blower can only be used on a very clean gas stream. The rotating lobes are not lubricated and very close clearances between the lobes as they spin provide the seal. Any solids getting into these areas of tight clearances could damage the blower.

2.4.8 Air Treatment Carbon

From the ID Fan the gas passed through two air Carbon Adsorption vessels in series. Each vessel contained 600 pounds of vapor phase carbon. Organic vapors in the gas as well as residual PCBs were removed by the carbon. PCBs have a higher affinity for carbon than the lower molecular weight volatile compounds, and would displace those more volatile compounds once the carbon became saturated.

From the carbon, the gas traveled to the vent stack and exited to the atmosphere.

2.5 Wastewater Treatment Plant

The WWTP is a conventional plant utilizing flocculation and clarification followed by oleophilic media to remove oil and finally Carbon Adsorption treatment. Much of the WWTP was assembled using equipment left by the Demonstration Contractor.

2.5.1 Surge Tank

All the flows entered the WWTP at the Surge Tank. The major process flows entering the system were WESP recirculation water and condensate from the Primary Condenser. Intermittent flows included washdown water, decontamination pad water, laboratory sump waste, and storm water. These flows were mixed by air sparging the Surge Tank to provide (to the extent possible) a uniform feed to the rest of the WWTP. The Surge Tank was a bladder tank containing two bladders to maintain secondary containment. Water was pumped from the Surge Tank into Tank S-6020 which was initially installed as an oil-water separator for separating heavy oils; however, no such oils ever accumulated.

2.5.2 Flocculation System

Polymer was injected into the wastewater in a rapid mix zone as it flowed out of Tank S-6020. A small agitator mounted on the side of the tank provided rapid mixing. The wastewater and polymer gravity flowed into the polymer mixing tank, T-6030. A variable speed flocculation mixer was mounted on this tank to flock the solids in the wastewater. Four vertical baffles were mounted on the side of the flocculation tank to aid in mixing.

2.5.3 Clarifier

The clarifier was a fiberglass reinforced plastic tank that had been purchased on the island and then modified to serve as a clarifier. Wastewater entered the clarifier via a stilling well in the top center of the unit and solids settled to the bottom. The overflow weir consisted of a square of 4-inch polyvinyl chloride pipe perforated with one-inch holes and connected to the clarifier discharge pipe. The water level was controlled in the clarifier about 3 inches above this overflow pipe to collect any floating oil. No significant amount of floating oil was observed during the rapid start, but this provision to separate such oil was made in case some appeared either because of a change in operating conditions, or because of a change in the type of soil being treated.

Water flowed from the clarifier to the clarified water tank, T-6065. A level control valve on the pump discharge line from the clarified water tank maintained a constant level in the tank. Since the clarifier overflow line entered the clarified water tank below its normal operating level, the level in the clarifier was always the same as the level in the clarified water tank.

2.5.4 Bag Filters and Oleophilic Media Drums

Water from the clarified water tank was pumped through one of two bag filters operating in parallel. The bag filters were 70 micron. From the bag filters the water flowed through two Oleophilic Media drums in series. These were 55-gallon drums containing a mixture of clay and anthracite. This material adsorbed oils in the wastewater, including emulsified oils.

2.5.5 Water Carbon

Water flowed from Oleophilic Media into two tanks containing carbon that were piped in series. From the Water Treatment Carbon Tanks the treated wastewater flowed into the Treated Water Tank, T-6080. This tank supplied treated water to the rest of the plant. Most of the treated water was pumped to the ash belt and used to cool the reactor product. A level indicator on the Treated Water Tank opened a potable water line to add make-up water to the tank at low level.

A bypass was installed around the Bag Filters and Water Treatment Carbon so that clarified water could be returned back to the plant as process water, largely for the WESP.

Sludge from the clarifier was pumped to a plate and frame filter press for dewatering. The filter cake was dropped into a bin below the filter press and shoveled from the bins into drums for final disposal.

1.6 Controls and Instrumentation

The BCDP computer control system was developed from an off-the-shelf software. The software allows the user to build graphical screens representing the process and to utilize the computer to control the process. Alarm points can be inserted and edited at any time, and switches can be installed on the computer screen to start and stop equipment.

Figure 2-5 shows the screen that depicted the operation of the RKR. This and subsequent screens showed real time data on the computer monitor. The kiln screen shows the four burner temperatures that record conditions outside the rotating steel shell. The six bed temperatures and the ash temperature show the thermal conditions within the kiln. Kiln vacuum, rotation, and feed rate are also shown along with the pounds per hour of steam sweep gas flow. The lower left-hand corner shows the diesel fuel supply in gallons. The two pairs of knife gate valves on the soil feed and product discharge end of the RKR are black when closed and green when open. The actual level in the diesel fuel tank is also depicted graphically.

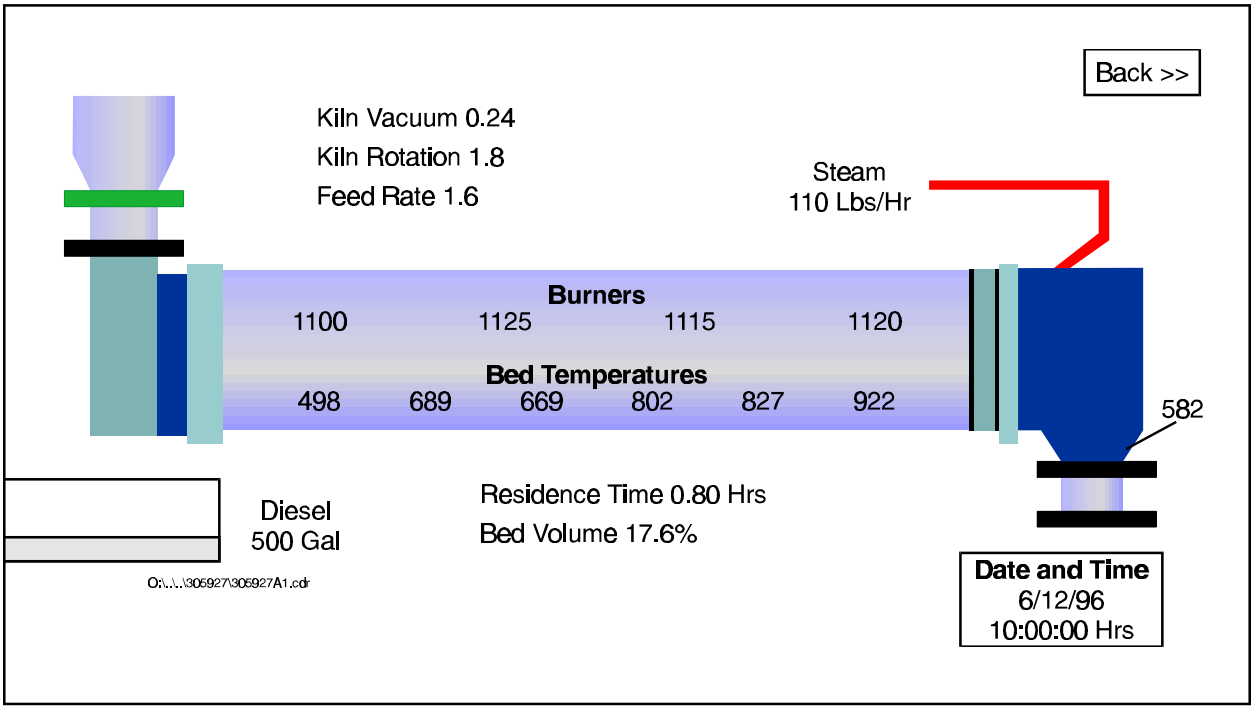

Figure 2-5
RKR Control Screen

The kiln screen also shows residence time and bed volume. These parameters are calculated from the system's operating conditions and shown on a real time basis. The residence time equation is from [7], Pages 20-33.

$$T = 0.23L / (SN^{0.9} D)$$

where T = Time of passage, minutes
L = Kiln length, feet = 30
S = Slope, feet per foot = 0.0289
N = Speed, rpm
D = Kiln diameter, feet = 2.917

If the kiln is rotating at 1.7 rpm, the time of passage (residence time of material in the kiln) is:

$$T = 0.23 * 30/(0.0289 * 1.7^{0.9} * 2.917) = 50.8 \text{ minutes}$$

Note that the residence time of the material in the kiln is independent of the soil feed rate. The bed volume is calculated from the kiln throughput in tph. The density of the material in the kiln is 91 pounds per cubic foot and the total kiln volume is 249 cubic feet. As a general rule, the bed volume should not exceed 15 percent. For the example given above, if the kiln feed rate is 1.5 tph, the bed volume is the volume of the soil in the kiln divided by the total kiln volume, or:

$$\text{Bed Volume} = (1.5 \text{ tons/hour} * 50.8 \text{ hours}/60 * 2{,}000 \text{ pounds/ton})/(91 \text{ pounds/ft}^3 * 249 \text{ ft}^3) = 11.2\%$$

The air pollution control screen is shown in Figure 2-6. This screen shows temperatures and pressure drops throughout the APCS. The WESP, Primary Condenser, and Venturi Scrubber accumulate water in their sumps and are on a level control system. The actual liquid levels are graphically depicted on the screen. All three of these units have a high level alarm, and the computer sounds an audible alarm, as well as indicating the alarm on the screen. Two key variables, kiln vacuum and feed rate, are shown on this screen.

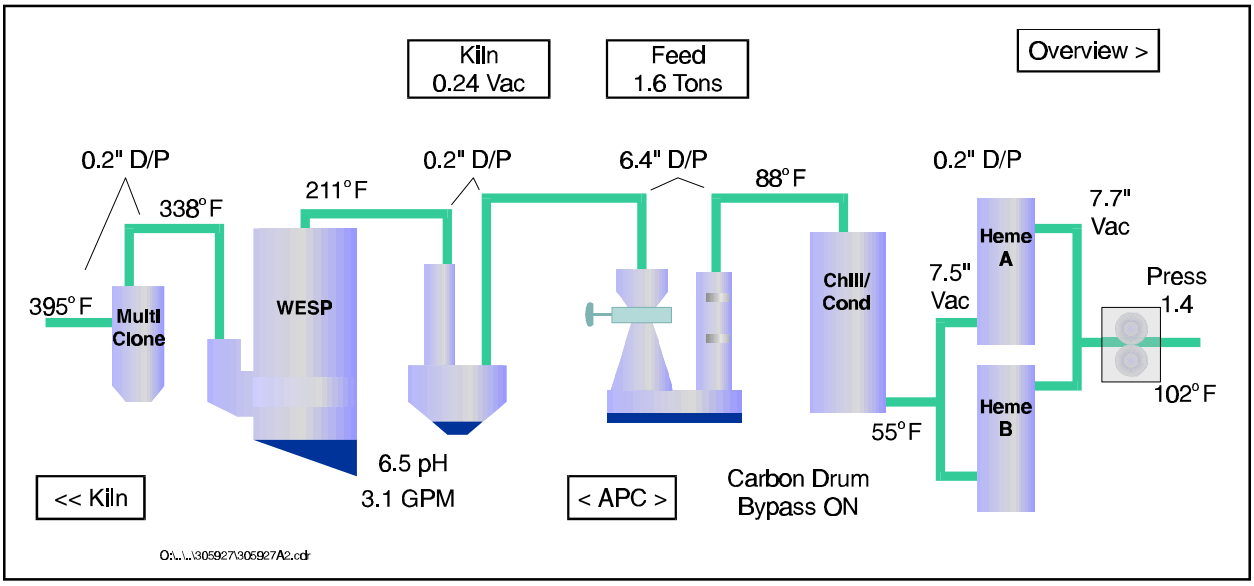

Figure 2-6
APCS Control Screen

Figure 2-7 shows the detailed ID Fan screen. This screen shows the rpm, as well as inlet and outlet pressure and the pressure drop across the Fan. The screen also shows the temperature in and out of the air treatment carbon.

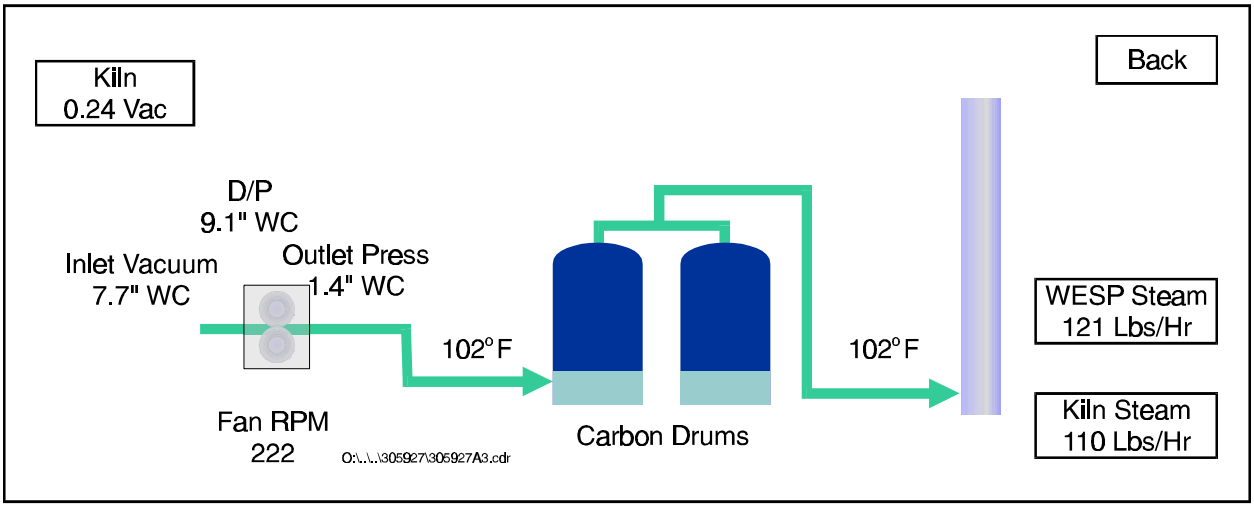

Figure 2-7
ID Fan Control Screen

Figure 2-8 shows the WESP detail screen containing temperatures and flows around the WESP. The process water make-up valve is a solenoid on-off valve. The valve changes color from black to

green when it opens. The recirculation water flow in gpm is also shown along with the pH adjustment system. The percent output of the acid addition pump is displayed along with the pH of the treated WESP recycle. If the WESP shut down, it changed color from gray to red and a reset button appeared on the screen to the right of the WESP. When the conditions causing the shutdown were neutralized, the operator restarted the WESP from the computer.

An alarm summary shows at the bottom of the screens. When a set point exceedance triggered an alarm, the computer caused an audible alarm to sound and the condition causing the alarm was shown in the alarm summary table at the bottom of the screen. These alarms were recorded in the system historian.

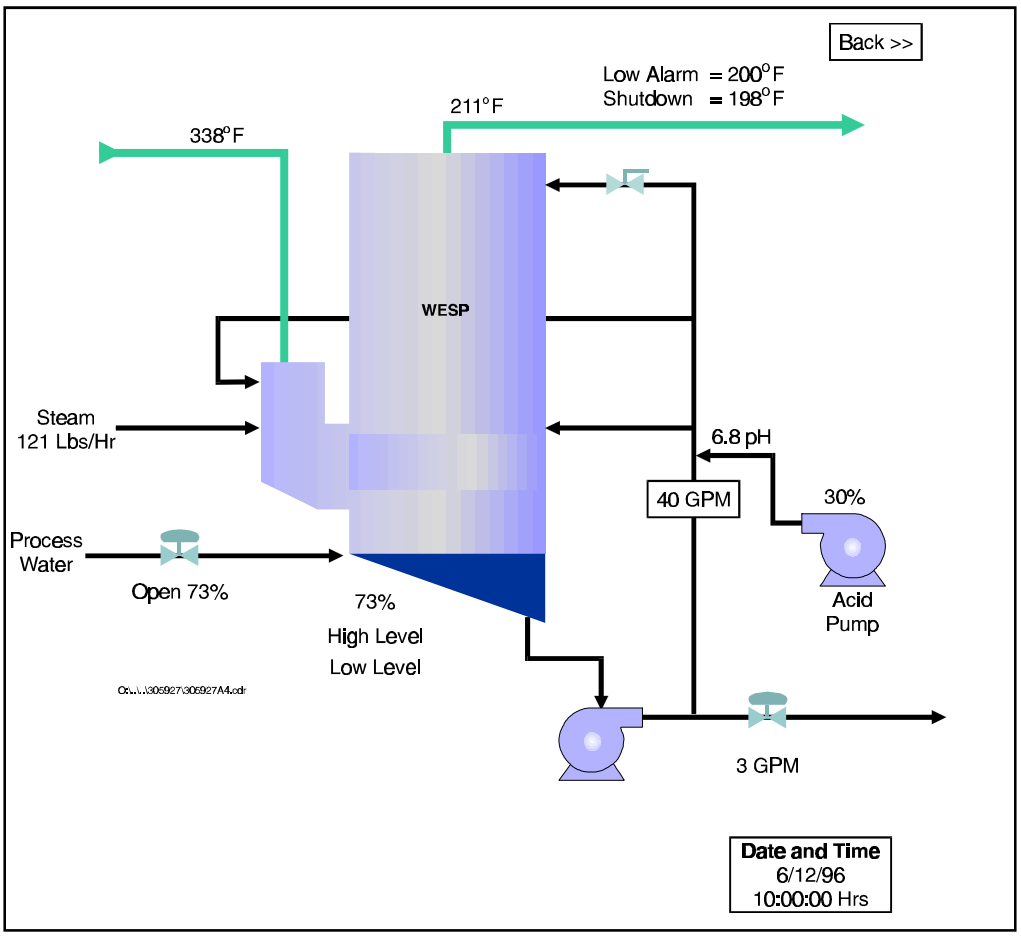

Figure 2-8
WESP Control Screen

The historian stored operating data for the previous four weeks. Table 2-11 shows the different historical screens that were available and the information contained within each screen.

Table 2-11 Historical Instrument Groupings	
Flows and Speeds	**Kiln Temperatures**
F1521 WESP Recycle FI712 Kiln Steam FI714 Steam to WESP SI211 Kiln rpm SI582 ID Fan rpm WI110 Soil Feed Rate	T212A Bed temperature T212B Bed temperature T212C Bed temperature T212D Bed temperature T212E Bed temperature T212F Bed temperature TI811 Ash temperature
Levels	**pH**
LI524 West Sump Level LI530 Primary Condenser LI552 Scrubber Level LI610 Polymer Tank LI665 Clarified Water Tank LI680 Treated Water Tank LI750 Diesel Fuel Tank	AI526A West Inlet pH AI526B West Outlet pH FI528 West Blowdown Flow
Pressures	**Temperatures**
PI582 ID Fan Outlet PDI510 Multiclone DP PDI532 Primary Condenser DP PDI54 Scrubber DP PI560 Chiller Condenser Outlet PI581 ID Fan Inlet PI572 HEME DP PI210 Kiln Vacuum	TI510 Kiln Outlet TI512 Cyclone Outlet TI524 West Outlet Temperature TI554 Scrubber Outlet TI502 Stack Temperature TI582 ID Fan Outlet

Figure 2-9 shows the "pressures" screen. This screen spans a period of 24 hours and shows system pressures during that interval. The specific pressures that are displayed are listed at the bottom of the screen. A vertical bar runs across the graph that can be moved. The specific values listed at the bottom of the screen are those values corresponding to the location of the vertical bar.

In Figure 2-9, the numbers in the lower right area give the pressures at the time indicated by the vertical bar (about 20:00 hours). The numbers on the y-axis, however, only correspond to one of the pressures, in this case, kiln vacuum. The user can change the y-axis to apply to any one of the pressures displayed.

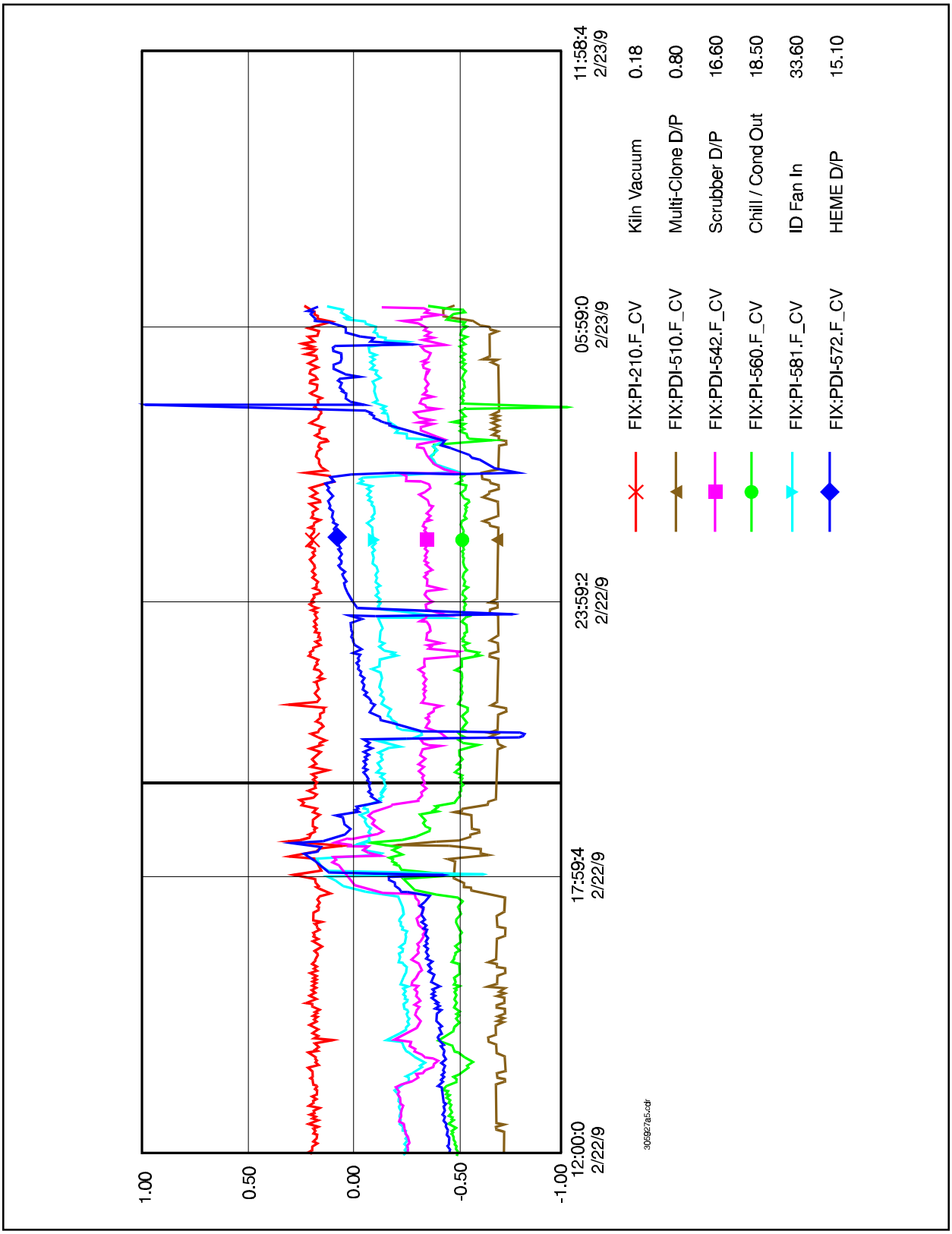

Figure 2-9
Pressures Historical Screen

The user can select to view either a 2-hour or 24-hour interval on the screen. The user can also zoom in on any area of the screen to see more detailed information.

Custom historical screens can easily be created. If the user wishes to see a grouping other than one of those shown in Table 2-11, that grouping can be created and displayed.

The software also stored operating data in a spreadsheet at an interval specified by the user. During the operations on Guam, data were recorded in the spreadsheet every 30 minutes during the operations of the full-scale system. An example of these data are shown in Appendix C.

The historian was used to maintain a record of production and was very valuable in diagnosing equipment operating problems.

3.0 Plant Operation

The BCDP system was operated in two configurations: the rapid start system and the full scale system. These configurations are described in Section 1.3. Except for the Venturi and Bubble Tray Scrubbers, which were not used in the full scale system, all the equipment used in the rapid start system was used in the full scale system.

The rapid start system was not as well documented as the full scale system because the computer data logging system was not yet installed. In the rapid start, operations data were logged manually every hour. A stack test was performed on both systems, and comparing the operation of the two systems provides significant insight into the effectiveness of the equipment.

3.1 Rapid Start System

The rapid start system operated from July 11 to mid-September 1995. The stack test was started immediately after start-up and completed by the end of July. The data logs during the period of the stack test are shown in Appendix B. Figure 3-1 is a Process Flow Diagram (PFD) of the rapid start system. The corresponding material balance is shown in Table 3-1.

3.1.1 Feed Preparation and Rotary Kiln Reactor

The crusher, pug mill, and reactor feed conveyor were outside. A cover was built over the reactor feed conveyor and hopper to protect it from the rain, but wet soil was a continuous problem. Wet soil would build up and plug the crusher, and at times would be wet enough to run off the conveyor belt. Most of the material processed was coral, which is much easier to handle wet than clay and other soils. The coral is soft enough to crush easily, and the fact that the material processed was largely coral helped significantly.

Blocks of consolidated coral were excavated that were too large to go into the crusher. A jack hammer that mounted on the excavator boom was not available at that time, so these large blocks of contaminated coral were stockpiled and processed during the full scale operations when the jack hammer attachment had been procured.

Sodium bicarbonate was added to the pugmill during the rapid start operation, but the amount added was not monitored on a regular basis.

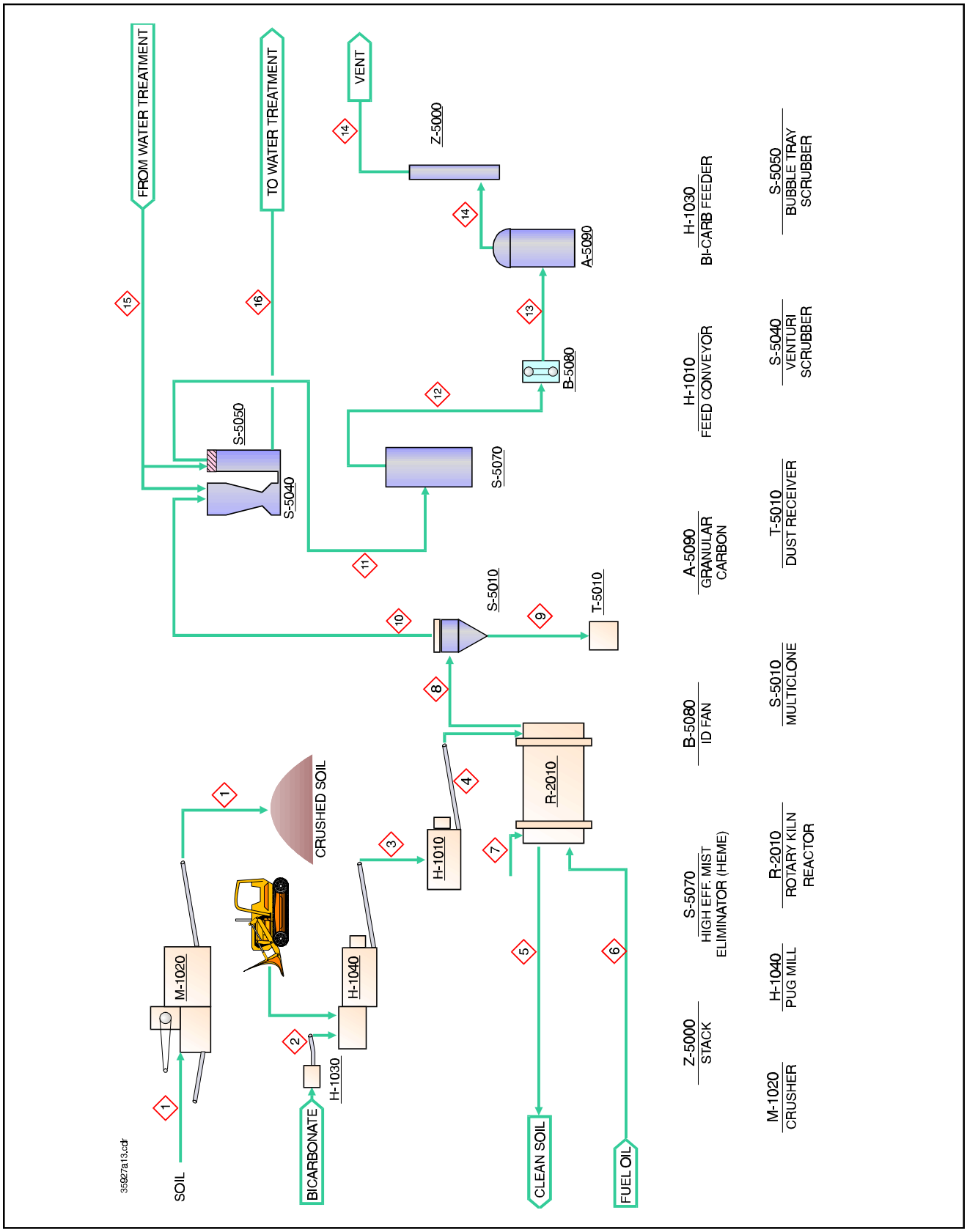

Figure 3-1
Rapid Start System Process Flow Diagram

Table 3-1
Rapid Start System Material Balance

Stream Number	1	2	3	4	5	6	7	8	9	10	11	12	13	14	15	16
Stream Name	Feed Soil	Sodium Bicarbonate	Feed Soil	Reactor Feed	Reactor Product	Fuel Oil to Kiln	Sweep Air	Reactor Off-Gas	Multiclone Fines	Multiclone Off-Gas	Scrubber Off-Gas	HEME Off-Gas	ID Fan Outlet	Carbon Off-Gas	Scrubber Water In	Scrubber Water Out
Dry Soil, lbs/hr	37,398		37,398.0	1,224.0	1,220.4			3.1	1.6	1.55	0.0775	0				
Percent Moisture	10		10.0	10.0												
Bicarb., lbs/hr		60.0	60.0	2.0												
Sodium Carbonate, lbs/hr					0.6			0.6		0.03						0.03
Water, lbs/hr	4,155		4,155.3	136.0			24.00	160.2		160.2	91.37	66.55	100.39	77.83	9,007.2	9,076.0
Nitrogen, lbs/hr							865.90	865.9		865.9	865.90	865.90	865.90	865.90		
Oxygen, lbs/hr							261.58	261.6		261.6	261.58	261.58	261.58	261.58		
Carbon Dioxide, lbs/hr								0.5		0.5	0.51	0.51	0.51	0.51		
Carbon Monoxide, lbs/hr								0.00		0.0	0.00	0.00	0.00	0.00		
Fuel Oil, gallons per hour						19.5										
Organics, lbs/hr	15		15.0	0.5				0.49	0.00155	0.49	0.25					0.24
PCB, lbs/hr	30		30.0	1.0				0.98	0.000465	0.98	0.49					0.49
Degrees F	90		90.0	90.0	560		90	450		240	120.00	110	123	115		120
Pressure, in. WC gage																
gpm, Normal															18	18
acfm, Normal							260	531		409	312	297	317	304		
lbs/hr, Normal	41,598	60.0	41,658.3	1,363.4	1,221.0		1,127.88	1,293.3	1.6	1,291.3	1,220.2	1,194.5	1,228.4	1,205.8	9,007.2	9,076.8
lbs/hr, Design Mix																

Notes: Stack gas is 235 dry standard cubic feet per minute and 0.03 percent CO_2.

Gas is assumed to be water saturated at the temperature indicated.

Organics were measured at the vent stack and PCBs were measured in the feed soil, multiclone fines, and vent stack. Values shown at other locations are assumptions.

The RKR could only be operated at about 0.6 tph because the wet feed would bridge and plug between the two knife gate valves at higher rates. The feed knife gates cycled three times per minute.

The kiln burners were greatly oversized for these slow feed rates. As many of the 14 burners as possible should be operated to provide uniform shell heating, but when all or most of the burners were operated they had to be turned down to their lowest firing point. At very low fire they were unstable and flame outs were common. They also coked up rapidly at low fire and had to be cleaned frequently. The operating technique that evolved to solve these problems was to only operate the four burners that were close to the four zone temperature thermocouples (measuring the temperature on the outside of the shell).

The RKR has a carbon steel shell, and the vendor recommends not exceeding a shell temperature of 1,000°F. Using only four burners, however, the zone temperatures (temperatures outside the shell) were raised to about 1,100°F to insure that the soil would be clean. Since the burners were operated directly below the thermocouples, these zone temperatures should be the hottest point on the shell. Zone temperatures during the rapid start run are shown in Appendix B.

The six thermocouples measuring the temperature inside the shell (Bed Temperatures) read erratically during the rapid start, only working part of the time (the instrument problem was solved by the time the full scale system started). When they did work, only the first five functioned. The bed temperature was typically over 700°F by the second thermocouple, about 10 feet from the soil feed end of the shell. Bed temperatures at thermocouples 4 and 5 were over 800°F and sometimes over 900°F. Producing a reactor product having less than the 2 ppm per PCB congener treatment limit was never a problem.

Sweep air was introduced at the soil discharge end of the kiln through a control valve that could be adjusted from 0 to 100 percent open. The demonstration run used exhaust gases from the kiln stack for sweep gas. Exhaust gases were not used for the production runs because of concerns that hydrocarbons from uncombusted diesel fuel would be drawn into the kiln.

The sweep gas valve was set at 50 percent open. This produced a stack flow of about 300 acfm, or about 230 dry standard cubic feet per minute (dscfm). As shown in Table 3-1, this corresponds to a sweep gas flow of 260 acfm at 90°F. This is a maximum value because it assumes no air infiltra-

tion between the kiln and the stack. The kiln cross section area is 6.7 square feet, so the sweep gas velocity in the hot end of the kiln at 800°F is 1.5 feet per second.

A minimum sweep gas is necessary to remove organics from the kiln as they are cooked off the soil. Sweep gas flows that are higher than this minimum will drag more fines out of the kiln into the APCS. These fines are contaminated and become residuals. No attempt was made during the rapid start to find this minimum velocity.

At each end of the rotating shell, a ware plate on the shell pressed against a stationary plate on the end breaches. The stationary plate was equipped with grease fittings, and a system was added to inject high temperature grease into this seal. Grease injection was also installed for the trunnion bearings. A set of idler trunnions, located at each end of the 30-foot-long shell, supported the entire weight of the shell.

When the kiln off-gas exited the rotating shell and entered the feed breech section, the gas velocity slowed significantly. Gas exited the breech section through a 6-inch duct. Fines dropped out and built up until the breech section was full, except for a pathway between the kiln shell exit and breech exit. As the pathway became smaller, the gas velocity increased until no additional fines dropped out. There was never a gas flow pressure drop increase in this area.

In addition to fines, feed soil also spilled out of the rotating shell into this breech area. At times, material would build up between the rotating shell and the stationary breech and create a drag on the shell rotation. At the end of the rapid start run, a 10-inch gate valve was installed in the bottom of this breech section to drop these fines out. The material collected at this point was returned to the Feed Preparation Building to be recycled into the kiln.

3.1.2 Air Pollution Control System

The rapid start APCS operated acceptably, but it did not achieve the emission reduction of the full scale system. The performance of the rapid start and full scale systems were consistent with the design basis discussed in Section 2.3 of this report.

The APCS, from the kiln to the ID Fan, operates under vacuum to insure that contaminated gases do not escape to the environment. If any leaks occur, air will leak into the system. The actual air infiltration rate was unknown during the design phase of the project, and the initial design of the

APCS assumed an air infiltration rate throughout the APCS that was much greater than what was actually encountered. As a result, the components of the APCS are greatly oversized. Most of the equipment still operated acceptably. The impact of the oversizing on individual equipment items is discussed below. Off-gas ducts were also much bigger than necessary. Where these ducts handled a gas flow high in particulate, particulate settled in the duct until the cross sectional duct area was reduced. This created a velocity high enough to prevent any additional settling. No pressure drop problems were encountered in the gas ducts.

Multiclone. As discussed in the previous section, fines removal from the off-gas started in the RKR soil feed breech. Immediately after exiting the RKR the off-gas passes through a three-cone Multiclone. The Multiclone was insulated and the cone section, where the gas is stagnant, was electrically heat traced. The Multiclone was designed to operate at a pressure drop of 4 inches of water at a gas flow of about 700 acfm. The actual gas flow during the rapid start was about 500 acfm and the Multiclone pressure drop typically ran between one and two inches of water. Although not quantified, the lower-than-design gas flow and pressure drop reduced the fines removal efficiency of the unit.

Fines exiting the Multiclone dropped through a flexible bellows into a 55-gallon drum. A gate valve in the drop out line was normally open and closed when the fines collection drum had to be changed. Since the fines collection rate was less than a drum per day, this system was satisfactory. A rotary valve was later placed on the Multiclone discharge to help insure that no air was leaking up into the Multiclone. Air leakage at the unit's solids discharge port will re-entrain fines and reduce the efficiency of the unit. The rotary valve plugged from time to time and had to be manually cleared.

Venturi and Bubble Tray Scrubbers. From the Multiclone, the off-gas flowed into the Venturi Scrubber and from there immediately into the Bubble Tray Scrubber. The Venturi removed most of the dust remaining in the gas stream and some of the organic aerosols. The removal efficiency of the Venturi increases as the pressure drop increases. Initially, the Venturi was operated at a pressure drop of about 20 inches of water, but after about two weeks that was raised to 40 inches of water. The pressure drop was controlled by manually adjusting the venturi plate in the throat of the scrubber.

Normally, most of the pressure drop in the APCS was caused by the scrubber. The ID Fan was controlled by the kiln vacuum, which was normally set at just under one-half inch of water. When

the kiln soil feed valves plugged, both knife gates were opened so the operator could manually clear the plug. With both valves open, the vacuum in the kiln fell to zero and the ID Fan responded by speeding up. This increase in flow rapidly increased the pressure drop across the Venturi to about 80 inches, and that in turn opened the vacuum relief valve on the ID Fan inlet. An operator would have to manually open the venturi plate to lower the pressure drop back to the control point. When the kiln feed valves were returned to normal operation the Venturi pressure drop was too low until the venturi plate was manually closed. After the rapid start run, a pneumatic throat adjustment was installed on the Venturi to solve this problem. The throat adjusted automatically to maintain a preset pressure drop.

While the throat adjustment allows the Venturi to operate efficiently over a wide range of gas flows, the Bubble Tray Scrubber is not adjustable and has a narrow range of gas flows over which it operates efficiently. Because the system never operated close to the design flow range, the Bubble Tray Scrubber was not effective.

HEME. From the scrubber, the gas flowed to the HEME. The HEME was designed for flows up to 700 acfm, much higher than the flows it normally experienced. The HEME, however, has infinite turndown. In fact, it operates more efficiently at lower flows. If the gas flow exceeds the design rating, it is possible for the gas passing through the HEME to entrain liquid and carry it out in the gas stream. Because the HEME was oversized, this entrainment and carry-over was not a problem.

As aerosols collect in the HEME, they drain to the bottom of the element and then from the element into the HEME tank. During the rapid start, a water seal was used in the drip leg from the HEME element. No significant amount of organics were collected. The water did turn a light brown color, but no free oil, floating or sinking, was detected. Water did condense out of the hot, saturated gas stream leaving the scrubber and accumulated in the HEME tank.

Without the WESP, the bulk of the aerosol removal was done in the HEME. The rapid start system started up on July 11, and the first HEME failure occurred a week later at 2400 hours on July 18. Failure occurs because of a buildup of material in the HEME that plugs the HEME. This buildup is marked by an increase in the pressure drop across the HEME. Even with a pressure drop up to 1 pound per square inch (psi), the HEME is still cleaning gas effectively, but once pressure starts to build, it increases rapidly to a point where it is not practical to continue operating the unit.

Mechanical damage to the HEME element begins when the pressure drop is about 28 inches of water (1 psi) — the fabric starts to tear and implode.

Figure 3-2 is a plot of the gas flow rate and the HEME pressure drop during the first HEME unit's last 90 hours of operation at the beginning of the rapid start run. During the first 5 days of operation, the pressure drop stayed below 10 inches of water. During the 6th day of operation, the pressure drop increased to around 20 inches of water, and on the last day it climbed rapidly to 60 inches. The gas was then switched to a new element, and the pressure drop immediately fell to about 2 inches of water. This general pattern of failure was repeated throughout the rapid start run. The HEME would normally operate at a pressure drop below 10 inches. Once the pressure drop started to increase, the rate of increase would be rapid and failure would occur within a day or two.

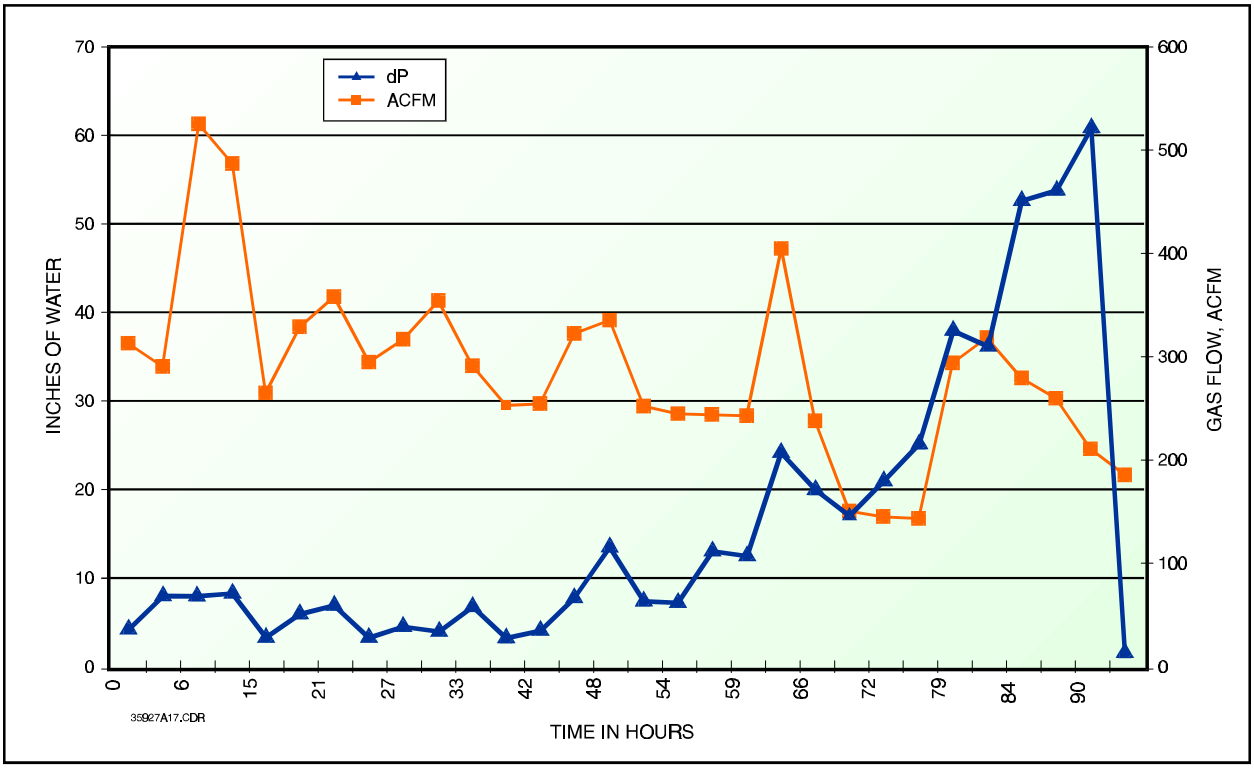

Figure 3-2
Gas Flow Rate and Pressure Drop During the First HEME Unit's Last 90 Hours of Operation Starting at 0600 Hours on July 14, 1995 (Rapid Start)

Figure 3-2 also shows, as expected, that pressure drop is a function of the gas flow rate through the unit. As the gas flow increases, the pressure drop increases. Flow through the element is laminar,

not turbulent, so the pressure drop should vary linearly with the flow. The last data point on Figure 3-2 was recorded after the off-gas was switched into the new HEME.

HEME elements installed later during the rapid start lasted longer, from two to three weeks. The short life of the first HEME was probably due to the erratic equipment operation that is to be expected during start-up of a first-of-a-kind system. As operating experience was gained, the cyclone and scrubber ran smoother and reduced the load on the HEME. As will be discussed later, once the full scale system with the WESP and steam sweep were installed, HEME life became very long. The full-scale system operated for 10 months with the same HEME and a pressure drop below one inch of water.

Experience with the rapid start system confirmed one of the predicted advantages of the HEME. It provides a secure barrier against the release of contaminated gases. If APCS equipment before the HEME operates poorly, the HEME's life will be shortened, but the gas will still be cleaned. Recall that the rapid start system stack test was performed during the start-up period, with favorable results.

The HEME was covered with a prefilter bag to catch particulate that would otherwise enter and plug the HEME element. The prefilter bag cost $300 and took two operators about two hours to replace. The element cost $2,400 and required two operators about 6 hours to replace. These changeouts were done in Level C. It was discovered, however, that replacing the prefilter bag did little to extend the life of the HEME. New bags and elements are white. When the element was pulled from the failed unit, both the outer bag and the element were brown, and the element was brown on both sides, indicating that organics had penetrated the bag and soaked into the element.

The HEME element cage was pulled out of the HEME tank using an electric wench mounted on an I-beam. The I-beam was installed about 7 feet above the roof of the APC building directly over the HEME tanks. A hatch was cut in the roof above the HEME tanks that could be removed to pull an element. The element was pulled straight up to clear the tank, then moved to one side of the tanks and lowered to the floor.

During start-up of the full scale system in March and April 1996, the rapid start configuration was occasionally used because of start-up problems with the new equipment. At that time, the steam boiler was installed and operating. The HEME vendor had reported that they had customers using HEMEs to collect wax mists. When these elements plugged, they were taken off line and heated

with steam. The heat reduced the viscosity of the wax sufficiently for it to drain out of the element. A material's viscosity will determine whether or not it will drain from a HEME. Since the viscosity of the material that would be collected on the BCDP HEME was unknown during the design phase, the flexibility of using steam to clean the HEME was designed into the system by specifying fiberglass elements that could stand temperatures over 200°F. Unfortunately this could not be tried during the rapid start system because there was no source of steam.

In early April, a one-half inch steam hose was run from the boiler to a plugged HEME. All the nozzles on the HEME tank were valved off except for the element drain nozzle at the bottom of the tank. Low pressure (15 psig) steam was injected into the HEME tank through a nozzle near the bottom of the tank. Condensate drained out of the element drain into a bucket. The tank drain valve was opened periodically to drain the tank. These condensates were put into a 55-gallon drum. The condensate from the element was yellow, and the tank condensate was clear. After about an hour, the temperature at the top of the tank reached 206°F and stayed at that temperature. Over a 24-hour period, 42 gallons of condensate were collected in the condensate drum. There was only a slight oil sheen on the surface of the condensate. A sample was analyzed to determine if the liquid could be added into the water treatment plant. The condensate contained low levels of PCBs and biphenyl and was returned to the water treatment plant. It was an oversight that the condensate was not examined for sinking (heavier than water) organics.

The pressure drop across the HEME fell back to its normal operating range after the steaming. A full evaluation of the success of this procedure could not be made because the full scale system came back on-line and operated for the rest of the remediation period. The load on the HEME was so low during full scale operations that no pressure drop increases occurred.

ID Fan. Because of the Venturi Scrubber, the ID Fan drew a much higher vacuum during the rapid start run than during the full scale plant operation. When both RKR knife gate valves were opened to clear a feed plug, the RKR vacuum would drop causing the ID Fan to speed up. This increased gas flow across the throat of the Venturi Scrubber caused the scrubber pressure drop to increase rapidly, damping the effect of the increased Fan speed on the vacuum in the RKR, and sometimes activating the vacuum relief valve on the ID Fan before opening the RKR feed valves.

The solution was to switch the Fan from automatic to manual operation and manually open the Venturi Scrubber throat before opening the feed valves. This allowed the ID Fan to pull a higher

volume of gas without an excessive pressure drop. The increased gas flow was necessary to keep gas from escaping the RKR through the open knife gate valves while they were being cleaned. The Venturi throat was returned to its original setting after the feed valves were returned to normal operation.

No mechanical problems were encountered with the ID Fan; it operated smoothly during the entire rapid start. This rotary lobe fan depends on close clearances between the rotating lobes and fan casing to provide a seal. If any particulate a few thousands of an inch in size or larger were to enter the fan, it would erode the fan at these seal points. No indication of such erosion occurred, indicating that the rapid start APCS was doing a good job of removing these particulate.

Air Carbon Bed. Because the chiller condenser was not available, water continuously condensed and dripped out of the air carbon beds. Drain valves on the bottom of the carbon beds were periodically opened to drain the beds.

At the end of the rapid start run, the air carbon vessels were emptied and sampled. The PCB concentrations in the carbon were:

- Inlet to the first carbon bed 800 ppm
- Inlet to the second carbon bed 12 ppm
- Outlet of the second carbon bed 1.2 ppm

The 12 ppm sample is after the off-gas passed through 600 pounds of carbon, and the 1.2 ppm sample is after the gas passed through the entire 1,200 pounds of carbon. The total quantity of PCBs captured by the carbon can be estimated by assuming that the drop off in concentration is linear (it is obviously much faster than that, so the linear assumption will give a high value for total PCBs in the carbon).

The amount of PCB in the first 600 pounds of carbon is approximately:

$$[(800 + 12)/2] * 10^{-6} * 600 = 0.24 \text{ pounds}$$

The quantity of PCB in the second carbon drum is:

$$[(12 + 1.2)/2] * 10^{-6} * 600 = 0.004 \text{ pounds}$$

During the rapid start run, about 500 tons of soil was processed with an average concentration of 50 ppm PCB, thus the quantity of PCBs removed from the soil during the rapid start was:

$$500 \text{ tons} * 2000 \text{ pounds/ton} * 50 * 10^{-6} = 50 \text{ pounds}$$

The stack test results will be discussed later, but the PCB stack emissions during the rapid start were 776 micrograms per hour. Over a 60-day period this would amount to:

$776 * 10^{-6}$ grams/hr * 1 pound/454 grams * 60 days * 24 hours/day = 0.02 pounds of PCB emissions.

Thus out of the 50 pounds of PCB that were driven off the soil, 0.24 pounds (0.5 percent) were removed in the carbon, 0.02 pounds (0.04 percent) escaped in the stack gas, and the remaining 49.74 pounds (99.5 percent) were either destroyed or removed before the carbon.

The carbon, as designed, was for final polishing, and most PCB removal occurred in the APCS prior to the carbon. The soil treated during the rapid start was relatively low in PCB. As explained in the APCS design theory (Section 2.3), higher concentrations of PCB in the soil should result in greater PCB condensation and a higher percentage removal in the APCS prior to the carbon.

3.1.3 Wastewater Treatment Plant

The rapid start WWTP was similar to the full scale system, but the clarifier and variable speed flocculation mixer were not yet installed. Wastewater was fed directly to Tank S6020 (Appendix A), and the surge tank was used as the clarifier. Wastewater was introduced into one end of the surge tank, and the clarified water was pumped out at the other end of the tank.

An agitator from the demonstration plant was used in the flocculation tank, but the agitator was a constant speed unit and its speed was too high to create a good floc. A good floc could be achieved in the laboratory. Most of the floc settled well, but some floc stayed in suspension, apparently because of low levels of light, non-water soluble organics attached to some of the particulate. Acid addition to samples in the laboratory to drop the pH from 8 to 6 would sometimes create an oil sheen

on the surface of the sample, indicating that oil was bound in the water as an emulsion. A pH adjustment and decant system was later added to the water entering the WWTP, but no oil was ever separated. Lowering the pH to around 6 did appear to aid settling.

Although most of the solids settled in the clarifier, enough passed through the clarifier to slowly plug the carbon vessels. Most of the water was recirculated from the clarifier directly back to the scrubber. The water took on a brown color and developed a distinctive organic odor, indicating that soluble organics were building up in the water. This same odor had been detected during the demonstration runs.

Initially, treated water was accumulated in day tanks and tested prior to discharge to the sanitary sewer. The treatment limit was 1 part per billion (ppb) PCB. Although levels below 5 ppb were attainable without great difficulty, the 1 ppb limit was not easily achieved. This problem was solved by spraying the water on the reactor product for cooling and dust suppression to eliminate the water discharge.

3.1.4 Rapid Start Stack Test Results

The rapid start stack test was conducted from July 13 to July 23, 1995, immediately after the July 11 start-up. The complete stack test report is shown in Appendix E, and the plant operating conditions during the stack test are in Appendix B.

A discussion of hazardous waste incinerator emission limits and guidelines on comparing BCDP emissions to incinerator emissions are provided in Section 3.2.4.

PCB Emissions. The PCB concentration in the stack gas was 2.74 micrograms per cubic meter with a mass emission rate of 776 micrograms per hour. The stack flow was 210 acfm (167 dscfm) at 111°F.

These actual PCB emissions can be compared to the predicted emissions as calculated in Section 2.3.1. Using the regression equation from Section 2.3.1, the vapor pressure of Arochlor 1260 at 111°F is:

$$p = \exp(-14921.6*(1/(111+460))+15.00) = 1.46 * 10^{-5} \text{ psia}$$

The gas is water saturated, and at 111°F will contain 0.061 pounds of water per pound of dry air. Based on 100 pounds of gas, the mole fraction water can be calculated.

Pounds of water = 100 * 0.061 = 6.1 pounds
Pounds of air = 100 - 6.1 = 93.9 pounds

Moles of water = 6.1/18 = 0.339
Moles of air = 93.9/29 = 3.24

Mole fraction water = 0.339/(0.339 + 3.24) = 0.0947

The molecular weights of water, air, and Arochlor 1260 are 18, 29, and 352, respectively. The weight fraction of PCB in the gas is calculated as follows:

Basis: 100 moles

$100 * 1.46 * 10^{-5}/14.696 = 9.93 * 10^{-5}$ moles of PCB
100 - 0.000146 = 99.999854 moles of water and air
99.999854 * (1 - 0.0948) = 90.52 moles of air
99.999854 * 0.0948 = 9.48 moles of water

Pounds of PCB = $9.93 * 10^{-5} * 352 = 0.035$ pounds
Pounds of air = 90.52 * 29 = 2,625 pounds
Pounds of water = 9.48 * 18 = 170.6 pounds
Total pounds of gas = 0.035 + 2625 + 170.6 =2795.64

The predicted weight fraction of PCB in the gas during the stack test is:

$0.035/2795.64 = 1.25 * 10^{-5}$ pounds PCB/pound gas

The actual PCB concentration in the stack gas was 2.74 micrograms per cubic meter. One cubic meter contains 35.31 cubic feet, and one pound mole of gas at 32°F and one atmosphere occupies 359 cubic feet. At 111°F a pound mole of gas occupies:

359 * ((111 + 460)/(32 + 460)) = 416.6 cubic feet

The density of the gas is:

$$2795.65/100 = 27.95 \text{ pounds/mole}$$

$$(27.95 \text{ pounds/mole})/(416.6 \text{ ft}^3\text{/mole}) = 0.0671 \text{ pounds per cubic feet}$$

A cubic meter of this gas would weigh:

$$0.0671 \text{ pounds/ft}^3 * 35.31 \text{ ft}^3\text{/m}^3 = 2.37 \text{ pounds per cubic meter}$$

The PCB in a cubic meter of stack gas was measured at:

$$(2.74 * 10^{-6} \text{ grams/m}^3)/(454 \text{ grams/pound}) = 6.04 * 10^{-9} \text{ pounds per cubic meter}$$

Thus, the PCB concentration in the stack gas was:

$$(6.04 * 10^{-9} \text{ lbs/m}^3)/(2.37 \text{ lbs/m}^3) = 2.55 * 10^{-9} \text{ pounds PCB/pound gas}$$

The measured concentration is 4,900 times less that the predicted concentration, $1.25 * 10^{-5}$ pounds PCB per pound gas. There are two possible reasons for this difference: the theoretical model does not include the carbon, which removed PCBs prior to the stack, and the APCS equipment may remove PCBs at a higher rate than predicted (for example, by the solubilization of PCB vapor in other organics). Some insight can be gained by considering mass emissions.

The stack flow was 210 acfm, so the predicted PCB mass emission rate was:

$$210 \text{ acfm} * 60 \text{ minutes/hour} * 0.0671 \text{ lbs/ft}^3 * 1.25 * 10^{-5} \text{ pounds PCB/pound gas}$$
$$= 0.01057 \text{ pounds PCB per hour}$$

The measured mass emission rate was:

$$210 \text{ acfm} * 60 \text{ minutes/hour} * 0.0671 \text{ lbs/ft}^3 * 2.55 * 10^{-9} \text{ pounds PCB/pound gas}$$
$$= 2.16 * 10^{-6} \text{ pounds PCB per hour}$$

Over the 60-day period of the rapid start, the total unexplained PCB removal is:

$$60 \text{ days} * 24 \text{ hours/day} * (0.01057 - 2.16 * 10^{-6}) \text{ pounds PCB/hour} = 15.2 \text{ pounds PCB}$$

This is well above the 0.25 pounds of PCB that was found in the carbon at the end of the rapid start run. It would appear that the APCS removes significant quantities of PCBs by methods other than vapor condensation.

Dioxin Furan Emissions. The average TEQ dioxin/furan concentration in the stack was 2.15 nanograms per cubic meter with an average stack gas flow of 275 dscfm.

Hydrochloric Acid Emissions. Hydrochloric acid concentration in the stack gas was 0.057 grams per cubic meter with a stack gas flow of 159 dscfm. Mass emissions were 15 grams per hour.

Volatile and Semivolatile Emissions. Semivolatile emissions were insignificant. The total volatiles concentration detected in a Summa canister grab sample were 8 ppm. The largest concentrations were propylene, 4 ppm, and acetone, 2.8 ppm. Benzene was present at 0.34 ppm. For comparison purposes, the OSHA Permissible Exposure Limit for benzene is 1.0 ppm (time weighted average for breathing air in a workplace).

3.1.5 Treatment of High Organic Soils and KPEG Residuals

The soil treated during the rapid start run averaged 50 ppm PCB and was coral with a very low organic content. Two tests of high organic material were made during these runs. The first test was to feed soil that was high in organic and PCB content to the kiln for about 8 hours. The second test consisted of feeding residuals from the 1988 KPEG operations for about 8 hours. These residuals were PCB free, but they contained high organic soil mixed with 400 molecular weight PEG.

As discussed previously, the off-gas can be viewed through a plexiglass plate that is bolted over an access hatch on the Bubble Tray Scrubber. When coral was processed, the off-gas at this point could not be seen — the gas was clear. When the high organic soil and KPEG soil were processed, the off-gas had the appearance of a dense, white fog. When a focused beam of light from a 6-volt flashlight was directed through the plexiglass, the beam was clearly visible, although the back of the scrubber vessel (about 2 feet away) was not visible.

This observation is consistent with the theory that organic aerosols are created when organics are cooked off of the soil in the kiln. The coral was so low in organics that it did not release a visible "fog." The high organic material did release an aerosol of micron size organics. When a focused beam of light is passed through an aerosol, the beam is visible because the micron size particles scatter the light. This is known as the Tyndall effect. During the full scale operation, this test was used to evaluate the operation of the WESP during the treatment of high organic soil. When the WESP was operating well, the off-gas was clear and the light beam was invisible. When the WESP was down, or operating at low voltage because of some upset, the light beam was visible.

An oil sheen developed on the wastewater indicating that the Venturi Scrubber was removing some of the organics. The HEME pressure drop increased several inches, then returned to normal several hours after the high organic run was finished. This is consistent with the operating theory of the HEME — organics are collected in the fabric and then drain to the bottom of the HEME element.

3.2 Full Scale System

The full scale system operated just over a year, from April 1996 to May 1997.

Appendix A contains the Plot Plan, P&IDs, and the PFDs for the full scale system. The Plot Plan is a scale drawing of the process area and provides dimensions for the buildings, equipment, and other physical components at the BCDP site. The P&IDs contain detailed system information including the size and material of construction of the equipment, piping, pipe fittings, instrument locations, etc. The flow rate, composition, temperature, and pressure of material flows in each step of the process is provided in the PFDs.

A sample of operating data from the data logger is shown in Appendix C.

3.2.1 Feed Preparation and Rotary Kiln Reactor

Soil Excavation and Handling. The excavation plan is part of the work plan. Excavation was performed with a track excavator with a 1.25 cubic yard bucket. A jack hammer attachment was available that could be mounted on the end of the excavator boom to break up coral. Consolidated coral was excavated by using the hammer to break up a layer of the coral. The jack hammer was then changed out for the bucket and the coral was picked up.

A five-ton dump truck was used to haul contaminated soil from the excavation area to the soil conditioning area behind the Feed Preparation Building. The truck was decontaminated at the end of each day when it was used to haul contaminated soil. Because the Guam BCDP was a small unit, excavation was much faster than soil processing, and only occurred a few days each month.

Excavated material was stockpiled behind the Feed Preparation Building. If the material was too wet to crush, it was spread out on the ground on sunny days and turned every half to one hour using a track loader with a 2.5 cubic yard bucket. The loader would drag the soil with the bucket teeth. If this were a larger site, the soil could have been turned more efficiently with a set of disks. A rubber-tire loader was initially used to work the soil, but the sharp coral damaged the tires and forced the change to a track loader.

Soil moisture was the most important factor effecting production. Wet soil could not be crushed because it would plug the crusher. For periods lasting several days or weeks at a time, the RKR was run at rates under 1 tph because there was not sufficient dry soil to crush.

A two cubic yard rubber-tire front-end loader was dedicated for use inside the Feed Preparation Building. This loader hauled material between the soil stockpile area and the building and loaded the crusher and RKR feed hopper.

A rubber-tire front-end loader was used for clean work such as moving the reactor product from the product storage bins to the treated soil stockpile area. The dump truck was also decontaminated and used to haul treated soil as necessary.

A small rubber-tire loader that could be equipped with either forks or a half cubic yard bucket was used to move equipment, pallets, and drums of residuals.

Feed Preparation Building. The Feed Preparation Building housed the crusher and RKR feed hopper. The Pug Mill was not used in the full scale system. The sodium bicarbonate was added to the soil as it traveled up the conveyor belt to the RKR and mixed with the soil in the RKR.

The Feed Preparation Building was the only Level C (respirator and tyvek) area in the plant. Normally, two operators would be required in the Feed Preparation Building for safety reasons. A pan and zoom camera was mounted inside the building above the roll-up door that could monitor

the activities inside the building. The camera transmitted to a monitor in the control room. This allowed an operator to work alone in the building while his activities were monitored from the control room.

A second camera was mounted over the RKR feed hopper so the control room operator could see the soil level in the hopper. The camera would also show if the hopper was bridging or plugging. A vibrator on the side of the hopper could be activated from the control room to free a hopper plug.

The RKR feed hopper initially held five cubic yards. The bucket on the front-end loader used in the Feed Preparation Building was wider than the hopper and would spill material when dumping into the hopper. Plywood was used to build up and widen the walls of the hopper and increase the capacity to about nine cubic yards. To insure that the hopper never ran empty while the RKR operated, the hopper was never allowed to fall much below half full.

Rotary Kiln Reactor. The RKR performed well during the remediation period. There were periodic problems with soil working between the feed breech and the rotating shell. This created friction on the rotating shell forcing the unit to be shut down so the breech could be opened and the soil cleaned out.

The soil drop chute installed at the bottom of the feed breech between the rapid start and full scale runs worked well and helped to minimize the soil buildup problem. Feed soil and fines from the feed breech were collected in a 55-gallon drum and recycled to the Feed Preparation Building and mixed with the RKR feed soil. The rate at which this material accumulated varied from two or three times a day to less than once a day, depending on the soil being processed and how the RKR was operated. At rates of one tph or less, very little feed soil was collected. As feed rates were taken higher, more feed soil spilled into the breech.

The BCDP's capacity was determined by the RKR operating rate. Table 3-2 shows the monthly average system production rate and on-line percent during the full scale system operation. The Tons per Hour is the average processing rate while the plant ran during the month, and the On-Line Percent is the percent of time during the month that the plant operated.

Table 3-2 Operating Rate and On-Line Percent During Full Scale Operations			
Month	**Tons Per Hour**	**On-Line Percent**	**Tons Produced**
April, 1996	1.12	93%	719
May	1.63	85%	1032
June	1.85	81%	1085
July	1.28	76%	729
August	1.04	96%	742
September	1.22	64%	564
October	0.93	98%	674
November	1.00	32%	232
December	1.45	91%	989
January, 1997	1.25	90%	843
February	1.54	93%	963
March	1.43	95%	1009
April	1.72	68%	849
May 6, 1997	2.23	90%	336

Rates were low in April because the system was still having start-up problems. May and June production was high, then the rates fell off from July through November. These are the rainy season months, and rates were reduced because there was a shortage of dry feed. November was an especially bad month. A typhoon hit Guam, and the plant was shut down for the storm and then for repairing storm damage. A scheduled maintenance outage also occurred during this period. As soon as the plant started up, the variable speed drive on the RKR shell motor failed and a new controller had to be ordered from the mainland. It took almost a week to get the controller ordered and shipped to Guam.

The RKR diesel burners were oversized, even at rates approaching 2 tons per hour. The four zones were typically operated at or slightly above 1,100°F. Although operating instructions for the RKR warned against operating the zones above 1,000°F, the extended operation at higher temperatures did not cause a problem. The danger of operating too hot is that the shell, which is only supported at each end of its 30 foot length, can weaken and physically sag.

3.2.2 Air Pollution Control System

The full scale APCS achieved much lower emissions than the rapid start system.

Like the rapid start system, the full scale system operated under vacuum from the RKR to the carbon, and air infiltration rates were much lower than predicted. Gas flows were much lower than predicted. Except for the Venturi Scrubber, which was not used, the equipment in the rapid start APCS was used in the full scale APCS. During the rapid start, the Venturi Scrubber was operated at a pressure drop of about 40 inches of water. Without this unit in the full scale system, the highest vacuum in the system was about 6 inches of water. Although it cannot be quantified, the reduced vacuum would have reduced any air infiltration at leak points.

Multiclone. The multiclone operated even less efficiently in the full scale system than in the rapid start because of lower gas flows. The pressure drop was typically below one inch of water, compared to the design of four inches. The pressure taps plugged frequently and had to be manually opened. This is not an uncommon problem, and should be kept in mind when looking at the pressure drop on the data logs.

The quantity of multiclone fines generated during the remediation is given in the residuals discussion at the end of this section.

WESP. The RKR off-gas enters the WESP at the quench unit, mounted on the side of the WESP. In the quench, water recirculating from the WESP sump is sprayed into the off-gas to water saturate the gas. Since the pressure is close to one atmosphere, the temperature will be at or below 212°F when saturation occurs.

Steam is also injected into the quench section. The steam flow rate is controlled by the WESP outlet gas temperature. As explained in Section 2.3.2, the objective is to maintain a water saturated gas in the WESP at a high enough temperature (above 198°F) so that the oxygen content will be too low to support combustion.

Water from the WESP sump was continuously recirculated to the quench nozzles and to the nozzles below the WESP tubes. A blowdown from this recirculation water went to the WWTP. A level controller in the WESP sump opened a solenoid valve to add make-up water to the sump as needed to maintain the level.

When the plant started up, the WESP blowdown was one gpm. At this blowdown rate, under 100 pounds per hour of steam was required to maintain the WESP temperature. The blowdown was

increased over the following months to reduce the solids level in the WESP. At a blowdown of around 10 gpm, 400 to 500 pounds per hour of steam was required to maintain the WESP temperature because the higher blowdown increased the flow of ambient temperature make-up water to the WESP. The hot blowdown increased the temperature of the WWTP and an air cooled heat exchanger from the demonstration plant was installed to cool the blowdown.

Solids built up in the sump of the WESP requiring the WESP be taken off line and cleaned. This could be done without shutting down the plant by pumping the WESP sump down and flushing the sump with process or fresh water. During a standard maintenance shutdown, the WESP would be opened up and the sump completely cleaned out. The increased blowdown allowed the WESP to be kept on line several weeks at a time between cleanings.

The solids eroded the spray nozzles in the WESP causing them to be replaced once during the operations. The nozzles would also be plugged by the solids requiring the nozzle headers to be removed and cleaned during a system shutdown. During a maintenance shutdown, spray nozzles would be visually checked to see if any were plugged. Two Y strainers in parallel were installed in the WESP pump discharge in November 1996. These helped some by removing the larger particles from the water going to the spray nozzles.

The deluge wash system that sprayed down on top of the WESP tubes worked well, and was used a couple of times a month.

A black coating slowly built up on the WESP insulators during operation. This had to be physically cleaned off during a plant shutdown.

The WESP normally operated around 14,000 to 16,000 volts with a spark every 4 to 7 seconds. The highest voltage recorded was 20,000 volts. Excessive solids buildup inside the WESP or a buildup on the insulators caused the voltage to drop.

The first WESP recirculation pump was a chemical seal diaphragm pump. This pump had two diaphragms on each side of the pump separated by a colored liquid. A sight glass connected to the liquid filled area between the diaphragms allowed the operator to view the liquid. If the diaphragm on the air side of the pump failed, the liquid would be blown out. If the liquid side diaphragm failed,

the liquid would mix with the fluid being pumped and change color. A diaphragm failure would thus be visible to the operator.

A diaphragm pump was selected initially for two reasons. First, it was thought that the liquid coming out of the WESP would contain insoluble oils, and a low shear pump was desired to minimize the chance that an emulsion would form. The second reason is that there is very little NPSH available because of the high temperature of the water leaving the WESP. Diaphragm pumps have low NPSH requirements.

The chemical seal diaphragm pump was selected because a diaphragm rupture is a common failure mode for these pumps. A standard diaphragm pump has one diaphragm with the liquid being pumped on one side and compressed air on the other side. If the diaphragm ruptures, compressed air will be blown into the liquid side of the pump. In this application, that would result in air being blown into the WESP and possibly creating an explosive atmosphere. The chemical seal pump provides a warning if one diaphragm fails, and the pump can be shut down and repaired before the second diaphragm fails.

Operating experience with these pumps was very poor. The teflon diaphragms used on the fluid side of the pump failed within hours after start-up. The pump was tried two more times with the same results. The diaphragms were returned to the vendor, but no reason for their failure could be identified.

A standard diaphragm pump with a neoprene diaphragm was used for most of the BCDP operation. These pumps were still high maintenance, but would operate for weeks at a time between failure. Even though at times compressed air was probably blown into the WESP at the point of failure, there was never any sign that combustion occurred in the WESP. One safety factor was the automatic WESP power shut off at low WESP recirculation flow. A diaphragm failure would drop the pump output low enough to remove the spark (ignition source) from the WESP.

In an attempt to find a lower maintenance WESP pump, a progressing cavity pump was installed in November 1996. This pump operated for a month and a half, but cavitated most of the time generating severe vibrations in the discharge piping. When the liquid being pumped was at ambient temperature, the pump operated very smoothly, but as the WESP was brought up to operating temperature, the vibrations would start. For brief periods (several hours) at a time the pump would

operate smoothly, then start cavitating again. No explanation for these periods of smooth operation was found.

After a month and a half of operation the progressing cavity pump failed mechanically (caused by the cavitation) and the pump was replaced with a standard diaphragm pump. If the cavitation problem is solved, the progressing cavity pump is probably the best choice. A plan for eliminating the cavitation problem is provided in Section 6.0 of this report.

Before the WESP was started up, a decanter was built and installed in the WESP sump that covered about 20 percent of the footprint of the sump. Part of the water falling off the tubes would pass through the decanter and any floating or sinking material would be separated. Two pipes were run from the decanter through the wall of the WESP, one to decant sinking oils and one to decant floating oil. No oil was ever recovered, and the decanter filled with solids after a few weeks of operation.

WESP Safety System. An event occurred on September 9, 1996 that tested the WESP safety systems. The bottom of the kiln feed breech section has a 10-inch knife gate valve that is opened periodically to remove fines that collect in the breech. A 55-gallon drum is connected to this valve when it opens to collect the fines and provide a seal.

On September 9, 1996, this valve was opened at 0520 hours and left open until 0622 hours. No drum was in place to provide a seal. The system's response and recovery, shown in Table 3-3, was reconstructed using the control system historian.

Table 3-3
BCDP Operation Between 0520 and 0645 Hours on September 9, 1996

Time	lbs/hr WESP Steam	WESP Outlet Temperature	Fan (rpm)	Fan in Water	Kiln Exit Temperature	Cyclone Exit Temperature
520	256	205	255	5	366	302
525	279	205	260	5	367	302
530	326	204	322	7	359	302
535	387	204	364	9	357	301
540	391	203	404	10	355	301
545	407	202	445	12	353	300

Table 3-3 BCDP Operation Between 0520 and 0645 Hours on September 9, 1996						
Time	lbs/hr WESP Steam	WESP Outlet Temperature	Fan (rpm)	Fan in Water	Kiln Exit Temperature	Cyclone Exit Temperature
550	422	202	484	14	347	297
555	433	201	521	16	342	295
600	388	200	556	17	335	294
605	404	198	594	19	334	292
610	420	198	629	21	330	291
615	432	197	641	23	328	289
620	444	197	641	24	324	287
625	410	198	596	20	355	289
630	402	198	535	17	358	294
635	420	199	501	14	364	296
640	432	200	477	13	369	297
645	439	201	439	12	371	297

Notes: Kiln sweep stream was 105 pounds per hour.

Feed rate was 3,000 pounds per hour.

Feed is typically 10 percent moisture.

When the valve opened, the kiln vacuum which normally runs at about 0.4 inches of water, fell to zero and stayed between zero and a few hundredths of an inch of water vacuum. As soon as the vacuum was lost, the ID Fan automatically responded by speeding up to recover the vacuum. The ID Fan's response to any change in kiln vacuum is greatly damped. If the Fan is not damped, the rapid responses to changes in kiln vacuum will result in continuous over-correction by the Fan and create an unstable control condition.

The ID Fan speed steadily increased from 255 rpm to 641 rpm over a period of one hour. The kiln exit temperature dropped steadily over this hour because the kiln off-gas was being diluted with increasing amounts of outside air as the Fan speed increased. The WESP outlet gas temperature dropped, and as it dropped, the steam injection to the WESP increased from 256 to 444 pounds per hour. WESP steam injection rate automatically varies to maintain a set point temperature in the WESP outlet gas.

Twenty minutes into the event the WESP outlet temperature fell to 203°F and the low temperature alarm sounded. Forty-five minutes into the event the WESP outlet gas temperature reached 198°F and power to the WESP automatically shut down. At 0622 hours, the valve was closed and the system began to return to normal operating conditions.

Table 3-4 shows gas flows and oxygen concentrations in the WESP during this period. The stack flow meter was not operational during this period, so gas flow at the ID Fan was calculated from the pressure drop. Based on stack test data, at a pressure drop of 5 inches the Fan flows 17 standard cubic feet per minute (scfm). The flow was assumed to vary with the square root of the pressure drop ratio, i.e., at a pressure drop of 23 inches the flow is:

$$17 * (23/17)^{0.5} = 20 \text{ scfm.}$$

Table 3-4
Infiltration Air Flow and Oxygen Content of the Gas Entering and Leaving the WESP

Time	Fan (scfm)	Infiltration Air (scfm)	Steam (Moles/Min)	Air (Moles/Min)	Oxygen % Based On Flow	Oxygen % Based on WESP Temperature
520	17	0	0.61	0.04	0.68	2.14
525	17	0	0.63	0.04	0.66	2.14
530	20	3	0.68	0.06	0.95	2.48
535	23	6	0.73	0.06	1.07	2.48
540	24	7	0.74	0.07	1.15	2.82
545	27	10	0.75	0.07	1.29	3.16
550	29	12	0.77	0.08	1.40	3.16
555	31	14	0.78	0.08	1.15	3.50
600	32	15	0.73	0.09	1.65	3.84
605	34	17	0.75	0.09	1.74	4.52
610	35	18	0.76	0.10	1.81	4.52
615	37	20	0.78	0.10	1.89	4.86
620	38	21	0.79	0.10	1.91	4.86
625	34	17	0.75	0.09	1.78	4.52
630	32	15	0.75	0.09	1.62	4.52
635	29	12	0.76	0.08	1.41	4.18
640	28	11	0.78	0.08	1.32	3.84
645	27	10	0.78	0.07	1.24	3.50

Flow above 17 scfm was assumed to be infiltration air. Thus a Fan flow of 20 scfm implies 20 - 17 = 3 scfm of infiltration air. Infiltration air was also calculated based on the drop in kiln exit gas temperature and the results were similar to the flows shown in Table 3-4.

Oxygen percentage based on flow was calculated using the following information:

1. The oxygen content of the 17 scfm from the kiln is 10 percent based on the stack test.
2. Infiltration air is 21.9 percent oxygen.
3. Sweep steam flow was steady at 105 pounds per hour, 300 pounds per hour of water comes off the soil, and the WESP injection steam makes up the balance of the steam.

This oxygen percentage is shown in Table 3-4, along with the predicted oxygen temperature based on WESP outlet temperature.

The calculation of oxygen content based on flow assumes that no steam condensed in the WESP. This case shows oxygen content raising from 0.68 percent to 1.91 percent. Oxygen content based on saturation temperature shows a rise from 2.14 percent to 4.86 percent. Both sets of numbers indicate that oxygen levels were never high enough to form an explosive mixture during the event.

As a final sanity check on the numbers, there are four data points in Table 3-3 where the WESP outlet temperature is 198°F. The average steam flow for these points is 409 pounds per hour and the average calculated infiltration air is 16.75 scfm. At 198°F, air requires 1.92 pounds of water per pound of air to saturate. A 16.75 scfm flow is 1.28 pounds a minute, and this air would pick up 1.92 * 1.28 = 2.45 pounds per minute of water vapor via the steam. The observed increase in steam flow is (409 - 256)/60 = 2.55 pounds per minute. Again, the numbers agree with the design concepts.

The safety system to protect against leaks worked as designed. The damped ID Fan provides ample time for the system to react if a leak should occur.

Primary Condenser. The Primary Condenser operated well throughout the remediation. The only maintenance required was to pressure wash the tubes every few months. This was really preventative maintenance since the outlet gas temperature never rose above 85°F. The cooling tower

water inlet was consistently between 75°F and 80°F, and the cooling tower water outlet ran between 85°F and 90°F. The flow was not measured.

If the WESP had operated better, the Primary Condenser would have stayed cleaner. When the WESP is operating properly, almost no solids should be entering the Primary Condenser. With good WESP operation the condensate leaving the Primary Condenser was clear with no visible signs of solids.

Chiller Condenser. The Chiller Condenser operated well from the start-up until July 1996, when the compressor failed. The failure was caused by a leak in the ethylene glycol solution/freon heat exchanger. This leak allowed water to enter the compressor and the water caused the compressor failure. The replacement compressor and heat exchanger coils (which were replaced under warranty) were not received until January 1997. Since we were close to the end of the project and the repair would cost over $6,000, the unit was not repaired.

The Chiller Condenser dropped the off-gas temperature to between 40°F and 50°F. Most of the water in the gas was removed in the Primary Condenser, and very little additional water was removed in the Chiller Condenser.

HEME. The HEMEs operated well with almost no maintenance during the full scale operation. The combination of a clean feed gas from the WESP combined with a much lower gas flow kept the HEME pressure below one psi during the full scale production run from April 1996 to March 1997. Initially, the pressure drop was a few tenths of an inch. By the end of the production run, 11 months later, it was approaching one inch.

No liquids were collected in the HEME until the Chiller Condenser failed in July. After that, water collected in the unit at a rate of less than a gallon a day. The water was transferred to the WWTP.

Induced Draft Fan. Other than being oversized, the ID Fan operated without any problems. When the full scale system started up, a valve was cracked to bleed air into the inlet of the Fan. This bleed air system was replaced with a two-inch recirculation pipe with a throttling valve between the fan discharge and inlet before the June 1996 stack test. This reduced the stack flow from about 200 cubic feet per minute to less than 30 cubic feet per minute.

Carbon Beds. The carbon operated well with very little pressure drop through the full scale remediation. The system ran dry until the Chiller Condenser failed. After that, water condensed in the carbon and was periodically drained off.

Vent Stack. The vent stack was initially a 6-inch diameter CPVC pipe. The top 15 feet of the vent was replaced with a 1.5-inch CPVC pipe before the June 1997 stack test. The gas flow was too low to be measured in the 6-inch pipe.

3.2.3 Wastewater Treatment Plant

The physical improvements to the water plant caused it to operate better during the full scale production than in the rapid start system, but the plant still experienced a number of difficulties. Based on experiences with the Guam water plant, a different type of water plant should be used. An alternative design is discussed in Section 6.0 of this report.

As shown on the flow sheets in Appendix A, all incoming wastewater entered the Surge Tank. The flows to the WWTP were not uniform in flow rate or composition. The Surge Tank provided a more uniform concentration and flow to the WWTP. Although liquid entered the Surge Tank at different rates, the tank could "surge" the liquid and pump out to the water plant at a constant rate. If the water level in the Surge Tank got low, the pump out rate could be reduced or turned off until the level came back up.

The Surge Tank was equipped with air spargers to provide agitation. These spargers were only partially effective, and 12 to 18 inches of mud built up in areas that were not agitated well. The Surge Tank used two synthetic liners to obtain secondary containment, and was under roof to exclude rain water and keep the sun off the liner. The clarifier set in the Surge Tank and the Surge Tank provided secondary containment for the clarifier. By the end of the job (about two years after the installation of the tank), the outer liner was starting to fail.

A submersible sump pump transferred the water from the Surge Tank to S-6020. As explained earlier, this tank was initially installed to separate out heavy oils, but no such oils were ever encountered.

Water gravity flowed from S-6020 to the Flocculation Tank, T-6030. As shown in the P&ID, a half section of pipe was welded onto the side of S-6020 and the wastewater flowed up this pipe to leave

the tank. A high speed agitator was installed in this pipe and the polymer was added to the water below the agitator. This section of pipe served as a rapid mix tank where the polymer was blended with the wastewater.

A variable speed floc agitator in the flocculation tank produced a much better floc than the high speed agitator in the rapid start system. Although settling was improved, the clarified water still contained a significant quantity of suspended solids. There still appeared to be organics in the water that created particles that did not settle well. From time to time, an oil sheen could be seen on parts of the surface of the water in the Surge Tank.

Wastewater gravity flowed from the Flocculation Tank to the Clarifier. The Clarifier was made from a fiberglass tank obtained on the island. The bottom of the tank was flat, and a perforated pipe running across the bottom of the tank was used to pump off sludge. This sludge removal system did not work well — sludge would build up in the clarifier and have to be cleaned out during maintenance shutdowns. A commercial clarifier has sloped sides that funnel the sludge to a central removal point. The clarifier feed contained 400 to 800 ppm suspended solids, and the effluent ranged 25 to 70 ppm suspended solids.

Water from the Clarifier gravity flowed to the Clarified Water Tank, T-6065. Water from Tank T-6065 could flow two ways, either to the WESP as recycle water, or to the oleophilic and carbon drums. The steam condensate continuously added water to the system and made the plant a net water generator, so there was always sufficient water to recycle to the WESP. As excess water accumulated and the liquid level in Tank T-6065 went up, the level indicator on the tank automatically opened a bypass valve to pump water through the rest of the water treatment plant.

Sludge was pumped from the bottom of the Clarifier to the Plate and Frame Filter Press to be dewatered. Filtrate was originally sent to the Clarified Water Tank, but because of the poor settling in the clarifier, the filtrate was cleaner than the clarified water. The system was repiped so the filtrate could be pumped through the rest of the water plant. At the end of the filtration cycle, the plates on the filter press were opened and the cake was dropped into a bin directly below the press. These solids were shoveled into 55-gallon drums for disposal as contaminated residuals.

Water from the Clarified Water Tank and filtrate going to further treatment first passed through one of two bag filters operating in parallel. Seventy micron bags were used, and some solids removal occurred in the bags.

From the bag filters, the water went through two 55-gallon oleophilic media drums operating in series. These drums contained a mixture of anthracite and clay, and are specifically designed to remove mechanically emulsified and free oils from water. This material is much more effective than carbon for removing free oils. Because the water still contained solids, the oleophilic drums acted as particulate filters and plugged after a couple of weeks in service. They were not removed because they saturated with oil, but because of excessive pressure drop caused by the fines buildup.

From the oleophilic drums, the water passed through two Carbon Tanks operating is series. From the Carbon Tanks, the water went to the Treated Water Supply Tank. From this tank it was pumped to the RKR product conveyor and used to cool the reactor product. Water usage on the product belt exceeded the amount generated by the water plant, and potable water was added to the Treated Water Tank as necessary to maintain water in the tank.

A bypass operated by two solenoid valves, HV 666 B and C, was available as a backup so the WESP could be supplied from the Treated Water Tank if the Clarified Water Tank were not available.

Water treated through the carbon was clear, but water recycled to the WESP turned light brown and developed an organic odor, the same as in the rapid start run.

Other than the Clarifier and Surge Tank, all the tanks in the WWTP set in the 30-by-40-foot building. The building provided secondary containment for the tanks.

3.2.4 Stack Test Results

NFESC stack tested the BCDP in June 1996.

3.2.4.1 BCDP Emissions Compared to Incinerator Emission Standards

The actual regulatory requirements for the BCDP are undefined. The EPA has different standards for different types of incinerators (i.e., municipal waste, medical waste, hazardous waste, etc.), and the BCDP is not an incinerator. The most stringent standards are for hazardous waste incinerators, and those standards will be used as a reference point for the BCDP emissions.

The BCDP stack is cleaner than required by the hazardous waste incinerator standards in every area except for carbon monoxide and hydrocarbon emissions. VOC emissions were 1.12 tons per year. These emissions are not a problem on Guam, but may be in some parts of the U.S. If control of these compounds is required, a small thermal oxidizer at the end of the APCS would destroy 99 percent to 99.9 percent of the hydrocarbons and carbon monoxide. The thermal oxidizer would not be burning PCBs. Almost all the PCBs are removed at this point in the system.

PCB Emissions. PCB DRE was 7 nines. This is better than the TSCA requirement of 6 nines for a hazardous waste incinerator. Stack flow during the PCB test averaged 23 dscfm.

Dioxin Furan Emissions. Dioxin and furan emission standards are set by the Resource Conservation and Recovery Act (RCRA). RCRA uses a TEQ measurement that relates the toxicity of all dioxin and furan isomers to that of the most toxic isomer: 2,3,7,8-TCDD (or tetra-chlorodibenzo-p-dioxin). The hazardous waste incinerator discharge limit is 0.2 nanograms per cubic meter. The BCDP tested at 0.18 nanograms per cubic meter with an average stack flow of 21 dscfm. Again, the BCDP emissions were cleaner than required by the hazardous waste incinerator standard.

Unlike the PCB DRE, which is based on mass flow, the TEQ is based on concentration. This is reasonable for comparing incinerators. Similar sized incinerators should have approximately the same off-gas flow rate. The BCDP's APCS, however, was designed to minimize off-gas flow — incinerators are direct-fired and have much higher stack flows. The flow correction below compares the BCDP's TEQ to the incinerator emission standard.

Data relating stack gas flow to production rate in tph were gathered on three IT incinerators and are summarized below:

Incinerator	Gas Flow (dscfm)	Tons Per Hour Feed Rate	dscfm/tph
Sikes	17,095	46.6	367
Bayou Bonfouca	15,127	28	540
Times Beach	19,150	41.8	459

Both Sikes and Bayou Bonfouca were burning hydrocarbon contaminated soil and Times Beach was processing PCB and dioxin contaminated soil. The average flow is 455 dscfm per tph of feed soil.

During the dioxin furan tests, the BCDP processing rate averaged 1.87 tph, and the stack flow averaged 21 dscfm. Compared to the BCDP, incinerators dilute pollutants. If the BCDP had the same dscfm off-gas flow as an incinerator, the flow at 1.87 tph would be:

$$1.87 * 455 = 853 \text{ dscfm}$$

At this flow, the TEQ concentration in the stack would be:

$$0.18 * (21/853) = 0.0044 \text{ nanograms per cubic meter}$$

This shows the BCDP to be 0.20/0.0044 = 45 times lower in TEQ mass emissions than the incinerator standard.

Particulate Emissions. The particulate standard for incinerators is also a concentration limit, 0.030 grains per dry standard cubic foot (dscf). NFESC reported that the laboratory had problems with the particulate test, but the reported number was 3E-07 pounds per dscf, which is 0.002 grains per dscf. During the particulate test, the average production rate was 1.95 tph and the average flow was 24 dscfm. If these particulates had been in an incinerator, off-gas the concentration would be:

$$0.002 * (24/(1.95 * 455)) = 5.4E\text{-}05 \text{ grains per dscf}$$

This shows the BCDP to be 0.030/5.4E-05 = 555 times below the incinerator particulate standard.

As stated earlier, the laboratory did not perform the test properly, but particulate emissions should be very low because the gas passes through a HEME, a three-inch thick tightly-woven filter media designed to remove submicron particles, before exiting the system. The HEME should stop virtually all particulate.

Metals Emissions. Metals were not sampled. Since the coral soil is naturally low in metals, there was no reason to believe that they existed. Depending on the metal, the new EPA limits for new (versus existing) incinerators range from 50 to 67 micrograms per dry standard cubic meter (0.022 to 0.029 grains per dscf). Because metals would be in the form of particulates in the off-gas passing through the HEME at about 50°F, metals emissions should be extremely low.

Hydrochloric Acid Emissions. The hydrochloric acid limit is 4 pounds per hour or 99 percent removal. The BCDP hydrochloric acid emissions were 1.5 milligrams per hour, over a million times below the limit.

Carbon Monoxide Emissions. The incinerator limit is 100 parts per million by volume (ppmv). The BCDP emissions were over 2,000 ppmv. The meter used to measure this value only reads to 2,000. The carbon monoxide emissions are 200 times above the incinerator limit. This could be corrected by installing a small thermal oxidizer at the end of the APCS, if required.

Hydrocarbon Emissions. The hazardous waste incinerator hydrocarbon limit is 12 ppmv. The BCDP was 160 times higher than this at 1,917 ppmv. Like carbon monoxide, this could be corrected by installing a small thermal oxidizer at the end of the APCS, if required.

3.3 Residuals

Because of the expense for disposal, the quantity of residuals that are generated by the BCDP is an important factor in the economics of the technology. The Demonstration Contractor processed about 50 tons of materials, starting with a clean system. Because unknown quantities of material remained in the ducting and equipment at the end of the demonstration run, the data could not be used to estimate the residuals generation rate expected during full scale remediation. Therefore, residuals are estimated based on the quantities generated after processing 5,550 tons of soil. These residuals include those generated in the rapid start run in 1995.

Table 3-5 shows the residuals inventory as of September 18, 1996. At that time, the BCDP had processed 5,550 tons of soil. Counting the weight of the 184 55-gallon steel drums, the residuals weight was 76,546 pounds, or 38.3 tons, 0.69 percent of the production to that point in time. Not including the weight of the drums in which the residuals were stored, 33.9 tons of residuals were produced for a residuals generation rate of 0.61 percent.

Table 3-5
Residuals Inventory as of September 18, 1996

	Number of Drums	Total Weight (pounds)	Weight Without Drums	Percent of Total
Multiclone Fines	59	22,740	19,909	29%
Granular Activated Carbon Drums	18	8,490	7,626	11%

Table 3-5 Residuals Inventory as of September 18, 1996				
	Number of Drums	**Total Weight (pounds)**	**Weight Without Drums**	**Percent of Total**
Oleophilic Media Drums	15	5,058	4,338	6%
Spent Carbon	12	4,803	4,227	6%
Filter Press Cake	43	23,805	21,741	32%
Surge Tank Mud	4	2,420	2,228	3%
Air Carbon	3	1,344	1,200	2%
Personal Protective Equipment	18	3,469	2,605	4%
HEME Filters	5	911	671	1%
WESP/Decontamination Sludge	3	2,000	1,856	3%
Bag Filters	2	636	540	1%
Laboratory Waste	2	871	775	1%
TOTAL	**184**	**76,546**	**67,714**	**100%**

These residuals can be broadly grouped into three areas: air treatment residuals, water treatment chemicals, and miscellaneous.

The air treatment residuals include the air carbon, cyclone fines, filter cake from the water plant, Surge Tank mud, and WESP/decontamination sludge. While some of the filter cake from the water plant came from decontamination activities and storm water, most of it probably came from dust carried off the soil in the RKR and collected in the APCS. The Surge Tank "mud" was removed from the Surge Tank and drummed during a shutdown. The material was allowed to settle and decanted. Similarly, the WESP/decontamination sludge was removed from the WESP during a shutdown. These residuals from the APCS account for about 70 percent of all residuals.

The air carbon was changed once in October 1995, after the rapid start run, which processed about 650 tons of materials. Samples were taken at the inlet, midpoint, and exit of the 1,200 pounds of air carbon. The PCB concentration at those three points was 800 ppm, 12 ppm, and 1.2 ppm, respectively. Air carbon can hold several percent by weight PCB, so the carbon was probably far from being saturated and did not need to be changed at that point.

Water treatment chemicals, activated carbon, oleophilic media, and spent carbon accounted for 23 percent of the residuals. The Carbon Drums and Oleophilic Media Drums were pre-piped in 55-gallon drums used before the main carbon treatment tanks in the water plant. The spent carbon came from the carbon treatment vessels in the water plant. In every case, this material was replaced because of plugging with fines, not because of saturation and PCB breakthrough. Had the water plant been more effective at solids removal, the quantity of these residuals would have been lower.

The balance of the residuals, HEME filters, bag filters from the water plant, personal protective equipment, and laboratory waste accounted for about 7 percent of the total.

4.0 Economic Analysis

4.1 Actual Cost on Guam

Because the Guam BCDP was the first production BCDP ever built and operated, the direct result of a R&D effort, the actual costs experienced on Guam are higher than the cost would be if a new BCDP were built today. The cost analysis presented here does not include the R&D cost.

4.1.1 BCDP Capital Cost

The capital cost of the Guam BCDP unit is a combination of costs incurred by the Demonstration Contractor and the Remediation Contractor. Table 4-1 shows the purchase cost of equipment supplied by the Demonstration Contractor. Demonstration plant equipment that was not used in the full scale plant is crossed out and not included in the total demonstration plant equipment cost shown in Table 4-1.

Table 4-1
Purchase Cost of Equipment Supplied by the Demonstration Contractor That was Used in the Production Plant

Equipment	June 1995 Cost
Rotary Kiln Reactor	$407,000
Knife Gate Valves	$2,500
Portable Crushing Plant	$110,000
~~Pugmill~~	~~$94,700~~
Feed Hopper/Conveyor Weighbelt	$52,600
Bicarb feed Screw Conveyor	$11,700
~~Reactor Outlet Conveyor~~	~~$11,500~~
Portable Conveyor	$2,890
Bin Vibrators	$2,740
Platform Weigh Scales	$8,700
Fuel Tanks	$6,030
~~Baghouse~~	~~$15,800~~
~~Cyclone~~	~~$6,110~~
~~Wet Scrubbers~~	~~$12,700~~
Forced Air Heat Exchanger	$20,800
~~Induced Draft Fan~~	~~$9,910~~
~~Compressor and Dryer~~	~~$10,800~~

Table 4-1 Purchase Cost of Equipment Supplied by the Demonstration Contractor That was Used in the Production Plant	
Equipment	**June 1995 Cost**
Stainless and Carbon Steel Tanks	$14,200
~~Agitators for Tanks~~	~~$7,060~~
~~Butterfly Valve~~	~~$3,300~~
Filter Press	$15,500
Pumps	$19,300
~~Air Carbon Tanks~~	~~$16,100~~
Process Equipment Skids	$14,800
Feed Shelter (20 by 30 feet)	$2,500
Cost of Reused Demonstration Plant Equipment	**$707,000**

The Pugmill was initially used to mix the soil and sodium bicarbonate. During remediation, the bicarbonate was added directly to the feed soil conveyor and mixed in the RKR. The redesigned APCS did not use any of the demonstration plant APCS equipment. The feed shelter was a steel frame structure covered with canvas that was purchased to keep excavated soil dry. This was used in the production system to cover the Surge Tank in the water treatment plant to exclude rain water. The forced air heat exchanger was initially used in the demonstration plant APCS. This exchanger was used in the production system to cool the WESP blowdown before it entered the WWTP. The demonstration air compressor and dryer was undersized for the new plant and in poor condition mechanically, largely as a result of having set outside in the Guam weather for several years. The air compressor was replaced by a new, larger unit.

Because of the research and development nature of this project combined with the overlapping of two contractors, it is very difficult to extract a realistic actual capital cost. Due to schedule pressures, the Remediation Contractor performed construction to convert the plant from a remediation plant to a production system while air pollution control equipment was being designed and purchased. Guam is a small island with a population of about 140,000. The typical construction trades that would normally be used, pipefitters, welders, etc., are not available on Guam. Most of the plant construction was done by the people who were sent over to operate the plant. Because of these factors, the construction costs were higher than they would have been had skilled trades people and

a complete design package been available when construction started. A more realistic capital cost can be derived by factoring total plant cost from the bare equipment cost.

Table 4-2 lists the new equipment that was purchased by the Remediation Contractor. Adding the demonstration Equipment Cost, $707,000, to the new equipment cost, $592,000, gives a total BCDP Bare Equipment Cost of $1,299,000, say $1,300,000.

Table 4-2
Purchase Cost of Equipment Purchased by the Remediation Contractor and Used in the Production Plant

Equipment	June 1996 Cost
Cyclone	$9,855
WESP	$121,400
Primary Condenser	$53,073
Chiller Condenser	$125,750
Two HEME Tanks and Elements	$17,500
Rotary Lobe ID Fan	$11,835
Air Carbon Vessels and Carbon	$3,750
Continuous Emissions Monitor	$107,000
Boiler	$57,300
Cooling Tower	$5,756
Cooling Tower Pumps	$8,838
WESP Recirculation Pump	$6,710
Air Pollution Control System Subtotal	**$528,767**
Flocculation Agitator	$2,500
Clarifier	$19,980
Water Carbon Units and Carbon	$4,000
Water Plant Subtotal	**$26,480**
Air Compressor and Dryer	$14,725
Radial RKR Product Conveyor	$21,745
Total New Equipment Cost	**$591,717**
say	**$592,000**

The ratios for cost elements shown in Table 4-3 are based on standard estimates for major additions to chemical processing operations at partially developed sites (Peters and Timmerhouse, 1991).

Table 4-3 provides ranges for the cost factors. The lower end of the range is used because much of the expensive equipment (the RKR, crusher, and feed conveyor) are mobile and delivered to the site in a condition that requires minimal set up. The estimated capital cost for the BCDP is $3,692,000. A Feed Preparation Building for temporary storage was also constructed for about $160,000, bringing the total cost to $3,852,000.

Table 4-3
Factored Capital Cost Estimate for a BCDP Unit Constructed in the Continental U.S.

Direct Costs	(Typical Ranges)	Factor Selected	Cost
Purchased Equipment	100%	100%	$1,300,000
Installation	25 to 55%	30%	$390,000
Instrumentation and Controls	6 to 30%	13%	$169,000
Piping (installed)	16 to 66%	16%	$208,000
Electrical (installed)	10 to 15%	10%	$130,000
Site Preparation	10 to 20%	10%	$130,000
Services/Support Facilities	30 to 80%	30%	$390,000
Total Direct Cost	197 to 366%	209%	$2,717,000
Indirect Costs			
Engineering - Percent of Total Direct Cost	16 to 30%	17%	$221,000
Construction Expenses - Percent of Total Direct Cost	20 to 37%	21%	$273,000
Total Indirect Cost	36 to 67%	38%	$494,000
Contractor's Fee at 5 Percent Total Direct Cost and Total Indirect Cost	12 to 22%	12%	$156,000
Contingency at 10 Percent Total Direct Cost and Total Indirect Cost	23 to 43%	25%	$325,000
Fixed Capital Investment	268 to 498%	284%	$3,692,000

4.1.2 Operating and Maintenance Cost on Guam

Table 4-4 shows the actual daily operating cost of the BCDP unit on Guam. These numbers came from the on-site cost tracking system. Diesel fuel and electricity were provided directly by the Navy. The electrical usage is for the process only, not the offices. Diesel fuel usage is for the plant as well as the heavy equipment used to excavate and handle the soil.

Table 4-4 BCDP Plant Daily Operating Cost on Guam		
Cost Item	**Daily Cost**	**Percent of Total**
Site Labor	$6,729	51%
Per Diem and Lodging	$2,137	16%
Materials/Replacement Parts/Process Chemicals	$584	4%
Excavation Equipment Rental	$555	4%
Disposal of Residuals	$540	4%
Guam Gross Receipts Tax	$503	4%
Interim Trips Home	$393	3%
Home Office Support	$347	3%
Site Vehicles	$289	2%
Diesel Fuel	$365	3%
Shipping of Supplies and Equipment	$209	2%
Cost Tracking and Accounting	$152	1%
On-site Laboratory Supplies	$147	1%
Electricity	$194	1%
Office Supplies/Postage/Computers/Miscellaneous	$109	1%
Health and Safety Supplies/Bottled Water	$61	0.5%
Total Daily Operating Cost on Guam	**$13,313**	

Monthly energy usage is shown in Table 4-5. Oddly, energy usage does not correspond well with production, so a daily cost will be used. Over the period shown in Table 4-5, the diesel fuel usage averages 365 gallons per day and electrical usage is 1,942 kilowatt-hour per day. Using a cost of $1.00 per gallon for diesel and $0.10 per kilowatt-hour for electrical, the daily cost is $365 for diesel fuel and $194 for electricity.

Table 4-5 Diesel Fuel and Electricity Usage Per Ton of Production					
	Gallons Diesel Fuel	**Kilowatt-hours Electrical Usage**	**Tons Production**	**Gallons Per Ton**	**Kilowatt-hour Per Ton**
April	9645		719	13.4	0
May	13738		1032	13.3	
June	13461	46080	1085	12.4	42.47
July	12059	57300	729	16.5	78.60

Table 4-5 Diesel Fuel and Electricity Usage Per Ton of Production					
	Gallons Diesel Fuel	Kilowatt-hours Electrical Usage	Tons Production	Gallons Per Ton	Kilowatt-hour Per Ton
August	10251	75480	742	13.8	101.73
September	7960	60400	564	14.1	107.09
			Average	13.9	82.5

Over half the operating cost was labor. The plant was operated 24 hours a day, 7 days a week, by a staff of 20 people: 12 operators, 3 operations support people, and an office staff of 5.

Three 12-hour shifts each consisting of three operators and a shift supervisor (12 people total) ran the plant. Three additional people provided maintenance and did the excavation of contaminated soil and the backfill of treated product.

Plant support staff consisted of a Superintendent, Quality Control/Laboratory Manager, Engineer, Chemist, and Schedule/Cost/Procurement person. Except for Quality Control Samples, all the analytical tests necessary for the project were done in the on-site laboratory.

The second highest cost item, per diem and lodging, was 17 percent of the cost. Except for a local hire chemist, the plant staff all came from the mainland. Lodging was $75 per day and per diem was $50 per day. This was paid 7 days a week whether the person worked on a particular day or not. Because of this high cost of being on the island, the crew went to a standard 60-hour work week. The overtime was cheaper than the per diem. The weekly cost of 7($75 + $50) = $875 is equivalent to an hourly wage of $875/40 = $21.88 per hour.

Out of the materials, replacement parts, and process chemical costs, about 40 percent were process chemicals. These consisted of sodium bicarbonate, carbon, polymer, and Oleophilic Media for the WWTP, and boiler and cooling tower water treatment chemicals.

The Navy provided a dump truck and front-end loader at no direct cost to the project. A trackhoe, rubber-tire loader, and breaker hammer (to break up coral) were rented on the mainland and shipped

to Guam. PCBs are a political issue on Guam, and the contractor was prohibited from renting equipment on the island that would be in contact with PCBs.

The BCDP generates contaminated residuals that amount to about 0.5 percent by weight of the soil treated. These are mainly dust captured by the cyclone in the APCS, dewatered sludge from the WWTP, contaminated Oleophilic Media from the water treatment plant, and contaminated carbon from the APCS and water plant.

Hazardous waste disposal is very expensive from Guam. The nearest hazardous waste disposal facility is over 6,000 miles away on the mainland. The waste must be shipped from Guam to the west coast, and then from the west coast port overland to the disposal facility. There is only one carrier who will transport waste from Guam to the mainland. They charge $14,499 per 40-foot container. In addition, the waste must be placed in United Nations approved steel drums. Not being able to ship the waste in bulk is another significant cost increase. Residuals disposal from Guam is about $2,100 per ton for landfill and $3,100 per ton for incineration.

The Guam gross receipts tax, 4 percent of the daily cost, is a Government of Guam tax on the contract value of work done on Guam.

Every three months, each person at the site was provided with a round trip back to the mainland and two weeks home. The daily cost for the airfare was $393, and this had another cost impact; when one of the 12 operators rotated home, the other operators worked extra hours to cover the vacancy. Since the operators were already scheduled for 60 hours per week, coverage for the off-island operator was 100 percent overtime. There are 13 weeks in a three-month period, and 12 operators gone two weeks every 13 weeks means that 24 weeks of coverage has to be provided every 13 weeks. The interim trips home significantly increased premium pay.

4.1.3 Per Ton Treatment Cost on Guam

The BCDP on Guam operated at 1.7 tph with an availability of 85 percent, for a daily average production rate of 34.7 tons. With a daily operating cost of $13,313, the operating cost per ton is $384. Based on the total tonnage for the project, 15,000 tons, and a capital cost of $3,852,000, the pro-rated capital cost is $257 per ton, for a total cost of $641 per ton. This is high for mainland remediation, but remember that to send the soil off-island for landfill disposal would cost the same

as the residuals disposal, over $2,000 per ton. Even if the equipment is not used again, the Navy's solution was much more cost effective than the alternative.

4.2 Cost of a New System in the Continental United States

Actual cost experience on Guam is used as the basis for estimating the cost of using the BCDP to remediate a mainland site.

4.2.1 Capital Cost

The RKR is the rate-limiting equipment at the Guam BCDP. The APCS was a "first-of-a-kind" unit and was designed conservatively. Based on actual versus design flows, the cyclone, WESP, and Primary Condenser operated at half design capacity when production was 2 tph. After the Primary Condenser, the off-gas flow rate dropped dramatically and the remaining equipment in the APCS was oversized by a factor of 16.

The RKR cost constitutes about 30 percent of the equipment cost. The kiln in Guam was designed for 1 tph, but was able to process at 2 tph for short times. The RKR would do 2 tph thermally, but not mechanically. At no significant change in cost, the Guam RKR could have been built as a 2 tph unit. The baseline for the RKR costs will be the Guam unit with a purchase cost of $407,000 rated at 2 tph.

There are two ways to increase the RKR's capacity: make the unit larger and/or build the shell out of a material that can be operated at a higher temperature. The unit in Guam had a carbon steel shell, 30 feet long and 3 feet in diameter with a maximum temperature limit of 1,000°F. In June 1996, the RKR vendor quoted a price of $60,000 for an alloy shell that could be operated at 1,400°F and $25,000 for a replacement carbon steel shell. The RKR could thus be ordered with a shell that could be operated at 1,400°F for an additional $35,000.

As a general rule, calciner capacity increases directly proportionally to increases in operating temperature. The alloy shell would thus allow the RKR to operate at a rate of:

$$2 * (1{,}400°F/1{,}000°F) = 2.8 \text{ tph}$$

Using a straight temperature ratio to calculate the rate increase in these temperature ranges is very conservative. Heat transfer between the shell and soil in the RKR is by conduction and radiation.

As the shell temperature increases through the 700°F to 1,000°F range, radiation becomes the dominant heat transfer mechanism. The conductive heat transfer rate increases directly proportionally to the temperature difference between the shell and soil, but the radiative heat transfer rate increases to the fourth power of the temperature difference. Above 1,000°F heat transfer will increase much faster than the ratio of the temperature difference.

Even assuming a linear increase of capacity with temperature, the alloy shell is very cost effective. The 2 tph RKR cost $407,000, or $203,500 per ton of capacity. The additional 0.8 tph for an additional $35,000 is a cost of $43,750 per ton of capacity.

As will be shown shortly, the most cost-effective size for a unit will depend on the size of the site (or sites, for a mobile unit) to which it will be applied. By their nature, indirect fired kilns like the RKR are limited to a smaller size than direct fired incinerators. Since the direct fired incinerator is heated from the end, the rotating shell can be supported at any point along the length of the shell. The indirect fired RKR, however, has burners located directly beneath the shell, and the shell can only be supported at each end. As the diameter or length of the shell is increased, the shell must be made of thicker material just to support its own weight. According to the RKR vendor, this limits the shell to about 9 feet in diameter.

If the larger RKR unit is to be mounted on a truck bed, the largest portable unit known by the authors has a 4.5 foot diameter shell that is 36 feet long. This unit will be used as a basis for developing the cost equations for a new BCDP. The capacity of a unit is controlled by the heat transfer rate and, in general, the heat transfer rate is proportional to the surface area of the shell. The existing RKR shell has a surface area of 212 square feet. The larger truck-mounted unit has an area of 573 square feet, for an increase in capacity to (573/212) * 2.0 = 5.4 tph. A regression analysis on calciner costs [7] shows that the ratio of shell areas raised to the 0.4 power is a reasonable predictor of costs. The cost of the 573 square foot unit is estimated to be:

$$\$407{,}000 * (573/212)^{0.4} = \$606{,}000$$

This larger unit with an alloy shell would have a capacity of:

$$5.4 \text{ tph} * (1{,}400°F/1{,}000°F) = 7.6 \text{ tph}$$

and an estimated cost of:

$$(\$407{,}000 + \$35{,}000) * (573/212)^{0.4} = \$658{,}000$$

This unit has 3.8 times the capacity of the Guam unit. Off-gas flows will increase in about the same proportion.

For cost scaling, the Guam BCDP can be divided into five sections:

1. The Cyclone, WESP, and Primary Condenser and their supporting equipment; the Cooling Tower; Cooling Tower Pumps; Boiler; and WESP Recirculation Pump were oversized in the Guam unit by a factor of 2 (i.e., these units would work on a 4 tph plant). Total bare equipment cost is $262,932. This equipment cost will be estimated using the 0.6 rule.

2. The Chiller Condenser, HEME Tanks and Elements, ID Fan, and Air Carbon Units are oversized by a factor of 16 (i.e., these units would work on a 32 tph plant). Total bare equipment cost is $158,835. This equipment cost will be estimated using the 0.6 rule.

3. The Continuous Emissions Monitor, an automatic stack sampling instrument, will have the same cost in any size plant. Total bare equipment cost is $107,000, and the installed cost is estimated at $214,000. This will be a constant for any plant size.

4. The Feed Preparation Building cost $160,000. The cost of $40 per square foot will be considered constant, and the cost will vary directly with the size of the plant.

5. The remaining bare equipment cost, $364,233, will vary as the plant size varies and follow the 0.6 rule.

Using the installation factor of 2.84 to go from bare equipment cost to installed cost, the Capital Investment for the 7.6 tph unit is:

$$\text{Capital Investment} = 2.84 * (\$658{,}000 * (7.6/7.6)^{0.4} + \$262{,}932 * (7.6/4)^{0.6} + \$158{,}835 * (7.6/32)^{0.6} + \$364{,}233 * (7.6/2)^{0.6}) + \$214{,}000 + \$160{,}000 * (7.6/2) = \$6{,}283{,}000$$

The equipment cost of a BCDP with a different capacity can be estimated by substituting the tph of the new unit for the 7.6 tph in the above equation [the factor for kiln cost in the equation shown above, $(7.6/7.6)^{0.4}$, becomes $(tph/7.6)^{0.4}$].

4.2.2 Operating and Maintenance Cost

If this plant were on the mainland and the per diem and lodging, interim trips home, shipping of supplies and equipment (this charge is for packing and shipping connex boxes to Guam), and site vehicles were removed from the cost, the daily operating cost would drop to $10,098 per day, lowering the per ton treatment cost to $291.

A mainland plant would bulk ship the residuals instead of drumming them. Bulk incineration costs are about $500 per ton, and overland shipping will be estimated at $200 per ton. The costs on Guam were much higher because of the ocean shipping and the fact that the residuals had to be drummed. Residuals incineration cost on the mainland would drop to about $700 per ton from $3,100 per ton — a 73 percent reduction in cost. This lowers the operating cost to $9,700 per day. The 4 percent Guam Gross Receipts Tax is left in the cost because there would likely be other local taxes at a different location. Unlike most locations in the United States, Guam has no sales tax.

Operating costs in the continental U.S. are estimated using the information in Table 4-6. Table 4-6 shows the daily cost in Guam, and then breaks the cost down into two categories, "mainland fixed" and "mainland variable."

Table 4-6
BCDP Daily Operating Cost on Guam and Fixed and Variable Operating Cost for a Mainland BCDP

	Guam	Mainland Fixed	Mainland Variable
Site Labor	$6,729	$6,729	
Per Diem and Lodging	$2,137		
Materials/Parts/Process Chemicals	$584		$584
Excavation Equipment Rental	$555	$555	
Disposal of Residuals	$540		$146
Guam Gross Receipts Tax	$503		$503
Interim Trips Home	$393		
Home Office Support	$347	$347	
Site Vehicles	$289		

Table 4-6 BCDP Daily Operating Cost on Guam and Fixed and Variable Operating Cost for a Mainland BCDP			
	Guam	**Mainland Fixed**	**Mainland Variable**
Diesel Fuel	$365		$365
Shipping Supplies and Equipment	$209		
Cost Tracking and Accounting	$152	$152	
On-site Laboratory Supplies	$147	$147	
Electricity	$194		$194
Office Supplies/Postage/Computers/Miscellaneous	$109	$109	
Health and Safety Supplies	$61	$61	
TOTAL COST	**$13,313**	**$8,098**	**$1,792**

The mainland fixed costs are daily costs that will not change significantly as plant size changes, i.e., they tend to be fixed daily costs for the sizes of plants we are considering. The variable costs, such as fuel and residuals disposal costs, will increase as plant size increases. Table 4-6 also shows Guam costs that are not applicable to a mainland plant.

The operating model has a fixed cost of $8,098 per day and a variable cost of $1,792 per day that is assumed to vary directly with plant capacity. These costs are for a 2 tph plant. The daily operating costs for a 7.6 tph plant are:

$$\text{Operating Cost} = \$8{,}098 + \$1{,}792 * (7.6/2) = \$14{,}908$$

and the daily per ton operating cost is $14,908/155 = $96 per ton. The operating cost for a different size unit can be estimated by substituting the unit's capacity in tph for the 7.6 in the equation above.

4.2.3 Cost as a Function of Site Size

The optimum size (i.e., minimum cost) plant for a given site must take into account both capital and operating cost. To build a cost model over the range of 0.5 to 10 tph, the following assumptions are made:

1. The BCDP will be used for one site and then scrapped. No scrap value is allowed — the scrap value covers the cost to demobilize the plant.

2. The cost equations for capital and operating costs developed in the previous section are valid over the 0.5 to 10 tph range.

Remember that the costs developed are for a complete, fully staffed plant. The labor required to operate the 2 tph plant in Guam would be sufficient to operate a 10 tph plant. On the smaller end of the scale, below 1 tph, labor reductions could be made, but the type of plant would have to change significantly from the BCDP Guam operation to take advantage of the smaller size.

Table 4-7 shows the cost for building and operating different size BCDPs to remediate a 10,000 ton site. The tons per day capacity is calculated from the tph rating assuming an 85 percent availability. The per ton operating cost is calculated by dividing the daily operating cost by the tons per day production. The total cost is the capital cost plus the per ton operating cost times the number of tons at the site. The per ton cost is the total cost divided by the number of tons processed.

Table 4-7
Capital, Operating, and Total Cost for Different Capacity BCDP Units Built and Operated to Treat 10,000 Tons of Soil at One Site

Tons Per Hour	Tons Per Day	Capital Cost	Daily Operating Cost	Operating Cost Per Ton	Total Cost	Per Ton Cost
0.5	10.2	$1,585,127	$8,546	$838	$9,963,558	$996
1	20.4	$2,188,151	$8,994	$441	$6,596,974	$660
2	40.8	$3,082,090	$9,890	$242	$5,506,110	$551
3	61.2	$3,799,127	$10,786	$176	$5,561,545	$556
4	81.6	$4,423,741	$11,682	$143	$5,855,359	$586
5	102	$4,988,860	$12,578	$123	$6,221,998	$622
6	122.4	$5,511,459	$13,474	$110	$6,612,276	$661
7	142.8	$6,001,667	$14,370	$101	$7,007,969	$701
8	163.2	$6,466,109	$15,266	$94	$7,401,526	$740
9	183.6	$6,909,406	$16,162	$88	$7,789,690	$779
10	204	$7,334,932	$17,058	$84	$8,171,108	$817

This analysis was done for sites ranging from 5,000 to 100,000 tons. The results are shown in Figure 4-1. Several conclusions can be made.

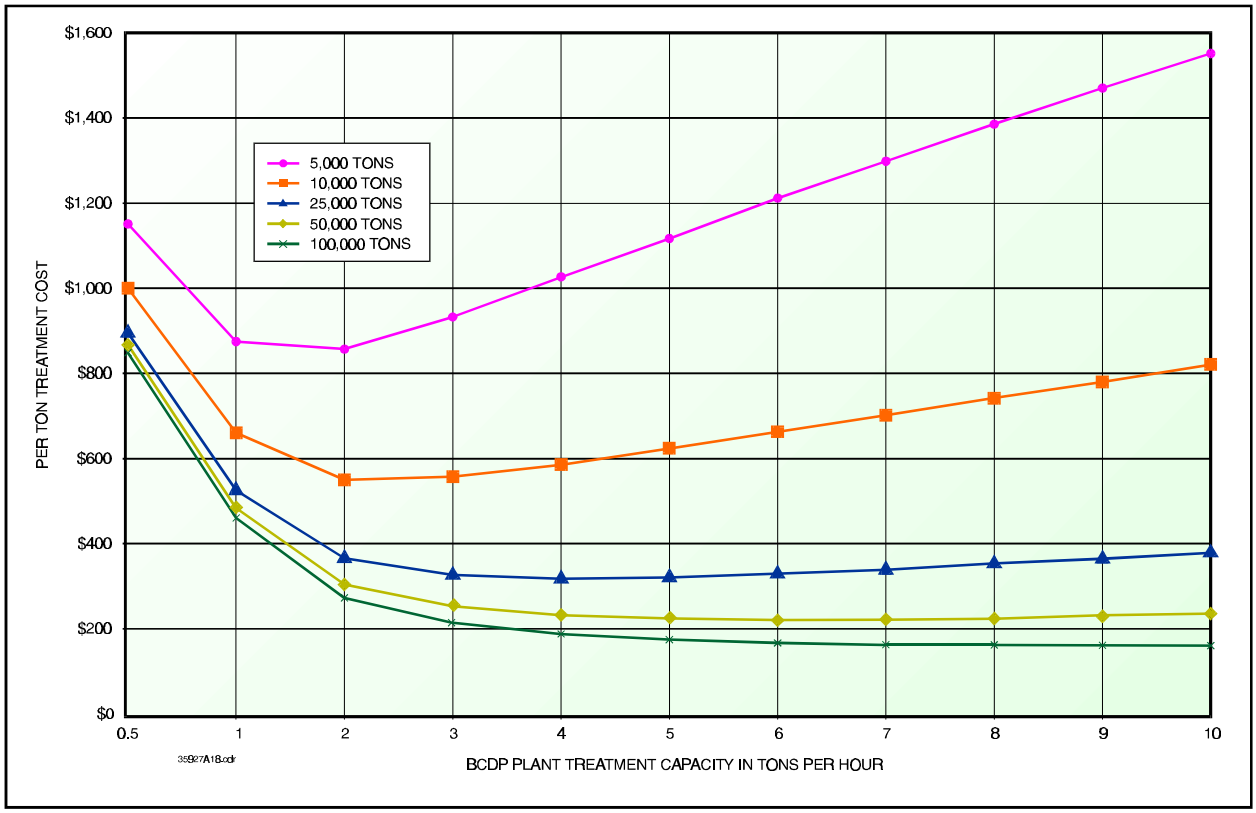

Figure 4-1
Per Ton Treatment Cost of a Given Site Size for a BCDP Built and Used for One Site Only

There is a minimum cost plant size for a given site size. Plants smaller than the minimum cost plant for a given site size are more expensive because of high operating cost. If the plant is too large for the site, the capital cost is not spread out over enough tons of material to be economical.

For sites larger than about 25,000 tons and plants over about 3 tph the costs flatten and are not very sensitive to changes in plant size or site size. The BCDP is very competitive with commercial incinerator costs for sites above 25,000 tons. For sites smaller than about 7,500 tons, hauling the material to a commercial incinerator would be cheaper than building this type of unit to remediate the site. Between these upper and lower site sizes, a site-specific study would need to be made to develop the best alternative. Remember that this analysis is for building a unit for use at a single site. A unit that can be moved and reused would make smaller sites more practical, and multiple, larger sites even more economical.

It is unlikely that the equipment would be scrapped after one job. Even the 7.6 tph RKR can be mounted on a truck and moved from site to site. If the unit is moved and used on multiple sites, the model here would have to be modified by the addition of mobilization and demobilization costs.

To better define the optimum plant size for a given site size, the derivative of the total site cost equation was taken relative to tph and set equal to zero, then solved for site size. Based on our model, the minimum cost plant size (tph) for a given site size in tons (S) is:

$$S = 837 * tph^{1.4} + 1608 * tph^{1.6} + 202 * tph^{2}$$

This equation is plotted in Figure 4-2. Figure 4-2 plots per ton cost against the minimum cost plant size and site size. Of these two variables, site size is by far the more important above a processing rate of 2 tph. Although the minimum cost plant for a 50,000 ton site is about 6.5 tph, as shown in Figure 4-2, the per ton treatment cost, as shown in Figure 4-1, varies only slightly for plant sizes between 5 and 10 tph.

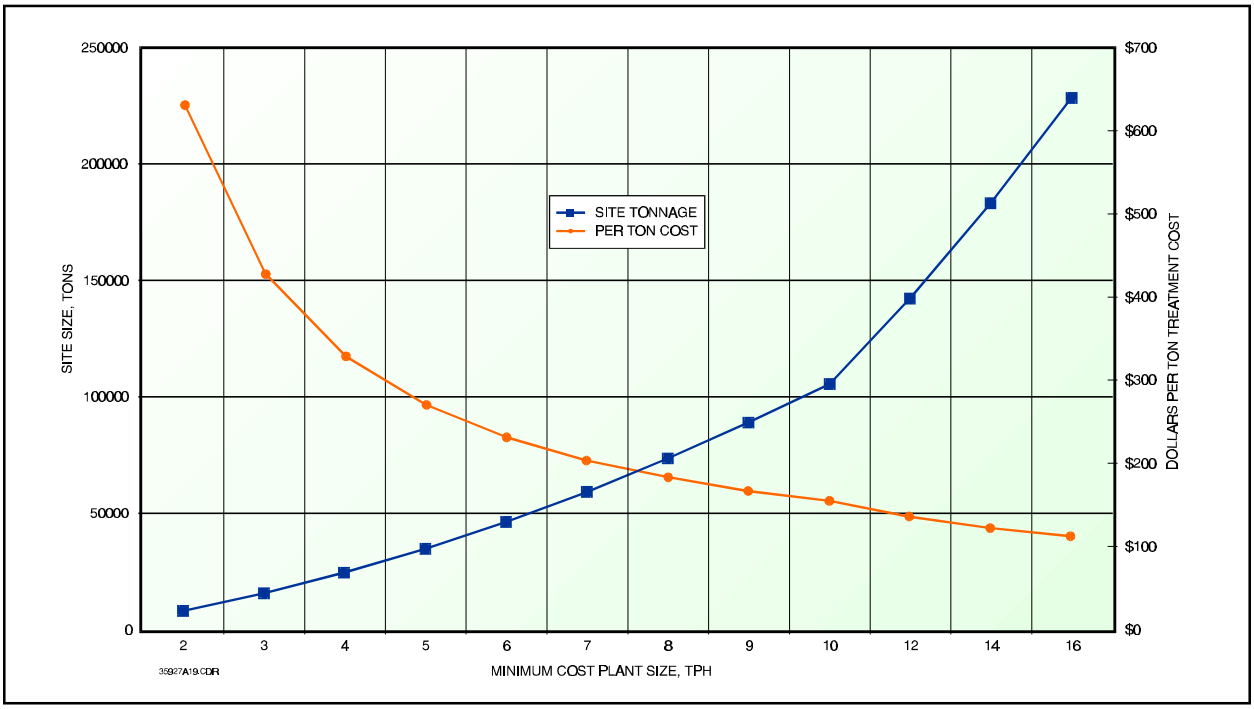

Figure 4-2
Minimum Cost Plan Size for a Given Site Size and the Corresponding Dollar Per Ton Treatment Cost

Table 4-8 shows the optimum range of plant sizes for various site sizes and the corresponding treatment cost and job duration (excluding mobilization and demobilization time). Again the insensitivity of plant size to cost is apparent, especially as the site becomes larger. For a very large plant, the cost drops below $100 per ton. For large sites, the BCDP is competitive with landfilling.

Table 4-8
The Optimum Range of BCDP Plant Size to Treat Large Sites and The Corresponding Cost Per Ton and Treatment Duration

Site Size (tons)	Dollars Per Ton	Minimum Tons Per Hour	Maximum Tons Per Hour	Maximum Days	Minimum Days
25,000	$320	4	4	306	306
50,000	$220	6	6	408	408
100,000	$157	8	12	613	408
150,000	$134	11	18	668	408
200,000	$117	12	19	817	516
250,000	$107	14	22	875	557
300,000	$100	15	25	980	588
500,000	$85	19	36	1,290	681

The price for incinerators remediating large sites is in the $200 to $250 per ton range. Many Superfund incineration sites that are bid on a unit price basis involve other operations, such as sludge dewatering, bioremediation, etc., making it difficult to extract the cost charged for incineration alone. One Superfund site that was remediated by incineration alone was Sikes, located north of Houston, Texas. The original bid was to incinerate 341,000 tons for $90,000,000 ($264 per ton). Before the job ended, an additional 163,000 tons was remediated for an additional $30,000,000 ($184 per ton). This job was completed in 1995.

For large plants, above 10 or 15 tph, the configuration of the plant would probably change. Because of the size limits on the RKR, at some point two RKRs might have to be installed to achieve the desired capacity. Especially for the large sites with a broad range of optimum plant size, the smallest "optimum size" plant would probably be favored economically. This analysis has not included the cost of money, but that would have to be considered in the analysis of a specific site. A 200,000 ton site, for example, could be completed in 516 days with a 19 tph BCDP, or in 817 days with a 12 tph BCDP. The larger unit would require a greater cash outlay at the beginning of the job, but the payment for the job would also be collected quicker.

5.0 Technology Applicability

BCDP can be used to treat the same type of material that can be treated by a thermal desorber; contaminated soils, sludges, and filter cakes. If PCBs (and possibly other chlorinated compounds) are treated, the bicarbonate catalyst will increase plant efficiency by allowing the soil to be cleaned at a lower temperature and chemically destroying some of the PCBs.

Although the BCDP was initially designed to treat PCB-contaminated soil, its performance on other types of contaminants can be predicted. The BCDP will remove both volatile and semivolatile compounds from soil, including very low volatility chlorinated organics. The performance of the APCS depends largely on the nature of the organics to be removed. High boiling point organics, such as PCBs, are largely removed by condensation and captured on either the WESP) or the HEME. Semivolatile water soluble organics are captured in the WESP water by solubilizing into that water. Volatile non-water soluble organics and residual PCB vapors are captured by carbon absorption at the end of the APCS.

Laboratory studies have shown the benefits of bicarbonate when treating PCB contaminated soil. The bicarbonate's effectiveness on other types of contaminated soil is unknown, but the APCS should be just as effective if the unit were operated as a thermal desorber on any soil contaminated with organic compounds having vapor pressures similar to PCBs.

Compounds such as PCBs, which may react with oxygen at elevated temperatures to form even more hazardous compounds such as dioxins, are especially suited to the BCDP. The inert steam atmosphere in the RKR and throughout the APCS excludes most of the oxygen. The sodium bicarbonate breaks down, releasing carbon dioxide and water to add additional inert gases to the system. At high temperatures, in the absence of oxygen, some pyrolysis will occur and actually break down larger molecules into smaller and, in many cases, less toxic compounds.

The primary factors affecting contaminant removal in the RKR are temperature and residence time. As an example, PCB-contaminated soil requires a temperature of approximately 600°F at a residence time of about one-half hour. As the temperature is raised, the residence time can be reduced. These numbers are approximate because the type of soil that the PCBs are in is also a factor. The total quantity of organics that is released in the RKR is an important factor in the overall economics of the system. Since only partial destruction of PCBs is caused by the bicarbonate, all the condensible

organics that are released will likely be contaminated with PCBs. This contaminated residual can be disposed of off site, typically by incineration.

Table 5-1 lists the codes for some specific RCRA wastes that can be treated by this technology. These compounds can all be successfully treated in standard thermal desorbers, therefore, they should be treatable with the BCDP. General contaminant groups that can be treated by the BCDP are shown in Table 5-2. This table is based on current available information for treatment by thermal desorption.

Table 5-1
RCRA Codes for Wastes Treatable by BCDP

Type	Code
Wood Treating Wastes	K001
Dissolved Air Flotation Float	K048
Slop Oil Emulsion Solids	K049
Heat Exchanger Bundles Cleaning Sludge	K050
API Separator Sludge	K051
Tank Bottoms (Leaded)	K052

Table 5-2
General Contaminant Groups Treatable by BCDP

Nonhalogenated and Halogenated
Volatiles and Semivolatiles
PCBs
Pesticides
Dioxins/Furans
Organic Cyanides
Volatile Metals

Individual site conditions must be considered to determine the effectiveness of the BCDP. For example, PCBs are released fairly quickly from the coral matrix found in Guam. It is expected that PCBs would be more tightly bound to clay, and that higher temperatures or longer residence times would be required if the PCBs were on clay instead of coral. If the PCBs at a particular site were found together with high levels of nonhazardous organics, the quantity of residuals that would be generated for off-site disposal would be increased.

6.0 Conclusions and Recommendations

6.1 Conclusions

The operation of the BCDP for over a year on Guam to successfully remediate 11,700 tons of PCB contaminated soil has proven the effectiveness of the system for PCB remediation.

The equipment is relatively easy to operate and very protective of the environment. The system has zero water discharge and the air emissions are better than required by the hazardous waste incinerator standards. The APCS is not subject to the upsets that can occur in incinerators. Since the RKR and APCS are operated under an inert atmosphere, there is no danger of igniting the organics that are driven off the soil and creating a positive pressure in the system that could result in uncontrolled emissions. A positive pressure was never recorded in the APCS during the remediation on Guam.

Sodium bicarbonate addition was reduced to levels well below the 10 percent initially recommended and the unit was also successfully operated without bicarbonate addition. This confirms the results of similar testing reported by the Demonstration Contractor ([6], p. 7.2). It is well established that thermal desorption without bicarbonate will remove PCBs from soil [13], [14], but laboratory studies have shown that the bicarbonate causes the PCBs to be released faster and at a lower temperature -- which would mean that RKR capacity can be increased by adding bicarbonate. The use of bicarbonate is an economic issue, a trade-off between the cost of adding bicarbonate and the cost savings that would be incurred by increased RKR capacity. No data were collected that would help define this trade-off.

6.2 Recommendations

The previous sections of this report have discussed the BCDP Guam plant and described how it was built and operated. Based on what was learned on Guam, a number of design improvements can be made for the next BCDP unit. These recommended design changes are discussed in this section.

The recommendations have not been tried, and there is no guarantee of their effectiveness.

6.2.1 Feed Handling and Preparation

A larger Feed Preparation Building would have been cost-effective on Guam because the operating rate was limited by a shortage of dry feed during the rainy season. The feed can only be crushed when it is dry, and Guam gets 15 to 20 inches of rain a month during the rainy season. For weeks

at a time during the rainy season the soil was too wet to crush. The quantity of dry feed inventory and thus, the size of the Feed Preparation Building must be determined on a site-specific basis on rainfall data and the type of soil being processed.

A screening plant after the crusher would have been useful to remove roots, debris, and larger rocks that passed through the crusher. This material would sometimes jam the dual knife gate feed system on the RKR. Recycling and crushing the larger rocks would produce a more uniform particle size feed that would allow higher capacities if the operation is thermally limited. The screening plant would also provide some redundancy for the crusher. In case the crusher broke down, feed material (i.e., material passed through the screen) could still be produced by screening out and stockpiling oversized material until the crusher was repaired.

6.2.2 Rotary Kiln Reactor

The RKR should have an alloy shell capable of handling a higher temperature than the carbon steel shell on Guam. This is a cost-effective way to increase the RKR's capacity.

According to discussions with the vendor, part of the reason that soil feed fell into the RKR breach is that the RKR was designed to operate at one tph of soil. There are flights at the soil entrance side of the shell that move the soil away from the feed pipe and into the shell. These flights on the Guam BCDP were designed for one tph, and had difficulty handling rates above 1.5 tph. It is difficult to predict, in advance, the actual processing rate that can be achieved by a given RKR at a given site. The unit will normally be limited thermally, and should be designed so that feed soil will be carried away from the breech at any rate at which the unit might be operated.

Part of the reason why only 4 of the 14 burners would maintain the design temperatures when feeding 1.5 tph of soil is that the design specification gave the soil moisture at 26 percent. Actual soil moisture was around 10 percent. Temperature control would have been more uniform across the shell if more burners could have been operated. Careful attention should be paid to burner sizing.

6.2.3 Reactor Product Handling System

Particulate emissions were a problem, and depending on the wind conditions, we exceeded the ambient standards at the site boundary, which was only about 30 feet from the product bins. One solution is to dump the hot product directly from the kiln into a jacketed mixer. Water is sprayed on the soil in the mixer. The water evaporates and then recondenses on the walls of the mixer. Heat

is removed by the cooling water on the jacket. The amount of water sprayed can be adjusted to provide a moist product that does not dust as it discharges from the mixer to the product conveyor belt. The discharge from the mixer must be from dual knife gate valves or another system that provides a seal.

Another solution sometimes used on indirect-fired kilns is to have a water spray cooling section at the end of the kiln that is attached to, and rotates with, the heated portion of the kiln ([7], p. 20-41). In this application, the clean fines released when the water sprays on the hot product will be swept out the feed end of the kiln with the contaminated fines and increase the quantity of contaminated residuals. There would be some energy savings because sweep steam would be generated from the heat in the product. Calculations would have to be done to insure that the amount of steam generated was low enough not to exceed the minimum sweep gas velocity. Excess sweep gas flow will increase the quantity of contaminated fines collected in the APCS.

6.2.4 Air Pollution Control System

This section discusses potential improvements that could be made if a project similar to the Guam project were repeated. Like other parts of the BCDP, if the process is to be used at a different location, with a different contaminant, and different air pollution regulations, an engineering study should be done to insure that an optimal system has been designed.

Significant improvements can be made in almost every part of the APCS that will lower cost and improve efficiency. Each element of the system is discussed individually.

Multiclone. The Multiclone was oversized for the actual gas flow encountered, and as a result did not operate efficiently. Although operating efficiency would have been greatly improved if two of the three clones were plugged, it was physically difficult to do this. The Multiclone on the next unit can be designed much more accurately because actual operating conditions are now known. To increase flexibility, the unit should be built so that the cones can be easily accessed for plugging.

WESP. Most of the operating problems in the APCS were with the WESP, and these problems were caused by two things: the buildup of solids in the WESP sump and recycle streams and pumping problems caused by the high temperature of the water in the WESP sump. Design changes in the next BCDP should eliminate both problems.

The solids plugged and eroded the spray nozzles, and required that the WESP be shut down from time to time and flushed. Solids buildup in the WESP caused the operating voltage to drop and thus reduce the removal efficiency of the WESP. While this probably did not have an impact on air emissions, it did allow contaminated gas to reach and foul the insulators at the top of the WESP.

Raising the blowdown to between 10 and 15 gpm helped keep the WESP cleaner. The increased blowdown required a corresponding increased addition of cool make-up water and steam injection to maintain temperature. A heat exchanger should be installed to exchange heat between the blowdown and make-up water. The blowdown needs to be cooled before it enters the water treatment plant, and preheating the make-up water will reduce steam consumption. The water treatment plant will have to be designed to handle the increased blowdown.

The WESP pump has a difficult job because of the high water temperature it is pumping. The progressing cavity pump worked better than the diaphragm pumps, but some cavitation that caused vibrations in the discharge piping occurred. Careful attention must be paid to the NPSH requirements. The pump suction line from the WESP should be designed to have minimal pressure drop, and it may be necessary to increase the sump depth or mount the WESP higher off the ground to raise the liquid level in the sump. Operating the WESP at as low a temperature as possible (above 198°F) will increase the NPSH significantly.

Figure 6-1 shows a design that would solve the problems mentioned above. The WESP blowdown is 100 percent and all the water feeding the WESP spray nozzles has been through the WWTP, thus it will be very low in solids. The blowdown passed through a heat exchanger where it is cooled by the make-up water (the Guam unit used an air heat exchanger to cool the blowdown because one was available on site). A side stream is taken off the cooled blowdown and sent to the suction side of the WESP blowdown pump. This water is injected to cool the pump suction liquid enough to avoid NPSH problems. The amount of cooling water injected is determined by a temperature controller in the WESP blowdown pump discharge. It may be necessary to add some supplemental steam to the water going to the WESP to insure that the temperature is close to the WESP operating temperature.

Much of the solids problem was caused by the poor operation of the cyclone, discussed earlier. Improving cyclone operation will significantly reduce the amount of solids sent to the WESP.

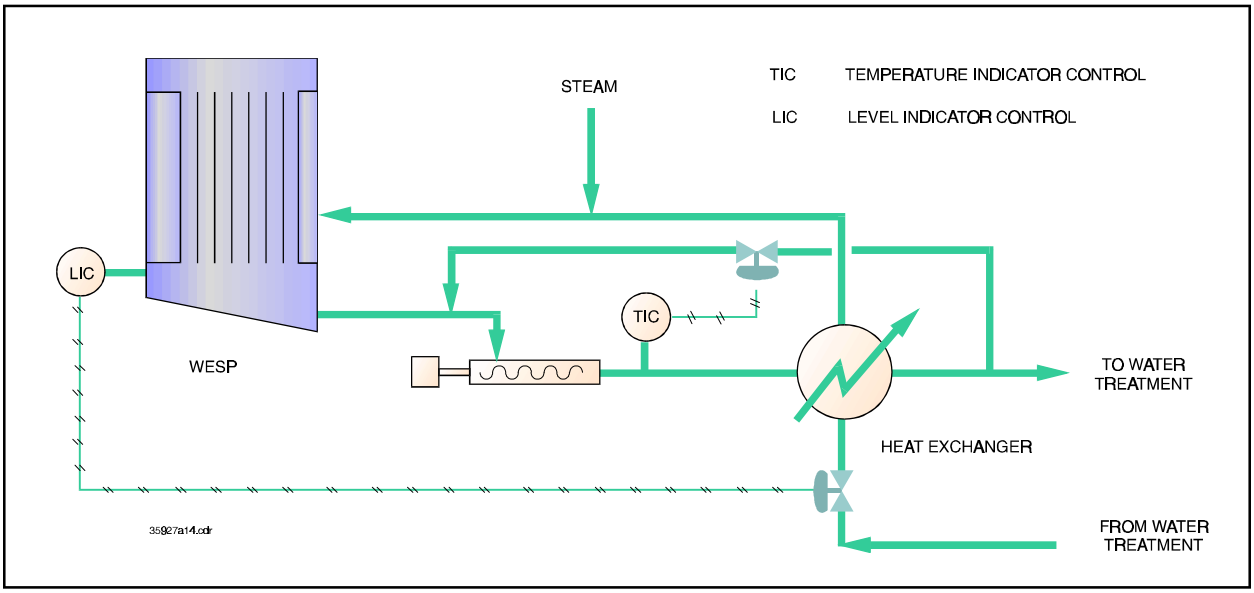

Figure 6-1
Alternative WESP Water Usage Design

The piping between the WESP pump discharge and the WESP should be insulated to conserve heat.

The make-up water to the WESP should be added continuously through a control valve instead of through an on/off solenoid valve. Adding the cold water intermittently created temperature swings in the WESP that a continuous addition would eliminate. The intermittent addition also required the level in the WESP to oscillate, which changes the NPSH available on the WESP pump. Maintaining a constant level would allow the NPSH available to be kept at a maximum, and Figure 6-1 incorporates that design.

The spray nozzle header pipes in the WESP should be designed so they can be easily removed for cleaning and replacing the nozzles.

Standard WESP design practice locates the insulators on top of the WESP, directly over the top wire support grid. Each of the four insulators is housed in a compartment and preheated air is blown into the insulator compartments. This air exits into the main body of the WESP. The continuous flow of clean, hot air across the insulators and into the WESP prevents condensation from forming on the insulators and prevents dirty gases in the WESP (dirty gases would be present in the top of the WESP when an upset condition occurs) from condensing and depositing material on the insulators. Condensation on the insulators will cause an electrical short circuit that will drop the voltage in the WESP.

The Guam WESP design put the insulators on the side of the WESP to remove them from the main gas flow (Figure 3-2). This was not sufficient and the insulators became dirty and had to be cleaned periodically. A teflon sheet should be added to reduce the opening between the insulator compartment and the body of the WESP, similar to the teflon sheet that was added between the bus duct and the insulator compartment (Figure 3-2). Two 6-inch diameter holes would be cut in each of the two sheets for the upper wire support bars. This would provide the same clearance between the support bars and teflon that exists between the wires and tubes in the WESP. If the teflon becomes dirty, it can become conductive. The 6-inch holes should provide enough clearance to prevent a short from occurring between the support bars and dirty teflon. Drain holes should be provided in the bottom of the teflon sheet in case condensation occurred in the insulator compartment when the WESP is down or when the deluge wash system is used. As mentioned earlier, eliminating the solids buildup in the WESP will allow the unit to operate much more efficiently, and keep the gas in the upper part of the WESP clean.

The WESP outlet temperature thermocouple would sometime foul and read low. This automatically increased the amount of WESP injection steam. Since this thermocouple reading is very important for safety reasons, a redundant thermocouple could be installed in the WESP outlet duct closer to the Primary Condenser inlet. Comparing these two readings would provide a warning if one of the thermocouples started to fail or foul.

Primary Condenser. This unit operated with very few problems. The tubes required cleaning every few months and the design and installation should make access to the top tube sheet as easy as practical.

The condensate pumps were air-operated diaphragm pumps because there was a concern that insoluble organics would drop out at this point and an emulsion could be formed with a high shear pump. The condensate was always very clear, and there was never any sign of a risk of forming an emulsion. Low head centrifugal pumps would probably be more reliable, and would certainly be quieter.

Venturi Scrubber. This equipment is not needed.

Chiller Condenser. This unit served two purposes, to condense additional PCBs and make them available for removal in the HEMEs and to dry the gas stream. The requirement for this unit should be examined on a site-specific basis.

On Guam, the ambient temperature does not drop below about 65°F, so cooling the gas to between 40°F and 50°F insures a dry gas. This will not work in a location with an ambient temperature below freezing. Heaters would have to be added to insure that the gas heats up after leaving the chiller. The dry gas prevents condensation in the rest of the system and increases the holding capacity of the carbon (by keeping the carbon dry).

The Chiller Condenser on Guam was designed for a gas stream of 377 acfm at 120°F. The actual conditions were a gas stream of 30 acfm at 80°F. Most other locations would have colder Cooling Tower water and a correspondingly lower Primary Condenser outlet gas temperature. This would reduce the size of the Chiller Condenser unit even more. The Chiller Condenser will be much smaller (and lower in cost) on the next unit.

HEMEs. The two HEMEs were piped in parallel. They should be piped in series, like the carbon, so that flow can be directed through a single HEME if the other element has to be changed. The cost for additional pipe and valves will be minimal because the gas flow is low at this point and the piping is CPVC.

Having the two HEMEs in series will provide even better gas cleaning efficiency, at almost no increase in cost. During the months of operation of the full scale system, the pressure drop across the HEME in use remained below 0.5 inches of water. The second HEME should stay very clean (relative to the first HEME), thus the pressure drop across the second HEME should always be much lower than the first HEME.

The HEMEs are designed to remove condensed liquids, not vapors. As the unit operates and loads up with lighter organics (organics that pass through the WESP), those organics could remove PCB vapors by solubilization. This removal mechanism was discussed in Section 2.3.1 for water soluble organics in water in the WESP and primary condenser. PCBs are not water soluble, but they are soluble in other organics. It might be that if the HEME were wetted with an organic before being placed into service, it would remove significant quantities of PCB vapor.

Like the rest of the equipment after the Primary Condenser, the HEMEs in Guam were oversized. These units are relatively cheap, and making them larger than recommended by the vendor has some advantages. There air cleaning efficiency and their capacity for holding organics and maintaining a low pressure drop increases as they become larger. The HEMEs in the Guam BCDP were designed for a flow of 400 acfm, but were operated at about 30 acfm in the full scale system.

ID Fan. A much smaller unit should be installed and the recirculation line between the suction and discharge of the ID Fan eliminated. The silencers are probably not needed for the required flow and pressure drop, but the vendor should be consulted about noise levels with and without the silencers at the design flow conditions.

The ID Fan is the only mechanical component of the APCS whose failure can cause uncontrolled emissions. A spare ID Fan should be installed in parallel. Because these fans are very small and the piping is CPVC, the cost of a spare fan will be minimal.

Air Carbon Units. The air carbon units were designed for a gas flow of 550 acfm, versus the actual flow of about 30 acfm. Like the HEME, this is inexpensive protection, and maintaining a similar ratio of carbon-to-gas flow will not significantly increase capital or operating cost.

APCS Gas Piping. The piping can change from carbon steel to CPVC at the exit of the Primary Condenser. The WESP and Primary Condenser bypass piping can be eliminated. All the gas piping in the Guam BCDP was much larger than necessary. The gas piping after the Primary Condenser could all be changed to 2 inches. Gas flows on the PFDs should be referenced to determine the proper pipe size.

Preventing air leaks in the APCS is very important, and all the piping and equipment should be installed as air-tight as possible. From the RKR to the ID Fan, the APCS operates under a vacuum, and any leak will draw air (and oxygen) into the system.

Thermal Oxidizer. If the BCDP is operated in an area with strict VOC emission standards, a thermal oxidizer after the carbon could be used to destroy the VOCs. A thermal oxidizer should also reduce the odor that comes from the plant. Because of the low stack gas flow, the unit would not be very expensive.

Boiler. The boiler was designed for 2,760 pounds per hour of steam. Actual usage never exceed 1,000 pounds per hour, and usually ran around 600 pounds per hour. A 1,000 pound per hour boiler would be sufficient for this size plant.

6.2.5 Wastewater Treatment Plant

Much of the WWTP was constructed from equipment left over from the demonstration plant and surplus equipment. Tank capacities, pump sizes, and other parameters in the Guam BCDP plant are generally not at their optimum size, but they functioned acceptably.

Proposed WWTP Design. The solids removal portion of the Guam WWTP was a standard flocculation and clarification system. The wastewater, however, contained insoluble organics that were not readily removed from the water by this type of plant. A more efficient design for a plant to treat the BCDP wastewater is shown in Figure 6-2.

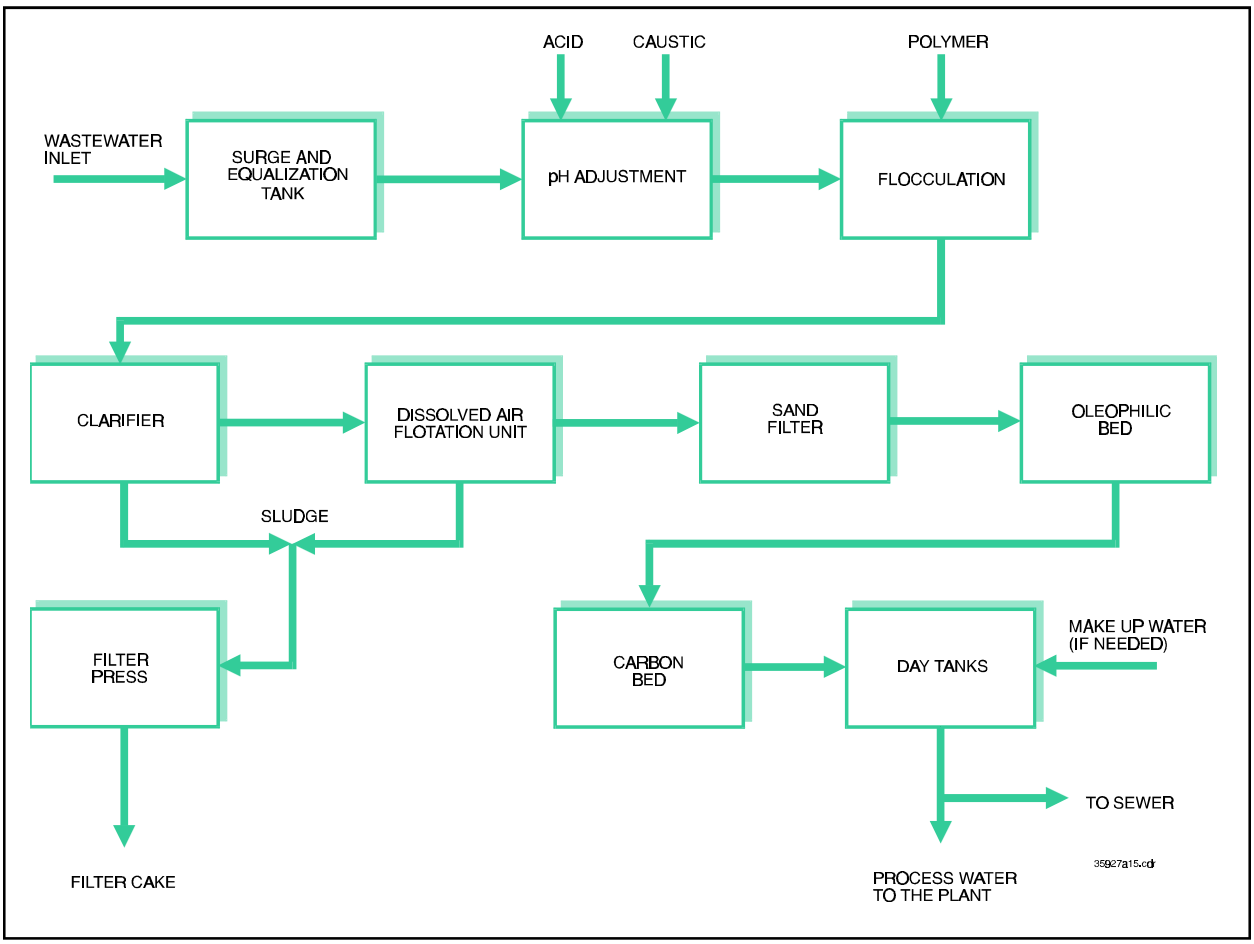

Figure 6-2
Proposed WWTP for the BCDP

The proposed plant uses settling followed by dissolved air flotation to remove solids. This is the same solids removal system used in petroleum refinery WWTPs which treat a wastewater that is similar to the BCDP wastewater. The water contains solids, dissolved organics, and non-water soluble organics.

Normally, dust from soil has a higher density than water and will sink. This type of material is easily removed in a clarifier. Some of the insoluble oils in the water, however, are lighter than water. When these light oils and the dust particles are mixed, some of the particles will be "wetted" with the oil. The insoluble oil is hydrophobic, and will preferentially partition from the water to the solids. When the heavier than water solids mix with the lighter than water oil, the resulting particle can float, sink, or stay suspended, depending on the composition of the particle. This type of solid exists in the water leaving the WESP, the main source of water to the WWTP.

Solids that will settle are removed in the clarifier. As shown in Figure 6-2, the clarifier effluent, which contains floating and suspended solids, flows to the dissolved air flotation unit. In the dissolved air flotation unit, air is sparged into the water to produce very small air bubbles. These bubbles slowly rise through the water, and attach to any particle they contact. When one or more bubbles attaches to a suspended particle, the particle's buoyancy is increased and the particle floats to the surface. Solids and oils are continuously skimmed off the surface of the water in the dissolved air flotation unit.

Water leaving the dissolved air flotation unit passes through a sand filter to remove any residual suspended solids. After the sand filter, the water treatment is the same as that which was used in the Guam BCDP after the bag filters. The sand filter in the proposed system eliminates the need for the bag filters. The improved solids removal should eliminate the plugging of the oleophilic and carbon media with fines that was experienced at the Guam BCDP.

Day tanks are provided for storing the water in the proposed design. If excess water is generated, two tanks are required to store the water. After one tank is filled, the effluent is diverted to the second tank. The full tank is sampled and analyzed to insure that the treatment standards are met. When the tank is discharged, effluent can be switched back to the empty tank, and the second tank is sampled and analyzed. If the plant is a net water consumer, only one tank is necessary, and make-up water will have to be supplied.

WWTP Operation. The Guam BCDP was a net water user because of the large amount of water sprayed on the reactor product for dust suppression and to cool the product. As discussed earlier in this section, dust suppression and cooling of the reactor product in the next generation unit will probably be handled by more efficient methods that will use much less water. Water enters the BCDP process as steam from the boiler or moisture cooked off the soil. Non-process water streams include storm water and decontamination washdown water.

Moisture from the feed soil will probably be returned to the reactor product in the cooling and dust suppression step. The largest source of water added to the process is steam from the boiler. Using treated wastewater as boiler feed water would eliminate this water as a wastewater stream. Since most of the wastewater is condensate, the quality should be acceptable for use as boiler feed water. The boiler blowdown could not be added to the wastewater plant because it would be very high in suspended solids. The blowdown would have to be isolated and checked for PCBs before being discharged into the sewer. Alternatively, the blowdown could be sprayed on the contaminated soil prior to processing.

Non-process water flows (decontamination and storm water flows) must be estimated on a site-specific basis. Treated water could be used for decontamination, and careful design should minimize the amount of storm water requiring treatment. If recycle water can be used for boiler feed water, a zero water discharge plant should be possible. Sufficient carbon treatment would have to be done to remove the non-PCB organics if the treated water is used as boiler feedwater, and this would increase water carbon usage.

6.2.6 Minimizing Residuals

No attempt was made to process the cyclone fines or filter cake in the RKR, but this would have probably resulted in a reduction of residuals, especially the reprocessing of filter cake. Even if a percentage of the reprocessed filter cake returned to the system as fines, most of the fines would be collected as dry cyclone fines instead of wet filter cake. The filter cake is not dusty and could be added directly to the feed soil.

No testing of the effects of different RKR sweep gas flows on fines production was done on the Guam unit. The initial sweep gas flow was about 105 pounds an hour of steam and that flow was maintained throughout the project. Lowering the sweep gas flow would reduce the gas velocity through the kiln and should reduce the quantity of fines being swept out of the kiln. A minimum

sweep gas velocity is required to remove the PCBs being driven off the soil. A velocity higher than this minimum only increases the quantity of contaminated residuals.

Acid was effective in reducing the quantity of residuals on Guam because the soil was high in coral (which is soluble in acid). This should be tested on other sites to see if significant quantities of the residuals being generated are acid soluble. If treated wastewater is used as boiler feed water, soluble salt added to the water by this acid addition could be a problem. The effectiveness of acid addition must be evaluated on a site-specific basis.

7.0 References

1. Clark, David G., et al., 1996, "Ensure Process Vent Collection Systems Safety," Chemical Engineering Progress, January 1996.

2. Gallagher, W. E., et al., 1989, "Results of a Field Scale Test of an APEG Reactor for Chemically Degrading PCBs in Contaminated Soil," 82nd Annual Meeting and Exhibition of the Air and Waste Management Association, Anaheim, California.

3. Harding-Lawson Associates (HLA), 1990, PCB Sampling and Analysis, Navy Public Works Center, Guam, Mariana Islands, HLA-02176, 299.06, Harding-Lawson Associates, Pearl City, Hawaii.

4. National Fire Protection Association, 1992, "Standard on Explosion Prevention Systems," NFPA 69, NFPA-Quincy, Massachusetts.

5. Naval Energy and Environmental Support Agency (NEESA), 1983, "Initial Assessment Study of the Guam Naval Complex," Vol. I, APRA Harbor, Port Hueneme, California.

6. Pacific Northwest National Laboratory (PNNL), 1996, "Demonstration of Base Catalyzed Decomposition Process, Navy Public Works Center, Guam, Mariana Islands."

7. Perry and Green, Chemical Engineering Handbook, 6th Edition.

8. Shelton, Harold C, 1995, "Estimating the Lower Explosive Limits of Waste Vapors," Environmental Engineering World, May-June 1995.

9. Taniguchi, S., et al., 1995, "Chemical Remediation of PCB-Contaminated Soil," Dioxin-95 Proceedings, Vol. 26, page 411-416. Twelfth International Symposium on Chlorinated Dioxins and Related Compounds, August 21-25, 1995, Edmonton, Canada.

11. Terres, S., et al., 1996, "Base Catalyzed Decomposition Process Proven on Guam," Tri-Services Environmental Workshop, Hershey, Pennsylvania.

12. Zabetakis, M. B., 1965, "Flammability Characteristics of Combustible Gases and Vapors," U.S. Department of the Interior, Bureau of Mines, Bulletin 627.

13. Risk Reduction Engineering Laboratory (RREL), 1991, "Engineering Bulletin Thermal Desorption Treatment," EPA/54012-91/008, Cincinnati, Ohio.

14. Fox, R. D., et. al, 1991, "Thermal Treatment for the Removal of PCBs and other Organics from Soil," Environmental Progress, Vol. 10, No. 1.

15. McDaniel, Paul, P.E., et al., 1995, "BCDP "Rapid Start" Source Emission Test Result, Bldg. 3009 Site Naval Station Sumay, Guam," SSR-2164-ENV, Naval Facilities Engineering Service Center, Port Hueneme, California, November 1995.

16. Saunders, Bob, et al., 1996, "BCDP Source Emission Test Result at Building 3009 Site Naval Station, Sumay, Guam," SSR-2243-ENV, Naval Facilities Engineering Service Center, Port Hueneme, California, August 1996.