M67001.AR.005470
MCB CAMP LEJEUNE
5090.3a

FINAL EXPANDED SITE INVESTIGATION REPORT MILITARY MUNITIONS RESPONSE PROGRAM SITE UXO-02 UNNAMED EXPLOSIVE CONTAMINATED RANGE MCB CAMP LEJEUNE NC

10/1/2012

CH2M HILL

Final

Expanded Site Investigation Report
Military Munitions Response Program Site UXO-02 – Former Unnamed Explosive Contaminated Range, ASR# 2.201

Marine Corps Installations East–Marine Corps Base Camp Lejeune
Jacksonville, North Carolina

Contract Task Order WE41

October 2012

Prepared for

Department of the Navy
Naval Facilities Engineering Command
Mid-Atlantic Division

Under the

NAVFAC CLEAN 1000 Program
Contract N62470-08-D-1000

Prepared by

CH2MHILL

Knoxville, Tennessee

NORTH CAROLINA PROFESSIONAL SEAL 038950 ENGINEER THOMAS M. ROTH

10/8/2012

Executive Summary

This report documents the findings of the Expanded Site Investigation (ESI) conducted at United States Marine Corps Military Munitions Response Program (MMRP) Site Unexploded Ordnance (UXO)-02 by CH2M HILL under the Naval Facilities Engineering Command (NAVFAC) Comprehensive Long-Term Environmental Action—Navy (CLEAN) Contract N62470-08-D-1000, Contract Task Order (CTO) WE41.

Site UXO-02 is a 127-acre area located within a south-central portion of the Marine Corps Installations East-Marine Corps Base Camp Lejeune (MCIEAST–MCB CAMLEJ) known as Stone Bay (USACE, 2001) (**Figure 2-1**). Installation Restoration (IR) Site 69, the Rifle Range Chemical Dump, is located within the boundary of Site UXO-02 and consists of approximately 14 acres of wooded land. The site topography ranges from low-lying gently undulating terrain to the north, deeply incised gullies in the south, and steep bluffs bordering the New River. The local topographic high, of roughly 36 feet above mean sea level (amsl) lies within the hummocky terrain of IR Site 69. The majority of Site UXO-02 is wooded, with some lightly forested areas supporting dense undergrowth and other more densely forested areas with sparse undergrowth. Much of the low-lying area consists of wetlands that discharge into the New River. An unnamed tributary of the New River is located north of IR Site 69 and Everett Creek is located south of Site UXO-02. The only cultural features within UXO-02 are the fenced perimeter of IR Site 69 (installed in the 1990s), a decommissioned power line extending from the fenced perimeter northward, paralleling the New River, and a poorly maintained access trail (suitable for high-clearance vehicles) from Everett Creek Road. Training maneuvers are occasionally conducted in portions of the site outside of the Site 69 fence and access to Site UXO-02 is strictly controlled.

The purpose of the ESI was to address the recommendations of a Preliminary Assessment/Site Inspection (PA/SI) at Site UXO-02 (CH2M HILL, 2012) and a Supplemental Investigation at Site 69 (CH2M HILL, 2011a). The PA/SI report recommended additional investigation of metals in groundwater and an intrusive investigation to assess the nature of the geophysical anomalies representing potential subsurface munitions and explosives of concern (MEC). The Site 69 Supplemental Investigation recommended additional surface soil and sediment sampling and analysis for pesticides to support further evaluation of potential ecological risks.

The objectives of the Site UXO-02 ESI were as follows:

- Further evaluate the distribution and potential risks to human health and the environment of metals, pesticides, and hexavalent chromium in site media. In addition, total organic carbon (TOC) in sediment was analyzed to support the Baseline Ecological Risk Assessment (BERA).
- Evaluate the nature of geophysical anomalies previously identified at the site.

Environmental Investigation

Six surface soil, eight sediment, and ten groundwater samples were collected during the ESI at locations within and west of the Site UXO-02 boundary, outside of the Site 69 perimeter fence. The surface soil and sediment samples were analyzed for selected pesticides, based upon the previous investigation results. Groundwater samples were analyzed for total metals, and three of the wells located near New River were also analyzed for dissolved metals, including dissolved hexavalent chromium.

The surface soil samples were analyzed for endrin and gamma-BHC and neither were detected in any of the samples. The chlorinated pesticides 4,4'-DDD, 4,4'-DDE and 4,4'-DDT were detected in five of nine sediments samples, including the background sample, at concentrations below the screening criteria. Aluminum, antimony, chromium, cobalt, iron, and manganese concentrations exceeded twice the mean base background (BBG) groundwater concentration and the NCGWQS or the Adjusted USEPA Tap Water RSL in one or more groundwater samples. In filtered groundwater samples, only cobalt concentrations exceeded twice the mean BBG and the Adjusted USEPA Tap Water RSL.

The ESI analytical results were combined with the Site UXO-02 PA/SI results to evaluate risks to human health and the environment. The Human Health Risk Screening (HHRS) indicated that pesticides detected in Site UXO-02

surface soil, sediment, and metals in surficial aquifer groundwater are not expected to pose an unacceptable risk to potential human receptors. No unacceptable risks to human health are related to constituents detected in subsurface soil and surface water.

The Site 69 Supplemental Investigation found that future use of groundwater from the surficial aquifer as a residential potable water supply could result in risks or hazards above USEPA's acceptable risk range and hazard levels. The cancer risk was primarily associated with ingestion of vinyl chloride (VC), with a lesser contribution from several additional VOCs and pesticides/PCBs. The non-carcinogenic hazard was primarily associated with ingestion of cis-1,2-dichloroethene (DCE), iron, and manganese. However, the Site 69 Supplemental Investigation risk assessment indicated that iron and manganese should not be retained as contaminants of potential concern (COPCs) for surficial aquifer groundwater because they are below their respective upper limits that are likely to pose a risk of adverse effects (NAS, 2001), and/or they are within BBG concentration ranges.

Future potable use of groundwater from the Castle Hayne aquifer at Site 69 by residents and industrial workers would also result in risks and hazards above USEPA's acceptable risk range and hazard level. Non-carcinogenic hazards are primarily associated with cis-1,2-DCE, trans-1,2-DCE, VC, and thallium. Carcinogenic risks are primarily associated with VC and chromium, with a lesser risk from 1,2-dichloroethane (DCA), aroclor-1260, heptachlor epoxide, and even a lesser risk from 1,2,4-trichlorobenzene, chloroform, trichloroethene (TCE), and dieldrin.

The BERA identified no unacceptable risks to populations of ecological receptors due to exposure to pesticides in surface soil and sediment.

MEC Intrusive Investigation Results

The PA/SI digital geophysical mapping (DGM) survey of approximately 10 percent (approximately 11.3 acres) of Site UXO-02 yielded a total of 1,463 geophysical anomalies representing potential subsurface MEC. Intrusive investigation of these anomalies during the ESI found one MEC item (Grenade, MK II, Hand, Practice, Standard) that was determined to be a discarded military munition (DMM) and later disposed of by controlled detonation. Material potentially presenting an explosive hazard (MPPEH) found at the site was related to the following types of munitions:

- Five flares (M127A1, Star Parachute)
- Six smoke grenade pieces (no nomenclature)
- Five smoke grenades (M18 Smoke, Hand)
- Four practice grenades (MK II, Hand, Practice, Standard)
- One 40-millimeter (mm) cartridge case
- Over 250 various small arms cartridge casings from 25 locations

Recommendations

Based on the previously presented conclusions, no further action is recommended for the portion of UXO-02 located outside of the Site 69 perimeter fence. This ESI concludes the evaluation of UXO-02 under the MMRP and no unacceptable risks were identified from exposure to MEC and munitions constituents (MC). The remaining environmental impacts to be further assessed are associated with potential risks from exposure to waste and the groundwater plume (Site 69). A Feasibility Study, Proposed Remedial Action Plan, and ROD are underway to address these risks. The Final ROD for Site 69 will also document site closure for the surrounding UXO-02 area.

Because it is not possible to provide 100 percent assurance that all MEC items have been detected and removed, it would be prudent to provide "3R" munitions awareness training to those conducting intrusive activities within the MRS and to provide on-call support from MCIEAST–MCB CAMLEJ EOD or a qualified UXO contractor for inspection and disposal of suspected MEC/MPPEH that may be unearthed.

Contents

Executive Summary ..... **iii**

Acronyms and Abbreviations ..... **ix**

1 Introduction **1-1**
1.1 Purpose 1-1
1.2 Objectives and Approach 1-1
1.3 Report Organization 1-1

2 Site Background **2-1**
2.1 MCB CamLej Location and Description 2-1
2.2 Site Setting 2-1
2.3 Site History 2-1
2.4 Previous Investigations 2-2
2.4.1 Site UXO-02 Preliminary Assessment/Site Inspection 2-2
2.4.2 Site 69 Supplemental Investigation 2-7
2.4.3 Site UXO-02 Expanded Site Investigation Work Plan 2-8
2.5 Regional Climate 2-9
2.6 Regional Geology and Hydrogeology 2-9
2.7 Site Geology and Hydrogeology 2-9

3 Field Investigation Activities **3-1**
3.1 Field Investigation Activities Summary 3-1
3.2 Site Preparation and Support 3-1
3.2.1 MEC Avoidance 3-1
3.2.2 Buried Utility Location 3-1
3.2.3 Vegetation Clearing 3-1
3.2.4 Surveying 3-1
3.3 Environmental Investigation Activities 3-2
3.3.1 Surface Soil Sampling 3-2
3.3.2 Sediment Sampling 3-2
3.3.3 Monitoring Well Installation 3-2
3.3.4 Groundwater Sampling 3-3
3.3.5 Decontamination of Sampling Equipment 3-3
3.3.6 Investigation-Derived Waste Management 3-4
3.3.7 Data Validation 3-4
3.4 MEC Intrusive Investigation Activities 3-4
3.4.1 Field Activities 3-4
3.4.2 Quality Control and Quality Assurance 3-4
3.4.3 Operations in Populated and Sensitive Areas 3-5

4 Investigation Results **4-1**
4.1 Environmental Investigation Results 4-1
4.1.1 Surface Soil 4-1
4.1.2 Sediment 4-1
4.1.3 Groundwater 4-1
4.2 MEC Intrusive Investigation 4-2

5 Human Health Risk Evaluation 5-1
5.1 Human Health Risk Screening for Groundwater 5-1
5.1.1 Human Health Risk Screening Methodology 5-1
5.1.2 Human Health Risk Screening Results 5-2
5.2 Soil and Sediment Qualitative Evaluation 5-3
5.3 Post-Detonation Sampling 5-4
5.4 Evaluation of Explosive Hazards 5-4
5.5 Summary 5-5

6 Baseline Ecological Risk Assessment 6-1

7 Conclusions and Recommendations 7-1
7.1 Conclusions 7-1
7.1.1 Environmental Investigation 7-1
7.1.2 MEC Intrusive Investigation 7-1
7.2 Recommendations 7-2

8 References 8-1

Appendixes

A Previous Investigations Results
B Soil Boring Logs, Well Completion Diagrams, and Well Development Sheets
C Civil Survey Report
D Groundwater Sampling Data Sheets
E Munitions Debris Disposal Documents
F Technical Memorandum: UXO-02 Missed QC Seed Items
G Analytical Data Screening Tables
H MEC Intrusive Investigation Documents
I Human Health Risk Screening Tables
J Baseline Ecological Risk Assessment

Tables

2-1 Summary of Site UXO-02 PA/SI Metals Exceedances in Surface Soil
2-2 Summary of Site UXO-02 PA/SI Metals Exceedances in Site 69 Surface Soil
2-3 Summary of Site UXO-02 PA/SI Metals Exceedances in Subsurface Soil
2-4 Summary of Site UXO-02 PA/SI Metals Exceedances in Site 69 Subsurface Soil
2-5 Summary of Site UXO-02 PA/SI Total Metals Exceedances in Temporary Groundwater Monitoring Wells
2-6 Summary of Site UXO-02 PA/SI Total Metals Exceedances in Permanent Groundwater Monitoring Wells
2-7 Summary of Site UXO-02 PA/SI Dissolved Metals Exceedances in Temporary Groundwater Monitoring Wells
2-8 Summary of Site UXO-02 PA/SI Dissolved Metals Exceedances in Permanent Groundwater Monitoring Wells
2-9 Summary of Site UXO-02 PA/SI Total Metals Exceedances in Surface Water
2-10 Summary of Site UXO-02 PA/SI Dissolved Metals Exceedances in Surface Water
2-11 Summary of Site UXO-02 PA/SI Metals Exceedances in Sediment
2-12 Site UXO-02 PA/SI Human Health Risk Screening Summary
2-13 Site UXO-02 PA/SI Ecological Risk Screening Summary
2-14 Summary of Site 69 Supplemental Investigation Pesticide Exceedances in Surface Soil
2-15 Summary of Site 69 Supplemental Investigation Pesticide Exceedances in Sediment
2-16 Site 69 Supplemental Investigation Human Health Risk Screening Summary for Surface Soil and Sediment
2-17 Site 69 Supplemental Investigation Ecological Risk Screening Summary for Surface Soil and Sediment

2-18 Groundwater Elevation and Well Construction Information

3-1 Summary of Groundwater Field Parameters

4-1 Summary of Analyte Detections in Sediment
4-2 Summary of Total Metals Exceedances in Groundwater
4-3 Summary of Dissolved Metals Exceedances in Groundwater
4-4 Post-Detonation Surface Soil Detection Analytical Results

Figures

1-1 Base Location Map

2-1 Site Location
2-2 Site UXO-02 PA/SI Digital Geophysical Mapping Results
2-3 Site UXO-02 PA/SI Metal Exceedances in Surface Soil
2-4 Site UXO-02 PA/SI Metal Exceedances in Subsurface Soil
2-5 Site UXO-02 PA/SI Metal Exceedances in Groundwater
2-6 Site UXO-02 PA/SI Metal Exceedances in Surface Water
2-7 Site UXO-02 PA/SI Metal Exceedances in Sediment
2-8 Site 69 Supplemental Investigation Exceedances in Soil
2-9 Site 69 Supplemental Investigation Exceedances in Sediment
2-10 Water Table Potentiometric Surface

3-1 Sampling Locations
3-2 Intrusive Investigation Locations

4-1 Metal Exceedances in Groundwater
4-2 Locations of MEC and MPPEH

Acronyms and Abbreviations

µg/dL	microgram(s) per deciliter
µg/kg	microgram(s) per kilogram
µg/L	microgram(s) per liter
AI	adequate intake
amsl	above mean sea level
ASR	Archive Search Report
Baker	Baker Environmental, Inc.
BBG	Base background
BERA	Baseline Ecological Risk Assessment
bgs	below ground surface
BHC	benzene hexachloride
bTOC	below top-of-casing
°C	degree(s) Celsius
CA	chemical agent
CamLej	Camp Lejeune
CERCLA	Comprehensive Environmental Response, Compensation, and Liability Act
CLEAN	Comprehensive Long-Term Environmental Action—Navy
COPC	contaminant of potential concern
COPEC	contaminants of potential ecological concern
CTO	Contract Task Order
CVOC	chlorinated volatile organic compounds
DCA	dichloroethane
DCE	dichloroethene
DDD	dichlorodiphenyldichloroethane
DDE	dichlorodiphenyldichloroethene
DDT	dichlorodiphenyltrichloroethane
DGM	digital geophysical mapping
DMM	discarded military munition
DO	dissolved oxygen
DoD	Department of Defense
DPT	direct-push technology
EcoSSL	Ecological Soil Screening Level
EM61	EM61-MK2 electromagnetic system
ERA	Ecological Risk Assessment
ERS	Ecological Risk Screening
ESI	Expanded Site Investigation
ESS	Explosives Safety Submission
ESV	ecological screening value
°F	degree(s) Fahrenheit
ft/ft	feet/foot per foot
HHRA	Human Health Risk Screening
HHRS	Human Health Risk Screening
HI	hazard index
HNO_3	nitric acid
HQ	hazard quotient

IAS	Initial Assessment Study
ID	identification; inner-diameter
IDW	investigation-derived waste
IEUBK	Integrated Exposure Uptake Biokinetic
IR	Installation Restoration
L/day	liter(s) per day
LUC	land use control
MARSOC	Marine Corps Special Operations Command
MC	munitions constituents
MCB	Marine Corps Base
MCL	maximum contaminant level
MD	munitions debris
MDAS	material documented as safe
MEC	munitions and explosives of concern
mg/day	milligram(s) per day
mg/kg	milligram(s) per kilogram
mg/L	milligram(s) per liter
mm	millimeter(s)
MMRP	Military Munitions Response Program
MPPEH	material potentially presenting an explosive hazard
MRP	Munitions Response Program
mV	millivolt(s)
NAS	National Academy of Sciences
NAVFAC	Naval Facilities Engineering Command
Navy	United States Navy
NC2B-SW	North Carolina Administrative Code 2B SW Human Health and Water Supply values
NCAC	North Carolina Administrative Code
NCDENR	North Carolina Department of Environment and Natural Resources
NCGWQS	North Carolina Groundwater Quality Standards
NC SSL	North Carolina soil screening level
NRWQC	National Recommended Water Quality Criteria
ORP	oxidation-reduction potential
OU	operable unit
PA/SI	Preliminary Assessment/Site Inspection
PCB	polychlorinated biphenyl
PETN	pentaerythritol tetranitrate
PPE	personal protective equipment
PVC	polyvinyl chloride
QA	quality assurance
QC	quality control
ROD	record of decision
RSL	Regional Screening Level
SI	Site Investigation
SVOC	semivolatile organic compound
TAL	target analyte list
TCE	trichloroethene
TOC	total organic carbon; top of casing

UCL	upper confidence limit
USACE	United States Army Corps of Engineers
USAE	USA Environmental, Inc.
USEPA	United States Environmental Protection Agency
UXO	unexploded ordnance
UXOQCS	Unexploded Ordnance Quality Control Specialist
VC	vinyl chloride
VOC	volatile organic compound
YSI	YSI, Inc.

SECTION 1

Introduction

This report documents the findings of the Expanded Site Investigation (ESI) conducted at United States Marine Corps Military Munitions Response Program (MMRP) Site Unexploded Ordnance (UXO)-02 – Former Unnamed Explosive Contaminated Range (Archive Search Report [ASR] #2.201) at Marine Corps Installations East–Marine Corps Base Camp Lejeune (MCIEAST–MCB CAMLEJ) in Jacksonville, North Carolina. The 127-acre site includes Operable Unit (OU) 14, Installation Restoration (IR) Site 69 - Rifle Range Chemical Dump (**Figure 1-1**).

The Site UXO-02 ESI was conducted by CH2M HILL under the Naval Facilities Engineering Command (NAVFAC) Comprehensive Long-Term Environmental Action—Navy (CLEAN) Contract N62470-08-D-1000, Contract Task Order (CTO) WE41.

1.1 Purpose

The purpose of the ESI was to address the recommendations of a Preliminary Assessment/Site Inspection (PA/SI) at Site UXO-02 (CH2M HILL, 2012) and a Supplemental Investigation at Site 69 (CH2M HILL, 2011a). These investigations were conducted in 2010 following the Comprehensive Environmental Response, Compensation, and Liability Act (CERCLA) process. The UXO-02 PA/SI report recommended additional investigation of the nature and extent of metals in groundwater, and intrusive investigation of geophysical anomalies representing potential subsurface munitions and explosives of concern (MEC). The Site 69 Supplemental Investigation recommended further evaluation of potential ecological risks due to the presence of pesticides in surface soil and sediment.

1.2 Objectives and Approach

The objectives of the Site UXO-02 ESI were as follows:

- Further investigate the distribution of metals in groundwater and pesticides in surface soil and sediment.
- Evaluate potential risks to human health and the environment from exposure to these compounds.
- Evaluate the potential presence of subsurface MEC through intrusive investigation of previously identified geophysical anomalies in areas located outside of the Site 69 boundary.

The ESI field activities were conducted in accordance with the ESI Work Plan (CH2M HILL, 2011c) and the Munitions Response Program (MRP) Master Work Plan (CH2M HILL, 2008).

1.3 Report Organization

This ESI report is organized as follows:

- Section 1 – Introduction - provides the objectives of the ESI and the tasks performed during the associated field effort
- Section 2 – Site Background - presents a brief summary of the site description, history, and physical setting
- Section 3 – Field Investigation Activities - provides a summary of the field activities conducted during the ESI
- Section 4 – Investigation Results - presents the ESI results
- Section 5 – Human Health Risk Screening - provides a summary of the risk screening process and findings
- Section 6 – Ecological Risk Assessment - provides a summary of the risk assessment process and findings
- Section 7 – Conclusions and Recommendations - presents the conclusions and recommendations for Site UXO-02, based upon the results of the PA/SI and ESI environmental sampling and MEC intrusive investigation
- Section 8 – References - presents the documents cited in this report

Previous Investigation results, field documentation, munitions debris (MD) disposal documentation, laboratory data and processing documentation, intrusive investigation results, and information supporting the risk evaluations are contained in the appendixes.

VBO \\NORTHEND\PROJ\USNAVFACENGCOM\CAMPLEJEUNE\MAPFILES\WE41\MULTIPLE_MMRP_SITES\EXPANDED_SI\FIGURE_1_1_PROJECT_LOCATION_MAP_UXO_02.MXD JCROCKETT 10/1/2012 7:59:37 AM

Legend

- Munitions Response Site UXO-02 Boundary
- Installation Restoration Site 69 Boundary
- Highways
- Installation Boundary

N

0 7,500 15,000 30,000 Feet

1 inch = 15,000 feet

Figure 1-1
Base Location Map
Site UXO-02 Expanded SI Report
MCIEAST-MCB CAMLEJ
North Carolina

CH2MHILL

SECTION 2

Site Background

This section summarizes regional and site-specific information, including location, site setting, physical characteristics, and history.

2.1 MCIEAST–MCB CAMLEJ Location and Description

MCIEAST–MCB CAMLEJ covers approximately 236 square miles in Onslow County, North Carolina, and is bisected by the New River, which flows in a southeasterly direction toward the Atlantic Ocean (**Figure 2-1**). Construction of MCIEAST–MCB CAMLEJ began in 1941 with the objective of developing the world's most complete amphibious training base. The mission of MCIEAST–MCB CAMLEJ is to maintain combat-ready units for expeditionary deployment. MCIEAST–MCB CAMLEJ provides housing, training facilities, logistical support, and administrative supplies for Fleet Marine Force units and other assigned units. The Base and surrounding community are home to an active-duty, dependent, retiree, and civilian population of approximately 180,000 people. Land use surrounding MCIEAST–MCB CAMLEJ is varied. Mainly commercial properties are located along the northern boundary, with a mix of agricultural lands and residential areas located along the eastern and western boundaries of the Base. The southern boundary of MCIEAST–MCB CAMLEJ extends to the New River and Atlantic Ocean.

2.2 Site Setting

Site UXO-02 is a 127-acre area located within a south-central portion of the Base known as Stone Bay (USACE, 2001) (**Figure 2-1**). IR Site 69, the Rifle Range Chemical Dump, is located within the boundary of Site UXO-02 and consists of approximately 14 acres of wooded land. The site topography ranges from low-lying gently undulating terrain to the north, deeply incised gullies in the south, and steep bluffs bordering the New River. The local topographic high, of roughly 36 feet above mean sea level (amsl) lies within the hummocky terrain of IR Site 69. The majority of Site UXO-02 is wooded, with some lightly forested areas supporting dense undergrowth and other more densely forested areas with sparse undergrowth. Much of the low-lying area consists of wetlands that discharge into the New River. An unnamed tributary of the New River is located north of IR Site 69 and Everett Creek is located south of Site UXO-02. The only cultural features within UXO-02 are the fenced perimeter of IR Site 69 (installed in the 1990s), a decommissioned power line extending from the fenced perimeter northward, paralleling the New River, and a poorly maintained access trail (suitable for high-clearance vehicles) from Everett Creek Road. Access to Site UXO-02 is restricted by a guarded Marine Corps Forces Special Operations Command (MARSOC) security gate near the Stone Bay entrance and a second locked gate on Everett Creek Road near the most western point of the Site UXO-02 boundary.

2.3 Site History

Site UXO-02 was identified in the Final Range Identification and Preliminary Range Assessment as an "…unknown UXO contaminated area…" in range overlay maps starting in 1987 (USACE, 2001, Plates 18 and 20). Plate 4 of the 1946 range overlay map indicates that Mortar Range L-2 was present from 1945 to 1946 along the southern boundary of Site UXO-02. However, during interviews with a former Base Range Control Officer, it was stated that the mortar range was never used as such and the site was used for platoon-level maneuvers from the 1960s to present (Redmond, 2011).

IR Site 69, the Rifle Range Chemical Dump was first identified in the 1983 Basewide Initial Assessment Study (IAS) as a priority site for further investigation based on historical disposal activities. From 1950 to 1976, Site 69 was reportedly used for the disposal of chemical wastes, including polychlorinated biphenyls (PCBs), solvents, and pesticides. In 1970, 5-gallon cans and 55-gallon drums of dichlorodiphenyltrichloroethane (DDT), trichloroethene (TCE), and calcium hypochlorite were placed together in a common pit. An explosion occurred as soil was being placed over the containers, causing a brush fire and the ejection of drums as far as 120 feet from the pit (Water and Air Research, 1983). Site 69 may also have a history of chemical agent (CA) disposal. Discarded M9 CA detector kits were found during a 1982 site visit (Water and Air Research, 1983). Formal documentation of

disposal methods, particularly related to CA, is unavailable. One CA disposal event allegedly occurred in 1953 or 1954, when approximately 50 to 60 drums of suspected CA were reportedly delivered to the Site and disposed of in two trenches, each approximately 20 feet deep (CH2M HILL, 2011a).

The source area at Site 69 is presumed to be the waste disposal area. However, the waste area has not been investigated due to the potential presence of CA. The primary contaminants in the groundwater at Site 69 are chlorinated volatile organic compounds (CVOCs). An Interim Record of Decision (ROD) for OU 14 was signed in 2000 (Baker, 2000). The ROD addressed soil, groundwater, and waste and was issued as Interim based on the potential for CA and the location within UXO-02 that was being addressed under the MMRP. Land use controls (LUCs) are in-place at Site 69 to restrict soil and groundwater intrusive activities and prohibit non-industrial land use. Aquifer use controls prevent use of shallow and Castle Hayne groundwater within 1000 feet of Site 69 (Baker, 2000). Perimeter fencing restricts access to the waste area at Site 69. Supplemental investigations were conducted at Site 69 in 2010 to define the current extent of chlorinated volatile organic compound (CVOC) groundwater contamination and at UXO-02 to evaluate potential range-related impacts. The results are discussed in the following subsections and a Final ROD is planned to address both Site 69 and UXO-02 based on the results of the previous investigations and this ESI. **Figure 2-1** depicts the relationship between Site 69 within UXO-02 and includes the waste disposal area, groundwater plume extent, and the LUC and fence boundaries.

2.4 Previous Investigations

ASRs and investigations conducted at Site UXO-02 prior to 2010 are summarized in the PA/SI Report (CH2M HILL, 2012). Investigations conducted at Site 69 prior to 2010 are summarized in the Site 69 Supplemental Investigation Report (CH2M HILL, 2011a).

2.4.1 Site UXO-02 Preliminary Assessment/Site Inspection

A PA/SI at Site UXO-02 was conducted in February and March 2010 to evaluate the potential presence and nature of impacts to environmental media resulting from historical munitions use at the site and to determine whether additional investigation and/or remediation activities were necessary.

2.4.1.1. Digital Geophysical Mapping

A digital geophysical mapping (DGM) survey completed in February 2010 using a single-coil EM61-MK2 electromagnetic system (EM61) covered approximately 10 percent (11.3 acres) of Site UXO-02 as transects distributed across accessible portions of the site outside of the Site 69 fence. A total of 1,463 geophysical anomalies were identified as representing potential subsurface MEC (CH2M HILL, 2012). **Figure 2-2** illustrates the DGM area and the distribution of geophysical anomalies representing potential subsurface MEC.

The PA/SI Report recommended that an intrusive investigation be performed to assess the nature of the identified geophysical anomalies.

2.4.1.2. Environmental Investigation

Sample collection was conducted in accordance with the PA/SI Work Plan (CH2M HILL, 2009). Environmental sampling for the 2010 PA/SI was limited to munitions constituents (MC) analysis and consisted of:

- The collection of a total of 205 surface soil samples at a depth of 0 to 2 inches below ground surface (bgs) using the TR-02-1 approach.
- The collection of one unsaturated subsurface soil sample from each of 31 soil cores at depths ranging from 1 to 9 feet bgs, just above the water table.
- The collection of groundwater samples from 28 newly installed temporary monitoring wells and from seven existing monitoring wells.
- The collection of ten surface water and ten sediment samples at co-located sites outside of the Site 69 fence.

All samples were analyzed for explosives residues including pentaerythritol tetranitrate (PETN) and nitroglycerin (SW-846 United States Environmental Protection Agency [USEPA] Method 8330), perchlorate (SW-846 USEPA Method 6850), and target analyte list (TAL) metals (SW-846 USEPA Methods 6010B and 7471A). Additional

analyses for dissolved metals (SW-846 USEPA Method 6010B) were conducted for surface water samples and groundwater samples collected from 13 of the temporary monitoring wells and from seven pre-existing wells. The following subsections summarize the laboratory analytical data for the soil, groundwater, surface water, and sediment samples collected at Site UXO-02. Analytical data for detected analytes are presented in **Appendix A**.

Soil

Following the third-party data validation of the laboratory analytical data, surface and subsurface soil samples were screened against the following standards:

- North Carolina soil screening levels (NC SSLs)
- Adjusted USEPA Industrial and Residential Regional Screening Levels (RSLs) for Chemical Contaminant Tables (USEPA, 2010a)
- MCIEAST–MCB CAMLEJ background soil concentrations (twice the mean Base background [BBG] soil concentration), only available for inorganic analytes (Baker, 2001).

The RSLs for non-carcinogenic compounds were adjusted by dividing by 10 to conservatively account for exposure to multiple analytes. The methodology for calculating NC SSLs for contaminant migration from soil to groundwater was developed to identify chemical concentrations in soil that have the potential to impact groundwater. The NC SSLs are taken from the Federal Remediation Branch Target Screening Values (NCDENR, 2010a).

Figures 2-3 and **2-4** illustrate the respective locations of the surface and subsurface soil samples where target analytes were detected at concentrations greater than twice the mean BBG concentration <u>and</u> greater than at least one of the other screening levels (NC SSLs or the Adjusted RSLs).

2.4.1.3. Surface Soil

- Explosives Residues

  Nitroglycerin was the only explosives residue detected. The detection occurred in one sample located within the Site 69 fence, and the concentration exceeded the Adjusted Residential Soil RSL. Explosives residues were not detected in samples collected from the portion of Site UXO-02 situated outside the fenced perimeter of IR Site 69.

- Metals

  Tables 2-1 and **2-2** present summaries of analytes that exceeded screening criteria in surface soil sampling locations outside and inside the fenced perimeter of IR Site 69, respectively.

2.4.1.4. Subsurface Soil

- Explosives residues and perchlorate

  These analytes were not detected in any of the subsurface soil samples collected from Site UXO-02.

- Metals

  Table 2-3 presents a summary of metals that exceeded screening criteria in subsurface soil sampling locations outside the fenced perimeter of IR Site 69. **Table 2-4** presents a summary of metals that exceeded screening criteria in subsurface soil sampling locations inside the fenced perimeter of IR Site 69.

Groundwater

This section presents the results of laboratory analysis of groundwater samples collected from the 28 temporary surficial aquifer monitoring wells and seven permanent surficial aquifer monitoring wells. In addition, dissolved metals samples were collected from 13 of the temporary surficial aquifer monitoring wells that exhibited elevated turbidity readings and seven of the permanent surficial aquifer monitoring wells.

Groundwater results were screened against the North Carolina Groundwater Quality Standards (NCGWQS) (NCDENR, 2010b), Adjusted USEPA Tap Water RSLs (USEPA, 2010a), and MCIEAST–MCB CAMLEJ background

groundwater concentrations (twice the mean BBG groundwater concentration) (Baker, 2002). The RSLs for non-carcinogenic compounds were adjusted by dividing by 10 to conservatively account for exposure to multiple analytes. The NCGWQS screening values are the maximum allowable concentrations resulting from any discharge of contaminants to the land or waters of the state that may be tolerated without creating a threat to human health or otherwise rendering the groundwater unsuitable for its intended purpose.

Figure 2-5 depicts the locations of groundwater samples that contained target analytes at concentrations greater than twice the mean BBG concentration and greater than at least one of the regulatory screening levels**.**

- **Explosives residues and perchlorate**

  These analytes were not detected in any of the groundwater samples collected at Site UXO-02.

- **Total Metals**

  Table 2-5 summarizes the analytical results for total metals with concentrations that exceeded screening criteria in one or more samples collected from the temporary surficial aquifer monitoring wells. **Table 2-6** summarizes the analytical results for total metals with concentrations that exceeded screening criteria in one or more samples collected from the permanent surficial aquifer monitoring wells.

- **Dissolved Metals**

  Table 2-7 summarizes the analytical results for dissolved metals with concentrations that exceeded screening criteria in one or more samples collected from the temporary surficial aquifer monitoring wells. **Table 2-8** summarizes the analytical results for dissolved metals with concentrations that exceeded screening criteria in one or more samples collected from the permanent surficial aquifer monitoring wells.

Surface Water and Sediment

This section presents the results for laboratory analysis of surface water and sediment samples.

2.4.1.5. Surface Water

Surface water samples were collected from 10 locations. Laboratory analytical results were screened against North Carolina Administrative Code (NCAC) 2B SW Human Health and Water Supply values (NC2B-SW), National Recommended Water Quality Criteria (NRWQC) (USEPA, 2009), and Adjusted Tap Water RSLs. The RSLs for non-carcinogenic compounds were adjusted by dividing by 10 to conservatively account for exposure to multiple analytes. **Figure 2-6** depicts the locations of surface water samples that exceeded at least one of the screening criteria (such as NC2B-SW, NRWQC, or USEPA Tap Water RSLs)**.**

- **Explosives residues** and **perchlorate**

  These analytes were not detected in any of the surface water samples collected from Site UXO-02.

- **Total Metals**

Table 2-9 summarizes the frequency of exceedance of regulatory criteria for surface water.

TABLE 2-9
Summary of Site UXO-02 PA/SI Total Metals Exceedances in Surface Water
Site UXO-02 Expanded SI Report

Chemical Name	Frequency of Detection (# detected/# analyzed)	Minimum Concentration (µg/L)	Maximum Concentration (µg/L)	Location of Maximum Concentration	Screening Criteria (µg/L)		Frequency of Exceedance
Arsenic	6 / 11	1.3 J	3.1 J	MR02-SW05	NRWQC	0.018	6
Chromium	1 / 11	0.47 J	0.47 J	MR02-SW09	Tap Water RSL	0.043	1
Iron	9 / 11	125	2,140	MR02-SW09	NRWQC	300	7
Manganese	11 / 11	4.6 J	55.4	MR02-SW05	NRWQC	50	3

Notes:
µg/L - microgram(s) per liter
J - Analyte present, value may or may not be accurate or precise
NRWQC - National Recommended Water Quality Criteria
RSL - United States Environmental Protection Agency Adjusted Regional Screening Level

- **Dissolved Metals**

Table 2-10 summarizes the frequency of exceedance of regulatory criteria for surface water.

TABLE 2-10
Summary of Site UXO-02 PA/SI Dissolved Metals Exceedances in Surface Water
Site UXO-02 Expanded SI Report

Chemical Name	Frequency of Detection (# detected/# analyzed)	Minimum Concentration (µg/L)	Maximum Concentration (µg/L)	Location of Maximum Concentration	Screening Criteria (µg/L)		Frequency of Exceedance
Arsenic	4 / 11	1.3 J	3.2 J	MR02-SW02	Tap Water RSL	0.045	4
					NRWQC	0.018	4
Iron	9 / 11	101	1,420	MR02-SW09	NRWQC	300	3
Manganese	11 / 11	4.6 J	54.4	MR02-SW07	NRWQC	50	3

Notes:
µg/L – microgram(s) per liter
J – Analyte present, value may or may not be accurate or precise
NRWQC – National Recommended Water Quality Criteria
RSL – United States Environmental Protection Agency Adjusted Regional Screening Level

2.4.1.6. Sediment

Sediment samples were collected from 10 locations. The laboratory analytical data were screened against the Adjusted USEPA Industrial and Residential RSLs. The RSLs for non-carcinogenic compounds were adjusted by dividing by 10 to conservatively account for exposure to multiple analytes. **Figure 2-7** depicts the locations of sediment samples that exceeded at least one of the screening levels (USEPA Adjusted Residential and Industrial RSLs)**.**

- **Explosives residues and perchlorate**
  These analytes were not detected in any of the sediment samples collected from Site UXO-02.

- **Metals**

Table 2-11 summarizes the frequency of exceedance of regulatory criteria for sediment.

Table 2-11
Summary of Site UXO-02 PA/SI Metals Exceedances in Sediment
Site UXO-02 Expanded SI Report

Chemical Name	Frequency of Detection (# detected / # analyzed)	Minimum Concentration (mg/kg)	Maximum Concentration (mg/kg)	Location of Maximum Concentration	Screening Criteria (mg/kg)		Frequency of Exceedance
Aluminum	11 / 11	2,400	31,400	MR02-SD01	Residential RSL	7,700	9
Arsenic	11 / 11	1 J	5.8	MR02-SD01	Residential RSL	0.39	11
					Industrial RSL	1.6	7
Chromium	8 / 11	3.4	39.7	MR02-SD01	Residential RSL	0.29	8
					Industrial RSL	5.6	7
Iron	11 / 11	1,220	16,800	MR02-SD01	Residential RSL	5,500	7
Vanadium	11 / 11	3.7 J	47.7	MR02-SD01	Residential RSL	39	1

Notes:
J – Analyte present, value may or may not be accurate or precise
mg/kg – milligram(s) per kilogram
RSL – United States Environmental Protection Agency Adjusted Regional Screening Level

2.4.1.7. Risk Screening

A Human Health Risk Screening (HHRS) and an Ecological Risk Screening (ERS) were conducted based on the PA/SI results. The results of the HHRS and ERS are summarized in **Tables 2-12** and **2-13**, respectively.

Human Health Risk Screening

The HHRS for Site UXO-02 concluded that exposure to surface soil and surface water is not expected to result in unacceptable human health risks. Evaluation of data for subsurface soil, sediment, and groundwater determined that the 95 percent upper confidence limit (UCL) of the mean concentration resulted in a cumulative carcinogenic risk greater than the screening criteria; however, chromium was the main contributor to the carcinogenic risk associated with each media. The analytical data for chromium were for total chromium; however, the RSL used for the screening was for hexavalent chromium, the more toxic (and carcinogenic) form, as compared to trivalent chromium. In the past, prior to including the New Jersey EPA oral cancer slope factor for hexavalent chromium in the table, USEPA's RSL table presented a Residential soil RSL for total chromium assuming a 1 to 6 ratio of hexavalent chromium to trivalent chromium. Assuming this ratio applies to subsurface soil, sediment, and groundwater, exposure to subsurface soil and sediment at Site UXO-02, and groundwater outside of the Site 69 fence was not expected to result in unacceptable human health risks.

The Integrated Exposure Uptake Biokinetic (IEUBK) model was used to determine that lead in groundwater at Site UXO-02 does not pose a health risk under residential use of the site. Since residential exposure scenarios are the most conservative, risks for any other potential receptor (for example, construction workers) would be less than residential risks.

Ecological Risk Screening

Based on the sample analyses for MC and the ERS, no significant risks to populations of ecological receptors exposed to soils, sediment, surface water, or groundwater were identified within Site UXO-02.

TABLE 2-13
Site UXO-02 PA/SI Ecological Risk Screening Summary
Site UXO-02 Expanded SI Report

Media	ERS COPCs	Conclusions
Surface Soil	None	No unacceptable risk from surface soil
Subsurface Soil	None	No unacceptable risk from subsurface soil
Groundwater	None	No unacceptable risk from groundwater
Sediment	None	No unacceptable risk from sediment
Surface Water	None	No unacceptable risk from surface water

Notes:
COPC – contaminant of potential concern
NA – not applicable

PA/SI Recommendations

The PA/SI report recommended additional investigation of groundwater for metals. The need for additional assessment of MC was recommended to be re-evaluated upon completion of the recommended intrusive investigation of geophysical anomalies.

2.4.2 Site 69 Supplemental Investigation

A supplemental investigation of Site 69 was conducted in February and March 2010 to further assess the nature and extent of impacted media (CH2M HILL, 2011a). Surface and subsurface soil, surface water, sediment, and groundwater were sampled to provide sufficient information to select a final remedy for Site 69.

All samples were analyzed for volatile organic compounds (VOCs), semivolatile organic compounds (SVOCs), pesticides, PCBs, and metals. **Figures 2-8** and **2-9** illustrate the frequency and location of exceedances of regulatory standards or screening criteria in surface soils and sediment, respectively. The analytical results for analytes detected in surface soil and sediment are presented in **Appendix A**.

TABLE 2-14
Summary of Site 69 Supplemental Investigation Pesticide Exceedances in Surface Soil
Site UXO-02 Expanded SI Report

Chemical Name	Frequency of Detection (# detected / # analyzed)	Maximum Concentration (mg/kg)	Location of Maximum Concentration	Screening Criteria (mg/kg)		Frequency of Exceedance
alpha-BHC	5 / 11	3.3 J	MR02-IR69-SS01	NC SSL	1.2	4
beta-BHC	1 / 11	2 J	MR02-IR69-SS02	NC SSL	1.2	1
delta-BHC	4 / 11	2.1 J	MR02-IR69-SS02	NC SSL	1.2	1
gamma-BHC	4 / 11	8.4	IR69-SS04	NC SSL	1.8	1
Heptachlor epoxide	1 / 11	1.6 J	MR02-IR69-SS06	NC SSL	0.82	1

Notes:
BHC – benzene hexachloride
J – Analyte present, value may or may not be accurate or precise
mg/kg – milligrams per kilogram
NC SSL – North Carolina Soil Screening Level

TABLE 2-15
Summary of Site 69 Supplemental Investigation Pesticide Exceedances in Sediment
Site UXO-02 Expanded SI Report

Chemical Name	Frequency of Detection (# detected / # analyzed)	Maximum Concentration (mg/kg)	Location of Maximum Concentration	Screening Criteria (mg/kg)		Frequency of Exceedance
beta-BHC	2/3	2.3 J	IR69-SD01	NC SSL	1.2	1
delta-BHC	1/3	6.7 J	IR69-SD01	NC SSL	1.2	1
Dieldrin	2/3	2.7 J	IR69-SD01	NC SSL	0.81	2
gamma-BHC	1/3	2 J	IR69-SD03	NC SSL	1.8	1
Heptachlor epoxide	1/3	3.7 J	IR69-SD01	NC SSL	0.82	1
Monocrotophos*	1/3	420 J	IR69-SD03	NC	NA	NA

Notes:
BHC – benzene hexachloride
J – Analyte present, value may or may not be accurate or precise
mg/kg – milligrams per kilogram
NA – not applicable
NC – no screening criteria established
NC SSL – North Carolina Soil Screening Level
* Monocrotophos included due to a concentration more than two orders of magnitude greater than any other pesticide

A Human Health Risk Assessment (HHRA) and an Ecological Risk Assessment (ERA) were conducted based on the Site 69 Supplemental Investigation results, and the conclusions are summarized in **Tables 2-16** and **2-17**, respectively.

Human health risks are assumed to be present as a result of impacted soils and waste material in the disposal trenches/burial pits at Site 69; however, LUCs prevent current or future exposure to these materials. Samples were not collected from these areas as a result of potential health and safety concerns. Based on current site use and LUCs in place, risks associated with current receptor contact are below or within USEPA target levels. Potential risks associated with future residential and industrial worker ingestion of groundwater were above the USEPA's acceptable risk range and hazard level. The primary COCs contributing to the elevated risk in surficial aquifer groundwater were vinyl chloride, iron, and manganese. However, the Site 69 Supplemental Investigation risk assessment indicated that iron and manganese should not be retained as COPCs for Site 69 groundwater from the surficial aquifer because they are below their respective upper limits that are likely to pose a risk of adverse effects (NAS, 2001), and/or they are within BBG concentration ranges. The primary COCs contributing to elevated risk in the upper Castle Hayne aquifer groundwater were vinyl chloride, chromium, 1,2-DCA, aroclor-1260, and heptachlor epoxide.

Based on the Site 69 ERA, no subsurface soil or surface water analytes are considered to pose a significant risk to lower or upper trophic level receptors. Pesticides in surface soil and sediment were identified as posing a risk to lower trophic level receptors but not to upper trophic level receptors. Pesticides in groundwater, assuming exposure at the groundwater–surface water interface, were identified as posing a risk to lower trophic level receptors. Although upper trophic level receptors were not identified at risk from pesticides, the data set for sediments was limited. Consequently, Step 3b of the ERA (problem formulation development) was recommended to evaluate the distribution of pesticides, the potential for the Site to be the source of pesticides found in the downgradient areas, and their potential toxicity to site receptors.

2.4.3 Site UXO-02 Expanded Site Investigation Work Plan

To further evaluate the potential ecological risk from pesticides identified during the Site 69 ERA, Step 3b was completed during the development of the UXO-02 ESI Work Plan (CH2M HILL, 2011c). The following pesticides were identified as contaminants of potential ecological concern (COPECs) in surface soil and/or sediment: endrin and gamma-BHC in surface soil and dichlorodiphenyldichloroethane (DDD), dichlorodiphenyldichloroethene (DDE), DDT, alpha chlordane, beta-BHC, delta-BHC, dieldrin, endosulfan I, endosulfan sulfate, endrin, gamma-BHC,

gamma chlordane, heptachlor, methoxychlor, and monocrotophos. Additional surface soil and sediment sampling and analysis for pesticides were recommended to support further evaluation of potential ecological risks.

2.5 Regional Climate

The climate in the Onslow County area is characterized by short, mild winters with occasional short-duration cold periods and long, hot summers. Average annual net precipitation is approximately 50 inches. Ambient air temperatures generally range from 33 degrees to 53 degrees Fahrenheit (°F) in the winter months and from 71°F to 88°F during the summer months. Winds are generally south-southwesterly in the summer and north-northwesterly in the winter (Water and Air Research, 1983). The hurricane season begins on June 1 and continues through November 30. Storms of non-tropical origin, such as frontal passages, local thunderstorms, and tornadoes, are more frequent and can occur year-round. Climate at MCIEAST–MCB CAMLEJ is discussed further in Section 1.4 of the MRP Master Project Plans (CH2M HILL, 2008).

2.6 Regional Geology and Hydrogeology

Regional geology and hydrogeology at MCIEAST–MCB CAMLEJ are discussed in Sections 1.6 and 1.7 of the MRP Master Project Plans (CH2M HILL, 2008).

Potable water available to MCIEAST–MCB CAMLEJ and the surrounding residential area is provided by water supply wells that pump groundwater from the Castle Hayne aquifer. Although freshwater is present within the surficial, Castle Hayne, Beaufort and Peedee aquifers, all of which are located below MCIEAST–MCB CAMLEJ, only the Castle Hayne aquifer is used by MCIEAST–MCB CAMLEJ as a water supply source (Cardinell et al., 1993).

No Base water supply wells are located in the Stone Bay area of MCIEAST–MCB CAMLEJ (AHEC, 2002), and the closest active supply well is more than 2 miles away from IR Site 69, across the New River. Offsite water supply for residential/commercial use is provided by the public utility, ONWASA.

Surface water runoff from Site UXO-02 flows into unnamed tributaries and wetlands of the New River. The New River flows into the Atlantic Ocean via New River inlet (MCB Camp Lejeune, 2002).

2.7 Site Geology and Hydrogeology

The intrusive sampling activities conducted during the Site UXO-02 PA/SI ranged from 7.5 feet bgs to a maximum depth of approximately 20 feet bgs. However, previous investigations within IR Site 69 have characterized the geology and hydrogeology to depths of over 200 feet bgs (CH2M HILL, 2011a). Consequently, this section also includes information obtained from IR Site 69.

The uppermost sediments underlying Site UXO-02 consist of laterally discontinuous fine grained sediments consistent with those of the undifferentiated formation (Cardinell et al., 1993). Particle sizes noted from soil boring logs from temporary monitoring well installation activities range from clay and silt to very fine- to fine-grained sand. Predominantly sandy lean clay occurs in the northern portion of the site, grading to silty sand and poorly graded, fine-grained sand, with lesser amounts of clayey sand and sandy silt toward the southern areas of the site.

The underlying Belgrade Formation confining unit consists of silty clays with lesser amounts of sand. The thickness ranges from 12 to 30 feet, thinning toward the east.

The sand and limestone of the Castle Hayne Formation underlies the Belgrade Formation. The Castle Hayne Formation ranges from approximately 30 feet bgs to more than 230 feet bgs, the greatest depth drilled at IR Site 69 (CH2M HILL, 2011a).

Investigation-specific hydrogeologic information was derived from five existing surficial aquifer monitoring wells and five new monitoring wells installed during the ESI. Water level elevations and well construction information are presented in **Table 2-18**.

The potentiometric surface elevations in July 2011 ranged from -0.48 to 29.76 feet amsl **(Table 2-18)**. In addition to seven pre-existing permanent surficial aquifer monitoring wells, 28 temporary monitoring wells screened

within the surficial aquifer were available for water level gauging during the PA/SI. The PA/SI potentiometric surface map developed from this more extensive monitoring well network demonstrated that the configuration of the surficial aquifer water table is strongly influenced by the variable topography of Site UXO-02. Higher water level elevations occurred in upland areas, and lower water level elevations were observed in the valleys. **Figure 2-10** depicts the potentiometric surface of the water table in July 2011, based upon the 10 wells gauged during the ESI, with interpolation influenced by the March 2010 surficial aquifer potentiometric surface map. As observed in March 2010, groundwater flow was generally to the northeast, with diverging flow directions away from Site 69 and converging flow directions toward low lying areas.

The relatively extensive water level elevation data available during the PA/SI provided a sounder basis for calculating hydraulic gradients and seepage velocities than the relatively sparse ESI data set. Horizontal hydraulic gradients in March 2010 ranged from 0.0349 foot per foot (ft/ft) in the central portion of the site to 0.255 ft/ft in the vicinity of the bluffs overlooking the New River, and corresponding average linear seepage velocities ranged from 0.066 to 0.483 foot per day (CH2M HILL, 2012).

TABLE 2-18
Groundwater Elevation and Well Construction Information
Site UXO-02 Expanded SI Report

Well ID	Date Installed	Screened Interval (feet bgs)	Well Depth (feet bgs)	TOC Elevation (feet amsl)	Depth to Groundwater (feet bTOC)	Groundwater Elevation (feet amsl)
MR02-MW01	7/20/2011	15-25	25	13.62	14.1	-0.48
MR02-MW02	7/19/2011	19-29	29	18.05	17.6	0.45
MR02-MW03	7/20/2011	20-30	30	24.69	19.4	5.29
MR02-MW04	7/20/2011	5-15	15	31.73	8.29	23.44
MR02-MW05	7/20/2011	11-21	21	12.11	11.96	0.15
MR02-IR69-MW09	1/8/1994	10-20	20	11.11	11.14	-0.03
MR02-IR69-MW11	1/7/1994	8.5-18.5	18.5	27.43	10.1	17.33
MR02-IR69-MW12	1/6/1994	2.5-12.5	12.5	9.74	5.7	4.04
MR02-IR69-MW13	5/24/1994	3-13	13	36.87	7.11	29.76
MR02-IR69-MW14	12/17/1994	3-13	13	33.73	7.75	25.98

Notes:
Water levels gauged on July 25, 2011
amsl – above mean sea level
bgs – below ground surface
bTOC – below top-of-casing
ID – identification

TABLE 2-1

Summary of Site UXO-02 PA/SI Metals Exceedances in Surface Soil

Site UXO-02 Expanded SI Report

Chemical Name	Frequency of Detection (# detected / # analyzed)	Minimum Concentration (mg/kg)	Maximum Concentration (mg/kg)	Location of Maximum Concentration	Screening Criteria (mg/kg)		Frequency of Exceedances
Aluminum	202 / 202	212 J	13,600	MR02-SS12	2X Mean BBG	5,487	44
					Residential RSL	7,700	21
Antimony	14 / 202	0.1J	3.2 J	MR02-SS121	2X Mean BBG	0.447	1
					Residential RSL	3.1	1
Arsenic	165 / 202	0.16J	8.3J	MR02-SS24	NCSSL	5.8	1
					2X Mean BBG	0.626	68
					Residential RSL	0.39	105
					Industrial RSL	1.6	3
Barium	154 / 202	1.7J	93.2	MR02-SS05	2X Mean BBG	14.5	61
Beryllium	45 / 202	0.01 J	0.51J	MR02-SS05 MR02-SS07	2X Mean BBG	0.103	15
Cadmium	36 / 202	0.01 J	0.13 J	MR02-SS176	2X Mean BBG	0.033	6
Chromium	142 / 202	0.34 J	12.9	MR02-SS24	NCSSL	3.8	41
					2X Mean BBG	6.05	15
					Residential RSL	0.29	142
					Industrial RSL	5.6	19
Cobalt	139 / 202	0.03 J	2 J	MR02-SS92	2X Mean BBG	0.294	48
Copper	4 / 202	4.8	7.8	MR02-SS183	2X Mean BBG	4.83	3
Iron	202 / 202	141	20,800	MR02-SS24	NCSSL	150	201
					2X Mean BBG	3,245	13
					Residential RSL	5,500	4
Lead	202 / 202	2.2	27.6	MR02-SS171	2X Mean BBG	12.3	17
Manganese	202 / 202	4.9	594	MR02-SS149	NCSSL	65	33
					2X Mean BBG	13.7	170
					Residential RSL	180	4
Mercury	176 / 202	0.01 J	0.14 J	MR02-SS171	2X Mean BBG	0.081	6
Nickel	85 / 202	0.19J	9.3	MR02-SS24	2X Mean BBG	1.21	24
Potassium	25 / 202	32.3J	479 J	MR02-SS01	2X Mean BBG	116	20
Selenium	117 / 202	0.1 J	0.57 J	MR02-SS12	2X Mean BBG	0.563	1
Sodium	20 / 202	6.6 J	168 J	MR02-SS81D	2X Mean BBG	80.9	7
Vanadium	154 / 202	0.48 J	18.1	MR02-SS07	2X Mean BBG	8.9	13
Zinc	150 / 202	1.4 J	53.3	MR02-SS14	2X Mean BBG	10.8	40

Notes:
mg/kg = Milligramgs per kilogram
J = Analyte present, value may or may not be accurate or precise
BBG= Base Background
RSL= United States Environmental Protection Agency Adjusted Regional Screening Level
NCSSL= North Carolina Soil Screening Level

Prepared by: Betsy Reid Checked by: Verd Anna Cunningham

TABLE 2-2

Summary of Site UXO-02 PA/SI Metals Exceedances in Site 69 Surface Soil

Site UXO-02 Expanded SI Report

Chemical Name	Frequency of Detection (# detected / # analyzed)	Minimum Concentration (mg/kg)	Maximum Concentration (mg/kg)	Location of Maximum Concentration	Screening Criteria (mg/kg)		Frequency of Exceedances
Arsenic	24 / 24	0.24 J	1.6	MR02-IR69-SS15	2x mean BBG Residential RSL	0.626 0.39	2 20
Barium	8 / 24	5 J	30.8 J	MR02-IR69-SS01	2x mean BBG	14.5	3
Calcium	1 / 24	39,700	39,700	MR02-IR69-SS15	2x mean BBG	6,360	1
Chromium	19 / 24	0.99 J	12	MR02-IR69-SS15	NCSSL 2x mean BBG Residential RSL Industrial RSL	3.8 6.05 0.29 5.6	2 1 19 1
Copper	9 / 24	1.2 J	5.6 J	MR02-IR69-SS15	2x mean BBG	4.83	1
Iron	24 / 24	469	4,530	MR02-IR69-SS15	NCSSL 2x mean BBG	150 3,245	24 1
Lead	24 / 24	2.2	221	MR02-IR69-SS17	2x mean BBG	12.3	1
Manganese	24 / 24	5.9	141	MR02-IR69-SS15	NCSSL 2x mean BBG	65 13.7	1 15
Potassium	24 / 24	43 J	591 J	MR02-IR69-SS15	2x mean BBG	116	8
Vanadium	9 / 24	2.1 J	16.9	MR02-IR69-SS15	2x mean BBG	8.9	1
Zinc	12 / 24	4.3	31.2	MR02-IR69-SS12	2x mean BBG	10.8	5

Notes:

mg/kg = Milligramgs per kilogram

J = Analyte present, value may or may not be accurate or precise

BBG= Base Background

RSL= United States Environmental Protection Agency Adjusted Regional Screening Level

NCSSL= North Carolina Soil Screening Level

Prepared by: Betsy Reid Checked by: Verd Anna Cunningham

TABLE 2-3

Summary of Site UXO-02 PA/SI Metals Exceedances in Subsurface Soil

Site UXO-02 Expanded SI Report

Chemical Name	Frequency of Detection (# detected / # analyzed)	Minimum Concentration (mg/kg)	Maximum Concentration (mg/kg)	Location of Maximum Concentration	Screening Criteria (mg/kg)		Frequency of Exceedances
Aluminum	30 / 30	39.3	2400	MR02-IS02-5-6	2X Mean BBG Residential RSL	10,369 7,700	10 11
Arsenic	18 / 30	0.12 J	5.5	MR02-IS02-5-6 MR02-IS17-5-6	2X Mean BBG Industrial RSL Residential RSL	2.12 1.6 0.39	7 9 12
Barium	25 / 30	1.4 J	30.2 J	MR02-IS08-4-5	2X Mean BBG	16.6	9
Cadmium	1 / 30	0.08 J	0.08 J	MR02-IS17-5-6	2X Mean BBG	0.023	1
Chromium	21 / 30	2	35	MR02-IS17-5-6	2X Mean BBG NC SSL Industrial RSL Residential RSL	14.5 3.8 5.6 0.29	8 14 12 21
Cobalt	11 / 30	0.04 J	1.3 J	MR02-IS17-5-6	2X Mean BBG	0.822	1
Copper	2 / 30	5.7	6.3	MR02-IS17-5-6	2X Mean BBG	2.56	2
Iron	30 / 30	51.7	17,900 J	MR02-IS17-5-6	2X Mean BBG NC SSL Residential RSL	5,439 150 5,500	9 29 8
Lead	30 / 30	0.3 J	9.6	MR02-IS17-5-6	2X Mean BBG	8.49	1
Magnesium	4 / 30	940 J	1,330 J	MR02-IS01-6-7	2X Mean BBG	363	4
Manganese	29 /30	2.4 J	29	MR02-IS21D-5-6	2X Mean BBG	9.25	13
Nickel	11 / 30	0.11 J	4 J	MR02-IS17-5-6	2X Mean BBG	2.27	2
Potassium	18 / 30	38.7 J	1,610 J	MR02-IS17-5-6	2X Mean BBG	361	9
Selenium	21 / 30	0.05 J	0.55 J	MR02-IS17-5-6	2X Mean BBG	0.505	2
Vanadium	14 / 30	0.21 J	46.4	MR02-IS17-5-6	2X Mean BBG Residential RSL	17.2 39	9 1
Zinc	10 / 30	3.7	23.6	MR02-IS17-5-6	2X Mean BBG	6.59	9

Notes:

mg/kg = Milligramgs per kilogram

J = Analyte present, value may or may not be accurate or precise

BBG= Base Background

RSL= United States Environmental Protection Agency Adjusted Regional Screening Level

NCSSL= North Carolina Soil Screening Level

Prepared by: Verd Anna Cunningham Checked by: Rachel Zajac

TABLE 2-4

Summary of Site UXO-02 PA/SI Metals Exceedances in Site 69 Subsurface Soil

Site UXO-02 Expanded SI Report

Chemical Name	Frequency of Detection (# detected / # analyzed)	Minimum Concentration (mg/kg)	Maximum Concentration (mg/kg)	Location of Maximum Concentration	Screening Criteria (mg/kg)		Frequency of Exceedances
Arsenic	4 / 4	0.21 J	0.91	MR02-IR69-IS03-7_5-9_5	Residential RSL	0.39	3
Chromium	3 / 4	6.3	6.6	MR02-IR69-IS01D-5-6	NC SSL	3.8	3
					Industrial RSL	5.6	3
					Residential RSL	0.29	3
Iron	4 / 4	645	2,470	MR02-IR69-IS03-7_5-9_5	NC SSL	150	4
Manganese	4 / 4	5.6	12.9	MR02-IR69-IS01D-5-6	2X Mean BBG	9.25	3
Zinc	2 / 4	1.2 J	16.8	MR02-IR69-IS03-7_5-9_5	2X Mean BBG	6.59	1

Notes:

mg/kg = Milligramgs per kilogram

J = Analyte present, value may or may not be accurate or precise

BBG= Base Background

RSL= United States Environmental Protection Agency Adjusted Regional Screening Level

NCSSL= North Carolina Soil Screening Level

Prepared by: Verd Anna Cunningham Checked by: Rachel Zajac

TABLE 2-5

Summary of Site UXO-02 PA/SI Total Metals Exceedances in Temporary Groundwater Monitoring Wells

Site UXO-02 Expanded SI Report

Chemical Name	Frequency of Detection (# detections / # analyzed)	Minimum Concentration (µg/L)	Maximum Concentration (µg/L)	Location of Maximum Concentration	Screening Criteria (µg/L)		Frequency of Exceedances
Aluminum	30 / 31	64.6 J	55,400 J	MR02-TW17	2X Mean BBG	1,886	14
					Tap Water RSL	3,700	12
Antimony	2 / 31	2 J	7 J	MR02-TW08	2X Mean BBG	3.28	1
					Tap Water RSL	1.5	2
					NCGWQS	6	1
Arsenic	6 / 31	2 J	9.3 J	MR02-TW12	2X Mean BBG	5.8	2
					Tap Water RSL	0.045	6
Barium	29 / 31	8.5 J	214	MR02-TW06	2X Mean BBG	86.2	4
Chromium	7 / 31	10.6	56.8	MR02-TW17	2X Mean BBG	3.13	7
					Tap Water RSL	0.043	7
					NCGWQS	10	7
Cobalt	8 / 31	0.87 J	10 J	MR02-TW12	2X Mean BBG	3.4	1
					Tap Water RSL	1.1	7
Copper	3 / 31	26.2	48.4	MR02-TW06	2X Mean BBG	2.76	3
Iron	30 / 31	113 J	20,700	MR02-TW12	2X Mean BBG	5,999	5
					Tap Water RSL	2,600	9
					NCGWQS	300	28
Lead	20 / 31	0.81 J	24.1	MR02-TW06	2X Mean BBG	2.8	12
					Tap Water RSL	15	3
					NCGWQS	15	3
Magnesium	2 / 31	7,650	8,410 J	MR02-TW09	2X Mean BBG	6,363	2
Manganese	26 / 31	17.1	245	MR02-TW12	2X Mean BBG	214	1
					Tap Water RSL	88	6
					NCGWQS	50	14
Nickel	30 / 31	0.46 J	24.5 J	MR02-TW25	2X Mean BBG	7.97	8
Potassium	31 / 31	280 J	9,040	MR02-TW08	2X Mean BBG	3,277	3
Sodium	28 / 31	5,300	75,000	MR02-TW09	2X Mean BBG	22,508	6
Vanadium	24 / 31	0.5 J	54.5	MR02-TW17	2X Mean BBG	5	9
					Tap Water RSL	18	4
Zinc	15 / 31	27.7	424	MR02-TW16	2X Mean BBG	42.1	11

Notes:
µg/L = Micrograms per liter
J = Analyte present, value may or may not be accurate or precise
BBG= Base Background
RSL= United States Environmental Protection Agency Adjusted Regional Screening Level
NCGWQS= North Carolina Groundwater Quality Standards

Prepared by: Verd Anna Cunningham Checked by: Rachel Zajac

TABLE 2-6

Summary of Site UXO-02 PA/SI Total Metals Exceedances in in Permanent Groundwater Monitoring Wells

Site UXO-02 Expanded SI Report

Chemical Name	Frequency of Detection (# detections / # analyzed)	Minimum Concentration (µg/L)	Maximum Concentration (µg/L)	Location of Maximum Concentration	Screening Criteria (µg/L)		Frequency of Exceedances
Arsenic	2 / 8	2.4 J	5.6 J	MR02-IR69-MW15	Tap Water RSL	0.045	2
Chromium	5 / 8	0.62 J	1.9 J	MR02-IR69-MW09	Tap Water RSL	0.043	5
Cobalt	4 / 8	0.29 J	2 J	MR02-IR69-MW09	Tap Water RSL	1.1	1
Copper	1 / 8	5.7 J	5.7 J	MR02-IR69-MW09	2X Mean BBG	2.76	1
Iron	8 / 8	86.6 J	30,800	MR02-IR69-MW15	2X Mean BBG Tap Water RSL NCGWQS	5,999 2,600 300	1 2 4
Manganese	8 / 8	5 J	802	MR02-IR69-MW15	2X Mean BBG Tap Water RSL NCGWQS	214 88 50	1 1 1
Sodium	6 / 8	6,360	24,100	MR02-IR69-MW15	2X Mean BBG	22,508	1
Zinc	1 / 8	63.5	63.5	MR02-IR69-MW12	2X Mean BBG	42.1	1

Notes:

µg/L = Micrograms per liter

J = Analyte present, value may or may not be accurate or precise

BBG= Base Background

RSL= United States Environmental Protection Agency Adjusted Regional Screening Level

NCGWQS= North Carolina Groundwater Quality Standards

Prepared by: Verd Anna Cunningham Checked by: Rachel Zajac

TABLE 2-7

Summary of Site UXO-02 PA/SI Dissolved Metals Exceedances in Temporary Groundwater Monitoring Wells

Site UXO-02 Expanded SI Report

Chemical Name	Frequency of Detection (# detections / # analyzed)	Minimum Concentration (µg/L)	Maximum Concentration (µg/L)	Location of Maximum Concentration	Screening Criteria (µg/L)		Frequency of Exceedances
Aluminum	13 / 13	19 J	1,960	MR02-TW10	2X Mean BBG	1,886	1
Antimony	1 / 13	1.9 J	1.9 J	MR02-TW29	Tap Water RSL	1.5	1
Arsenic	1 / 13	4 J	4 J	MR02-TW12	Tap Water RSL	0.045	1
Cobalt	5 / 13	0.85 J	8.6 J	MR02-TW12	2X Mean BBG Tap Water RSL	3.4 1.1	1 1
Iron	11 / 13	34.2 J	11,400	MR02-TW12	2X Mean BBG Tap Water RSL NCGWQS	5,999 2,600 300	1 2 9
Lead	4 / 13	0.8 J	3.4	MR02-TW22	2X Mean BBG	2.8	1
Magnesium	1 / 13	7,190	7,190	MR02-TW12	2X Mean BBG	6,363	1
Manganese	9 / 13	15.7	209	MR02-TW12	Tap Water RSL NCGWQS	88 50	3 7
Nickel	13 / 13	1.1 J	26.8 J	MR02-TW25	2X Mean BBG	7.97	4
Potassium	13 / 13	428 J	7,390	MR02-TW08	2X Mean BBG	3,277	1
Selenium	8 / 13	0.64	5 J	MR02-TW26	2X Mean BBG	3.14	1
Sodium	12 / 13	5,560	39,400	MR02-TW12	2X Mean BBG	22,508	2
Vanadium	4 / 13	0.95 J	6.4 J	MR02-TW12	2X Mean BBG	4.72	2
Zinc	9 / 13	22.9	332	MR02-TW25	2X Mean BBG	42.1	6

Notes:

µg/L = Micrograms per liter

J = Analyte present, value may or may not be accurate or precise

BBG= Base Background

RSL= United States Environmental Protection Agency Adjusted Regional Screening Level

NCGWQS= North Carolina Groundwater Quality Standards

Prepared by: Verd Anna Cunningham Checked by: Rachel Zajac

TABLE 2-8

Summary of Site UXO-02 PA/SI Dissolved Metals Exceedances in Permanent Groundwater Monitoring Wells

Site UXO-02 Expanded SI Report

Chemical Name	Frequency of Detection (# detections / # analyzed)	Minimum Concentration (µg/L)	Maximum Concentration (µg/L)	Location of Maximum Concentration	Screening Criteria (µg/L)		Frequency of Exceedances
Chromium	5 / 8	0.44 J	1.4 J	MR02-IR69-MW15	Tap Water RSL	0.043	5
Cobalt	2 / 8	0.55 J	1.6 J	MR02-IR69-MW09	Tap Water RSL	1.1	1
Iron	5 / 8	38.4 J	27,800	MR02-IR69-MW15	2X Mean BBG Tap Water RSL NCGWQS	5,999 2,600 300	1 2 3
Manganese	8 / 8	4.4 J	763	MR02-IR69-MW15	2X Mean BBG Tap Water RSL NCGWQS	214 88 50	1 1 1
Sodium	6 / 8	6,380	23,000	MR02-IR69-MW15	2X Mean BBG	22,508	1
Zinc	4 / 8	4.9 J	87.5	MR02-IR69-MW12	2X Mean BBG	42.1	1

Notes:

µg/L = Micrograms per liter

J = Analyte present, value may or may not be accurate or precise

BBG= Base Background

RSL= United States Environmental Protection Agency Adjusted Regional Screening Level

NCGWQS= North Carolina Groundwater Quality Standards

Prepared by: Verd Anna Cunningham Checked by: Rachel Zajac

TABLE 2-12

Site UXO-02 PA/SI Human Health Risk Screening Summary

Site UXO-2 Expanded SI Report

Media	Step 1 COPCs	Step 2 COPCs	Step 3 COPCs	Conclusion
Surface Soil	Nitroglycerin Aluminum Antimony Arsenic Chromium Iron Manganese	Arsenic Chromium	None	No unacceptable risk expected from exposure to surface soil.
Subsurface Soil	Aluminum Arsenic Chromium Iron Vanadium	Arsenic Chromium	Arsenic Chromium	Potential unacceptable risk from exposure to subsurface soil, associated with chromium based on use of hexavalent chromium screening values.
Sediment	Aluminum Arsenic Chromium Iron Vanadium	Arsenic Chromium	Arsenic Chromium	Potential unacceptable risk from exposure to sediment, associated with chromium based on use of hexavalent chromium screening values .
Surface Water	Arsenic Iron Manganese	Arsenic	None	No unacceptable risk expected from exposure to surface water.
Groundwater	Aluminum Antimony Arsenic Chromium Cobalt Iron Lead Manganese Vanadium	Aluminum Antimony Arsenic Chromium Cobalt Iron Manganese Vanadium	Aluminum Antimony Arsenic Chromium Iron Manganese Vanadium	Potential unacceptable risk from exposure to groundwater, associated with metals.

Notes:
COPC = chemical of potential concern

TABLE 2-16

Site 69 Supplemental Investigation Human Health Risk Screening Summary for Surface Soil and Sediment

Site UXO-02 Expanded SI Report

Media	COPCs	COCs	Conclusion
Surface Soil	Arsenic Chromium Manganese	None	No unacceptable risk expected from exposure to surface soil.
Combined Surface and Subsurface Soil	Aluminum Arsenic Chromium Iron Manganese Vanadium	None	No unacceptable risk expected from exposure to combined surface soil and subsurface soil.
Sediment	Benzo(a)anthracene Benzo(a)pyrene Benzo(b)fluoranthene Benzo(k)fluoranthene Chrysene Indeno(1,2,3-cd)pyrene Aluminum Antimony Chromium	None	No unacceptable risk expected from exposure to sediment.
Surface Water	Iron Thallium	None	No unacceptable risk expected from exposure to surface water.
Surficial Aquifer Groundwater	1,1,2,2-Tetrachloroethane 1,1,2-Trichloroethane 1,2-Dichloroethane 1,3-Dichlorobenzene 1,4-Dichlorobenzene Benzene Chloroform cis-1,2-Dichloroethene Tetrachloroethene trans-1,2-Dichloroethene Trichloroethene Vinyl chloride alpha-BHC Aroclor-1260 beta-BHC delta-BHC Heptachlor epoxide Iron Manganese Vanadium Zinc	1,1,2,2-Tetrachloroethane 1,1,2-Trichloroethane 1,2-Dichloroethane cis-1,2-Dichloroethene Tetrachloroethene Vinyl chloride Heptachlor epoxide alpha-BHC Aroclor-1260 beta-BHC Heptachlor epoxide Iron Manganese Vanadium Zinc	Unacceptable risk associated with potable use of Surficial Aquifer Groundwater.
Castle-Hayne Aquifer	1,2,4-Trichlorobenzene 1,2-Dichloroethane 1,3-Dichlorobenzene 1,4-Dichlorobenzene Benzene Chloroform cis-1,2-Dichloroethene trans-1,2-Dichloroethene Trichloroethene Vinyl chloride Aroclor-1260 Dieldrin Heptachlor epoxide Chromium Iron Thallium	1,2,4-Trichlorobenzene 1,2-Dichloroethane Benzene Chloroform cis-1,2-Dichloroethene trans-1,2-Dichloroethene Trichloroethene Vinyl chloride Aroclor-1260 Dieldrin Heptachlor epoxide Chromium Iron Thallium	Unacceptable risk associated with potable use of Castle-Hayne Groundwater.

Notes:

COPC = chemical of potential concern; chemical with maximium detected concentration exceeds risk-based screening level.

COC = chemical of concern; chemical that contributed a noncarcinongeic hazard above 0.1 to total cumulative receptor noncarcinogenic hazard greater than 1 or carcinogenic risk greater than 10^{-6} to total cumulative receptor carcinogenic risk greater than 10^{-4}.

TABLE 2-17

Site 69 Supplemental Investigation Ecological Risk Assessment Summary for Surface Soil and Sediment

Site UXO-02 Expanded SI Report

Media	Ecological Risk Assessment COPCs	Conclusions
Surface Soil	Endrin, gamma-BHC	Potential unacceptable risk to lower trophic level receptors.
Subsurface Soil	None	No unacceptable risk from subsurface soil
Sediment	4,4'-DDD, 4,4'-DDE, 4,4'-DDT, alpha-chlordane, dieldrin, endosulfan I, endosulfan sulfate, endrin, gamma-BHC (lindane), heptachlor, and methoxychlor	Potential unacceptable risk to lower trophic level receptors.
Groundwater	4,4'-DDD, 4,4'-DDE, 4,4'-DDT, alpha-chlordane, dieldrin, endosulfan I, endosulfan sulfate, endrin, gamma-BHC (lindane), heptachlor, and methoxychlor	Potential unacceptable risk to lower trophic level receptors, assuming exposure at the groundwater-surface water interface.
Surface Water	None	No unacceptable risk from surface water

Notes
COPC - Contaminant of Potential Concern

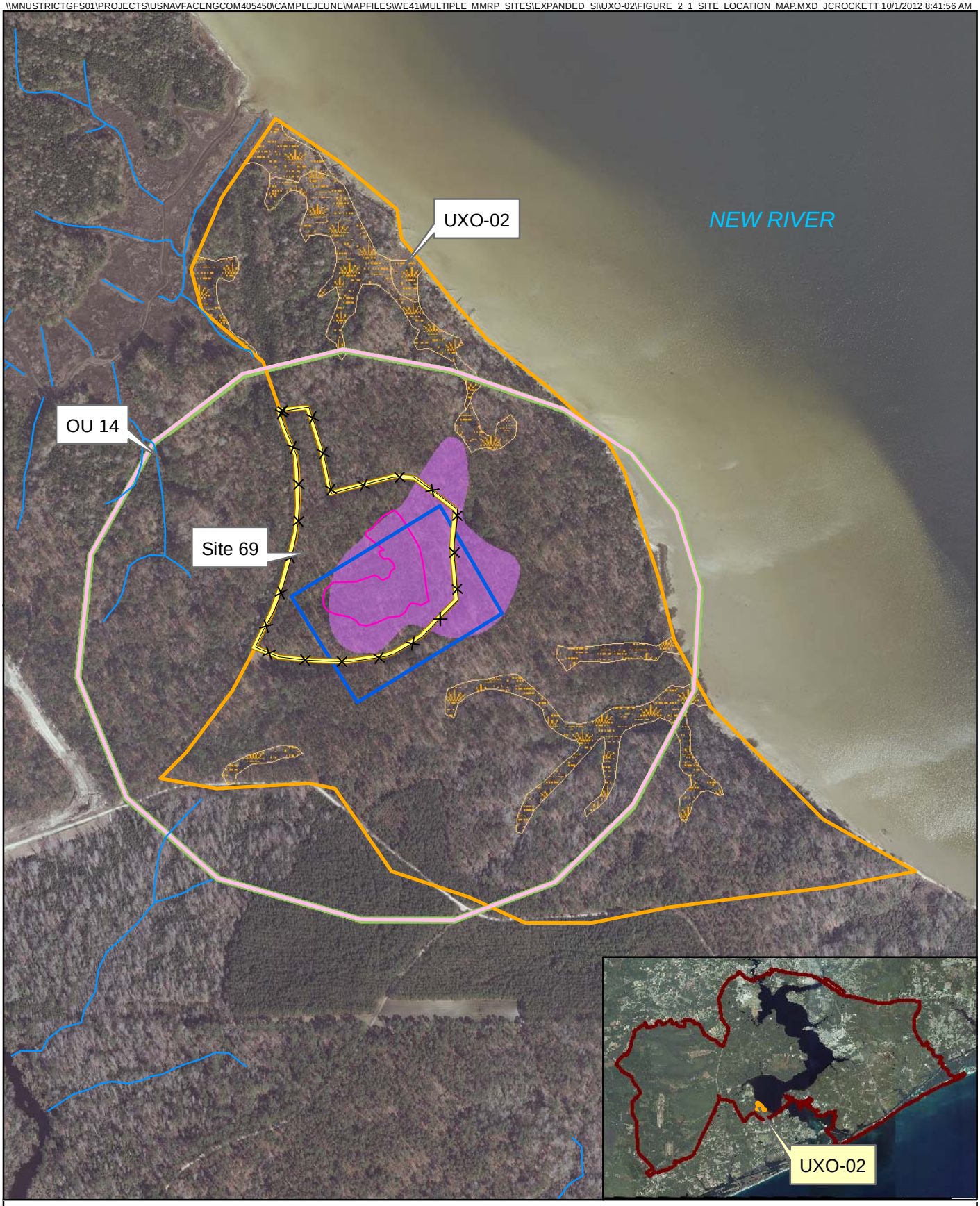

Legend

- Fence Line
- Streams
- Site 69 Boundary
- Site UXO-02 Boundary
- Operable Unit No. 14
- Aquifer Use Control Boundary
- Intrusive Activities Control Boundary (Soil)
- Intrusive Activities Control Boundary (Groundwater)
- Planning Wetlands at UXO-02
- Groundwater Plume
- Waste Disposal Area

N

0 300 600 Feet

1 inch = 600 feet

Figure 2-1
Site Location
Site UXO-02 Expanded SI Report
MCIEAST-MCB CAMLEJ
North Carolina

CH2MHILL

DVR \\MNUSTRICTGFS01\PROJECTS\USNAVFACENGCOM405450\CAMPLEJEUNE\MAPFILES\WE41\MULTIPLE_MMRP_SITES\EXPANDED_SI\UXO-02\FIGURE_2_2_DIGITAL_GEOPHYSICAL_MAPPING_RESULTS_UXO_02.MXD JCROCKETT 10/1/2012 8:49:21 AM

Legend

- Geophysical Anomaly (greater than 3 mV)(EM61-MK2)
- DGM Transect
- Site UXO-02 Investigation Areas
- Jurisdictional Wetlands
- Site UXO-02 Boundary
- Site 69 Boundary

N

0 175 350 700 Feet

1 inch = 350 feet

Figure 2-2
Site UXO-02 PA/SI Digital Geophysical Mapping Results
Site UXO-02 Expanded SI Report
MCIEAST-MCB CAMLEJ
North Carolina

CH2MHILL

DVR \\MNUSTRICTGFS01\PROJECTS\USNAVFACENGCOM405450\CAMPLEJEUNE\MAPFILES\WE41\MULTIPLE_MMRP_SITES\EXPANDED_SI\UXO-02\FIGURE_2_3_SURFACE_SOIL_METALS_EXCEEDANCES.MXD JCROCKETT 10/1/2012 8:56:51 AM

Legend

- Site UXO-02
- Site 69

Exceedances

- 2X Mean BBG + NCSSL
- 2X Mean BBG + Adjusted Industrial Soil RSL
- 2X Mean BBG + Adjusted Residential Soil RSL

N

0 175 350 700 Feet

1 inch = 350 feet

Figure 2-3
Site UXO-02 PA/SI Metal Exceedances in Surface Soil
Site UXO-02 Expanded SI Report
MCIEAST-MCB CAMLEJ
North Carolina

CH2MHILL

Aerial Photography date 2009

Generated By: *Verd Anna Cunningham/RDU* Checked by: *Kristin Rogers/RDU*

DVR \\MNUSTRICTGFS01\PROJECTS\USNAVFACENGCOM405450\CAMPLEJEUNE\MAPFILES\WE41\MULTIPLE_MMRP_SITES\EXPANDED_SI\UXO-02\FIGURE_2_4_SUBSURFACE_SOIL_METALS_EXCEEDANCES.MXD JCROCKETT 10/1/2012 8:58:06 AM

Legend

- Site UXO-02
- Site 69

Metal Exceedances

- 2X Mean BBG + NCSSL
- 2X Mean BBG + Adjusted Industrial Soil RSL
- 2X Mean BBG + Adjusted Residential Soil RSL

Aerial Photography date 2009

N

0 175 350 700 Feet

1 inch = 350 feet

Figure 2-4
Site UXO-02 PA/SI Metal Exceedances in Subsurface Soil
Site UXO-02 Expanded SI Report
MCIEAST-MCB CAMLEJ
North Carolina

CH2MHILL

Generated By: *Verd Anna Cunningham/RDU* Checked by: *Kristin Rogers/RDU*

DVR \\MNUSTRICTGFS01\PROJECTS\USNAVFACENGCOM405450\CAMPLEJEUNE\MAPFILES\WE41\MULTIPLE_MMRP_SITES\EXPANDED_SI\UXO-02\FIGURE_2_5_GROUNDWATER_METALS_EXCEEDANCES.MXD JCROCKETT 10/1/2012 8:58:53 AM

Legend

Site UXO-02

Site 69

Exceedances

2X Mean BBG + NCGWQS

2X Mean BBG + Adjusted Tap Water RSL

N

0 175 350 700 Feet

1 inch = 350 feet

Figure 2-5
Site UXO-02 PA/SI Metal Exceedances in Groundwater
Site UXO-02 Expanded SI Report
MCIEAST-MCB CAMLEJ
North Carolina

CH2MHILL

Aerial Photography date 2009

Generated By: *Verd Anna Cunningham/RDU* Checked by: *Kristin Rogers/RDU*

DVR \\MNUSTRICTGFS01\PROJECTS\USNAVFACENGCOM405450\CAMPLEJEUNE\MAPFILES\WE41\MULTIPLE_MMRP_SITES\EXPANDED_SI\UXO-02\FIGURE_2_6_SURFACE_WATER_METALS_EXCEEDANCES.MXD JCROCKETT 10/1/2012 8:59:53 AM

Legend

- Site UXO-02
- Site 69

Exceedances

- NRWQC
- Adjusted Tap Water RSLs

Aerial Photography date 2009

N

0 175 350 700 Feet

1 inch = 350 feet

Figure 2-6
Site UXO-02 PA/SI Metal Exceedances in Surface Water
Site UXO-02 Espanded SI Report
MCIEAST-MCB CAMLEJ
North Carolina

CH2MHILL

Generated By: *Verd Anna Cunningham/RDU* Checked by: *Kristin Rogers/RDU*

DVR \\MNUSTRICTGFS01\PROJECTS\USNAVFACENGCOM405450\CAMPLEJEUNE\MAPFILES\WE41\MULTIPLE_MMRP_SITES\EXPANDED_SI\UXO-02\FIGURE_2_7_SEDIMENT_METALS_EXCEEDANCES.MXD JCROCKETT 10/1/2012 10:35:14 AM

Legend

Site UXO-02

Site 69

Exceedances

Adjusted Industrial Soil RSL

Adjusted Residential Soil RSL

N

0 175 350 700 Feet

1 inch = 350 feet

Figure 2-7
Site UXO-02 PA/SI Metal Exceedances in Sediment
Site UXO-02 Expanded SI Report
MCIEAST-MCB CAMLEJj
North Carolina

CH2MHILL

Aerial Photography date 2009

Generated By:*Verd Anna Cunningham/RDU* Checked by: *Kristin Rogers/RDU*

DVR: \\MNUSTRICTGES01\PROJECTS\USNAVFACENGCOM405450\CAMPLEJEUNE\MAPFILES\WE41\MULTIPLE_MMRP_SITES\EXPANDED_SI\UXO-02\FIGURE_2_8_SITE_69_SUPPLEMENTAL_INVESTIGATION_EXCEEDANCES_2011.MXD JCBOCKETT 10/1/2012 10:36:35 AM

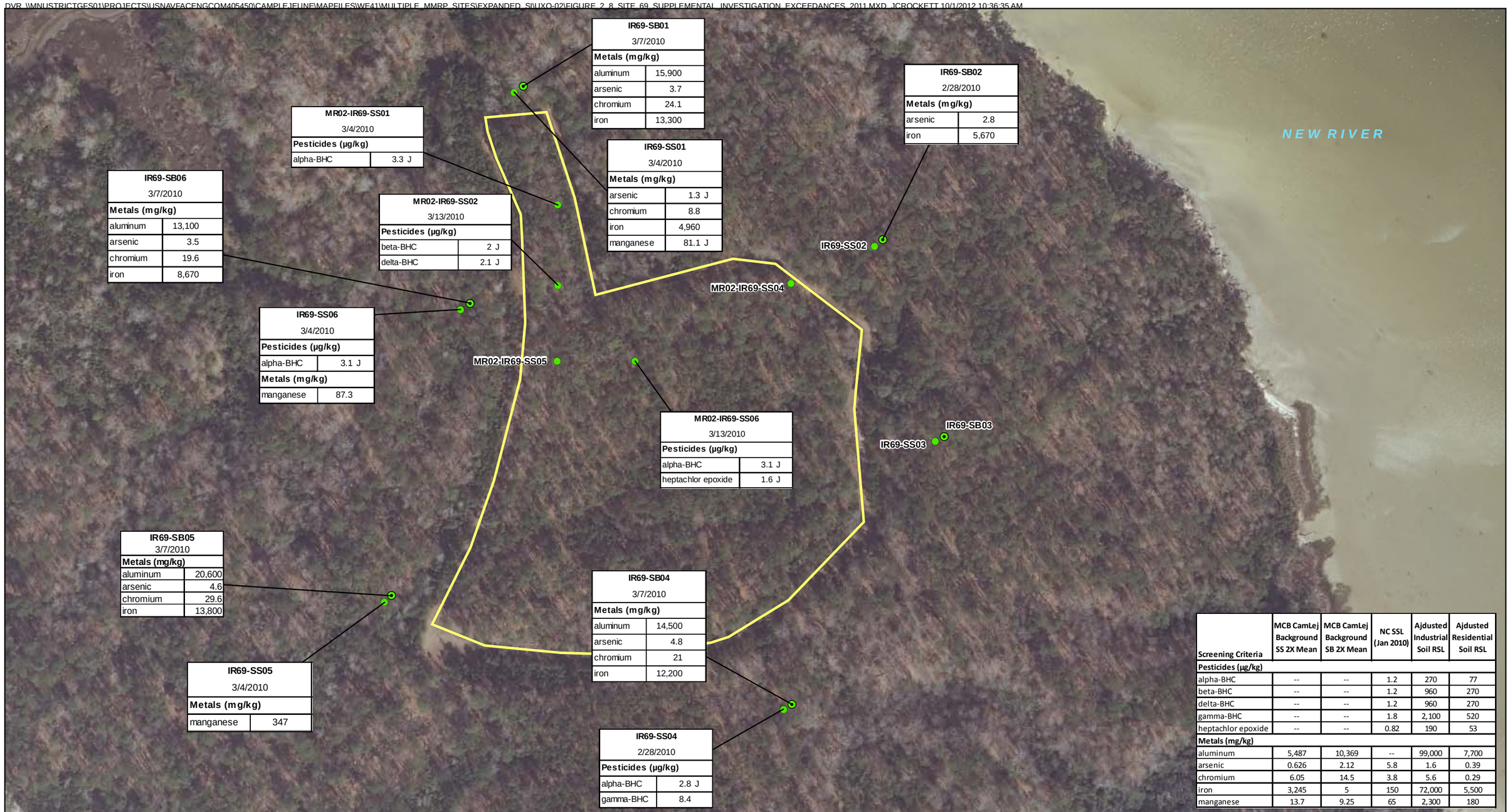

Screening Criteria	MCB CamLej Background SS 2X Mean	MCB CamLej Background SB 2X Mean	NC SSL (Jan 2010)	Ajdusted Industrial Soil RSL	Ajdusted Residential Soil RSL
Pesticides (µg/kg)					
alpha-BHC	--	--	1.2	270	77
beta-BHC	--	--	1.2	960	270
delta-BHC	--	--	1.2	960	270
gamma-BHC	--	--	1.8	2,100	520
heptachlor epoxide	--	--	0.82	190	53
Metals (mg/kg)					
aluminum	5,487	10,369	--	99,000	7,700
arsenic	0.626	2.12	5.8	1.6	0.39
chromium	6.05	14.5	3.8	5.6	0.29
iron	3,245	5	150	72,000	5,500
manganese	13.7	9.25	65	2,300	180

Legend
- Surface Soil Sampling Locations
- Subsurface Soil Sampling Locations
- Site 69

Notes:
J- Analyte present, value may or may not be accurate or precise
mg/kg - milligrams per kilogram
µg/kg -micrograms per kilogram
NC SSLs - NC Department of Environment and Natural Resources' Federal Remediation Branch Soil Screening Levels
RSLs - USEPA Regional Screening Levels
SS - Surface Soil
SB - Subsurface Soil

N

0 100 200 400 Feet

1 inch = 200 feet

Figure 2-8
Site 69 Supplemental Investigation Exceedances in Soil
Site UXO-02 Expanded SI Report
MCIEAST-MCB CAMLEJ
North Carolina

CH2MHILL

Generated By: *K. Rogers/RDU* Checked by: *T. Grim/CLT*

DVR: \\MNUSTRICTGFS01\PROJECTS\USNAVFACENGCOM405450\CAMPLEJEUNE\MAPFILES\WE41\MULTIPLE_MMRP_SITES\EXPANDED_SI\UXO-02\FIGURE_2_9_SITE_69_SUPPLEMENTAL_INVESTIGATION_EXCEEDENCES_SD.MXD JCROCKETT 10/1/2012 10:37:12 AM

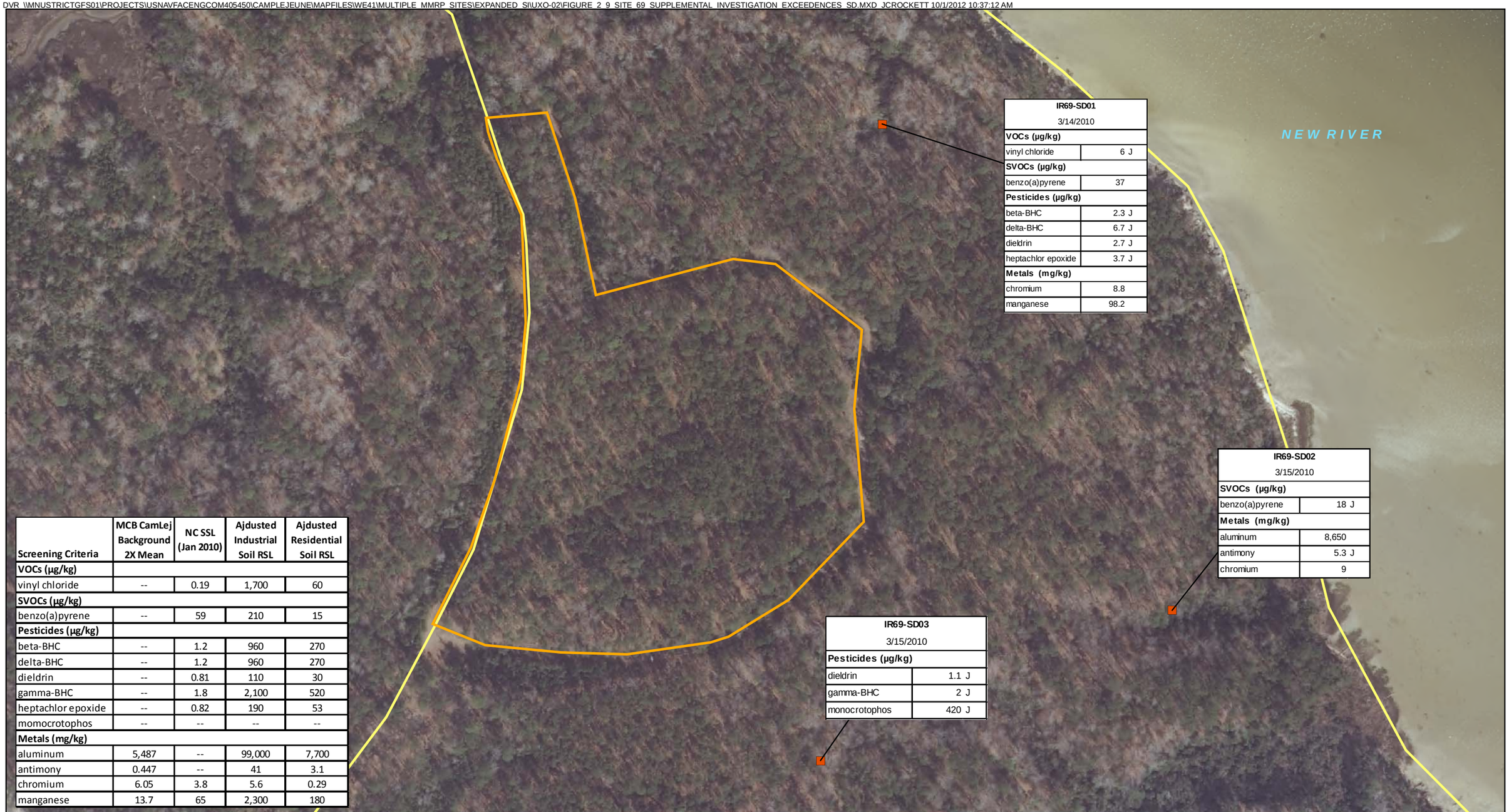

Screening Criteria	MCB CamLej Background 2X Mean	NC SSL (Jan 2010)	Ajdusted Industrial Soil RSL	Ajdusted Residential Soil RSL
VOCs (µg/kg)				
vinyl chloride	--	0.19	1,700	60
SVOCs (µg/kg)				
benzo(a)pyrene	--	59	210	15
Pesticides (µg/kg)				
beta-BHC	--	1.2	960	270
delta-BHC	--	1.2	960	270
dieldrin	--	0.81	110	30
gamma-BHC	--	1.8	2,100	520
heptachlor epoxide	--	0.82	190	53
momocrotophos	--	--	--	--
Metals (mg/kg)				
aluminum	5,487	--	99,000	7,700
antimony	0.447	--	41	3.1
chromium	6.05	3.8	5.6	0.29
manganese	13.7	65	2,300	180

Legend
- Sediment Sampling Locations
- Site 69 Boundary
- Site UXO-02 Boundary

Notes:
J- Analyte present, value may or may not be accurate or precise
R - unreliable result
mg/kg - milligrams per kilogram
µg/kg -micrograms per kilogram
NC SSLs - NC Department of Environment and Natural Resources' Federal Remediation Branch Soil Screening Levels
RSLs - USEPA Regional Screening Levels
SVOC - semi-volatile organic compound
VOC - volatile organic compound
BHC - Benzene Hexachloride

N

0 100 200 400 Feet

1 inch = 200 feet

Figure 2-9
Site 69 Supplemental Investigation Exceedances in Sediment
Site UXO-02 Expanded SI Report
MCIEAST-MCB CAMLEJ
North Carolina

CH2MHILL

Generated By: *K. Rogers/RDU* Checked by: *T. Grim/CLT*

DVR \\MNUSTRICTGFS01\PROJECTS\USNAVFACENGCOM405450\CAMPLEJEUNE\MAPFILES\WE41\MULTIPLE_MMRP_SITES\EXPANDED_SI\UXO-02\FIGURE_2_10_WATER_TABLE_POT_SURFACE_MAP_UXO_02.MXD JCROCKETT 10/1/2012 10:53:11 AM

Legend

- Monitoring Well (Surficial Aquifer)
- Potentiometric Contour (dashed where inferred)
- Groundwater Flow Direction
- Site UXO-02 Boundary
- Site 69 Boundary

Note: Potentiometric surface contours have been inferred beween temporary well locations. Actual conditions may differ from those shown here.
5.29 - Water Level Elevation (feet amsl)
Water levels gauged July 2011
amsi - above mean sea level

N

0 175 350 700 Feet

1 inch = 350 feet

Figure 2-10
Water Table Potentiometric Surface
Site UXO-02 Expanded SI Report
MCIEAST-MCB CAMLEJ
North Carolina

CH2MHILL

SECTION 3

Field Investigation Activities

The ESI field investigation activities at Site UXO-02 were conducted from July to October 2011 in accordance with the ESI Work Plan, MRP Master Project Plan, and Explosives Safety Submission (ESS)-111. The technical approach was developed by the MCIEAST–MCB CAMLEJ Tier I Partnering Team, which consists of representatives from the United States Navy (Navy), MCIEAST–MCB CAMLEJ, USEPA Region 4, and the North Carolina Department of Environment and Natural Resources (NCDENR).

3.1 Field Investigation Activities Summary

This section presents a summary of field activities, which included:

- Site preparation and support (MEC avoidance, utility clearance, vegetation clearance, and surveying)
- Collecting seven surface soil samples for pesticide analysis to further evaluate the potential for ecological risk
- Collecting eight sediment samples for pesticide and total organic carbon analysis to further evaluate the potential for ecological risk
- Installing five permanent monitoring wells and collecting groundwater samples from these wells and five existing wells for metals analysis to further evaluate the potential for human health and ecological risk
- Intrusive Investigation of the sources of geophysical anomalies representing potential subsurface MEC to evaluate potential human health risk

3.2 Site Preparation and Support

This section describes activities conducted in order to safely perform the field investigation activities and to provide appropriate conditions for the reacquisition and intrusive investigation of the geophysical anomalies identified during the DGM survey.

3.2.1 MEC Avoidance

Because of the potential presence of MEC, avoidance measures were implemented. UXO technicians qualified in accordance with Department of Defense (DoD) Explosives Safety Board Technical Paper 18 (Department of Defense Explosives Safety Board, 2004) provided MEC escort and avoidance services to the environmental sampling team and the surveying, utility location, vegetation clearing, and drilling subcontractors (CH2M HILL, 2011c, **Appendix A**).

3.2.2 Buried Utility Location

The North Carolina One-Call Center was contacted regarding the proposed well installation activities. ECLS, Inc., of Erwin, North Carolina, was subcontracted by CH2M HILL to locate and mark underground utilities at the five Site UXO-02 drilling locations.

3.2.3 Vegetation Clearing

Vegetation clearing was accomplished using a Bobcat with a 5-foot-wide clearing tool, followed by manual removal using loppers, hand saws, or similar tools if necessary. Felled brush and trees were left on the site. Trees greater than 3 inches in diameter were not removed unless deemed necessary for drill rig access. Overhanging vines and protruding branches that could interfere with the safe and effective performance of investigation activities were also removed.

3.2.4 Surveying

Land surveying activities were performed by LDSI, Inc., a North Carolina–licensed surveyor from Cedar Point, North Carolina. LDSI, Inc. surveyed horizontal coordinates, top-of-casing elevations, and ground surface elevations for the wells.

3.3 Environmental Investigation Activities

The ESI sampling locations were selected to supplement environmental characterization data collected during the UXO-02 PA/SI and the Site 69 Supplemental Investigation.

3.3.1 Surface Soil Sampling

Seven surface soil samples were collected using the TR-02-1 sampling method (**Figure 3-1**). Thirty aliquots of soil, each of the same approximate amount of soil, were randomly collected from a 1-meter × 1-meter area at each sampling location and composited. A portion of the composited sample was then placed into a 4-ounce glass jar.

The samples were packed into coolers with ice and shipped under chain-of-custody control to ENCO Laboratories of Orlando, Florida, and analyzed for endrin and gamma-BHC by SW-846 USEPA Method 8081B.

3.3.2 Sediment Sampling

Sediment samples were collected from surface water drainage areas at seven sampling locations within UXO-02 and one background sample location considered upstream of Site UXO-02 (**Figure 3-1**). Each sediment sample was collected using a clean trowel and bowl, drained of excess water, and placed into a 4-ounce glass jar. The sediment samples were packed into coolers with ice, shipped under chain-of-custody control to ENCO Laboratories of Orlando, Florida, and analyzed for organochlorine pesticides, monocrotophos (an organophosporous pesticide) (USEPA Methods SW-846 8081B and 8141A), and TOC (Walkley Black method).

3.3.3 Monitoring Well Installation

Five permanent monitoring wells were installed at Site UXO-02 on July 23 and 24, 2011, by Probe Technologies, Inc., using a direct-push technology (DPT) rig equipped with 4.25-inch inner-diameter (ID) hollow-stem augers. Prior to auger drilling, continuous soil cores were collected using DPT tooling with disposable acetate liners. Sampling equipment was decontaminated between borings, and new liners were used to retrieve each successive soil core. The soil cores retrieved from these borings were examined and described using the Unified Soil Classification System. The soil boring logs are provided in **Appendix B.**

Following the DPT soil coring activities, hollow stem augers were used to ream the borehole to the predetermined depths, ranging from 15 to 30 feet bgs. Monitoring well locations are shown on **Figure 3-1**. Each well was constructed with a 2-inch ID Schedule 40 polyvinyl chloride (PVC) screen and riser. The well screens consisted of a 10-foot length of 0.010-inch machine-slotted Schedule 40 PVC placed to bracket the water table. Silica filter sand was placed around the annular space of the screen from the bottom of the boring to 1 foot above the top of the screen. A 2- to 4-foot layer of bentonite granules was placed above the top of the sand pack, and the borehole annulus was then grouted with Portland cement to the land surface. A riser casing was installed approximately 2.5 to 3 feet above the ground surface inside a protective steel stickup and a 3-foot x 3-foot x 4-inch-thick concrete pad was constructed. A watertight, locking, expansion cap was installed on top of the PVC well casing at the surface. A 3-inch diameter bollard was installed at each corner of the concrete pad. The bollards were concrete-filled and extended at least 2 feet into the ground and 3 feet above the ground.

The monitoring wells were developed using a submersible pump and a surge block after waiting at least 24 hours after placement of the filter pack and bentonite. Water quality parameters were monitored during well development, and included turbidity, pH, specific conductivity, dissolved oxygen (DO), oxidation-reduction potential (ORP), and temperature. Development continued until the water quality parameters stabilized and at least three well volumes of water were removed. Following well development, the wells were allowed to equilibrate for at least 24 hours before being purged and sampled.

Well construction details are summarized in **Table 2-18**, and well completion diagrams and development records are provided in **Appendix B**. Surveyed horizontal coordinates, top-of-casing elevations, and ground surface elevations for the permanent wells are provided in **Appendix C**.

3.3.4 Groundwater Sampling

Ten surficial aquifer groundwater monitoring wells were sampled during the ESI. Prior to purging, water level measurements were recorded from each monitoring well **(Table 2-18)**. Water level measurements were converted to water level elevations using the top-of-casing elevation survey data and used to generate the potentiometric surface map for the surficial aquifer presented in Section 2.7.

All wells were purged and groundwater samples collected using a peristaltic pump with disposable polyethylene tubing and low-flow purging and sampling techniques. Water quality parameters (specific conductance, pH, turbidity, temperature, DO, and ORP) were measured during the purging phase using a water quality meter, and the measurements were recorded on the Groundwater Sampling Data Sheets. Field parameters are summarized in **Table 3-1**. Groundwater sampling data sheets are provided in **Appendix D**. The solubility of oxygen in water is 9.09 milligrams per liter (mg/L) at sea level, 21 degrees Celsius (°C), and zero salinity (YSI, 2011). DO concentrations greater than 9 mg/L at MR02-MW01 and MR02-IR69-MW13 indicate that the DO measurements are invalid for these wells. In addition, DO concentrations were measured at some wells with relatively low ORP values, indicating these DO measurements may also be erroneous.

Well purging was considered to be complete when one of the three following conditions was met:

- all field parameters had stabilized over three successive readings and at least one well volume had been purged
- at least three well volumes had been removed
- the well had been pump dry and allowed to recover

Parameters were considered stabilized over three successive readings when measurements agreed as follows:

- pH within 0.1 pH unit
- Conductivity within 3 percent
- ORP within 10 millivolts (mV)
- DO within 10 percent
- Turbidity within 10 percent or as low as practicable given sampling conditions

Before sample collection began, the water quality meter flow-through cell was disconnected from the bladder pump so that the pump discharge flowed directly into the laboratory-supplied sample bottles. New tubing was used for purging and sampling each well. The samples collected from wells MR02-MW-1, MR02-MW02, and MR02-MW05 for analysis of dissolved TAL metals and dissolved hexavalent chromium were filtered in the field using inline 0.45 micron filters.

Depth to water, sampling depth, and total well depth measurements were recorded in the logbook, on groundwater sampling data sheets, or both.

Once sample collection was complete, the sample bottles were packed in coolers with ice for shipment under chain-of-custody control to the laboratory contracted for specific analyses. The groundwater samples were placed in 250-milliliter bottles. Samples for total and dissolved TAL metals analysis were preserved with nitric acid (HNO_3). No preservative was added to the dissolved hexavalent chromium samples. ENCO Laboratory of Jacksonville, Florida, analyzed the samples for total and dissolved TAL metals by SW-846 USEPA Methods 6010C and 7470A. ENCO Laboratory of Orlando, Florida, analyzed the samples for dissolved hexavalent chromium by SW846 USEPA Method 7196A.

3.3.5 Decontamination of Sampling Equipment

Sampling equipment was decontaminated by physically removing residual soil with a brush, washing thoroughly with Alconox, and rinsing with distilled water, then with isopropyl alcohol, and again with distilled water. The equipment was then wrapped in aluminum foil unless used immediately.

3.3.6 Investigation-Derived Waste Management

Investigation-derived waste (IDW) was managed and disposed of in accordance with the Base Waste Management Plan (CH2M HILL, 2011d). IDW generated during field events consisted of soil cuttings from the monitoring well boreholes, well development and purge water, decontamination fluids, disposable equipment, and personal protective equipment (PPE). Liquid wastes were placed in labeled 55-gallon drums and staged at the 90-day storage facility on Parachute Tower Road. Disposable equipment, including PPE, nitrile gloves, and paper towels, was placed in black contractor's trash bags and disposed of in an on-Base dumpster.

3.3.7 Data Validation

The analytical data collected from Site UXO-11 were validated by Environmental Data Services, Inc., of Williamsburg, Virginia.

3.4 MEC Intrusive Investigation Activities

The MEC intrusive investigation was focused on the geophysical anomalies identified during the DGM survey. The DGM survey covered approximately 10 percent (11.3 acres) of Site UXO-02 and identified 1,463 geophysical anomalies for intrusive investigation (**Figure 3-2**).

3.4.1 Field Activities

The following field activities were conducted in August 2011:

- Reacquisition of the geophysical anomalies identified during the DGM survey as representing potential subsurface MEC
- Manual excavation and identification of the sources of anomalies representing potential subsurface MEC
- Removal verification and excavation backfilling
- Demilitarization of material potentially presenting an explosive hazard (MPPEH) and disposal of material documented as safe (MDAS).

USA Environmental, Inc. (USAE) reacquired the locations of the geophysical anomalies and marked the locations with labeled pin flags placed within approximately 1 foot north of each anomaly's coordinates. The intrusive investigation team then identified subsurface geophysical anomalies for excavation using an EM61 metal detector, Whites XLT metal detector, and/or a Schonstedt GA-52Cx magnetometer.

The MEC intrusive investigation of 100 percent of the anomalies representing potential subsurface MEC was conducted in September and October 2011. Excavation of anomalies was performed to a depth of 2 feet bgs. The UXO teams were composed of at least one UXO Technician III and one UXO Technician II, as well as additional UXO technicians to complete the investigation team. Small hand tools, such as shovels, spades, trowels, and pry bars, were used to access the source anomaly. If the item was not ordnance related, it was moved to the non-MPPEH scrap metal collection point.

Following the 100 percent inspection and 100 percent re-inspection of MPPEH and its designation as MDAS, the MDAS was placed in a 55-gallon drum. The resulting MDAS will be disposed of at a qualified smelter/recycler upon completion of all the MMRP sites under this contract. A copy of the DD Form 1328-1A for this material can be found in **Appendix E**.

3.4.2 Quality Control and Quality Assurance

Quality control (QC) inspections were performed by the Unexploded Ordnance Quality Control Specialist (UXOQCS) during fieldwork and consisted of checking 10 percent of the intrusively investigated anomaly locations using an EM61 to determine if all detectable metallic items had been removed. Additional quality assurance (QA)/QC removal verification requirements and analysis were followed, as described in the ESI Work Plan. Seventeen of the nineteen QC seed items buried onsite during the DGM activities were recovered. The other two QC seeds were not identified as anomalies because the EM61 did not pass directly over the QC seeds, resulting in a low signal to noise ratio at those two locations. **Appendix F** presents a technical memorandum explaining in

detail the reasons why the two QC seed items were not intrusively investigated and why continued use of the DGM data is valid.

3.4.3 Operations in Populated and Sensitive Areas

Site UXO-02 is not located in a populated area. Sensitive habitats include jurisdictional wetlands in portions of UXO-02. In addition, the endangered Red-cockaded Woodpecker and rough-leaved loosestrife have been reported as being present at Site UXO-02. MEC operations were conducted in accordance with the Environmental Protection Plan (Section 8 of the ESI Work Plan) to be protective of sensitive areas and all threatened and endangered species.

TABLE 3-1

Summary of Groundwater Field Parameters

Site UXO-02 Expanded SI Report

Station ID	MR02-MW01	MR02-MW02	MR02-MW03	MR02-MW04	MR02-MW05	MR02-IR69-MW09	MR02-IR69-MW11	MR02-IR69-MW12	MR02-IR69-MW13	MR02-IR69-MW14
Sample ID	MR02-GW01-11C	MR02-GW02-11C	MR02-GW03-11C	MR02-GW04-11C	MR02-GW05-11C	MR02-IR69-GW09-11C	MR02-IR69-GW11-11C	MR02-IR69-GW12-11C	MR02-IR69-GW13-11C	MR02-IR69-GW14-11C
Sample Date	7/27/11	7/27/11	7/28/11	7/27/11	7/28/11	7/28/11	7/27/11	7/28/11	7/28/11	7/27/11
Field Parameters										
Dissolved Oxygen (mg/L)	37.5*	5.4	1.38*	2.5*	7.5*	0.59	0.2	3.88	13.2*	3.6
ORP (mv)	127.4	121.4	10.4	-93.1	-35.1	55.4	128.5	182.3	210	161.4
pH	5.25	5.85	7.24	6.01	7.09	4.86	5.51	5.73	4.5	3.74
Specific Conductivity (ms/cm)	0.159	0.141	0.533	0.167	0.371	0.104	0.113	0.168	0.137	0.092
Temperature (deg_C)	19.56	18.91	19.59	21.16	18.17	18.92	18.46	22.75	21.64	21.76
Turbidity (NTU)	9.77	19.7	5.69	2.06	10.6	13.2	9.21	143	10.2	5.77

Notes:

*Dissolved oxygen concentrations greater than 9 mg/L or concentrations greater than 1 mg/L in samples with relatively low ORP values indicate the measurement is invalid.

mg/L - Milligrams per liter

mv - millivolt

deg_C - Celcius

ms/cm - millisiemens per centimeter

NTU - nephelometric turbidity units

DVR \\MNUSTRICTGFS01\PROJECTS\USNAVFACENGCOM405450\CAMPLEJEUNE\MAPFILES\WE41\MULTIPLE_MMRP_SITES\EXPANDED_SI\FIGURE_3_1_SAMPLING_LOCATIONS_UXO_02_LANDSCAPE.MXD JCROCKETT 10/1/2012 10:46:02 AM

Legend

- Existing Monitoring Well (Surficial Aquifer)
- New Monitoring Well (Surficial Aquifer)
- Surface Soil
- Sediment
- Jurisdictional Wetland Area
- Site 69 Boundary
- Site UXO-02 Boundary

N

0 500 1,000 Feet

1 inch = 500 feet

Figure 3-1
Sampling Locations
Site UXO-02 Expanded SI Report
MCIEAST-MCB CAMLEJ
North Carolina

CH2MHILL.

DVR \\MNUSTRICTGFS01\PROJECTS\USNAVFACENGCOM405450\CAMPLEJEUNE\MAPFILES\WE41\MULTIPLE_MMRP_SITES\EXPANDED_SI\FIGURE_3_2_INTRUSIVE_INVESTIGATION_LOCATIONS.MXD JCROCKETT 10/1/2012 10:47:42 AM

Legend

- Geophysical Anomaly (greater than 3 mV)(EM61-MK2)
- DGM Transect
- Site UXO-02 Investigation Areas
- Jurisdictional Wetlands
- Site UXO-02 Boundary
- Site 69 Boundary

N

0 175 350 700 Feet

1 inch = 350 feet

Figure 3-2
Intrusive Investigation Locations
Site UXO-02 Expanded SI Report
MCIEAST-MCB CAMLEJ
North Carolina

CH2MHILL

SECTION 4

Investigation Results

This section presents the findings of the investigative activities conducted between July and September 2011.

4.1 Environmental Investigation Results

The following subsections present and summarize the laboratory data from analysis of surface soil, sediment, and groundwater samples collected.

4.1.1 Surface Soil

Seven surface soil samples were collected and analyzed for Endrin and gamma-BHC concentrations to provide additional data for the ERA. Neither Endrin nor gamma-BHC were detected in surface soil. The analytical results are provided in **Appendix G**.

4.1.2 Sediment

Eight sediment samples, including one background sediment sample, were collected and analyzed for organochlorine pesticides, monocrotophos (an organophosphate pesticide), and total organic carbon to provide additional information for the ERA. Following the third-party data validation of the laboratory analytical data, sediment samples were screened against the Adjusted USEPA RSLs for industrial and residential soil (USEPA, 2011a). The RSLs based on non-carcinogenic effects were divided by 10 to account for exposure to multiple constituents; the RSLs based on carcinogenic effects were used as presented in the USEPA RSL table.

The chlorinated pesticides 4,4'-DDD, 4,4'-DDE and 4,4'-DDT were detected in five of the nine samples, including the background sample. None of the detected analytes exceeded screening levels.

TOC concentrations ranged from 20,000 mg/kg to 360,000 mg/kg. These results were used to assess bioavailability in the ERA.

Although none of the pesticide concentrations exceeded the Adjusted USEPA RSLs, the analytical results for sediment are summarized in **Table 4-1** for convenience. The complete analytical results are provided in **Appendix G**.

4.1.3 Groundwater

This section presents the results for laboratory analysis of groundwater samples collected from the 10 monitoring wells. All 10 samples were analyzed for total metals and three of the samples were analyzed for dissolved metals to assess the effect of sample turbidity on PA/SI groundwater results for samples collected from temporary wells and further evaluate human health risks from exposure to groundwater. Groundwater results were compared to the following standards:

- NC Administrative Code Title 15A, Subchapter 2L Groundwater Quality Standards (NCGWQS) (NCDENR, 2010b)
- Adjusted USEPA Tap Water RSLs (USEPA, 2011a)
- MCIEAST–MCB CAMLEJ background groundwater concentrations (twice the mean BBG concentration), which were available for inorganic constituents only (Baker, 2002)

TABLE 4-1
Summary of Analyte Detections in Sediment
Site UXO-02 Expanded SI Report

Detected Analytes	Frequency of Detection (# detected / # analyzed)	Minimum Concentration	Maximum Concentration	Location of Maximum Concentration	Screening Criteria		Frequency of Exceedances
4,4'-DDD (µg/kg)	5/9	48	820	MR02-SD18	Residential RSL	2,000	0
					Industrial RSL	7,200	0
4,4'-DDE (µg/kg)	5/9	63	330	MR02-SD13	Residential RSL	1,400	0
					Industrial RSL	5,100	0
4,4'-DDT (µg/kg)	4/9	9.5 J	33 J	MR02-SD14	Residential RSL	1,700	0
					Industrial RSL	7,000	0
Total Organic Carbon (mg/kg)	9/9	20,000	360,000	MR02-SD12	NC	NA	NA

Notes:
DDD – dichlorodiphenyldichloroethane
DDE – dichlorodiphenyldichloroethene
DDT – dichlorodiphenyltrichloroethane
µg/kg – microgram(s) per kilogram
mg/kg – milligram(s) per kilogram
NA – Not applicable
NC – No screening criteria are available
RSL – Adjusted United States Environmental Protection Agency Regional Screening Level

The total and dissolved metals concentrations that exceeded twice the mean BBG, the NCGWQS, or the Adjusted USEPA RSLs are shown in **Tables 4-2 and 4-3**, respectively. Analytes with concentration greater than twice the mean BBG and at least one of the regulatory standards or screening criteria are shown on **Figure 4-1**.

The concentrations of nine metals in unfiltered groundwater samples exceeded one of the previously described screening criteria. In the three filtered groundwater samples collected, the dissolved concentrations of five metals exceeded the screening criteria. Aluminum, antimony, chromium, cobalt, iron, and manganese concentrations exceeded twice the mean BBG and either or both the NCGWQS and the Adjusted USEPA Tap Water RSL in one or more wells. Dissolved hexavalent chromium was not detected in any of the three samples analyzed for this parameter.

4.2 MEC Intrusive Investigation

During the intrusive investigation, one MEC item was found (MK II, Hand, Practice, Standard) that was determined to be a discarded military munition (DMM) item, and the sources of 47 of the 1,463 geophysical anomalies were determined to be MPPEH. **Figure 4-2** presents the locations of MPPEH found during the intrusive investigation, and the results of the intrusive investigation are presented in **Appendix H**. The MPPEH items and the corresponding number of locations where they were found are as follows:

- Six flares (M127A1, Star Parachute) - When unexpended, this signal is rocket propelled and fin stabilized, and contains a percussion primer, 0.725 g black powder initiating charge, 39 g black powder propellant, 0.75 black powder expelling charge, and 80 grams of pyrotechnic illuminant (Army, 2002a)
- Five smoke grenades (M18 Smoke, Hand) - When unexpended, contains a M201A1 pyrotechnic, delay-igniting fuze with primer, first fire mixture, ignition mixture, and 326.03 g of smoke mixture which emits red or yellow, or violet smoke when ignited (Army, 2002b)
- One 40-millimeter (mm) cartridge case with no additional description
- Six smoke grenade pieces with no additional nomenclature or description

- Four practice hand grenades (MK II, Hand, Practice, Standard) - When unexpended, consists of a fragmentation body with a filing hole in the base, an M206 igniting fuze, 28.35 g of black powder filler (ORData Online, 2011)
- 25 locations of various small arms cartridge casings (totaling 258 cartridges)

Demolition of the MEC item was conducted by controlled detonation. Two post-detonation surface soil samples were collected from the detonation location, one sample from inside the crater and another from the area surrounding the crater. The sample from inside the crater was collected using the previously described TR-02-1 approach (Thiboutot, Ampleman, and Hewitt, 2002). The surface soil sample from outside the crater was collected utilizing the incremental sampling method, in accordance with standard operating procedure in the MRP Master Project Plan (CH2M HILL, 2008, **Appendix C**).

The samples were transferred into 4-ounce glass jars, packed into coolers with ice, and sent under chain-of-custody control to the contracted laboratories for analysis. The samples were sent to GEL Laboratories, Inc., of Charleston, South Carolina, for the analysis of explosives residues, including PETN, nitroglycerin (SW-846 USEPA Method 8330), and perchlorate (SW-846 USEPA Method 6850) and to ENCO Lab, of Jacksonville, Florida, for the analysis of TAL metals, including mercury (SW-846 USEPA Methods 6010C and 7471B). All analytical results are available in **Appendix G** and summarized in **Table 4-4**. Perchlorate was the only detected explosives residue and the concentrations in the inner crater samples were less than the Adjusted Residential and Industrial RSLs. Perchlorate was not detected in the outer crater sample. The concentrations of arsenic and chromium were greater than the Adjusted Residential Soil RSL but less than twice the mean BBG. The barium concentration in one sample and the manganese concentrations in all samples were greater than twice the mean BBG but less than any of the other criteria. The iron concentrations in all samples was greater than the NC SSL but below twice the mean BBG.

TABLE 4-2

Summary of Total Metals Exceedances in Groundwater

Site UXO-02 Expanded SI Report

MCB CamLej, North Carolina

Chemical Name	Frequency of Detection (# detections / # analyzed)	Minimum Concentration (µg/L)	Maximum Concentration (µg/L)	Location of Maximum Concentration	Screening Criteria (µg/L)		Frequency of Exceedances
Aluminum	11/ 11	78.6 J	5,340	MR02-IR69-MW12	2X Mean BBG	1,886	4
					Tap Water RSL	3,700	1
Antimony	2/ 11	4.6 J	6.8 J	MR02-IR69-MW09	2X Mean BBG	3.28	2
					Tap Water RSL	1.5	2
					NCGWQS	6	1
Arsenic	3/ 11	4.28 J	5.4 J	MR02-MW01	Tap Water RSL	0.045	3
Chromium	10/ 11	0.351 J	5.37 J	MR02-IR69-MW12	2X Mean BBG	3.13	3
					Tap Water RSL	0.043	10
Cobalt	5/ 11	0.786 J	8.65 J	MR02-MW01	2X Mean BBG	3.4	3
					Tap Water RSL	1.1	3
Iron	11/ 11	163	12,600 J	MR02-IR69-MW12	2X Mean BBG	5,999	1
					Tap Water RSL	2,600	3
					NCGWQS	300	9
Lead	4/ 11	1.28 J	4.07 J	MR02-IR69-MW12	2X Mean BBG	2.8	1
Manganese	6/ 11	26.3 J	223	MR02-MW02	2X Mean BBG	214	2
					Tap Water RSL	88	3
					NCGWQS	50	3
Nickel	3/ 11	7.93 j J	22.2	MR02-MW01	2X Mean BBG	7.97	1
Vanadium	6/ 11	0.831 J	8.17 J	MR02-IR69-MW12	2X Mean BBG	5	1

Notes:

µg/L = Micrograms per liter

J = Analyte present, value may or may not be accurate or precise

BBG= Base Background

RSL= United States Environmental Protection Agency Adjusted Regional Screening Level

NCGWQS= North Carolina Groundwater Quality Standards

TABLE 4-3

Summary of Dissolved Metals Exceedances in Groundwater

Site UXO-02 Expanded SI Report

Chemical Name	Frequency of Detection (# detections / # analyzed)	Minimum Concentration (µg/L)	Maximum Concentration (µg/L)	Location of Maximum Concentration	Screening Criteria (µg/L)		Frequency of Exceedances
Arsenic	1/4	4.89 J	4.89 J	MR02-MW01	Tap Water RSL	0.045	1
Cobalt	3/4	5.56 J	8.65 J	MR02-MW01	2X Mean BBG	3.4	3
					Tap Water RSL	1.1	3
Iron	2/4	1,850	1,870	MR02-MW02	NCGWQS	300	2
Manganese	3/4	26.3 J	223	MR02-MW02	Tap Water RSL	88	2
					NCGWQS	50	2
Nickel	3/4	7.93 j J	22.2	MR02-MW01	2X Mean BBG	8	1

Notes:

µg/L = Micrograms per liter

J = Analyte present, value may or may not be accurate or precise

BBG= Base Background

RSL= United States Environmental Protection Agency Adjusted Regional Screening Level

NCGWQS= North Carolina Groundwater Quality Standards

TABLE 4-4
Post-Detonation Surface Soil Detection Analytical Results
Site UXO-02 Expanded SI Report

Sample ID	Camp Lejeune Background 2X Mean	NC SSL (January, 2010)*	Adjusted Industrial Soil RSLs (June, 2011)	Adjusted Residential Soil RSLs (June, 2011)	MR02-SS192D-IC-11D	MR02-SS192-IC-11D	MR02-SS192-OC-11D
Sample Date					10/18/11	10/18/11	10/18/11
Chemical Name							
Explosives Residues and Perchlorate (µg/kg))							
Perchlorate	--	--	72000	5500	5.51	1.09 J	1.07 U
Total Metals (mg/kg)							
Aluminum	5487	--	99000	7700	1,380 E	1,290 E	1,240 E
Arsenic	0.626	5.8	1.6	0.39	0.524 J	0.551 J	0.406 J
Barium	14.5	580	19000	1500	9.87	10	15.1
Beryllium	0.103	--	200	16	0.0128 J	0.0136 J	0.0277 J
Calcium	6360	--	--	--	218	193	672
Chromium	6.05	3.8	5.6	0.29	0.784 J	0.775	0.794
Cobalt	0.294	--	30	2.3	0.0814 J	0.0959 J	0.126 J
Copper	4.83	700	4100	310	0.892 J	1.13	0.713
Iron	3245	150	72000	5500	397 B	408 BE	469 BE
Lead	12.3	270	800	400	2.56	2.69	3.85
Magnesium	238	--	--	--	64.5	60.3	109
Manganese	13.7	65	2300	180	15.2	15	44.4
Mercury	0.081	1	31	2.3	0.00406 J	0.00251 J	0.0115 J
Nickel	1.21	130	2000	150	0.484 J	0.432 J	0.482 J
Potassium	116	--	--	--	54.7 J	57.1 J	71.5
Sodium	80.9	--	--	--	8.67 J	10.5 J	10 J
Vanadium	8.9	--	520	39	1.18 J	1.16 J	1.53
Zinc	10.8	1200	31000	2300	4.2	5.85	3.85

Notes:
Bold box indicates exceedance of NC SSL
Bold text indicates exceedance of Adjusted Industrial Soil RSLs
Shading indicates exceedance of two times the mean base background concentration for surface soil
Underline indicates exceedance of Adjusted Residential Soil RSLs
RSLs were adjusted for noncarcinogens to account for exposure to multiple constituents
B - The analyte was detected in the associated method blank
E - Concentration exceeds calibration range of the instrument
J - Analyte present. Value may or may not be accurate or precise
MG/KG - Milligrams per kilogram
U - The material was analyzed for, but not detected
UG/KG - Micrograms per kilogram

DVR \\MNUSTRICTGES01\PROJECTS\USNAVFACENGCOM405450\CAMPLEJEUNE\MAPFILES\WE41\MULTIPLE_MMRP_SITES\EXPANDED_SI\FIGURE_4_1_METAL_EXCEEDENCES_IN_GW_UXO_02.MXD JCROCKETT 10/1/2012 10:49:43 AM

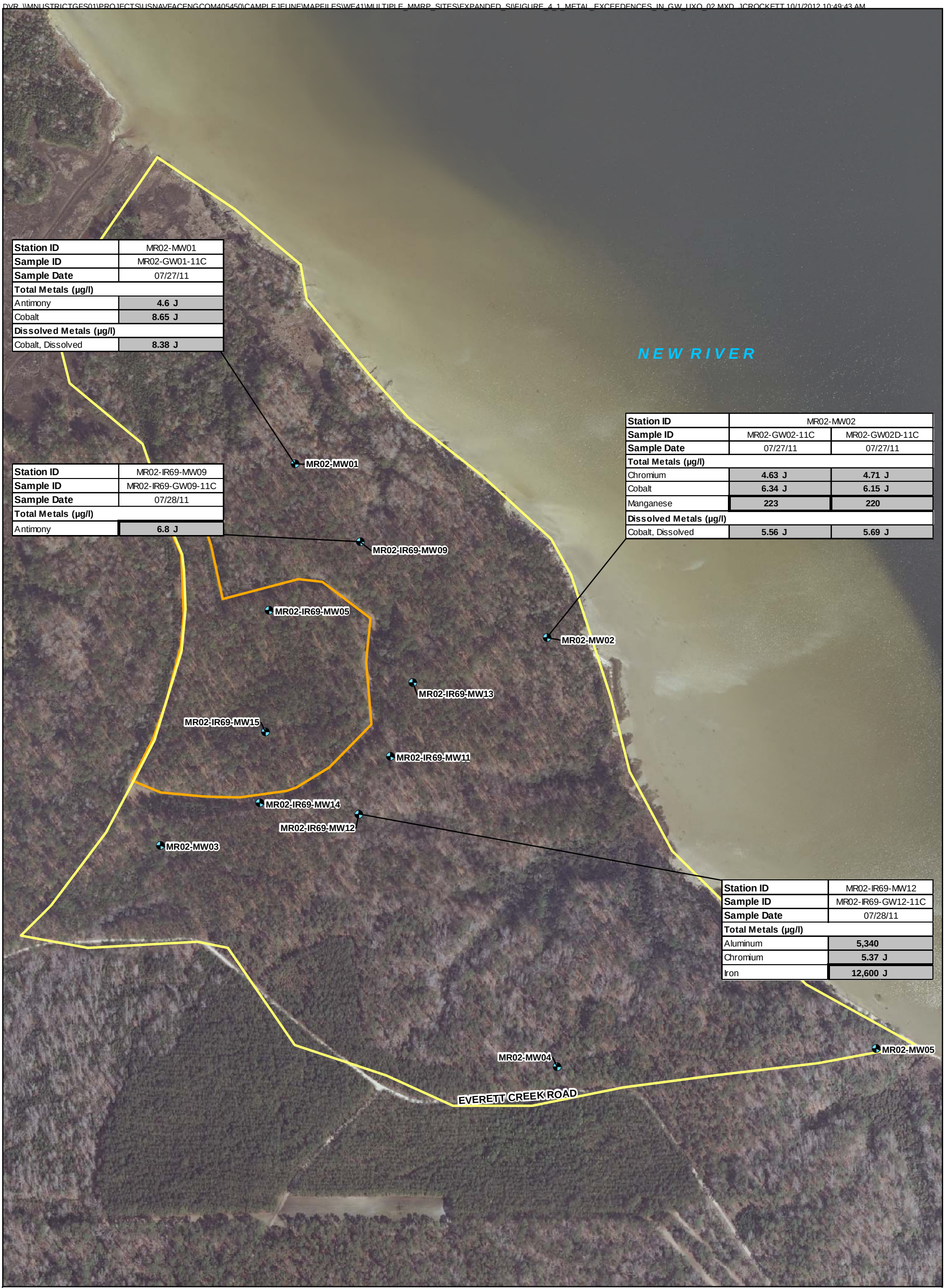

Station ID	MR02-MW01
Sample ID	MR02-GW01-11C
Sample Date	07/27/11
Total Metals (µg/l)	
Antimony	**4.6 J**
Cobalt	**8.65 J**
Dissolved Metals (µg/l)	
Cobalt, Dissolved	**8.38 J**

Station ID	MR02-IR69-MW09
Sample ID	MR02-IR69-GW09-11C
Sample Date	07/28/11
Total Metals (µg/l)	
Antimony	**6.8 J**

Station ID	MR02-MW02	
Sample ID	MR02-GW02-11C	MR02-GW02D-11C
Sample Date	07/27/11	07/27/11
Total Metals (µg/l)		
Chromium	**4.63 J**	**4.71 J**
Cobalt	**6.34 J**	**6.15 J**
Manganese	**223**	**220**
Dissolved Metals (µg/l)		
Cobalt, Dissolved	**5.56 J**	**5.69 J**

Station ID	MR02-IR69-MW12
Sample ID	MR02-IR69-GW12-11C
Sample Date	07/28/11
Total Metals (µg/l)	
Aluminum	**5,340**
Chromium	**5.37 J**
Iron	**12,600 J**

Legend

- Monitoring Well (Surficial Aquifer)
- Site UXO-02 Boundary
- Site 69 Boundary

Notes:
Shading indicates exceedance of two times the mean base background concentration for Groundwater
Bold box indicates exceedance of NCGWQS or the more conservative MCL
Bold text indicates exceedance of Adjusted Tap Water RSLs
RSLs were adjusted for noncarcinogens to account for exposure to multiple constituents
J - Analyte present, value may or may not be accurate or precise
µg/l - Micrograms per liter

N

0 175 350 700 Feet

1 inch = 350 feet

Figure 4-1
Metal Exceedances in Groundwater
Site UXO-02 Expanded SI Report
MCIEAST-MCB CAMLEJ
North Carolina

CH2MHILL

DVR \\MNUSTRICTGFS01\PROJECTS\USNAVFACENGCOM405450\CAMPLEJEUNE\MAPFILES\WE41\MULTIPLE_MMRP_SITES\EXPANDED_SI\UXO-02\FIGURE_4_2_LOCATIONS_OF_MEC_MPPEH_UXO_2.MXD JCROCKETT 10/1/2012 10:55:40 AM

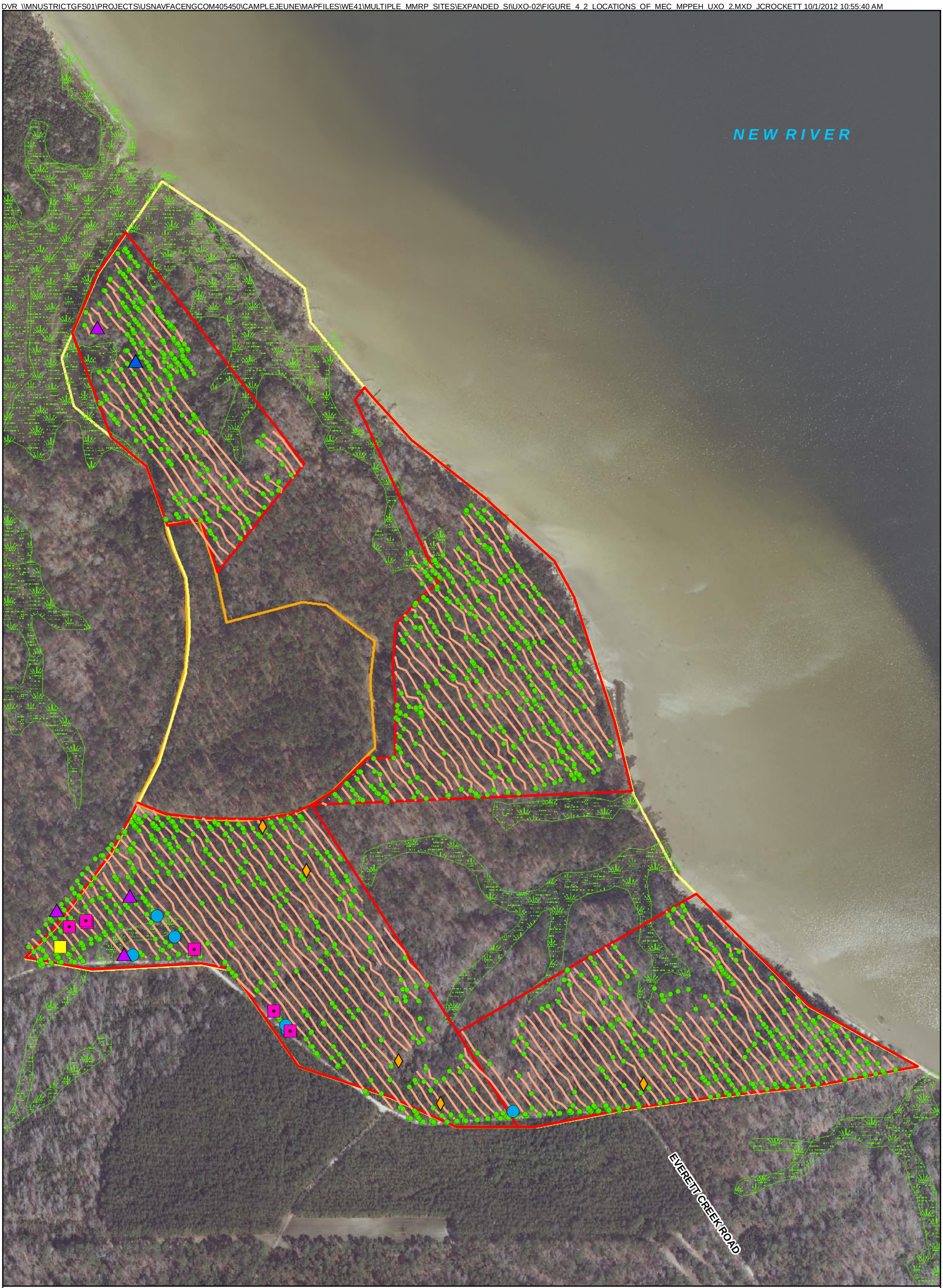

Legend

- Geophysical Anomaly (greater than 3 mV)(EM61-MK2)

MEC

- Grenade, MKII, Practice, Standard, Unexpended

MPPEH

- Smoke Grenade Piece (no nomenclature)
- Flare, M127A1, Star Parachute
- 40mm Cartridge Case
- Grenade, M18, Smoke
- Grenade, MKII, Hand, Practice, Standard

- DGM Transect
- Site UXO-02 Sampling Areas
- Jurisdictional Wetlands
- Site UXO-02 Boundary
- Site 69 Boundary

N

0 175 350 700 Feet

1 inch = 350 feet

Figure 4-2
Locations of MEC and MPPEH
Site UXO-02 Expanded SI
MCIEAST-MCB CAMLEJ
North Carolina

CH2MHILL

SECTION 5

Human Health Risk Evaluation

This section evaluates the potential for human health risks as follows.

- A conservative HHRS was performed to further assess the potential for human health risks associated with exposure to metals in groundwater.
- The soil and sediment data collected as part of this ESI were evaluated to confirm there are no changes to the conclusions of the previous HHRA from the Site 69 Supplemental Investigation (CH2M HILL, 2011a).
- Post-detonation and MEC data were evaluated for potential risks and explosive hazards.

5.1 Human Health Risk Screening for Groundwater

The data collected during this ESI (groundwater samples analyzed for metals) and the metals analysis from the groundwater data evaluated in the UXO-02 PA/SI were combined for this evaluation.

5.1.1 Human Health Risk Screening Methodology

The HHRS was conducted in three steps, using a risk ratio technique (Navy, 2000) described as follows.

5.1.1.1. Step 1

The maximum detected analyte concentrations in groundwater are compared to human health Tap Water RSLs (USEPA, 2011a) and twice the mean BBG concentration for inorganics only (Baker, 2002). Additionally, the maximum detection limit for analytes not detected in the groundwater was compared to the screening levels. RSLs based on non-carcinogenic effects were divided by 10 to account for exposure to multiple analytes (that is, they were adjusted to a hazard quotient [HQ] of 0.1 from the HQ of 1.0 used on the RSL table). RSLs based on carcinogenic endpoints were used as presented in the RSL table and are based on a carcinogenic risk of 1×10^{-6}.

If the maximum detected concentration exceeded the appropriate RSL and twice the mean BBG concentration (for inorganics only), the screening level risk evaluation proceeded to Step 2. If the maximum detection limit for analytes not detected exceeded the screening levels, the constituent was not retained for evaluation in Step 2, but is discussed qualitatively in Section 5.2.2.

5.1.1.2. Step 2

For analytes identified as COPCs in Step 1, a corresponding risk level was calculated using the following equation:

$$\text{corresponding risk level} = \frac{\text{concentration x acceptable risk level}}{\text{RSL}}$$

The concentration is the maximum detected concentration (the same concentration that was used in Step 1), and the acceptable risk level is 1 for non-carcinogens and 10^{-6} for carcinogens. RSLs for non-carcinogenic effects were not adjusted by 10 as was done in Step 1; they were used as presented in the RSL table. The corresponding risk level was calculated using the previous equation. All of the corresponding risk levels for each analyte within a media were summed to calculate the cumulative corresponding hazard index (HI) (for non-carcinogens) and cumulative corresponding carcinogenic risk (for carcinogens). A cumulative corresponding HI was also calculated for each target organ/effect. If the cumulative corresponding HI for a target organ/effect was greater than 0.5 or the cumulative corresponding carcinogenic risk was greater than 5×10^{-5}, the analytes contributing to these values were retained as COPCs and carried forward to Step 3.

5.1.1.3. Step 3

A corresponding risk level was calculated as previously discussed for Step 2. If more than five samples were available for a given media, however, the 95 percent UCL was used in place of the maximum detected concentration in order to obtain a more site-specific risk ratio. If the cumulative corresponding HI by target

organ/effect was greater than 0.5, or the cumulative corresponding carcinogenic risk was greater than 5×10^{-5}, then analytes contributing to these values were considered COPCs.

The most current version of the ProUCL software program (USEPA, 2010b) was used to test the data distribution and calculate 95 percent UCL exposure point concentrations used for the Step 3 risk ratio calculations. In cases where there were fewer than five samples in the data set, or the recommended UCL exceeded the maximum detected concentration, the maximum concentration was used as the exposure point concentration.

5.1.2 Human Health Risk Screening Results

Tables I-1 through **I-3** of **Appendix I** present the risk-based screening and risk ratio evaluation for metals in groundwater using the data collected during this ESI and the metals analysis from the groundwater data evaluated in the UXO-02 PA/SI. As shown in **Table I-1**, nine metals (aluminum, antimony, arsenic, chromium, cobalt, iron, lead, manganese, and vanadium) were identified as COPCs. Based on Step 2 of the screening process (**Table I-2**), none of the COPCs were eliminated and all were carried through to Step 3. Based on Step 3 of the screening process (**Table I-3**), cobalt and iron were eliminated as COPCs; therefore, aluminum, antimony, arsenic, chromium, lead, manganese, and vanadium were identified as COPCs.

Lead, which was retained as a COPC for groundwater, does not have available published toxicity factors. Lead is regulated by USEPA based on blood-lead uptake using a physiologically based pharmacokinetic model called the IEUBK model. The maximum detected concentration of lead in the groundwater (24.1 µg/L) exceeded the groundwater screening level. Risks associated with lead in the groundwater were evaluated for the resident using USEPA's IEUBK model. The principal assumption associated with the use of IEUBK is that a child from age 0 to 7 is the receptor for potential exposure to lead. The average lead concentration is used as the exposure point concentration in the IEUBK model.

The results of the IEUBK model are shown in **Appendix I**. The IEUBK evaluation resulted in a geometric mean blood concentration of 2.7 micrograms per deciliter (µg/dL) of blood for children 0 to 7 years old. Less than one percent of this population had a blood lead level above USEPA's recommended level of 10 µg/dL. USEPA considers lead not to be a health concern if 95 percent of the population has a blood lead level less than 10 µg/dL. Therefore, lead in groundwater does not pose a health risk under residential use of the site. Since residential exposures are the most conservative, risks for any other potential receptor (such as a construction worker) would be less than residential risks. With the exception of the mean lead groundwater concentration, the default parameters associated with the IEUBK model were used in this evaluation (as shown in **Appendix I)**.

The majority of the potential risk associated with the metals in UXO-02 groundwater is associated with the groundwater samples collected in March and April 2010 from temporary wells MR02-TW06, MR02-TW08, MR02-TW12, and MR02-TW17. The relative concentrations of metals in the March 2010, April 2010 and July 2011 sampling events compare to one another as follows. Temporary well MR02-TW06 was next to monitoring well MR02-IR69-MW09, and metals concentrations were much lower in MR02-IR69-MW09 in March 2010 and July 2011 than in the March 2010 sample from MR02-TW06. Temporary well MR02-TW08 was near monitoring well MR02-MW01, and concentrations in MR02-MW01 were lower in July 2011 (it was not sampled in 2010) than concentrations in MR02-TW08 in the April 2010 sample. The same is true for MR02-TW12, which was near MR02-MW02, and MR02-TW17, which was close to MR02-MW03. The concentrations of metals detected in the 2010 temporary well samples are likely associated with particulates and not necessarily representative of current groundwater conditions and concentrations. Therefore, the potential risks estimated using these data are most likely overestimated. A risk screening was also performed using only the July 2011 data (**Tables I-4** through **I-6**, **Appendix I**). As shown in **Table I-6**, chromium is the only COPC when using the 2011 data alone.

The highest concentration of aluminum was detected in MR02-TW17 in March 2010 (55,400 µg/L). MR02-MW03, which is near the former location of MR02-TW17, was sampled in July 2011 and yielded detection of aluminum at a concentration of 78.6 µg/L. Concentrations of aluminum in MR02-TW06 (42,000 µg/L), TW08 (28,400 µg/L), and MR02-TW12 (14,100 µg/L) were also elevated in March and April 2010. Aluminum was detected at a concentration of 1,280 µg/L in the primary sample from MR02-IR69-MW09 (next to the former location of MR02-TW06) in March 2010; it was not detected in the duplicate sample (with a detection limit of 200 µg/L). In July

2011, only 716 µg/L of aluminum were detected in MR02-IR69-MW09. MR02-MW01 (near the former location of MR02-TW08) was sampled in July 2011, with a detected concentration of aluminum of 147 µg/L. MR02-MW02 (near the former location of MR02-TW12) was sampled in July 2011, with an aluminum concentration of 2,500 µg/L. The concentrations of aluminum in only one of the 2011 samples (MR02-IR69-MW12) exceeded the screening level (the Adjusted Tap Water RSL); however, it did not exceed the unadjusted tap water RSL.

Antimony was only detected in four of the 45 groundwater samples. Antimony exceeded the screening level (the Adjusted Tap Water RSL) but not the Tap Water RSL in two samples (from MR02-IR69-MW09 and MR02-MW01) during July 2011. The concentrations in MR02-IR69-MW09 and MR02-MW01 from July 2011 were similar to the concentrations detected in the temporary wells at these locations (MR02-TW06 and MR02-TW08) in March and April 2010. Two of the four detected concentrations of antimony exceeded the maximum contaminant level (MCL).

All of the detected concentrations of arsenic were below the MCL of 10 µg/L. Additionally, arsenic was only detected above twice the mean BBG concentration in two of the samples (MR02-TW08 at 6.2 µg/L and MR02-TW12 at 9.3 µg/L, compared to twice the mean BBG concentration (5.8 µg/L). Arsenic was not detected above twice the mean BBG concentrations in any of the 2011 samples.

All of the detected concentrations of chromium were below the MCL of 100 µg/L. Additionally, chromium only exceeded twice the mean BBG concentration in one of the ten 2011 ESI samples; however, there were many exceedances of twice the mean BBG concentration in the March 2010 temporary well samples. The highest detected concentration of chromium was in MR02-TW17, at 56.8 µg/L. The monitoring well closest to this temporary well, MR02-MW03, had a much lower concentration when sampled in July 2011 (0.604 µg/L). The exceedances of the chromium screening level (the Tap Water RSL) were based on a comparison to the hexavalent chromium Tap Water RSL. The use of hexavalent chromium for comparison to total chromium is extremely conservative since the presence of trivalent chromium is strongly favored in natural waters because the concentrations of constituents known to reduce hexavalent chromium to trivalent chromium generally far outweigh the concentrations of the few constituents known to oxidize trivalent chromium to hexavalent chromium. Furthermore, once reduced, trivalent chromium is very stable in aquatic environments and highly unlikely to oxidize to hexavalent chromium. Thus, chromium in groundwater is more likely to be in its trivalent form than its hexavalent form (Fendorf and Zasoski, 1992; Milacic and Stupar, 1995; Weaver and Hochella, 2003). All of the chromium concentrations were below the trivalent chromium Tap Water RSL.

Although manganese groundwater concentrations exceeded the Adjusted Tap Water RSL, there were no exceedances of the non-adjusted Tap Water RSL. Additionally, manganese is an essential human nutrient. The adequate intake (AI) for manganese for children ranges from 0.6 to 1.5 milligrams per day (mg/day) (USEPA, 2001a). The average daily intake rate of manganese by children from UXO-02 groundwater used as a potable supply would be 0.15 mg/day (the concentration on **Table I-3** times the child ingestion rate of 1 liter per day [L/day] times an adjustment factor of 1 mg/1000 µg), and is below the AI. The AI for manganese for adults is 2.3 mg/day (USEPA, 2001a), while the average daily intake of manganese by adults from UXO-02 groundwater is 0.3 mg/day (concentration on **Table I-3** times the adult ingestion rate of 2 L/day times an adjustment factor of 1 mg/1000 µg), which is below the AI. Therefore, no unacceptable risks associated with exposure to manganese in groundwater would be expected.

Vanadium concentrations in the 2011 ESI samples did not exceed the screening level (the Adjusted Tap Water RSL). Vanadium concentrations detected in 2010 in MR02-TW06, MR02-TW08, MR02-TW17, and MR02-TW12 exceeded Adjusted RSLs, but did not exceed unadjusted RSLs. Concentrations of vanadium in the permanent monitoring wells next to the former locations of temporary wells MR02-MW08, MR02-MW01, MR02-MW03, and MR02-MW02, respectively, did not exceed the screening level in the 2011 ESI samples.

5.2 Soil and Sediment Qualitative Evaluation

As presented in Section 3, surface soil samples were collected at six locations as part of this ESI and analyzed for endrin and gamma-BHC. Sediment samples were collected at eight locations and analyzed for chlorinated pesticides and monocrotophos, an organophosphate pesticide. A quantitative HHRS assessment was not

performed using this data; however, the data were compared to the concentrations used in the Site 69 Supplemental Investigation to determine if any changes to the conclusions of the HHRA were needed based on this additional data.

Since endrin and alpha-BHC were not detected in any of the samples collected during the ESI, the conclusions offered in the Site 69 Supplemental Investigation, that there were no unacceptable risks associated with exposure to surface soil, remain unchanged.

Three pesticides were detected in the ESI sediment samples, 4,4'-DDD, 4,4'-DDE, and 4,4'-DDT. Although the maximum detected concentrations of these constituents were higher in the ESI samples than in the Site 69 Supplemental Investigation samples (see **Appendix I, Table I-7)**, the concentrations were still below the screening levels (the USEPA Residential soil RSL [USEPA, 2011a]). Therefore, the conclusions from the Site 69 Supplemental Investigation, that there were no unacceptable risks associated with exposure to sediment, remain unchanged.

5.3 Post-Detonation Sampling

Demolition of one MEC item was conducted through controlled detonation, as discussed in Section 4.2. Two post-detonation soil samples were collected, one from inside the crater and one from outside the crater, as described above. The soil samples were analyzed for explosives residues and metals, and the detected concentrations were compared to residential and industrial soil RSLs and twice the mean BBG concentration for inorganics (**Table 4-4**). RSLs based on non-carcinogenic effects were divided by 10 to account for exposure to multiple analytes (that is, they were adjusted to a hazard quotient [HQ] of 0.1 from the HQ of 1.0 used on the RSL table). RSLs based on carcinogenic endpoints were used as presented in the RSL table and are based on a carcinogenic risk of 1×10^{-6}. The only detected constituents with concentrations above the residential soil RSL were arsenic and chromium; however, the concentrations were below the industrial soil RSL and twice the mean BBG. Therefore, there are no unacceptable risks associated with exposure to soil at the detonation location above background levels.

5.4 Evaluation of Explosive Hazards

Multiple approaches to evaluating the explosives hazards at MR sites have been developed, although no single methodology has been universally accepted (MacDonald, et al., 2004). Most of these efforts consider the magnitude of risk posed by the presence of MEC to be most strongly influenced by the severity of an unintentional detonation and the probability of the occurrence of an unintentional detonation.

The factors affecting the severity of an unintentional detonation include the nature and net explosive weight of the energetic material, the material and structural characteristics of the casing, and the combined effect of these factors on the hazardous fragmentation distance. In addition, the severity increases with an increased number of receptors and the closer proximity of any receptors to an explosion.

The factors affecting the probability of an unintentional detonation include the number of potential receptors, the frequency and duration of receptor exposure to areas containing MEC, the depth of MEC relative to land surface, and the depth of potential intrusion resulting from receptor activities. The presence of a fuze and the sensitivity of the fuze to various forms of disturbance, and the stability of any energetic materials remaining in the MEC also influence the probability of an unintentional detonation.

HAZARD SEVERITY – At Site UXO-02, MEC and MPPEH items found during the intrusive investigation included M127A1 parachute flares, M18 smoke grenades, and MKII practice hand grenades, none of which contain high explosives. The flares and smoke grenades contain pyrotechnic material and are generally not fragment producing munitions. The MKII practice hand grenade contains a spotting charge designed to produce smoke and sound, rather than fragmentation. Although the severity of an unintentional detonation of an unexpended MK II practice hand grenade is intended to be low by design, it is likely to be greater than that produced by the pyrotechnic munitions found at UXO-02 and will therefore be the item considered in this evaluation.

The MK II practice hand grenade contains a relatively small amount of black powder as a spotting charge. In addition, the cork located in the bottom of the practice grenade is intended to vent the gasses produced through detonation before sufficient pressure is generated to damage the body of the grenade. The relatively low power

of the spotting charge and the integral gas vent would be expected to preclude fragmentation of the grenade body. In addition, the spatial extent of any other explosive effects such as heat, pressure, and sound should be limited. Therefore, the structure of the grenade body and the nature and quantity of the explosives would limit the severity of an unintended detonation.

PROBABILITY – Access to Site UXO-02 is currently restricted by the guarded MARSOC access gate and a second locked gate located on Everett Creek Road. The nature of the occasional training and sampling activities conducted at the site (a relatively low number of site workers with infrequent site visits of short duration) minimize the probability of an unintentional detonation under current conditions.

The combination of the low severity and low probability of an unintentional detonation of MEC identified at Site UXO-02 indicate that the overall potential hazard due to encountering MEC is low.

5.5 Summary

Based on the evaluation of available data, the results of the HHRS and additional considerations indicate that there are no unacceptable risks to human health associated with metals in groundwater, or contact with surface soil, surface water, and sediment. Additionally, there are no unacceptable risks to human health associated with exposure to soil relating to the MEC demolition controlled detonation. The risks associated with MEC are low due to the low severity and low probability of an unintended detonation of the type of MEC identified during the ESI.

Per the Site 69 Supplemental Investigation (CH2M HILL, 2011a), unacceptable risks remain associated with potable use of groundwater, primarily due to the concentrations of VOCs in the surficial and Castle Hayne aquifers associated with the Site 69 waste disposal area.

SECTION 6

Baseline Ecological Risk Assessment

A Baseline Ecological Risk Assessment (BERA) was conducted to further evaluate potential ecological risk from pesticides in surface soil and sediment. This section presents a summary of the BERA, and the complete BERA is presented in **Appendix J**.

The BERA included Steps 6 and 7 of the USEPA 8-step ERA process. Step 6 consists of site investigation and risk analysis. Step 7 is risk characterization.

A revised problem formulation narrowed the focus of additional risk assessment activities to endrin and gamma-BHC in soil and organochlorine pesticides and monocrotophos in sediment (CH2M HILL, 2011b). The data set for soil included 12 samples (six historical and six new) and one background sample (**Table J-2, Appendix J**). The data set for sediment included 10 samples (three historical and seven new) and one background sample (**Table J-2, Appendix J**). In addition to pesticides analyses in soil and sediment, sediment was also analyzed for TOC to assess bioavailability.

Potential risk to soil and sediment invertebrates was evaluated by comparing exposure point concentrations (that is, conservative estimates of the mean concentrations) to background and to ecological screening values (ESVs). HQs were calculated by dividing exposure concentrations by ESVs. Risk to wildlife was also assessed with HQs, derived by dividing exposure point concentrations by toxicity reference values. Another line of evidence for the assessment was a qualitative biota survey at each sampling location.

Pesticides were infrequently detected in soil and concentrations were relatively low when compared to ecological benchmarks. It is unlikely pesticides occur at high enough concentration over a large enough area to significantly impact the local population of soil invertebrates to the extent that upper trophic level receptors are affected by the loss of a prey base. A pattern of low abundance observed in the biota survey was relatively consistent and therefore unlikely to be a result of contamination; soil type is more likely to explain the soil invertebrate community characteristics.

While there were a few elevated HQs for sediment invertebrates, frequency of detection was limited. This translates to limited exposure when viewed on a site-wide basis. Most importantly, high sediment TOC concentrations likely limit the bioavailability of the pesticides in site sediments. It is unlikely pesticides occur at high enough concentration over a large enough area to significantly impact the local populations of sediment invertebrates to the extent that upper trophic level receptors are affected by the loss of a prey base. The qualitative biota survey of sediment was not useful as a diagnostic tool for risk given the variability in physical conditions of the sampled areas and the poor habitat conditions for benthic invertebrates (shallow, stagnant water, or no standing water).

The food chain modeling indicated that pesticides are not present at high enough concentrations over a large enough area to significantly impact populations of upper trophic level receptors. In addition, the biota survey suggests that use of the sampled areas may be limited for receptors that consume soil and sediment invertebrates.

The overall conclusion of the assessment was that pesticides in site soil and sediment are unlikely to pose significant risks to ecological receptors. Additionally, the suspected source area (Site 69) is being evaluated for remedial alternatives that would eliminate any significant exposure to ecological receptors at Site 69 and further surface transport to other UXO-02 areas.

Demolition of the one MEC item found was conducted through controlled detonation, as discussed in Section 4.2. Two post-detonation soil samples were collected, one from inside the crater and one from outside the crater, as described above. The soil samples were analyzed for explosives residues and metals, and the detected concentrations were compared to the EPA Ecological Soil Screening Levels (EcoSSL) (USEPA, 2011b). When no EcoSSL was available for a constituent, the samples were compared to the EPA Region 4 value (USEPA, 2001c).

Because there were no screening values for perchlorate in these two sources, perchlorate concentrations were compared to the lowest available value of 1,000 µg/kg from the EPA Ecological Risk Assessment Bulletin (USEPA, 2002).

Aluminum and iron were the only constituents with concentrations were above the screening values. However, the concentrations were consistent with the Camp Lejeune background levels (Baker, 2001). As a result, none of the constituents from the detonation of the MEC are expected to pose a significant risk to ecological receptors.

SECTION 7

Conclusions and Recommendations

This Expanded SI completes the assessment of all site media and MEC at both UXO-02 and Site 69, building on the conclusions and recommendations from the UXO-02 PA/SI (CH2M HILL, 2012) and the Site 69 Supplemental Investigation (CH2M HILL, 2011a). This section provides summary of the ESI findings, presents conclusions, and provides recommendations.

7.1 Conclusions

7.1.1 Environmental Investigation

Environmental sampling was conducted during this ESI to further evaluate potential risks from pesticides in surface soil and sediment and metals in groundwater. Surface soil samples were analyzed for endrin and gamma-BHC and neither were detected in any of the samples. The chlorinated pesticides 4,4'-DDD, 4,4'-DDE and 4,4'-DDT were detected in five of nine sediments samples, including the background sample, at concentrations below the screening criteria. In groundwater samples collected from four of the ten wells sampled during the ESI, aluminum, antimony, chromium, cobalt, iron, and manganese concentrations exceeded twice the mean BBG and the NCGWQS or the Adjusted USEPA Tap Water RSL in one or more wells. In filtered groundwater samples, only cobalt concentrations exceeded twice the mean BBG and the Adjusted USEPA Tap Water RSL.

No unacceptable human health or ecological risks were identified from potential exposure to soil, surface water, sediment, or metals in surficial aquifer groundwater. Per the Site 69 Supplemental Investigation (CH2M HILL, 2011a), unacceptable risks remain associated with potable use of groundwater, primarily due to the concentrations of VOCs in the surficial and Castle Hayne aquifers associated with the Site 69 waste disposal area.

7.1.2 MEC Intrusive Investigation

The characterization of Site UXO-02 through the intrusive investigation of approximately 10 percent of the site sufficiently characterized the nature and extent of MEC at this site. One MEC item (an unexpended MK II practice hand grenade in the subsurface) and 47 MPPEH (surface and subsurface) were found during the intrusive investigation. The MEC and MPPEH items found during the intrusive investigation included M127A1 parachute flares, M18 smoke grenades, and MKII practice hand grenades, none of which contain high explosives. The items found are related to training and maneuver area activities and are not consistent with the historical usage of this range as a mortar range. Access to Site UXO-02 is currently restricted by the guarded MARSOC access gate and a second locked gate located on Everett Creek Road. The nature of the occasional training and sampling activities conducted at the site (a relatively low number of site workers with infrequent site visits of short duration) minimize the probability of an unintentional detonation under current conditions. The combination of the low severity and low probability of an unintentional detonation of MEC identified at Site UXO-02 indicate that the overall potential hazard due to encountering MEC is low.

The single unexpended MK II practice hand grenade (MEC) was disposed of by controlled detonation. Post-detonation surface soil samples were collected and analyzed for MC. Perchlorate was the only explosives residue detected. The perchlorate concentrations in the inner crater samples were below the Adjusted Residential and Industrial RSLs and perchlorate was not detected in the outer crater sample. No unacceptable human health and ecological risks would be expected due to exposure to surface soil in the vicinity of the detonation site since the concentrations of all detected constituents with concentrations greater than twice the mean BBG were less than the Adjusted RSLs and the NC SSL.

7.2 Recommendations

Based on the previously presented conclusions, no further action is recommended for the portion of UXO-02 located outside of the Site 69 perimeter fence. This ESI concludes the evaluation of UXO-02 under the MMRP and no unacceptable risks were identified from exposure to MC in site media and the overall potential hazard due to encountering MEC is low. The remaining environmental impacts to be further assessed are associated with potential risks from exposure to waste and the VOC groundwater plume (Site 69). A Feasibility Study, Proposed Remedial Action Plan, and ROD are underway to address these risks. The Final ROD for Site 69 will also document site closure for the surrounding UXO-02 area.

Because it is not possible to provide 100 percent assurance that all MEC items have been detected and removed, it would be prudent to provide "3R" munitions awareness training to those conducting intrusive activities within the MRS and to provide on-call support from MCIEAST–MCB CAMLEJ EOD or a qualified UXO contractor for inspection and disposal of suspected MEC/MPPEH that may be unearthed.

SECTION 8

References

AH Environmental Consultants (AHEC). 2002. *Wellhead Protection Plan, 2002 Update*. Prepared for the Naval Facilities Engineering Command, Atlantic Division, Norfolk, Virginia. August.

Baker Environmental, Inc. (Baker). 2000. *Final Interim Record of Decision, Operable Unit No. 14 (Site 69).* June.

Baker. 2001. *Final Base Background Soil Study Report, Marine Corps Base Camp Lejeune, North Carolina*. April.

Baker. 2002. *Draft Base Background Groundwater Study, Marine Corps Base, Camp Lejeune, North Carolina.* August.

Cardinell, A. P., S. A. Berg, and O. B. Lloyd, Jr. 1993. *Water Resources Investigations Report 93-4049: Hydrogeologic Framework of U.S. Marine Corps Base at Camp Lejeune, North Carolina*. U.S. Geological Survey.

CH2M HILL. 2008. *Munitions Response Program Master Project Plans, Marine Corps Base Camp Lejeune, Jacksonville, North Carolina*. March.

CH2M HILL. 2009. *Draft Site Specific Work Plan Addendum for Preliminary Assessment/Site Inspection, Site UXO-02, Unnamed Explosives Range, ASR #2.201, Marine Corps Base Camp Lejeune, Jacksonville, North Carolina*. November.

CH2M HILL. 2011a. *Supplemental Investigation, Site 69, Operable Unit No. 14 – Rifle Range Chemical Dump. Marine Corps Base Camp Lejeune, Jacksonville, North Carolina*. August.

CH2M HILL. 2011b. *Site-specific Work Plan Addendum for Intrusive Investigation for Military Munitions Response Program Sites:UXO-01 – Former Live Hand Grenade Course (ASR #2.23), UXO-01 - Former Gas Chamber (ASR #2.79a, b, c), UXO-02 - Former Unnamed Explosive Contaminated Range (ASR #2.201) UXO-07 – Former Practice Hand Grenade Course (ASR #2.77), UXO-11 - Former B-5 Practice Hand Grenade Course (ASR #2.81), UXO-14 - Former Indoor Pistol Range (ASR #2.199) and Former Gas Chamber (ASR #2.200), UXO-17 - Former Firing Position 2 (ASR #2.12), UXO-21 - Former D-Area Gas Chamber (2D MAR DIV) (ASR #2.204). Marine Corps Base Camp Lejeune, Jacksonville, North Carolina.* September.

CH2M HILL. 2011c. *Base Wide Explosives Safety Submission for Munitions Response Activities at Marine Corps Base Camp Lejeune (ESS-111), Marine Corps Base Camp Lejeune, Jacksonville, North Carolina*. August.

CH2M HILL. 2011d. *Base Waste Management Plan, Marine Corps Base Camp Lejeune, Jacksonville, North Carolina*. May.

CH2M HILL. 2012. *Preliminary Assessment/ Site Inspection Report MMRP Site UXO-02, Unnamed Explosive Contaminated Range, ASR #2.201, Marine Corps Base Camp Lejeune, Jacksonville, North Carolina*. January.

Department of Defense Explosives Safety Board. 2004. *Minimum Qualifications for Unexploded Ordnance (UXO) Technicians and Personnel*. Technical Paper 18. December.

Fendorf, S. E., and R. J. Zasoski. 1992. Chromium (III) Oxidation by ∂-MnO_2. 1. Characterization. *Environ. Sci. Technol.* 26: 79–85.

MCB Camp Lejeune. 2002. *Environmental Assessment Construction of a Consolidated Academic Instruction Facility and Barracks, Camp Johnson, Marine Corps Base Camp Lejeune, Jacksonville, North Carolina*. July.

MacDonald, J., Knopman, D, Lockwood, J., Cecchine, G., Willis, H. 2004. Unexploded ordnance : A critical review of risk assessment methods. RAND Corporation. Santa Monica, CA.

Milacic, R., and J. Stupar. 1995. Fractionation and Oxidation of Chromium in Tannery Waste and Sewage Sludge-Amended Soils. *Environ. Sci. Technol.* 29: 486–493.

National Academy of Sciences (NAS), Institute of Medicine, Food and Nutrition Board. 2001. http://www.iom.edu/Object.File/Master/7/294/0.pdf.

North Carolina Department of Environment and Natural Resources (NCDENR). 2010a. *Federal Remediation Branch Target Screening Values*. January. http://portal.ncdenr.org/web/wm/sf

NCDENR. 2010b. *Subchapter 2L, Classifications and Water Quality Standards Applicable to the Groundwaters of North Carolina.* Title 15A, Department of Environment and Natural Resources, Division of Water Quality. January.

ORData Online, Accessed 12/2/2011. http://maic.jmu.edu/ordata/srdetaildesc.asp?ordid=3845

Redmond, B.R., Officer in Charge-Range Control, MCB Camp Lejeune (1985). Personal Communication, April 19, 2011.

Thiboutot, S., G. Ampleman, and A.D. Hewitt. 2002. Technical Report ERDC/CRREL TR-02-1, "Guide for Characterization of Sites Contaminated with Energetic Materials." US Army Corps of Engineers, Engineer Research and Development Center.

United States Army (Army). 2002a. *Technical Manual TM 43-0001-37*. Army Ammunition Data Sheets: Military Pyrotechnics, (Federal Supply Class 1370). January.

United States Army (Army). 2002b. *Technical Manual TM 43-0001-29*. Army Ammunition Data Sheets for Grenades. November.

United States Army Corps of Engineers (USACE). 2001. *Final Range Identification and Preliminary Range Assessment, Marine Corps Base Camp Lejeune, Onslow, North Carolina.* St. Louis District. December.

United States Environmental Protection Agency (USEPA). 2001a. *Dietary Reference Intakes for Vitamin A, Vitamin K, Arsenic, Boron, Chromium, Copper, Iodine, Iron, Manganese, Molybdenum, Nickel, Silicon, Vanadium, and Zinc (2001)*; These reports may be accessed via www.nap.edu

USEPA. 2001b. *Supplemental Guidance to RAGS: Region 4 Bulletins, Ecological Risk Assessment.* Originally published November 1995. Website version last updated November 30, 2001: http://www.epa.gov/region4/waste/ots/ecolbul.htm.

USEPA. 2001c. Region 4 Recommended Ecological Screening Values. http://www.epa.gov/region04/waste/ots/ecolbul.htm.

USEPA. 2002. Ecological Risk Assessment Bulletin, 2/11/2002. Waste Management Division Freshwater Surface Water Screening Values for Hazardous Waste Sites. February.

USEPA. 2009. National Recommended Water Quality Criteria. http://water.epa.gov/scitech/swguidance/standards/current/upload/nrwqc-2009.pdf

USEPA. 2010a. *Regional Screening Levels for Chemicals at Superfund Sites*. June.

USEPA. 2010b. *ProUCL Version 4.1 Technical Guide (Draft),* Office of Research and Development, May.

USEPA. 2011a. *Regional Screening Levels for Chemical Contaminants at Superfund Sites*. June http://www.epa.gov/reg3hwmd/risk/human/rb-concentration_table/Generic_Tables/index.htm

USEPA. 2011b. Ecological Soil Screening Levels. http://www.epa.gov/ecotox/ecossl/.

United States Navy (Navy). 2000. *Overview of Screening, Risk Ratio, and Toxicological Evaluation*. Procedures for Northern Division Human Health Risk Assessments. May.

Water and Air Research. 1983. *Initial Assessment Study of Marine Corps Base*, Camp Lejeune. North Carolina.

Weaver, R. M., and M. F. Hochella. 2003. The reactivity of seven Mn-oxides with Cr3+aq: A comparative analysis of a complex, environmentally important redox reaction. *Amer. Mineralogist* 88:2016-2027.

YSI, Inc. (YSI). 2011. Oxygen Solubility Table. www.**ysi**.com/media/pdfs/DO-**Oxygen**-Solubility-Table.pdf. October.

Appendix A
Previous Investigation Results

TABLE A1-1a
UXO-02 Surface Soil Analytical Results
Site UXO-02, Unnamed Explosive Contaminated Range
PA/SI Report
MCIEAST-MCB CAMLEJ, North Carolina

Station ID	Camp Lejeune Background SS 2X Mean	NCSSLs (January, 2010)	Adjusted Industrial Soil RSLs (May, 2010)	Adjusted Residential Soil RSLs (May, 2010)	MR02-SS01	MR02-SS02	MR02-SS03	MR02-SS04	MR02-SS05	MR02-SS06	MR02-SS07	MR02-SS08	MR02-SS09	MR02-SS10	MR02-SS11		MR02-SS12	MR02-SS13
Sample ID					MR02-SS01-10A	MR02-SS02-10A	MR02-SS03-10A	MR02-SS04-10A	MR02-SS05-10A	MR02-SS06-10A	MR02-SS07-10A	MR02-SS08-10A	MR02-SS09-10A	MR02-SS10-10A	MR02-SS11-10A	MR02-SS11D-10A	MR02-SS12-10A	MR02-SS13-10A
Sample Date					02/01/10	02/01/10	02/01/10	02/01/10	02/01/10	02/01/10	02/01/10	02/01/10	02/01/10	02/01/10	02/01/10	02/01/10	02/01/10	02/01/10
Chemical Name																		
Semivolatile Organic Compounds (µg/kg)																		
No Detections																		
Explosives (µg/kg)																		
No Detections																		
Total Metals (mg/kg)																		
Aluminum	5,487	--	99,000	7,700	9,320 J	7,330 J	8,140 J	7,760 J	10,900 J	7,440	9,590 J	9,200 J	10,000	6,830 J	4,910	6,340	13,600	8,160 J
Antimony	0.447	--	41	3.1	1.7 UJ	2.4 UJ	2.2 UJ	2.1 UJ	3.5 UJ	2.5 UJ	2.4 UJ	1.6 UJ	2.6 UJ	2.2 UJ	2 UJ	1.9 UJ	3 UJ	2.5 UJ
Arsenic	0.626	5.8	1.6	0.39	1.6	1.1	0.72	0.82	0.83 J	0.9 J	**3.2**	0.46	0.74 J	1.2	0.38 J	0.41 J	0.94 J	0.54 J
Barium	14.5	580	19,000	1,500	12.6 J	49 U	44 U	42 U	93.2	51 U	57.1	32 U	52.3	43 U	39 U	38 U	60 U	37.1 J
Beryllium	0.103	--	200	16	0.14 J	0.14 J	0.31 J	0.2 J	0.51 J	1.3 U	0.51 J	0.4 J	1.3 U	0.26 J	0.98 U	0.96 U	1.5 U	0.33 J
Cadmium	0.033	3	80	7	0.59 U	0.85 U	0.77 U	0.73 U	1.2 U	0.88 U	0.04 J	0.57 U	0.9 U	0.75 U	0.69 U	0.67 U	1 U	0.89 U
Calcium	6,360	--	--	--	840 U	1,200 U	1,100 U	1,000 U	3,500	1,300 U	2,780 J	810 U	1,300 U	1,100 U	980 U	960 U	1,500 U	1,370
Chromium	6.05	3.8	5.6	0.29	**10.7**	**6.3**	5.3	**7**	**6.7**	**6.6**	**10.9**	5.1	5.2	5.2	3.5	3.9	**7.6**	5.2
Cobalt	0.294	--	30	2.3	0.61 J	0.46 J	0.73 J	0.59 J	0.68 J	0.5 J	0.54 J	0.58 J	0.78 J	0.51 J	0.31 J	0.35 J	1 J	0.8 J
Copper	4.83	700	4,100	310	4.2 U	6.1 U	5.5 U	5.2 U	8.7 U	6.3 U	6 U	4.1 U	6.4 U	5.4 U	4.9 U	4.8 U	7.4 U	6.4 U
Iron	3,245	150	72,000	5,500	6,110	4,670	3,380	4,160	3,370	3,070	9,250	2,470	2,110	3,420	1,450	1,630	3,820	2,810
Lead	12.3	270	800	400	7.8	9.7	13.6	8.6	15.5	7.9	11.8	8.8	12.5	7.8	7	6.9	14.1	7.5
Manganese	13.7	65	2,300	180	18.9	20.3	19.6	25.7	150	18.9	54.2	19.6	62.4	23.7	16.3	15.2	34.2	29.9
Mercury	0.081	1	31	2.3	0.01 J	0.05 J	0.04 J	0.04 J	0.08 J	0.03 J	0.05 J	0.03 J	0.06 J	0.06 J	0.02 J	0.03 J	0.07 J	0.03 J
Nickel	1.21	130	2,000	150	2.4 J	2.1 J	2.9 J	2.4 J	3.8 J	10 U	3.3 J	2.6 J	10 U	2 J	7.8 U	7.7 U	12 U	3 J
Potassium	116	--	--	--	479 J	328 J	286 J	336 J	477 J	1,300 U	1,200 U	233 J	1,300 U	239 J	980 U	960 U	1,500 U	309 J
Selenium	0.563	2.1	510	39	0.24 J	1.2 U	0.28 J	0.14 J	0.38 J	0.34 J	0.52 J	0.44 J	0.45 J	0.36 J	0.22 J	0.29 J	0.57 J	0.24 J
Silver	0.14	3.4	510	39	1.7 U	2.4 U	2.2 U	2.1 U	3.5 U	2.5 U	2.4 U	1.6 U	2.6 U	2.2 U	2 U	1.9 U	3 U	2.5 U
Sodium	80.9	--	--	--	840 U	1,200 U	1,100 U	1,000 U	1,700 U	1,300 U	1,200 U	810 U	1,300 U	1,100 U	980 U	960 U	1,500 U	1,300 U
Vanadium	8.9	--	520	39	13.8	10.1 J	8.2 J	10	9.4 J	13 U	18.1	6.8 J	13 U	7.5 J	9.8 U	9.6 U	15 U	7.1 J
Zinc	10.8	1,200	31,000	2,300	8.4	12	14.1	11.1	16.3	6.3	27.2	9.6	24.8	9.6	6.4	6.4	34.9	10.2

Notes:

Shading indicates exceedance of two times the mean base background concentration for surface soil

Bold box indicates exceedance of NC SSLs

Bold text indicates exceedance of Adjusted Industrial Soil RSLs

Underline indicates exceedance of Adjusted Residential Soil RSLs

RSLs were adjusted for noncarcinogens to account for exposure to multiple constituents

NA - Not analyzed

J - Analyte present, value may or may not be accurate or precise

U - The material was analyzed for, but not detected

UJ - Analyte not detected, quantitation limit may be inaccurate

mg/kg - Milligrams per kilogram

µg/kg - Micrograms per kilogram

TABLE A1-1a
UXO-02 Surface Soil Analytical Results
Site UXO-02, Unnamed Explosive Contaminated Ra
PA/SI Report
MCIEAST-MCB CAMLEJ, North Carolina

Station ID	MR02-SS14	MR02-SS15	MR02-SS16	MR02-SS17	MR02-SS18	MR02-SS19	MR02-SS20	MR02-SS21		MR02-SS22	MR02-SS23	MR02-SS24	MR02-SS25	MR02-SS26	MR02-SS27	MR02-SS28	MR02-SS29	MR02-SS30
Sample ID	MR02-SS14-10A	MR02-SS15-10A	MR02-SS16-10A	MR02-SS17-10A	MR02-SS18-10A	MR02-SS19-10A	MR02-SS20-10A	MR02-SS21-10A	MR02-SS21D-10A	MR02-SS22-10A	MR02-SS23-10A	MR02-SS24-10A	MR02-SS25-10A	MR02-SS26-10A	MR02-SS27-10A	MR02-SS28-10A	MR02-SS29-10A	MR02-SS30-10A
Sample Date	02/03/10	02/01/10	02/01/10	02/01/10	02/01/10	02/03/10	02/01/10	02/01/10	02/01/10	02/01/10	02/03/10	02/01/10	02/01/10	02/01/10	02/03/10	02/03/10	02/03/10	02/01/10
Chemical Name																		
Semivolatile Organic Compounds (µg/kg)																		
No Detections																		
Explosives (µg/kg)																		
No Detections																		
Total Metals (mg/kg)																		
Aluminum	5,040	7,400	5,540	6,290 J	6,250	4,920	8,450	7,660	7,500	4,230	6,740	6,660	10,900	7,930 J	7,570	6,380	6,400	7,570
Antimony	3 U	2.5 UJ	2.4 UJ	0.15 J	2.1 UJ	0.14 J	0.11 J	2.5 UJ	1.7 UJ	2.2 UJ	1.6 UJ	2 UJ	2.1 UJ	2.5 UJ	2 U	1.7 U	0.13 J	1.8 UJ
Arsenic	1.4	0.62 J	0.7 J	0.71 J	0.78 J	1	1 J	0.56 J	0.71 J	0.4 J	0.7	**8.3 J**	0.67 J	1.1	1.4	0.74	1.6	1 J
Barium	19 J	51 U	48 U	62 U	43 U	20.4 J	35 U	49 U	35 U	44 U	26.5 J	40 U	42 U	37 J	40.4	20.6 J	20.2 J	36 U
Beryllium	1.5 U	1.3 U	1.2 U	0.16 J	1.1 U	1.2 U	0.88 U	1.2 U	0.87 U	1.1 U	0.82 U	1 U	1.1 U	0.26 J	0.98 U	0.85 U	0.99 U	0.89 U
Cadmium	1 U	0.89 U	0.84 U	1.1 U	0.75 U	0.83 U	0.61 U	0.86 U	0.61 U	0.77 U	0.02 J	0.7 U	0.74 U	0.86 U	0.68 U	0.59 U	0.7 U	0.62 U
Calcium	1,500 U	1,300 U	1,200 U	1,600 U	1,100 U	1,200 U	880 U	1,200 U	870 U	1,100 U	820 U	1,060	1,100 U	1,910	980 U	850 U	990 U	890 U
Chromium	5	**6.4**	4.9	4.9	5.2	5.5	**9.4**	4.7	4.7	2.9	3.2	**12.9**	**5.7**	5.6	**5.9**	3.3	5.1	**6.5**
Cobalt	0.28 J	0.4 J	0.53 J	0.58 J	0.4 J	0.26 J	0.53 J	0.42 J	0.42 J	0.35 J	0.49 J	1.7 J	0.89 J	0.73 J	0.6 J	0.47 J	9.9 U	0.9 J
Copper	7.4 U	6.4 U	6 U	7.8 U	5.3 U	5.9 U	4.8	6.2 U	4.3 U	5.5 U	4.1 U	5 U	5.3 U	6.2 U	4.9 U	4.2 U	5 U	4.4 U
Iron	2,800	2,280	2,780	2,870	3,040	2,300	4,540	2,790	2,970	1,230	1,470	20,800	2,970	3,040	3,240	1,620	2,940	3,440
Lead	11	9.8	7.8	12.5	10.4	15.6	10.4	10.2	10.6	7.3	10.7	24.3	12.2	9.8	10.6	9.2	20.6	10.4
Manganese	14.6	20.5	29.9	21.1	12	20.8	17.2	23.8	22.2	31.2	53.8	157	35.6	43.1	67.6	20.9	17.9	55.2
Mercury	0.1 J	0.06 J	0.12 J	0.08 J	0.06 J	0.06 J	0.04 J	0.06 J	0.05 J	0.04 J	0.05 J	0.02 J	0.03 J	0.07 J	0.04 J	0.03 J	0.04 J	0.04 J
Nickel	12 U	10 U	9.6 U	2.2 J	8.5 U	9.5 U	7 U	9.8 U	6.9 U	8.8 U	3.4 J	9.3	8.5 U	2.6 J	7.8 U	6.8 U	2.1 J	7.1 U
Potassium	1,500 U	1,300 U	1,200 U	357 J	1,100 U	1,200 U	880 U	1,200 U	870 U	1,100 U	820 U	1,000 U	1,100 U	318 J	980 U	850 U	990 U	890 U
Selenium	0.38 J	0.28 J	0.28 J	0.35 J	0.31 J	0.16 J	0.36 J	0.33 J	0.38 J	0.19 J	0.27 J	0.31 J	0.35 J	0.4 J	0.34 J	0.28 J	0.36 J	0.39 J
Silver	3 U	2.5 U	2.4 U	3.1 U	2.1 U	2.4 U	1.8 U	2.5 U	1.7 U	2.2 U	1.6 U	2 U	2.1 U	2.5 U	2 U	1.7 U	2 U	1.8 U
Sodium	1,500 U	1,300 U	1,200 U	1,600 U	1,100 U	1,200 U	880 U	1,200 U	870 U	1,100 U	22.6 J	1,000 U	1,100 U	1,200 U	980 U	850 U	29.5 J	890 U
Vanadium	15 U	13 U	12 U	8.4 J	11 U	12 U	12.4	12 U	8.7 U	11 U	4.7 J	11.4	11 U	8.1 J	9.8 U	8.5 U	9.1 J	9
Zinc	53.3	18.8	8.8	7.8	8.2	6.2	11.7	9.6	10.3	6	8	12.3	12.2	11	15.8	8.7	6.6	14.3

Notes:

Shading indicates exceedance of two times the mean base background concentration for surface soil

Bold box indicates exceedance of NC SSLs

Bold text indicates exceedance of Adjusted Industrial Soil RSLs

Underline indicates exceedance of Adjusted Residential Soil RSLs

RSLs were adjusted for noncarcinogens to account for exposure to multiple constituents

NA - Not analyzed

J - Analyte present, value may or may not be accurate or precise

U - The material was analyzed for, but not detected

UJ - Analyte not detected, quantitation limit may be inaccurate

mg/kg - Milligrams per kilogram

µg/kg - Micrograms per kilogram

TABLE A1-1a
UXO-02 Surface Soil Analytical Results
Site UXO-02, Unnamed Explosive Contaminated Ra
PA/SI Report
MCIEAST-MCB CAMLEJ, North Carolina

Station ID	MR02-SS31		MR02-SS32	MR02-SS33	MR02-SS34	MR02-SS35	MR02-SS36	MR02-SS37	MR02-SS38	MR02-SS39	MR02-SS40	MR02-SS41		MR02-SS42	MR02-SS43	MR02-SS44	MR02-SS45	MR02-SS46
Sample ID	MR02-SS31-10A	MR02-SS31D-10A	MR02-SS32-10A	MR02-SS33-10A	MR02-SS34-10A	MR02-SS35-10A	MR02-SS36-10A	MR02-SS37-10A	MR02-SS38-10A	MR02-SS39-10A	MR02-SS40-10A	MR02-SS41-10A	MR02-SS41D-10A	MR02-SS42-10A	MR02-SS43-10A	MR02-SS44-10A	MR02-SS45-10A	MR02-SS46-10A
Sample Date	02/01/10	02/01/10	02/03/10	02/03/10	02/03/10	02/03/10	02/03/10	02/03/10	02/01/10	02/03/10	02/03/10	02/03/10	02/03/10	02/03/10	02/03/10	02/03/10	02/03/10	02/03/10
Chemical Name																		
Semivolatile Organic Compounds (µg/kg)																		
No Detections																		
Explosives (µg/kg)																		
No Detections																		
Total Metals (mg/kg)																		
Aluminum	6,400	5,530	2,040	3,630	8,970	7,250	7,260	4,180	3,380	5,330	3,940	6,250	6,050	2,870	1,420	5,230	2,890	1,440
Antimony	3.3 UJ	2.2 UJ	0.17 J	2.4 U	2.2 UJ	2.8 U	2.9 U	2.1 UJ	2 UJ	2 UJ	0.32 J	2 UJ	2.3 UJ	1.9 UJ	2.2 UJ	1.7 UJ	2.5 UJ	0.15 J
Arsenic	0.6 J	0.51 J	0.7	0.67	1	0.95	1.4	0.96	0.4 J	0.85	0.76	0.66	0.83	0.82	0.54 U	0.84	0.66	0.46
Barium	65 U	48.1	17.1 J	31.2 J	33.4 J	25 J	26.1 J	9.7 J	40 U	38.2 J	19 J	35.9 J	27.7 J	16.6 J	10.6 J	37.3	23.6 J	7.4 J
Beryllium	1.6 U	1.1 U	1.1 U	1.2 U	1.1 U	1.4 U	1.5 U	1 U	1 U	1 U	1.2 U	1 U	1.2 U	0.95 U	1.1 U	0.84 U	1.2 U	0.85 U
Cadmium	1.1 U	0.78 U	0.8 U	0.85 U	0.02 J	1 U	1 U	0.73 U	0.7 U	0.02 J	0.87 U	0.02 J	0.02 J	0.66 U	0.76 U	0.04 J	0.03 J	0.6 U
Calcium	1,630	2,070	1,100 U	1,240	1,100 U	1,400 U	1,500 U	1,000 U	1,000 U	1,220	1,200 U	1,000 U	1,200 U	996 J	1,100 U	1,340	1,200 U	850 U
Chromium	3.7	3.3	2.3 U	2.5	**5.8**	**6.2**	4.4	3 J	2.2	3.6	3.5	3.2	3.1	2.6	1.3 J	2.8	2 J	1.7 U
Cobalt	0.77 J	0.66 J	0.13 J	0.3 J	11 U	0.5 J	0.5 J	10 U	0.49 J	0.63 J	0.22 J	0.94 J	0.86 J	9.5 U	0.1 J	8.4 U	12 U	0.06 J
Copper	8.2 U	5.6 U	5.7 U	6.1 U	5.5 U	7.1 U	7.3 U	5.2 U	5 U	5 U	6.2 U	5.1 U	5.8 U	4.7 U	5.4 U	4.9	6.2 U	4.3 U
Iron	1,700	1,470	954	1,500	2,690	2,030	2,260	1,640	984	1,850	1,840	1,730	1,700	1,310	687	1,640	1,120	638
Lead	11	9.8	5.7	8.1	11.1	8.6	12.4	7.6	7.1	9.3	7	10.7	10	7.1	5.6	9.9	6.8	4.3
Manganese	176	196	16.1	91	61.7 J	22	55.8	17.8	68	110 J	100	117 J	90.4 J	60.4	48.8	84.8 J	210 J	9.8
Mercury	0.05 J	0.05 J	0.04 J	0.04 J	0.05 J	0.06 J	0.05 J	0.01 J	0.03 J	0.03 J	0.05 J	0.04 J	0.03 J	0.01 J	0.03 J	0.03 J	0.04 J	0.01 J
Nickel	13 U	8.9 U	9.2 U	9.8 U	2.8 J	11 U	12 U	8.3 U	8 U	2.3 J	10 U	2.5 J	2.4 J	1.1 J	8.7 U	2 J	1.6 J	6.8 U
Potassium	1,600 U	1,100 U	1,100 U	1,200 U	1,100 U	1,400 U	1,500 U	1,000 U	1,000 U	1,000 U	1,200 U	1,000 U	1,200 U	950 U	1,100 U	840 U	1,200 U	850 U
Selenium	0.33 J	0.28 J	0.19 J	1.2 U	0.28 J	0.24 J	0.47 J	0.14 J	0.25 J	0.21 J	0.2 J	0.18 J	0.14 J	0.18 J	1.1 U	0.22 J	1.2 U	0.85 U
Silver	3.3 U	2.2 U	2.3 U	2.4 U	2.2 U	2.8 U	2.9 U	2.1 U	2 U	2 U	2.5 U	2 U	2.3 U	1.9 U	2.2 U	0.06 J	2.5 U	1.7 U
Sodium	1,600 U	1,100 U	1,100 U	1,200 U	1,100 U	1,400 U	1,500 U	1,000 U	1,000 U	1,000 U	1,200 U	1,000 U	1,200 U	15.5 J	1,100 U	840 U	1,200 U	850 U
Vanadium	16 U	11 U	11 U	12 U	8.2 J	14 U	15 U	5.9 J	10 U	5.5 J	12 U	5 J	5 J	4.4 J	2.3 J	4.3 J	3.1 J	8.5 U
Zinc	14.7	14.3	6.5	10.8	14.3	8.4	8.7	5.4	43.2	10.3	6.4	16.2	14	8.8	4 J	12.6	9.7	3.4 U

Notes:

Shading indicates exceedance of two times the mean base background concentration for surface soil

Bold box indicates exceedance of NC SSLs

Bold text indicates exceedance of Adjusted Industrial Soil RSLs

Underline indicates exceedance of Adjusted Residential Soil RSLs

RSLs were adjusted for noncarcinogens to account for exposure to multiple constituents

NA - Not analyzed

J - Analyte present, value may or may not be accurate or precise

U - The material was analyzed for, but not detected

UJ - Analyte not detected, quantitation limit may be inaccurate

mg/kg - Milligrams per kilogram

µg/kg - Micrograms per kilogram

TABLE A1-1a
UXO-02 Surface Soil Analytical Results
Site UXO-02, Unnamed Explosive Contaminated Ra
PA/SI Report
MCIEAST-MCB CAMLEJ, North Carolina

Station ID	MR02-SS47	MR02-SS48	MR02-SS49	MR02-SS50	MR02-SS51		MR02-SS52	MR02-SS53	MR02-SS54	MR02-SS55	MR02-SS56	MR02-SS57	MR02-SS58	MR02-SS59	MR02-SS60	MR02-SS61		MR02-SS62
Sample ID	MR02-SS47-10A	MR02-SS48-10A	MR02-SS49-10A	MR02-SS50-10A	MR02-SS51-10A	MR02-SS51D-10A	MR02-SS52-10A	MR02-SS53-10A	MR02-SS54-10A	MR02-SS55-10A	MR02-SS56-10A	MR02-SS57-10A	MR02-SS58-10A	MR02-SS59-10A	MR02-SS60-10A	MR02-SS61-10A	MR02-SS61D-10A	MR02-SS62-10A
Sample Date	02/03/10	02/03/10	02/03/10	02/03/10	02/03/10	02/03/10	02/03/10	02/03/10	02/03/10	02/03/10	02/03/10	02/03/10	02/03/10	02/03/10	02/03/10	02/03/10	02/03/10	02/03/10
Chemical Name																		
Semivolatile Organic Compounds (µg/kg)																		
No Detections																		
Explosives (µg/kg)																		
No Detections																		
Total Metals (mg/kg)																		
Aluminum	2,780	3,870	2,530	765	995	958	2,280	1,720	2,310	3,280	1,360	1,810	1,100	1,750	1,390	577	597	1,370
Antimony	2.3 UJ	2.1 UJ	0.17 J	2.8 UJ	2.2 UJ	2 UJ	1.7 U	1.8 UJ	0.21 J	1.7 U	2.2 UJ	1.9 U	2.2 UJ	2.4 UJ	2.3 U	2.2 UJ	2.6 UJ	2.4 U
Arsenic	0.6	1.2	0.76	0.7 U	0.55 U	0.57	0.43 U	0.46 U	0.62 U	0.68	0.6	0.59	0.54 U	0.62	0.59	0.54 U	0.66 U	0.71
Barium	18.3 J	9.2 J	22.6 J	6.8 J	4.8 J	3.8 J	8.9 J	6.4 J	18.3 J	7.7 J	9.7 J	7.3 J	5.8 J	12.8 J	4.5 J	6.6 J	5.9 J	12 J
Beryllium	1.1 U	1 U	1.4 U	1.4 U	1.1 U	1 U	0.86 U	0.93 U	1.2 U	0.87 U	1.1 U	0.97 U	1.1 U	1.2 U	1.2 U	1.1 U	1.3 U	1.2 U
Cadmium	0.01 J	0.74 U	0.02 J	0.03 J	0.01 J	0.7 U	0.61 U	0.65 U	0.87 U	0.61 U	0.76 U	0.68 U	0.76 U	0.83 U	0.82 U	0.02 J	0.92 U	0.85 U
Calcium	1,100 U	1,000 U	1,400 U	1,400 U	1,100 U	1,000 U	860 U	930 U	1,200 U	870 U	1,100 U	970 U	1,100 U	1,200 U	1,200 U	1,100 U	1,300 U	1,200 U
Chromium	2 J	3.4	2.7 U	2.8 U	2.2 U	2 U	1.8	1.3 J	1.5 J	2.6	1.2 J	1.4 J	1.2 J	2 J	2.3 U	0.77 J	0.81 J	1.4 J
Cobalt	11 U	0.2 J	0.2 J	0.08 J	0.07 J	10 U	0.13 J	0.13 J	0.1 J	0.08 J	11 U	0.09 J	11 U	0.14 J	12 U	0.06 J	0.06 J	0.11 J
Copper	5.7 U	5.3 U	6.8 U	7 U	5.5 U	5 U	4.3 U	4.6 U	6.2 U	4.4 U	5.4 U	4.9 U	5.4 U	6 U	5.9 U	5.4 U	6.6 U	6 U
Iron	998	2,040	780	340	436	396	839	636	673	1,330	719	682	455	715	1,020	495	472	626
Lead	7.1	6.4	7.3	4.6	5.4	4.8	4.1	3.8	6.2	5.6	5	5.4	3.5	9.8	3.9	4	3.5	5.5
Manganese	146 J	16 J	46.3	36.4	9.3	12.6	37.1	49 J	57.9	22.8	37.7	43.7	59.1	24.4	15	33.2	23.4	37.6
Mercury	0.03 J	0.02 J	0.04 J	0.05 J	0.03 J	0.03 J	0.15 U	0.18 U	0.05 J	0.02 J	0.01 J	0.03 J	0.03 J	0.06 J	0.01 J	0.02 J	0.01 J	0.04 J
Nickel	1.2 J	1.1 J	1.2 J	0.61 J	0.59 J	0.5 J	6.9 U	0.59 J	9.9 U	7 U	8.7 U	7.8 U	8.6 U	9.5 U	9.4 U	8.6 U	10 U	9.7 U
Potassium	1,100 U	1,000 U	1,400 U	1,400 U	1,100 U	1,000 U	860 U	930 U	1,200 U	870 U	1,100 U	970 U	1,100 U	1,200 U	1,200 U	1,100 U	1,300 U	1,200 U
Selenium	1.1 U	0.13 J	0.18 J	1.4 U	1.1 U	1 U	0.86 U	0.93 U	1.2 U	0.13 J	1.1 U	0.97 U	1.1 U	0.18 J	1.2 U	1.1 U	1.3 U	0.16 J
Silver	2.3 U	2.1 U	2.7 U	2.8 U	2.2 U	2 U	1.7 U	1.8 U	2.5 U	1.7 U	2.2 U	1.9 U	2.2 U	2.4 U	2.3 U	2.2 U	2.6 U	2.4 U
Sodium	1,100 U	1,000 U	24.6 J	55.9 J	21.8 J	22.1 J	860 U	930 U	1,200 U	870 U	1,100 U	970 U	1,100 U	1,200 U	1,200 U	1,100 U	1,300 U	1,200 U
Vanadium	3.1 J	6 J	2.7 J	1.4 J	1.6 J	1.5 J	8.6 U	1.8 J	12 U	8.7 U	2.3 J	9.7 U	2 J	3.2 J	12 U	1.7 J	1.8 J	12 U
Zinc	6.1	4.3	6.5	6.3	4.4 U	4 U	8.5	36.8	5.6	3.9	3.1 J	3.9 U	3.9 J	5	4.7 U	3.6 J	3.4 J	4.8 U

Notes:

Shading indicates exceedance of two times the mean base background concentration for surface soil

Bold box indicates exceedance of NC SSLs

Bold text indicates exceedance of Adjusted Industrial Soil RSLs

Underline indicates exceedance of Adjusted Residential Soil RSLs

RSLs were adjusted for noncarcinogens to account for exposure to multiple constituents

NA - Not analyzed

J - Analyte present, value may or may not be accurate or precise

U - The material was analyzed for, but not detected

UJ - Analyte not detected, quantitation limit may be inaccurate

mg/kg - Milligrams per kilogram

µg/kg - Micrograms per kilogram

TABLE A1-1a
UXO-02 Surface Soil Analytical Results
Site UXO-02, Unnamed Explosive Contaminated Ra
PA/SI Report
MCIEAST-MCB CAMLEJ, North Carolina

Station ID	MR02-SS63	MR02-SS64	MR02-SS65	MR02-SS66	MR02-SS67	MR02-SS68	MR02-SS69	MR02-SS70	MR02-SS71		MR02-SS72	MR02-SS73	MR02-SS74	MR02-SS75	MR02-SS76	MR02-SS77	MR02-SS78	MR02-SS79	MR02-SS80
Sample ID	MR02-SS63-10A	MR02-SS64-10A	MR02-SS65-10A	MR02-SS66-10A	MR02-SS67-10A	MR02-SS68-10A	MR02-SS69-10A	MR02-SS70-10A	MR02-SS71-10A	MR02-SS71D-10A	MR02-SS72-10A	MR02-SS73-10A	MR02-SS74-10A	MR02-SS75-10A	MR02-SS76-10A	MR02-SS77-10A	MR02-SS78-10A	MR02-SS79-10A	MR02-SS80-10A
Sample Date	02/03/10	02/03/10	02/03/10	02/03/10	02/03/10	02/03/10	02/03/10	02/03/10	02/03/10	02/03/10	02/03/10	02/03/10	02/03/10	02/03/10	02/03/10	02/03/10	02/03/10	02/03/10	02/03/10
Chemical Name																			
Semivolatile Organic Compounds (µg/kg)																			
No Detections																			
Explosives (µg/kg)																			
No Detections																			
Total Metals (mg/kg)																			
Aluminum	1,730	1,590	550	966 J	1,380	1,880	4,600	938	749 J	645 J	365	1,290	2,580	2,960	569	654	850	1,980	2,620
Antimony	3.9 U	2.5 U	2.6 UJ	1.9 U	2.4 UJ	2.5 UJ	2 UJ	2.3 UJ	3.6 U	2.8 U	2.2 UJ	2.1 U	2 UJ	2 UJ	2.6 UJ	1.7 UJ	2.2 UJ	2.2 UJ	1.7 UJ
Arsenic	0.97 U	0.62 U	0.7	0.46 U	0.59 U	0.75	0.82	0.57 U	0.89 U	0.7 U	0.54 U	0.52 U	0.73	0.78	0.66	0.5	0.54 U	0.63	0.5
Barium	18.6 J	8.7 J	7.9 J	37 U	3.3 J	12.1 J	21.6 J	3.1 J	71 U	56 U	1.7 J	5.7 J	11.3 J	16.9 J	7.8 J	3.4 J	43 U	10.8 J	8.8 J
Beryllium	1.9 U	1.2 U	1.3 U	0.93 U	1.2 U	1.3 U	0.98 U	1.1 U	1.8 U	1.4 U	1.1 U	1 U	1 U	1 U	1.3 U	0.84 U	1.1 U	1.1 U	0.87 U
Cadmium	1.4 U	0.86 U	0.9 U	0.65 U	0.83 U	0.03 J	0.68 U	0.8 U	1.2 U	0.98 U	0.75 U	0.73 U	0.71 U	0.04 J	0.91 U	0.59 U	0.75 U	0.02 J	0.02 J
Calcium	1,900 U	1,200 U	1,300 U	930 UJ	1,200 U	1,300 U	980 U	1,100 U	1,800 UJ	1,400 UJ	1,100 U	1,000 U	1,000 U	1,000 U	1,300 U	840 U	1,100 UJ	1,100 U	870 U
Chromium	3.9 U	2.5 U	0.78 J	1.1 J	1.3 J	1.7 J	3 J	0.99 J	1 J	0.9 J	0.59 J	2.1 U	2 U	2.1 J	0.85 J	0.88 J	2.2 U	2.2 U	1.8 J
Cobalt	0.1 J	0.1 J	13 U	0.09 J	12 U	0.15 J	0.32 J	11 U	0.19 J	0.18 J	11 U	0.04 J	10 U	0.22 J	13 U	8.4 U	11 U	0.11 J	0.21 J
Copper	9.7 U	6.2 U	6.4 U	4.6 U	5.9 U	6.4 U	4.9 U	5.7 U	8.9 U	7 U	5.4 U	5.2 U	5 U	5.1 U	6.5 U	4.2 U	5.4 U	5.6 U	4.3 U
Iron	610	789	305	478 J	767	840	1,820	725	407 J	360 J	266	606	858	1,010	322	420	499	766	877
Lead	4	7.8	6.6	4	3.8	5.4	9.8	5	10.2	8.6	2.6	4.4	7.5	12.5	7.9	2.9	2.8	5.9	6.6
Manganese	73.2	28.4	16.7	11.8	23.3	94.8	83.3	4.9	39.3	38.6	7	12.4	61.3	27.8	7.1	15.7	9.9	41.9	31.6
Mercury	0.06 J	0.05 J	0.03 J	0.01 J	0.19 U	0.02 J	0.03 J	0.01 J	0.06 J	0.05 J	0.19 U	0.01 J	0.02 J	0.04 J	0.03 J	0.01 J	0.19 U	0.02 J	0.02 J
Nickel	16 U	9.9 U	0.6 J	7.4 U	9.5 U	10 U	7.8 U	0.36 J	14 U	11 U	0.23 J	8.4 U	1.1 J	8.2 U	0.72 J	0.43 J	8.6 U	0.96 J	6.9 U
Potassium	1,900 U	1,200 U	1,300 U	65.6 J	1,200 U	1,300 U	980 U	1,100 U	135 J	122 J	1,100 U	1,000 U	1,000 U	1,000 U	1,300 U	840 U	1,100 U	1,100 U	870 U
Selenium	1.9 U	0.15 J	1.3 U	0.15 J	1.2 U	1.3 U	0.16 J	1.1 U	0.31 J	0.32 J	1.1 U	1 U	1 U	0.21 J	1.3 U	0.1 J	0.12 J	0.14 J	0.87 U
Silver	3.9 U	2.5 U	2.6 U	1.9 U	2.4 U	2.5 U	2 U	2.3 U	3.6 U	2.8 U	2.2 U	2.1 U	2 U	2 U	2.6 U	1.7 U	2.2 U	2.2 U	1.7 U
Sodium	1,900 U	1,200 U	111 J	930 UJ	1,200 U	1,300 U	980 U	80.8 J	1,800 UJ	1,400 UJ	88.5 J	1,000 U	6.6 J	1,000 U	115 J	68.1 J	1,100 U	15.4 J	870 U
Vanadium	19 U	12 U	1.3 J	2.1 J	1.9 J	3 J	4.7 J	2.3 J	2.3 J	2 J	1 J	10 U	2.4 J	3.8 J	1.6 J	1.4 J	1.6 J	2.2 J	2.9 J
Zinc	11	4.9 U	5.7	3.7 U	3.3 J	5.9	7	4.6 U	10.8	10.4	4.3 U	4.2 U	6.9	8.8	5.2 U	3.9	4.3 U	6	6.6

Notes:

Shading indicates exceedance of two times the mean base background concentration for surface soil

Bold box indicates exceedance of NC SSLs

Bold text indicates exceedance of Adjusted Industrial Soil RSLs

Underline indicates exceedance of Adjusted Residential Soil RSLs

RSLs were adjusted for noncarcinogens to account for exposure to multiple constituents

NA - Not analyzed

J - Analyte present, value may or may not be accurate or precise

U - The material was analyzed for, but not detected

UJ - Analyte not detected, quantitation limit may be inaccurate

mg/kg - Milligrams per kilogram

µg/kg - Micrograms per kilogram

TABLE A1-1a
UXO-02 Surface Soil Analytical Results
Site UXO-02, Unnamed Explosive Contaminated Ra
PA/SI Report
MCIEAST-MCB CAMLEJ, North Carolina

Station ID	MR02-SS81		MR02-SS82	MR02-SS83	MR02-SS84	MR02-SS85	MR02-SS86	MR02-SS87	MR02-SS88	MR02-SS89	MR02-SS90	MR02-SS91		MR02-SS92	MR02-SS93	MR02-SS94	MR02-SS95	MR02-SS96	MR02-SS97
Sample ID	MR02-SS81-10A	MR02-SS81D-10A	MR02-SS82-10A	MR02-SS83-10A	MR02-SS84-10A	MR02-SS85-10A	MR02-SS86-10A	MR02-SS87-10A	MR02-SS88-10A	MR02-SS89-10A	MR02-SS90-10A	MR02-SS91-10A	MR02-SS91D-10A	MR02-SS92-10A	MR02-SS93-10A	MR02-SS94-10A	MR02-SS95-10A	MR02-SS96-10A	MR02-SS97-10A
Sample Date	02/03/10	02/03/10	02/03/10	02/03/10	02/03/10	02/03/10	02/03/10	02/03/10	02/03/10	02/03/10	02/03/10	02/03/10	02/03/10	02/03/10	02/03/10	02/04/10	02/02/10	02/04/10	02/04/10
Chemical Name																			
Semivolatile Organic Compounds (µg/kg)																			
No Detections																			
Explosives (µg/kg)																			
No Detections																			
Total Metals (mg/kg)																			
Aluminum	988	917	967 J	703	2,230	2,360	4,490	1,470 J	1,470	1,960	3,310	3,970	4,180	12,200	9,120	1,610 J	398 J	982 J	2,720 J
Antimony	2.8 UJ	2.8 UJ	3 U	2.4 UJ	2.5 UJ	2.2 U	2.3 UJ	2 U	2.3 UJ	0.1 J	2.1 UJ	2 UJ	2.1 UJ	2.4 UJ	2.6 UJ	1.8 U	2 UJ	2.2 U	2.6 U
Arsenic	1	0.71	0.76 U	0.59 U	0.62 U	0.56 U	1	0.5 U	0.57 U	0.59	0.72	0.68	0.67	1.6	**2.8**	0.23 J	0.51 UJ	0.49 J	0.35 J
Barium	20.8 J	19.4 J	61 U	8.2 J	11.3 J	8.1 J	15.8 J	40 U	12.7 J	6.2 J	14 J	10.7 J	11.5 J	58	20.1 J	37 U	2.8 J	44 U	52 U
Beryllium	1.4 U	1.4 U	1.5 U	1.2 U	1.2 U	1.1 U	1.1 U	0.99 U	1.1 U	0.98 U	1 U	1 U	1 U	1.2 U	1.3 U	0.03 J	1 U	0.01 J	0.02 J
Cadmium	0.98 U	0.97 U	1.1 U	0.82 U	0.03 J	0.78 U	0.8 U	0.69 U	0.8 U	0.68 U	0.73 U	0.02 J	0.72 U	0.08 J	0.9 U	0.65 U	0.72 U	0.77 U	0.92 U
Calcium	1,830 J	1,700 J	1,500 UJ	1,200 U	1,200 U	1,100 U	1,100 U	990 UJ	1,100 U	980 U	1,000 U	1,000 U	1,000 U	1,800	1,300 U	930 UJ	1,000 UJ	1,100 UJ	1,300 UJ
Chromium	2.8 U	1.2 J	1.1 J	0.88 J	1.2 J	2.2 U	2.8 J	1.6 J	1.3 J	1.3 J	2.9	2 J	2.1 J	**6 J**	**11.4 J**	1.4 J	2 U	1 J	2.1 J
Cobalt	14 U	14 U	0.17 J	12 U	0.12 J	0.1 J	0.32 J	0.2 J	11 U	9.8 U	10 U	0.26 J	0.27 J	2 J	0.5 J	9.3 U	10 U	0.07 J	13 U
Copper	7 U	7 U	7.6 U	5.9 U	6.2 U	5.6 U	5.7 U	5 U	5.7 U	4.9 U	5.2 U	5.1 U	5.2 U	6 U	6.4 U	4.6 U	5.1 U	5.5 U	6.5 U
Iron	467	444	454 J	408	693	711	1,790	581 J	599	755	1,280	1,040	1,090	3,670	5,980	708 J	535	561 J	784 J
Lead	8.3	8	5	3.5	5.7	5.3	8.5	6.7	6.9	5.3	6.8	7.4	6.8	17.6	6.5	3.5	2.3	4.6	5.8
Manganese	50.6	38.8	23.1	63.9	43.4	17.1	19.2	13	31.3	16.5	34.8	25.7	30.7	204	16.9	28	7.3	53.9	33.6
Mercury	0.07 J	0.06 J	0.05 J	0.02 J	0.01 J	0.02 J	0.02 J	0.02 J	0.02 J	0.01 J	0.01 J	0.02 J	0.01 J	0.09 J	0.01 J	0.18 U	0.15 U	0.2 U	0.01 J
Nickel	1.3 J	1.4 J	12 U	0.54 J	10 U	8.9 U	9.1 U	7.9 U	0.62 J	0.58 J	1.2 J	8.2 U	8.3 U	9.7 U	10 U	7.4 U	8.2 U	8.8 U	10 U
Potassium	1,400 U	1,400 U	136 J	1,200 U	1,200 U	1,100 U	1,100 U	132 J	1,100 U	980 U	1,000 U	1,000 U	1,000 U	1,200 U	1,300 U	930 U	1,000 U	1,100 U	1,300 U
Selenium	0.22 J	0.25 J	0.23 J	1.2 U	1.2 U	1.1 U	0.22 J	0.15 J	1.1 U	0.98 U	0.12 J	0.16 J	1 U	0.5 J	0.27 J	0.11 J	1 U	0.16 J	0.16 J
Silver	2.8 U	2.8 U	3 U	2.4 U	2.5 U	2.2 U	2.3 U	2 U	2.3 U	2 U	2.1 U	2 U	2.1 U	2.4 U	2.6 U	1.8 U	2 U	2.2 U	2.6 U
Sodium	131 J	168 J	1,500 UJ	94.1 J	1,200 U	1,100 U	1,100 U	990 UJ	91.8 J	62.7 J	53.1 J	1,000 U	1,000 U	1,200 U	1,300 U	930 UJ	1,000 U	1,100 UJ	1,300 UJ
Vanadium	2 J	2 J	2 J	1.3 J	2.1 J	11 U	5 J	2.6 J	1.9 J	2 J	4.2 J	2.8 J	2.9 J	10.4 J	15	1.9 J	1.2 J	1.6 J	3.1 J
Zinc	7	6.2	6.3	5.6	5.7	6.2	5.2	17.5	4.6 U	3.9 U	4.4	4.8	5.2	16.9	10	4.6	4.1 U	4.4 U	5.2 U

Notes:

Shading indicates exceedance of two times the mean base background concentration for surface soil

Bold box indicates exceedance of NC SSLs

Bold text indicates exceedance of Adjusted Industrial Soil RSLs

Underline indicates exceedance of Adjusted Residential Soil RSLs

RSLs were adjusted for noncarcinogens to account for exposure to multiple constituents

NA - Not analyzed

J - Analyte present, value may or may not be accurate or precise

U - The material was analyzed for, but not detected

UJ - Analyte not detected, quantitation limit may be inaccurate

mg/kg - Milligrams per kilogram

µg/kg - Micrograms per kilogram

TABLE A1-1a
UXO-02 Surface Soil Analytical Results
Site UXO-02, Unnamed Explosive Contaminated Ra
PA/SI Report
MCIEAST-MCB CAMLEJ, North Carolina

Station ID	MR02-SS98	MR02-SS99	MR02-SS100	MR02-SS101		MR02-SS102	MR02-SS103	MR02-SS104	MR02-SS105	MR02-SS106	MR02-SS107	MR02-SS108	MR02-SS109	MR02-SS110	MR02-SS111		MR02-SS112
Sample ID	MR02-SS98-10A	MR02-SS99-10A	MR02-SS100-10A	MR02-SS101-10A	MR02-SS101D-10A	MR02-SS102-10A	MR02-SS103-10A	MR02-SS104-10A	MR02-SS105-10A	MR02-SS106-10A	MR02-SS107-10A	MR02-SS108-10A	MR02-SS109-10A	MR02-SS110-10A	MR02-SS111-10A	MR02-SS111D-10A	MR02-SS112-10A
Sample Date	02/02/10	02/02/10	02/02/10	02/04/10	02/04/10	02/04/10	02/04/10	02/02/10	02/02/10	02/02/10	02/04/10	02/04/10	02/04/10	02/04/10	02/02/10	02/02/10	02/02/10
Chemical Name																	
Semivolatile Organic Compounds (µg/kg)																	
No Detections																	
Explosives (µg/kg)																	
No Detections																	
Total Metals (mg/kg)																	
Aluminum	1,280 J	913 J	2,760 J	1,110 J	1,040 J	8,000	4,880	1,970	798	2,270	2,540	3,530 J	7,960 J	1,680 J	588	578	547
Antimony	2.1 UJ	1.7 UJ	2 UJ	1.5 U	2.1 U	3 UJ	1.5 UJ	3.3 UJ	2.5 UJ	1.9 UJ	2.2 UJ	2 U	2.8 U	2.2 U	1.5 UJ	1.6 UJ	1.9 UJ
Arsenic	0.3 J	0.26 J	0.3 J	0.26 J	0.21 J	1.3	0.47	0.64 J	0.46 J	0.64	0.35 J	0.57	0.65 J	0.34 J	0.21 J	0.2 J	0.2 J
Barium	4.8 J	2.8 J	11.5 J	31 U	42 U	59 U	30 U	14.9 J	6.7 J	14.4 J	44 U	41 U	56 U	44 U	8.8 J	9.1 J	9.9 J
Beryllium	1.1 U	0.87 U	1 U	0.01 J	1 U	0.16 J	0.06 J	1.6 U	1.2 U	0.96 U	0.03 J	0.04 J	0.13 J	0.02 J	0.75 U	0.79 U	0.96 U
Cadmium	0.75 U	0.61 U	0.71 U	0.54 U	0.74 U	1 U	0.54 U	0.03 J	0.02 J	0.03 J	0.78 U	0.71 U	0.98 U	0.77 U	0.01 J	0.01 J	0.02 J
Calcium	1,100 UJ	870 UJ	1,000 UJ	770 UJ	1,000 UJ	1,500 UJ	760 UJ	1,600 U	1,200 U	960 U	1,100 UJ	1,000 UJ	1,400 UJ	1,100 UJ	750 U	790 U	960 U
Chromium	2.1 U	1.7 U	2.1	1.1 J	1 J	5	2.8	2.2 J	1.2 J	1.7 J	2.2 U	3.6	4.6	1.7 J	0.91 J	0.91 J	0.99 J
Cobalt	0.03 J	0.04 J	0.08 J	7.7 U	10 U	15 U	7.6 U	0.14 J	0.09 J	0.15 J	11 U	10 U	14 U	11 U	0.1 J	0.1 J	0.1 J
Copper	5.4 U	4.3 U	5.1 U	3.8 U	5.3 U	7.4 U	3.8 U	8.2 U	6.2 U	4.8 U	5.5 U	5.1 U	7 U	5.5 U	3.7 U	3.9 U	4.8 U
Iron	912	805	782	403 J	375 J	2,760	1,200	1,200	395	863	949	1,300 J	1,820 J	883 J	330	331	442
Lead	5.7	6	4.8	2.9	3.2	17.7	6	4.8	4.6	6.3	6.1	6.3	8.2	4.6	4.6	5	4.7
Manganese	37.6	11.5	17.4	12.2	13.5	45.9	57.9	28.6 J	12.6 J	31.4 J	23.8	19.5	36.3	20.1	21.9 J	21.1 J	27.3 J
Mercury	0.01 J	0.01 J	0.01 J	0.18 U	0.01 J	0.05 J	0.02 J	0.02 J	0.02 J	0.02 J	0.02 J	0.02 J	0.03 J	0.01 J	0.18 U	0.16 U	0.02 J
Nickel	8.6 U	0.31 J	0.72 J	6.2 U	8.4 U	12 U	6.1 U	0.74 J	0.48 J	0.71 J	8.9 U	8.2 U	11 U	8.8 U	0.19 J	0.19 J	0.36 J
Potassium	1,100 U	870 U	1,000 U	770 U	1,000 U	1,500 U	760 U	1,600 U	1,200 U	960 U	1,100 U	1,000 U	1,400 U	1,100 U	750 U	790 U	960 U
Selenium	1.1 U	0.87 U	1 U	0.1 J	0.13 J	0.56 J	0.19 J	1.6 U	1.2 U	0.96 U	0.19 J	0.21 J	0.41 J	0.18 J	0.75 U	0.79 U	0.96 U
Silver	2.1 U	1.7 U	2 U	1.5 U	2.1 U	3 U	1.5 U	3.3 U	2.5 U	1.9 U	2.2 U	2 U	2.8 U	2.2 U	1.5 U	1.6 U	1.9 U
Sodium	1,100 U	870 U	1,000 U	770 UJ	1,000 UJ	1,500 U	760 U	1,600 U	1,200 U	960 U	1,100 U	1,000 UJ	1,400 UJ	1,100 UJ	750 U	790 U	960 U
Vanadium	2.9 J	2.5 J	2.8 J	1.6 J	1.5 J	9 J	3.9 J	3.6 J	2 J	2.8 J	3.2 J	5.6 J	6.5 J	2.6 J	1.5 J	1.5 J	1.9 J
Zinc	4.3 U	3.5 U	4.1 U	3.1 U	4.2 U	10.7	7	6.7	4.9 U	5	4.4 U	5.3	8.2	4.4 U	3 U	3.2 U	3.8 U

Notes:

Shading indicates exceedance of two times the mean base background concentration for surface soil

Bold box indicates exceedance of NC SSLs

Bold text indicates exceedance of Adjusted Industrial Soil RSLs

Underline indicates exceedance of Adjusted Residential Soil RSLs

RSLs were adjusted for noncarcinogens to account for exposure to multiple constituents

NA - Not analyzed

J - Analyte present, value may or may not be accurate or precise

U - The material was analyzed for, but not detected

UJ - Analyte not detected, quantitation limit may be inaccurate

mg/kg - Milligrams per kilogram

µg/kg - Micrograms per kilogram

TABLE A1-1a
UXO-02 Surface Soil Analytical Results
Site UXO-02, Unnamed Explosive Contaminated Ra
PA/SI Report
MCIEAST-MCB CAMLEJ, North Carolina

Station ID	MR02-SS113	MR02-SS114
Sample ID	MR02-SS113-10A	MR02-SS114-10A
Sample Date	02/02/10	02/02/10
Chemical Name		
Semivolatile Organic Compounds (µg/kg)		
No Detections		
Explosives (µg/kg)		
No Detections		
Total Metals (mg/kg)		
Aluminum	1,340 J	7,330 J
Antimony	2.3 UJ	2.1 UJ
Arsenic	0.18 J	0.67
Barium	7.6 J	17.6 J
Beryllium	1.2 U	1.1 U
Cadmium	0.81 U	0.74 U
Calcium	1,200 UJ	1,100 U
Chromium	2.3 U	3.2
Cobalt	0.06 J	11 U
Copper	5.8 U	5.3 U
Iron	606	1,550
Lead	5.2	8.6
Manganese	21.3	18.7
Mercury	0.03 J	0.04 J
Nickel	9.3 U	8.5 UJ
Potassium	1,200 U	1,100 U
Selenium	1.2 U	0.3 J
Silver	2.3 U	2.1 U
Sodium	1,200 U	1,100 U
Vanadium	1.9 J	11 U
Zinc	4.6 U	8.2

Notes:

Shading indicates exceedance of two times the mean base background concentration for surface soil

Bold box indicates exceedance of NC SSLs

Bold text indicates exceedance of Adjusted Industrial Soil RSLs

Underline indicates exceedance of Adjusted Residential Soil RSLs

RSLs were adjusted for noncarcinogens to account for exposure to multiple constituents

NA - Not analyzed

J - Analyte present, value may or may not be accurate or precise

U - The material was analyzed for, but not detected

UJ - Analyte not detected, quantitation limit may be inaccurate

mg/kg - Milligrams per kilogram

µg/kg - Micrograms per kilogram

TABLE A1-1b
UXO-02 Surface Soil Analytical Results
Site UXO-02, Unnamed Explosive Contaminated Range
PA/SI Report
MCIEAST-MCB CAMLEJ, North Carolina

Station ID	**Camp Lejeune Background SS 2X Mean**	**NCSSLs (January, 2010)**	**Adjusted Industrial Soil RSLs (May, 2010)**	**Adjusted Residential Soil RSLs (May, 2010)**	MR02-SS115	MR02-SS116	MR02-SS117	MR02-SS118	MR02-SS119	MR02-SS120	MR02-SS121		MR02-SS122	MR02-SS123	MR02-SS124	MR02-SS125	MR02-SS126
Sample ID					MR02-SS115-10A	MR02-SS116-10A	MR02-SS117-10A	MR02-SS118-10A	MR02-SS119-10A	MR02-SS120-10A	MR02-SS121-10A	MR02-SS121D-10A	MR02-SS122-10A	MR02-SS123-10A	MR02-SS124-10A	MR02-SS125-10A	MR02-SS126-10A
Sample Date					02/04/10	02/04/10	02/04/10	02/04/10	02/02/10	02/02/10	02/02/10	02/02/10	02/02/10	02/02/10	02/02/10	02/04/10	02/02/10
Chemical Name																	
Semivolatile Organic Compounds (µg/kg)																	
No Detections																	
Explosives (µg/kg)																	
No Detections																	
Total Metals (mg/kg)																	
Aluminum	5,487	--	99,000	7,700	3,160 J	3,380 J	8,440 J	2,750 J	650 J	901	757	692	2,320 J	4,570 J	2,010 J	4,470 J	456 J
Antimony	0.447	--	41	3.1	2.2 U	2.4 U	0.14 J	2 U	2 UJ	1.8 UJ	2.1 UJ	3.2 J	2.1 UJ	2.1 UJ	1.7 UJ	2.7 U	2 UJ
Arsenic	0.626	5.8	1.6	0.39	0.8	0.35 J	0.57 J	0.16 J	0.2 J	0.27 J	0.42 J	0.31 J	0.28 J	0.55	0.33 J	0.56 J	0.3 J
Barium	14.5	580	19,000	1,500	45 U	47 U	48 U	39 U	5.5 J	2.8 J	5.8 J	5.2 J	12.2 J	33.9 J	10 J	54 U	15.7 J
Beryllium	0.103	--	200	16	0.06 J	0.06 J	0.16 J	0.1 J	0.99 U	0.92 U	1 U	0.82 U	1 U	1.1 U	0.86 U	0.03 J	1 U
Cadmium	0.033	3	80	7	0.79 U	0.82 U	0.84 U	0.68 U	0.69 U	0.65 U	0.72 U	0.58 U	0.73 U	0.74 U	0.6 U	0.94 U	0.7 U
Calcium	6,360	--	--	--	1,100 UJ	1,200 UJ	1,200 UJ	980 UJ	990 U	920 U	1,000 U	820 U	1,000 UJ	2,330	860 UJ	1,300 UJ	1,000 U
Chromium	6.05	3.8	5.6	0.29	2.6	2.4	4.9	1.7 J	2 U	1 J	1.1 J	1 J	2.1 U	2.4	1.8	3.2	2 U
Cobalt	0.294	--	30	2.3	0.22 J	12 U	1.5 J	9.8 U	9.9 U	0.06 J	0.06 J	0.06 J	0.1 J	11 U	0.14 J	13 U	10 U
Copper	4.83	700	4,100	310	5.6 U	5.9 U	6 U	4.9 U	4.9 U	4.6 U	5.2 U	4.1 U	5.2 U	5.3 U	4.3 U	6.7 U	5 U
Iron	3,245	150	72,000	5,500	2,390 J	1,090 J	2,040 J	856 J	470	756	561	497	946	1,100	915	1,680 J	306
Lead	12.3	270	800	400	7.1	9.2	12.8	6.5	3.8	2.4	3	2.8	5.8	8.2	6.1	7.2	7.1
Manganese	13.7	65	2,300	180	41.3	79.5	60.5	157	15.6	20.7 J	29.6 J	23.8 J	103	84.2	38.4	64.7	19.8
Mercury	0.081	1	31	2.3	0.02 J	0.04 J	0.04 J	0.03 J	0.21 U	0.18 U	0.17 U	0.18 U	0.02 J	0.04 J	0.03 J	0.02 J	0.19 U
Nickel	1.21	130	2,000	150	9 U	9.4 U	9.6 U	7.8 U	7.9 UJ	0.24 J	0.23 J	0.25 J	8.4 U	8.5 UJ	1 J	11 U	8 UJ
Potassium	116	--	--	--	1,100 U	1,200 U	1,200 U	980 U	990 U	920 U	1,000 U	820 U	1,000 U	1,100 U	860 U	1,300 U	1,000 U
Selenium	0.563	2.1	510	39	0.24 J	0.28 J	0.33 J	0.17 J	0.14 J	0.92 U	1 U	0.82 U	1 U	0.2 J	0.86 U	0.27 J	0.13 J
Silver	0.14	3.4	510	39	2.2 U	2.4 U	2.4 U	2 U	2 U	1.8 U	2.1 U	1.6 U	2.1 U	2.1 U	1.7 U	2.7 U	2 U
Sodium	80.9	--	--	--	1,100 UJ	1,200 UJ	1,200 UJ	980 UJ	990 U	920 U	1,000 U	820 U	1,000 U	1,100 U	860 U	1,300 UJ	1,000 U
Vanadium	8.9	--	520	39	6 J	4 J	7.6 J	2.5 J	1.8 J	2.5 J	2.2 J	1.9 J	2.5 J	11 U	3 J	5.4 J	1.5 J
Zinc	10.8	1,200	31,000	2,300	5.7	12	14.1	10.2	4.9	3.7 U	4.1 U	3.3 U	5.4	8.4	6.9	7.5	4.5

Notes:

Shading indicates exceedance of two times the mean base background concentration for surface soil

Bold box indicates exceedance of NC SSLs

Bold text indicates exceedance of Adjusted Industrial Soil RSLs

Underline indicates exceedance of Adjusted Residential Soil RSLs

RSLs were adjusted for noncarcinogens to account for exposure to multiple constituents

NA - Not analyzed

J - Analyte present, value may or may not be accurate or precise

U - The material was analyzed for, but not detected

UJ - Analyte not detected, quantitation limit may be inaccurate

mg/kg - Milligrams per kilogram

µg/kg - Micrograms per kilogram

TABLE A1-1b
UXO-02 Surface Soil Analytical Results
Site UXO-02, Unnamed Explosive Contaminated Range
PA/SI Report
MCIEAST-MCB CAMLEJ, North Carolina

Station ID	**Camp Lejeune Background SS 2X Mean**	**NCSSLs (January, 2010)**	**Adjusted Industrial Soil RSLs (May, 2010)**	**Adjusted Residential Soil RSLs (May, 2010)**	MR02-SS127	MR02-SS128	MR02-SS129	MR02-SS130	MR02-SS131		MR02-SS132	MR02-SS133	MR02-SS134	MR02-SS135	MR02-SS136	MR02-SS137	MR02-SS138
Sample ID					MR02-SS127-10A	MR02-SS128-10A	MR02-SS129-10A	MR02-SS130-10A	MR02-SS131-10A	MR02-SS131D-10A	MR02-SS132-10A	MR02-SS133-10A	MR02-SS134-10A	MR02-SS135-10A	MR02-SS136-10A	MR02-SS137-10A	MR02-SS138-10A
Sample Date					02/02/10	02/02/10	02/02/10	02/01/10	02/01/10	02/01/10	02/02/10	02/02/10	02/04/10	02/02/10	02/02/10	02/02/10	02/01/10
Chemical Name																	
Semivolatile Organic Compounds (µg/kg)																	
No Detections																	
Explosives (µg/kg)																	
No Detections																	
Total Metals (mg/kg)																	
Aluminum	5,487	--	99,000	7,700	367	775 J	2,980 J	11,300	3,430 J	3,130 J	3,100 J	1,580 J	1,490	1,120 J	979	1,670 J	1,730 J
Antimony	0.447	--	41	3.1	2 UJ	2 UJ	2.3 UJ	2.2 UJ	2.2 UJ	1.9 UJ	2.3 UJ	2.4 UJ	2.3 UJ	1.8 UJ	2.1 UJ	1.6 UJ	2 UJ
Arsenic	0.626	5.8	1.6	0.39	0.22 J	0.5 UJ	0.33 J	0.9 J	0.28 J	0.27 J	0.37 J	0.26 J	0.48 J	0.46 J	0.32 J	0.5 J	0.5 U
Barium	14.5	580	19,000	1,500	11.5 J	7.1 J	36.9 J	47.4	18.8 J	17.5 J	25 J	8 J	45 U	5.3 J	12.9 J	12.5 J	40 U
Beryllium	0.103	--	200	16	1 U	0.99 U	1.1 U	1.1 U	0.08 J	0.08 J	1.2 U	1.2 U	1.1 U	0.93 U	1 U	0.81 U	0.01 J
Cadmium	0.033	3	80	7	0.71 U	0.69 U	0.02 J	0.76 U	0.79 U	0.68 U	0.82 U	0.85 U	0.79 U	0.65 U	0.02 J	0.02 J	0.71 U
Calcium	6,360	--	--	--	1,000 U	990 UJ	2,460 J	1,100 U	1,100 UJ	970 UJ	1,200 U	1,200 U	1,100 UJ	930 UJ	1,000 U	810 UJ	1,000 U
Chromium	6.05	3.8	5.6	0.29	0.62 J	2 U	2.3 U	**6.1**	2 J	1.9	2.3 U	2.4 U	2.3 U	1.8 U	1 J	1.6 U	1.1 J
Cobalt	0.294	--	30	2.3	0.06 J	0.06 J	0.12 J	0.82 J	0.18 J	0.19 J	12 U	12 U	11 U	0.06 J	0.1 J	0.16 J	0.14 J
Copper	4.83	700	4,100	310	5 U	5 U	5.7 U	5.4 U	5.6 U	4.8 U	5.9 U	6.1 U	5.7 U	4.6 U	5.2 U	4.1 U	5 U
Iron	3,245	150	72,000	5,500	262	306	775	3,130	895	835	1,000	915	1,240	1,010	462	635	563
Lead	12.3	270	800	400	5.2	4.6	6.4	12.5	6.2	6.1	8.2	6.7	3.5	6.5	5.8	5.8	5.2
Manganese	13.7	65	2,300	180	8.7 J	37.3	82.5	30.3	69.4	67.7	74.8	31	21.8	11.2	8.7 J	17	31.7
Mercury	0.081	1	31	2.3	0.14 U	0.02 J	0.02 J	0.02 J	0.03 J	0.02 J	0.04 J	0.05 J	0.18 U	0.02 J	0.02 J	0.02 J	0.02 J
Nickel	1.21	130	2,000	150	0.19 J	0.36 J	9.1 U	8.7 U	1.1 J	1.1 J	9.4 UJ	9.7 UJ	9.1 U	7.4 U	0.38 J	6.5 U	0.52 J
Potassium	116	--	--	--	1,000 U	990 U	1,100 U	1,100 U	1,100 U	970 U	1,200 U	1,200 U	1,100 U	930 U	1,000 U	810 U	56.5 J
Selenium	0.563	2.1	510	39	1 U	0.99 U	1.1 U	0.44 J	0.13 J	0.97 U	0.23 J	1.2 U	0.15 J	0.93 U	1 U	0.13 J	1 U
Silver	0.14	3.4	510	39	2 U	2 U	2.3 U	2.2 U	2.2 U	1.9 U	2.3 U	2.4 U	2.3 U	1.8 U	2.1 U	1.6 U	2 U
Sodium	80.9	--	--	--	1,000 U	990 U	1,100 U	1,100 U	1,100 U	970 U	1,200 U	1,200 U	1,100 U	930 U	1,000 U	810 U	1,000 U
Vanadium	8.9	--	520	39	1.3 J	1.3 J	2.3 J	11 U	2.7 J	2.6 J	12 U	12 U	3.5 J	3.8 J	1.7 J	2.1 J	1.8 J
Zinc	10.8	1,200	31,000	2,300	5.7	4 U	8.8	28.2	7.1	6.9	7.8	5.5	4.5 U	6.6	11.6	3.2 U	4 U

Notes:

Shading indicates exceedance of two times the mean base background concentration for surface soil

Bold box indicates exceedance of NC SSLs

Bold text indicates exceedance of Adjusted Industrial Soil RSLs

Underline indicates exceedance of Adjusted Residential Soil RSLs

RSLs were adjusted for noncarcinogens to account for exposure to multiple constituents

NA - Not analyzed

J - Analyte present, value may or may not be accurate or precise

U - The material was analyzed for, but not detected

UJ - Analyte not detected, quantitation limit may be inaccurate

mg/kg - Milligrams per kilogram

µg/kg - Micrograms per kilogram

TABLE A1-1b
UXO-02 Surface Soil Analytical Results
Site UXO-02, Unnamed Explosive Contaminated Range
PA/SI Report
MCIEAST-MCB CAMLEJ, North Carolina

Station ID	**Camp Lejeune Background SS 2X Mean**	**NCSSLs (January, 2010)**	**Adjusted Industrial Soil RSLs (May, 2010)**	**Adjusted Residential Soil RSLs (May, 2010)**	MR02-SS139	MR02-SS140	MR02-SS141		MR02-SS142	MR02-SS143	MR02-SS144	MR02-SS145	MR02-SS146	MR02-SS147	MR02-SS148	MR02-SS149	MR02-SS150
Sample ID					MR02-SS139-10A	MR02-SS140-10A	MR02-SS141-10A	MR02-SS141D-10A	MR02-SS142-10A	MR02-SS143-10A	MR02-SS144-10A	MR02-SS145-10A	MR02-SS146-10A	MR02-SS147-10A	MR02-SS148-10A	MR02-SS149-10A	MR02-SS150-10A
Sample Date					02/01/10	02/01/10	02/01/10	02/01/10	02/01/10	02/02/10	02/02/10	02/02/10	02/02/10	02/02/10	02/02/10	02/01/10	02/01/10
Chemical Name																	
Semivolatile Organic Compounds (µg/kg)																	
No Detections																	
Explosives (µg/kg)																	
No Detections																	
Total Metals (mg/kg)																	
Aluminum	5,487	--	99,000	7,700	10,200	3,590 J	1,870 J	1,820 J	1,800 J	2,360 J	1,700 J	743 J	833 J	977 J	2,730 J	4,440 J	1,190 J
Antimony	0.447	--	41	3.1	2.1 UJ	2.4 UJ	1.9 UJ	1.7 UJ	2 UJ	1.5 UJ	1.8 UJ	1.5 UJ	3.4 UJ	1.8 UJ	2 UJ	3.6 UJ	2.2 UJ
Arsenic	0.626	5.8	1.6	0.39	0.69 J	0.65	0.34 J	0.3 J	0.25 J	0.26 J	0.34 J	0.26 J	0.35 J	0.27 J	0.29 J	0.61 J	0.56 U
Barium	14.5	580	19,000	1,500	43.4	39.5 J	7.9 J	7.7 J	24.1 J	6.2 J	7.3 J	5.3 J	45.9 J	10.9 J	12.6 J	92.6	18.2 J
Beryllium	0.103	--	200	16	1.1 U	0.08 J	0.04 J	0.03 J	0.11 J	0.74 U	0.91 U	0.75 U	1.7 U	0.92 U	0.99 U	0.05 J	0.02 J
Cadmium	0.033	3	80	7	0.75 U	0.84 U	0.66 U	0.6 U	0.69 U	0.52 U	0.64 U	0.52 U	0.04 J	0.64 U	0.02 J	1.3 U	0.79 U
Calcium	6,360	--	--	--	1,100 U	1,240	950 UJ	850 UJ	990 UJ	740 U	910 U	750 UJ	1,700 UJ	920 U	990 UJ	4,240 J	1,100 U
Chromium	6.05	3.8	5.6	0.29	5.6	2.9	2.1	2.1	1.3 J	1.5 U	1.8 U	1.5 U	3.4 U	1.8 U	2 U	5.2	0.92 J
Cobalt	0.294	--	30	2.3	0.78 J	0.23 J	0.12 J	0.11 J	0.09 J	7.4 U	9.1 U	7.5 U	0.08 J	9.2 U	0.14 J	0.24 J	0.07 J
Copper	4.83	700	4,100	310	5.4 U	6 U	4.7 U	4.3 U	5 U	3.7 U	4.6 U	3.8 U	8.4 U	4.6 U	4.9 U	9 U	5.6 U
Iron	3,245	150	72,000	5,500	2,840	1,530	853	815	578	965	843	669	435	560	672	1,840	383
Lead	12.3	270	800	400	11.1	8.4	6.1	5.7	6.4	3.9	7.9	11.8	9	4.4	6.6	5.9	3.3
Manganese	13.7	65	2,300	180	30.1	134	19.6	15	62.1	34.4	43.5	7.2	27	22.2	63.1	594	69.2
Mercury	0.081	1	31	2.3	0.02 J	0.05 J	0.02 J	0.02 J	0.03 J	0.02 J	0.03 J	0.02 J	0.04 J	0.21 U	0.03 J	0.05 J	0.04 J
Nickel	1.21	130	2,000	150	8.6 U	1.2 J	0.66 J	0.68 J	0.84 J	5.9 UJ	7.3 UJ	6 U	13 U	7.4 UJ	7.9 U	1.4 J	0.43 J
Potassium	116	--	--	--	1,100 U	192 J	950 U	850 U	990 U	740 U	910 U	750 U	1,700 U	920 U	990 U	1,800 U	140 J
Selenium	0.563	2.1	510	39	0.38 J	1.2 U	0.95 U	0.85 U	0.13 J	0.11 J	0.91 U	0.13 J	0.26 J	0.92 U	0.14 J	1.8 U	1.1 U
Silver	0.14	3.4	510	39	2.1 U	2.4 U	1.9 U	1.7 U	2 U	1.5 U	1.8 U	1.5 U	3.4 U	1.8 U	2 U	3.6 U	2.2 U
Sodium	80.9	--	--	--	1,100 U	1,200 U	950 U	850 U	990 U	740 U	910 U	750 U	1,700 U	920 U	990 U	1,800 U	1,100 U
Vanadium	8.9	--	520	39	11 U	4.8 J	3.2 J	3.1 J	1.8 J	1.9 J	9.1 U	1.8 J	1.7 J	2.3 J	2 J	6.3 J	1.5 J
Zinc	10.8	1,200	31,000	2,300	25	14.2	3.3 J	3 J	6.3	3 U	4.1	3 U	7.9	4	6.1	30.3	5.2

Notes:

Shading indicates exceedance of two times the mean base background concentration for surface soil

Bold box indicates exceedance of NC SSLs

Bold text indicates exceedance of Adjusted Industrial Soil RSLs

Underline indicates exceedance of Adjusted Residential Soil RSLs

RSLs were adjusted for noncarcinogens to account for exposure to multiple constituents

NA - Not analyzed

J - Analyte present, value may or may not be accurate or precise

U - The material was analyzed for, but not detected

UJ - Analyte not detected, quantitation limit may be inaccurate

mg/kg - Milligrams per kilogram

µg/kg - Micrograms per kilogram

TABLE A1-1b
UXO-02 Surface Soil Analytical Results
Site UXO-02, Unnamed Explosive Contaminated Range
PA/SI Report
MCIEAST-MCB CAMLEJ, North Carolina

Station ID	**Camp Lejeune Background SS 2X Mean**	**NCSSLs (January, 2010)**	**Adjusted Industrial Soil RSLs (May, 2010)**	**Adjusted Residential Soil RSLs (May, 2010)**	MR02-SS151		MR02-SS152	MR02-SS153	MR02-SS154	MR02-SS155	MR02-SS156	MR02-SS157	MR02-SS158	MR02-SS159	MR02-SS160	MR02-SS161	
Sample ID					MR02-SS151-10A	MR02-SS151D-10A	MR02-SS152-10A	MR02-SS153-10A	MR02-SS154-10A	MR02-SS155-10A	MR02-SS156-10A	MR02-SS157-10A	MR02-SS158-10A	MR02-SS159-10A	MR02-SS160-10A	MR02-SS161-10A	MR02-SS161D-10A
Sample Date					02/01/10	02/01/10	02/01/10	02/01/10	02/01/10	02/02/10	02/02/10	02/02/10	02/02/10	02/02/10	02/02/10	02/01/10	02/01/10
Chemical Name																	
Semivolatile Organic Compounds (µg/kg)																	
No Detections																	
Explosives (µg/kg)																	
No Detections																	
Total Metals (mg/kg)																	
Aluminum	5,487	--	99,000	7,700	1,370 J	1,430 J	2,420 J	1,150 J	2,150 J	1,830 J	1,480 J	4,020 J	1,370 J	601 J	2,370 J	1,050 J	859 J
Antimony	0.447	--	41	3.1	2.4 UJ	2.3 UJ	1.8 UJ	0.17 J	2 UJ	2.3 UJ	1.9 UJ	1.6 UJ	2.5 UJ	1.9 UJ	1.9 UJ	1.9 UJ	2 UJ
Arsenic	0.626	5.8	1.6	0.39	0.34 J	0.4 J	0.27 J	0.22 J	0.27 J	0.44 J	0.41 J	0.75 J	0.39 J	0.2 J	0.29 J	0.47 U	0.49 U
Barium	14.5	580	19,000	1,500	10.5 J	11.3 J	37.9	12 J	8.1 J	17 J	13.3 J	3.6 J	25.9 J	7.3 J	13.2 J	10.8 J	10.6 J
Beryllium	0.103	--	200	16	0.01 J	0.01 J	0.07 J	0.02 J	0.02 J	1.1 U	0.96 U	0.79 U	1.2 U	0.94 U	0.97 U	0.02 J	0.02 J
Cadmium	0.033	3	80	7	0.85 U	0.81 U	0.65 U	0.77 U	0.69 U	0.79 U	0.67 U	0.56 U	0.88 U	0.66 U	0.02 J	0.66 U	0.68 U
Calcium	6,360	--	--	--	1,200 U	1,200 U	1,290	1,100 UJ	990 UJ	1,160	960 U	790 UJ	1,200 U	940 U	970 UJ	940 UJ	980 UJ
Chromium	6.05	3.8	5.6	0.29	1.3 J	1.4 J	1.9	2.2 U	2 U	2.3 U	1.9 U	4	2.5 U	1.9 U	1.9 U	1.9 U	2 U
Cobalt	0.294	--	30	2.3	0.05 J	0.08 J	0.18 J	0.08 J	0.05 J	11 U	9.6 U	0.06 J	12 U	9.4 U	0.1 J	0.04 J	0.04 J
Copper	4.83	700	4,100	310	6.1 U	5.8 U	4.6 U	5.5 U	4.9 U	5.6 U	4.8 U	4 U	6.3 U	4.7 U	4.8 U	4.7 U	4.9 U
Iron	3,245	150	72,000	5,500	1,230	1,240	819	383	1,020	1,120	650	2,700	598	357	827	479	413
Lead	12.3	270	800	400	5.8	6.6	5.8	4.5	4.7	5.8	13	3.3	10.1	4	10.1	4.8	4.2
Manganese	13.7	65	2,300	180	35.6	42.7	86.2	64.3	35.9	91.3	17.6	10.6	9.2	11.7	34.6	59.1	53.1
Mercury	0.081	1	31	2.3	0.04 J	0.03 J	0.03 J	0.04 J	0.03 J	0.05 J	0.05 J	0.01 J	0.23 U	0.18 U	0.04 J	0.01 J	0.19 U
Nickel	1.21	130	2,000	150	0.44 J	0.52 J	0.99 J	0.6 J	0.68 J	9 UJ	7.7 UJ	0.67 J	10 UJ	7.5 UJ	7.8 U	0.42 J	0.36 J
Potassium	116	--	--	--	160 J	125 J	182 J	1,100 U	990 U	1,100 U	960 U	790 U	1,200 U	940 U	970 U	940 U	980 U
Selenium	0.563	2.1	510	39	1.2 U	1.2 U	0.92 U	1.1 U	0.99 U	0.26 J	0.19 J	0.2 J	0.22 J	0.12 J	0.14 J	0.94 U	0.98 U
Silver	0.14	3.4	510	39	2.4 U	2.3 U	1.8 U	2.2 U	2 U	2.3 U	1.9 U	1.6 U	2.5 U	1.9 U	1.9 U	1.9 U	2 U
Sodium	80.9	--	--	--	1,200 U	1,200 U	920 U	1,100 U	990 U	1,100 U	960 U	790 U	1,200 U	940 U	970 U	940 U	980 U
Vanadium	8.9	--	520	39	3.2 J	3.3 J	2.6 J	1.4 J	2.9 J	11 U	9.6 U	7.5 J	2.9 J	1.4 J	3 J	1.6 J	1.4 J
Zinc	10.8	1,200	31,000	2,300	5.9	4.9	11.1	2.6 J	2.6 J	4.5	3.8 U	3.2 U	5 U	3.7 U	4.5	3.8	3.1 J

Notes:

Shading indicates exceedance of two times the mean base background concentration for surface soil

Bold box indicates exceedance of NC SSLs

Bold text indicates exceedance of Adjusted Industrial Soil RSLs

Underline indicates exceedance of Adjusted Residential Soil RSLs

RSLs were adjusted for noncarcinogens to account for exposure to multiple constituents

NA - Not analyzed

J - Analyte present, value may or may not be accurate or precise

U - The material was analyzed for, but not detected

UJ - Analyte not detected, quantitation limit may be inaccurate

mg/kg - Milligrams per kilogram

µg/kg - Micrograms per kilogram

TABLE A1-1b
UXO-02 Surface Soil Analytical Results
Site UXO-02, Unnamed Explosive Contaminated Range
PA/SI Report
MCIEAST-MCB CAMLEJ, North Carolina

Station ID	**Camp Lejeune Background SS 2X Mean**	**NCSSLs (January, 2010)**	**Adjusted Industrial Soil RSLs (May, 2010)**	**Adjusted Residential Soil RSLs (May, 2010)**	MR02-SS162	MR02-SS163	MR02-SS164	MR02-SS165	MR02-SS166	MR02-SS167	MR02-SS168	MR02-SS169	MR02-SS170	MR02-SS171		MR02-SS172	MR02-SS173
Sample ID					MR02-SS162-10A	MR02-SS163-10A	MR02-SS164-10A	MR02-SS165-10A	MR02-SS166-10A	MR02-SS167-10A	MR02-SS168-10A	MR02-SS169-10A	MR02-SS170-10A	MR02-SS171-10A	MR02-SS171D-10A	MR02-SS172-10A	MR02-SS173-10A
Sample Date					02/01/10	02/01/10	02/01/10	02/01/10	02/01/10	02/02/10	02/02/10	02/02/10	02/02/10	02/02/10	02/02/10	02/02/10	02/02/10
Chemical Name																	
Semivolatile Organic Compounds (µg/kg)																	
No Detections																	
Explosives (µg/kg)																	
No Detections																	
Total Metals (mg/kg)																	
Aluminum	5,487	--	99,000	7,700	1,250 J	314 J	212 J	992 J	1,650 J	1,650 J	1,540 J	3,240 J	5,130 J	1,490 J	1,090 J	843 J	602 J
Antimony	0.447	--	41	3.1	1.7 UJ	2 UJ	1.7 UJ	1.9 UJ	2.7 UJ	2 UJ	1.8 UJ	1.8 UJ	2.5 UJ	4.4 UJ	3 UJ	2.4 UJ	3.1 UJ
Arsenic	0.626	5.8	1.6	0.39	0.29 J	0.51 U	0.43 U	0.27 J	0.34 J	0.36 J	0.31 J	0.37 J	0.46 J	0.68 J	0.58 J	0.59 UJ	0.37 J
Barium	14.5	580	19,000	1,500	7.9 J	9.2 J	34 U	5.4 J	7.8 J	5.6 J	5.9 J	26.8 J	31 J	72.4 J	58.3 J	6.1 J	30 J
Beryllium	0.103	--	200	16	0.86 U	1 U	0.85 U	0.96 U	1.3 U	0.99 U	0.91 U	0.88 U	1.2 U	2.2 U	1.5 U	1.2 U	1.6 U
Cadmium	0.033	3	80	7	0.6 U	0.72 U	0.6 U	0.01 J	0.94 U	0.69 U	0.64 U	0.62 U	0.86 U	0.03 J	1 U	0.83 U	0.03 J
Calcium	6,360	--	--	--	860 U	1,000 UJ	850 U	960 UJ	1,300 UJ	990 U	910 U	1,270	1,290	3,540 J	2,680 J	1,200 UJ	2,060 J
Chromium	6.05	3.8	5.6	0.29	1.5 J	0.45 J	0.34 J	1.9 U	1.5 J	2 U	1.8 U	1.8	2.5 U	4.4 U	3 U	2.4 U	3.1 U
Cobalt	0.294	--	30	2.3	0.08 J	10 U	0.04 J	0.03 J	0.1 J	9.9 U	9.1 U	8.8 U	0.52 J	0.32 J	0.17 J	0.05 J	0.1 J
Copper	4.83	700	4,100	310	4.3 U	5.1 U	4.3 U	4.8 U	6.7 U	5 U	4.6 U	4.4 U	6.2 U	11 U	7.4 U	5.9 U	7.8 U
Iron	3,245	150	72,000	5,500	847	154	141	765	868	836	927	931	1,160	912	725	415	450
Lead	12.3	270	800	400	3.4	4.9	2.4	4	5.2	6.2	5.5	6.4	12.1	27.6	20.6	6.3	11
Manganese	13.7	65	2,300	180	23.2	19.5	10	11	26.5	27.3	24.8	119	84.3	30.3	22.1	12.2	33.4
Mercury	0.081	1	31	2.3	0.02 J	0.01 J	0.02 J	0.02 J	0.04 J	0.03 J	0.03 J	0.04 J	0.05 J	0.14 J	0.12 J	0.02 J	0.06 J
Nickel	1.21	130	2,000	150	0.28 J	0.3 J	0.2 J	7.7 U	0.95 J	7.9 UJ	7.3 UJ	7.1 UJ	9.9 UJ	18 U	12 U	9.5 U	12 U
Potassium	116	--	--	--	81.6 J	1,000 U	32.3 J	960 U	1,300 U	990 U	910 U	880 U	1,200 U	2,200 U	1,500 U	1,200 U	1,600 U
Selenium	0.563	2.1	510	39	0.86 U	1 U	0.85 U	0.96 U	0.26 J	0.99 U	0.17 J	0.2 J	0.37 J	0.39 J	0.33 J	1.2 U	1.6 U
Silver	0.14	3.4	510	39	1.7 U	2 U	1.7 U	1.9 U	2.7 U	2 U	1.8 U	1.8 U	2.5 U	4.4 U	3 U	2.4 U	3.1 U
Sodium	80.9	--	--	--	860 U	1,000 U	850 U	960 U	1,300 U	990 U	910 U	880 U	1,200 U	2,200 U	1,500 U	1,200 U	1,600 U
Vanadium	8.9	--	520	39	2.8 J	0.76 J	0.68 J	2.4 J	3 J	9.9 U	9.1 U	8.8 U	12 U	4.8 J	3.3 J	2 J	2.2 J
Zinc	10.8	1,200	31,000	2,300	3.4 U	1.4 J	3.4 U	3.8 U	5.6	4 U	5.2	6.4	11.1	27 J	11 J	4.7 U	8.5

Notes:

Shading indicates exceedance of two times the mean base background concentration for surface soil

Bold box indicates exceedance of NC SSLs

Bold text indicates exceedance of Adjusted Industrial Soil RSLs

Underline indicates exceedance of Adjusted Residential Soil RSLs

RSLs were adjusted for noncarcinogens to account for exposure to multiple constituents

NA - Not analyzed

J - Analyte present, value may or may not be accurate or precise

U - The material was analyzed for, but not detected

UJ - Analyte not detected, quantitation limit may be inaccurate

mg/kg - Milligrams per kilogram

µg/kg - Micrograms per kilogram

TABLE A1-1b
UXO-02 Surface Soil Analytical Results
Site UXO-02, Unnamed Explosive Contaminated Range
PA/SI Report
MCIEAST-MCB CAMLEJ, North Carolina

Station ID	**Camp Lejeune Background SS 2X Mean**	**NCSSLs (January, 2010)**	**Adjusted Industrial Soil RSLs (May, 2010)**	**Adjusted Residential Soil RSLs (May, 2010)**	MR02-SS174	MR02-SS175	MR02-SS176	MR02-SS177	MR02-SS178	MR02-SS179	MR02-SS180	MR02-SS181		MR02-SS182	MR02-SS183	MR02-SS184
Sample ID					MR02-SS174-10A	MR02-SS175-10A	MR02-SS176-10A	MR02-SS177-10A	MR02-SS178-10A	MR02-SS179-10A	MR02-SS180-10A	MR02-SS181-10A	MR02-SS181D-10A	MR02-SS182-10A	MR02-SS183-10A	MR02-SS184-10A
Sample Date					02/01/10	02/01/10	02/01/10	02/01/10	02/01/10	02/01/10	02/02/10	02/02/10	02/02/10	02/02/10	02/01/10	02/01/10
Chemical Name																
Semivolatile Organic Compounds (µg/kg)																
No Detections																
Explosives (µg/kg)																
No Detections																
Total Metals (mg/kg)																
Aluminum	5,487	--	99,000	7,700	1,290 J	652 J	993 J	664 J	1,430 J	1,200 J	1,150 J	332 J	319 J	320 J	8,670 J	1,830 J
Antimony	0.447	--	41	3.1	2.3 UJ	2.6 UJ	4.7 UJ	3 UJ	2 UJ	2.2 UJ	1.4 UJ	1.9 UJ	2.1 UJ	1.8 UJ	0.12 J	1.8 UJ
Arsenic	0.626	5.8	1.6	0.39	0.21 J	0.66 U	1.2 U	0.76 U	0.32 J	0.32 J	0.33 J	0.18 J	0.24 J	0.16 J	0.53	0.36 J
Barium	14.5	580	19,000	1,500	10.4 J	53 U	21.8 J	8.7 J	6.4 J	5.8 J	7.6 J	14.6 J	14.4 J	3.3 J	14.9 J	7.1 J
Beryllium	0.103	--	200	16	1.2 U	1.3 U	2.4 U	1.5 U	1 U	0.01 J	0.68 U	0.94 U	1 U	0.92 U	0.09 J	0.02 J
Cadmium	0.033	3	80	7	0.81 U	0.93 U	0.13 J	1 U	0.7 U	0.76 U	0.48 U	0.66 U	0.73 U	0.64 U	0.63 U	0.61 U
Calcium	6,360	--	--	--	1,200 UJ	1,300 U	2,400 UJ	1,500 U	1,000 UJ	1,100 UJ	680 U	940 U	1,000 U	920 UJ	1,250 J	4,580 J
Chromium	6.05	3.8	5.6	0.29	2.3 U	0.81 J	1.3 J	0.91 J	2 U	2.2 U	1.4 U	1.9 U	2.1 U	1.8 U	**8.5**	2.4
Cobalt	0.294	--	30	2.3	0.04 J	0.1 J	0.15 J	0.13 J	0.05 J	11 U	6.8 U	9.4 U	10 U	9.2 U	0.48 J	0.22 J
Copper	4.83	700	4,100	310	5.8 U	6.6 U	12 U	7.6 U	5 U	5.4 U	3.4 U	4.7 U	5.2 U	4.6 U	7.8	7.4
Iron	3,245	150	72,000	5,500	468	294	325	434	724	774	695	164	157	286	2,650	1,060
Lead	12.3	270	800	400	3.9	10.3	6.6	8.3	5	3.7	5	2.2	2.2	3.1	7.2	4.8
Manganese	13.7	65	2,300	180	29.3	30.1	57.2	5.9	8.4	8.2	21.3	5.2	5.5	7.5	20.2	14.3
Mercury	0.081	1	31	2.3	0.02 J	0.05 J	0.1 J	0.05 J	0.03 J	0.18 U	0.02 J	0.18 U	0.16 U	0.01 J	0.19 U	0.01 J
Nickel	1.21	130	2,000	150	0.52 J	0.62 J	1.2 J	0.66 J	0.44 J	0.37 J	5.4 UJ	7.5 UJ	8.3 UJ	7.3 U	2.3 J	1.2 J
Potassium	116	--	--	--	1,200 U	110 J	2,400 U	162 J	1,000 U	1,100 U	680 U	940 U	1,000 U	920 U	900 U	880 U
Selenium	0.563	2.1	510	39	1.2 U	1.3 U	0.34 J	0.22 J	1 U	0.12 J	0.11 J	0.11 J	1 U	0.92 U	0.14 J	0.88 U
Silver	0.14	3.4	510	39	2.3 U	2.6 U	4.7 U	3 U	2 U	2.2 U	1.4 U	1.9 U	2.1 U	1.8 U	1.8 U	1.8 U
Sodium	80.9	--	--	--	1,200 U	1,300 U	2,400 U	1,500 U	1,000 U	1,100 U	680 U	940 U	1,000 U	920 U	900 U	880 U
Vanadium	8.9	--	520	39	1.8 J	1.5 J	1.8 J	1.5 J	2.3 J	2.6 J	2.2 J	0.54 J	0.48 J	1 J	9.7	3 J
Zinc	10.8	1,200	31,000	2,300	3.2 J	9.5	21.2	6 U	4.1	1.6 J	2.7 U	3.8 U	4.2 U	6.5	19.7	18.2

Notes:

Shading indicates exceedance of two times the mean base background concentration for surface soil

Bold box indicates exceedance of NC SSLs

Bold text indicates exceedance of Adjusted Industrial Soil RSLs

Underline indicates exceedance of Adjusted Residential Soil RSLs

RSLs were adjusted for noncarcinogens to account for exposure to multiple constituents

NA - Not analyzed

J - Analyte present, value may or may not be accurate or precise

U - The material was analyzed for, but not detected

UJ - Analyte not detected, quantitation limit may be inaccurate

mg/kg - Milligrams per kilogram

µg/kg - Micrograms per kilogram

TABLE A1-2
IR69 Surface Soil Analytical Results
Site UXO-02, Unnamed Explosive Contaminated Range
PA/SI Report
MCB CamLej
North Carolina

Station ID	**Camp Lejeune Background SS 2X Mean**	**NCSSLs (January, 2010)**	**Adjusted Industrial Soil RSLs (May, 2010)**	**Adjusted Residential Soil RSLs (May, 2010)**	MR02-IR69-SS01		MR02-IR69-SS02	MR02-IR69-SS03	MR02-IR69-SS04	MR02-IR69-SS05	MR02-IR69-SS06	MR02-IR69-SS07
Sample ID					MR02-IR69-SS01-10A	MR02-IR69-SS01D-10A	MR02-IR69-SS02-10A	MR02-IR69-SS03-10A	MR02-IR69-SS04-10A	MR02-IR69-SS05-10A	MR02-IR69-SS06-10A	MR02-IR69-SS07-10A
Sample Date					03/04/10	03/04/10	03/13/10	03/13/10	03/13/10	03/13/10	03/13/10	03/13/10
Chemical Name												
Semivolatile Organic Compounds (µg/kg)												
No Detections												NA
Explosives (µg/kg)												
Nitroglycerin	--	--	6,200	610	880 U	1,400 U	850 U	930 U	870 U	890 U	960 U	980 U
Total Metals (mg/kg)												
Aluminum	5,487	--	99,000	7,700	3,550	3,760	2,970	1,140	1,480	1,320	1,460	3,460
Antimony	0.447	--	41	3.1	2 UJ	2.7 UJ	2.2 UJ	0.12 J	2.5 UJ	2 UJ	2.4 UJ	2.1 UJ
Arsenic	0.626	5.8	1.6	0.39	0.45 J	0.44 J	0.45 J	0.27 J	0.51 J	0.24 J	0.42 J	0.94
Barium	14.5	580	19,000	1,500	30.8 J	29.6 J	13.7 J	6.4 J	21.4 J	6.9 J	5 J	9.6 J
Calcium	6,360	--	--	--	980 U	1,300 U	1,100 U	1,100 U	1,200 U	1,000 U	1,200 U	1,000 U
Chromium	6.05	3.8	5.6	0.29	2.2	2.7 U	2.3	2.2 U	2.5 U	2 U	2.4 U	4.4
Copper	4.83	700	4,100	310	4.9 U	6.7 U	5.4 U	5.4 U	6.2 U	5 U	6.1 U	5.3 U
Iron	3,245	150	72,000	5,500	1,030	1,110	977	469	559	587	797	2,490
Lead	12.3	270	800	400	7.4	7.7	8.4	4	5.3	2.9	3.2	3.8
Manganese	13.7	65	2,300	180	57.2	48.4	60.4	12	34.3	47.5	27.5	17.5
Mercury	0.081	1	31	2.3	0.03 J	0.04 J	0.02 J	0.03 J	0.04 J	0.19 U	0.03 J	0.03 J
Potassium	116	--	--	--	197 J	170 J	107 J	63.8 J	101 J	74.3 J	91.8 J	194 J
Selenium	0.563	2.1	510	39	0.11 J	1.3 U	0.13 J	1.1 U	1.2 U	1 U	1.2 U	1 U
Sodium	80.9	--	--	--	980 U	1,300 U	1,100 U	1,100 U	1,200 U	1,000 U	1,200 U	1,000 U
Thallium	0.36	--	--	--	0.05 J	0.04 J	0.03 J	0.54 U	0.62 U	0.5 U	0.61 U	0.02 J
Vanadium	8.9	--	520	39	3.9 J	4.2 J	3.9 J	2.2 J	2.6 J	2.1 J	2.9 J	7.6 J
Zinc	10.8	1,200	31,000	2,300	14.4	13.3	11.1	4.4 U	5 U	4 U	4.8 U	4.3

Notes:

Shading indicates exceedance of two times the mean base background concentration for surface soil

Bold box indicates exceedance of NC SSLs

Bold text indicates exceedance of Adjusted Industrial Soil RSLs

Underline indicates exceedance of Adjusted Residential Soil RSLs

RSLs were adjusted for noncarcinogens to account for exposure to multiple constituents

NA - Not analyzed

J - Analyte present, value may or may not be accurate or precise

U - The material was analyzed for, but not detected

UJ - Analyte not detected, quantitation limit may be inaccurate

mg/kg - Milligrams per kilogram

µg/kg - Micrograms per kilogram

TABLE A1-2
IR69 Surface Soil Analytical Results
Site UXO-02, Unnamed Explosive Contaminated Range
PA/SI Report
MCB CamLej
North Carolina

Station ID	**Camp Lejeune Background SS 2X Mean**	**NCSSLs (January, 2010)**	**Adjusted Industrial Soil RSLs (May, 2010)**	**Adjusted Residential Soil RSLs (May, 2010)**	MR02-IR69-SS08	MR02-IR69-SS09	MR02-IR69-SS10	MR02-IR69-SS11		MR02-IR69-SS12	MR02-IR69-SS13	MR02-IR69-SS14
Sample ID					MR02-IR69-SS08-10A	MR02-IR69-SS09-10A	MR02-IR69-SS10-10A	MR02-IR69-SS11-10A	MR02-IR69-SS11D-10A	MR02-IR69-SS12-10A	MR02-IR69-SS13-10A	MR02-IR69-SS14-10A
Sample Date					02/25/10	02/25/10	02/25/10	02/25/10	02/25/10	02/24/10	02/23/10	02/23/10
Chemical Name												
Semivolatile Organic Compounds (µg/kg)												
No Detections					NA	NA	NA	NA	NA	NA	NA	NA
Explosives (µg/kg)												
Nitroglycerin	--	--	6,200	610	900 U	850 U	860 U	1,100 U	1,200 U	1,000 U	850 U	1,200 U
Total Metals (mg/kg)												
Aluminum	5,487	--	99,000	7,700	1,890 J	1,970 J	2,080 J	2,030 J	2,190 J	1,860 J	1,940 J	1,740 J
Antimony	0.447	--	41	3.1	1.8 UJ	2 UJ	1.9 UJ	2.6 UJ	2.2 UJ	2.6 UJ	1.7 UJ	0.4 J
Arsenic	0.626	5.8	1.6	0.39	0.41 J	0.43 J	0.46 J	0.48 J	0.59	0.51 J	0.24 J	0.52 J
Barium	14.5	580	19,000	1,500	36 U	41 U	38 U	53 U	45 U	52 U	34 U	59 U
Calcium	6,360	--	--	--	900 U	1,000 U	950 U	1,300 U	1,100 U	1,300 U	860 U	1,500 U
Chromium	6.05	3.8	5.6	0.29	1.6 J	1.6 J	1.6 J	1.7 J	1.9 J	1.8 J	1.6 J	1.9 J
Copper	4.83	700	4,100	310	4.5 U	5.1 U	4.8 U	6.6 U	5.6 U	2.4 J	1.2 J	2.3 J
Iron	3,245	150	72,000	5,500	1,090	1,100	1,240	1,140	1,330	1,070	922	1,050
Lead	12.3	270	800	400	3.6	2.2	3.2	3.5	4.7	3.6	3.1	4.5
Manganese	13.7	65	2,300	180	9	16.9	10.7	12.6	12.1	30.1	8.1	18
Mercury	0.081	1	31	2.3	0.19 U	0.17 U	0.18 U	0.21 U	0.17 U	0.24 U	0.15 U	0.23 U
Potassium	116	--	--	--	58.8 J	45.9 J	47.9 J	92.9 J	90.8 J	152 J	43 J	122 J
Selenium	0.563	2.1	510	39	0.9 U	1 U	0.95 U	1.3 U	0.16 J	1.3 U	0.86 U	1.5 U
Sodium	80.9	--	--	--	7.4 J	5.3 J	5.4 J	19.9 J	19.1 J	1,300 U	860 U	1,500 U
Thallium	0.36	--	--	--	0.45 U	0.51 U	0.48 U	0.66 U	0.56 U	0.65 U	0.43 U	0.74 U
Vanadium	8.9	--	520	39	9 U	10 U	9.5 U	13 U	11 U	13 U	8.6 U	15 U
Zinc	10.8	1,200	31,000	2,300	3.6 U	4.1 U	3.8 U	5.3 U	4.5 U	31.2	3.4 U	10.1

Notes:

Shading indicates exceedance of two times the mean base background concentration for surface soil

Bold box indicates exceedance of NC SSLs

Bold text indicates exceedance of Adjusted Industrial Soil RSLs

Underline indicates exceedance of Adjusted Residential Soil RSLs

RSLs were adjusted for noncarcinogens to account for exposure to multiple constituents

NA - Not analyzed

J - Analyte present, value may or may not be accurate or precise

U - The material was analyzed for, but not detected

UJ - Analyte not detected, quantitation limit may be inaccurate

mg/kg - Milligrams per kilogram

µg/kg - Micrograms per kilogram

TABLE A1-2
IR69 Surface Soil Analytical Results
Site UXO-02, Unnamed Explosive Contaminated Range
PA/SI Report
MCB CamLej
North Carolina

Station ID	**Camp Lejeune Background SS 2X Mean**	**NCSSLs (January, 2010)**	**Adjusted Industrial Soil RSLs (May, 2010)**	**Adjusted Residential Soil RSLs (May, 2010)**	MR02-IR69-SS15	MR02-IR69-SS16	MR02-IR69-SS17	MR02-IR69-SS18	MR02-IR69-SS19	MR02-IR69-SS20	MR02-IR69-SS21	
Sample ID					MR02-IR69-SS15-10A	MR02-IR69-SS16-10A	MR02-IR69-SS17-10A	MR02-IR69-SS18-10A	MR02-IR69-SS19-10A	MR02-IR69-SS20-10A	MR02-IR69-SS21-10A	MR02-IR69-SS21D-10A
Sample Date					02/24/10	02/24/10	02/24/10	02/24/10	02/24/10	02/25/10	02/25/10	02/25/10
Chemical Name												
Semivolatile Organic Compounds (µg/kg)												
No Detections					NA	NA	NA	NA	NA	NA	NA	NA
Explosives (µg/kg)												
Nitroglycerin	--	--	6,200	610	1,300 U	900 U	860 J	1,300 U	1,700 U	1,200 U	1,000 U	1,000 U
Total Metals (mg/kg)												
Aluminum	5,487	--	99,000	7,700	3,600 J	2,820 J	1,640 J	1,380 J	2,120 J	808 J	1,350 J	1,290 J
Antimony	0.447	--	41	3.1	3 UJ	2.1 UJ	2.2 UJ	2.9 UJ	3.8 UJ	2.8 UJ	2 UJ	2.5 UJ
Arsenic	0.626	5.8	1.6	0.39	1.6	0.61	0.5 J	0.62 J	0.6 J	0.34 J	0.54	0.47 J
Barium	14.5	580	19,000	1,500	60 U	43 U	44 U	57 U	75 U	56 U	40 U	49 U
Calcium	6,360	--	--	--	39,700	1,100 U	1,100 U	1,400 U	1,900 U	1,400 U	1,000 U	1,200 U
Chromium	6.05	3.8	5.6	0.29	**12**	2.8	1.6 J	2 J	1.6 J	0.99 J	1.4 J	1.7 J
Copper	4.83	700	4,100	310	5.6 J	1.6 J	2.2 J	2.8 J	4.3 J	3.2 J	5.1 U	6.2 U
Iron	3,245	150	72,000	5,500	4,530	2,090	825	1,120	660	472	1,590	1,640
Lead	12.3	270	800	400	3.2	4	221	7.5	10.2	6	3.9	3.5
Manganese	13.7	65	2,300	180	141	7.4	60.9	27.4	36.9	21.5	5.9	6.6
Mercury	0.081	1	31	2.3	0.25 U	0.18 U	0.19 U	0.28 U	0.33 U	0.25 U	0.15 U	0.16 U
Potassium	116	--	--	--	591 J	78.6 J	98.2 J	111 J	133 J	152 J	50.6 J	51.8 J
Selenium	0.563	2.1	510	39	0.54 J	1.1 U	1.1 U	0.23 J	1.9 U	1.4 U	1 U	1.2 U
Sodium	80.9	--	--	--	1,500 U	1,100 U	1,100 U	1,400 U	1,900 U	39.8 J	7.8 J	6.3 J
Thallium	0.36	--	--	--	0.76 U	0.53 U	0.56 U	0.72 U	0.94 U	0.71 U	0.51 U	0.62 U
Vanadium	8.9	--	520	39	16.9	11 U	11 U	14 U	19 U	14 U	10 U	12 U
Zinc	10.8	1,200	31,000	2,300	27.7	4.3 U	6.3	5.7 U	8.4	10.1	7.8	6.7

Notes:

Shading indicates exceedance of two times the mean base background concentration for surface soil

Bold box indicates exceedance of NC SSLs

Bold text indicates exceedance of Adjusted Industrial Soil RSLs

Underline indicates exceedance of Adjusted Residential Soil RSLs

RSLs were adjusted for noncarcinogens to account for exposure to multiple constituents

NA - Not analyzed

J - Analyte present, value may or may not be accurate or precise

U - The material was analyzed for, but not detected

UJ - Analyte not detected, quantitation limit may be inaccurate

mg/kg - Milligrams per kilogram

µg/kg - Micrograms per kilogram

TABLE A1-3
UXO-02 Subsurface Soil Analytical Results
Site UXO-02, Unnamed Explosive Contaminated Range
PA/SI Report
MCB CamLej
North Carolina

Station ID	**Camp Lejeune Background SB 2X Mean**	**NCSSLs (January, 2010)**	**Adjusted Industrial Soil RSLs (May, 2010)**	**Adjusted Residential Soil RSLs (May, 2010)**	MR02-TW01/IS01	MR02-TW02/IS02	MR02-TW03/IS03	MR02-TW04/IS04	MR02-TW06/IS06	MR02-TW08/IS08	MR02-TW09/IS09	MR02-TW10/IS10	MR02-TW11/IS11	
Sample ID					MR02-IS01-6-7-10A	MR02-IS02-5-6-10A	MR02-IS03-2-3-10A	MR02-IS04-5-6-10A	MR02-IS06-3-4-10A	MR02-IS08-4-5-10A	MR02-IS09-8-9-10A	MR02-IS10-2-3-10A	MR02-IS11-5-6-10A	MR02-IS11D-5-6-10A
Sample Date					03/23/10	03/23/10	03/23/10	03/23/10	03/23/10	03/23/10	03/23/10	03/24/10	03/24/10	03/24/10
Chemical Name														
Semivolatile Organic Compounds (µg/kg)														
No Detections					NA	NA	NA	NA	NA	NA	NA	NA	NA	NA
Explosives (µg/kg)														
No Detections					NA	NA	NA	NA	NA	NA	NA	NA	NA	NA
Total Metals (mg/kg)														
Aluminum	10,369	--	99,000	7,700	20,500	24,000	23,100	19,400	3,520	13,500	21,000	9,210	743 J	447 J
Antimony	0.36	--	41	3.1	2 UJ	2 UJ	2.1 UJ	1.9 UJ	1.4 UJ	2 UJ	2.5 UJ	2.2 UJ	2 UJ	2.2 UJ
Arsenic	2.12	5.8	1.6	0.39	**3.8**	**5.5**	**4.5**	**3.5**	0.26 J	**1.9**	1.1	0.3 J	0.5 U	0.55 U
Barium	16.6	580	19,000	1,500	23.7 J	21.4 J	28.3 J	20.1 J	11.7 J	30.2 J	20.4 J	7 J	3 J	2.5 J
Cadmium	0.023	3	80	7	0.7 U	0.68 U	0.73 U	0.66 U	0.49 U	0.71 U	0.87 U	0.76 U	0.7 U	0.76 U
Chromium	14.5	3.8	5.6	0.29	**30.5**	**33.9**	**25.6**	**26.5**	4.5	**11.6**	**27.9**	**8.6**	2 U	2.2 U
Cobalt	0.822	--	30	2.3	10 U	9.8 U	10 U	0.82 J	7.1 U	10 U	12 U	0.38 J	10 U	11 U
Copper	2.56	700	4,100	310	5 U	4.9 U	5.2 U	5.7	3.5 U	5.1 U	6.2 U	5.4 U	5 U	5.5 U
Iron	5,439	150	72,000	5,500	9,330 J	16,100 J	9,870 J	10,800 J	1,150 J	5,120 J	6,850 J	1,330 J	289 J	193 J
Lead	8.49	270	800	400	7.6	7.7	5.7	7.4	3	5.8	7.3	4	1.2	1.6
Magnesium	363	--	--	--	1,330 J	1,230 J	1,000 U	1,150 J	710 U	1,000 U	1,200 U	1,100 U	1,000 U	1,100 U
Manganese	9.25	65	2,300	180	27.6	22	19	24	11.1	19.5	24.6	6.6	6.8	4.8
Mercury	0.071	1	31	2.3	0.19 U	0.21 U	0.01 J	0.21 U	0.15 U	0.01 J	0.19 U	0.02 J	0.15 U	0.16 U
Nickel	2.27	130	2,000	150	8 U	7.8 U	8.4 U	7.5 U	5.6 U	8.1 U	9.9 U	8.7 U	8 U	8.7 U
Potassium	361	--	--	--	1,140 J	1,470 J	1,270 J	1,460 J	239 J	656 J	1,520 J	250 J	45.7 J	38.7 J
Selenium	0.505	2.1	510	39	0.35 J	0.48 J	0.51 J	0.26 J	0.08 J	0.3 J	0.11 J	0.28 J	1 U	0.05 J
Silver	0.129	3.4	510	39	2 U	2 U	2.1 U	1.9 U	1.4 U	2 U	2.5 U	2.2 U	2 U	2.2 U
Thallium	0.38	--	--	--	0.15 J	0.17 J	0.16 J	0.15 J	0.02 J	0.11 J	0.11 J	0.05 J	0.5 U	0.02 J
Vanadium	17.2	--	520	39	31	34.6	33.1	27.8	4.6 J	17.2	29.5	11 U	10 U	11 U
Zinc	6.59	1,200	31,000	2,300	13.5	17	11.7	15.7	2.8 U	13.4	19.5	4.3 U	4 U	4.4 U

Notes:

Shading indicates exceedance of two times the mean base background concentration for subsurface soil

Bold box indicates exceedance of NC SSLs

Bold text indicates exceedance of Adjusted Industrial Soil RSLs

Underline indicates exceedance of Adjusted Residential Soil RSLs

RSLs were adjusted for noncarcinogens to account for exposure to multiple constituents

NA - Not analyzed

J - Analyte present, value may or may not be accurate or precise

U - The material was analyzed for, but not detected

UJ - Analyte not detected, quantitation limit may be inaccurate

mg/kg - Milligrams per kilogram

µg/kg - Micrograms per kilogram

TABLE A1-3
UXO-02 Subsurface Soil Analytical Results
Site UXO-02, Unnamed Explosive Contaminated Range
PA/SI Report
MCB CamLej
North Carolina

Station ID	**Camp Lejeune Background SB 2X Mean**	**NCSSLs (January, 2010)**	**Adjusted Industrial Soil RSLs (May, 2010)**	**Adjusted Residential Soil RSLs (May, 2010)**	MR02-TW12/IS12	MR02-TW13/IS13	MR02-TW14/IS14	MR02-TW15/IS15	MR02-TW16/IS16	MR02-TW17/IS17	MR02-TW18/IS18	MR02-TW19/IS19	MR02-TW20/IS20	MR02-TW21/IS21	
Sample ID					MR02-IS12-5-6-10A	MR02-IS13-2-3-10A	MR02-IS14-2-3-10A	MR02-IS15-4-5-10A	MR02-IS16-5-6-10A	MR02-IS17-5-6-10A	MR02-IS18-2-3-10A	MR02-IS19-2-3-10A	MR02-IS20-3-4-10A	MR02-IS21-5-6-10A	MR02-IS21D-5-6-10A
Sample Date					03/24/10	03/24/10	03/25/10	03/25/10	03/24/10	03/22/10	03/22/10	03/25/10	03/22/10	03/25/10	03/25/10
Chemical Name															
Semivolatile Organic Compounds (µg/kg)															
No Detections					NA	NA	NA	NA	NA	NA	NA	NA	NA	NA	NA
Explosives (µg/kg)															
No Detections					NA	NA	NA	NA	NA	NA	NA	NA	NA	NA	NA
Total Metals (mg/kg)															
Aluminum	10,369	--	99,000	7,700	1,160	7,640	1,900	997	1,080	17,700	2,270	1,750	2,060	16,600	20,500
Antimony	0.36	--	41	3.1	2.2 UJ	1.5 UJ	1.9 UJ	2.2 UJ	1.6 UJ	2.2 UJ	2 UJ	2.1 UJ	2.2 UJ	1.9 UJ	1.9 UJ
Arsenic	2.12	5.8	1.6	0.39	0.54 U	0.36 J	0.47 U	0.54 U	0.12 J	**5.5**	0.51 U	0.52 U	0.18 J	**2.9**	**4.1**
Barium	16.6	580	19,000	1,500	2 J	5 J	3.2 J	1.9 J	4 J	23.6 J	4.4 J	3.8 J	2.5 J	18.6 J	23.2 J
Cadmium	0.023	3	80	7	0.75 U	0.52 U	0.65 U	0.76 U	0.56 U	0.08 J	0.72 U	0.72 U	0.76 U	0.68 U	0.67 U
Chromium	14.5	3.8	5.6	0.29	2.2 U	**6.5**	2.4	2.2 U	2	**35**	2.2	2.1 U	2.9	**18.7**	**25.7**
Cobalt	0.822	--	30	2.3	11 U	0.13 J	9.3 U	11 U	0.04 J	1.3 J	0.12 J	10 U	11 U	0.82 J	0.77 J
Copper	2.56	700	4,100	310	5.4 U	3.7 U	4.7 U	5.4 U	4 U	6.3	5.1 U	5.2 U	5.4 U	4.8 U	4.8 U
Iron	5,439	150	72,000	5,500	290 J	668 J	861 J	450 J	564 J	17,900 J	550 J	937 J	624 J	8,150 J	7,880 J
Lead	8.49	270	800	400	1.3	4.2	1.5	1.2	1.6	9.6	2.8	1.8	2.6	6	7
Magnesium	363	--	--	--	1,100 U	740 U	930 U	1,100 U	810 U	1,200 J	1,000 U	1,000 U	1,100 U	970 U	960 U
Manganese	9.25	65	2,300	180	3.4	5.5	4.3	4.1	12.8	19.9	10.2	6.6	9.2	22.5	29
Mercury	0.071	1	31	2.3	0.14 U	0.04 J	0.02 J	0.16 U	0.17 U	0.22 U	0.15 U	0.13 U	0.02 J	0.13 U	0.17 U
Nickel	2.27	130	2,000	150	8.6 U	5.9 U	0.42 J	0.35 J	6.4 U	4 J	1.4 J	0.61 J	8.7 U	7.8 U	7.7 U
Potassium	361	--	--	--	82.7 J	184 J	930 U	1,100 U	58.8 J	1,610 J	1,000 U	1,000 U	85.4 J	676 J	1,120 J
Selenium	0.505	2.1	510	39	1.1 U	0.36 J	0.93 U	1.1 U	0.06 J	0.55 J	1 U	1 U	0.14 J	0.22 J	0.37 J
Silver	0.129	3.4	510	39	2.2 U	1.5 U	1.9 U	2.2 U	1.6 U	0.1 J	2 U	2.1 U	2.2 U	1.9 U	1.9 U
Thallium	0.38	--	--	--	0.54 U	0.03 J	0.01 J	0.54 U	0.4 U	0.12 J	0.02 J	0.01 J	0.01 J	0.08 J	0.11 J
Vanadium	17.2	--	520	39	11 U	7.4 U	9.3 U	11 U	8.1 U	46.4	10 U	10 U	11 U	27.6	33.6
Zinc	6.59	1,200	31,000	2,300	4.3 U	3 U	3.7 U	4.4 U	3.2 U	23.6	4.1 U	4.1 U	4.4 U	7.3	10

Notes:

Shading indicates exceedance of two times the mean base background concentration for subsurface soil

Bold box indicates exceedance of NC SSLs

Bold text indicates exceedance of Adjusted Industrial Soil RSLs

Underline indicates exceedance of Adjusted Residential Soil RSLs

RSLs were adjusted for noncarcinogens to account for exposure to multiple constituents

NA - Not analyzed

J - Analyte present, value may or may not be accurate or precise

U - The material was analyzed for, but not detected

UJ - Analyte not detected, quantitation limit may be inaccurate

mg/kg - Milligrams per kilogram

µg/kg - Micrograms per kilogram

TABLE A1-3
UXO-02 Subsurface Soil Analytical Results
Site UXO-02, Unnamed Explosive Contaminated Range
PA/SI Report
MCB CamLej
North Carolina

Station ID	**Camp Lejeune Background SB 2X Mean**	**NCSSLs (January, 2010)**	**Adjusted Industrial Soil RSLs (May, 2010)**	**Adjusted Residential Soil RSLs (May, 2010)**	MR02-TW22/IS22	MR02-TW23/IS23	MR02-TW24/IS24	MR02-TW25/IS25	MR02-TW26/IS26	MR02-TW27/IS27	MR02-TW28/IS28	MR02-TW29/IS29	MR02-TW30/IS30
Sample ID					MR02-IS22-2-3-10A	MR02-IS23-1-2-10A	MR02-IS24-4-5-10A	MR02-IS25-4-5-10A	MR02-IS26-1-2-10A	MR02-IS27-2-3-10A	MR02-IS28-2-3-10A	MR02-IS29-4-5-10A	MR02-IS30-3-4-10A
Sample Date					03/22/10	03/26/10	03/26/10	03/26/10	03/26/10	03/25/10	03/25/10	03/25/10	03/25/10
Chemical Name													
Semivolatile Organic Compounds (µg/kg)													
No Detections					NA	NA	NA	NA	NA	NA	NA	NA	NA
Explosives (µg/kg)													
No Detections					NA	NA	NA	NA	NA	NA	NA	NA	NA
Total Metals (mg/kg)													
Aluminum	10,369	--	99,000	7,700	1,310	39.3	4,740	11,700	380	1,970	478	941	3,780
Antimony	0.36	--	41	3.1	2.1 UJ	2 U	1.7 U	2.2 U	2.2 U	2.2 UJ	2 UJ	0.1 J	1.6 UJ
Arsenic	2.12	5.8	1.6	0.39	0.52 U	0.49 U	0.61	**1.7**	0.18 J	0.55 U	0.5 U	0.44 U	0.41 J
Barium	16.6	580	19,000	1,500	2.6 J	39 U	35 U	43 U	44 U	2.3 J	1.4 J	36 U	8.9 J
Cadmium	0.023	3	80	7	0.73 U	0.69 U	0.61 U	0.75 U	0.77 U	0.78 U	0.69 U	0.62 U	0.57 U
Chromium	14.5	3.8	5.6	0.29	2.5	2 U	4	**12.3**	2.2 U	2.4	2 U	1.8 U	2.3
Cobalt	0.822	--	30	2.3	10 U	9.8 U	0.15 J	0.52 J	11 U	11 U	9.9 U	8.9 U	0.1 J
Copper	2.56	700	4,100	310	5.2 U	4.6 U	4.3 U	5.6 U	3.4 U	5.5 U	5 U	4.4 U	4.1 U
Iron	5,439	150	72,000	5,500	263 J	51.7	966	5,550	185	1,430 J	154 J	371 J	1,620 J
Lead	8.49	270	800	400	2.5	0.3 J	2.2	4.4	0.72	1.6	0.8	1.1	5.3
Magnesium	363	--	--	--	1,000 U	920 U	860 U	1,100 U	690 U	1,100 U	990 U	890 U	820 U
Manganese	9.25	65	2,300	180	8.6	2.8 U	3	8.5	2.7	2.4 J	4.8	6.2	9.3
Mercury	0.071	1	31	2.3	0.02 J	0.18 U	0.18 U	0.16 U	0.19 U	0.01 J	0.17 U	0.18 U	0.02 J
Nickel	2.27	130	2,000	150	0.3 J	7.9 U	1.5 J	2.3 J	8.8 U	0.54 J	0.11 J	0.32 J	6.5 U
Potassium	361	--	--	--	1,000 U	980 U	870 U	1,100 U	1,100 U	1,100 U	990 U	890 U	86.2 J
Selenium	0.505	2.1	510	39	0.09 J	0.98 U	0.12 J	0.25 J	0.12 J	0.05 J	0.99 U	0.89 U	0.21 J
Silver	0.129	3.4	510	39	2.1 U	2 U	0.04 J	0.07 J	2.2 U	2.2 U	2 U	1.8 U	1.6 U
Thallium	0.38	--	--	--	0.52 U	0.49 U	0.02 J	0.09 J	0.55 U	0.01 J	0.5 U	0.44 U	0.05 J
Vanadium	17.2	--	520	39	10 U	0.21 J	6.4 J	17.3	0.57 J	11 U	9.9 U	8.9 U	8.2 U
Zinc	6.59	1,200	31,000	2,300	4.2 U	3.9 U	3.5 U	4.3 U	4.4 U	4.4 U	4 U	3.6 U	3.7

Notes:

Shading indicates exceedance of two times the mean base background concentration for subsurface soil

Bold box indicates exceedance of NC SSLs

Bold text indicates exceedance of Adjusted Industrial Soil RSLs

Underline indicates exceedance of Adjusted Residential Soil RSLs

RSLs were adjusted for noncarcinogens to account for exposure to multiple constituents

NA - Not analyzed

J - Analyte present, value may or may not be accurate or precise

U - The material was analyzed for, but not detected

UJ - Analyte not detected, quantitation limit may be inaccurate

mg/kg - Milligrams per kilogram

µg/kg - Micrograms per kilogram

TABLE A1-4
IR69 Subsurface Soil Analytical Results
Site UXO-02, Unnamed Explosive Contaminated Range
PA/SI Report
MCB CamLej
North Carolina

Station ID	**Camp Lejeune Background SB 2X Mean**	**CLEAN NCSSLs (January, 2010)**	**Adjusted Industrial Soil RSLs (May, 2010)**	**Adjusted Residential Soil RSLs (May, 2010)**	MR02-IR69-IS01		MR02-IR69-IS02	MR02-IR69-IS03
Sample ID					MR02-IR69-IS01-5-6-10A	MR02-IR69-IS01D-5-6-10A	MR02-IR69-IS02-05-07-10A	MR02-IR69-IS03-7_5-9_5-10A
Sample Date					03/11/10	03/11/10	03/06/10	03/08/10
Chemical Name								
Semivolatile Organic Compounds (µg/kg)								
No Detections					NA	NA	NA	NA
Explosives (µg/kg)								
No Detections					NA	NA	NA	NA
Total Metals (mg/kg)								
Aluminum	10,369	--	99,000	7,700	4,530	3,510	1,070	6,340
Arsenic	2.12	5.8	1.6	0.39	0.73	0.55	0.21 J	0.91
Barium	16.6	580	19,000	1,500	6.5 J	5.5 J	3.4 J	5.9 J
Chromium	14.5	3.8	5.6	0.29	**6.3**	**6.6**	2 U	**6.5**
Iron	5,439	150	72,000	5,500	2,120	1,960	645	2,470
Lead	8.49	270	800	400	2.4	2.2	2	2.7
Manganese	9.25	65	2,300	180	12	12.9	10.5	5.6
Potassium	361	--	--	--	128 J	90.2 J	38.5 J	207 J
Thallium	0.38	--	--	--	0.03 J	0.02 J	0.5 U	0.03 J
Vanadium	17.2	--	520	39	6.9 J	5.3 J	1.5 J	9.6 J
Zinc	6.59	1,200	31,000	2,300	4.1 U	4.2 U	1.2 J	16.8

Notes:

Shading indicates exceedance of two times the mean base background concentration for subsurface soil

Bold box indicates exceedance of NC SSLs

Bold text indicates exceedance of Adjusted Industrial Soil RSLs

Underline indicates exceedance of Adjusted Residential Soil RSLs

RSLs were adjusted for noncarcinogens to account for exposure to multiple constituents

NA - Not analyzed

J - Analyte present, value may or may not be accurate or precise

U - The material was analyzed for, but not detected

UJ - Analyte not detected, quantitation limit may be inaccurate

mg/kg - Milligrams per kilogram

µg/kg - Micrograms per kilogram

TABLE A1-5
UXO-02 Groundwater Analytical Results
Site UXO-02, Unnamed Explosive Contaminated Range
PA/SI Report
MCB CamLej
North Carolina

Station ID	Camp Lejeune Background GW 2X Mean	NC2LGW (January, 2010)*	Adjusted Tap Water RSLs (May, 2010)	MR02-TW01/IS01	MR02-TW02/IS02	MR02-TW03/IS03	MR02-TW04/IS04	MR02-TW06/IS06	MR02-TW08/IS08	MR02-TW09/IS09	MR02-TW10/IS10	MR02-TW11/IS11	MR02-TW12/IS12	MR02-TW13/IS13	MR02-TW14/IS14	MR02-TW15/IS15		MR02-TW16/IS16
Sample ID				MR02-GW01-10A	MR02-GW02-10A	MR02-GW03-10A	MR02-GW04-10A	MR02-GW06-10A	MR02-GW08-10A	MR02-GW09-10A	MR02-GW10-10A	MR02-GW11-10A	MR02-GW12-10A	MR02-GW13-10A	MR02-GW14-10A	MR02-GW15-10A	MR02-GW15D-10A	MR02-GW16-10A
Sample Date				03/30/10	03/30/10	03/30/10	03/31/10	03/31/10	04/01/10	03/30/10	03/31/10	03/30/10	03/31/10	03/30/10	03/30/10	03/29/10	03/29/10	04/01/10
Chemical Name																		
Semivolatile Organic Compounds (µg/l)																		
No Detections																		
Explosives (µg/l)																		
No Detections																		
Total Metals (µg/l)																		
Aluminum	1,886	--	3,700	343 J	64.6 J	424 J	200 U	**42,000**	**28,400**	1,420 J	**4,150**	1,080 J	**14,100**	**7,270 J**	739 J	203 J	343 J	**8,190**
Antimony	3.28	6	1.5	10 U	10 U	10 U	10 U	10 U	**7 J**	10 U	10 U	10 U	10 U	10 U	10 U	10 U	10 U	10 U
Arsenic	5.77	10	0.045	10 U	10 U	10 U	10 U	**5.5 J**	**6.2 J**	10 U	10 U	10 U	**9.3 J**	10 U	10 U	10 U	10 U	10 U
Barium	86.2	700	730	18.9 J	43.6 J	27.8 J	15.5 J	214	200 U	138 J	19.8 J	29.6 J	105 J	40.4 J	31.7 J	29.8 J	30.5 J	200 U
Calcium	69,078	--	--	23,600 J	11,000 J	17,600 J	11,100	5,000 U	5,000 U	6,110 J	5,000 U	7,630 J	10,400	5,000 UJ	5,000 UJ	5,000 UJ	5,000 UJ	11,100
Chromium	3.13	10	0.043	10 U	10 U	10 U	10 U	**46**	**29.5**	10 U	**10.6**	10 U	**23.3**	10 U	10 U	10 U	10 U	**18.6**
Cobalt	3.4	--	1.1	50 U	50 U	50 U	50 U	**3.2 J**	**2 J**	50 U	50 U	50 U	**10 J**	50 U	50 U	50 U	50 U	**1.5 J**
Copper	2.76	1,000	150	25 U	25 U	25 U	25 U	48.4	27.7	25 U	25 U	25 U	25 U	25 U	25 U	25 U	25 U	26.2
Iron	5,999	300	2,600	440 J	113 J	484 J	100 U	**14,700**	**14,900**	1,540 J	828	581 J	**20,700**	1,900 J	308 J	358 J	364 J	**8,400**
Lead	2.8	15	15	3 U	0.81 J	1.1 J	1.1 J	**24.1**	**19.2**	3 U	2.6 J	3 U	9.3	1.2 J	3 U	1.3 J	3 U	6
Magnesium	6,363	--	--	5,000 UJ	5,000 UJ	5,000 UJ	5,000 U	5,000 U	5,000 U	8,410 J	5,000 U	5,000 UJ	7,650	5,000 UJ	5,000 UJ	5,000 UJ	5,000 UJ	5,000 U
Manganese	214	50	88	35.4	53	64.6	18.9	65.1	39.5	**131**	15 U	15 U	**245**	29.9	20	66.2	71.8	**131**
Mercury	0.1	1	1.1	0.2 U	0.2 U	0.2 U	0.2 U	0.08 J	0.04 J	0.2 U	0.2 U	0.2 U	0.2 U	0.2 U	0.2 U	0.2 U	0.2 U	0.2 U
Nickel	7.97	100	73	40 U	4.2 J	1.4 J	1.7 J	16.6 J	11.5 J	5.8 J	5.9 J	2.4 J	22.7 J	8.9 J	1.3 J	5.4 J	5 J	9.6 J
Potassium	3,277	--	--	738 J	1,150 J	1,580 J	1,290 J	3,750 J	9,040	2,370 J	539 J	355 J	3,230 J	408 J	536 J	386 J	441 J	1,550 J
Selenium	3.14	20	18	5 U	5 U	5 U	5 U	5 U	1.3 J	5 U	5 U	5 U	5 U	5 U	5 U	5 U	5 U	0.56 J
Sodium	22,508	--	--	37,800	39,300	29,200	11,100	5,300	5,000 U	75,000	10,900	21,800	38,000	16,000	5,000 U	5,610	5,500	21,400
Thallium	3.78	2	--	2 U	2 U	2 U	2 U	0.41 J	0.18 J	0.06 J	2 U	2 U	0.18 J	0.06 J	2 U	2 U	2 U	0.07 J
Vanadium	4.72	--	18	0.5 J	50 U	0.55 J	50 U	**49.4 J**	**37.5 J**	1.5 J	4.5 J	1.8 J	**25.8 J**	2.2 J	50 U	50 U	50 U	12.3 J
Zinc	42.1	1,000	1,100	20 U	20 U	20 U	20 U	189	109	20 U	27.7	41.2	136	57.3	20 U	138	142	424
Dissolved Metals (µg/l)																		
Aluminum, Dissolved	1,886	--	3,700	NA	NA	NA	NA	246	927	NA	1,960	NA	1,370	NA	NA	NA	NA	19 J
Antimony, Dissolved	3.28	6	1.5	NA	NA	NA	NA	10 U	10 U	NA	10 U	NA	10 U	NA	NA	NA	NA	10 U
Arsenic, Dissolved	5.77	10	0.045	NA	NA	NA	NA	10 U	10 U	NA	10 U	NA	**4 J**	NA	NA	NA	NA	10 U
Barium, Dissolved	86.2	700	730	NA	NA	NA	NA	37.8 J	200 U	NA	16.5 J	NA	83.9 J	NA	NA	NA	NA	200 U
Calcium, Dissolved	69,078	--	--	NA	NA	NA	NA	5,000 U	5,000 U	NA	5,000 U	NA	10,600	NA	NA	NA	NA	10,500
Cobalt, Dissolved	3.4	--	1.1	NA	NA	NA	NA	50 U	50 U	NA	50 U	NA	**8.6 J**	NA	NA	NA	NA	0.86 J
Iron, Dissolved	5,999	300	2,600	NA	NA	NA	NA	100 U	306	NA	415	NA	**11,400**	NA	NA	NA	NA	**2,710**
Lead, Dissolved	2.8	15	15	NA	NA	NA	NA	3 U	0.8 J	NA	3 U	NA	0.85 J	NA	NA	NA	NA	3 U
Magnesium, Dissolved	6,363	--	--	NA	NA	NA	NA	5,000 U	5,000 U	NA	5,000 U	NA	7,190	NA	NA	NA	NA	5,000 U
Manganese, Dissolved	214	50	88	NA	NA	NA	NA	15 U	15 U	NA	15 U	NA	**209**	NA	NA	NA	NA	**117**
Nickel, Dissolved	7.97	100	73	NA	NA	NA	NA	1.1 J	1.3 J	NA	8 J	NA	19.6 J	NA	NA	NA	NA	5.7 J
Potassium, Dissolved	3,277	--	--	NA	NA	NA	NA	1,360 J	7,390	NA	500 J	NA	2,260 J	NA	NA	NA	NA	902 J
Selenium, Dissolved	3.14	20	18	NA	NA	NA	NA	5 U	5 U	NA	0.72 J	NA	0.89 J	NA	NA	NA	NA	5 U
Sodium, Dissolved	22,508	--	--	NA	NA	NA	NA	5,560	5,000 U	NA	11,300	NA	39,400	NA	NA	NA	NA	22,300
Thallium, Dissolved	3.78	2	--	NA	NA	NA	NA	2 U	2 U	NA	2 U	NA	0.06 J	NA	NA	NA	NA	2 U
Vanadium, Dissolved	4.72	--	18	NA	NA	NA	NA	50 U	0.95 J	NA	2.8 J	NA	6.4 J	NA	NA	NA	NA	50 U
Zinc, Dissolved	42.1	1,000	1,100	NA	NA	NA	NA	72.7	23.9	NA	23.6	NA	114	NA	NA	NA	NA	126

Notes:

Shading indicates exceedance of two times the mean base background concentration for Groundwater

Bold box indicates exceedance of NC2LGW

Bold text indicates exceedance of Adjusted Tap Water RSLs

RSLs were adjusted for noncarcinogens to account for exposure to multiple constituents

* - The MCL-Groundwater value is reported in place of the NC2LGW where the MCL value is more conservative.

NA - Not analyzed

J - Analyte present, value may or may not be accurate or precise

U - The material was analyzed for, but not detected

UJ - Analyte not detected, quantitation limit may be inaccurate

µg/l - Micrograms per liter

TABLE A1-5
UXO-02 Groundwater Analytical Results
Site UXO-02, Unnamed Explosive Contaminated Range
PA/SI Report
MCB CamLej
North Carolina

Station ID	**Camp Lejeune Background GW 2X Mean**	**NC2LGW (January, 2010)***	**Adjusted Tap Water RSLs (May, 2010)**	MR02-TW17/IS17	MR02-TW18/IS18	MR02-TW19/IS19	MR02-TW20/IS20		MR02-TW21/IS21		MR02-TW22/IS22	MR02-TW23/IS23	MR02-TW24/IS24	MR02-TW25/IS25	MR02-TW26/IS26	MR02-TW27/IS27	MR02-TW28/IS28	MR02-TW29/IS29
Sample ID				MR02-GW17-10A	MR02-GW18-10A	MR02-GW19-10A	MR02-GW20-10A	MR02-GW20D-10A	MR02-GW21-10A	MR02-GW21D-10A	MR02-GW22-10A	MR02-GW23-10A	MR02-GW24-10A	MR02-GW25-10A	MR02-GW26-10A	MR02-GW27-10A	MR02-GW28-10A	MR02-GW29-10A
Sample Date				03/30/10	03/31/10	03/29/10	03/29/10	03/29/10	03/29/10	03/29/10	03/29/10	03/30/10	03/31/10	03/31/10	03/30/10	03/31/10	03/31/10	03/31/10
Chemical Name																		
Semivolatile Organic Compounds (µg/l)																		
No Detections																		
Explosives (µg/l)																		
No Detections																		
Total Metals (µg/l)																		
Aluminum	1,886	--	3,700	**55,400 J**	**4,720**	621 J	2,690 J	1,820 J	904 J	530 J	**6,220 J**	550 J	**4,720**	757	**6,890 J**	1,030	1,830	2,590
Antimony	3.28	6	1.5	10 U	**2 J**	10 U	10 U	10 U	10 U	10 U	10 U	10 U	10 U	10 U	10 U	10 U	10 U	10 U
Arsenic	5.77	10	0.045	**5.3 J**	10 U	10 U	10 U	10 U	10 U	10 U	10 U	10 U	**2 J**	10 U	10 U	10 U	10 U	**2.9 J**
Barium	86.2	700	730	139 J	44 J	21.9 J	25.9 J	25.6 J	26.5 J	25.8 J	32.8 J	15.5 J	64 J	53.6 J	30.7 J	25.9 J	8.5 J	43.5 J
Calcium	69,078	--	--	7,120 J	5,000 U	5,000 UJ	5,000 UJ	5,000 UJ	5,000 UJ	5,000 UJ	5,000 UJ	5,000 UJ	5,000 U	5,000 U	5,000 UJ	5,000 U	5,000 U	9,720
Chromium	3.13	10	0.043	**56.8**	10 U	10 U	10 U	10 U	10 U	10 U	10 U	10 U	10 U	10 U	10 U	10 U	10 U	10 U
Cobalt	3.4	--	1.1	50 U	50 U	50 U	50 U	50 U	50 U	50 U	50 U	50 U	**1.5 J**	**1.2 J**	50 U	50 U	50 U	0.87 J
Copper	2.76	1,000	150	25 U	25 U	25 U	25 U	25 U	25 U	25 U	25 U	25 U	25 U	25 U	25 U	25 U	25 U	25 U
Iron	5,999	300	2,600	**14,000 J**	1,580	259 J	712 J	563 J	556 J	426 J	2,120 J	889 J	**4,900**	1,660	**3,200 J**	641	2,170	**5,110**
Lead	2.8	15	15	**22.5**	6.2	3 U	3.6	2.4 J	3 U	3 U	7.3	3 U	3.5	3 U	3.2	1.2 J	3 U	3 J
Magnesium	6,363	--	--	5,000 UJ	5,000 U	5,000 UJ	5,000 UJ	5,000 UJ	5,000 UJ	5,000 UJ	5,000 UJ	5,000 UJ	5,000 U	5,000 U	5,000 UJ	5,000 U	5,000 U	5,000 U
Manganese	214	50	88	63	**132**	37.8	47.2	44.3	15 U	15 U	24.9	15 U	**109**	79.7	26.1	22.8	17.1	**204**
Mercury	0.1	1	1.1	0.2 U	0.2 U	0.2 U	0.2 U	0.2 U	0.2 U	0.2 U	0.2 U	0.2 U	0.2 U	0.2 U	0.2 U	0.2 U	0.2 U	0.2 U
Nickel	7.97	100	73	16.3 J	2 J	3.4 J	1.5 J	1.8 J	0.9 J	1 J	4.4 J	1.4 J	16.7 J	24.5 J	4.8 J	2.1 J	0.46 J	6.6 J
Potassium	3,277	--	--	3,560 J	1,150 J	496 J	759 J	736 J	964 J	934 J	755 J	408 J	1,420 J	802 J	558 J	488 J	280 J	1,550 J
Selenium	3.14	20	18	0.82 J	0.77 J	5 U	0.57 J	5 U	5 U	5 U	5 U	5 U	1.3 J	0.64 J	5 U	5 U	5 U	5 U
Sodium	22,508	--	--	9,150	13,600	5,000 U	10,500	10,000	8,430	8,320	12,400	5,710	10,700	12,400	14,700	7,160	5,780	18,000
Thallium	3.78	2	--	0.3 J	2 U	2 U	2 U	2 U	2 U	2 U	2 U	2 U	0.11 J	2 U	2 U	2 U	2 U	2 U
Vanadium	4.72	--	18	**54.5**	2.6 J	50 U	0.64 J	50 U	1 J	0.57 J	7.6 J	0.69 J	8.2 J	0.7 J	11.5 J	0.83 J	2.5 J	4.5 J
Zinc	42.1	1,000	1,100	31.6	20 U	20 U	20 U	20 U	20 U	20 U	20 U	32.9	174	315	20 U	20 U	20 U	321
Dissolved Metals (µg/l)																		
Aluminum, Dissolved	1,886	--	3,700	145 J	73.8 J	NA	NA	NA	NA	NA	1,280 J	NA	309	114 J	1,290 J	NA	NA	124 J
Antimony, Dissolved	3.28	6	1.5	10 U	10 U	NA	NA	NA	NA	NA	10 U	NA	10 U	10 U	10 U	NA	NA	**1.9 J**
Arsenic, Dissolved	5.77	10	0.045	10 U	10 U	NA	NA	NA	NA	NA	10 U	NA	10 U	10 U	10 U	NA	NA	10 U
Barium, Dissolved	86.2	700	730	23.7 J	24.2 J	NA	NA	NA	NA	NA	15.5 J	NA	55.7 J	59 J	17.8 J	NA	NA	27.1 J
Calcium, Dissolved	69,078	--	--	5,000 UJ	5,000 U	NA	NA	NA	NA	NA	5,000 UJ	NA	5,000 U	5,000 U	5,000 UJ	NA	NA	5,000 U
Cobalt, Dissolved	3.4	--	1.1	50 U	50 U	NA	NA	NA	NA	NA	50 U	NA	0.85 J	1.1 J	50 U	NA	NA	50 U
Iron, Dissolved	5,999	300	2,600	34.2 J	100 U	NA	NA	NA	NA	NA	722 J	NA	1,890	1,040	1,890 J	NA	NA	2,010
Lead, Dissolved	2.8	15	15	3 U	3 U	NA	NA	NA	NA	NA	3.4	NA	1 J	3 U	3 U	NA	NA	3 U
Magnesium, Dissolved	6,363	--	--	5,000 UJ	5,000 U	NA	NA	NA	NA	NA	5,000 UJ	NA	5,000 U	5,000 U	5,000 UJ	NA	NA	5,000 U
Manganese, Dissolved	214	50	88	15.7	65.5	NA	NA	NA	NA	NA	15 U	NA	83.4	82.3	22.2	NA	NA	**103**
Nickel, Dissolved	7.97	100	73	1.7 J	1.1 J	NA	NA	NA	NA	NA	3.5 J	NA	15.3 J	26.8 J	4 J	NA	NA	2.8 J
Potassium, Dissolved	3,277	--	--	1,100 J	931 J	NA	NA	NA	NA	NA	675 J	NA	889 J	745 J	428 J	NA	NA	712 J
Selenium, Dissolved	3.14	20	18	5 U	0.79 J	NA	NA	NA	NA	NA	0.64 J	NA	5 U	1 J	5 J	NA	NA	0.78 J
Sodium, Dissolved	22,508	--	--	7,120	13,200	NA	NA	NA	NA	NA	12,800	NA	10,900	12,300	14,000	NA	NA	10,100
Thallium, Dissolved	3.78	2	--	2 U	2 U	NA	NA	NA	NA	NA	2 U	NA	2 U	2 U	2 U	NA	NA	2 U
Vanadium, Dissolved	4.72	--	18	50 U	50 U	NA	NA	NA	NA	NA	50 U	NA	50 U	50 U	5.6 J	NA	NA	50 U
Zinc, Dissolved	42.1	1,000	1,100	20 U	20 U	NA	NA	NA	NA	NA	20 U	NA	160	332	20 U	NA	NA	48.4

Notes:

Shading indicates exceedance of two times the mean base background concentration for Groundwater

Bold box indicates exceedance of NC2LGW

Bold text indicates exceedance of Adjusted Tap Water RSLs

RSLs were adjusted for noncarcinogens to account for exposure to multiple constituents

* - The MCL-Groundwater value is reported in place of the NC2LGW where the MCL value is more conservative.

NA - Not analyzed

J - Analyte present, value may or may not be accurate or precise

U - The material was analyzed for, but not detected

UJ - Analyte not detected, quantitation limit may be inaccurate

µg/l - Micrograms per liter

TABLE A1-5
UXO-02 Groundwater Analytical Results
Site UXO-02, Unnamed Explosive Contaminated Range
PA/SI Report
MCB CamLej
North Carolina

Station ID	**Camp Lejeune Background GW 2X Mean**	**NC2LGW (January, 2010)***	**Adjusted Tap Water RSLs (May, 2010)**	MR02-TW30/IS30
Sample ID				MR02-GW30-10A
Sample Date				03/31/10
Chemical Name				
Semivolatile Organic Compounds (µg/l)				
No Detections				
Explosives (µg/l)				
No Detections				
Total Metals (µg/l)				
Aluminum	1,886	--	3,700	**3,970**
Antimony	3.28	6	1.5	10 U
Arsenic	5.77	10	0.045	10 U
Barium	86.2	700	730	59.5 J
Calcium	69,078	--	--	8,510
Chromium	3.13	10	0.043	**14.6**
Cobalt	3.4	--	1.1	**1.5 J**
Copper	2.76	1,000	150	25 U
Iron	5,999	300	2,600	**4,410**
Lead	2.8	15	15	3.2
Magnesium	6,363	--	--	5,000 U
Manganese	214	50	88	62
Mercury	0.1	1	1.1	0.2 U
Nickel	7.97	100	73	3.7 J
Potassium	3,277	--	--	2,920 J
Selenium	3.14	20	18	5 U
Sodium	22,508	--	--	30,600
Thallium	3.78	2	--	0.07 J
Vanadium	4.72	--	18	11.5 J
Zinc	42.1	1,000	1,100	140
Dissolved Metals (µg/l)				
Aluminum, Dissolved	1,886	--	3,700	30.3 J
Antimony, Dissolved	3.28	6	1.5	10 U
Arsenic, Dissolved	5.77	10	0.045	10 U
Barium, Dissolved	86.2	700	730	56.2 J
Calcium, Dissolved	69,078	--	--	8,580
Cobalt, Dissolved	3.4	--	1.1	0.9 J
Iron, Dissolved	5,999	300	2,600	182
Lead, Dissolved	2.8	15	15	3 U
Magnesium, Dissolved	6,363	--	--	5,000 U
Manganese, Dissolved	214	50	88	56.2
Nickel, Dissolved	7.97	100	73	4.7 J
Potassium, Dissolved	3,277	--	--	2,480 J
Selenium, Dissolved	3.14	20	18	0.59 J
Sodium, Dissolved	22,508	--	--	33,000
Thallium, Dissolved	3.78	2	--	2 U
Vanadium, Dissolved	4.72	--	18	50 U
Zinc, Dissolved	42.1	1,000	1,100	22.9

Notes:
Shading indicates exceedance of two times the mean base background concentration for Groundwater
Bold box indicates exceedance of NC2LGW
Bold text indicates exceedance of Adjusted Tap Water RSLs
RSLs were adjusted for noncarcinogens to account for exposure to multiple constituents
* - The MCL-Groundwater value is reported in place of the NC2LGW where the MCL value is more conservative.
NA - Not analyzed
J - Analyte present, value may or may not be accurate or precise
U - The material was analyzed for, but not detected
UJ - Analyte not detected, quantitation limit may be inaccurate
µg/l - Micrograms per liter

TABLE A1-6
IR69 Groundwater Analytical Results
Site UXO-02, Unnamed Explosive Contaminated Range
PA/SI Report
MCB CamLej
North Carolina

Station ID	**Camp Lejeune Background GW 2X Mean**	**NC2LGW (January, 2010)**	**Adjusted Tap Water RSLs**	MR02-IR69-MW05		MR02-IR69-MW09	MR02-IR69-MW11	MR02-IR69-MW12	MR02-IR69-MW13	MR02-IR69-MW14	MR02-IR69-MW15
Sample ID				MR02-IR69-GW05-10A	MR02-IR69-GW05D-10A	MR02-IR69-GW09-10A	MR02-IR69-GW11-10A	MR02-IR69-GW12-10A	MR02-IR69-GW13-10A	MR02-IR69-GW14-10A	MR02-IR69-GW15-10A
Sample Date				03/08/10	03/08/10	03/01/10	03/01/10	02/27/10	03/01/10	02/28/10	03/07/10
Chemical Name											
Semivolatile Organic Compounds (µg/l)											
No Detections				NA	NA	NA	NA	NA	NA	NA	NA
Explosives (µg/l)											
No Detections				NA	NA	NA	NA	NA	NA	NA	NA
Total Metals (µg/l)											
Aluminum	1,886	--	3,700	200 U	200 U	1,280 J	835 J	458 J	1,010 J	294 J	723
Arsenic	5.77	10	0.045	10 U	10 U	10 U	10 U	**2.4 J**	10 U	10 U	**5.6 J**
Barium	86.2	700	730	200 U	200 U	200 U	200 U	200 U	200 U	200 U	67.5 J
Calcium	69,078	--	--	5,000 U	5,000 U	5,190	5,000 U	5,000 U	5,000 U	5,000 U	63,300
Chromium	3.13	10	0.043	10 U	10 U	**1.9 J**	**0.62 J**	**0.65 J**	**0.73 J**	10 U	**1.7 J**
Cobalt	3.4	--	1.1	50 U	50 U	**2 J**	0.83 J	0.47 J	0.29 J	50 U	50 U
Copper	2.76	1,000	150	25 U	25 U	5.7 J	25 U	25 U	25 U	25 U	25 U
Iron	5,999	300	2,600	86.6 J	125	1,360 J	220 J	**5,460 J**	1,380 J	237 J	**30,800**
Lead	2.8	15	15	3 U	3 U	1.8 J	1.7 J	3 U	3 U	3 U	3 U
Manganese	214	50	88	38.3 J	24.6 J	38.8	5 J	19.2	9.3 J	15	**802**
Potassium	3,277	--	--	5,000 U	5,000 U	846 J	414 J	478 J	5,000 U	202 J	5,000 U
Sodium	22,508	--	--	5,000 U	5,000 U	12,800	10,200	8,760	6,360	6,880	24,100
Vanadium	4.72	--	18	50 U	50 U	1.6 J	50 U	0.97 J	1.8 J	0.38 J	1 J
Zinc	42.1	1,000	1,100	20 U	20 U	20 U	20 U	63.5	20 U	20 U	20 U
Dissolved Metals (µg/l)											
Aluminum, Dissolved	1,886	--	3,700	74.2 J	47.1 J	25.8 J	816	283	468	146 J	368
Calcium, Dissolved	69,078	--	--	5,000 U	5,000 U	5,000 U	5,000 U	5,000 U	5,000 U	5,000 U	60,400
Chromium, Dissolved	3.13	10	0.043	10 U	10 U	10 U	**0.64 J**	**0.71 J**	**0.74 J**	**0.44 J**	**1.4 J**
Cobalt, Dissolved	3.4	--	1.1	50 U	50 U	**1.6 J**	0.55 J	50 U	50 U	50 U	50 U
Iron, Dissolved	5,999	300	2,600	38.4 J	100 U	100 U	109	**5,090**	1,150	100 U	**27,800**
Lead, Dissolved	2.8	15	15	3 U	3 U	3 U	1.2 J	3 U	3 U	3 U	1.2 J
Manganese, Dissolved	214	50	88	35.8 J	23.3 J	35.5	4.4 J	20.6	9.6 J	15.1	**763**
Potassium, Dissolved	3,277	--	--	5,000 U	5,000 U	768 J	394 J	496 J	5,000 U	149 J	5,000 U
Sodium, Dissolved	22,508	--	--	5,000 U	5,000 U	13,200	10,300	9,050	6,380	6,970	23,000
Vanadium, Dissolved	4.72	--	18	50 U	50 U	50 U	50 U	0.83 J	1.2 J	50 U	0.42 J
Zinc, Dissolved	42.1	1,000	1,100	7.3 J	4.9 J	20 U	20 U	87.5	20 U	20 U	7.7 J

Notes:

Shading indicates exceedance of two times the mean base background concentration for Groundwater

Bold box indicates exceedance of NC2LGW

Bold text indicates exceedance of Adjusted Tap Water RSLs

RSLs were adjusted for noncarcinogens to account for exposure to multiple constituents

NA - Not analyzed

J - Analyte present, value may or may not be accurate or precise

U - The material was analyzed for, but not detected

UJ - Analyte not detected, quantitation limit may be inaccurate

µg/l - Micrograms per liter

TABLE A1-7
UXO-02 Sediment Analytical Results
Site UXO-02, Unnamed Explosive Contaminated Range
PA/SI Report
MCB CamLej
North Carolina

Station ID	**Adjusted Industrial Soil RSLs (May, 2010)**	**Adjusted Residential Soil RSLs (May, 2010)**	MR02-SD01/SW01	MR02-SD02/SW02	MR02-SD03/SW03	MR02-SD04/SW04	MR02-SD05/SW05		MR02-SD06/SW06	MR02-SD07/SW07	MR02-SD08/SW08	MR02-SD09/SW09	MR02-SD10/SW10
Sample ID			MR02-SD01-10A	MR02-SD02-10A	MR02-SD03-10A	MR02-SD04-10A	MR02-SD05-10A	MR02-SD05D-10A	MR02-SD06-10A	MR02-SD07-10A	MR02-SD08-10A	MR02-SD09-10A	MR02-SD10-10A
Sample Date			02/09/10	02/09/10	02/08/10	02/09/10	02/08/10	02/08/10	02/09/10	02/08/10	02/09/10	02/09/10	02/09/10
Chemical Name													
Semivolatile Organic Compounds (µg/kg)													
No Detections			NA	NA	NA	NA	NA	NA	NA	NA	NA	NA	NA
Explosives (µg/kg)													
Perchlorate	72,000	5,500	8.2	12	13	10	14	16	19	2.8	7.3	10	7
Total Metals (mg/kg)													
Aluminum	99,000	7,700	31,400	19,100	24,300	8,730	19,800	24,200	9,490	2,400	11,000	14,400	4,630
Arsenic	1.6	0.39	**5.8**	**3.2**	**4.2**	1.2 J	**3.5**	**3.3**	1.2 J	0.49 J	**2.5**	**2.8**	1 J
Beryllium	200	16	0.59 J	0.36 J	0.56 J	0.47 J	0.44 J	0.52 J	1.1 J	0.03 J	0.23 J	0.36 J	0.07 J
Calcium	--	--	3,400 U	5,400 U	7,220	5,000 U	6,130	6,470	6,970	3,090	2,800 U	3,400 U	3,400 U
Chromium	5.6	0.29	**39.7**	**23.4**	**27.3**	10 U	**22.1**	**27.4**	14 U	3.4	**14.7**	**17**	6.9 U
Cobalt	30	2.3	34 U	1.5 J	2 J	0.88 J	41 U	54 U	69 U	0.36 J	1 J	1.2 J	0.46 J
Iron	72,000	5,500	16,800	11,100	10,900	2,180	11,200	13,100	3,880	1,220	6,320	6,960	1,850
Lead	800	400	14.4	17	19.4	24.5	17.2	19.8	14.9	3.5	8.9	10.2	13.7
Magnesium	--	--	4,210	5,980	7,930	5,000 U	6,050	6,740	6,900 U	1,000 U	2,800 U	3,400 U	3,400 U
Manganese	2,300	180	38 J	33.7 J	49.7 J	16.3 J	71.4 J	80.2 J	30 J	16.8 J	27.8 J	19.2 J	13.6 J
Sodium	--	--	9,830	13,200	18,000	5,000 U	16,600	18,600	6,900 U	1,000 U	2,800 U	3,480	3,400 U
Vanadium	520	39	47.7	32.5 J	34 J	10 J	31.5 J	36.9 J	10.2 J	3.7 J	17.9 J	20.9 J	7.4 J
Zinc	31,000	2,300	37	24	37.7	31.2	43.3	48.9	33.4	25.8	15	17.5	14 U

Notes:

Bold text indicates exceedance of Adjusted Industrial Soil RSLs

Underline indicates exceedance of Adjusted Residential Soil RSLs

RSLs were adjusted for noncarcinogens to account for exposure to multiple constituents

NA - Not analyzed

J - Analyte present, value may or may not be accurate or precise

U - The material was analyzed for, but not detected

UJ - Analyte not detected, quantitation limit may be inaccurate

mg/kg - Milligrams per kilogram

µg/kg - Micrograms per kilogram

TABLE A1-8
UXO-02 Surface Water Analytical Results
Site UXO-02, Unnamed Explosive Contaminated Range
PA/SI Report
MCB CamLej
North Carolina

Station ID	**NC2B-SW-Human Health & Water Supply 1**	**NRWQC-Human Health - Organisms & Water + Organisms 2**	**Adjusted Tap Water RSLs (May, 2010)**	MR02-SD01/SW01	MR02-SD02/SW02	MR02-SD03/SW03	MR02-SD04/SW04	MR02-SD05/SW05		MR02-SD06/SW06	MR02-SD07/SW07	MR02-SD08/SW08	MR02-SD09/SW09	MR02-SD10/SW10
Sample ID				MR02-SW01-10A	MR02-SW02-10A	MR02-SW03-10A	MR02-SW04-10A	MR02-SW05-10A	MR02-SW05D-10A	MR02-SW06-10A	MR02-SW07-10A	MR02-SW08-10A	MR02-SW09-10A	MR02-SW10-10A
Sample Date				02/09/10	02/09/10	02/08/10	02/09/10	02/08/10	02/08/10	02/09/10	02/08/10	02/09/10	02/09/10	02/09/10
Chemical Name														
Semivolatile Organic Compounds (µg/l)														
No Detections				NA	NA	NA	NA	NA	NA	NA	NA	NA	NA	NA
Explosives (µg/l)														
No Detections				NA	NA	NA	NA	NA	NA	NA	NA	NA	NA	NA
Total Metals (µg/l)														
Aluminum	--	--	3,700	683	803	368	255	1,960 J	1,330 J	200 U	449	200 U	674	216
Arsenic	10	0.018	0.045	**1.6 J**	**1.3 J**	**1.6 J**	10 U	**1.3 J**	**3.1 J**	10 U	10 U	**1.5 J**	10 U	10 U
Barium	1,000	1,000	730	9.8 J	200 U	17.1 J	20.7 J	18.7 J	17.5 J	18.7 J	24.8 J	15.6 J	12.2 J	6.9 J
Calcium	--	--	--	25,600	34,700	6,970	5,000 U	34,700	35,000	5,000 U	10,200	8,200	7,080	5,000 U
Chromium	--	100	0.043	10 U	10 U	10 U	10 U	10 U	10 U	10 U	10 U	10 U	0.47 J	10 U
Cobalt	--	--	1.1	50 U	0.38 J	50 U	0.42 J	0.33 J	0.37 J	50 U	0.67 J	50 U	0.41 J	50 U
Iron	--	300	2,600	**464**	**800**	252	125	**1,080**	**926**	100 U	**979**	100 U	**2,140**	**429**
Lead	--	--	15	3 U	3 U	3 U	3 U	3 U	3 U	1.3 J	3 U	3 U	3 U	1.1 J
Magnesium	--	--	--	67,600	89,200	13,500	10,300	48,000	49,500	5,000 U	5,000 U	9,030	12,800	5,000 U
Manganese	200	50	88	6 J	8.6 J	11.7 J	7.3 J	**55.4**	**53.4**	6.2 J	**52.5**	4.6 J	20.6	5.8 J
Nickel	25	610	73	40 U	40 U	0.58 J	40 U	40 U	40 U	40 U	1.4 J	40 U	40 U	40 U
Potassium	--	--	--	22,700	33,200	4,820 J	3,800 J	16,900	17,300	1,140 J	1,030 J	2,920 J	5,000 U	1,050 J
Selenium	--	50	18	1.4 J	2.9 J	5 U	5 U	1.2 J	1 J	5 U	5 U	5 U	5 U	5 U
Sodium	--	--	--	532,000	689,000	124,000	100,000	409,000	411,000	20,500	9,170	77,800	130,000	24,500
Vanadium	--	--	18	1.3 J	50 U	0.78 J	0.45 J	3 J	2.1 J	50 U	0.68 J	0.44 J	50 U	0.64 J
Zinc	--	7,400	1,100	2.3 J	20 U	2.6 J	13.1 J	6.7 J	6.3 J	3.8 J	39.9	8.5 J	3.6 J	8.5 J
Dissolved Metals (µg/l)														
Aluminum, Dissolved	--	--	3,700	200 U	200 U	200 U	268	200 U	200 U	200 U	309	200 U	511	200 U
Arsenic, Dissolved	10	0.018	0.045	10 U	**3.2 J**	10 U	10 U	**1.7 J**	**1.3 J**	10 U	10 U	10 U	10 U	**2.2 J**
Barium, Dissolved	1,000	1,000	730	200 U	200 U	16.2 J	23.2 J	16.6 J	16.1 J	17.9 J	23.7 J	11.8 J	11.5 J	6.7 J
Calcium, Dissolved	--	--	--	24,000	32,800	7,740	5,270	33,200	33,100	5,000 U	10,000	8,260	6,850	5,000 U
Cobalt, Dissolved	--	--	1.1	50 U	50 U	50 U	0.43 J	0.32 J	50 U	50 U	0.72 J	50 U	0.43 J	50 U
Copper, Dissolved	--	1,300	150	25 U	25 U	25 U	25 U	25 U	25 U	25 U	25 U	25 U	3.2 J	25 U
Iron, Dissolved	--	300	2,600	202	**354**	101	130	255	258	100 U	**706**	100 U	**1,420**	241
Lead, Dissolved	--	--	15	3 U	3 U	3 U	5.2	3 U	3 U	2 J	3 U	3 U	3 U	1.4 J
Magnesium, Dissolved	--	--	--	63,300	84,700	16,100	11,300	45,900	46,600	5,000 U	5,000 U	8,980	12,100	5,000 U
Manganese, Dissolved	200	50	88	5.3 J	6.9 J	13.7 J	9.1 J	**52.3**	**51.3**	6.1 J	**54.4**	4.6 J	20.6	7.1 J
Nickel, Dissolved	25	610	73	40 U	40 U	40 U	40 U	40 U	40 U	40 U	1.3 J	40 U	40 U	40 U
Potassium, Dissolved	--	--	--	21,300	32,100	5,310	4,250 J	16,200	16,500	1,000 J	978 J	3,040 J	5,000 U	913 J
Selenium, Dissolved	--	50	18	1.5 J	1.9 J	5 U	5 U	5 U	5 U	5 U	5 U	5 U	0.9 J	5 U
Sodium, Dissolved	--	--	--	507,000	670,000	142,000	110,000	394,000	395,000	19,800	9,190	77,500	125,000	24,800
Vanadium, Dissolved	--	--	18	50 U	50 U	50 U	0.46 J	1 J	0.78 J	0.44 J	0.51 J	0.37 J	50 U	50 U
Zinc, Dissolved	--	7,400	1,100	20 U	20 U	5.9 J	15.6 J	10.7 J	10.8 J	5.5 J	38.6	16.7 J	13.4 J	11.7 J

Notes:

Bold box indicates exceedance of NC2B-SW-Human Health + Water Supply

Bold text indicates exceedance of NRWQC-Human Health - Water+ Organisms

Underline indicates exceedance of Adjusted Tap Water RSLs

RSLs were adjusted for noncarcinogens to account for exposure to multiple constituents

1 - NC2B-SW-Human Health and NC2B-SW-Water Supply were combined to show the most conservative criteria

2 - NRWQC-Human Health - Water+ Organisms and NRWQC-Human Health Organisms were combined to show the most conservative criteria

NA - Not analyzed

J - Analyte present, value may or may not be accurate or precise

U - The material was analyzed for, but not detected

µg/l - Micrograms per liter

TABLE A2-1
Surface Soil Analytical Results
Supplemental Investigation Site 69, Operable Unit No. 14
MCB CamLej, North Carolina

Station ID	Camp Lejeune Background SS 2X Mean	NCSSLs (January, 2010)	Adjusted Industrial Soil RSLs (June, 2011)	Adjusted Residential Soil RSLs (June 2011)	IR69-IS01		IR69-IS02	IR69-IS03	IR69-IS04	IR69-IS05	IR69-IS06	MR02-IR69-SS01		MR02-IR69-SS02	MR02-IR69-SS04	MR02-IR69-SS05	MR02-IR69-SS06
Sample ID					IR69-SS01-10A	IR69-SS01D-10A	IR69-SS02-10A	IR69-SS03-10A	IR69-SS04-10A	IR69-SS05-10A	IR69-SS06-10A	MR02-IR69-SS01-10A	MR02-IR69-SS01D-10A	MR02-IR69-SS02-10A	MR02-IR69-SS04-10A	MR02-IR69-SS05-10A	MR02-IR69-SS06-10A
Sample Date					03/04/10	03/04/10	02/28/10	03/04/10	03/04/10	03/04/10	03/04/10	03/04/10	03/04/10	03/13/10	03/13/10	03/13/10	03/13/10
Chemical Name																	
Volatile Organic Compounds (µg/kg)																	
1,2,4-Trichlorobenzene	--	2,200	27,000	6,200	6.2 U	6.3 U	3.7 U	5.5 U	6.2 U	8.5 U	7.1 U	5.6 U	6.6 U	340 U	5.4 UJ	4.7 UJ	1.1 J
2-Butanone	--	16,000	20,000,000	2,800,000	25 J	23 J	9.2 U	14 U	110 J	27 J	18 UJ	14 U	16 U	850 U	13 U	12 R	31 UJ
Acetone	--	24,000	63,000,000	6,100,000	410 J	560 J	93	230 J	470 J	840	520 J	360 J	390 J	850 U	210 J	420 J	730 J
Cyclohexane	--	--	120,000	120,000	6.2 U	6.3 U	3.7 U	5.5 U	6.2 U	8.5 U	7.1 U	5.6 U	6.6 U	340 U	0.44 J	0.44 J	13 UJ
Ethylbenzene	--	8,100	27,000	5,400	6.2 U	6.3 U	3.7 U	5.5 U	3.3 J	8.5 U	7.1 U	5.6 U	6.6 U	340 U	5.4 UJ	4.7 UJ	13 UJ
m- and p-Xylene	--	6,000	250,000	59,000	12 U	13 U	7.3 U	11 U	11 J	17 U	14 U	11 U	13 U	680 U	11 UJ	9.4 UJ	25 UJ
Methyl acetate	--	--	29,000,000	7,800,000	110 J	230 J	87	5.2 J	27 J	170	18 J	9.9 J	54 J	710	4.7 J	35 J	350
Toluene	--	5,500	820,000	500,000	6.2 U	6.3 U	3.7 U	5.5 U	58	8.5 U	7.1 U	8.8 U	6.6 U	340 U	5.4 U	4.7 U	13 U
Xylene, total	--	6,000	260,000	63,000	6.2 U	6.3 U	3.7 U	5.5 U	14 J	8.5 U	7.1 U	5.6 U	6.6 U	340 U	5.4 UJ	4.7 UJ	13 UJ
Semivolatile Organic Compounds (µg/kg)																	
2-Methylnaphthalene	--	1,600	370,000	31,000	1.9 J	1.4 J	9.5 U	2.2 J	1.8 J	1.6 J	1.2 J	1.9 J	1.4 J	2 J	11 U	1.9 J	3.6 J
Acenaphthene	--	8,400	3,300,000	340,000	1 J	13 U	9.5 U	1.9 J	1.5 J	16 U	4.6 J	2.1 J	1.8 J	0.8 J	1.8 J	2.3 J	1.5 J
Acenaphthylene	--	11,000	3,300,000	340,000	13 U	13 U	9.5 U	11 U	11 U	16 U	12 U	11 U	0.93 J	10 U	1.1 J	9.9 U	1.1 J
Anthracene	--	660,000	17,000,000	1,700,000	13 U	1.2 J	9.5 U	1.6 J	0.99 J	16 U	1.6 J	1.4 J	1.1 J	0.68 J	1.6 J	9.9 U	1.7 J
Benzaldehyde	--	--	1,200,000	780,000	100 J	59 J	38 J	86 J	62 J	82 J	140 J	110 J	78 J	74 J	91 J	36 J	170 J
Benzo(a)anthracene	--	180	2,100	150	2.6 J	3 J	1.2 J	11 U	0.88 J	2.4 J	12 U	1.8 J	3.2 J	3 J	2.1 J	1 J	0.81 J
Benzo(a)pyrene	--	59	210	15	1.6 J	1.5 J	3.2 J	1.8 J	1.9 J	1.4 J	1.9 J	4.1 J	3.7 J	1.8 J	7.3 J	1.6 J	1.8 J
Benzo(b)fluoranthene	--	600	2,100	150	1.4 J	2.5 J	3 J	3.2 J	2.1 J	2.1 J	5.7 J	2.1 J	2 J	3.2 J	4.9 J	2.7 J	6.2 J
Benzo(g,h,i)perylene	--	360,000	1,700,000	170,000	0.7 J	1.1 J	1.8 J	11 U	11 U	16 U	0.64 J	0.82 J	0.62 J	10 U	11 U	9.9 U	1.7 J
Benzo(k)fluoranthene	--	5,900	21,000	1,500	1.8 J	2.7 J	2 J	3.3 J	2.3 J	1.8 J	3.2 J	2 J	1.8 J	2.8 J	3.9 J	1.9 J	3.3 J
bis(2-Ethylhexyl)phthalate	--	7,200	120,000	35,000	260 U	260 U	200 U	230 U	230 U	330 U	250 U	220 U	220 U	200 U	200 J	200 U	310
Caprolactam	--	18,000	31,000,000	3,100,000	260 U	260 U	200 UJ	230 U	230 U	81 J	250 U	220 U	220 U	200 U	220 U	200 U	210 U
Chrysene	--	18,000	210,000	15,000	1.9 J	2.9 J	2.5 J	1.3 J	1.6 J	2.2 J	12 U	1.8 J	2.1 J	3 J	4.2 J	2.6 J	3.4 J
Fluoranthene	--	330,000	2,200,000	230,000	2.4 J	5.8 J	3.2 J	11 U	2.6 J	4.7 J	12 U	11 U	3.9 J	4.1 J	5.7 J	3.9 J	4 J
Fluorene	--	56,000	2,200,000	230,000	13 U	0.83 J	9.5 U	11 U	0.86 J	16 U	12 U	1.2 J	0.99 J	0.59 J	1.1 J	0.56 J	10 U
Indeno(1,2,3-cd)pyrene	--	2,000	2,100	150	0.84 J	1.4 J	2.1 J	11 U	0.75 J	1.1 J	1 J	1.2 J	0.97 J	0.86 J	11 U	9.9 U	2.1 J
Naphthalene	--	210	18,000	3,600	2.6 J	1.9 J	9.5 U	3.2 J	2.6 J	1.7 J	2 J	2.6 J	1.7 J	10 U	11 U	9.9 U	10 U
Phenanthrene	--	57,000	17,000,000	1,700,000	2.8 J	4.3 J	3.4 J	3.8 J	3.1 J	3.1 J	3.6 J	3 J	3.9 J	3.2 J	5.5 J	4.4 J	6 J
Pyrene	--	220,000	1,700,000	170,000	1.6 J	4.4 J	2.7 J	1.2 J	2 J	3.6 J	12 U	2 J	3.5 J	3.5 J	4.4 J	2.8 J	2.7 J
Pesticide/Polychlorinated Biphenyls (µg/kg)																	
4,4'-DDD	--	240	7,200	2,000	25 UJ	3.5 NJ	3.8 U	1.4 NJ	8.9 UJ	1.9 NJ	1.2 NJ	21 UJ	2.7 NJ	20 U	21 U	1.9 NJ	2 NJ
4,4'-DDE	--	--	5,100	1,400	99 NJ	110 NJ	1.7 NJ	2 NJ	3.8 NJ	1.3 NJ	1.8 NJ	73 NJ	73 NJ	56 NJ	2.5 NJ	22 NJ	2.9 NJ
4,4'-DDT	--	340	7,000	1,700	45 J	56 J	3.8 R	1.6 J	1.7 J	4.8 J	3.7 J	36 J	39 J	24 J	4.6 J	15 J	3.3 J
Aldrin	--	--	100	29	1.8 J	13 U	2	4.7 U	0.49 J	1.2 J	2 J	11 U	11 U	10 U	11 U	0.22 J	1 J
alpha-BHC	--	1.2	270	77	13 UJ	13 UJ	2 U	4.7 UJ	2.8 J	3.3 UJ	3.1 J	1.4 J	3.3 J	10 U	11 U	0.58 J	3.1 J
alpha-Chlordane	--	68	6,500	1,600	1.5 J	13 U	1.4 J	4.7 U	0.8 J	1.1 J	0.61 J	1.8 J	2.5 J	10 J	11 U	1.2 J	2 J
beta-BHC	--	1.2	960	270	6.4 UJ	6.4 UJ	0.98 U	2.3 UJ	2.3 UJ	1.6 UJ	2.5 UJ	5.5 UJ	5.5 UJ	2 J	5.5 U	1 U	1.1 U
delta-BHC	--	1.2	960	270	13 UJ	13 UJ	2 U	0.55 J	4.6 UJ	3.3 UJ	4.9 UJ	11 UJ	11 UJ	2.1 J	11 UJ	0.98 J	1.2 J
Endosulfan I	--	5,600	370,000	37,000	13 U	13 U	2 U	2.3 J	0.75 J	3.3 U	4.9 U	11 U	11 U	10 U	1.5 J	0.27 J	1.7 J
Endosulfan II	--	5,600	370,000	37,000	25 U	25 U	3.8 U	9 U	8.9 U	6.3 U	1.9 J	21 U	21 U	20 U	21 U	1.2 J	4.1 U
Endosulfan sulfate	--	5,600	370,000	37,000	11 J	9.7 J	2.8 J	30 J	8.1 J	26 J	25	21 U	17 J	12 J	43 J	3.8 J	11 J
Endrin	--	810	18,000	1,800	25 U	25 U	3.8 U	9 U	8.9 U	3.9 J	9.6 U	21 U	21 U	20 U	21 U	0.87 J	1.5 J
Endrin aldehyde	--	810	18,000	1,800	25 U	25 U	3.8 U	9 U	25	3.1 J	9.6 U	21 U	21 U	20 U	21 U	2.2 J	3.1 J
Endrin ketone	--	810	18,000	1,800	13 J	18 J	3.8 UJ	6.5 J	11 J	9.7 J	3.2 J	7.2 J	20 J	11 J	9 J	2.5 J	5.2 J
gamma-BHC (Lindane)	--	1.8	2,100	520	13 U	13 U	2 U	4.7 U	8.4	3.3 U	1.8 J	11 U	11 U	10 U	1.4 J	2 U	1.6 J
gamma-Chlordane	--	68	6,500	1,600	13 U	13 U	2 U	4.7 U	1.3 J	1.9 J	0.96 J	11 U	11 U	2.1 J	3.9 J	2.2 J	2.5 J
Heptachlor	--	6.6	380	110	13 U	13 U	1.4 J	0.52 J	4.6 U	1.1 J	1.4 J	11 U	11 U	1.5 J	11 U	2 U	1.1 J
Heptachlor epoxide	--	0.82	190	53	13 U	13 U	2 U	4.7 U	4.6 U	3.3 U	4.9 U	11 U	11 U	10 U	11 U	2 U	1.6 J
Methoxychlor	--	22,000	310,000	31,000	130 UJ	130 UJ	20 UJ	47 UJ	11 J	4.9 J	49 UJ	110 UJ	110 UJ	100 UJ	110 UJ	20 UJ	21 UJ

TABLE A2-1
Surface Soil Analytical Results
Supplemental Investigation Site 69, Operable Unit No. 14
MCB CamLej, North Carolina

Station ID	**Camp Lejeune Background SS 2X Mean**	**NCSSLs (January, 2010)**	**Adjusted Industrial Soil RSLs (June, 2011)**	**Adjusted Residential Soil RSLs (June 2011)**	IR69-IS01		IR69-IS02	IR69-IS03	IR69-IS04	IR69-IS05	IR69-IS06	MR02-IR69-SS01		MR02-IR69-SS02	MR02-IR69-SS04	MR02-IR69-SS05	MR02-IR69-SS06
Sample ID					IR69-SS01-10A	IR69-SS01D-10A	IR69-SS02-10A	IR69-SS03-10A	IR69-SS04-10A	IR69-SS05-10A	IR69-SS06-10A	MR02-IR69-SS01-10A	MR02-IR69-SS01D-10A	MR02-IR69-SS02-10A	MR02-IR69-SS04-10A	MR02-IR69-SS05-10A	MR02-IR69-SS06-10A
Sample Date					03/04/10	03/04/10	02/28/10	03/04/10	03/04/10	03/04/10	03/04/10	03/04/10	03/04/10	03/13/10	03/13/10	03/13/10	03/13/10
Total Metals (mg/kg)																	
Aluminum	5,487	--	99,000	7,700	6,200	5,700	1,100	230	1,310	6,390	3,590	3,550	3,760	2,970	1,480	1,320	1,460
Antimony	0.447	--	41	3.1	0.47 J	1.4 U	1.1 J	1.4 U	1.3 U	1.9 U	1.4 U	2 UJ	2.7 UJ	2.2 UJ	2.5 UJ	2 UJ	2.4 UJ
Arsenic	0.626	5.8	1.6	0.39	1.3 J	0.76 J	1.1 U	1.4 U	1.3 U	1.9 U	1.4 U	0.45 J	0.44 J	0.45 J	0.51 J	0.24 J	0.42 J
Barium	14.5	580	19,000	1,500	29 J	26.9 J	4.6 J	2.8 J	10.3 J	64.5	31	30.8 J	29.6 J	13.7 J	21.4 J	6.9 J	5 J
Beryllium	0.103	--	200	16	0.12 J	0.1 J	0.57 U	0.69 U	0.66 U	0.15 J	0.08 J	0.98 U	1.3 U	1.1 U	1.2 U	1 U	1.2 U
Cadmium	0.033	3	80	7	0.09 J	0.07 J	0.57 U	0.69 U	0.66 U	0.97 U	0.7 U	0.69 U	0.94 U	0.76 U	0.87 U	0.7 U	0.85 U
Calcium	6,360	--	--	--	1,030 J	1,490 J	572 UJ	356 J	547 J	3,860	1,120	980 U	1,300 U	1,100 U	1,200 U	1,000 U	1,200 U
Chromium	6.05	3.8	5.6	0.29	**8.8**	**8**	0.96 J	0.55 J	1.8	4.4	2.2	2.2	2.7 U	2.3	2.5 U	2 U	2.4 U
Cobalt	0.294	--	30	2.3	0.5 J	0.44 J	0.57 U	0.69 U	0.66 U	0.15 J	0.12 J	9.8 U	13 U	11 U	12 U	10 U	12 U
Copper	4.83	700	4,100	310	4	4.9	0.9	2.1	1.3	3.8	2.8	4.9 U	6.7 U	5.4 U	6.2 U	5 U	6.1 U
Iron	3,245	150	72,000	5,500	4,960	4,090	606	174	544	2,160	909	1,030	1,110	977	559	587	797
Lead	12.3	270	800	400	8.8	7.5	3.9	2.3	6.8	15.9	8	7.4	7.7	8.4	5.3	2.9	3.2
Magnesium	238	--	--	--	468 J	473 J	572 U	76.8 J	107 J	551 J	248 J	980 U	1,300 U	1,100 U	1,200 U	1,000 U	1,200 U
Manganese	13.7	65	2,300	180	49.3 J	81.1 J	24.8 J	16.1	15.6	347	87.3	57.2	48.4	60.4	34.3	47.5	27.5
Mercury	0.081	1	31	2.3	0.07 J	0.18 J	0.03 J	0.04 J	0.08	0.31	0.11	0.03 J	0.04 J	0.02 J	0.04 J	0.19 U	0.03 J
Nickel	1.21	130	2,000	150	1.7	1.5	0.57 UJ	0.69 U	0.35 J	2.2	1.6	7.9 UJ	11 UJ	8.6 UJ	9.9 UJ	8.1 UJ	9.7 UJ
Potassium	116	--	--	--	500 J	533 J	62.6 J	48 J	107 J	238 J	164 J	197 J	170 J	107 J	101 J	74.3 J	91.8 J
Selenium	0.563	2.1	510	39	0.86	0.7 U	0.57 U	0.69 U	0.66 U	0.97 U	0.7 U	0.11 J	1.3 U	0.13 J	1.2 U	1 U	1.2 U
Sodium	80.9	--	--	--	215 J	205 J	41.8 J	162 J	151 J	262 J	197 J	980 U	1,300 U	1,100 U	1,200 U	1,000 U	1,200 U
Thallium	0.36	--	1	0.078	1.5 U	1.4 U	1.1 U	1.4 U	1.3 U	1.9 U	1.4 U	0.05 J	0.04 J	0.03 J	0.62 U	0.5 U	0.61 U
Vanadium	8.9	--	520	39	12.1	10.5	2.1 J	0.69 J	3.2	7.1	3.3	3.9 J	4.2 J	3.9 J	2.6 J	2.1 J	2.9 J
Zinc	10.8	1,200	31,000	2,300	10.4	10.2	2.3	3.5	3.2	14.3	10.6	14.4	13.3	11.1	5 U	4 U	4.8 U

Notes:

Shading indicates exceedance of two times the mean base background concentration for surface soil

Bold box indicates exceedance of NC SSLs

Bold text indicates exceedance of Adjusted Industrial Soil RSLs

Underline indicates exceedance of Adjusted Residential Soil RSLs

RSLs were adjusted for noncarcinogens to account for exposure to multiple constituents

J - Analyte present, value may or may not be accurate or precise

NJ - Qualitative identification questionable due to poor resolution, presumptively present at approximate quantity

R - Unreliable Result

U - The material was analyzed for, but not detected

UJ - Analyte not detected, quantitation limit may be inaccurate

mg/kg - Milligrams per kilogram

µg/kg - Micrograms per kilogram

TABLE A2-2
Sediment Analytical Results
Supplemental Investigation Site 69, Operable Unit No. 14
MCB CamLej, North Carolina

Station ID	**Camp Lejeune Background SS 2X Mean**	**NCSSLs (January, 2010)**	**Adjusted Industrial Soil RSLs (June, 2011)**	**Adjusted Residential Soil RSLs (June, 2011)**	IR69-SD01		IR69-SD02	IR69-SD03
Sample ID					IR69-SD01-10A	IR69-SD01D-10A	IR69-SD02-10A	IR69-SD03-10A
Sample Date					03/14/10	03/14/10	03/15/10	03/15/10
Chemical Name								
Volatile Organic Compounds (µg/kg)								
1,4-Dichlorobenzene	--	70	12,000	2,400	23 U	22 U	1.1 J	4.8 UJ
2-Butanone	--	16,000	20,000,000	2,800,000	58 U	54 U	66 J	12 UJ
Acetone	--	24,000	63,000,000	6,100,000	540 J	290 J	760 J	110 J
Carbon disulfide	--	3,800	370,000	82,000	17 J	13 J	9.2 J	4.8 UJ
Chloromethane	--	15	50,000	12,000	2.5 J	1.7 J	20 UJ	4.8 UJ
cis-1,2-Dichloroethene	--	360	200,000	16,000	51 J	27 J	20 UJ	4.8 UJ
Cyclohexane	--	--	120,000	120,000	1.8 J	1.7 J	20 UJ	4.8 UJ
m- and p-Xylene	--	6,000	250,000	59,000	0.77 J	43 U	40 UJ	9.6 UJ
Methyl acetate	--	--	29,000,000	7,800,000	95 J	57 J	570 J	65
Trichloroethene	--	18	10,000	2,500	2.8 J	1.9 J	20 UJ	4.8 UJ
Vinyl chloride	--	0.19	1,700	60	6 J	22 UJ	20 UJ	4.8 UJ
Semivolatile Organic Compounds (µg/kg)								
2-Methylnaphthalene	--	1,600	370,000	31,000	10 J	8.4 J	8.5 J	1.3 J
Acenaphthene	--	8,400	3,300,000	340,000	4.3 J	35 U	35 U	11 U
Anthracene	--	660,000	17,000,000	1,700,000	14 J	5.1 J	3.8 J	11 U
Benzaldehyde	--	--	1,200,000	780,000	130 J	240 J	400 J	230 U
Benzo(a)anthracene	--	180	2,100	150	17 J	2.6 J	2.9 J	11 U
Benzo(a)pyrene	--	59	210	15	32 J	37	18 J	0.84 J
Benzo(b)fluoranthene	--	600	2,100	150	24 J	9.6 J	7 J	11 U
Benzo(g,h,i)perylene	--	360,000	1,700,000	170,000	36 U	35 U	5.9 J	11 U
Benzo(k)fluoranthene	--	5,900	21,000	1,500	17 J	6.1 J	4.7 J	11 U
bis(2-Ethylhexyl)phthalate	--	7,200	120,000	35,000	400 J	710 U	710 U	230 U
Chrysene	--	18,000	210,000	15,000	18 J	6.1 J	4.9 J	11 U
Fluoranthene	--	330,000	2,200,000	230,000	25 J	9.2 J	6.9 J	11 U
Fluorene	--	56,000	2,200,000	230,000	5.4 J	35 U	2.4 J	11 U
Indeno(1,2,3-cd)pyrene	--	2,000	2,100	150	36 U	35 U	3.1 J	11 UJ
Phenanthrene	--	57,000	17,000,000	1,700,000	21 J	9.7 J	8.4 J	2 J
Pyrene	--	220,000	1,700,000	170,000	22 J	6.8 J	5.3 J	0.76 J
Pesticide/Polychlorinated Biphenyls (µg/kg)								
4,4'-DDD	--	240	7,200	2,000	13 J	4 NJ	13 NJ	4.4 U
4,4'-DDE	--	--	5,100	1,400	7.8 J	9.2 NJ	14 NJ	0.65 NJ
4,4'-DDT	--	340	7,000	1,700	5.5 J	14 R	69 R	4.5 J
Aldrin	--	--	100	29	2.3 J	2.2 J	35 U	2.3 U
alpha-Chlordane	--	68	6,500	1,600	7.4 U	6 J	35 UJ	0.98 J
beta-BHC	--	1.2	960	270	2.3 J	3.5 U	18 U	0.48 J
delta-BHC	--	1.2	960	270	3.6 J	6.7 J	35 UJ	2.3 UJ
Dieldrin	--	0.81	110	30	2.7 J	1.8 J	69 U	1.1 J
Endosulfan I	--	5,600	370,000	37,000	13 J	6.6 J	35 U	0.99 J
Endosulfan sulfate	--	5,600	370,000	37,000	10 J	8.8 J	170 J	2.9 J
Endrin	--	810	18,000	1,800	14 U	14 U	69 U	0.97 J
Endrin aldehyde	--	810	18,000	1,800	14 U	4.7 J	560 NJ	4.4 U

TABLE A2-2
Sediment Analytical Results
Supplemental Investigation Site 69, Operable Unit No. 14
MCB CamLej, North Carolina

Station ID	**Camp Lejeune Background SS 2X Mean**	**NCSSLs (January, 2010)**	**Adjusted Industrial Soil RSLs (June, 2011)**	**Adjusted Residential Soil RSLs (June, 2011)**	IR69-SD01		IR69-SD02	IR69-SD03
Sample ID					IR69-SD01-10A	IR69-SD01D-10A	IR69-SD02-10A	IR69-SD03-10A
Sample Date					03/14/10	03/14/10	03/15/10	03/15/10
Endrin ketone	--	810	18,000	1,800	7.4 J	4.9 J	130 J	1.3 J
gamma-BHC (Lindane)	--	1.8	2,100	520	7.4 U	7.1 U	35 U	2 J
gamma-Chlordane	--	68	6,500	1,600	9.1 J	2.5 J	4.5 J	1.1 J
Heptachlor	--	6.6	380	110	6 J	5 J	35 U	0.34 J
Heptachlor epoxide	--	0.82	190	53	3.7 J	2.1 J	35 U	2.3 U
Methoxychlor	--	22,000	310,000	31,000	74 U	71 UJ	150 J	23 UJ
Monocrotophos	--	--	--	--	1,900 U	1,800 U	1,600 R	420 J
Total Metals (mg/kg)								
Aluminum	5,487	--	99,000	7,700	7,470	6,540	8,650	469
Antimony	0.447	--	41	3.1	4.1 U	3.9 U	5.3 J	1.5 J
Barium	14.5	580	19,000	1,500	36.5 J	32.6 J	18.6 J	1.8 J
Beryllium	0.103	--	200	16	0.27 J	0.21 J	0.67 J	0.64 U
Calcium	6,360	--	--	--	3,970	3,830	2,350	643 U
Chromium	6.05	3.8	5.6	0.29	**8.8**	**7.4**	**9**	0.75 J
Cobalt	0.294	--	30	2.3	0.69 J	0.38 J	2.1 U	0.64 U
Copper	4.83	700	4,100	310	9.5	7.7	4.2	0.95
Iron	3,245	150	72,000	5,500	3100	2700	2000	114
Lead	12.3	270	800	400	12.4	11.5	13.7	1.7
Magnesium	238	--	--	--	2,070 U	1,930 U	1,320 J	21.8 J
Manganese	13.7	65	2,300	180	98.2	85.2	9.4	0.81 J
Mercury	0.081	1	31	2.3	0.19	0.09 J	0.14 U	0.04 U
Nickel	1.21	130	2,000	150	3.8	2.9	4.3	0.64 U
Potassium	116	--	--	--	2,070 UJ	1,930 UJ	520 J	24.8 J
Selenium	0.563	2.1	510	39	2.1 U	1.9 U	0.94 J	0.64 UJ
Sodium	80.9	--	--	--	2,070 U	1,930 U	1,400 J	69.7 J
Vanadium	8.9	--	520	39	12.7	10.9	10.2	0.7 J
Zinc	10.8	1,200	31,000	2,300	14.4 J	9.6 J	17	11.6
Wet Chemistry								
Total organic carbon (TOC) (mg/kg)	--	--	--	--	180,300	184,800	146,200	13,530

Notes:

Shading indicates exceedance of two times the mean base background

Bold box indicates exceedance of NC SSLs

Bold text indicates exceedance of Adjusted Industrial Soil RSLs

Underline indicates exceedance of Adjusted Residential Soil RSLs

RSLs were adjusted for noncarcinogens to account for exposure to multiple constituents

J - Analyte present, value may or may not be accurate or precise

R - Unreliable Result

U - The material was analyzed for, but not detected

UJ - Analyte not detected, quantitation limit may be inaccurate

mg/kg - Milligrams per kilogram

µg/kg - Micrograms per kilogram

Wet Chemistry was not validated

Appendix B
Soil Boring Logs, Well Completion Diagrams, and Well Development Sheets

PROJECT NUMBER	BORING NUMBER
418824.FI.SS	MR02-MW01 SHEET 1 OF 1

CH2MHILL

SOIL BORING LOG

PROJECT: MCB Camp Lej LOCATION: MW-02
ELEVATION: NM DRILLING CONTRACTOR: Probe Technologies
DRILLING METHOD AND EQUIPMENT USED: DPT - GeoProbe 6620 DT
WATER LEVELS: 14.19@0908 7/25/11 TOC START: 7/22/11 END: 7/22/11 LOGGER: K. Coke

DEPTH BELOW SURFACE (FT)	INTERVAL (FT)	RECOVERY (IN)	#/TYPE	STANDARD PENETRATION TEST RESULTS 6"-6"-6"-6" (N)	SOIL DESCRIPTION: SOIL NAME, USCS GROUP SYMBOL, COLOR, MOISTURE CONTENT, RELATIVE DENSITY, OR CONSISTENCY, SOIL STRUCTURE, MINERALOGY.	COMMENTS: DEPTH OF CASING, DRILLING RATE, DRILLING FLUID LOSS, TESTS, AND INSTRUMENTATION. FID (ppm) PID (ppm):
0	0-5'	36"	1	N/A	No Recovery 0-2' 2'-4' (SM) very fine grained silty sand, very soft 10YR 5/4 yellowish brown 4-5' Same as above, very stiff	0.0
5	5-10'	60"	2	N/A	~~5'-5½" look like topsoil,~~ 5-7' same as above but 10YR 5/6 yellowish brown w/ 6/1 gray @7' - trace clay → 8'	
10	10-15	60"	3	N/A 8-17'	~~8-10'~~ (CL) lean clay medium to high plasticity, stiff, dry. 10YR 5/6 yellowish brown w/ 6/1 gray	
15	15-20	60"	4	N/A	wet & soft from 15-17' Saturated @ 17' 17-20' - (CL) lean clay with sand ~~sandy lean clay~~ sand is coarse grained very soft, ~25% coarse grained 5YR 3/4 dark reddish brown	Saturated @17', and missing ~3" out of middle of split spoon where it is wet
20						1300 @20' drilling well set more rods 1345 Complete well install
25						

Kimberly Coke 7/22/11

Legend
PID - Photo-ionization detector
FID - Flame-ionization detector
T - Time

PROJECT NUMBER	BORING NUMBER
418824.FI.SS	MR02-MW02 SHEET 1 OF 1

CH2MHILL

SOIL BORING LOG

PROJECT: MCB Cam Lej LOCATION: UXO-02
ELEVATION: NM DRILLING CONTRACTOR: Probe Technologies
DRILLING METHOD AND EQUIPMENT USED: DPT Geoprobe Large DPT
(TOC) WATER LEVELS: 17.77 @0925 7/25/11 START: 7/22/11 END: 7/29/11 LOGGER: K. Cole

DEPTH BELOW SURFACE (FT)	INTERVAL (FT)	RECOVERY (IN)	#/TYPE	STANDARD PENETRATION TEST RESULTS 6"-6"-6"-6" (N)	SOIL DESCRIPTION: SOIL NAME, USCS GROUP SYMBOL, COLOR, MOISTURE CONTENT, RELATIVE DENSITY, OR CONSISTENCY, SOIL STRUCTURE, MINERALOGY.	COMMENTS: DEPTH OF CASING, DRILLING RATE, DRILLING FLUID LOSS, TESTS, AND INSTRUMENTATION. FID (ppm) PID (ppm):	
0	0-5'	36"	1	N/A	0-5'-silty sand (SM) dry, very soft 2-4' 4-5', very stiff 2-3.5 2.5Y 4/2 dark grayish brown 3.5-4 2.5Y 6/4 light yellowish brown	0-2' no recovery 0.0	1455
5	5-10	60"	2	N/A	4-5 10YR 5/6 yellowish brown 6.5-8.5-same as above 10YR 4/4 dark yellowish brown	5-6.5' no recovery	
10	10-15	60"	3	N/A	8.5-14' -(CL) lean clay w/sand very fine grained, dry, very stiff to hard, 7.5YR 5/8 strong brown w/6/1 gray low to no plasticity		
15	15-20	60"	4	N/A	14-17.5' -(CL) lean clay, medium consistency 7.5YR 6/1 gray medium to high plasticity, soft		
20					17.5-22' (SC) clayey sand, low plasticity, stiff-medium GLEY 1 4/5GY dark greenish gray No recovery 22'-22' 2" 22' 2"-25' (SW-SM) well graded sand with clay, plast., ~75% coarse sand, saturated 5YR 3/4 dark reddish brown	Water at 22', wet 20'-22'	1519 stop 7/22/11 0848 start 0950 - complete
25							

Kimberly Cole 7'

Legend
PID - Photo-ionization detector
FID - Flame-ionization detector
T - Time

CH2MHILL

PROJECT NUMBER	BORING NUMBER	
418824.FI.SS	MR02-MW03	SHEET 1 OF 1

SOIL BORING LOG

PROJECT: RICB Camlej LOCATION: UXO-02
ELEVATION: N/M DRILLING CONTRACTOR:
DRILLING METHOD AND EQUIPMENT USED: DPT Geoprobe 6620 DT
WATER LEVELS: 1920 @ 0948 7/25/11 TOC START: 7/24/11 END: 7/24/11 LOGGER: K. Coke

DEPTH BELOW SURFACE (FT)	INTERVAL (FT)	RECOVERY (IN)	#/TYPE	STANDARD PENETRATION TEST RESULTS 6"-6"-6"-6" (N)	SOIL DESCRIPTION: SOIL NAME, USCS GROUP SYMBOL, COLOR, MOISTURE CONTENT, RELATIVE DENSITY, OR CONSISTENCY, SOIL STRUCTURE, MINERALOGY.	COMMENTS: DEPTH OF CASING, DRILLING RATE, DRILLING FLUID LOSS, TESTS, AND INSTRUMENTATION. FID (ppm) PID (ppm):
0	0-5'	42	1	N/A	0-1.5' No recovery 1.5-2' (SM) silty sand 2-5' (SC) clayey sand, low to no plasticity very stiff, dry	0
5	5-10'	60	2	N/A	5-30' (CL) lean clay, medium to stiff, dry, medium plasticity 10YR 5/6 yellowish brown w/6/2 gray 12.5'-30' GLEY 1 5/5GY greenish gray, very stiff, high plasticity (CH)	0
10	10-15'	60	3	N/A		0
15	15-20	60	4	N/A	Same as above (CH) soft GLEY 1 5/5GY ~~wet~~ stiff	0
20	20-25	60	5	N/A	soft @ 22' @ wet through rest of core, same as above	0
25	25-30	~~60~~ ~~120~~ 60	6, ~~7~~ ~~8~~	N/A	26'-30' transition to cemented sands, white with the greenish gray color from above	0

0955

*CO varied between 0-2 @ all PID readings

1145

Legend
PID - Photo-ionization detector
FID - Flame-ionization detector
T - Time

Kimberley Coke
7/24/11

33'

PROJECT NUMBER	BORING NUMBER
418824.FI.SS	MR02-MW04 SHEET 1 OF 1

CH2MHILL

SOIL BORING LOG

PROJECT: MCB Camp Lej LOCATION: UXO-02
ELEVATION: NM DRILLING CONTRACTOR: Probe Technologies
DRILLING METHOD AND EQUIPMENT USED: DPT-Geoprobe 6620 DT
TOC WATER LEVELS: 8.08 @ 0959 7/23/11 START: 7/23/11 END: 7/23/11 LOGGER: K Coke

DEPTH BELOW SURFACE (FT)	INTERVAL (FT)	RECOVERY (IN)	#/TYPE	STANDARD PENETRATION TEST RESULTS 6"-6"-6" (N)	SOIL DESCRIPTION: SOIL NAME, USCS GROUP SYMBOL, COLOR, MOISTURE CONTENT, RELATIVE DENSITY, OR CONSISTENCY, SOIL STRUCTURE, MINERALOGY.	COMMENTS: DEPTH OF CASING, DRILLING RATE, DRILLING FLUID LOSS, TESTS, AND INSTRUMENTATION. FID (ppm) PID (ppm):
0	0-5'	48"	1	N/A	0-1' No recovery 1-5 (ML) sandy silt, loose, dry, no plasticity, medium grained 1-2.5 YR 5/3 reddish gray 2.5'-3' 7.5YR 2.5/1 black 3-5' 7.5YR 3/2 dark brown	0 1658
5	5-10'	48"	2	N/A	5-6' No recovery 6-9' - same as above (ML) sandy silt, no plasticity, wet/saturated, loose 6-6.5' 7.5YR 3/2 dark brown 6.5-8.5' 10YR 5/4 yellowish brown 8.5-9' - 2.5Y 6/1 gray 9-10' (SC) clayey sand, wet, ~~very~~ soft, low plasticity, medium grained, 2.5Y 6/1 gray	wet at 5' until 10'
~~10~~ 10						
~~20~~						
~~25~~						

Kimberley Coke 7/23/11

Legend
PID - Photo-ionization detector
FID - Flame-ionization detector
T - Time

PROJECT NUMBER	BORING NUMBER
418824.FI.SS	MR02-MW05 SHEET 1 OF 1

CH2MHILL

SOIL BORING LOG

PROJECT: MCB Camp Lejeune LOCATION: UXO-02
ELEVATION: NM DRILLING CONTRACTOR: Probe Technologies
DRILLING METHOD AND EQUIPMENT USED: DPT- Geoprobe 6620 DT
TOC WATER LEVELS: 12.03 @ 0955 7/25/11 START: 7/23/11 END: 7/23/11 LOGGER: K. Coke

DEPTH BELOW SURFACE (FT)	INTERVAL (FT)	RECOVERY (IN)	#/TYPE	STANDARD PENETRATION TEST RESULTS 6"-6"-6"-6" (N)	SOIL DESCRIPTION: SOIL NAME, USCS GROUP SYMBOL, COLOR, MOISTURE CONTENT, RELATIVE DENSITY, OR CONSISTENCY, SOIL STRUCTURE, MINERALOGY.	COMMENTS: DEPTH OF CASING, DRILLING RATE, DRILLING FLUID LOSS, TESTS, AND INSTRUMENTATION. FID (ppm)	PID (ppm):
0	0-5'	30"	1	N/A	0-2.5' No Recovery 2.5-6' (SM) silty sand, very fine grained, soft, dry 10YR 4/3 brown - 2.5'-3' 2.5Y 7/2 light gray		0
5	5-10	60"	2	N/A	6-8' (SC) clayey sand, very stiff, dry 10YR 5/6 yellowish brown with 6/1 gray		0
10	10-15'	~~47"~~ 30"	3	N/A	8-14' (CL) lean clay w/sand medium plasticity medium to stiff, dry v. fine sand. wet/moist @ ~13'	No recovery from 10-12.5'	0
15					14-15' (SC) clayey sand medium grained no plasticity wet, soft	water @ 14' @ 14' could also argue its a sandy clay.	
20							
25							

1500 stand

1430 end

Kimberley Coke 7/23/11

Legend
PID - Photo-ionization detector
FID - Flame-ionization detector
T - Time

PROJECT NUMBER	WELL NUMBER
418824 FI.SS	MRO2-MW01 SHEET 1 OF 1

CH2MHILL

WELL COMPLETION DIAGRAM

PROJECT: MCB Camp Lejeune LOCATION: UXO-02
DRILLING CONTRACTOR: ~~[illegible]~~ Probe Technologies
DRILLING METHOD AND EQUIPMENT USED: DPT-Geoprobe Model 20 DT
WATER LEVELS: TOC 7/25/11 0908 4.19 START: 7/22/11 END: 7/24/11 LOGGER: K. COKO

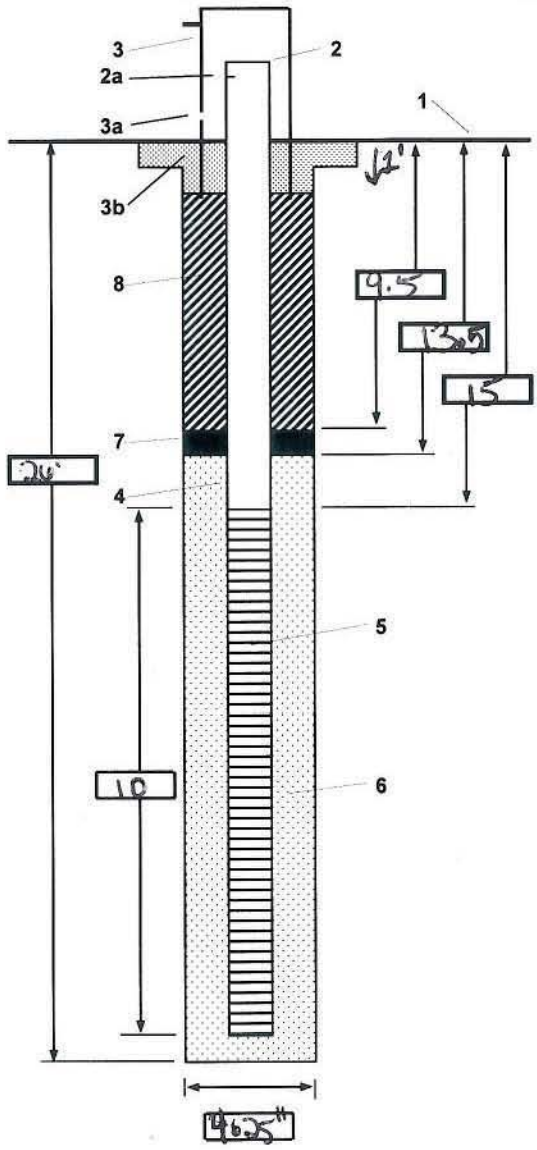

1- Ground elevation at well: NM

2- Top of casing elevation: NM
a) vent hole?: NA

3- Wellhead protection cover type: bollards, stickup
a) weep hole?: NA
b) concrete pad dimensions:

4- Dia./type of well casing: 2" ~~Sch 40~~ PVC

5- Type/slot size of screen: 0.010 in Sch 40 PVC

6- Type screen filter: DSI #2
a) Quantity used: 5.5 bags 50lb

7- Type of seal: enviroplug medium
a) Quantity used: 1 bag

8- Grout
a) Grout mix used: Quikrete Portland Type I/~~II~~(2) - 94 lbs.
b) Method of placement: manual
c) Vol. of well casing grout: ~17 gall

Development method: Submersible

Development time: 1 hour

Estimated purge volume: 40 gallons

Comments: 1 bag quikrete + ~11 gall H_2O
drillers did not have the mud

Kimberly Coko 7/24/11

PROJECT NUMBER	WELL NUMBER
418824.FI.SS	MR02-MW02 SHEET 1 OF 1

CH2MHILL

WELL COMPLETION DIAGRAM

PROJECT: MCB Camp Lejeune LOCATION: UXO-02
DRILLING CONTRACTOR: Probe Technologies
DRILLING METHOD AND EQUIPMENT USED: DPT - Geoprobe 6620 DT
WATER LEVELS: 17.77 @ 0925 7/23/11 TOC START: 7/23/11 END: 7/24/11 LOGGER: K. Cole

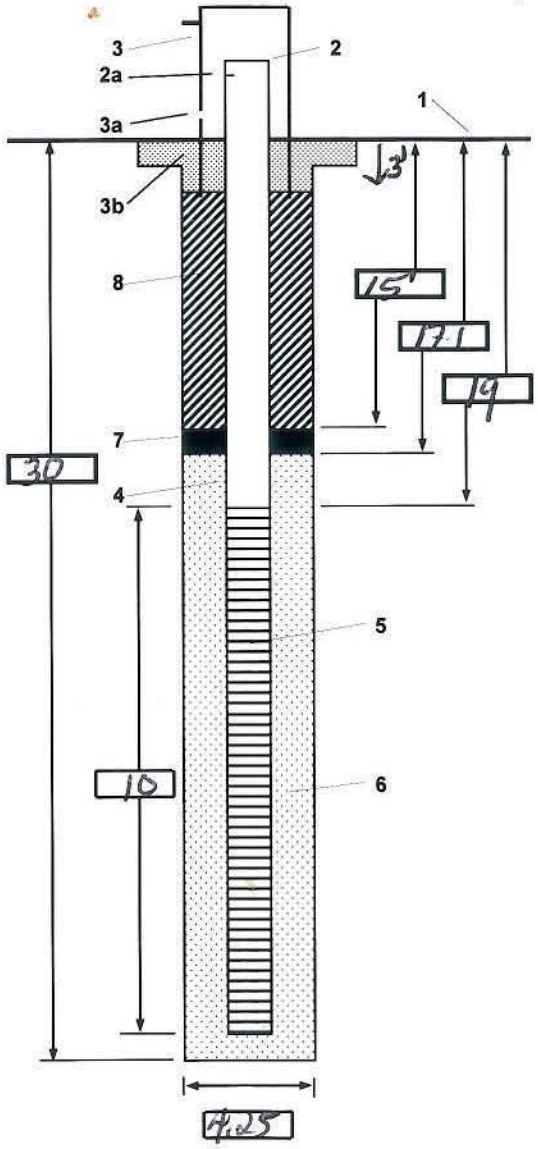

1- Ground elevation at well: NM

2- Top of casing elevation: NM
a) vent hole? N/A

3- Wellhead protection cover type: Stick up 4 bollards
a) weep hole? N/A
b) concrete pad dimensions

4- Dia./type of well casing: 2" PVC

5- Type/slot size of screen: 0.010" Sch 40 PVC

6- Type screen filter: DSI #2 gravel
a) Quantity used: 5 3/4 - 50 lb bags

7- Type of seal: enviroplug medium
a) Quantity used: 1 bag - 50 lb

8- Grout
a) Grout mix used: Quikrete Portland type I/II - 94 lbs
b) Method of placement: Manual
c) Vol. of well casing grout: ~1 gal

Development method: Submersible

Development time: 1 hour 10 min

Estimated purge volume: 48 gallons

Comments: ~11 gall H_2O, 1 bag quikrete no tremie b/c drill crew did not have added to gal + 1 bag

Kimberley Cole 7/24/11

PROJECT NUMBER	WELL NUMBER
418824.FI.SS	MRD2-MW03 SHEET 1 OF 1

CH2MHILL

WELL COMPLETION DIAGRAM

PROJECT: MCB Camp J LOCATION: UXO-03
DRILLING CONTRACTOR: ~~HA~~ Probe Technologies
DRILLING METHOD AND EQUIPMENT USED: DPT-Geoprobe 6620 DT
WATER LEVELS: 19.20 @0948 7/25/11 TOC START: 7/24/11 END: 7/24/11 LOGGER: K. Coka

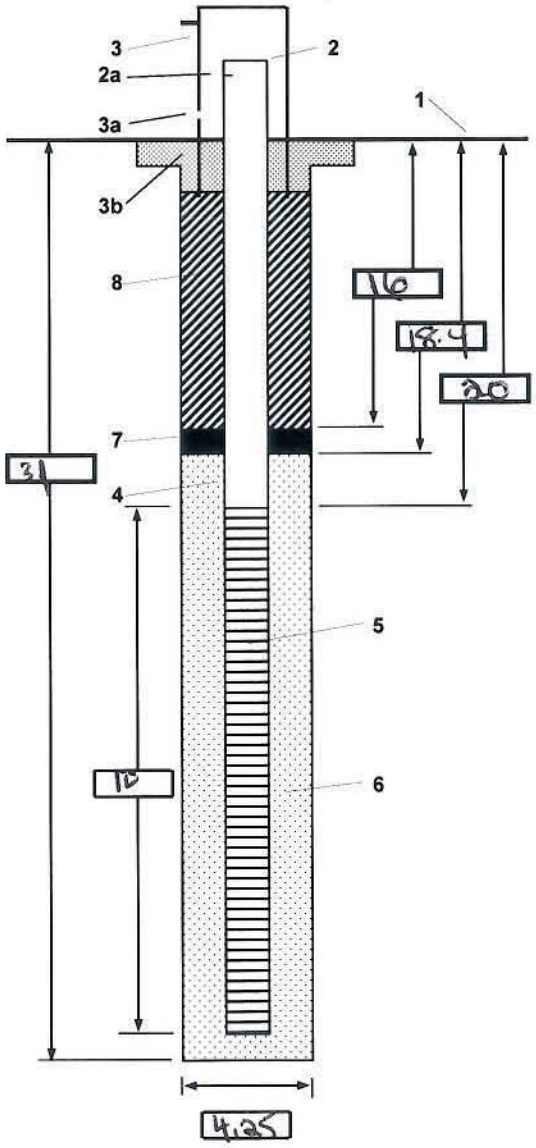

1- Ground elevation at well: NM

2- Top of casing elevation: NM
a) vent hole? N/A

3- Wellhead protection cover type: Stick up/bollards
a) weep hole? N/A
b) concrete pad dimensions

4- Dia./type of well casing: 2" PVC

5- Type/slot size of screen: 0.010" Sch 40 PVC

6- Type screen filter: DSI #2
a) Quantity used: 6 bags - 50 lb bags

7- Type of seal: enviroplug medium
a) Quantity used: 1 bag

8- Grout
a) Grout mix used
b) Method of placement
c) Vol. of well casing grout

Development method: Submersible

Development time: 1 hour

Estimated purge volume: 27 gallons

Comments

Kimberley Coka 7/24/11

PROJECT NUMBER	WELL NUMBER	
418824.FI.SS	MR02-MW04	SHEET 1 OF 1

CH2MHILL

WELL COMPLETION DIAGRAM

PROJECT: MLB Camkey LOCATION: UXO-02
DRILLING CONTRACTOR: Probe Technologies
DRILLING METHOD AND EQUIPMENT USED: DPT-GeoProbe 6620 DT
WATER LEVELS: 8.08@0959 7/23/11 TOC START: 7/23/11 END: 7/23/11 LOGGER: K. Cole

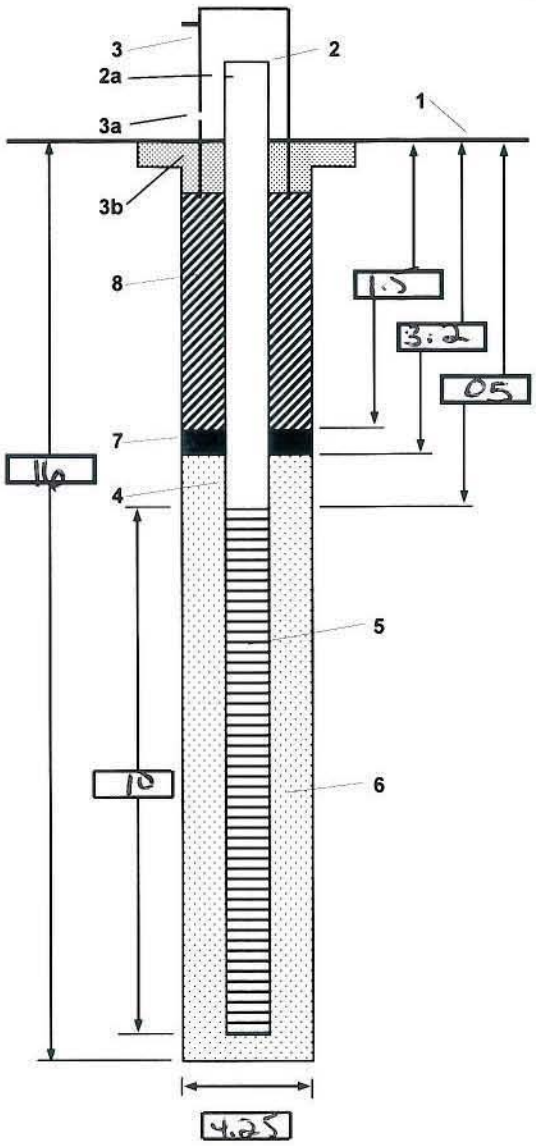

1- Ground elevation at well: NM

2- Top of casing elevation: NM
a) vent hole?: N/A

3- Wellhead protection cover type: stickup & bollards
a) weep hole?: N/A
b) concrete pad dimensions:

4- Dia./type of well casing: 2" PVC

5- Type/slot size of screen: 0.010" Sch 40 PVC

6- Type screen filter: DSI #2
a) Quantity used: 6.5 50lb bags

7- Type of seal: Chuckplug medium
a) Quantity used: 1 bag 50-lb

8- Grout
a) Grout mix used:
b) Method of placement:
c) Vol. of well casing grout:

Development method: submersible

Development time: 1 hour

Estimated purge volume: 17 gall

Comments:

Kimberley Cole 7/23/11 24

PROJECT NUMBER	WELL NUMBER	
418824.FT.SS	MR02-MW05	SHEET 1 OF 1

CH2MHILL

WELL COMPLETION DIAGRAM

PROJECT: MCB Camlej LOCATION: UXO-02
DRILLING CONTRACTOR: Probe Technologies
DRILLING METHOD AND EQUIPMENT USED: DPT - Geoprobe 6620 DT
WATER LEVELS: 12.03 @ 0955 7/25/11 TOC START: 7/23/11 END: 7/23/11 LOGGER: K. Cole

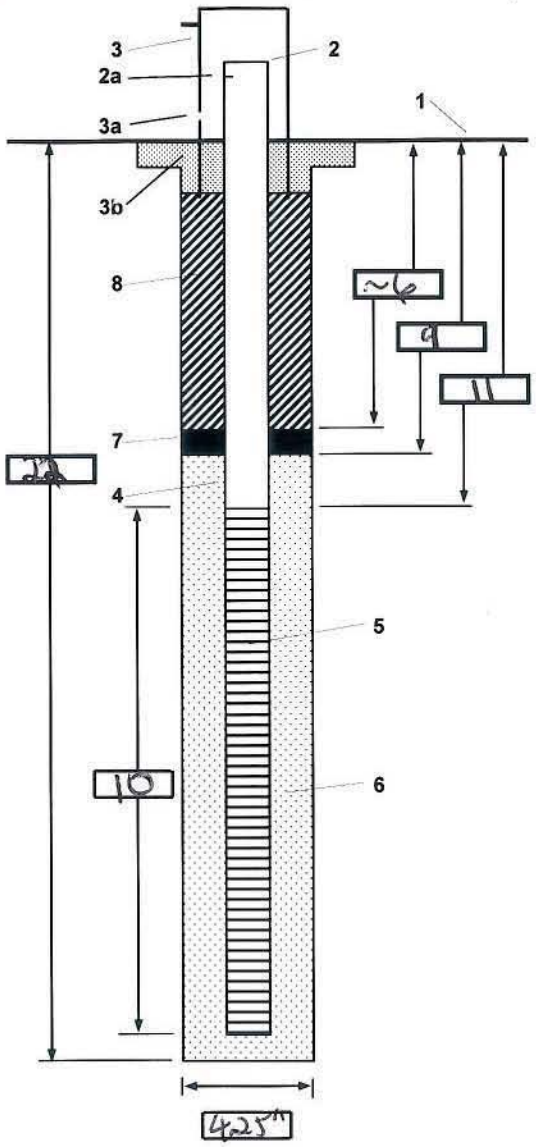

1- Ground elevation at well: NM

2- Top of casing elevation: NM
a) vent hole?: N/A

3- Wellhead protection cover type: Stick up / bollards
a) weep hole?: N/A
b) concrete pad dimensions: 3' x 3'

4- Dia./type of well casing: 2" PVC

5- Type/slot size of screen: 0.010" Sch 40 PVC

6- Type screen filter: DSI #2 sand
a) Quantity used: 5.5 - 50 lb bags

7- Type of seal: Enviroplug medium
a) Quantity used: 2 - 50 lb bag

8- Grout
a) Grout mix used: quikrete type I/II - 94 lbs
b) Method of placement: manual
c) Vol. of well casing grout: (1 bag) 5 gall mixed grout

Development method: submersible pump

Development time: 1 hour 10 min

Estimated purge volume: 80 gallons

Comments: manual placement of grout b/c drillers dont have tremie pipe.

Kimberley Cole

CH2MHILL

Well Development Sheet

Project Site Name: Camlej **Well ID:** MR02-MW01

Project No: 418824.FI.SS **Contractor:** Probe Technologies

Development data Visual

	Time	pH SU	Cond. mS/cm	Temp. °C	Turbidity NTU	DO mg/L	ORP mV	Volume gallons
Date: 7/24/11	1228	5.60	0.134	16.88	<10	6.32	13.4	NM
Method: Submersible	1230	5.42	0.124	16.81	<10	6.71	40.0	NM
Pump setting: N/A	1235	5.44	0.138	16.84	<10	6.49	51.9	NM
Well casing dia. (in.): 2	1240	5.87	0.162	17.16	<10(0)	5.75	37.2	NM
Total well depth (TOC): 27.95	1245	5.83	0.151	17.13	<10(0)	5.95	38.2	NM
Static water level (TOC): 14.19	1250	5.79	0.148	17.12	0	6.12	38.4	NM
One purge volume (gals.): 2.24	1255	5.78	0.148	17.14	0	6.22	37.9	NM
Start time: 1051, 1226	1300	5.77	0.148	17.18	0	6.20	37.6	NM
End time: 1120, 1300								
Total dev. volume (gals.): 40								

Comments:

very dark gray
1102 went dry, started pumping
at 1104, good recharge

Observations/Notes:

Kimberley [signature] 7/24/11

CH2MHILL

Well Development Sheet

Project Site Name: Camkey **Well ID:** MW02-MW02

Project No: 418824.FI.SS **Contractor:** Probe Technologies

Development data

	Time	pH SU	Cond. mS/cm	Temp. °C	Turbidity NTU	DO mg/L	ORP mV	Volume gallons
Date: 7/24/11	1310	5.35	0.133	17.54	<10	2.66	43.4	NM
Method: Submersible	1315	5.18	0.132	17.55	0	1.68	19.1	NM
Pump setting: N/A	1320	5.16	0.131	17.54	0	1.24	8.2	NM
Well casing dia. (in.): 2	1325	5.15	0.131	17.54	0	0.84	-3.6	NM
Total well depth (TOC): 32.29	1330	5.09	0.131	17.53	0	0.73	-8.9	NM
Static water level (TOC): 17.77	1335	5.20	0.131	17.55	0	0.62	-20.8	NM
One purge volume (gals.): 2.37	1340	5.20	0.131	17.57	0	0.55	-25.5	NM
Start time: 1143 1307	1345	5.20	0.131	17.55	0	0.44	-27.5	NM
End time: 1214 1350	1350	5.21	0.131	17.55	0	0.40	-28.9	NM
Total dev. volume (gals.): ~~52~~ 48								

Comments:
very turbid

Observations/Notes:

Kimberley Oke 7/24/11

Page 1 of 1

CH2MHILL

Well Development Sheet

Project Site Name: CamLej

Well ID: MW02-MW03

Project No: 418824.FI.SS

Contractor: Probe Technologies

Development data Visual

	Time	pH SU	Cond. mS/cm	Temp. °C	Turbidity NTU	DO mg/L	ORP mV	Volume gallons
Date: 7/24/11	1435	6.47	0.417	18.39	<50	5.77	1.9	NM
Method: Submersible	1440	6.75	0.416	18.29	<10	5.19	-13.4	-18
Pump setting: N/A	1445	6.87	0.416	18.25	<10	4.95	-2.08	NM
Well casing dia. (in.): 2	1450	6.93	0.415	18.25	<10	4.95	-2.32*	NM
Total well depth (TOC): 33.43	1455	6.99	0.416	18.28	0	4.93	-26.3	NM
Static water level (TOC): 19.20	1500	7.02	0.414	18.19	0	4.83	-28.7	NM
One purge volume (gals.): 2.37								
Start time: 1407								
End time: 1500								
Total dev. volume (gals.): 7.27								

Comments:

dark gray water

*not sure if misread this ORP value.

Observations/Notes:

Kimberley Cole 7/24/11

CH2MHILL

Well Development Sheet

Project Site Name: Cambej
Well ID: MW02-MW04
Project No: 418824 FI.55
Contractor: Probe Technologies

Development data

	Time	pH SU	Cond. mS/cm	Temp. °C	Turbidity NTU	DO mg/L	ORP mV	Volume gallons
Date: 7/24/11	0800	4.67	0.148	20.70	>100	7.80	84.3	NM
Method: Submersible	0805	4.57	0.146	20.73	>100	7.08	81.6	NM
Pump setting: N/A	0810	4.47	0.146	20.84	~60	6.25	79.8	NM
Well casing dia. (in.): 2	0815	4.43	0.146	20.78	~30	6.53	71.4	NM
Total well depth (TOC): 18.00	0820	4.51	0.145	20.75	<10	6.46	69.5	NM
Static water level (TOC): 8.08	0825	4.47	0.145	21.10	<10	6.38	68.7	NM
One purge volume (gals.): 1.67	0830	4.45	0.145	21.19	<10	~~6.50~~ 6.42	67.5	~~[illegible]~~ 17
Start time: 0737								
End time: 0830								
Total dev. volume (gals.): 17								

Comments:

dry at 0750, quick recharge
restarted a minute later

very f. grained particles floating @ 0810

Observations/Notes:

Due to water recharging while pumping and the check valve on the pump, the slight changes in data occurred, however the readings are stable

Kimberley Cole
7/24/11

CH2MHILL

Well Development Sheet

Project Site Name: Camhej **Well ID:** MW02-MW05

Project No: 418824.FI.SS **Contractor:** Probe Technologies

Development data Visual

	Time	pH SU	Cond. mS/cm	Temp. °C	Turbidity NTU	DO mg/L	ORP mV	Volume gallons
Date: 7/24/11	1725	6.33	0.231	17.55	~75	502	59.5	35
Method: Submersible	1730	6.12	0.230	17.51	~50	1.27	56.9	NM
Pump setting: N/A	1735	6.03	0.230	17.50	~20	1.02	54.6	NM
Well casing dia. (in.): 2	1740	6.04	0.230	17.49	<20	0.94	52.4	NM
Total well depth (TOC): 23.83	~~1745~~							
Static water level (TOC): 12.03	1805	6.29	0.227	17.59	>100	1.13	54.6	NM
One purge volume (gals.): 1.92	1810	6.01	0.229	17.60	~50	0.95	52.3	NM
Start time: 1654 1804	1815	6.00	0.226	17.58	~60	0.97	48.4	NM
End time: 1740 1830	1820	5.95	0.225	17.56	<50	0.89	45.8	NM
Total dev. volume (gals.): 80	1825	5.95	0.226	17.54	<10	0.89	42.9	NM
Comments:	1830	5.98	0.227	17.52	0, clear	0.89	43.3	NM

Stopped @ 1740 to get new drum

Observations/Notes:

Appendix C
Civil Survey Report

LDSI

September 9, 2011

CH2M Hill / MCB Camp Lejeune / Navy Clean 1000 – CTO WE 41
Intrusive Investigation for Military Munitions response Program Sites UXO-02, UXO-11 and UXO-17
Field Procedures
Field Crew Staff: Glen Kitchen, Jason Boyles, John Baker
Dates: 08/08/2011 – 08/19/2011

Equipment:

- Trimble R8 GNSS receivers w/ integrated L1/L2 plus Glonass antenna
- Leica TPS 1200 Total Station / Topcon GTS 3B Total Station
- Nikon Level

All work performed under the direct supervision and control of North Carolina Professional Land Surveyors and except as noted, meets or exceeds the positional standards for "third-order class II" surveys. The datum for the project and deliverables is: NAD83(NSRS2007), NAVD88, UTM, Zone 18N, meters.

UXO-02 – Control Points were established using RTK GPS and utilizing the North Carolina Virtual Reference Network for real time corrections to the GPS. GPS solutions were verified by checking into existing NC Geodetic Survey Monuments. Each control point was set and checked with a minimum occupation time of three minutes and 180 epochs of data and checked with a additional occupation time of three minutes and 180 epochs plus a different satellite constellation. The positional accuracy of the control points met the standards for "third-order, class II" surveys. The dc files and raw data files for the conventional locations are included with this report. Each well was located horizontally via conventional survey methods and and vertically with level loop and turns on each well. Traverse for horizontal locations were closed loops exceeding 1:10,000 closure. The vertical location level loops had a closure exceeding Third Order accuracy.

UXO-11 – Control Points were established using RTK GPS and utilizing the North Carolina Virtual Reference Network for real time corrections to the GPS. GPS solutions were verified by checking into existing NC Geodetic Survey Monuments. Each control point was set and checked with a minimum occupation time of three minutes and 180 epochs of data and checked with a additional occupation time of three minutes and 180 epochs plus a different satellite constellation. The positional accuracy of the control points met the standards for "third-order, class II" surveys. The dc files and raw data files for the conventional locations are included with this report. Each well was located horizontally via conventional survey methods and and vertically with level loop and turns on each well. Traverse for horizontal locations were closed loops exceeding 1:10,000 closure. The vertical location level loops had a closure exceeding Third Order accuracy.

UXO-17 – Due to masking and un-favorable RTK GPS conditions, Control Points were established using Static GPS and Online Positions User Service (OPUS) post processing. Control points were established and the points tied together via conventional surveying methods. The Control points were used for all conventional traverse loops and vertical level loops. The post processing solutions did not meet Third Order accuracy requirements as noted in the SOW and CH2M Hill project manager was notified of possible solutions to meet the specifications. It was decided to accept the control point locations and the subsequent conventional surveys met the closure requirements for Third Order surveys. The dc files and raw data files for the conventional locations are included with this report. Each well was located horizontally via conventional survey methods and and vertically

with level loop and turns on each well. Traverse for horizontal locations were closed loops and closure's exceeding 1:10,000. The vertical location level loops had a closure exceeding Third Order accuracy.

All horizontal locations for the Monitoring Wells were obtained through the use of conventional survey methods from the Control Points at each location. The vertical locations for the Wells were obtained through the use of 'hard levels" with Control Point 101 used as the Benchmark.

NORTH CAROLINA PROFESSIONAL SEAL L-4719 LAND SURVEYOR SETH E. MARTIN

4/4/11

LDSI N 36° - 09' - 15.33" W 86° - 46' - 13.64"

All points UTM, Zone 18 North, NAD83, meters, NAVD88

Point #	Northing	Easting	Elevation	Description
UXO-2 Well Locations				
600	3828886.446	276900.133	6.601	GND
601	3828886.031	276900.589	7.526	LIP OF 2" PVC PIPE MR2-MW03
602	3828886.050	276900.601	7.440	LIP OF CASING
1000	3828629.409	277360.480	8.900	GND
1001	3828628.993	277360.195	9.670	LIP OF 2" PVC PIPE MR2 MW04
1002	3828629.013	277360.189	9.690	LIP CASING
1003	3828650.826	277728.943	2.800	GND
1004	3828650.330	277729.190	3.690	LIP OF 2" PVC PIPE MR2-MW05
1005	3828650.323	277729.216	3.670	LIP OF CASING
2000	3829329.140	277056.396	3.400	GND
2001	3829328.712	277056.196	4.140	LIP OF CASING
2002	3829328.689	277056.186	4.150	LIP 2" PVC PIPE MR2 MW-01
2003	3829127.490	277347.812	4.700	GND
2004	3829127.147	277348.190	5.490	LIP OF CASING
2005	3829127.097	277348.247	5.501	LIP OF 2" PVC PIPE MR2 MW-2

UXO-11 Well Locations				
3000	3846527.940	274668.697	5.913	GND
3001	3846527.570	274668.732	5.944	LIP OF CASING
3002	3846527.489	274668.763	5.782	LIP OF 2" PVC PIPE MR11-MW02
3003	3846486.941	274666.393	5.977	GND
3004	3846486.767	274666.773	6.008	LIP OF CASING
3005	3846486.671	274666.788	5.785	LIP OF 2" PVC PIPE MR11-MW01
3006	3846526.857	274759.065	5.816	GND
3007	3846526.669	274759.386	5.849	LIP OF CASING
3008	3846526.581	274759.408	5.648	LIP OF 2" PVC PIPEMR11-MW05
3009	3846554.344	274730.574	5.977	GND
3010	3846554.036	274730.621	6.002	LIP OF CASING
3011	3846553.984	274730.658	5.749	LIP OF 2" PVC PIPE MR11-MW03
3012	3846606.233	274759.970	5.453	GND
3013	3846606.166	274760.355	5.486	LIP OF CASING
3014	3846606.102	274760.401	5.316	LIP OF 2" PVC PIPE MR11-MW04

UXO-17 Well Locations				
4000	3841589.720	287470.166	8.239	LIP OF 2" PVC PIPE MR17-TW16
4001	3841589.721	287470.137	8.190	LIP OF CASING
4002	3841589.905	287469.619	7.422	GND
4003	3841602.970	287498.101	7.023	GND
4004	3841603.788	287498.065	7.873	LIP OF 2" PVC PIPE MR-17 TW18
4005	3841603.821	287498.049	7.818	LIP OF CASING
4006	3841619.451	287492.917	6.699	GND
4007	3841619.725	287491.877	7.541	LIP OF 2" PVC PIPE MR-17 TW17
4008	3841619.728	287491.837	7.480	LIP OF CASING
4009	3841660.597	287503.500	5.438	GND
4010	3841660.393	287503.858	6.568	LIP OF 2" PVC PIPE MR-17-15 OLD MARK
4011	3841660.411	287503.834	6.571	LIP OF CASING

NORTH CAROLINA PROFESSIONAL SEAL L-4719 LAND SURVEYOR SETH MARTIN

10/11/11

Appendix D
Groundwater Sampling Data Sheets

CH2MHILL

GROUNDWATER SAMPLING DATA SHEET

Client: NAVFAC
Location: MCB CamLej
Event: WE-41 Groundwater Sampling
Date: 7/27/2011
Weather: Raining

Project Number:
Well ID: MR02-JR69-MW11
Sample ID: MR02-JR69-MW11-110
Sampling Team: D. Seezen, BOU

Total Depth: 19 FT.(BTOC)
Depth to water: (-) 10.1 FT.(BTOC)
Water Column: 8.9 FT.
(x) 0.163 GAL/FT.
Well Volume: 1.45 GAL x 3 = 4.3
Total Purge Vol.: 5.2 GAL.

Measuring Device: YSI 556# 11519
HANNA# 09026

Purge Device: Bladder Pump

Pump Inlet Depth 17 FT.(BTOC)

Well Dia. (inches)	Volume (gallons/foot)
1	0.041
1.25	0.064
2	0.163
4	0.653
6	1.469

SAMPLE DATA

Date: 7/27/11 Time: 1140	Temp. °C	Cond. mS/cm	DO mg/L	pH SU	ORP mV	Turbidity NTU	Color / Odor / Comments
Method: Low flow	18.46	0.113	0.20	5.51	128.5	9.21	

FIELD PARAMETERS

Time	Purge Vol. (gals)	Temp. °C	Cond. mS/cm	DO mg/L	pH SU	ORP mV	Turbidity NTU	Depth to water (ft bgs)	Color / Odor / Comments
Stabilization Criteria		± 10%	± 3%	± 10%	± 0.1	± 10 mV	± 10% or <10		
1110	1.3	18.67	0.113	0.89	4.58	241.4	50.6	10.9	
1120	2.6	18.63	0.112	0.30	5.20	183	17.4	10.9	
1130	3.9	18.47	0.112	0.20	5.51	128.4	10.5	↓	
1140	5.2	18.46	0.113	0.20	5.51	128.5	9.21	↓	

Analysis	Preservative	Container requirements	No. of containers
TAL Metals	HNO_3	250 mL poly	1

Observations/Notes: Purge Start Time: 1100 Purge Rate: 0.5L/min

MS/MSD Duplicate ID No.:

Signature(s):

CH2MHILL

GROUNDWATER SAMPLING DATA SHEET

Client: NAVFAC
Location: MCB CamLej
Event: WE-41 Groundwater Sampling
Date: 7/ 27 /2011
Weather: 80°

Project Number:
Well ID: MR02-MW02
Sample ID: MR 02-GW02-11C
Sampling Team: D. Sewell RDV

Total Depth: 29 FT.(BTOC)
Depth to water: (-) 17.60 FT.(BTOC)
Water Column: 11.4 FT.
(x) 0.163 GAL/FT.
Well Volume: 1.8 GAL. x 3 = 5.57
Total Purge Vol.: 18.2 GAL.

Measuring Device: YSI 556# 11519
HANNA# 09026

Purge Device: Bladder Pump

Pump Inlet Depth 25 FT.(BTOC)

Well Dia. (inches)	Volume (gallons/foot)
1	0.041
1.25	0.064
2	0.163
4	0.653
6	1.469

SAMPLE DATA

Date: 7/28/11 Time: 1535	Temp. °C	Cond. mS/cm	DO mg/L	pH SU	ORP mV	Turbidity NTU	Color / Odor / Comments
Method: Low flow	18.91	0.141	5.40	5.85	121.4	19.7	

FIELD PARAMETERS

Time	Purge Vol. (gals)	Temp. °C	Cond. mS/cm	DO mg/L	pH SU	ORP mV	Turbidity NTU	Depth to water (ft bgs)	Color / Odor / Comments
Stabilization Criteria		± 10%	± 3%	± 10%	± 0.1	± 10 mV	± 10% or <10		
1325	1.3	19.07	0.140	8.19	5.81	133.7	Out of range	18.1	
1335	2.6	18.51	0.143	4.52	5.80	124.3	out of range	18.1	
1345	3.9	18.88	0.139	6.77	5.86	123	Out of range	18.1	
1355	5.2	19.19	0.141	6.70	5.84	121.7	1000	18.1	
1405	7.8	19.10	0.140	5.52	5.88	120.5	248	18.1	
1415	10.4	19.12	0.140	8.78	5.84	127.4	220	18.1	
1455	13	19.14	0.140	5.58	5.89	119.8	102	18.1	
1515	15.6	19.10	0.140	5.44	5.88	120.6	45.4	18.1	
1535	18.2	18.91	0.141	5.40	5.85	121.4	19.7	18.1	

Analysis	Preservative	Container requirements	No. of containers
TAL metals	HNO_3	250mL poly	1
Dissolved TAL metals	HNO_3	↓	↓
Cr 6	—		

Observations/Notes: Purge Start Time: 1315 Purge Rate: 0.5L/min

MS/MSD Duplicate ID No.: MR02-GW02D-11C @ 1540

Signature(s):

CH2MHILL

GROUNDWATER SAMPLING DATA SHEET

Client: NAVFAC
Location: MCB CamLej
Event: WE-41 Groundwater Sampling
Date: 7/27 /2011
Weather: 90's Overcast

Project Number:
Well ID: MR02-IR69-MW14
Sample ID: MR 02-IR69-MW14-11C
Sampling Team: G. Couch, C. Waldrow, D. Seal

Total Depth: 15.15 FT.(BTOC)
Depth to water: (-) 7.75 FT.(BTOC)
Water Column: 7.4 FT.
(x) .163 GAL/FT.
Well Volume: 1.206 GAL. x3 = 3.61
Total Purge Vol.: ~~1.205~~ 5.5 GAL.
Purge Device: Bladder Pump
Pump Inlet Depth 13 FT.(BTOC)

Measuring Device: YSI 556# 13076
HANNA# 09036

Well Dia. (inches)	Volume (gallons/foot)
1	0.041
1.25	0.064
2	0.163
4	0.653
6	1.469

SAMPLE DATA

Date: 07-27-11 / Time: 1057	Temp. °C	Cond. mS/cm	DO mg/L	pH SU	ORP mV	Turbidity NTU	Color / Odor / Comments
Method: Low Flow	21.76	0.092	3.6	3.74	161.4	5.77	clear / no odor

FIELD PARAMETERS

Purge Vol (gals)	Time	Purge Vol. (gals)	Temp. °C	Cond. mS/cm	DO mg/L	pH SU	ORP mV	Turbidity NTU	Depth to water (ft bgs)	Color / Odor / Comments
	Stabilization Criteria		± 10%	± 3%	± 10%	± 0.1	± 10 mV	± 10% or <10		
.55	1007	~~.105~~	21.13	0.086	8.6	3.26	259.8	7.75	7.45	clear / no odor
1.1	1012	.220	21.57	0.085	12.5	3.27	236.3	7.75	7.49	" "
1.65	1017	.375	21.36	0.086	11.5	3.76	196.3	32.20	7.49	" "
2.2	1022	.480	21.81	0.089	7.1	3.76	170.5	13.70	7.49	" "
2.75	1027	.585	21.77	0.091	5.7	3.76	163.4	12.10	7.49	" "
3.3	1032	.690	21.71	0.093	4.4	3.72	161.5	10.70	7.49	" "
3.85	1037	.795	21.70	0.095	3.9	3.72	161.5	9.80	7.50	" "
4.4	1042	.900	21.75	0.097	3.7	3.74	160.6	8.37	7.50	" "
4.95	1047	1.005	21.76	0.092	3.6	3.74	161.2	7.40	7.50	" "
5.5	1052	1.110	21.77	0.092	3.5	3.74	161.1	6.25	7.50	" "
	1057	1.205	21.76	0.092	3.6	3.74	161.4	5.77	7.50	" "

Analysis	Preservative	Container requirements	No. of containers
TAL Metals	HNO_3	250 mL poly	1

Observations/Notes: Purge Start Time: ~~1007~~ 1002 Purge Rate: 400 mL/min

purge = 400 mL/min

MS/MSD Duplicate ID No.:

Signature(s):

CH2MHILL

GROUNDWATER SAMPLING DATA SHEET

Client: NAVFAC
Location: MCB CamLej
Event: WE-41 Groundwater Sampling
Date: 7/ 27 /2011
Weather: 90's Partly Cloudy

Project Number:
Well ID: MR02-MW01
Sample ID: MR02-GW01-11
Sampling Team: G. Couch, D. Seed, C. Walker

Total Depth: 25.0 FT.(BTOC)
Depth to water: (-) 14.10 FT.(BTOC)
Water Column: 10.90 FT.
(x) .163 GAL/FT.
Well Volume: 1.77 GAL.
Total Purge Vol.: ~~[illegible]~~ GAL.
(Done) 3.63
Purge Device: Bladder Pump

Pump Inlet Depth 23 FT.(BTOC)

Measuring Device: YSI 556# 13076
HANNA# 09036

Well Dia. (inches)	Volume (gallons/foot)
1	0.041
1.25	0.064
2	0.163
4	0.653
6	1.469

SAMPLE DATA

Date: 07-27-11 Time: 1400	Temp. °C	Cond. mS/cm	DO mg/L	pH SU	ORP mV	Turbidity NTU	Color / Odor / Comments
Method: Low flow	19.56	0.159	37.5	5.25	127.4	9.77	clear / no odor

FIELD PARAMETERS

Time	Purge Vol. (gals)	Temp. °C	Cond. mS/cm	DO mg/L	pH SU	ORP mV	Turbidity NTU	Depth to water (ft bgs)	Color / Odor / Comments
Stabilization Criteria		± 10%	± 3%	± 10%	± 0.1	± 10 mV	± 10% or <10		
1310	0.33	20.41	0.191	61.1	4.40	175.8	33.9	14.55	clear / none
1315	0.66	19.85	0.186	48.3	4.67	159.5	34.5	14.58	" "
1320	0.99	19.79	0.182	46.0	5.03	143.8	35.5	14.59	" "
1325	1.32	19.83	0.175	41.3	5.26	127.8	33.1	14.59	" "
1330	1.65	19.60	0.171	40.3	5.16	128.0	28.2	14.59	" "
1335	1.98	19.57	0.169	38.8	5.11	134.1	25.1	14.59	" "
1340	2.31	19.61	0.165	38.1	5.17	132.7	21.1	14.59	" "
1345	2.64	19.49	0.162	38.0	5.19	131.6	16.5	14.59	" "
1350	2.97	19.48	0.161	36.0	5.20	131.7	15.1	14.59	" "
1355	3.3	19.42	0.159	36.0	5.22	129.8	10.5	14.59	" "
1400	3.63	19.56	0.159	37.5	5.25	127.4	9.77	14.59	

Analysis	Preservative	Container requirements	No. of containers
TAL Metals	HNO_3	250 mL poly	1
Dissolved TAL Metals	HNO_3	↓	1
Dissolved Cr 6	~~[illegible]~~	↓	1

Observations/Notes: Purge Start Time: ~~1310~~ 1300 Done

Purge Rate: 250mL/min

MS/MSD

Duplicate ID No.:

Signature(s): [illegible]

CH2MHILL

GROUNDWATER SAMPLING DATA SHEET

Client: NAVFAC
Location: MCB CamLej
Event: WE-41 Groundwater Sampling
Date: 7/27 /2011
Weather: 90's Sunny

Project Number:
Well ID: MR 02-MW04
Sample ID: MR 02-GW04-11C
Sampling Team: G. Cash. D. Sneal. C. Wohlen

Total Depth: 15 FT.(BTOC)
Depth to water: (-) 8.29 FT.(BTOC)
Water Column: 6.71 FT.
(x) .163 GAL/FT.
Well Volume: 1.093 GAL. x 3 = 3.28
Total Purge Vol.: Dns [redacted] GAL.
2.8
Purge Device: Bladder Pump

Pump Inlet Depth 13 FT.(BTOC)

Measuring Device: YSI 556# 17153
HANNA# 09036

Well Dia. (inches)	Volume (gallons/foot)
1	0.041
1.25	0.064
2	0.163
4	0.653
6	1.469

SAMPLE DATA

Date: 07-27-11 Time: 1605	Temp. °C	Cond. mS/cm	DO mg/L	pH SU	ORP mV	Turbidity NTU	Color / Odor / Comments
Method: Low Flow	21.16	0.167	2.5	6.01	-93.1	2.06	clear / Rotten Eggs

FIELD PARAMETERS

Time	Purge Vol. (gals)	Temp. °C	Cond. mS/cm	DO mg/L	pH SU	ORP mV	Turbidity NTU	Depth to water (ft bgs)	Color / Odor / Comments
Stabilization Criteria		± 10%	± 3%	± 10%	± 0.1	± 10 mV	± 10% or <10		
0.4 1535	~~21.91~~	21.91	0.175	15.5	5.89	18.4	9.77	8.49	clear / Rotten Eggs
1540	0.8	21.41	0.171	5.6	6.26	-62.3	8.18	8.66	" "
1545	1.2	21.26	0.170	4.2	6.39	-78.7	10.0	8.68	" "
1550	1.6	21.25	0.169	3.5	6.56	-87.7	3.2	8.68	" "
1555	2.0	21.19	0.167	2.7	6.00	-82.3	2.07	8.71	" "
1600	2.4	21.23	0.165	2.6	5.91	-84.1	2.13	8.74	" "
1605	2.8	21.16	0.167	2.5	6.01	-93.1	2.06	8.77	" "

Analysis	Preservative	Container requirements	No. of containers
TAL metals	HNO_3	250 mL poly	1

Observations/Notes: Purge Start Time: ~~1535~~ 1530 Dns Purge Rate: 300 mL/min

MS/MSD Duplicate ID No.:

Signature(s): [signature]

CH2MHILL

GROUNDWATER SAMPLING DATA SHEET

Client: NAVFAC
Location: MCB CamLej
Event: WE-41 Groundwater Sampling
Date: 7/ 27 /2011
Weather: Raining 70°

Project Number:
Well ID: MR02-IR69-GW12
Sample ID: MR02-IR69-MW12
Sampling Team: D. Seed/RDU; C. Walden/GNV

Total Depth: 12.5 FT.(BTOC)
Depth to water: (-) 5.70 FT.(BTOC)
Water Column: 6.8 FT.
(x) .163 GAL/FT.
Well Volume: 1.10 GAL X 3 = 3.3
Total Purge Vol.: 6.6 GAL.

Measuring Device: YSI 556# 11519
HANNA# 09026

Purge Device: Bladder Pump

Pump Inlet Depth 10 FT.(BTOC)

Well Dia. (inches)	Volume (gallons/foot)
1	0.041
1.25	0.064
2	0.163
4	0.653
6	1.469

SAMPLE DATA

Date: 7/28/11 Time: 0950	Temp. °C	Cond. mS/cm	DO mg/L	pH SU	ORP mV	Turbidity NTU	Color / Odor / Comments
Method: well dry	22.75	0.168	3.88	5.73	112.3	143	DTW - 8.82

FIELD PARAMETERS

Time	Purge Vol. (gals)	Temp. °C	Cond. mS/cm	DO mg/L	pH SU	ORP mV	Turbidity NTU	Depth to water (ft bgs)	Color / Odor / Comments
Stabilization Criteria		± 10%	± 3%	± 10%	± 0.1	± 10 mV	± 10% or <10		
1050	1.1	21.23	.127	2.01	6.08	-39.1	120	6.7	Green, sulfur
1100	2.2	21.08	.129	.97	6.29	-35.8	110	8.98	" "
1110	3.3	21.21	.129	.98	5.85	-15	80.0	8.25	" "
1120	4.4	20.64	.121	3.42	6.21	-31.2	73.6	9.6	" "
1130	5.5	20.08	.119	3.05	6.22	-37.5	70.5	9.85	" "
1140	6.6	19.31	.118	2.81	6.24	-46.4	201.1	10.02	" "
1215									→ Pump rate change to .34 min due to drawdown
1225		19.18	.120	4.9	6.47	60.5	160	11.10	
1228									→ well dry Will come back to sample

Analysis	Preservative	Container requirements	No. of containers
TAL Metals	HNO_3	250 ml poly	1

Observations/Notes: Purge Start Time: 1040 Purge Rate: 0.4 L/min

Switched to 0.34 min @ 1215

Returned 7/28/11 to collect sample

MS/MSD Duplicate ID No.:

Signature(s):

CH2MHILL

GROUNDWATER SAMPLING DATA SHEET

Client: NAVFAC
Location: MCB CamLej
Event: WE-41 Groundwater Sampling
Date: 7/28 /2011
Weather: 80°

Project Number:
Well ID: MR02-MW03
Sample ID: MR02-GW03-NC
Sampling Team: D. Seed/RDV

Total Depth: 30 FT.(BTOC)
Depth to water: (-) 19.4 FT.(BTOC)
Water Column: 10.6 FT.
(x) 0.163 GAL/FT.
Well Volume: 1.72 GAL. x3 = 5.1
Total Purge Vol.: 5.5 GAL.

Purge Device: Bladder Pump

Pump Inlet Depth 25 FT.(BTOC)

Measuring Device: YSI 556# 13076
HANNA# 09026

Well Dia. (inches)	Volume (gallons/foot)
1	0.041
1.25	0.064
2	0.163
4	0.653
6	1.469

SAMPLE DATA

Date: 7/28/11 Time: 1120	Temp. °C	Cond. mS/cm	DO mg/L	pH SU	ORP mV	Turbidity NTU	Color / Odor / Comments
Method: Low flow	19.59	0.533	1.38	7.24	10.4	5.69	

FIELD PARAMETERS

Time	Purge Vol. (gals)	Temp. °C	Cond. mS/cm	DO mg/L	pH SU	ORP mV	Turbidity NTU	Depth to water (ft bgs)	Color / Odor / Comments
Stabilization Criteria		± 10%	± 3%	± 10%	± 0.1	± 10 mV	± 10% or <10		
1040	1.1	19.46	0.587	2.85	7.30	142.5	76.2	22.1	
1050	2.2	19.37	0.578	2.47	7.22	131.7	38.6	22.1	
1100	3.5	19.54	0.567	2.01	7.17	84.7	21.7	22.1	
1110	4.4	19.57	0.547	1.52	7.15	33.6	10.8	22.1	
1120	5.5	19.59	0.533	1.38	7.24	10.4	5.69	22.1	

Analysis	Preservative	Container requirements	No. of containers
TAL metals	HNO_3	250 ml poly	1

Observations/Notes: Purge Start Time: 1030 Purge Rate: 0.4L/min

MS/MSD | Duplicate ID No.:

Signature(s): [signature]

CH2MHILL

GROUNDWATER SAMPLING DATA SHEET

Client: NAVFAC
Location: MCB CamLej
Event: WE-41 Groundwater Sampling
Date: 7/ 28 /2011
Weather: 75°

Project Number:
Well ID: MR02-mw09
Sample ID: MR02-GW09-11C
Sampling Team: D. Seed/RPU

Total Depth: 20.5 FT.(BTOC)
Depth to water: (-) 11.14 FT.(BTOC)
Water Column: 9.36 FT.
(x) 0.163 GAL/FT.
Well Volume: 1.52 GAL x 3 = 4.57
Total Purge Vol.: 5.2 GAL.

Measuring Device: YSI 556# 13076
HANNA# 09026

Purge Device: Bladder Pump

Pump Inlet Depth 15 FT.(BTOC)

Well Dia. (inches)	Volume (gallons/foot)
1	0.041
1.25	0.064
2	0.163
4	0.653
6	1.469

SAMPLE DATA

Date: 7/28/11 Time: 1240	Temp. °C	Cond. mS/cm	DO mg/L	pH SU	ORP mV	Turbidity NTU	Color / Odor / Comments
Method: Low flow	18.92	0.104	0.59	4.86	55.4	13.2	

FIELD PARAMETERS

Time	Purge Vol. (gals)	Temp. °C	Cond. mS/cm	DO mg/L	pH SU	ORP mV	Turbidity NTU	Depth to water (ft bgs)	Color / Odor / Comments
Stabilization Criteria		± 10%	± 3%	± 10%	± 0.1	± 10 mV	± 10% or <10		
1210	1.3	19.07	0.104	2.10	4.90	52.4	39.8	12.25	
1220	2.6	19.01	0.104	0.93	4.73	60.1	22.6	12.25	
1230	3.9	19.00	0.104	0.72	4.84	57.2	16.2	12.25	
1240	5.2	18.92	0.104	0.59	4.86	55.4	13.2	12.25	

Analysis	Preservative	Container requirements	No. of containers
TAL metals	HNO_3	250 mL poly	1

Observations/Notes: Purge Start Time: 1200 Purge Rate: 0.5L/min

MS/MSD Duplicate ID No.:

Signature(s):

CH2MHILL

GROUNDWATER SAMPLING DATA SHEET

Client: NAVFAC
Location: MCB CamLej
Event: WE-41 Groundwater Sampling
Date: 7/28 /2011
Weather: 90's Sunny

Project Number:
Well ID: MR 02-MW03
Sample ID: MR 02 GW05-11C
Sampling Team: G. Cook, D. Seed, C. Waldon

Total Depth: 21.0 FT.(BTOC)
Depth to water: (-) 12.96 FT.(BTOC)
Water Column: 9.04 FT.
(x) .163 GAL/FT.
Well Volume: 1.473 GAL. x 3 = 4.42
Total Purge Vol.: 8 GAL.

Purge Device: Bladder Pump

Pump Inlet Depth 19 FT.(BTOC)

Measuring Device: YSI 556# 17153
HANNA# 09036

Well Dia. (inches)	Volume (gallons/foot)
1	0.041
1.25	0.064
2	0.163
4	0.653
6	1.469

SAMPLE DATA

Date: 07-27-11 Time: 1255	Temp. °C	Cond. mS/cm	DO mg/L	pH SU	ORP mV	Turbidity NTU	Color / Odor / Comments
Method: Low Flow	18.17	0.371	7.5	7.09	-35.1	10.6	

FIELD PARAMETERS

Time	Purge Vol. (gals)	Temp. °C	Cond. mS/cm	DO mg/L	pH SU	ORP mV	Turbidity NTU	Depth to water (ft bgs)	Color / Odor / Comments
Stabilization Criteria		± 10%	± 3%	± 10%	± 0.1	± 10 mV	± 10% or <10		
1130	–	19.25	0.381	21.3	6.71	49.1	522	12.01	cloudy/no odor
1135	–	18.46	0.380	14.2	7.06	1.4	368	12.03	" "
1140	–	18.32	0.380	11.2	7.21	-11.8	278	12.03	" "
1145	–	18.27	0.380	10.0	7.19	-13.1	215	12.03	" "
1150	–	18.21	0.381	8.9	7.16	-19.0	191	12.03	" "
1155	–	18.09	0.380	8.8	7.12	-14	168	12.03	" "
1200	–	18.13	0.378	8.4	7.07	-17.5	110	12.03	" "
1205	–	18.12	0.371	8.7	7.03	-16.3	78.7	12.03	" "
1210	–	18.13	0.370	8.9	6.96	-16.0	68.7	12.03	" "
1215	–	18.02	0.366	8.8	6.97	-23	44.6	12.03	" "

Analysis	Preservative	Container requirements	No. of containers
TAL Metals	HNO_3	250 mL poly	1
Dissolved Metals	↓	↓	↓
Dissolved Cr 6	–	↓	↓

Observations/Notes: Purge Start Time: 1130 Purge Rate: 400 mL/min

MS/MSD | Duplicate ID No.:

Signature(s):

CH2MHILL

GROUNDWATER SAMPLING DATA SHEET

Client: NAVFAC
Location: MCB CamLej
Event: WE-41 Groundwater Sampling
Date: 7/ 28 /2011
Weather: 90's Partly Cloudy

Project Number:
Well ID: MR02 - MW05
Sample ID: MR02 - GW05-11
Sampling Team: G. Covch, D. Seed, C. Wolder

Total Depth: 21.0 FT.(BTOC)
Depth to water: (-) 11.96 FT.(BTOC)
Water Column: 9.04 FT.
(x) .163 GAL/FT.
Well Volume: 1.473 GAL. x3 = 4.42
Total Purge Vol.: 8 GAL.

Purge Device: Bladder Pump

Pump Inlet Depth 19 FT.(BTOC)

Measuring Device: YSI 556# 17153
HANNA# 09036

Well Dia. (inches)	Volume (gallons/foot)
1	0.041
1.25	0.064
2	0.163
4	0.653
6	1.469

SAMPLE DATA

Date: 07-28-11 Time: 1255	Temp. °C	Cond. mS/cm	DO mg/L	pH SU	ORP mV	Turbidity NTU	Color / Odor / Comments
Method: Low Flow	18.17	0.371	7.5	7.09	-35.1	10.6	

FIELD PARAMETERS

Time	Purge Vol. (gals)	Temp. °C	Cond. mS/cm	DO mg/L	pH SU	ORP mV	Turbidity NTU	Depth to water (ft bgs)	Color / Odor / Comments
Stabilization Criteria		± 10%	± 3%	± 10%	± 0.1	± 10 mV	± 10% or <10		
1220	—	18.06	0.365	8.3	6.96	-21.8	26.8	12.03	clear / no odor
1225	—	18.03	0.367	8.2	7.05	-34.0	25.5	12.03	clear / no odor
1230	—	18.06	0.368	8.0	7.04	-36.0	24.5	12.03	" "
1235	—	18.05	0.370	8.1	7.05	-36.0	20.1	12.03	" "
1240	—	18.03	0.370	7.9	7.06	-36.0	16.9	12.06	" "
1245	—	18.01	0.370	7.6	7.06	-34.9	15.0	12.06	" "
1250	—	18.07	0.371	7.6	7.08	-35.4	12.1	12.07	" "
1255	8	18.17	0.371	7.5	7.09	-35.1	10.6	12.09	" "

Analysis	Preservative	Container requirements	No. of containers
TAL Metals	HNO_3	250 mL poly	1
Dissolved Metals	HNO_3	↓	1
Dissolved Cr 6	—		1

Observations/Notes: Purge Start Time: 1130 Purge Rate: 400 mL/min

MS/MSD ✓ Duplicate ID No.:

Signature(s): [signature]

CH2MHILL

GROUNDWATER SAMPLING DATA SHEET

Client: NAVFAC
Location: MCB CamLej
Event: WE-41 Groundwater Sampling
Date: 7/28 /2011
Weather: 90's Partly Cloudy

Project Number:
Well ID: MR02 - ~~MW02~~ IR69-MW13
Sample ID: MR 02-IR69-GW13-11C
Sampling Team: G. Couch, J. Seed, C. Welder

Total Depth: 13.5 FT.(BTOC)
Depth to water: (-) 7.11 FT.(BTOC)
Water Column: 6.39 FT.
(x) .163 GAL/FT.
Well Volume: 1.041 GAL. X3= 3.12
Total Purge Vol.: 2.25 GAL.

Purge Device: Bladder Pump

Pump Inlet Depth 11.5 FT.(BTOC)

Measuring Device: YSI 556# 17153
HANNA# 09036

Well Dia. (inches)	Volume (gallons/foot)
1	0.041
1.25	0.064
2	0.163
4	0.653
6	1.469

SAMPLE DATA

Date: 07-28-11 Time: 1035	Temp. °C	Cond. mS/cm	DO mg/L	pH SU	ORP mV	Turbidity NTU	Color / Odor / Comments
Method: Low Flow	21.64	0.137	13.2	4.50	210.0	10.2	

FIELD PARAMETERS

Time	Purge Vol. (gals)	Temp. °C	Cond. mS/cm	DO mg/L	pH SU	ORP mV	Turbidity NTU	Depth to water (ft bgs)	Color / Odor / Comments
Stabilization Criteria		± 10%	± 3%	± 10%	± 0.1	± 10 mV	± 10% or <10		
0955	–	21.92	0.150	66.0	4.42	261.7	118	7.79	cloudy/No odor
1000	–	21.19	0.144	67.8	4.63	276.8	107	8.19	" "
1005	–	21.28	0.142	48.6	4.55	231.9	32.5	8.95	" "
1010	–	21.25	0.141	44.2	4.63	224.7	24.7	8.98	clear/No odor
1015	–	21.23	0.137	27.1	4.56	220.8	22.7	9.65	" "
1020	–	21.21	0.138	16.7	4.47	212.5	19.5	9.78	" "
1025	–	21.58	0.140	12.8	4.41	214.2	14.3	9.88	" "
1030	–	21.63	0.140	12.1	4.42	216.0	11.2	9.97	" "
1035	2.25	21.64	0.137	13.2	4.50	210.0	10.2	10.05	" "

Analysis	Preservative	Container requirements	No. of containers
TAL Metals	HNO_3	250 mL	2

Observations/Notes: Purge Start Time: 0955 Purge Rate: 400 mL/min

1020 change Flow rate to 300 mL/min

MS/MSD Duplicate ID No.:

Signature(s): [signature]

Appendix E
Munitions Debris Disposal Documents

DD FORM 1348-1A, JUL 91 ISSUE RELEASE/RECEIPT DOCUMENT S/N 0102-LF-114-5000

1	2	3	4	5	6	7	23	24	25	26	27	28	29	45	46	47	48	49	50	51	52	53	54	55	56	57	58	59	60	61	62	63	64	65	66	67	68	69	70	71	72	73	74	75	76	77	78	79	80
DOC	IDENT		RI FROM		M&S		UNIT	ISS	QUANTITY					SER	SUPPLEMENTARY ADDRESS				SIG	EUND	DISTRIBUTION		PROJECT		PRI	REQD	DEL	DATE	ADV		RI				O/P	COND	MGT													

UNIT PRICE DOLLARS	CTS	DOLLARS	CTS

1. TOTAL PRICE | 2. SHIP FROM | 3. SHIP TO

4. MARK FOR

LB 100

5. DOC	6. NMFC	7. FRT RATE	8. TYPE CARGO	9. PS

10. QTY. REC"D	11. UP	12. UNIT WEIGHT	13. UNIT CUBE	14. UFC	15. SL
1		100 lbs	55 gal		

16. FREIGHT CLASSIFICATION NOMENCLATURE

17. ITEM NOMENCLATURE

MDAS - Munitions Debris

18. TY CONT	19. NO CONT	20. TOTAL WEIGHT	21. TOTAL CUBE

22. RECEIVED BY	23. DATE RECEIVED

24 DOCUMENT NUMBER & SUFFIX (30-44)

25 NATIONAL STOCK NO & ADD (8-22)

26 RIC (4-6) UI (23-24) QTY (25-29) CON CODE (71) DIST (55-56) UP (74-80)

Drum ID: #1; Seal Number ULINE 325653
MDAS - Material Deemed as Safe
Removed under WE-41. UXO-02. -07. -11. & -21

CH2M HILL, Project Manager
Keith LaTorre
2095 Lakeside Centre Way, Suite 200
Knoxville, TN 37922
865-769-3204

27 ADDITIONAL DATA

"This certifies that material listed has been 100 percent properly inspected and to the best of our knowledge and belief, is inert and/or free of explosives or related materials."

James Keesee

Certifier: James Keesee, SUXOS, USAE, 813-343-6370

Verifier: CH2M HILL Agent: Cliff Walden, 352-514-9022

Appendix F
Technical Memorandum: UXO-02
Missed QC Seed Items

Missed QC Seed Items at Site UXO-02

PREPARED FOR: NAVFAC Atlantic

COPY TO: Keith LaTorre/CH2M Hill

PREPARED BY: Andy Gascho/CH2M Hill

DATE: March 22, 2012

PROJECT NUMBER: 418824

NAEVA Geophysics, CH2M HILL's geophysical subcontractor, conducted a transect-based digital geophysical mapping (DGM) survey at Site UXO-02, Marine Corp Base Camp Lejeune (MCB CamLej), North Carolina, from February 16 through February 25, 2010. The survey was conducted using an EM61-MK2 time-domain electromagnetic induction detector. Positional information was obtained using fiducial positioning marks placed in the data files to tie the detector response to professionally surveyed stakes placed along the transect. The transects were spaced at nominal intervals of 10 meters on center, and each transect consisted of two one-meter wide EM61-MK2 lanes with the centers separated by approximately 1.5 meters.

Small industry standard objects (ISO) were previously buried as blind quality control (QC) seed items. Seventeen of the nineteen QC seed items were identified as anomalies in the DGM data and were recovered during intrusive investigation operations at Site UXO-02. The two missing QC seed items were DGM surveyed on the same day, February 24, 2010. On this date the DGM survey traversed over three QC seed items. One QC seed item (number 15) was identified as an anomaly in the DGM data and was recovered during intrusive investigation operations, but the remaining two QC seed items (numbers 13 and 14) were not distinguishable as anomalies in the DGM data and consequently were not selected for intrusive investigation. The areas surveyed on February 24, 2010, including DGM data and QC seed locations, are shown in **Figure 1**.

A thorough investigation was conducted to determine the cause of the missed QC seed items for the DGM survey date of February 24, 2010. Based on the results of this investigation, CH2M HILL determined that the subject DGM data was reliable and of the same quality as the remainder of the DGM survey. A discussion of the cause of the missed QC seed items and the rationale for continued use of the DGM survey data follows.

Missed Quality Control Seed Items

Using blind QC seed items on transect surveys can be intrinsically problematic due to the difficulty of ensuring that the DGM system will pass directly over the QC seeds. The small ISOs used as QC seed items at Site UXO-02 were buried within six inches below ground surface, which produced geophysical response values averaging 35 millivolts (mv) for all UXO-02 QC seeds. This means it is virtually impossible to miss identifying a QC seed item if the system is functioning correctly and passes over the item. However, properly identifying the QC seed item requires the EM61-MK2 coil to pass almost directly over the item. This difficulty is minimized by burying QC seed items close to the transect centerline stakes over which the DGM system must pass to maintain positioning control, thus increasing the likelihood that the DGM system will pass over the buried QC seeds.

The transect centerline stakes emplaced by the professional land surveyor at UXO-02 erroneously extended more than 16 inches above the ground in some cases, requiring the EM61-MK2 to pass to either side of a stake rather than passing directly over it. This slight deviation from the transect path would cause the instrument to miss passing directly over a QC seed item that was buried close to one of these taller stakes, resulting in the possibility of the QC seed item not being detectable in the DGM data. Due to the other indicators of the high data quality during this survey, discussed below, this is the likely cause for the failure to identify QC seed items 13 and 14.

COPYRIGHT 2012 BY CH2M HILL, INC. • COMPANY CONFIDENTIAL

FIGURE 1
February 24, 2010, DGM Survey Area and Quality Control Seed Items

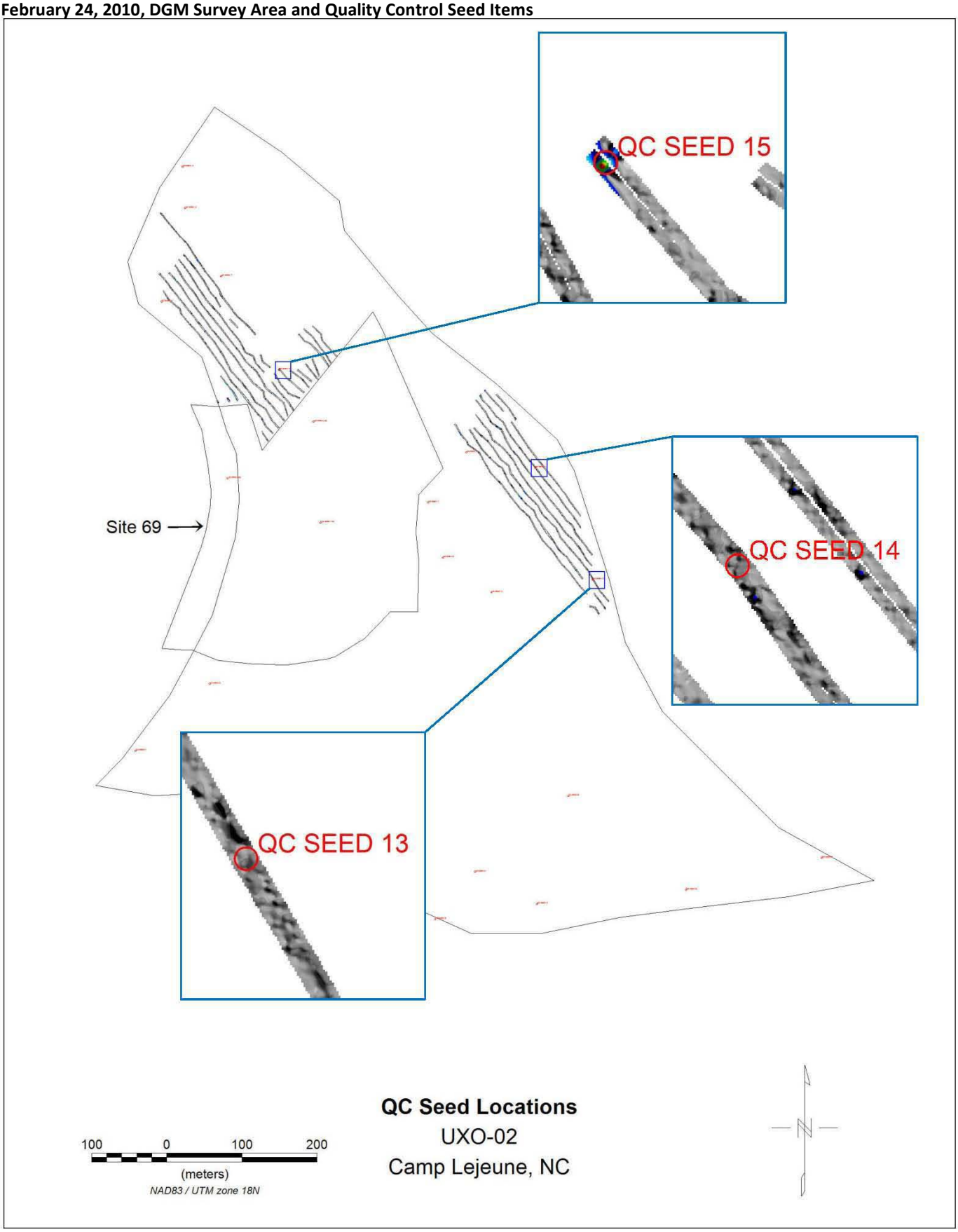

COPYRIGHT 2012 BY CH2M HILL, INC. • COMPANY CONFIDENTIAL

DGM Survey Data Quality Control

Daily QC tests conducted on February 24, 2010, demonstrate that the DGM system was functioning in accordance with project measurement quality objectives (MQOs). Three daily static calibration tests were conducted, all of which showed that the EM61-MK2 response to a small ISO was correct (**Figures 2 – 4**). A repeat line was surveyed at the end of the day along transect 18, the results of which showed consistency between the initial transect survey and the repeat transect survey (**Figure 5**).

Additional verification of both the DGM data quality and the positioning of the anomalies selected from the DGM data is found by examining the anomalies identified from the DGM data surveyed on February 24, 2010 and the results of the subsequent intrusive investigation of those anomalies. The anomaly list and associated dig results are included in **Attachment 1** and discussed below.

A total of 233 target anomalies were identified in the DGM data from February 24, 2010, and subsequently excavated during the intrusive investigation in October 2011. One munitions and explosives of concern (MEC) item, a MKII practice hand grenade, with an initial EM61-MK2 response of 28.5 mV, was recovered at anomaly UXO2_01_T9-2-00007. QC seed 15, with a response value of 48.7 mV, was recovered at anomaly UXO2_01_T10-1-00001. Sixteen material potentially presenting an explosive hazard (MPPEH) items were recovered with response values ranging from 3.1 – 366.5 mV. Cultural debris was recovered from 108 targets with response values ranging from 3.0 mV to 769 mV. The remaining 107 targets were no contacts, the largest of which had an initial EM61-MK2 response value of 4.0 mV. The no contact rate of 46% is high, but the consistently low response values of the no contacts (3.0 – 4.0 mV) indicates that the low response value threshold used for target anomaly selection at the project site resulted in the targeting of anomalies where the signal to noise ratio was too low to adequately distinguish between metallic sources and background noise.

DGM Survey Data Quality Assessment Summary

A thorough investigation of the daily QC test results, DGM data, and resulting intrusive investigation results from the February 24, 2010 DGM survey indicate that although two QC seed items were not identified in the DGM data, the data meets the project MQOs and is acceptable for use in characterizing the UXO-02 site with respect to the presence of MEC and MPPEH. The likely cause for the missed QC seed items is the deviation of the actual DGM transect survey path from the planned DGM survey path in order to avoid centerline fiducial stakes that, erroneously, were not driven deep enough for the EM61-MK2 system to pass directly over the QC seed items. This resulted in the EM61-MK2 system not passing over the two QC seed items which were buried near the transect survey stakes, which then resulted the DGM survey data not identifying these two QC items .

COPYRIGHT 2012 BY CH2M HILL, INC. • COMPANY CONFIDENTIAL

FIGURE 2
February 24, 2010, Static Test 1 Results

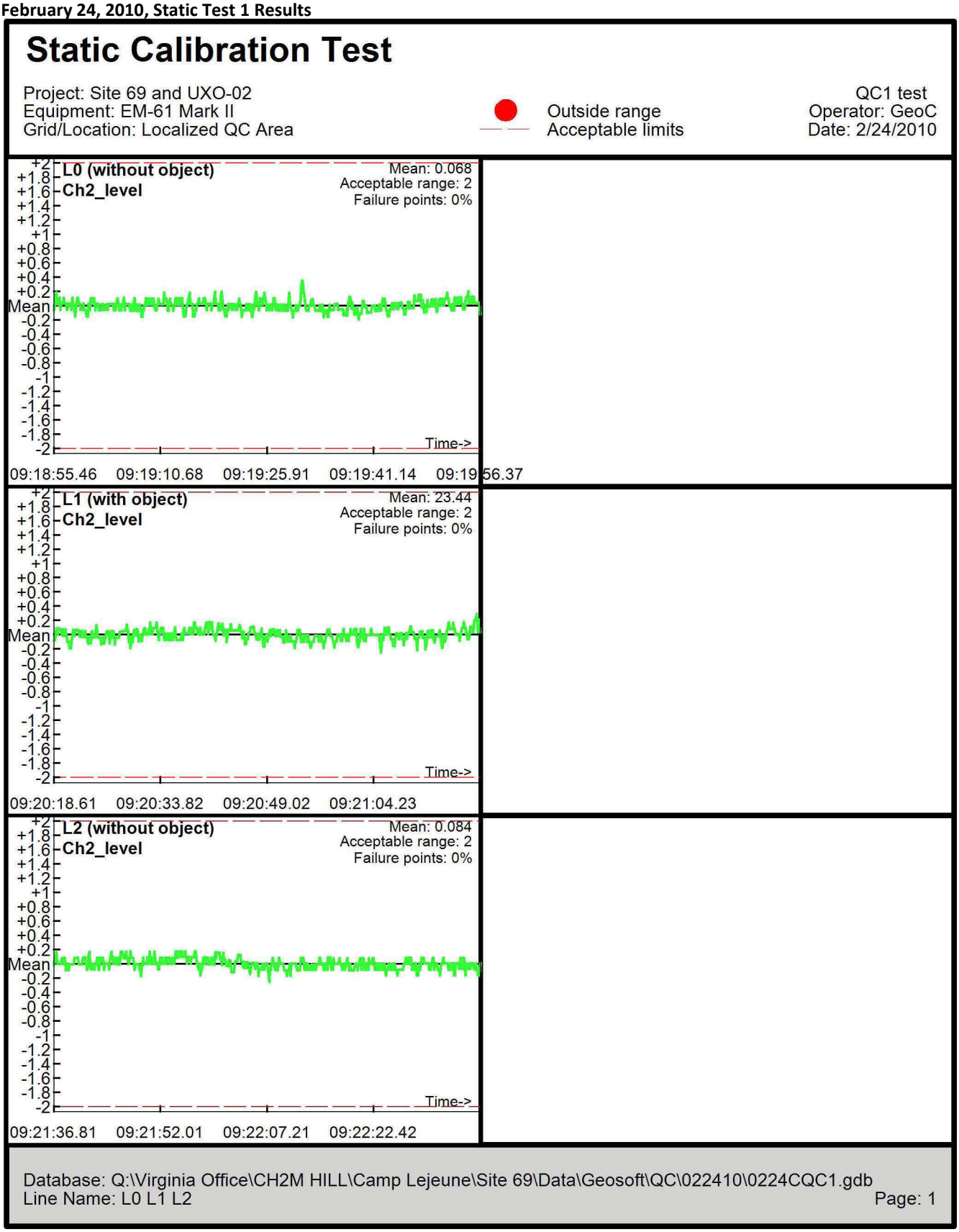

COPYRIGHT 2012 BY CH2M HILL, INC. • COMPANY CONFIDENTIAL

FIGURE 3
February 24, 2010, Static Test 2 Results

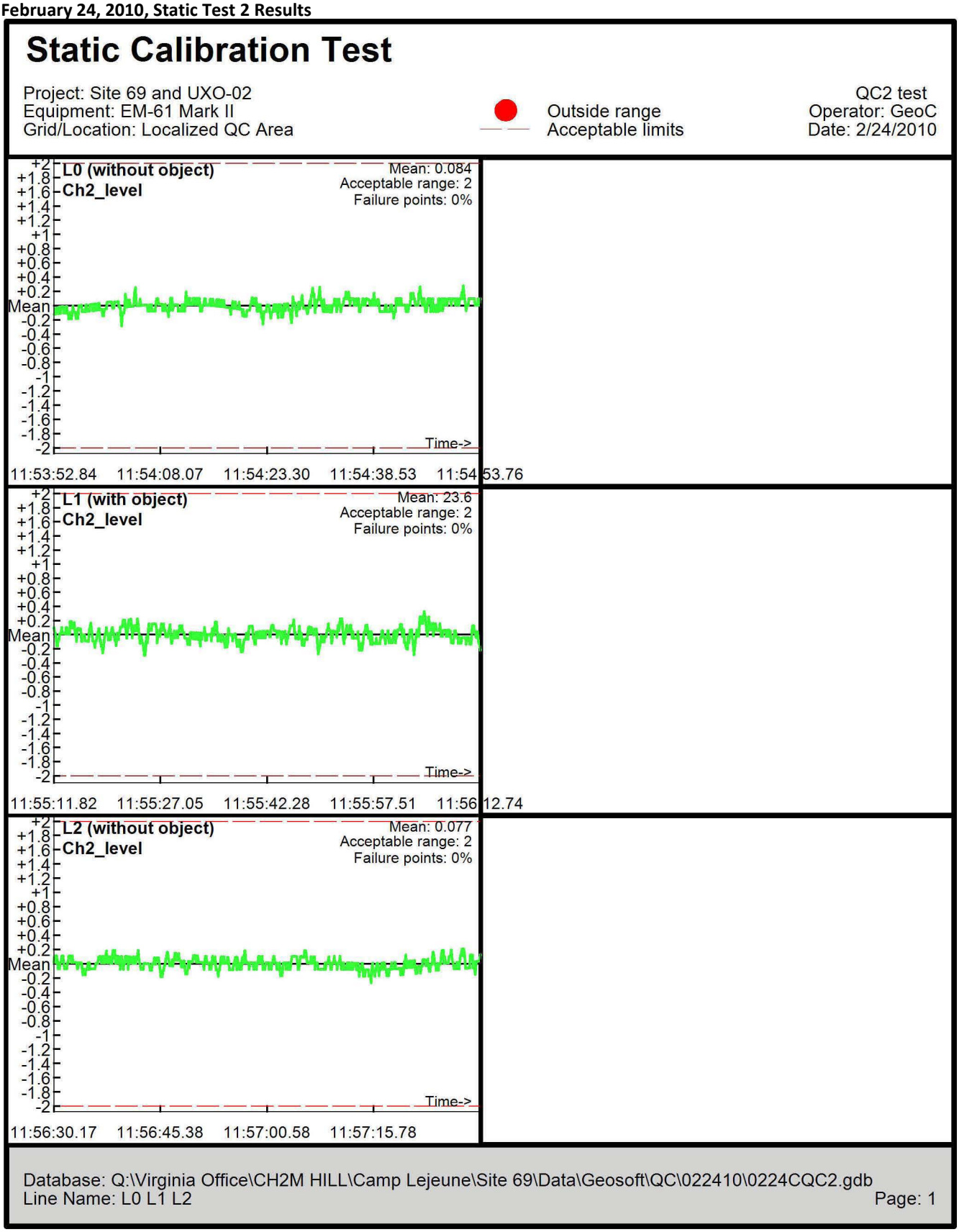

COPYRIGHT 2012 BY CH2M HILL, INC. • COMPANY CONFIDENTIAL

FIGURE 4
February 24, 2010, Static Test 3 Results

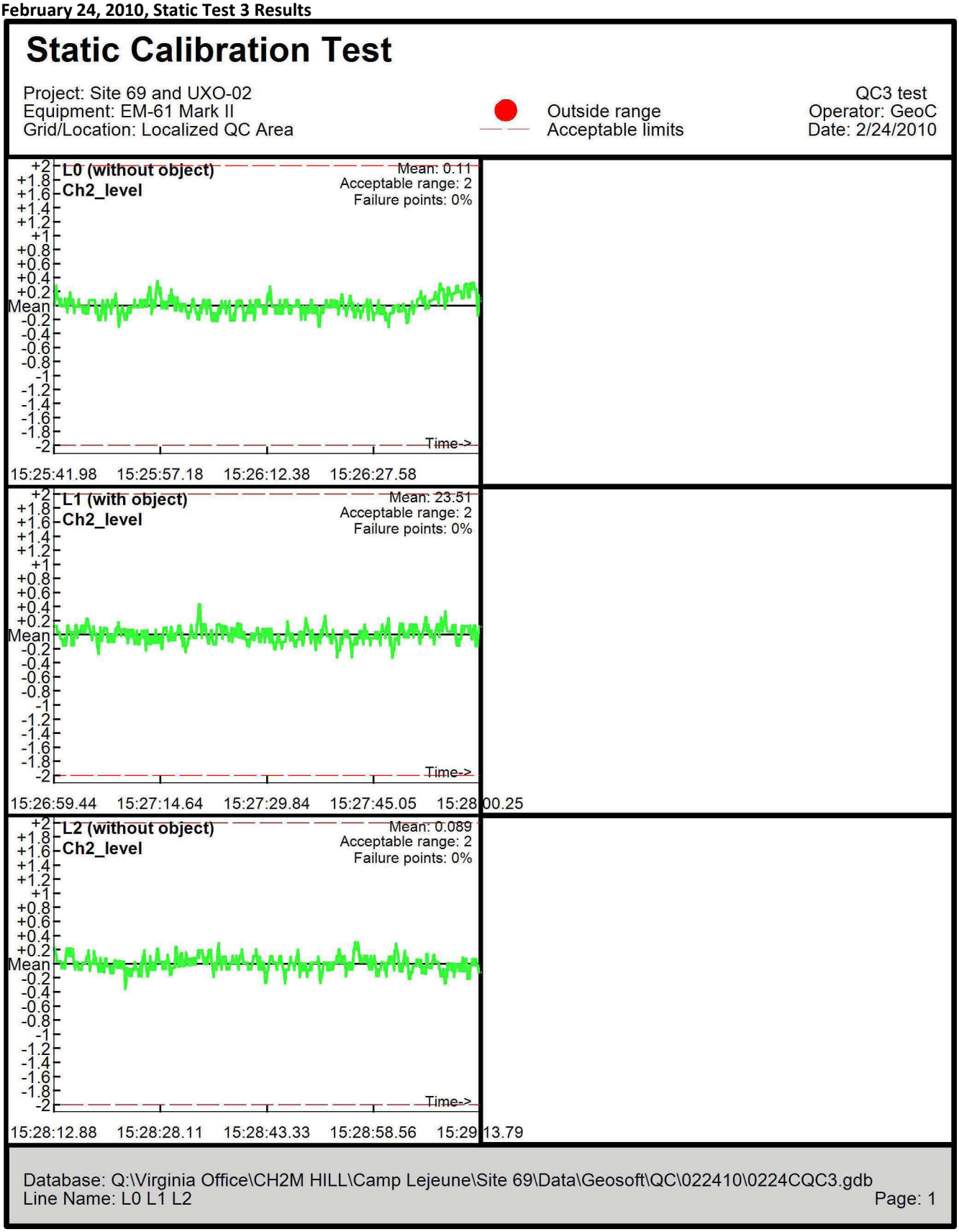

COPYRIGHT 2012 BY CH2M HILL, INC. • COMPANY CONFIDENTIAL

FIGURE 5
February 24, 2010, Repeat Data Test Results

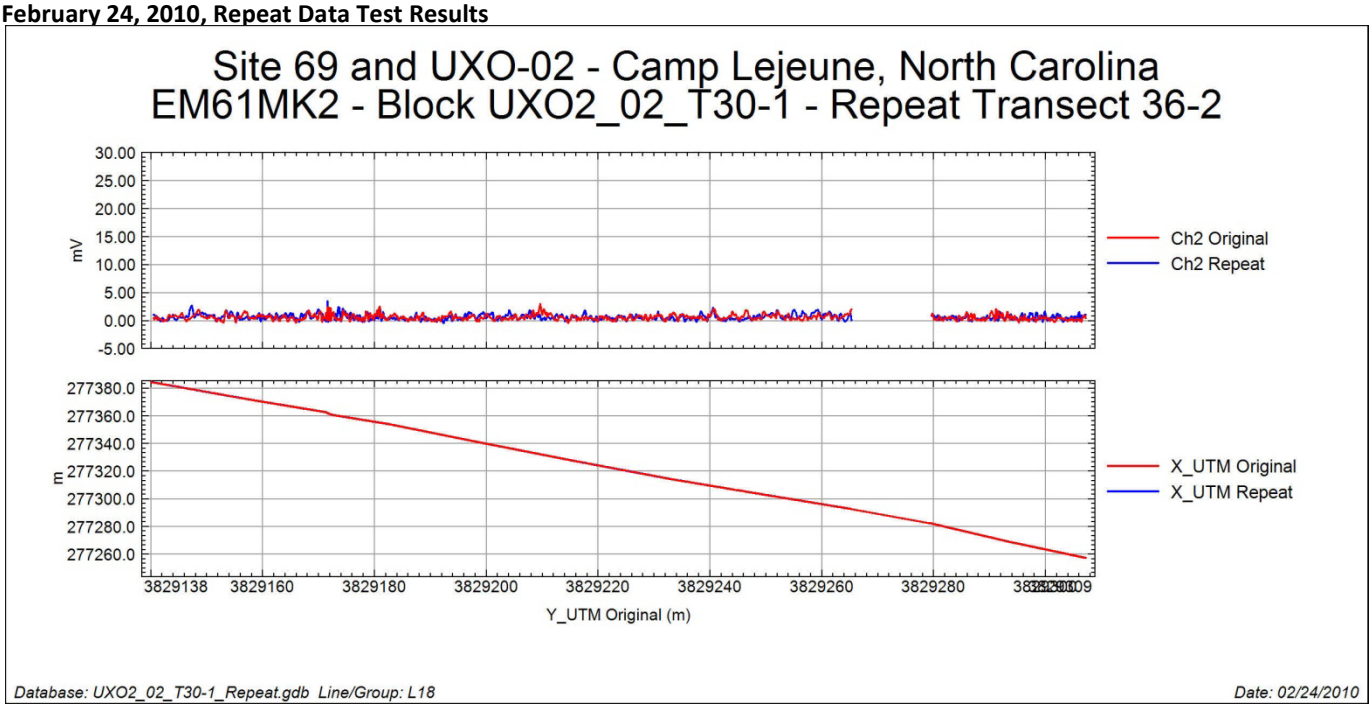

COPYRIGHT 2012 BY CH2M HILL, INC. • COMPANY CONFIDENTIAL

Attachment 1

Intrusive Investigation Results from February 24, 2010 DGM Survey

COPYRIGHT 2012 BY CH2M HILL, INC. • COMPANY CONFIDENTIAL

Anomaly Identification	Grid	Amplitude (millivolts)	Dig Date	Easting (UTM)	Northing (UTM)	Item Group	Item Class	Category
UXO2_01_T10-1-00001	UXO2_01_T10-1	48.7	10/11/2011	276983.10	3829334.10	QC	QC Seed	QC Seed
UXO2_01_T10-1-00002	UXO2_01_T10-1	3.6	10/11/2011	276941.70	3829391.30	No Contact	No Contact	N/A
UXO2_01_T10-1-00003	UXO2_01_T10-1	3.2	10/11/2011	276921.30	3829411.60	No Contact	No Contact	N/A
UXO2_01_T10-1-00004	UXO2_01_T10-1	11.4	10/11/2011	276883.60	3829465.40	Cultural Debris	Scrap	N/A
UXO2_01_T10-1-00005	UXO2_01_T10-1	7.0	9/30/2011	276874.30	3829479.00	Cultural Debris	Scrap	N/A
UXO2_01_T10-1-00006	UXO2_01_T10-1	11.2	10/11/2011	276825.50	3829541.50	Cultural Debris	Scrap	N/A
UXO2_01_T10-2-00001	UXO2_01_T10-2	3.5	10/11/2011	277016.30	3829304.30	No Contact	No Contact	N/A
UXO2_01_T10-2-00002	UXO2_01_T10-2	3.0	10/11/2011	276995.80	3829321.60	No Contact	No Contact	N/A
UXO2_01_T10-2-00003	UXO2_01_T10-2	9.6	10/11/2011	276984.00	3829335.20	Cultural Debris	Scrap	N/A
UXO2_01_T10-2-00004	UXO2_01_T10-2	3.5	10/11/2011	276942.60	3829392.40	No Contact	No Contact	N/A
UXO2_01_T10-2-00005	UXO2_01_T10-2	3.2	10/11/2011	276941.50	3829393.50	No Contact	No Contact	N/A
UXO2_01_T10-2-00006	UXO2_01_T10-2	3.0	10/11/2011	276940.10	3829394.70	No Contact	No Contact	N/A
UXO2_01_T10-2-00007	UXO2_01_T10-2	3.1	10/11/2011	276930.50	3829403.00	No Contact	No Contact	N/A
UXO2_01_T10-2-00008	UXO2_01_T10-2	93.9	10/11/2011	276906.90	3829432.90	Cultural Debris	Scrap	N/A
UXO2_01_T10-2-00009	UXO2_01_T10-2	3.4	10/11/2011	276903.50	3829441.30	MPPEH	Small Arms	Expended Cartridge Cases (7.62mm Blank)
UXO2_01_T10-2-00010	UXO2_01_T10-2	3.7	10/11/2011	276895.00	3829452.80	MPPEH	Small Arms	Expended Cartridge Cases (7.62mm Blank)
UXO2_01_T10-2-00011	UXO2_01_T10-2	3.2	10/11/2011	276884.80	3829465.70	No Contact	No Contact	N/A
UXO2_01_T10-2-00012	UXO2_01_T10-2	4.1	10/11/2011	276882.80	3829468.60	MPPEH	Small Arms	Expended Cartridge Cases (7.62mm Blank)
UXO2_01_T10-2-00013	UXO2_01_T10-2	5.0	10/11/2011	276879.80	3829473.10	Cultural Debris	Scrap	N/A
UXO2_01_T10-2-00014	UXO2_01_T10-2	3.5	10/11/2011	276872.10	3829484.40	No Contact	No Contact	N/A
UXO2_01_T10-2-00015	UXO2_01_T10-2	3.6	10/11/2011	276865.70	3829494.50	No Contact	No Contact	N/A
UXO2_01_T10-2-00016	UXO2_01_T10-2	3.3	10/11/2011	276865.20	3829495.30	No Contact	No Contact	N/A
UXO2_01_T10-2-00017	UXO2_01_T10-2	3.5	10/11/2011	276862.80	3829499.20	No Contact	No Contact	N/A
UXO2_01_T10-2-00018	UXO2_01_T10-2	5.8	10/11/2011	276858.60	3829504.40	Cultural Debris	Scrap	N/A
UXO2_01_T10-2-00019	UXO2_01_T10-2	3.5	10/11/2011	276857.40	3829505.70	No Contact	No Contact	N/A
UXO2_01_T10-2-00020	UXO2_01_T10-2	3.7	10/11/2011	276836.40	3829529.60	No Contact	No Contact	N/A
UXO2_01_T11-2-00001	UXO2_01_T11-2	3.4	10/12/2011	277015.90	3829319.50	Cultural Debris	Scrap	N/A
UXO2_01_T11-2-00002	UXO2_01_T11-2	7.0	10/12/2011	277015.00	3829320.60	Cultural Debris	Scrap	N/A
UXO2_01_T1-2-00001	UXO2_01_T1-2	3.7	10/11/2011	276902.50	3829290.30	No Contact	No Contact	N/A
UXO2_01_T12-2-00001	UXO2_01_T12-2	3.2	10/12/2011	277025.30	3829320.40	No Contact	No Contact	N/A
UXO2_01_T13-1-00001	UXO2_01_T13-1	3.0	10/12/2011	277020.80	3829337.50	No Contact	No Contact	N/A
UXO2_01_T13-1-00002	UXO2_01_T13-1	3.5	10/12/2011	277019.80	3829338.90	No Contact	No Contact	N/A
UXO2_01_T13-2-00001	UXO2_01_T13-2	3.3	10/12/2011	277032.70	3829324.50	No Contact	No Contact	N/A
UXO2_01_T14-1-00001	UXO2_01_T14-1	3.1	10/12/2011	277032.50	3829333.50	No Contact	No Contact	N/A
UXO2_01_T14-2-00001	UXO2_01_T14-2	4.8	10/12/2011	277033.60	3829334.00	Cultural Debris	Scrap	N/A
UXO2_01_T15-1-00001	UXO2_01_T15-1	3.1	10/12/2011	277037.30	3829354.10	No Contact	No Contact	N/A

Anomaly Identification	Grid	Amplitude (millivolts)	Dig Date	Easting (UTM)	Northing (UTM)	Item Group	Item Class	Category
UXO2_01_T15-1-00002	UXO2_01_T15-1	3.4	10/12/2011	277008.80	3829381.10	No Contact	No Contact	N/A
UXO2_01_T15-2-00001	UXO2_01_T15-2	74.0	10/12/2011	277047.50	3829342.20	Cultural Debris	Scrap	N/A
UXO2_01_T15-2-00002	UXO2_01_T15-2	3.8	10/12/2011	277014.20	3829376.30	No Contact	No Contact	N/A
UXO2_01_T16-1-00001	UXO2_01_T16-1	3.5	10/12/2011	277015.50	3829387.50	No Contact	No Contact	N/A
UXO2_01_T16-2-00001	UXO2_01_T16-2	3.3	10/12/2011	277032.60	3829371.80	No Contact	No Contact	N/A
UXO2_01_T2-2-00001	UXO2_01_T2-2	10.3	10/11/2011	276917.00	3829292.70	Cultural Debris	Scrap	N/A
UXO2_01_T2-2-00002	UXO2_01_T2-2	769.6	10/11/2011	276914.70	3829296.30	Cultural Debris	Scrap	N/A
UXO2_01_T3-1-00001	UXO2_01_T3-1	36.8	10/11/2011	276926.60	3829294.10	Cultural Debris	Scrap	N/A
UXO2_01_T3-1-00002	UXO2_01_T3-1	3.0	10/11/2011	276917.40	3829309.00	No Contact	No Contact	N/A
UXO2_01_T3-1-00003	UXO2_01_T3-1	29.4	10/11/2011	276912.30	3829315.50	Cultural Debris	Scrap	N/A
UXO2_01_T4-1-00001	UXO2_01_T4-1	16.3	10/11/2011	276960.00	3829267.80	Cultural Debris	Scrap	N/A
UXO2_01_T4-1-00002	UXO2_01_T4-1	5.1	10/11/2011	276954.80	3829274.10	Cultural Debris	Scrap	N/A
UXO2_01_T4-1-00003	UXO2_01_T4-1	251.8	10/11/2011	276942.70	3829289.20	Facility Resource	Facility Resource	Fence
UXO2_01_T4-1-00004	UXO2_01_T4-1	3.5	10/11/2011	276834.00	3829429.90	No Contact	No Contact	N/A
UXO2_01_T4-1-00005	UXO2_01_T4-1	3.9	10/11/2011	276831.70	3829433.50	No Contact	No Contact	N/A
UXO2_01_T4-2-00001	UXO2_01_T4-2	3.5	10/11/2011	276953.60	3829277.10	MPPEH	Small Arms	Expended Cartridge Cases (7.62mm Blank)
UXO2_01_T4-2-00002	UXO2_01_T4-2	3.7	10/11/2011	276925.50	3829312.50	MPPEH	Small Arms	Expended Cartridge Cases (7.62mm Blank)
UXO2_01_T4-2-00003	UXO2_01_T4-2	3.6	10/11/2011	276918.70	3829320.40	MPPEH	Small Arms	Expended Cartridge Cases (7.62mm Blank)
UXO2_01_T4-2-00004	UXO2_01_T4-2	4.7	10/11/2011	276885.30	3829369.60	Cultural Debris	Scrap	N/A
UXO2_01_T4-2-00005	UXO2_01_T4-2	3.7	10/11/2011	276884.90	3829370.00	Cultural Debris	Scrap	N/A
UXO2_01_T4-2-00006	UXO2_01_T4-2	3.2	10/11/2011	276877.50	3829380.50	MPPEH	Small Arms	Expended Cartridge Cases (7.62mm Blank)
UXO2_01_T4-2-00007	UXO2_01_T4-2	3.4	10/11/2011	276864.30	3829395.30	No Contact	No Contact	N/A
UXO2_01_T5-1-00001	UXO2_01_T5-1	4.0	10/11/2011	276953.30	3829289.10	Cultural Debris	Scrap	N/A
UXO2_01_T5-1-00002	UXO2_01_T5-1	3.1	10/11/2011	276951.10	3829290.70	MPPEH	Small Arms	Expended Cartridge Cases (7.62mm Blank)
UXO2_01_T5-1-00003	UXO2_01_T5-1	3.0	10/11/2011	276904.60	3829357.70	No Contact	No Contact	N/A
UXO2_01_T5-1-00004	UXO2_01_T5-1	10.1	10/11/2011	276883.80	3829385.00	Cultural Debris	Scrap	N/A
UXO2_01_T5-1-00005	UXO2_01_T5-1	16.8	10/11/2011	276875.10	3829396.00	Cultural Debris	Scrap	N/A
UXO2_01_T5-1-00006	UXO2_01_T5-1	3.9	10/11/2011	276832.40	3829451.30	No Contact	No Contact	N/A
UXO2_01_T5-2-00001	UXO2_01_T5-2	3.9	10/11/2011	276948.20	3829297.50	MPPEH	Small Arms	Expended Cartridge Cases (7.62mm Blank)
UXO2_01_T5-2-00002	UXO2_01_T5-2	366.5	10/11/2011	276937.10	3829313.10	MPPEH	Small Arms	Expended Cartridge Cases (7.62mm Blank)
UXO2_01_T5-2-00003	UXO2_01_T5-2	19.0	10/11/2011	276935.10	3829315.60	Cultural Debris	Scrap	N/A
UXO2_01_T5-2-00004	UXO2_01_T5-2	4.1	10/11/2011	276908.90	3829353.70	Cultural Debris	Scrap	N/A
UXO2_01_T5-2-00005	UXO2_01_T5-2	3.1	10/11/2011	276908.50	3829354.30	No Contact	No Contact	N/A
UXO2_01_T5-2-00006	UXO2_01_T5-2	3.1	10/11/2011	276905.90	3829358.20	No Contact	No Contact	N/A
UXO2_01_T5-2-00007	UXO2_01_T5-2	3.1	10/11/2011	276896.90	3829371.70	No Contact	No Contact	N/A
UXO2_01_T5-2-00008	UXO2_01_T5-2	5.8	10/11/2011	276885.40	3829385.50	Cultural Debris	Scrap	N/A

COPYRIGHT 2012 BY CH2M HILL, INC. • COMPANY CONFIDENTIAL

Anomaly Identification	Grid	Amplitude (millivolts)	Dig Date	Easting (UTM)	Northing (UTM)	Item Group	Item Class	Category
UXO2_01_T5-2-00009	UXO2_01_T5-2	52.8	10/11/2011	276876.60	3829396.50	Cultural Debris	Scrap	N/A
UXO2_01_T5-2-00010	UXO2_01_T5-2	3.9	10/11/2011	276866.80	3829409.00	Cultural Debris	Scrap	N/A
UXO2_01_T5-2-00011	UXO2_01_T5-2	3.3	10/11/2011	276865.40	3829410.80	No Contact	No Contact	N/A
UXO2_01_T5-2-00012	UXO2_01_T5-2	4.4	10/11/2011	276856.90	3829421.30	Cultural Debris	Scrap	N/A
UXO2_01_T5-2-00013	UXO2_01_T5-2	3.1	10/11/2011	276824.90	3829461.50	No Contact	No Contact	N/A
UXO2_01_T6-1-00001	UXO2_01_T6-1	6.2	10/11/2011	276964.70	3829294.60	MPPEH	Small Arms	Expended Cartridge Cases (7.62mm Blank)
UXO2_01_T6-1-00002	UXO2_01_T6-1	30.6	10/11/2011	276905.20	3829372.60	MPPEH	Small Arms	Expended Cartridge Cases (7.62mm Blank)
UXO2_01_T6-1-00003	UXO2_01_T6-1	44.2	10/11/2011	276845.00	3829452.70	Cultural Debris	Scrap	N/A
UXO2_01_T6-1-00004	UXO2_01_T6-1	3.5	10/11/2011	276836.00	3829462.70	No Contact	No Contact	N/A
UXO2_01_T6-2-00001	UXO2_01_T6-2	3.2	10/11/2011	276988.70	3829268.70	No Contact	No Contact	N/A
UXO2_01_T6-2-00002	UXO2_01_T6-2	3.6	10/11/2011	276947.40	3829318.60	No Contact	No Contact	N/A
UXO2_01_T6-2-00003	UXO2_01_T6-2	3.3	10/11/2011	276898.90	3829382.10	No Contact	No Contact	N/A
UXO2_01_T6-2-00004	UXO2_01_T6-2	3.9	10/11/2011	276898.20	3829382.90	No Contact	No Contact	N/A
UXO2_01_T6-2-00005	UXO2_01_T6-2	3.1	10/11/2011	276872.80	3829416.50	No Contact	No Contact	N/A
UXO2_01_T6-2-00006	UXO2_01_T6-2	3.1	10/11/2011	276852.80	3829445.70	No Contact	No Contact	N/A
UXO2_01_T7-1-00001	UXO2_01_T7-1	104.9	10/11/2011	276972.40	3829303.10	Cultural Debris	Scrap	N/A
UXO2_01_T7-1-00002	UXO2_01_T7-1	3.3	10/11/2011	276969.80	3829305.10	No Contact	No Contact	N/A
UXO2_01_T7-1-00003	UXO2_01_T7-1	16.9	10/11/2011	276949.30	3829334.30	Cultural Debris	Scrap	N/A
UXO2_01_T7-1-00004	UXO2_01_T7-1	25.2	10/11/2011	276926.30	3829361.90	Cultural Debris	Scrap	N/A
UXO2_01_T7-2-00001	UXO2_01_T7-2	4.8	10/11/2011	276992.20	3829281.20	Cultural Debris	Scrap	N/A
UXO2_01_T7-2-00002	UXO2_01_T7-2	3.7	10/11/2011	276975.10	3829302.80	No Contact	No Contact	N/A
UXO2_01_T7-2-00003	UXO2_01_T7-2	4.0	10/11/2011	276963.40	3829315.20	Cultural Debris	Scrap	N/A
UXO2_01_T7-2-00004	UXO2_01_T7-2	3.1	10/11/2011	276941.60	3829343.20	No Contact	No Contact	N/A
UXO2_01_T7-2-00005	UXO2_01_T7-2	3.4	10/11/2011	276926.40	3829363.50	No Contact	No Contact	N/A
UXO2_01_T7-2-00006	UXO2_01_T7-2	4.0	10/11/2011	276891.80	3829406.90	Cultural Debris	Scrap	N/A
UXO2_01_T7-2-00007	UXO2_01_T7-2	3.1	10/11/2011	276889.00	3829410.40	No Contact	No Contact	N/A
UXO2_01_T7-2-00008	UXO2_01_T7-2	3.7	10/11/2011	276878.00	3829424.70	No Contact	No Contact	N/A
UXO2_01_T7-2-00009	UXO2_01_T7-2	3.7	10/11/2011	276877.40	3829425.70	No Contact	No Contact	N/A
UXO2_01_T7-2-00010	UXO2_01_T7-2	3.3	10/11/2011	276876.30	3829427.50	No Contact	No Contact	N/A
UXO2_01_T7-2-00011	UXO2_01_T7-2	3.2	10/11/2011	276872.30	3829434.00	No Contact	No Contact	N/A
UXO2_01_T7-2-00012	UXO2_01_T7-2	3.6	10/11/2011	276850.40	3829464.90	No Contact	No Contact	N/A
UXO2_01_T8-1-00001	UXO2_01_T8-1	8.4	10/11/2011	276988.60	3829297.40	Cultural Debris	Scrap	N/A
UXO2_01_T8-1-00002	UXO2_01_T8-1	4.4	10/11/2011	276894.70	3829416.40	Cultural Debris	Scrap	N/A
UXO2_01_T8-2-00001	UXO2_01_T8-2	3.7	10/11/2011	276998.40	3829287.20	No Contact	No Contact	N/A
UXO2_01_T8-2-00002	UXO2_01_T8-2	3.1	10/11/2011	276996.20	3829290.80	No Contact	No Contact	N/A
UXO2_01_T8-2-00003	UXO2_01_T8-2	3.1	10/11/2011	276951.10	3829346.80	No Contact	No Contact	N/A

COPYRIGHT 2012 BY CH2M HILL, INC. • COMPANY CONFIDENTIAL

Anomaly Identification	Grid	Amplitude (millivolts)	Dig Date	Easting (UTM)	Northing (UTM)	Item Group	Item Class	Category
UXO2_01_T8-2-00004	UXO2_01_T8-2	3.2	10/11/2011	276950.40	3829348.70	MPPEH	Small Arms	Expended Cartridge Cases (7.62mm Blank)
UXO2_01_T8-2-00005	UXO2_01_T8-2	4.3	10/11/2011	276943.90	3829355.10	Cultural Debris	Scrap	N/A
UXO2_01_T8-2-00006	UXO2_01_T8-2	57.7	10/11/2011	276936.00	3829362.40	MPPEH	Small Arms	Expended Cartridge Cases (7.62mm Blank)
UXO2_01_T8-2-00007	UXO2_01_T8-2	3.7	10/11/2011	276897.30	3829415.50	No Contact	No Contact	N/A
UXO2_01_T8-2-00008	UXO2_01_T8-2	48.6	10/11/2011	276896.00	3829417.00	Cultural Debris	Scrap	N/A
UXO2_01_T8-2-00009	UXO2_01_T8-2	3.3	10/11/2011	276881.50	3829435.00	MPPEH	Small Arms	Expended Cartridge Cases (7.62mm Blank)
UXO2_01_T8-2-00010	UXO2_01_T8-2	3.5	10/11/2011	276877.60	3829440.70	Cultural Debris	Scrap	N/A
UXO2_01_T8-2-00011	UXO2_01_T8-2	3.3	10/11/2011	276865.80	3829459.40	No Contact	No Contact	N/A
UXO2_01_T8-2-00012	UXO2_01_T8-2	4.6	10/11/2011	276857.50	3829471.20	MPPEH	Small Arms	Expended Cartridge Cases (7.62mm Blank)
UXO2_01_T9-1-00001	UXO2_01_T9-1	3.9	10/14/2011	276976.30	3829328.80	No Contact	No Contact	N/A
UXO2_01_T9-1-00002	UXO2_01_T9-1	10.5	10/14/2011	276868.20	3829471.50	Cultural Debris	Scrap	N/A
UXO2_01_T9-1-00003	UXO2_01_T9-1	4.2	10/14/2011	276856.40	3829486.00	Cultural Debris	Scrap	N/A
UXO2_01_T9-1-00004	UXO2_01_T9-1	3.7	10/14/2011	276855.70	3829486.80	No Contact	No Contact	N/A
UXO2_01_T9-2-00001	UXO2_01_T9-2	3.5	10/12/2011	277010.50	3829296.90	No Contact	No Contact	N/A
UXO2_01_T9-2-00002	UXO2_01_T9-2	3.2	10/11/2011	276970.60	3829338.30	Cultural Debris	Scrap	N/A
UXO2_01_T9-2-00003	UXO2_01_T9-2	3.4	10/11/2011	276898.60	3829430.20	No Contact	No Contact	N/A
UXO2_01_T9-2-00004	UXO2_01_T9-2	3.5	10/11/2011	276883.00	3829453.20	Cultural Debris	Scrap	N/A
UXO2_01_T9-2-00005	UXO2_01_T9-2	46.1	10/11/2011	276869.70	3829471.60	Cultural Debris	Scrap	N/A
UXO2_01_T9-2-00006	UXO2_01_T9-2	28.4	10/11/2011	276869.20	3829472.10	Cultural Debris	Scrap	N/A
UXO2_01_T9-2-00007	UXO2_01_T9-2	28.5	10/14/2011	276867.20	3829474.60	MEC	Grenade	MKII, Hand, Practice, Standard
UXO2_01_T9-2-00008	UXO2_01_T9-2	3.7	10/14/2011	276857.60	3829486.40	No Contact	No Contact	N/A
UXO2_2_T30-1-00001	UXO2_2_T30-1	3.5	10/10/2011	277396.10	3829018.30	No Contact	No Contact	N/A
UXO2_2_T30-1-00002	UXO2_2_T30-1	3.2	10/10/2011	277312.80	3829140.40	No Contact	No Contact	N/A
UXO2_2_T30-1-00003	UXO2_2_T30-1	4.1	10/10/2011	277312.10	3829141.00	Cultural Debris	Scrap	N/A
UXO2_2_T30-1-00004	UXO2_2_T30-1	3.1	10/10/2011	277264.70	3829195.60	No Contact	No Contact	N/A
UXO2_2_T30-1-00005	UXO2_2_T30-1	3.9	10/10/2011	277253.70	3829215.00	No Contact	No Contact	N/A
UXO2_2_T30-1-00006	UXO2_2_T30-1	16.5	10/10/2011	277224.00	3829248.60	Cultural Debris	Scrap	N/A
UXO2_2_T30-2-00001	UXO2_2_T30-2	3.3	10/10/2011	277397.60	3829019.50	No Contact	No Contact	N/A
UXO2_2_T30-2-00002	UXO2_2_T30-2	114.7	10/10/2011	277308.40	3829145.80	Cultural Debris	Scrap	N/A
UXO2_2_T30-2-00003	UXO2_2_T30-2	26.9	10/10/2011	277276.80	3829185.20	Cultural Debris	Scrap	N/A
UXO2_2_T31-1-00001	UXO2_2_T31-1	34.0	10/10/2011	277377.50	3829067.60	Cultural Debris	Scrap	N/A
UXO2_2_T31-1-00002	UXO2_2_T31-1	3.7	10/10/2011	277361.20	3829088.00	No Contact	No Contact	N/A
UXO2_2_T31-1-00003	UXO2_2_T31-1	7.4	10/10/2011	277353.80	3829095.90	Cultural Debris	Scrap	N/A
UXO2_2_T31-1-00004	UXO2_2_T31-1	3.3	10/10/2011	277351.30	3829100.00	No Contact	No Contact	N/A
UXO2_2_T31-1-00005	UXO2_2_T31-1	8.2	10/10/2011	277345.00	3829108.90	Cultural Debris	Scrap	N/A
UXO2_2_T31-1-00006	UXO2_2_T31-1	3.2	10/10/2011	277335.10	3829122.10	Cultural Debris	Scrap	N/A

COPYRIGHT 2012 BY CH2M HILL, INC. • COMPANY CONFIDENTIAL

Anomaly Identification	Grid	Amplitude (millivolts)	Dig Date	Easting (UTM)	Northing (UTM)	Item Group	Item Class	Category
UXO2_2_T31-1-00007	UXO2_2_T31-1	3.2	10/10/2011	277334.10	3829123.60	No Contact	No Contact	N/A
UXO2_2_T31-1-00008	UXO2_2_T31-1	4.0	10/10/2011	277324.00	3829140.50	Cultural Debris	Scrap	N/A
UXO2_2_T31-1-00009	UXO2_2_T31-1	3.2	10/10/2011	277321.60	3829146.30	No Contact	No Contact	N/A
UXO2_2_T31-1-00010	UXO2_2_T31-1	3.0	10/10/2011	277319.40	3829148.30	No Contact	No Contact	N/A
UXO2_2_T31-1-00011	UXO2_2_T31-1	6.7	10/10/2011	277304.20	3829163.50	Cultural Debris	Scrap	N/A
UXO2_2_T31-1-00012	UXO2_2_T31-1	17.1	10/10/2011	277302.70	3829165.20	Cultural Debris	Scrap	N/A
UXO2_2_T31-1-00013	UXO2_2_T31-1	20.2	10/10/2011	277282.60	3829196.50	Cultural Debris	Scrap	N/A
UXO2_2_T31-1-00014	UXO2_2_T31-1	3.9	10/10/2011	277280.90	3829200.00	No Contact	No Contact	N/A
UXO2_2_T31-1-00015	UXO2_2_T31-1	4.8	10/10/2011	277258.40	3829221.30	Cultural Debris	Scrap	N/A
UXO2_2_T31-1-00016	UXO2_2_T31-1	3.4	10/10/2011	277251.90	3829228.70	No Contact	No Contact	N/A
UXO2_2_T31-2-00001	UXO2_2_T31-2	3.9	10/10/2011	277417.40	3829016.70	No Contact	No Contact	N/A
UXO2_2_T31-2-00002	UXO2_2_T31-2	4.5	10/10/2011	277378.80	3829068.10	Cultural Debris	Scrap	N/A
UXO2_2_T31-2-00003	UXO2_2_T31-2	34.7	10/10/2011	277346.50	3829109.30	Cultural Debris	Scrap	N/A
UXO2_2_T31-2-00004	UXO2_2_T31-2	3.0	10/10/2011	277344.30	3829112.30	No Contact	No Contact	N/A
UXO2_2_T31-2-00005	UXO2_2_T31-2	4.5	10/10/2011	277305.70	3829163.40	Cultural Debris	Scrap	N/A
UXO2_2_T31-2-00006	UXO2_2_T31-2	3.1	10/10/2011	277295.30	3829176.50	No Contact	No Contact	N/A
UXO2_2_T31-2-00007	UXO2_2_T31-2	9.1	10/10/2011	277292.20	3829180.90	Cultural Debris	Scrap	N/A
UXO2_2_T31-2-00008	UXO2_2_T31-2	8.7	10/10/2011	277264.00	3829217.30	Cultural Debris	Scrap	N/A
UXO2_2_T31-2-00009	UXO2_2_T31-2	22.1	10/10/2011	277245.80	3829240.40	Cultural Debris	Scrap	N/A
UXO2_2_T32-1-00001	UXO2_2_T32-1	3.2	10/10/2011	277388.40	3829073.20	No Contact	No Contact	N/A
UXO2_2_T32-1-00002	UXO2_2_T32-1	3.6	10/10/2011	277353.30	3829118.70	No Contact	No Contact	N/A
UXO2_2_T32-1-00003	UXO2_2_T32-1	3.1	10/10/2011	277329.90	3829147.40	No Contact	No Contact	N/A
UXO2_2_T32-1-00004	UXO2_2_T32-1	4.1	10/10/2011	277315.50	3829164.20	Cultural Debris	Scrap	N/A
UXO2_2_T32-1-00005	UXO2_2_T32-1	17.6	10/10/2011	277310.30	3829170.20	Cultural Debris	Scrap	N/A
UXO2_2_T32-1-00006	UXO2_2_T32-1	3.4	10/10/2011	277274.70	3829218.40	No Contact	No Contact	N/A
UXO2_2_T32-1-00007	UXO2_2_T32-1	22.0	10/10/2011	277265.30	3829232.40	Cultural Debris	Scrap	N/A
UXO2_2_T32-1-00008	UXO2_2_T32-1	4.2	10/10/2011	277259.90	3829239.10	Cultural Debris	Scrap	N/A
UXO2_2_T32-1-00009	UXO2_2_T32-1	3.0	10/10/2011	277241.90	3829256.30	No Contact	No Contact	N/A
UXO2_2_T32-2-00001	UXO2_2_T32-2	3.1	10/10/2011	277417.70	3829031.30	No Contact	No Contact	N/A
UXO2_2_T32-2-00002	UXO2_2_T32-2	20.3	10/10/2011	277261.10	3829239.60	Cultural Debris	Scrap	N/A
UXO2_2_T32-2-00003	UXO2_2_T32-2	75.3	10/10/2011	277252.50	3829246.80	Cultural Debris	Scrap	N/A
UXO2_2_T33-1-00001	UXO2_2_T33-1	3.9	10/10/2011	277339.50	3829147.40	No Contact	No Contact	N/A
UXO2_2_T33-1-00002	UXO2_2_T33-1	3.4	10/10/2011	277292.00	3829216.20	Cultural Debris	Scrap	N/A
UXO2_2_T33-1-00003	UXO2_2_T33-1	10.3	10/10/2011	277290.60	3829217.90	Cultural Debris	Scrap	N/A
UXO2_2_T33-1-00004	UXO2_2_T33-1	3.1	10/10/2011	277244.70	3829274.00	No Contact	No Contact	N/A
UXO2_2_T33-2-00001	UXO2_2_T33-2	4.3	10/10/2011	277384.20	3829095.80	Cultural Debris	Scrap	N/A

COPYRIGHT 2012 BY CH2M HILL, INC. • COMPANY CONFIDENTIAL

Anomaly Identification	Grid	Amplitude (millivolts)	Dig Date	Easting (UTM)	Northing (UTM)	Item Group	Item Class	Category
UXO2_2_T33-2-00002	UXO2_2_T33-2	4.4	10/10/2011	277382.10	3829098.50	Cultural Debris	Scrap	N/A
UXO2_2_T33-2-00003	UXO2_2_T33-2	4.6	10/10/2011	277371.70	3829110.90	Cultural Debris	Scrap	N/A
UXO2_2_T33-2-00004	UXO2_2_T33-2	3.4	10/10/2011	277314.00	3829182.90	No Contact	No Contact	N/A
UXO2_2_T33-2-00005	UXO2_2_T33-2	4.8	10/10/2011	277290.10	3829220.30	Cultural Debris	Scrap	N/A
UXO2_2_T34-1-00001	UXO2_2_T34-1	3.7	10/10/2011	277299.60	3829219.30	Cultural Debris	Scrap	N/A
UXO2_2_T34-1-00002	UXO2_2_T34-1	42.5	10/10/2011	277295.10	3829224.10	Cultural Debris	Scrap	N/A
UXO2_2_T34-1-00003	UXO2_2_T34-1	3.7	10/10/2011	277279.50	3829251.30	No Contact	No Contact	N/A
UXO2_2_T34-1-00004	UXO2_2_T34-1	22.8	10/10/2011	277277.10	3829255.00	Cultural Debris	Scrap	N/A
UXO2_2_T34-1-00005	UXO2_2_T34-1	10.1	10/10/2011	277273.70	3829257.10	Cultural Debris	Scrap	N/A
UXO2_2_T34-1-00006	UXO2_2_T34-1	7.6	10/10/2011	277272.10	3829258.20	Cultural Debris	Scrap	N/A
UXO2_2_T34-2-00001	UXO2_2_T34-2	3.3	10/10/2011	277380.50	3829113.90	No Contact	No Contact	N/A
UXO2_2_T34-2-00002	UXO2_2_T34-2	3.4	10/10/2011	277378.20	3829116.80	No Contact	No Contact	N/A
UXO2_2_T34-2-00003	UXO2_2_T34-2	4.2	10/10/2011	277376.50	3829121.10	Cultural Debris	Scrap	N/A
UXO2_2_T34-2-00004	UXO2_2_T34-2	3.9	10/10/2011	277376.10	3829122.00	No Contact	No Contact	N/A
UXO2_2_T34-2-00005	UXO2_2_T34-2	3.1	10/10/2011	277370.50	3829129.90	Cultural Debris	Scrap	N/A
UXO2_2_T34-2-00006	UXO2_2_T34-2	25.0	10/10/2011	277295.90	3829224.70	Cultural Debris	Scrap	N/A
UXO2_2_T34-2-00007	UXO2_2_T34-2	36.4	10/10/2011	277278.30	3829255.70	Cultural Debris	Scrap	N/A
UXO2_2_T34-2-00008	UXO2_2_T34-2	15.1	10/10/2011	277274.90	3829257.90	Cultural Debris	Scrap	N/A
UXO2_2_T34-2-00009	UXO2_2_T34-2	65.4	10/10/2011	277273.80	3829258.70	Cultural Debris	Scrap	N/A
UXO2_2_T34-2-00010	UXO2_2_T34-2	14.2	10/10/2011	277272.30	3829259.70	Cultural Debris	Scrap	N/A
UXO2_2_T34-2-00011	UXO2_2_T34-2	11.0	10/10/2011	277271.60	3829260.20	Cultural Debris	Scrap	N/A
UXO2_2_T34-2-00012	UXO2_2_T34-2	14.0	10/10/2011	277264.60	3829266.10	Cultural Debris	Scrap	N/A
UXO2_2_T35-1-00001	UXO2_2_T35-1	3.6	10/10/2011	277383.70	3829124.00	Cultural Debris	Scrap	N/A
UXO2_2_T35-1-00002	UXO2_2_T35-1	3.2	10/10/2011	277339.20	3829183.20	No Contact	No Contact	N/A
UXO2_2_T35-1-00003	UXO2_2_T35-1	4.0	10/10/2011	277336.50	3829186.40	No Contact	No Contact	N/A
UXO2_2_T35-1-00004	UXO2_2_T35-1	4.3	10/10/2011	277325.80	3829201.00	Cultural Debris	Scrap	N/A
UXO2_2_T35-1-00005	UXO2_2_T35-1	22.4	10/10/2011	277316.20	3829212.60	Cultural Debris	Scrap	N/A
UXO2_2_T35-1-00006	UXO2_2_T35-1	17.4	10/10/2011	277302.80	3829229.90	Cultural Debris	Scrap	N/A
UXO2_2_T35-1-00007	UXO2_2_T35-1	3.6	10/10/2011	277273.40	3829270.30	No Contact	No Contact	N/A
UXO2_2_T35-1-00008	UXO2_2_T35-1	14.4	10/10/2011	277251.10	3829297.40	Cultural Debris	Scrap	N/A
UXO2_2_T35-1-00009	UXO2_2_T35-1	47.8	10/10/2011	277250.10	3829299.40	Cultural Debris	Scrap	N/A
UXO2_2_T35-2-00001	UXO2_2_T35-2	24.8	10/10/2011	277317.30	3829212.90	Cultural Debris	Scrap	N/A
UXO2_2_T35-2-00002	UXO2_2_T35-2	16.7	10/10/2011	277304.00	3829230.20	Cultural Debris	Scrap	N/A
UXO2_2_T35-2-00003	UXO2_2_T35-2	38.8	10/10/2011	277251.70	3829299.70	Cultural Debris	Scrap	N/A
UXO2_2_T35-2-00004	UXO2_2_T35-2	10.0	10/10/2011	277251.30	3829300.50	Cultural Debris	Scrap	N/A
UXO2_2_T35-2-00005	UXO2_2_T35-2	37.9	10/10/2011	277251.00	3829301.20	Cultural Debris	Scrap	N/A

COPYRIGHT 2012 BY CH2M HILL, INC. • COMPANY CONFIDENTIAL

Anomaly Identification	Grid	Amplitude (millivolts)	Dig Date	Easting (UTM)	Northing (UTM)	Item Group	Item Class	Category
UXO2_2_T36-1-00001	UXO2_2_T36-1	3.2	10/10/2011	277376.50	3829149.20	No Contact	No Contact	N/A
UXO2_2_T36-1-00002	UXO2_2_T36-1	3.9	10/10/2011	277360.70	3829172.00	No Contact	No Contact	N/A
UXO2_2_T36-1-00003	UXO2_2_T36-1	4.5	10/10/2011	277335.40	3829203.40	Cultural Debris	Scrap	N/A
UXO2_2_T36-1-00004	UXO2_2_T36-1	3.1	10/10/2011	277330.10	3829210.00	No Contact	No Contact	N/A
UXO2_2_T36-1-00005	UXO2_2_T36-1	3.9	10/10/2011	277329.30	3829210.90	No Contact	No Contact	N/A
UXO2_2_T36-1-00006	UXO2_2_T36-1	17.8	10/10/2011	277314.30	3829230.60	Cultural Debris	Scrap	N/A
UXO2_2_T36-1-00007	UXO2_2_T36-1	20.9	10/10/2011	277310.40	3829236.40	Cultural Debris	Scrap	N/A
UXO2_2_T36-1-00008	UXO2_2_T36-1	5.5	10/10/2011	277298.10	3829254.70	Cultural Debris	Scrap	N/A
UXO2_2_T36-1-00009	UXO2_2_T36-1	3.5	10/10/2011	277294.90	3829259.40	No Contact	No Contact	N/A
UXO2_2_T36-1-00010	UXO2_2_T36-1	3.5	10/10/2011	277270.70	3829289.90	No Contact	No Contact	N/A
UXO2_2_T36-1-00011	UXO2_2_T36-1	3.5	10/10/2011	277267.90	3829292.80	No Contact	No Contact	N/A
UXO2_2_T36-1-00012	UXO2_2_T36-1	3.1	10/10/2011	277264.00	3829297.50	No Contact	No Contact	N/A
UXO2_2_T36-1-00013	UXO2_2_T36-1	11.4	10/10/2011	277256.40	3829306.40	Cultural Debris	Scrap	N/A
UXO2_2_T36-2-00001	UXO2_2_T36-2	3.7	10/10/2011	277362.10	3829171.60	No Contact	No Contact	N/A
UXO2_2_T37-1-00001	UXO2_2_T37-1	3.8	10/10/2011	277280.30	3829291.50	No Contact	No Contact	N/A
UXO2_2_T37-1-00002	UXO2_2_T37-1	3.8	10/10/2011	277271.50	3829301.00	No Contact	No Contact	N/A
UXO2_2_T37-2-00001	UXO2_2_T37-2	3.7	10/10/2011	277298.00	3829269.30	No Contact	No Contact	N/A

COPYRIGHT 2012 BY CH2M HILL, INC. • COMPANY CONFIDENTIAL

Appendix G
Analytical Data Screening Tables

TABLE G-1

Surface Soil Analytical Results

Site UXO-02 Expanded SI Report

MCIEAST-MCB CAMLEJ, North Carolina

Station ID	MR02-SS185	MR02-SS186	MR02-SS187	MR02-SS188		MR02-SS189	MR02-SS190	MR02-SS191
Sample ID	MR02-SS185-11C	MR02-SS186-11C	MR02-SS187-11C	MR02-SS188-11C	MR02-SS188D-11C	MR02-SS189-11C	MR02-SS190-11C	MR02-SS191-11C
Sample Date	07/12/11	07/12/11	07/12/11	07/12/11	07/12/11	07/12/11	07/12/11	07/12/11
Chemical Name								
Pesticides (µg/kg)								
Endrin	14 U	14 U	13 U	14 U	14 UJ	15 U	17 U	12 U
gamma-BHC (Lindane)	14 U	14 U	13 U	14 U	14 UJ	15 U	17 U	12 U

Notes:

U - The material was analyzed for, but not detected

UJ - Analyte not detected, quantitation limit may be inaccurate

µg/kg - Micrograms per kilogram

TABLE G-2

Sediment Analytical Results

Site UXO-02 Expanded SI Report

MCIEAST-MCB CAMLEJ, North Carolina

Station ID	MR02-SD11	MR02-SD12	MR02-SD13		MR02-SD14	MR02-SD15	MR02-SD16	MR02-SD17	MR02-SD18BG
Sample ID	MR02-SD11-11C	MR02-SD12-11C	MR02-SD13-11C	MR02-SD13D-11C	MR02-SD14-11C	MR02-SD15-11C	MR02-SD16-11C	MR02-SD17-11C	MR02-SD18BG-11C
Sample Date	07/12/11	07/12/11	07/12/11	07/12/11	07/12/11	07/12/11	07/12/11	07/12/11	07/12/11
Pesticides (µg/kg)									
4,4'-DDD	65 U	41 U	300 J	340	260 J	100 U	15 U	48	820 J
4,4'-DDE	65 U	41 U	270	330	220 J	100 U	15 U	63	120 J
4,4'-DDT	65 U	41 U	23 J	23 U	33 J	100 U	15 U	9.5 J	20 J
Aldrin	65 U	41 U	23 U	23 U	25 U	100 U	15 U	9.7 U	29 UJ
alpha-BHC	65 U	41 U	23 U	23 U	25 U	100 U	15 U	9.7 U	29 UJ
alpha-Chlordane	65 U	41 U	23 U	23 U	25 U	100 U	15 U	9.7 U	29 UJ
beta-BHC	65 U	41 U	23 U	23 U	25 U	100 U	15 U	9.7 U	29 UJ
delta-BHC	65 U	41 U	23 U	23 U	25 U	100 U	15 U	9.7 U	29 UJ
Dieldrin	65 U	41 U	23 U	23 U	25 U	100 U	15 U	9.7 U	29 UJ
Endosulfan I	65 U	41 U	23 U	23 U	25 U	100 U	15 U	9.7 U	29 UJ
Endosulfan II	65 U	41 U	23 U	23 U	25 U	100 U	15 U	9.7 U	29 UJ
Endosulfan sulfate	65 U	41 U	23 U	23 U	25 U	100 U	15 U	9.7 U	29 UJ
Endrin	65 U	41 U	23 U	23 U	25 U	100 U	15 U	9.7 U	29 UJ
Endrin aldehyde	65 U	41 U	23 U	23 U	25 U	100 U	15 U	9.7 U	29 UJ
Endrin ketone	65 U	41 U	23 U	23 U	25 U	100 U	15 U	9.7 U	29 UJ
gamma-BHC (Lindane)	65 U	41 U	23 U	23 U	25 U	100 U	15 U	9.7 U	29 UJ
gamma-Chlordane	65 U	41 U	23 U	23 U	25 U	100 U	15 U	9.7 U	29 UJ
Heptachlor	65 U	41 U	23 U	23 U	25 U	100 U	15 U	9.7 U	29 UJ
Heptachlor epoxide	65 U	41 U	23 U	23 U	25 U	100 U	15 U	9.7 U	29 UJ
Methoxychlor	65 U	41 U	23 U	23 U	25 U	100 U	15 U	9.7 U	29 UJ
Monocrotophos	650 U	820 U	470 UJ	450 U	490 U	1,000 U	150 U	190 U	590 U
Toxaphene	1,300 UJ	820 UJ	470 UJ	450 UJ	490 UJ	2,100 UJ	300 UJ	190 UJ	590 UJ
Wet Chemistry									
Total organic carbon (TOC) (mg/kg)	250,000	360,000	240,000	220,000	220,000	350,000	20,000	150,000	290,000

Notes:

Shading indicates detections

J - Analyte present, value may or may not be accurate or precise

U - The material was analyzed for, but not detected

UJ - Analyte not detected, quantitation limit may be inaccurate

mg/kg - Milligrams per kilogram

µg/kg - Micrograms per kilogram

TABLE G-3

Sediment Screening Results

Site UXO-02 Expanded SI Report

MCIEAST-MCB CAMLEJ, North Carolina

Station ID	**Adjusted Industrial Soil RSLs**	**Adjusted Residential Soil RSLs**	MR02-SD11	MR02-SD12	MR02-SD13		MR02-SD14	MR02-SD15	MR02-SD16	MR02-SD17	MR02-SD18BG
Sample ID			MR02-SD11-11C	MR02-SD12-11C	MR02-SD13-11C	MR02-SD13D-11C	MR02-SD14-11C	MR02-SD15-11C	MR02-SD16-11C	MR02-SD17-11C	MR02-SD18BG-11C
Sample Date			07/12/11	07/12/11	07/12/11	07/12/11	07/12/11	07/12/11	07/12/11	07/12/11	07/12/11
Chemical Name											
Pesticide/Polychlorinated Biphenyls (µg/kg)											
4,4'-DDD	7,200	2,000	65 U	41 U	300 J	340	260 J	100 U	15 U	48	820 J
4,4'-DDE	5,100	1,400	65 U	41 U	270	330	220 J	100 U	15 U	63	120 J
4,4'-DDT	7,000	1,700	65 U	41 U	23 J	23 U	33 J	100 U	15 U	9.5 J	20 J
Wet Chemistry											
Total organic carbon (TOC) (mg/kg)	--	--	250,000	360,000	240,000	220,000	220,000	350,000	20,000	150,000	290,000

Notes:

Shading indicates detections

J - Analyte present, value may or may not be accurate or precise

U - The material was analyzed for, but not detected

UJ - Analyte not detected, quantitation limit may be inaccurate

mg/kg - Milligrams per kilogram

µg/kg - Micrograms per kilogram

TABLE G-4

Groundwater Analytical Results

Site UXO-02 Expanded SI Report

MCIEAST-MCB CAMLEJ, North Carolina

Station ID	MR02-IR69-MW09	MR02-IR69-MW11	MR02-IR69-MW12	MR02-IR69-MW13	MR02-IR69-MW14	MR02-MW01	MR02-MW02		MR02-MW03	MR02-MW04	MR02-MW05
Sample ID	MR02-IR69-GW09-11C	MR02-IR69-GW11-11C	MR02-IR69-GW12-11C	MR02-IR69-GW13-11C	MR02-IR69-GW14-11C	MR02-GW01-11C	MR02-GW02-11C	MR02-GW02D-11C	MR02-GW03-11C	MR02-GW04-11C	MR02-GW05-11C
Sample Date	07/28/11	07/27/11	07/28/11	07/28/11	07/27/11	07/27/11	07/27/11	07/27/11	07/28/11	07/27/11	07/28/11
Chemical Name											
Total Metals (µg/l)											
Aluminum	716	1,050	5,340	1,070	327	147 J	2,500	2,440	78.6 J	2,570	237
Antimony	6.8 J	20 U	20 U	20 U	20 U	4.6 J	20 U	20 U	20 U	20 U	20 U
Arsenic	20 U	20 U	20 U	20 U	20 U	5.44 J	4.51 J	4.28 J	20 U	20 U	20 U
Barium	36.4	37.9	43.6	25.6	27.8	37.4	54.2	54.2	59	38.4	12.3
Beryllium	0.176 J	0.22 J	0.278 J	0.188 J	0.145 J	0.5 U	0.276 J	0.264 J	0.5 U	0.5 U	0.5 U
Cadmium	1 U	1 U	1 U	1 U	1 U	1 U	1 U	1 U	1 U	1 U	1 U
Calcium	3,830	941	2,770	1,040	1,820	14,600 J	3,240	3,220	76,700 J	1,070	29,400 J
Chromium	1.05 J	0.559 J	5.37 J	1.16 J	0.351 J	5 U	4.63 J	4.71 J	0.604 J	0.695 J	0.747 J
Cobalt	5 U	0.786 J	5 U	5 U	0.982 J	8.65 J	6.34 J	6.15 J	5 U	5 U	5 U
Copper	1.57 J	5 U	5 U	5 U	5 U	1.8 J	5 U	5 U	5 U	5 U	5 U
Iron	777	1,360	12,600 J	1,340	445	163	5,550 J	5,500 J	396	1,350	178
Lead	10 U	1.31 J	4.07 J	10 U	10 U	10 U	1.28 J	1.44 J	10 U	10 U	10 U
Magnesium	2,000	1,420	1,780	844	800	2,250	2,490	2,450	4,900	1,790	1,870
Manganese	26.3 J	20 U	31.9 J	20 U	20 U	42.5	223	220	109	20 U	20 U
Mercury	0.2 U	0.2 U	0.2 U	0.2 U	0.2 U	0.2 U	0.2 U	0.2 U	0.2 U	0.2 U	0.2 U
Nickel	5 U	5 U	5 U	5 U	5 U	22.2	7.97 J	7.93 J	5 U	5 U	5 U
Potassium	887 J	538 J	926 J	333 J	254 J	1,860	1,600	1,560	11,200	762 J	1,240
Selenium	20 U	20 U	20 U	20 U	20 U	20 U	20 U	20 U	20 U	20 U	20 U
Silver	5 U	5 U	5 U	5 U	5 U	5 U	5 U	5 U	5 U	5 U	5 U
Sodium	12,000	12,100	10,800	8,520	11,600	11,400	17,700	17,200	21,300	17,000	20,200
Thallium	20 U	20 U	20 U	20 U	20 U	20 U	20 U	20 U	20 U	20 U	20 U
Vanadium	1.34 J	5 U	8.17 J	0.831 J	5 U	5 U	5 U	5 U	1.4 J	2.64 J	1.93 J
Zinc	7.71 J	8.47 J	25.9	8.13 J	7.34 R	20.2 J	23.6 J	23.5 J	5 U	5 U	5 U
Dissolved Metals (µg/l)											
Aluminum, Dissolved	NA	NA	NA	NA	NA	49.5 J	42.7 J	100 U	NA	NA	100 U
Antimony, Dissolved	NA	NA	NA	NA	NA	20 U	20 U	20 U	NA	NA	20 U
Arsenic, Dissolved	NA	NA	NA	NA	NA	4.89 J	20 U	20 U	NA	NA	20 U
Barium, Dissolved	NA	NA	NA	NA	NA	36.7	40.2	40.9	NA	NA	10.6
Beryllium, Dissolved	NA	NA	NA	NA	NA	0.5 U	0.5 U	0.5 U	NA	NA	0.5 U
Cadmium, Dissolved	NA	NA	NA	NA	NA	1 U	1 U	1 U	NA	NA	1 U
Calcium, Dissolved	NA	NA	NA	NA	NA	14,600 J	3,170	3,180	NA	NA	29,300 J
Chromium, Dissolved	NA	NA	NA	NA	NA	5 U	5 U	5 U	NA	NA	5 U
Cobalt, Dissolved	NA	NA	NA	NA	NA	8.38 J	5.56 J	5.69 J	NA	NA	5 U
Copper, Dissolved	NA	NA	NA	NA	NA	5 U	5 U	5 U	NA	NA	5 U
Iron, Dissolved	NA	NA	NA	NA	NA	25 U	1,850	1,870	NA	NA	25 U
Lead, Dissolved	NA	NA	NA	NA	NA	10 U	10 U	10 U	NA	NA	10 U
Magnesium, Dissolved	NA	NA	NA	NA	NA	2,220	2,110	2,170	NA	NA	1,800
Manganese, Dissolved	NA	NA	NA	NA	NA	41.5	205	210	NA	NA	20 U
Mercury, Dissolved	NA	NA	NA	NA	NA	0.2 UJ	0.2 UJ	0.2 UJ	NA	NA	0.2 U
Nickel, Dissolved	NA	NA	NA	NA	NA	21.4	5.82 J	5.91 J	NA	NA	5 U
Potassium, Dissolved	NA	NA	NA	NA	NA	1,840	1,410	1,470	NA	NA	1,320
Selenium, Dissolved	NA	NA	NA	NA	NA	20 U	20 U	20 U	NA	NA	20 U
Silver, Dissolved	NA	NA	NA	NA	NA	5 U	5 U	5 U	NA	NA	5 U
Sodium, Dissolved	NA	NA	NA	NA	NA	11,200	17,700	17,500	NA	NA	19,800
Thallium, Dissolved	NA	NA	NA	NA	NA	20 U	20 U	20 U	NA	NA	20 U
Vanadium, Dissolved	NA	NA	NA	NA	NA	5 U	5 U	5 U	NA	NA	1.53 J
Zinc, Dissolved	NA	NA	NA	NA	NA	19.3	22.5	17.7	NA	NA	5 U
Dissolved Wet Chemistry (mg/l)											
Chromium (hexavalent), Dissolved	NA	NA	NA	NA	NA	0.015 U	0.015 U	0.015 U	NA	NA	0.015 U

Notes:

Shading indicates detections

J - Analyte present, value may or may not be accurate or precise

R - Unreliable Result

U - The material was analyzed for, but not detected

UJ - Analyte not detected, quantitation limit may be

mg/l - Milligrams per liter

µg/l - Micrograms per liter

TABLE G-5

Groundwater Screening Results

Site UXO-02 Expanded SI Report

MCIEAST-MCB CAMLEJ, North Carolina

Station ID	Camp Lejeune Background GW 2X Mean	NC2LGW (January, 2010) *	Adjusted Tap Water RSLs	MR02-IR69-MW09	MR02-IR69-MW11	MR02-IR69-MW12	MR02-IR69-MW13	MR02-IR69-MW14	MR02-MW01	MR02-MW02		MR02-MW03	MR02-MW04	MR02-MW05
Sample ID				MR02-IR69-GW09-11C	MR02-IR69-GW11-11C	MR02-IR69-GW12-11C	MR02-IR69-GW13-11C	MR02-IR69-GW14-11C	MR02-GW01-11C	MR02-GW02-11C	MR02-GW02D-11C	MR02-GW03-11C	MR02-GW04-11C	MR02-GW05-11C
Sample Date				07/28/11	07/27/11	07/28/11	07/28/11	07/27/11	07/27/11	07/27/11	07/27/11	07/28/11	07/27/11	07/28/11
Chemical Name														
Total Metals (µg/l)														
Aluminum	1,886	--	3,700	716	1,050	**5,340**	1,070	327	147 J	2,500	2,440	78.6 J	2,570	237
Antimony	3.28	6	1.5	**6.8 J**	20 U	20 U	20 U	20 U	**4.6 J**	20 U	20 U	20 U	20 U	20 U
Arsenic	5.77	10	0.045	20 U	20 U	20 U	20 U	20 U	**5.44 J**	**4.51 J**	**4.28 J**	20 U	20 U	20 U
Barium	86.2	700	730	36.4	37.9	43.6	25.6	27.8	37.4	54.2	54.2	59	38.4	12.3
Beryllium	0.308	4	7.3	0.176 J	0.22 J	0.278 J	0.188 J	0.145 J	0.5 U	0.276 J	0.264 J	0.5 U	0.5 U	0.5 U
Calcium	69,078	--	--	3,830	941	2,770	1,040	1,820	14,600 J	3,240	3,220	76,700 J	1,070	29,400 J
Chromium	3.13	10	0.043	**1.05 J**	**0.559 J**	**5.37 J**	**1.16 J**	**0.351 J**	5 U	**4.63 J**	**4.71 J**	**0.604 J**	**0.695 J**	**0.747 J**
Cobalt	3.4	--	1.1	5 U	0.786 J	5 U	5 U	0.982 J	**8.65 J**	**6.34 J**	**6.15 J**	5 U	5 U	5 U
Copper	2.76	1,000	150	1.57 J	5 U	5 U	5 U	5 U	1.8 J	5 U	5 U	5 U	5 U	5 U
Iron	5,999	300	2,600	777	1,360	**12,600 J**	1,340	445	163	**5,550 J**	**5,500 J**	396	1,350	178
Lead	2.8	15	15	10 U	1.31 J	4.07 J	10 U	10 U	10 U	1.28 J	1.44 J	10 U	10 U	10 U
Magnesium	6,363	--	--	2,000	1,420	1,780	844	800	2,250	2,490	2,450	4,900	1,790	1,870
Manganese	214	50	88	26.3 J	20 U	31.9 J	20 U	20 U	42.5	**223**	**220**	**109**	20 U	20 U
Nickel	7.97	100	73	5 U	5 U	5 U	5 U	5 U	22.2	7.97 J	7.93 J	5 U	5 U	5 U
Potassium	3,277	--	--	887 J	538 J	926 J	333 J	254 J	1,860	1,600	1,560	11,200	762 J	1,240
Sodium	22,508	--	--	12,000	12,100	10,800	8,520	11,600	11,400	17,700	17,200	21,300	17,000	20,200
Vanadium	4.72	--	18	1.34 J	5 U	8.17 J	0.831 J	5 U	5 U	5 U	5 U	1.4 J	2.64 J	1.93 J
Zinc	42.1	1,000	1,100	7.71 J	8.47 J	25.9	8.13 J	7.34 R	20.2 J	23.6 J	23.5 J	5 U	5 U	5 U
Dissolved Metals (µg/l)														
Aluminum, Dissolved	1,886	--	3,700	NA	NA	NA	NA	NA	49.5 J	42.7 J	100 U	NA	NA	100 U
Arsenic, Dissolved	5.77	10	0.045	NA	NA	NA	NA	NA	**4.89 J**	20 U	20 U	NA	NA	20 U
Barium, Dissolved	86.2	700	730	NA	NA	NA	NA	NA	36.7	40.2	40.9	NA	NA	10.6
Calcium, Dissolved	69,078	--	--	NA	NA	NA	NA	NA	14,600 J	3,170	3,180	NA	NA	29,300 J
Cobalt, Dissolved	3.4	--	1.1	NA	NA	NA	NA	NA	**8.38 J**	**5.56 J**	**5.69 J**	NA	NA	5 U
Iron, Dissolved	5,999	300	2,600	NA	NA	NA	NA	NA	25 U	1,850	1,870	NA	NA	25 U
Magnesium, Dissolved	6,363	--	--	NA	NA	NA	NA	NA	2,220	2,110	2,170	NA	NA	1,800
Manganese, Dissolved	214	50	88	NA	NA	NA	NA	NA	41.5	**205**	**210**	NA	NA	20 U
Nickel, Dissolved	7.97	100	73	NA	NA	NA	NA	NA	21.4	5.82 J	5.91 J	NA	NA	5 U
Potassium, Dissolved	3,277	--	--	NA	NA	NA	NA	NA	1,840	1,410	1,470	NA	NA	1,320
Sodium, Dissolved	22,508	--	--	NA	NA	NA	NA	NA	11,200	17,700	17,500	NA	NA	19,800
Vanadium, Dissolved	4.72	--	18	NA	NA	NA	NA	NA	5 U	5 U	5 U	NA	NA	1.53 J
Zinc, Dissolved	42.1	1,000	1,100	NA	NA	NA	NA	NA	19.3	22.5	17.7	NA	NA	5 U
Dissolved Wet Chemistry (mg/l)														

Notes:

Shading indicates exceedance of two times the mean base background concentration for Groundwater

Bold box indicates exceedance of NCGWQS or the more conservative MCL

Bold text indicates exceedance of Adjusted Tap Water RSLs

RSLs were adjusted for noncarcinogens to account for exposure to multiple constituents

* - The MCL-Groundwater value is reported in place of the NC2LGW where the MCL value is more conservative.

J - Analyte present, value may or may not be accurate or precise
R - Unreliable Result
U - The material was analyzed for, but not detected
UJ - Analyte not detected, quantitation limit may be inaccurate
mg/l - Milligrams per liter
µg/l - Micrograms per liter

TABLE G-6

Post-Detonation Surface Soil Analytical Results - Detections

Site UXO-02 Expanded SI Report

MCB CamLej, North Carolina

Sample ID	MR02-SS192D-IC-11D	MR02-SS192-IC-11D	MR02-SS192-OC-11D
Sample Date	10/18/11	10/18/11	10/18/11
Chemical Name			
Explosives (UG/KG)			
Perchlorate	5.51	1.09 J	1.07 U
Total Metals (MG/KG)			
Aluminum	1,380 E	1,290 E	1,240 E
Arsenic	0.524 J	0.551 J	0.406 J
Barium	9.87	10	15.1
Beryllium	0.0128 J	0.0136 J	0.0277 J
Calcium	218	193	672
Chromium	0.784 J	0.775	0.794
Cobalt	0.0814 J	0.0959 J	0.126 J
Copper	0.892 J	1.13	0.713
Iron	397 B	408 BE	469 BE
Lead	2.56	2.69	3.85
Magnesium	64.5	60.3	109
Manganese	15.2	15	44.4
Mercury	0.00406 J	0.00251 J	0.0115 J
Nickel	0.484 J	0.432 J	0.482 J
Potassium	54.7 J	57.1 J	71.5
Sodium	8.67 J	10.5 J	10 J
Vanadium	1.18 J	1.16 J	1.53
Zinc	4.2	5.85	3.85

Notes:

B - Analyte not detected above the level reported in blanks

E - Concentration exceeds calibration range of GC/MS instrument (Organic) OR Value is estimated due to matrix interferences (Inorganic)

J - Analyte present. Value may or may not be accurate or precise

Q - One or more quality control criteria failed.

U - The material was analyzed for, but not detected

Shading indicates detection

TABLE G-7

Post-Detonation Surface Soil Analytical Results - All

Site UXO-02 Expanded SI Report

MCIEAST-MCB CAMLEJ, North Carolina

Sample ID	MR02-SS192D-IC-11D	MR02-SS192-IC-11D	MR02-SS192-OC-11D
Sample Date	10/18/11	10/18/11	10/18/11
Chemical Name			
Explosives (UG/KG)			
1,3,5-Trinitrobenzene	300 U	300 U	300 U
1,3-Dinitrobenzene	300 U	300 U	300 U
2,4,6-Trinitrotoluene	300 U	300 U	300 U
2,4-Dinitrotoluene	300 U	300 U	300 U
2,6-Dinitrotoluene	300 U	300 U	300 U
2-Amino-4,6-dinitrotoluene	300 U	300 U	300 U
2-Nitrotoluene	300 U	300 U	300 U
3-Nitrotoluene	300 U	300 U	300 U
4-Amino-2,6-dinitrotoluene	300 U	300 U	300 U
4-Nitrotoluene	300 U	300 U	300 U
HMX	300 U	300 U	300 U
Nitrobenzene	300 U	300 U	300 U
Nitroglycerin	1000 U	1000 U	1000 U
Perchlorate	5.51	1.09 J	1.07 U
PETN	500 U	500 U	500 U
RDX	300 U	300 U	300 U
Tetryl	300 QU	300 QU	300 JQU
Total Metals (MG/KG)			
Aluminum	1,380 E	1,290 E	1,240 E
Antimony	1.97 U	1.46 U	1.37 U
Arsenic	0.524 J	0.551 J	0.406 J
Barium	9.87	10	15.1
Beryllium	0.0128 J	0.0136 J	0.0277 J
Cadmium	0.0986 U	0.0731 U	0.0684 U
Calcium	218	193	672
Chromium	0.784 J	0.775	0.794
Cobalt	0.0814 J	0.0959 J	0.126 J
Copper	0.892 J	1.13	0.713
Iron	397 B	408 BE	469 BE
Lead	2.56	2.69	3.85
Magnesium	64.5	60.3	109
Manganese	15.2	15	44.4
Mercury	0.00406 J	0.00251 J	0.0115 J
Nickel	0.484 J	0.432 J	0.482 J
Potassium	54.7 J	57.1 J	71.5
Selenium	1.97 U	1.46 U	1.37 U
Silver	0.493 U	0.365 U	0.342 U
Sodium	8.67 J	10.5 J	10 J
Thallium	0.986 U	0.731 U	0.684 U
Vanadium	1.18 J	1.16 J	1.53
Zinc	4.2	5.85	3.85

Notes:

B - Analyte not detected above the level reported in blanks
E - Concentration exceeds calibration range of GC/MS instrument (Organic) OR Value is estimated due to matrix interferences (Inorganic)
J - Analyte present. Value may or may not be accurate or precise
Q - One or more quality control criteria failed.
U - The material was analyzed for, but not detected

Appendix H
MEC Intrusive Investigation Documents

TABLE H-1

MEC Intrusive Investigation Results

Site UXO-02

MCIEAST-MCB CAMLEJ, North Carolina

Anomaly Identification	Grid	Amplitude (millivolts)	Dig Date	Easting (UTM)	Northing (UTM)	Item Group	Item Class	Category	Filler	Fuze	Quantity	Depth (inch)	Weight (pound)	Action Taken	Demolition Required?	Item Comment
UXO2_01_T10-1-00001	UXO2_01_T10-1	48.7	10/11/2011	276983.10	3829334.10	QC	QC Seed	QC Seed	N/A	N/A	1	6	0.25	Consolidation Point	None	QC Seed #15
UXO2_01_T10-1-00002	UXO2_01_T10-1	3.6	10/11/2011	276941.70	3829391.30	No Contact	No Contact	N/A	N/A	N/A	0	0	0	Left in Place	None	
UXO2_01_T10-1-00003	UXO2_01_T10-1	3.2	10/11/2011	276921.30	3829411.60	No Contact	No Contact	N/A	N/A	N/A	0	0	0	Left in Place	None	
UXO2_01_T10-1-00004	UXO2_01_T10-1	11.4	10/11/2011	276883.60	3829465.40	Cultural Debris	Scrap	N/A	N/A	N/A	1	6	0.1	Scrap Bin	None	Survey nail
UXO2_01_T10-1-00005	UXO2_01_T10-1	7.0	9/30/2011	276874.30	3829479.00	Cultural Debris	Scrap	N/A	N/A	N/A	2	3	0.1	Scrap Bin	None	Nail
UXO2_01_T10-1-00006	UXO2_01_T10-1	11.2	10/11/2011	276825.50	3829541.50	Cultural Debris	Scrap	N/A	N/A	N/A	1	8	0.2	Scrap Bin	None	Wire
UXO2_01_T10-2-00001	UXO2_01_T10-2	3.5	10/11/2011	277016.30	3829304.30	No Contact	No Contact	N/A	N/A	N/A	0	0	0	Left in Place	None	
UXO2_01_T10-2-00002	UXO2_01_T10-2	3.0	10/11/2011	276995.80	3829321.60	No Contact	No Contact	N/A	N/A	N/A	0	0	0	Left in Place	None	
UXO2_01_T10-2-00003	UXO2_01_T10-2	9.6	10/11/2011	276984.00	3829335.20	Cultural Debris	Scrap	N/A	N/A	N/A	1	4	0.1	Scrap Bin	None	Wire
UXO2_01_T10-2-00004	UXO2_01_T10-2	3.5	10/11/2011	276942.60	3829392.40	No Contact	No Contact	N/A	N/A	N/A	0	0	0	Left in Place	None	
UXO2_01_T10-2-00005	UXO2_01_T10-2	3.2	10/11/2011	276941.50	3829393.50	No Contact	No Contact	N/A	N/A	N/A	0	0	0	Left in Place	None	
UXO2_01_T10-2-00006	UXO2_01_T10-2	3.0	10/11/2011	276940.10	3829394.70	No Contact	No Contact	N/A	N/A	N/A	0	0	0	Left in Place	None	
UXO2_01_T10-2-00007	UXO2_01_T10-2	3.1	10/11/2011	276930.50	3829403.00	No Contact	No Contact	N/A	N/A	N/A	0	0	0	Left in Place	None	
UXO2_01_T10-2-00008	UXO2_01_T10-2	93.9	10/11/2011	276906.90	3829432.90	Cultural Debris	Scrap	N/A	N/A	N/A	1	1	0.5	Scrap Bin	None	
UXO2_01_T10-2-00009	UXO2_01_T10-2	3.4	10/11/2011	276903.50	3829441.30	MPPEH	Small Arms	Expended Cartridge Cases (7.62mm Blank)	Empty	N/A	2	4	0.2	Consolidation Point	Demil	Determined to be MDAS
UXO2_01_T10-2-00010	UXO2_01_T10-2	3.7	10/11/2011	276895.00	3829452.80	MPPEH	Small Arms	Expended Cartridge Cases (7.62mm Blank)	Empty	N/A	7	2	0.7	Consolidation Point	Demil	Determined to be MDAS
UXO2_01_T10-2-00011	UXO2_01_T10-2	3.2	10/11/2011	276884.80	3829465.70	No Contact	No Contact	N/A	N/A	N/A	0	0	0	Left in Place	None	
UXO2_01_T10-2-00012	UXO2_01_T10-2	4.1	10/11/2011	276882.80	3829468.60	MPPEH	Small Arms	Expended Cartridge Cases (7.62mm Blank)	Empty	N/A	1	3	0.1	Consolidation Point	Demil	Determined to be MDAS
UXO2_01_T10-2-00013	UXO2_01_T10-2	5.0	10/11/2011	276879.80	3829473.10	Cultural Debris	Scrap	N/A	N/A	N/A	1	3	0.1	Scrap Bin	None	
UXO2_01_T10-2-00014	UXO2_01_T10-2	3.5	10/11/2011	276872.10	3829484.40	No Contact	No Contact	N/A	N/A	N/A	0	0	0	Left in Place	None	
UXO2_01_T10-2-00015	UXO2_01_T10-2	3.6	10/11/2011	276865.70	3829494.50	No Contact	No Contact	N/A	N/A	N/A	0	0	0	Left in Place	None	
UXO2_01_T10-2-00016	UXO2_01_T10-2	3.3	10/11/2011	276865.20	3829495.30	No Contact	No Contact	N/A	N/A	N/A	0	0	0	Left in Place	None	
UXO2_01_T10-2-00017	UXO2_01_T10-2	3.5	10/11/2011	276862.80	3829499.20	No Contact	No Contact	N/A	N/A	N/A	0	0	0	Left in Place	None	
UXO2_01_T10-2-00018	UXO2_01_T10-2	5.8	10/11/2011	276858.60	3829504.40	Cultural Debris	Scrap	N/A	N/A	N/A	1	6	0.1	Scrap Bin	None	
UXO2_01_T10-2-00019	UXO2_01_T10-2	3.5	10/11/2011	276857.40	3829505.70	No Contact	No Contact	N/A	N/A	N/A	0	0	0	Left in Place	None	
UXO2_01_T10-2-00020	UXO2_01_T10-2	3.7	10/11/2011	276836.40	3829529.60	No Contact	No Contact	N/A	N/A	N/A	0	0	0	Left in Place	None	
UXO2_01_T11-2-00001	UXO2_01_T11-2	3.4	10/12/2011	277015.90	3829319.50	Cultural Debris	Scrap	N/A	N/A	N/A	1	2	0.25	Scrap Bin	None	
UXO2_01_T11-2-00002	UXO2_01_T11-2	7.0	10/12/2011	277015.00	3829320.60	Cultural Debris	Scrap	N/A	N/A	N/A	1	4	0.2	Scrap Bin	None	
UXO2_01_T11A-1-00001	UXO2_01_T11A-1	3.1	10/12/2011	276935.30	3829408.10	No Contact	No Contact	N/A	N/A	N/A	0	0	0	Left in Place	None	
UXO2_01_T11A-1-00002	UXO2_01_T11A-1	3.2	10/12/2011	276906.40	3829456.60	No Contact	No Contact	N/A	N/A	N/A	0	0	0	Left in Place	None	
UXO2_01_T11A-1-00003	UXO2_01_T11A-1	39.9	10/12/2011	276905.80	3829458.50	QC	QC Seed	QC Seed	N/A	N/A	1	6	0.25	Consolidation Point	None	QC Seed #17
UXO2_01_T11A-1-00004	UXO2_01_T11A-1	14.9	10/12/2011	276883.80	3829482.20	Cultural Debris	Scrap	N/A	N/A	N/A	1	6	0.25	Scrap Bin	None	Cable
UXO2_01_T11A-1-00005	UXO2_01_T11A-1	106.1	10/13/2011	276881.20	3829484.10	MPPEH	Small Arms	Expended Cartridge Cases (7.62mm Blank)	Empty	N/A	1	24	0.5	Consolidation Point	Demil	Determined to be MDAS
UXO2_01_T11A-1-00006	UXO2_01_T11A-1	11.6	10/13/2011	276864.90	3829507.20	TBD	TBD	Greater than 2 ft	N/A	N/A	0	0	0	Left in Place	None	
UXO2_01_T11A-1-00007	UXO2_01_T11A-1	3.4	10/12/2011	276830.50	3829556.60	No Contact	No Contact	N/A	N/A	N/A	0	0	0	Left in Place	None	
UXO2_01_T11A-2-00001	UXO2_01_T11A-2	4.1	10/12/2011	276949.30	3829391.40	Cultural Debris	Scrap	N/A	N/A	N/A	1	4	0.1	Scrap Bin	None	
UXO2_01_T11A-2-00002	UXO2_01_T11A-2	4.1	10/12/2011	276937.80	3829407.30	Cultural Debris	Scrap	N/A	N/A	N/A	1	3	0.1	Scrap Bin	None	
UXO2_01_T11A-2-00003	UXO2_01_T11A-2	3.3	10/12/2011	276936.70	3829408.80	No Contact	No Contact	N/A	N/A	N/A	0	0	0	Left in Place	None	
UXO2_01_T11A-2-00004	UXO2_01_T11A-2	3.5	10/12/2011	276935.80	3829410.10	No Contact	No Contact	N/A	N/A	N/A	0	0	0	Left in Place	None	
UXO2_01_T11A-2-00005	UXO2_01_T11A-2	4.4	10/12/2011	276934.20	3829412.30	Cultural Debris	Scrap	N/A	N/A	N/A	1	6	0.2	Scrap Bin	None	
UXO2_01_T11A-2-00006	UXO2_01_T11A-2	4.7	10/12/2011	276912.20	3829441.50	Cultural Debris	Scrap	N/A	N/A	N/A	1	8	0.1	Scrap Bin	None	
UXO2_01_T11A-2-00007	UXO2_01_T11A-2	6.0	10/12/2011	276911.70	3829443.10	Cultural Debris	Scrap	N/A	N/A	N/A	1	3	0.2	Scrap Bin	None	
UXO2_01_T11A-2-00008	UXO2_01_T11A-2	3.2	10/13/2011	276908.50	3829453.60	MPPEH	Small Arms	Expended Cartridge Cases (7.62mm Blank)	Empty	N/A	8	4	0.8	Consolidation Point	Demil	Determined to be MDAS
UXO2_01_T11A-2-00009	UXO2_01_T11A-2	3.0	10/12/2011	276907.20	3829457.90	No Contact	No Contact	N/A	N/A	N/A	0	0	0	Left in Place	None	
UXO2_01_T11A-2-00010	UXO2_01_T11A-2	3.8	10/12/2011	276902.70	3829462.60	No Contact	No Contact	N/A	N/A	N/A	0	0	0	Left in Place	None	
UXO2_01_T11A-2-00011	UXO2_01_T11A-2	8.4	10/12/2011	276901.20	3829463.50	Cultural Debris	Scrap	N/A	N/A	N/A	1	4	0.1	Scrap Bin	None	
UXO2_01_T11A-2-00012	UXO2_01_T11A-2	68.9	10/13/2011	276881.40	3829485.60	Cultural Debris	Scrap	N/A	N/A	N/A	3	18	6	Scrap Bin	None	Nails and wire
UXO2_01_T11A-2-00013	UXO2_01_T11A-2	5.1	10/12/2011	276875.40	3829493.10	Cultural Debris	Scrap	N/A	N/A	N/A	1	2	0.1	Scrap Bin	None	
UXO2_01_T11A-2-00014	UXO2_01_T11A-2	5.8	10/13/2011	276874.20	3829495.10	TBD	TBD	Other (see comments)	N/A	N/A	0	0	0	Left in Place	None	Blocked by dead fall
UXO2_01_T11A-2-00015	UXO2_01_T11A-2	3.4	10/13/2011	276873.70	3829496.10	TBD	TBD	Other (see comments)	N/A	N/A	0	0	0	Left in Place	None	Blocked by dead fall
UXO2_01_T11A-2-00016	UXO2_01_T11A-2	5.7	10/13/2011	276866.00	3829507.80	Cultural Debris	Scrap	N/A	N/A	N/A	1	3	0.2	Scrap Bin	None	
UXO2_01_T11A-2-00017	UXO2_01_T11A-2	4.1	10/12/2011	276864.60	3829509.80	Cultural Debris	Scrap	N/A	N/A	N/A	1	6	0.1	Scrap Bin	None	
UXO2_01_T11A-2-00018	UXO2_01_T11A-2	3.8	10/12/2011	276863.70	3829511.10	No Contact	No Contact	N/A	N/A	N/A	0	0	0	Left in Place	None	
UXO2_01_T11A-2-00019	UXO2_01_T11A-2	4.4	10/12/2011	276859.30	3829517.60	Cultural Debris	Scrap	N/A	N/A	N/A	1	8	0.1	Scrap Bin	None	
UXO2_01_T11A-2-00020	UXO2_01_T11A-2	3.1	10/12/2011	276848.10	3829527.80	No Contact	No Contact	N/A	N/A	N/A	0	0	0	Left in Place	None	
UXO2_01_T11A-2-00021	UXO2_01_T11A-2	3.0	10/12/2011	276831.90	3829556.40	No Contact	No Contact	N/A	N/A	N/A	0	0	0	Left in Place	None	
UXO2_01_T1-2-00001	UXO2_01_T1-2	3.7	10/11/2011	276902.50	3829290.30	No Contact	No Contact	N/A	N/A	N/A	0	0	0	Left in Place	None	
UXO2_01_T12-2-00001	UXO2_01_T12-2	3.2	10/12/2011	277025.30	3829320.40	No Contact	No Contact	N/A	N/A	N/A	0	0	0	Left in Place	None	
UXO2_01_T12A-1-00001	UXO2_01_T12A-1	37.6	10/12/2011	276906.30	3829468.20	Cultural Debris	Scrap	N/A	N/A	N/A	2	5	0.5	Scrap Bin	None	Bolt
UXO2_01_T12A-1-00002	UXO2_01_T12A-1	4.0	10/12/2011	276900.40	3829473.50	MPPEH	Small Arms	Expended Cartridge Cases (7.62mm Blank)	Empty	N/A	3	3	0.3	Consolidation Point	Demil	Determined to be MDAS
UXO2_01_T12A-1-00003	UXO2_01_T12A-1	5.1	10/12/2011	276898.40	3829484.20	Cultural Debris	Scrap	N/A	N/A	N/A	1	4	0.1	Scrap Bin	None	
UXO2_01_T12A-2-00001	UXO2_01_T12A-2	3.3	10/12/2011	276914.90	3829462.20	No Contact	No Contact	N/A	N/A	N/A	0	0	0	Left in Place	None	
UXO2_01_T12A-2-00002	UXO2_01_T12A-2	4.1	10/12/2011	276908.20	3829468.50	Cultural Debris	Scrap	N/A	N/A	N/A	1	6	0.1	Scrap Bin	None	
UXO2_01_T12A-2-00003	UXO2_01_T12A-2	4.9	10/12/2011	276900.30	3829478.90	Cultural Debris	Scrap	N/A	N/A	N/A	1	3	0.1	Scrap Bin	None	
UXO2_01_T12A-2-00004	UXO2_01_T12A-2	5.0	10/12/2011	276900.40	3829481.90	Cultural Debris	Scrap	N/A	N/A	N/A	1	3	0.1	Scrap Bin	None	
UXO2_01_T12A-2-00005	UXO2_01_T12A-2	7.5	10/12/2011	276880.90	3829505.00	Cultural Debris	Scrap	N/A	N/A	N/A	1	1	0.1	Scrap Bin	None	
UXO2_01_T12A-2-00006	UXO2_01_T12A-2	3.6	10/12/2011	276875.90	3829511.80	No Contact	No Contact	N/A	N/A	N/A	0	0	0	Left in Place	None	
UXO2_01_T12A-2-00007	UXO2_01_T12A-2	5.3	10/12/2011	276871.10	3829517.00	Cultural Debris	Scrap	N/A	N/A	N/A	1	2	0.1	Scrap Bin	None	
UXO2_01_T12A-2-00008	UXO2_01_T12A-2	3.3	10/12/2011	276868.10	3829520.40	No Contact	No Contact	N/A	N/A	N/A	0	0	0	Left in Place	None	
UXO2_01_T12A-2-00009	UXO2_01_T12A-2	4.3	10/12/2011	276865.80	3829522.80	Cultural Debris	Scrap	N/A	N/A	N/A	1	4	0.1	Scrap Bin	None	
UXO2_01_T12A-2-00010	UXO2_01_T12A-2	3.8	10/12/2011	276859.50	3829531.30	No Contact	No Contact	N/A	N/A	N/A	0	0	0	Left in Place	None	
UXO2_01_T12A-2-00011	UXO2_01_T12A-2	3.6	10/12/2011	276859.10	3829531.90	No Contact	No Contact	N/A	N/A	N/A	0	0	0	Left in Place	None	
UXO2_01_T12A-2-00012	UXO2_01_T12A-2	3.6	10/12/2011	276857.70	3829533.90	No Contact	No Contact	N/A	N/A	N/A	0	0	0	Left in Place	None	
UXO2_01_T12A-2-00013	UXO2_01_T12A-2	3.9	10/12/2011	276857.00	3829534.90	Cultural Debris	Scrap	N/A	N/A	N/A	1	8	0.1	Scrap Bin	None	
UXO2_01_T12A-2-00014	UXO2_01_T12A-2	7.6	10/12/2011	276856.10	3829536.20	Cultural Debris	Scrap	N/A	N/A	N/A	1	6	0.2	Scrap Bin	None	
UXO2_01_T12A-2-00015	UXO2_01_T12A-2	5.9	10/12/2011	276855.20	3829537.50	Cultural Debris	Scrap	N/A	N/A	N/A	1	10	0.1	Scrap Bin	None	
UXO2_01_T12A-2-00016	UXO2_01_T12A-2	3.9	10/12/2011	276852.00	3829542.30	Cultural Debris	Scrap	N/A	N/A	N/A	1	6	0.1	Scrap Bin	None	
UXO2_01_T13-1-00001	UXO2_01_T13-1	3.0	10/12/2011	277020.80	3829337.50	No Contact	No Contact	N/A	N/A	N/A	0	0	0	Left in Place	None	
UXO2_01_T13-1-00002	UXO2_01_T13-1	3.5	10/12/2011	277019.80	3829338.90	No Contact	No Contact	N/A	N/A	N/A	0	0	0	Left in Place	None	

TABLE H-1

MEC Intrusive Investigation Results

Site UXO-02

MCIEAST-MCB CAMLEJ, North Carolina

Anomaly Identification	Grid	Amplitude (millivolts)	Dig Date	Easting (UTM)	Northing (UTM)	Item Group	Item Class	Category	Filler	Fuze	Quantity	Depth (inch)	Weight (pound)	Action Taken	Demolition Required?	Item Comment
UXO2_01_T13-2-00001	UXO2_01_T13-2	3.3	10/12/2011	277032.70	3829324.50	No Contact	No Contact	N/A	N/A	N/A	0	0	0	Left in Place	None	
UXO2_01_T13A-1-00001	UXO2_01_T13A-1	5.4	10/12/2011	276916.30	3829469.90	Cultural Debris	Scrap	N/A	N/A	N/A	1	8	0.1	Scrap Bin	None	
UXO2_01_T13A-1-00002	UXO2_01_T13A-1	5.5	10/12/2011	276915.30	3829471.50	Cultural Debris	Scrap	N/A	N/A	N/A	1	10	0.1	Scrap Bin	None	
UXO2_01_T13A-1-00003	UXO2_01_T13A-1	5.5	10/12/2011	276914.50	3829472.70	Cultural Debris	Scrap	N/A	N/A	N/A	1	8	0.1	Scrap Bin	None	
UXO2_01_T13A-1-00004	UXO2_01_T13A-1	8.3	10/12/2011	276913.90	3829473.50	Cultural Debris	Scrap	N/A	N/A	N/A	1	5	0.2	Scrap Bin	None	
UXO2_01_T13A-1-00005	UXO2_01_T13A-1	76.2	10/13/2011	276912.00	3829476.20	MPPEH	Small Arms	Expended Cartridge Cases (7.62mm Blank)	Empty	N/A	50	24	25	Consolidation Point	Demil	Determined to be MDAS
UXO2_01_T13A-1-00006	UXO2_01_T13A-1	13.4	10/13/2011	276910.80	3829478.00	TBD	TBD	Other (see comments)	N/A	N/A	15	24	2	Left in Place	None	Influence from trash pit outside transect
UXO2_01_T13A-1-00007	UXO2_01_T13A-1	49.9	10/13/2011	276908.70	3829480.90	MPPEH	Small Arms	Expended Cartridge Cases (7.62mm Blank)	Empty	N/A	50	24	25	Consolidation Point	Demil	Determined to be MDAS
UXO2_01_T13A-1-00008	UXO2_01_T13A-1	62.0	10/13/2011	276908.20	3829481.60	MPPEH	Small Arms	Expended Cartridge Cases (7.62mm Blank)	Empty	N/A	50	24	25	Consolidation Point	Demil	Determined to be MDAS
UXO2_01_T13A-1-00009	UXO2_01_T13A-1	9.7	10/12/2011	276897.80	3829498.30	Cultural Debris	Scrap	N/A	N/A	N/A	1	1	0.2	Scrap Bin	None	
UXO2_01_T13A-1-00010	UXO2_01_T13A-1	3.1	10/12/2011	276866.70	3829537.90	No Contact	No Contact	N/A	N/A	N/A	0	0	0	Left in Place	None	
UXO2_01_T13A-1-00011	UXO2_01_T13A-1	49.4	10/12/2011	276858.10	3829549.70	QC	QC Seed	QC Seed	N/A	N/A	1	6	0.25	Consolidation Point	None	QC Seed #18
UXO2_01_T13A-1-00012	UXO2_01_T13A-1	3.4	10/12/2011	276837.50	3829569.20	No Contact	No Contact	N/A	N/A	N/A	0	0	0	Left in Place	None	
UXO2_01_T13A-2-00001	UXO2_01_T13A-2	3.8	10/12/2011	276925.60	3829456.40	Cultural Debris	Scrap	N/A	N/A	N/A	1	8	0.2	Scrap Bin	None	
UXO2_01_T13A-2-00002	UXO2_01_T13A-2	3.0	10/12/2011	276923.70	3829459.60	No Contact	No Contact	N/A	N/A	N/A	0	0	0	Left in Place	None	
UXO2_01_T13A-2-00003	UXO2_01_T13A-2	5.2	10/12/2011	276921.30	3829463.80	Cultural Debris	Scrap	N/A	N/A	N/A	1	10	0.1	Scrap Bin	None	
UXO2_01_T13A-2-00004	UXO2_01_T13A-2	3.2	10/12/2011	276917.40	3829470.50	No Contact	No Contact	N/A	N/A	N/A	0	0	0	Left in Place	None	
UXO2_01_T13A-2-00005	UXO2_01_T13A-2	21.4	10/13/2011	276915.90	3829472.90	Cultural Debris	Scrap	N/A	N/A	N/A	9	18	6	Scrap Bin	None	Wire
UXO2_01_T13A-2-00006	UXO2_01_T13A-2	138.8	10/13/2011	276912.90	3829477.00	MPPEH	Small Arms	Expended Cartridge Cases (7.62mm Blank)	Empty	N/A	30	24	40	Consolidation Point	Demil	Determined to be MDAS
UXO2_01_T13A-2-00007	UXO2_01_T13A-2	32.7	10/13/2011	276909.20	3829482.20	MPPEH	Small Arms	Expended Cartridge Cases (7.62mm Blank)	Empty	N/A	12	24	10	Consolidation Point	Demil	Determined to be MDAS
UXO2_01_T13A-2-00008	UXO2_01_T13A-2	34.3	10/13/2011	276908.50	3829483.20	MPPEH	Small Arms	Expended Cartridge Cases (7.62mm Blank)	Empty	N/A	14	24	15	Consolidation Point	Demil	Determined to be MDAS
UXO2_01_T13A-2-00009	UXO2_01_T13A-2	4.0	10/12/2011	276900.20	3829496.30	No Contact	No Contact	N/A	N/A	N/A	0	0	0	Left in Place	None	
UXO2_01_T13A-2-00010	UXO2_01_T13A-2	5.5	10/12/2011	276899.00	3829498.30	Cultural Debris	Scrap	N/A	N/A	N/A	1	4	0.1	Scrap Bin	None	
UXO2_01_T13A-2-00011	UXO2_01_T13A-2	3.0	10/12/2011	276871.60	3829533.50	No Contact	No Contact	N/A	N/A	N/A	0	0	0	Left in Place	None	
UXO2_01_T13A-2-00012	UXO2_01_T13A-2	3.4	10/12/2011	276869.90	3829535.80	No Contact	No Contact	N/A	N/A	N/A	0	0	0	Left in Place	None	
UXO2_01_T13A-2-00013	UXO2_01_T13A-2	3.6	10/12/2011	276864.90	3829542.80	No Contact	No Contact	N/A	N/A	N/A	0	0	0	Left in Place	None	
UXO2_01_T13A-2-00014	UXO2_01_T13A-2	3.2	10/12/2011	276853.40	3829556.30	No Contact	No Contact	N/A	N/A	N/A	0	0	0	Left in Place	None	
UXO2_01_T13A-2-00015	UXO2_01_T13A-2	4.9	10/12/2011	276852.40	3829557.30	Cultural Debris	Scrap	N/A	N/A	N/A	1	8	0.1	Scrap Bin	None	
UXO2_01_T13A-2-00016	UXO2_01_T13A-2	5.4	10/12/2011	276851.00	3829558.60	Cultural Debris	Scrap	N/A	N/A	N/A	1	3	0.1	Scrap Bin	None	
UXO2_01_T13A-2-00017	UXO2_01_T13A-2	26.4	10/12/2011	276837.90	3829570.30	Cultural Debris	Scrap	N/A	N/A	N/A	1	2	0.25	Scrap Bin	None	Alum tube
UXO2_01_T14-1-00001	UXO2_01_T14-1	3.1	10/12/2011	277032.50	3829333.50	No Contact	No Contact	N/A	N/A	N/A	0	0	0	Left in Place	None	
UXO2_01_T14-2-00001	UXO2_01_T14-2	4.8	10/12/2011	277033.60	3829334.00	Cultural Debris	Scrap	N/A	N/A	N/A	1	6	0.1	Scrap Bin	None	
UXO2_01_T14A-1-00001	UXO2_01_T14A-1	5.6	10/13/2011	276927.30	3829471.10	Cultural Debris	Scrap	N/A	N/A	N/A	1	10	0.1	Scrap Bin	None	
UXO2_01_T14A-1-00002	UXO2_01_T14A-1	7.7	10/13/2011	276925.40	3829473.30	Cultural Debris	Scrap	N/A	N/A	N/A	1	8	0.1	Scrap Bin	None	
UXO2_01_T14A-1-00003	UXO2_01_T14A-1	9.2	10/13/2011	276924.10	3829474.90	Cultural Debris	Scrap	N/A	N/A	N/A	1	2	0.2	Scrap Bin	None	
UXO2_01_T14A-1-00004	UXO2_01_T14A-1	8.9	10/13/2011	276923.10	3829476.00	Cultural Debris	Scrap	N/A	N/A	N/A	1	4	0.2	Scrap Bin	None	Cable
UXO2_01_T14A-1-00005	UXO2_01_T14A-1	5.8	10/13/2011	276922.40	3829476.90	Cultural Debris	Scrap	N/A	N/A	N/A	1	8	0.1	Scrap Bin	None	
UXO2_01_T14A-1-00006	UXO2_01_T14A-1	4.4	10/13/2011	276921.80	3829477.70	Cultural Debris	Scrap	N/A	N/A	N/A	1	10	0.1	Scrap Bin	None	
UXO2_01_T14A-1-00007	UXO2_01_T14A-1	31.8	10/13/2011	276921.20	3829480.50	Cultural Debris	Scrap	N/A	N/A	N/A	2	2	0.2	Scrap Bin	None	
UXO2_01_T14A-1-00008	UXO2_01_T14A-1	4.9	10/13/2011	276919.50	3829488.10	Cultural Debris	Scrap	N/A	N/A	N/A	1	6	0.1	Scrap Bin	None	
UXO2_01_T14A-1-00009	UXO2_01_T14A-1	7.4	10/13/2011	276915.20	3829494.80	Cultural Debris	Scrap	N/A	N/A	N/A	1	8	0.2	Scrap Bin	None	
UXO2_01_T14A-1-00010	UXO2_01_T14A-1	3.4	10/13/2011	276912.10	3829498.60	Cultural Debris	Scrap	N/A	N/A	N/A	4	7	0.1	Scrap Bin	None	
UXO2_01_T14A-1-00011	UXO2_01_T14A-1	3.7	10/13/2011	276911.40	3829499.30	No Contact	No Contact	N/A	N/A	N/A	0	0	0	Left in Place	None	
UXO2_01_T14A-1-00012	UXO2_01_T14A-1	136.4	10/13/2011	276876.00	3829541.50	Cultural Debris	Scrap	N/A	N/A	N/A	1	2	4	Scrap Bin	None	
UXO2_01_T14A-1-00013	UXO2_01_T14A-1	6.4	10/12/2011	276874.10	3829543.70	Cultural Debris	Scrap	N/A	N/A	N/A	1	3	0.2	Scrap Bin	None	
UXO2_01_T14A-1-00014	UXO2_01_T14A-1	3.4	10/12/2011	276848.80	3829578.90	No Contact	No Contact	N/A	N/A	N/A	0	0	0	Left in Place	None	
UXO2_01_T14A-2-00001	UXO2_01_T14A-2	4.1	10/13/2011	276934.90	3829459.90	Cultural Debris	Scrap	N/A	N/A	N/A	1	6	0.1	Scrap Bin	None	
UXO2_01_T14A-2-00002	UXO2_01_T14A-2	3.4	10/13/2011	276931.50	3829467.60	No Contact	No Contact	N/A	N/A	N/A	0	0	0	Left in Place	None	
UXO2_01_T14A-2-00003	UXO2_01_T14A-2	40.3	10/13/2011	276928.80	3829471.60	Cultural Debris	Scrap	N/A	N/A	N/A	1	2	0.5	Scrap Bin	None	
UXO2_01_T14A-2-00004	UXO2_01_T14A-2	9.3	10/13/2011	276927.90	3829472.70	Cultural Debris	Scrap	N/A	N/A	N/A	1	6	0.1	Scrap Bin	None	
UXO2_01_T14A-2-00005	UXO2_01_T14A-2	3.0	10/13/2011	276926.50	3829474.30	No Contact	No Contact	N/A	N/A	N/A	0	0	0	Left in Place	None	
UXO2_01_T14A-2-00006	UXO2_01_T14A-2	4.4	10/13/2011	276924.40	3829476.70	Cultural Debris	Scrap	N/A	N/A	N/A	1	2	0.1	Scrap Bin	None	
UXO2_01_T14A-2-00007	UXO2_01_T14A-2	3.4	10/13/2011	276922.30	3829480.60	No Contact	No Contact	N/A	N/A	N/A	0	0	0	Left in Place	None	
UXO2_01_T14A-2-00008	UXO2_01_T14A-2	22.3	10/13/2011	276921.10	3829486.00	Cultural Debris	Scrap	N/A	N/A	N/A	1	1	0.6	Scrap Bin	None	Survey nail
UXO2_01_T14A-2-00009	UXO2_01_T14A-2	8.4	10/13/2011	276920.80	3829487.50	Cultural Debris	Scrap	N/A	N/A	N/A	1	4	0.2	Scrap Bin	None	
UXO2_01_T14A-2-00010	UXO2_01_T14A-2	5.3	10/13/2011	276918.00	3829493.20	Cultural Debris	Scrap	N/A	N/A	N/A	1	3	0.1	Scrap Bin	None	
UXO2_01_T14A-2-00011	UXO2_01_T14A-2	5.2	10/13/2011	276917.50	3829493.90	Cultural Debris	Scrap	N/A	N/A	N/A	1	8	0.1	Scrap Bin	None	
UXO2_01_T14A-2-00012	UXO2_01_T14A-2	3.3	10/13/2011	276916.50	3829495.10	No Contact	No Contact	N/A	N/A	N/A	0	0	0	Left in Place	None	
UXO2_01_T14A-2-00013	UXO2_01_T14A-2	6.5	10/12/2011	276911.10	3829501.60	Cultural Debris	Scrap	N/A	N/A	N/A	1	8	0.2	Scrap Bin	None	
UXO2_01_T14A-2-00014	UXO2_01_T14A-2	3.5	10/12/2011	276871.90	3829547.40	No Contact	No Contact	N/A	N/A	N/A	0	0	0	Left in Place	None	
UXO2_01_T14A-2-00015	UXO2_01_T14A-2	7.9	10/12/2011	276866.50	3829555.20	Cultural Debris	Scrap	N/A	N/A	N/A	1	6	0.1	Scrap Bin	None	
UXO2_01_T14A-2-00016	UXO2_01_T14A-2	3.3	10/12/2011	276859.70	3829565.70	No Contact	No Contact	N/A	N/A	N/A	0	0	0	Left in Place	None	
UXO2_01_T14A-2-00017	UXO2_01_T14A-2	3.1	10/12/2011	276855.20	3829572.40	No Contact	No Contact	N/A	N/A	N/A	0	0	0	Left in Place	None	
UXO2_01_T14A-2-00018	UXO2_01_T14A-2	3.2	10/12/2011	276852.90	3829575.40	No Contact	No Contact	N/A	N/A	N/A	0	0	0	Left in Place	None	
UXO2_01_T15-1-00001	UXO2_01_T15-1	3.1	10/12/2011	277037.30	3829354.10	No Contact	No Contact	N/A	N/A	N/A	0	0	0	Left in Place	None	
UXO2_01_T15-1-00002	UXO2_01_T15-1	3.4	10/12/2011	277008.80	3829381.10	No Contact	No Contact	N/A	N/A	N/A	0	0	0	Left in Place	None	
UXO2_01_T15-2-00001	UXO2_01_T15-2	74.0	10/12/2011	277047.50	3829342.20	Cultural Debris	Scrap	N/A	N/A	N/A	1	2	5	Scrap Bin	None	
UXO2_01_T15-2-00002	UXO2_01_T15-2	3.8	10/12/2011	277014.20	3829376.30	No Contact	No Contact	N/A	N/A	N/A	0	0	0	Left in Place	None	
UXO2_01_T15A-1-00001	UXO2_01_T15A-1	4.9	10/13/2011	276928.50	3829486.30	Cultural Debris	Scrap	N/A	N/A	N/A	1	4	0.1	Scrap Bin	None	
UXO2_01_T15A-1-00002	UXO2_01_T15A-1	5.8	10/13/2011	276928.10	3829486.90	Cultural Debris	Scrap	N/A	N/A	N/A	1	6	0.1	Scrap Bin	None	
UXO2_01_T15A-1-00003	UXO2_01_T15A-1	25.5	10/13/2011	276927.00	3829488.50	Cultural Debris	Scrap	N/A	N/A	N/A	1	6	0.3	Scrap Bin	None	
UXO2_01_T15A-1-00004	UXO2_01_T15A-1	41.7	10/13/2011	276910.00	3829512.60	Cultural Debris	Scrap	N/A	N/A	N/A	4	3	0.5	Scrap Bin	None	
UXO2_01_T15A-1-00005	UXO2_01_T15A-1	162.5	10/13/2011	276907.90	3829514.50	Cultural Debris	Scrap	N/A	N/A	N/A	1	0	2	Scrap Bin	None	
UXO2_01_T15A-1-00006	UXO2_01_T15A-1	225.6	10/13/2011	276906.70	3829515.60	Cultural Debris	Scrap	N/A	N/A	N/A	1	1	4	Scrap Bin	None	
UXO2_01_T15A-1-00007	UXO2_01_T15A-1	3.9	10/13/2011	276892.80	3829533.10	No Contact	No Contact	N/A	N/A	N/A	0	0	0	Left in Place	None	
UXO2_01_T15A-1-00008	UXO2_01_T15A-1	138.9	10/12/2011	276859.20	3829579.60	Cultural Debris	Scrap	N/A	N/A	N/A	1	1	10	Scrap Bin	None	
UXO2_01_T15A-2-00001	UXO2_01_T15A-2	8.1	10/13/2011	276928.30	3829488.40	Cultural Debris	Scrap	N/A	N/A	N/A	1	4	0.2	Scrap Bin	None	
UXO2_01_T15A-2-00002	UXO2_01_T15A-2	5.1	10/13/2011	276924.10	3829494.90	Cultural Debris	Scrap	N/A	N/A	N/A	1	6	0.1	Scrap Bin	None	
UXO2_01_T15A-2-00003	UXO2_01_T15A-2	4.3	10/13/2011	276911.50	3829513.00	Cultural Debris	Scrap	N/A	N/A	N/A	1	4	0.1	Scrap Bin	None	

TABLE H-1

MEC Intrusive Investigation Results

Site UXO-02

MCIEAST-MCB CAMLEJ, North Carolina

Anomaly Identification	Grid	Amplitude (millivolts)	Dig Date	Easting (UTM)	Northing (UTM)	Item Group	Item Class	Category	Filler	Fuze	Quantity	Depth (inch)	Weight (pound)	Action Taken	Demolition Required?	Item Comment
UXO2_01_T15A-2-00004	UXO2_01_T15A-2	71.0	10/13/2011	276909.90	3829514.50	Cultural Debris	Scrap	N/A	N/A	N/A	1	6	0.2	Scrap Bin	None	
UXO2_01_T15A-2-00005	UXO2_01_T15A-2	70.8	10/13/2011	276909.10	3829515.30	Cultural Debris	Scrap	N/A	N/A	N/A	1	8	0.2	Scrap Bin	None	
UXO2_01_T15A-2-00006	UXO2_01_T15A-2	239.8	10/13/2011	276908.10	3829516.20	Cultural Debris	Scrap	N/A	N/A	N/A	1	1	4	Scrap Bin	None	
UXO2_01_T15A-2-00007	UXO2_01_T15A-2	8.1	10/13/2011	276904.40	3829519.70	Cultural Debris	Scrap	N/A	N/A	N/A	1	4	0.1	Scrap Bin	None	
UXO2_01_T15A-2-00008	UXO2_01_T15A-2	3.4	10/13/2011	276897.80	3829526.00	No Contact	No Contact	N/A	N/A	N/A	0	0	0	Left in Place	None	
UXO2_01_T15A-2-00009	UXO2_01_T15A-2	3.3	10/13/2011	276894.80	3829531.00	No Contact	No Contact	N/A	N/A	N/A	0	0	0	Left in Place	None	
UXO2_01_T15A-2-00010	UXO2_01_T15A-2	3.8	10/13/2011	276893.60	3829534.00	No Contact	No Contact	N/A	N/A	N/A	0	0	0	Left in Place	None	
UXO2_01_T15A-2-00011	UXO2_01_T15A-2	3.7	10/13/2011	276892.80	3829535.90	No Contact	No Contact	N/A	N/A	N/A	0	0	0	Left in Place	None	
UXO2_01_T15A-2-00012	UXO2_01_T15A-2	12.4	10/13/2011	276885.60	3829549.10	Cultural Debris	Scrap	N/A	N/A	N/A	1	4	0.2	Scrap Bin	None	Cable
UXO2_01_T15A-2-00013	UXO2_01_T15A-2	16.6	10/12/2011	276860.70	3829580.00	Cultural Debris	Scrap	N/A	N/A	N/A	1	10	10	Scrap Bin	None	
UXO2_01_T15A-2-00014	UXO2_01_T15A-2	4.4	10/12/2011	276859.70	3829581.50	Cultural Debris	Scrap	N/A	N/A	N/A	1	10	0.1	Scrap Bin	None	
UXO2_01_T15A-2-00015	UXO2_01_T15A-2	5.0	10/12/2011	276846.40	3829599.80	Cultural Debris	Scrap	N/A	N/A	N/A	1	8	0.1	Scrap Bin	None	
UXO2_01_T16-1-00001	UXO2_01_T16-1	3.5	10/12/2011	277015.50	3829387.50	No Contact	No Contact	N/A	N/A	N/A	0	0	0	Left in Place	None	
UXO2_01_T16-2-00001	UXO2_01_T16-2	3.3	10/12/2011	277032.60	3829371.80	No Contact	No Contact	N/A	N/A	N/A	0	0	0	Left in Place	None	
UXO2_01_T16A-1-00001	UXO2_01_T16A-1	8.8	10/12/2011	276861.00	3829594.40	Cultural Debris	Scrap	N/A	N/A	N/A	1	2	0.5	Scrap Bin	None	
UXO2_01_T16A-1-00002	UXO2_01_T16A-1	4.1	10/12/2011	276860.10	3829595.70	Cultural Debris	Scrap	N/A	N/A	N/A	1	8	0.1	Scrap Bin	None	
UXO2_01_T16A-1-00003	UXO2_01_T16A-1	11.7	10/12/2011	276854.00	3829603.70	Cultural Debris	Scrap	N/A	N/A	N/A	1	6	0.1	Scrap Bin	None	
UXO2_01_T16A-2-00001	UXO2_01_T16A-2	3.3	10/12/2011	276870.00	3829585.10	No Contact	No Contact	N/A	N/A	N/A	0	0	0	Left in Place	None	
UXO2_01_T16A-2-00002	UXO2_01_T16A-2	9.6	10/12/2011	276866.50	3829589.80	Cultural Debris	Scrap	N/A	N/A	N/A	1	2	0.1	Scrap Bin	None	Nail
UXO2_01_T16A-2-00003	UXO2_01_T16A-2	33.6	10/12/2011	276861.40	3829596.60	Cultural Debris	Scrap	N/A	N/A	N/A	1	2	0.5	Scrap Bin	None	Cable
UXO2_01_T16A-2-00004	UXO2_01_T16A-2	4.0	10/12/2011	276857.70	3829601.50	Cultural Debris	Scrap	N/A	N/A	N/A	1	6	0.1	Scrap Bin	None	
UXO2_01_T16A-2-00005	UXO2_01_T16A-2	40.0	10/12/2011	276855.20	3829604.90	QC	QC Seed	QC Seed	N/A	N/A	1	6	0.25	Consolidation Point	None	QC Seed #19
UXO2_01_T21-1-00001	UXO2_01_T21-1	26.7	10/12/2011	276867.90	3829382.20	Cultural Debris	Scrap	N/A	N/A	N/A	1	1	0.1	Scrap Bin	None	Survey nail
UXO2_01_T21-1-00002	UXO2_01_T21-1	38.9	10/12/2011	276826.00	3829424.60	Cultural Debris	Scrap	N/A	N/A	N/A	1	2	0.2	Scrap Bin	None	
UXO2_01_T21-2-00001	UXO2_01_T21-2	6.5	10/12/2011	276845.90	3829402.50	Cultural Debris	Scrap	N/A	N/A	N/A	1	2	0.1	Scrap Bin	None	Alum can
UXO2_01_T21-2-00002	UXO2_01_T21-2	4.1	10/12/2011	276842.60	3829406.90	Cultural Debris	Scrap	N/A	N/A	N/A	1	6	0.1	Scrap Bin	None	
UXO2_01_T21-2-00003	UXO2_01_T21-2	3.1	10/12/2011	276839.00	3829411.70	No Contact	No Contact	N/A	N/A	N/A	0	0	0	Left in Place	None	
UXO2_01_T21-2-00004	UXO2_01_T21-2	12.3	10/12/2011	276827.10	3829425.50	QC	QC Seed	QC Seed	N/A	N/A	1	2	0.2	Consolidation Point	None	QC Seed #16
UXO2_01_T2-2-00001	UXO2_01_T2-2	10.3	10/11/2011	276917.00	3829292.70	Cultural Debris	Scrap	N/A	N/A	N/A	1	4	0.25	Scrap Bin	None	Wire
UXO2_01_T2-2-00002	UXO2_01_T2-2	769.6	10/11/2011	276914.70	3829296.30	Cultural Debris	Scrap	N/A	N/A	N/A	1	3	10	Scrap Bin	None	Pipe
UXO2_01_T22-1-00001	UXO2_01_T22-1	3.1	10/12/2011	276807.90	3829516.30	No Contact	No Contact	N/A	N/A	N/A	0	0	0	Left in Place	None	
UXO2_01_T22-2-00001	UXO2_01_T22-2	4.2	10/12/2011	276817.50	3829505.10	Cultural Debris	Scrap	N/A	N/A	N/A	1	6	0.1	Scrap Bin	None	
UXO2_01_T23-1-00001	UXO2_01_T23-1	3.1	10/12/2011	276809.50	3829531.30	No Contact	No Contact	N/A	N/A	N/A	0	0	0	Left in Place	None	
UXO2_01_T23-2-00001	UXO2_01_T23-2	5.5	10/12/2011	276822.50	3829513.80	MPPEH	Grenade	MKII, Hand, Practice, Standard	Empty	Unfuzed	1	12	1	Consolidation Point	Demil	Determined to be MDAS
UXO2_01_T23-2-00002	UXO2_01_T23-2	3.4	10/12/2011	276821.80	3829514.90	No Contact	No Contact	N/A	N/A	N/A	0	0	0	Left in Place	None	
UXO2_01_T3-1-00001	UXO2_01_T3-1	36.8	10/11/2011	276926.60	3829294.10	Cultural Debris	Scrap	N/A	N/A	N/A	1	2	2	Scrap Bin	None	Wire
UXO2_01_T3-1-00002	UXO2_01_T3-1	3.0	10/11/2011	276917.40	3829309.00	No Contact	No Contact	N/A	N/A	N/A	0	0	0	Left in Place	None	
UXO2_01_T3-1-00003	UXO2_01_T3-1	29.4	10/11/2011	276912.30	3829315.50	Cultural Debris	Scrap	N/A	N/A	N/A	2	1	0.2	Scrap Bin	None	Survey nails
UXO2_01_T4-1-00001	UXO2_01_T4-1	16.3	10/11/2011	276960.00	3829267.80	Cultural Debris	Scrap	N/A	N/A	N/A	2	1	0.1	Scrap Bin	None	Wire
UXO2_01_T4-1-00002	UXO2_01_T4-1	5.1	10/11/2011	276954.80	3829274.10	Cultural Debris	Scrap	N/A	N/A	N/A	1	3	0.2	Scrap Bin	None	Wire
UXO2_01_T4-1-00003	UXO2_01_T4-1	251.8	10/11/2011	276942.70	3829289.20	Facility Resource	Facility Resource	Fence	N/A	N/A	0	0	0	Left in Place	None	
UXO2_01_T4-1-00004	UXO2_01_T4-1	3.5	10/11/2011	276834.00	3829429.90	No Contact	No Contact	N/A	N/A	N/A	0	0	0	Left in Place	None	
UXO2_01_T4-1-00005	UXO2_01_T4-1	3.9	10/11/2011	276831.70	3829433.50	No Contact	No Contact	N/A	N/A	N/A	0	0	0	Left in Place	None	
UXO2_01_T4-2-00001	UXO2_01_T4-2	3.5	10/11/2011	276953.60	3829277.10	MPPEH	Small Arms	Expended Cartridge Cases (7.62mm Blank)	Empty	N/A	4	10	8	Consolidation Point	Demil	Determined to be MDAS
UXO2_01_T4-2-00002	UXO2_01_T4-2	3.7	10/11/2011	276925.50	3829312.50	MPPEH	Small Arms	Expended Cartridge Cases (7.62mm Blank)	Empty	N/A	1	6	0.1	Consolidation Point	Demil	Determined to be MDAS
UXO2_01_T4-2-00003	UXO2_01_T4-2	3.6	10/11/2011	276918.70	3829320.40	MPPEH	Small Arms	Expended Cartridge Cases (7.62mm Blank)	Empty	N/A	2	3	0.2	Consolidation Point	Demil	Determined to be MDAS
UXO2_01_T4-2-00004	UXO2_01_T4-2	4.7	10/11/2011	276885.30	3829369.60	Cultural Debris	Scrap	N/A	N/A	N/A	1	6	0.1	Scrap Bin	None	
UXO2_01_T4-2-00005	UXO2_01_T4-2	3.7	10/11/2011	276884.90	3829370.00	Cultural Debris	Scrap	N/A	N/A	N/A	1	6	0.1	Scrap Bin	None	
UXO2_01_T4-2-00006	UXO2_01_T4-2	3.2	10/11/2011	276877.50	3829380.50	MPPEH	Small Arms	Expended Cartridge Cases (7.62mm Blank)	Empty	N/A	7	4	0.6	Consolidation Point	Demil	Determined to be MDAS
UXO2_01_T4-2-00007	UXO2_01_T4-2	3.4	10/11/2011	276864.30	3829395.30	No Contact	No Contact	N/A	N/A	N/A	0	0	0	Left in Place	None	
UXO2_01_T5-1-00001	UXO2_01_T5-1	4.0	10/11/2011	276953.30	3829289.10	Cultural Debris	Scrap	N/A	N/A	N/A	1	6	0.1	Scrap Bin	None	
UXO2_01_T5-1-00002	UXO2_01_T5-1	3.1	10/11/2011	276951.10	3829290.70	MPPEH	Small Arms	Expended Cartridge Cases (7.62mm Blank)	Empty	N/A	1	2	0.1	Consolidation Point	Demil	Determined to be MDAS
UXO2_01_T5-1-00003	UXO2_01_T5-1	3.0	10/11/2011	276904.60	3829357.70	No Contact	No Contact	N/A	N/A	N/A	0	0	0	Left in Place	None	
UXO2_01_T5-1-00004	UXO2_01_T5-1	10.1	10/11/2011	276883.80	3829385.00	Cultural Debris	Scrap	N/A	N/A	N/A	1	1	0.1	Scrap Bin	None	Survey nail
UXO2_01_T5-1-00005	UXO2_01_T5-1	16.8	10/11/2011	276875.10	3829396.00	Cultural Debris	Scrap	N/A	N/A	N/A	1	1	0.2	Scrap Bin	None	
UXO2_01_T5-1-00006	UXO2_01_T5-1	3.9	10/11/2011	276832.40	3829451.30	No Contact	No Contact	N/A	N/A	N/A	0	0	0	Left in Place	None	
UXO2_01_T5-2-00001	UXO2_01_T5-2	3.9	10/11/2011	276948.20	3829297.50	MPPEH	Small Arms	Expended Cartridge Cases (7.62mm Blank)	Empty	N/A	1	2	0.1	Consolidation Point	Demil	Determined to be MDAS
UXO2_01_T5-2-00002	UXO2_01_T5-2	366.5	10/11/2011	276937.10	3829313.10	MPPEH	Small Arms	Expended Cartridge Cases (7.62mm Blank)	Empty	N/A	2	1	8	Consolidation Point	Demil	Determined to be MDAS
UXO2_01_T5-2-00003	UXO2_01_T5-2	19.0	10/11/2011	276935.10	3829315.60	Cultural Debris	Scrap	N/A	N/A	N/A	1	1	0.2	Scrap Bin	None	Survey nail
UXO2_01_T5-2-00004	UXO2_01_T5-2	4.1	10/11/2011	276908.90	3829353.70	Cultural Debris	Scrap	N/A	N/A	N/A	1	4	0.1	Scrap Bin	None	
UXO2_01_T5-2-00005	UXO2_01_T5-2	3.1	10/11/2011	276908.50	3829354.30	No Contact	No Contact	N/A	N/A	N/A	0	0	0	Left in Place	None	
UXO2_01_T5-2-00006	UXO2_01_T5-2	3.1	10/11/2011	276905.90	3829358.20	No Contact	No Contact	N/A	N/A	N/A	0	0	0	Left in Place	None	
UXO2_01_T5-2-00007	UXO2_01_T5-2	3.1	10/11/2011	276896.90	3829371.70	No Contact	No Contact	N/A	N/A	N/A	0	0	0	Left in Place	None	
UXO2_01_T5-2-00008	UXO2_01_T5-2	5.8	10/11/2011	276885.40	3829385.50	Cultural Debris	Scrap	N/A	N/A	N/A	1	4	0.1	Scrap Bin	None	
UXO2_01_T5-2-00009	UXO2_01_T5-2	52.8	10/11/2011	276876.60	3829396.50	Cultural Debris	Scrap	N/A	N/A	N/A	1	1	2	Scrap Bin	None	Chain
UXO2_01_T5-2-00010	UXO2_01_T5-2	3.9	10/11/2011	276866.80	3829409.00	Cultural Debris	Scrap	N/A	N/A	N/A	1	8	0.1	Scrap Bin	None	
UXO2_01_T5-2-00011	UXO2_01_T5-2	3.3	10/11/2011	276865.40	3829410.80	No Contact	No Contact	N/A	N/A	N/A	0	0	0	Left in Place	None	
UXO2_01_T5-2-00012	UXO2_01_T5-2	4.4	10/11/2011	276856.90	3829421.30	Cultural Debris	Scrap	N/A	N/A	N/A	1	6	0.1	Scrap Bin	None	
UXO2_01_T5-2-00013	UXO2_01_T5-2	3.1	10/11/2011	276824.90	3829461.50	No Contact	No Contact	N/A	N/A	N/A	0	0	0	Left in Place	None	
UXO2_01_T6-1-00001	UXO2_01_T6-1	6.2	10/11/2011	276964.70	3829294.60	MPPEH	Small Arms	Expended Cartridge Cases (7.62mm Blank)	Empty	N/A	3	2	0.2	Consolidation Point	Demil	Determined to be MDAS
UXO2_01_T6-1-00002	UXO2_01_T6-1	30.6	10/11/2011	276905.20	3829372.60	MPPEH	Small Arms	Expended Cartridge Cases (7.62mm Blank)	Empty	N/A	2	1	0.3	Consolidation Point	Demil	Determined to be MDAS
UXO2_01_T6-1-00003	UXO2_01_T6-1	44.2	10/11/2011	276845.00	3829452.70	Cultural Debris	Scrap	N/A	N/A	N/A	1	4	2	Scrap Bin	None	Wire
UXO2_01_T6-1-00004	UXO2_01_T6-1	3.5	10/11/2011	276836.00	3829462.70	No Contact	No Contact	N/A	N/A	N/A	0	0	0	Left in Place	None	
UXO2_01_T6-2-00001	UXO2_01_T6-2	3.2	10/11/2011	276988.70	3829268.70	No Contact	No Contact	N/A	N/A	N/A	0	0	0	Left in Place	None	
UXO2_01_T6-2-00002	UXO2_01_T6-2	3.6	10/11/2011	276947.40	3829318.60	No Contact	No Contact	N/A	N/A	N/A	0	0	0	Left in Place	None	
UXO2_01_T6-2-00003	UXO2_01_T6-2	3.3	10/11/2011	276898.90	3829382.10	No Contact	No Contact	N/A	N/A	N/A	0	0	0	Left in Place	None	
UXO2_01_T6-2-00004	UXO2_01_T6-2	3.9	10/11/2011	276898.20	3829382.90	No Contact	No Contact	N/A	N/A	N/A	0	0	0	Left in Place	None	
UXO2_01_T6-2-00005	UXO2_01_T6-2	3.1	10/11/2011	276872.80	3829416.50	No Contact	No Contact	N/A	N/A	N/A	0	0	0	Left in Place	None	
UXO2_01_T6-2-00006	UXO2_01_T6-2	3.1	10/11/2011	276852.80	3829445.70	No Contact	No Contact	N/A	N/A	N/A	0	0	0	Left in Place	None	

TABLE H-1

MEC Intrusive Investigation Results

Site UXO-02

MCIEAST-MCB CAMLEJ, North Carolina

Anomaly Identification	Grid	Amplitude (millivolts)	Dig Date	Easting (UTM)	Northing (UTM)	Item Group	Item Class	Category	Filler	Fuze	Quantity	Depth (inch)	Weight (pound)	Action Taken	Demolition Required?	Item Comment
UXO2_01_T7-1-00001	UXO2_01_T7-1	104.9	10/11/2011	276972.40	3829303.10	Cultural Debris	Scrap	N/A	N/A	N/A	1	2	4	Scrap Bin	None	
UXO2_01_T7-1-00002	UXO2_01_T7-1	3.3	10/11/2011	276969.80	3829305.10	No Contact	No Contact	N/A	N/A	N/A	0	0	0	Left in Place	None	
UXO2_01_T7-1-00003	UXO2_01_T7-1	16.9	10/11/2011	276949.30	3829334.30	Cultural Debris	Scrap	N/A	N/A	N/A	1	1	0.1	Scrap Bin	None	Nail
UXO2_01_T7-1-00004	UXO2_01_T7-1	25.2	10/11/2011	276926.30	3829361.90	Cultural Debris	Scrap	N/A	N/A	N/A	1	1	0.1	Scrap Bin	None	Survey nail
UXO2_01_T7-2-00001	UXO2_01_T7-2	4.8	10/11/2011	276992.20	3829281.20	Cultural Debris	Scrap	N/A	N/A	N/A	1	3	0.1	Scrap Bin	None	
UXO2_01_T7-2-00002	UXO2_01_T7-2	3.7	10/11/2011	276975.10	3829302.80	No Contact	No Contact	N/A	N/A	N/A	0	0	0	Left in Place	None	
UXO2_01_T7-2-00003	UXO2_01_T7-2	4.0	10/11/2011	276963.40	3829315.20	Cultural Debris	Scrap	N/A	N/A	N/A	1	8	0.1	Scrap Bin	None	
UXO2_01_T7-2-00004	UXO2_01_T7-2	3.1	10/11/2011	276941.60	3829343.20	No Contact	No Contact	N/A	N/A	N/A	0	0	0	Left in Place	None	
UXO2_01_T7-2-00005	UXO2_01_T7-2	3.4	10/11/2011	276926.40	3829363.50	No Contact	No Contact	N/A	N/A	N/A	0	0	0	Left in Place	None	
UXO2_01_T7-2-00006	UXO2_01_T7-2	4.0	10/11/2011	276891.80	3829406.90	Cultural Debris	Scrap	N/A	N/A	N/A	1	4	0.1	Scrap Bin	None	
UXO2_01_T7-2-00007	UXO2_01_T7-2	3.1	10/11/2011	276889.00	3829410.40	No Contact	No Contact	N/A	N/A	N/A	0	0	0	Left in Place	None	
UXO2_01_T7-2-00008	UXO2_01_T7-2	3.7	10/11/2011	276878.00	3829424.70	No Contact	No Contact	N/A	N/A	N/A	0	0	0	Left in Place	None	
UXO2_01_T7-2-00009	UXO2_01_T7-2	3.7	10/11/2011	276877.40	3829425.70	No Contact	No Contact	N/A	N/A	N/A	0	0	0	Left in Place	None	
UXO2_01_T7-2-00010	UXO2_01_T7-2	3.3	10/11/2011	276876.30	3829427.50	No Contact	No Contact	N/A	N/A	N/A	0	0	0	Left in Place	None	
UXO2_01_T7-2-00011	UXO2_01_T7-2	3.2	10/11/2011	276872.30	3829434.00	No Contact	No Contact	N/A	N/A	N/A	0	0	0	Left in Place	None	
UXO2_01_T7-2-00012	UXO2_01_T7-2	3.6	10/11/2011	276850.40	3829464.90	No Contact	No Contact	N/A	N/A	N/A	0	0	0	Left in Place	None	
UXO2_01_T8-1-00001	UXO2_01_T8-1	8.4	10/11/2011	276988.60	3829297.40	Cultural Debris	Scrap	N/A	N/A	N/A	1	6	0.25	Scrap Bin	None	
UXO2_01_T8-1-00002	UXO2_01_T8-1	4.4	10/11/2011	276894.70	3829416.40	Cultural Debris	Scrap	N/A	N/A	N/A	1	10	0.3	Scrap Bin	None	
UXO2_01_T8-2-00001	UXO2_01_T8-2	3.7	10/11/2011	276998.40	3829287.20	No Contact	No Contact	N/A	N/A	N/A	0	0	0	Left in Place	None	
UXO2_01_T8-2-00002	UXO2_01_T8-2	3.1	10/11/2011	276996.20	3829290.80	No Contact	No Contact	N/A	N/A	N/A	0	0	0	Left in Place	None	
UXO2_01_T8-2-00003	UXO2_01_T8-2	3.1	10/11/2011	276951.10	3829346.80	No Contact	No Contact	N/A	N/A	N/A	0	0	0	Left in Place	None	
UXO2_01_T8-2-00004	UXO2_01_T8-2	3.2	10/11/2011	276950.40	3829348.70	MPPEH	Small Arms	Expended Cartridge Cases (7.62mm Blank)	Empty	N/A	1	4	0.1	Consolidation Point	Demil	Determined to be MDAS
UXO2_01_T8-2-00005	UXO2_01_T8-2	4.3	10/11/2011	276943.90	3829355.10	Cultural Debris	Scrap	N/A	N/A	N/A	1	3	0.1	Scrap Bin	None	
UXO2_01_T8-2-00006	UXO2_01_T8-2	57.7	10/11/2011	276936.00	3829362.40	MPPEH	Small Arms	Expended Cartridge Cases (7.62mm Blank)	Empty	N/A	2	3	0.2	Consolidation Point	Demil	Determined to be MDAS
UXO2_01_T8-2-00007	UXO2_01_T8-2	3.7	10/11/2011	276897.30	3829415.50	No Contact	No Contact	N/A	N/A	N/A	0	0	0	Left in Place	None	
UXO2_01_T8-2-00008	UXO2_01_T8-2	48.6	10/11/2011	276896.00	3829417.00	Cultural Debris	Scrap	N/A	N/A	N/A	1	2	3	Scrap Bin	None	
UXO2_01_T8-2-00009	UXO2_01_T8-2	3.3	10/11/2011	276881.50	3829435.00	MPPEH	Small Arms	Expended Cartridge Cases (7.62mm Blank)	Empty	N/A	2	1	0.2	Consolidation Point	Demil	Determined to be MDAS
UXO2_01_T8-2-00010	UXO2_01_T8-2	3.5	10/11/2011	276877.60	3829440.70	Cultural Debris	Scrap	N/A	N/A	N/A	8	2	0.25	Scrap Bin	None	Cable
UXO2_01_T8-2-00011	UXO2_01_T8-2	3.3	10/11/2011	276865.80	3829459.40	No Contact	No Contact	N/A	N/A	N/A	0	0	0	Left in Place	None	
UXO2_01_T8-2-00012	UXO2_01_T8-2	4.6	10/11/2011	276857.50	3829471.20	MPPEH	Small Arms	Expended Cartridge Cases (7.62mm Blank)	Empty	N/A	2	1	0.1	Consolidation Point	Demil	Determined to be MDAS
UXO2_01_T9-1-00001	UXO2_01_T9-1	3.9	10/14/2011	276976.30	3829328.80	No Contact	No Contact	N/A	N/A	N/A	0	0	0	Left in Place	None	
UXO2_01_T9-1-00002	UXO2_01_T9-1	10.5	10/14/2011	276868.20	3829471.50	Cultural Debris	Scrap	N/A	N/A	N/A	2	4	0.25	Scrap Bin	None	
UXO2_01_T9-1-00003	UXO2_01_T9-1	4.2	10/14/2011	276856.40	3829486.00	Cultural Debris	Scrap	N/A	N/A	N/A	1	6	0.1	Scrap Bin	None	
UXO2_01_T9-1-00004	UXO2_01_T9-1	3.7	10/14/2011	276855.70	3829486.80	No Contact	No Contact	N/A	N/A	N/A	0	0	0	Left in Place	None	
UXO2_01_T9-2-00001	UXO2_01_T9-2	3.5	10/12/2011	277010.50	3829296.90	No Contact	No Contact	N/A	N/A	N/A	0	0	0	Left in Place	None	
UXO2_01_T9-2-00002	UXO2_01_T9-2	3.2	10/11/2011	276970.60	3829338.30	Cultural Debris	Scrap	N/A	N/A	N/A	1	4	0.1	Scrap Bin	None	Wire
UXO2_01_T9-2-00003	UXO2_01_T9-2	3.4	10/11/2011	276898.60	3829430.20	No Contact	No Contact	N/A	N/A	N/A	0	0	0	Left in Place	None	
UXO2_01_T9-2-00004	UXO2_01_T9-2	3.5	10/11/2011	276883.00	3829453.20	Cultural Debris	Scrap	N/A	N/A	N/A	1	3	0.1	Scrap Bin	None	Wire
UXO2_01_T9-2-00005	UXO2_01_T9-2	46.1	10/11/2011	276869.70	3829471.60	Cultural Debris	Scrap	N/A	N/A	N/A	4	1	0.4	Scrap Bin	None	Cable
UXO2_01_T9-2-00006	UXO2_01_T9-2	28.4	10/11/2011	276869.20	3829472.10	Cultural Debris	Scrap	N/A	N/A	N/A	1	2	0.25	Scrap Bin	None	
UXO2_01_T9-2-00007	UXO2_01_T9-2	28.5	10/14/2011	276867.20	3829474.60	MEC	Grenade	MKII, Hand, Practice, Standard	HE	Yes	1	3	0.5	Consolidation Point	Demo	MK2 hand grenade fuzed, item was disposed of at (277229.40, 382869.4 - UTMs). The location of discovery has a dead fall and no easy vehicular access. The chosen location of disposal is free of dead fall and had easy access to a road way.
UXO2_01_T9-2-00008	UXO2_01_T9-2	3.7	10/14/2011	276857.60	3829486.40	No Contact	No Contact	N/A	N/A	N/A	0	0	0	Left in Place	None	
UXO2_02_T10-1-00001	UXO2_02_T10-1	3.2	10/5/2011	277190.30	3828967.30	No Contact	No Contact	N/A	N/A	N/A	0	0	0	Left in Place	None	
UXO2_02_T11-1-00001	UXO2_02_T11-1	3.7	10/5/2011	277194.80	3828973.90	No Contact	No Contact	N/A	N/A	N/A	0	0	0	Left in Place	None	
UXO2_02_T11-1-00002	UXO2_02_T11-1	8.8	10/5/2011	277186.00	3828985.90	Cultural Debris	Scrap	N/A	N/A	N/A	1	8	5	Scrap Bin	None	Chain
UXO2_02_T11-1-00003	UXO2_02_T11-1	3.3	10/5/2011	277166.90	3829013.20	No Contact	No Contact	N/A	N/A	N/A	0	0	0	Left in Place	None	
UXO2_02_T11-2-00001	UXO2_02_T11-2	3.4	10/5/2011	277204.50	3828966.20	No Contact	No Contact	N/A	N/A	N/A	0	0	0	Left in Place	None	
UXO2_02_T12-2-00001	UXO2_02_T12-2	3.1	10/5/2011	277195.10	3828989.80	No Contact	No Contact	N/A	N/A	N/A	0	0	0	Left in Place	None	
UXO2_02_T12-2-00002	UXO2_02_T12-2	3.2	10/5/2011	277194.20	3828990.50	No Contact	No Contact	N/A	N/A	N/A	0	0	0	Left in Place	None	
UXO2_02_T12-2-00003	UXO2_02_T12-2	4.5	10/5/2011	277182.80	3829005.00	Cultural Debris	Scrap	N/A	N/A	N/A	1	2	0.5	Scrap Bin	None	
UXO2_02_T12-2-00004	UXO2_02_T12-2	3.1	10/5/2011	277175.00	3829019.00	No Contact	No Contact	N/A	N/A	N/A	0	0	0	Left in Place	None	
UXO2_02_T12-2-00005	UXO2_02_T12-2	3.4	10/5/2011	277172.70	3829024.20	No Contact	No Contact	N/A	N/A	N/A	0	0	0	Left in Place	None	
UXO2_02_T12-2-00006	UXO2_02_T12-2	3.7	10/5/2011	277171.60	3829025.60	No Contact	No Contact	N/A	N/A	N/A	0	0	0	Left in Place	None	
UXO2_02_T13-1-00001	UXO2_02_T13-1	3.3	10/5/2011	277229.40	3828969.40	No Contact	No Contact	N/A	N/A	N/A	0	0	0	Left in Place	None	
UXO2_02_T13-1-00002	UXO2_02_T13-1	3.6	10/5/2011	277219.60	3828983.40	No Contact	No Contact	N/A	N/A	N/A	0	0	0	Left in Place	None	
UXO2_02_T13-1-00003	UXO2_02_T13-1	4.0	9/26/2011	277173.90	3829038.10	Cultural Debris	Scrap	N/A	N/A	N/A	1	2	0.1	Scrap Bin	None	
UXO2_02_T13-2-00001	UXO2_02_T13-2	3.5	10/5/2011	277230.60	3828969.50	No Contact	No Contact	N/A	N/A	N/A	0	0	0	Left in Place	None	
UXO2_02_T14-1-00001	UXO2_02_T14-1	3.6	10/5/2011	277192.20	3829030.00	No Contact	No Contact	N/A	N/A	N/A	0	0	0	Left in Place	None	
UXO2_02_T14-1-00002	UXO2_02_T14-1	17.8	10/5/2011	277178.70	3829046.90	Cultural Debris	Scrap	N/A	N/A	N/A	1	0	0.5	Scrap Bin	None	
UXO2_02_T14-1-00003	UXO2_02_T14-1	3.4	10/5/2011	277169.20	3829059.70	No Contact	No Contact	N/A	N/A	N/A	0	0	0	Left in Place	None	
UXO2_02_T14-2-00001	UXO2_02_T14-2	6.5	10/5/2011	277171.80	3829057.70	Cultural Debris	Scrap	N/A	N/A	N/A	1	8	2	Scrap Bin	None	
UXO2_02_T15-1-00001	UXO2_02_T15-1	4.2	10/5/2011	277244.60	3828976.20	Cultural Debris	Scrap	N/A	N/A	N/A	1	3	0.2	Scrap Bin	None	
UXO2_02_T15-1-00002	UXO2_02_T15-1	3.0	9/26/2011	277197.80	3829041.70	Cultural Debris	Scrap	N/A	N/A	N/A	1	6	1	Scrap Bin	None	
UXO2_02_T15-1-00003	UXO2_02_T15-1	5.3	10/5/2011	277173.90	3829064.80	Cultural Debris	Scrap	N/A	N/A	N/A	1	3	0.2	Scrap Bin	None	
UXO2_02_T15-1-00004	UXO2_02_T15-1	5.0	10/5/2011	277170.90	3829067.40	Cultural Debris	Scrap	N/A	N/A	N/A	1	6	0.2	Scrap Bin	None	
UXO2_02_T15-2-00001	UXO2_02_T15-2	3.2	10/5/2011	277245.40	3828977.20	No Contact	No Contact	N/A	N/A	N/A	0	0	0	Left in Place	None	
UXO2_02_T15-2-00002	UXO2_02_T15-2	28.7	10/5/2011	277180.80	3829062.30	Cultural Debris	Scrap	N/A	N/A	N/A	1	3	0.1	Scrap Bin	None	Alum can
UXO2_02_T15-2-00003	UXO2_02_T15-2	3.2	10/5/2011	277174.20	3829066.10	Cultural Debris	Scrap	N/A	N/A	N/A	1	3	0.1	Scrap Bin	None	
UXO2_02_T15-2-00004	UXO2_02_T15-2	3.5	10/5/2011	277171.20	3829074.10	Cultural Debris	Scrap	N/A	N/A	N/A	1	2	0.1	Scrap Bin	None	Wire
UXO2_02_T16-1-00001	UXO2_02_T16-1	4.8	10/5/2011	277262.10	3828969.40	Cultural Debris	Scrap	N/A	N/A	N/A	1	4	0.1	Scrap Bin	None	
UXO2_02_T16-1-00002	UXO2_02_T16-1	3.8	10/5/2011	277255.60	3828975.20	No Contact	No Contact	N/A	N/A	N/A	0	0	0	Left in Place	None	
UXO2_02_T16-1-00003	UXO2_02_T16-1	3.1	10/5/2011	277244.00	3828992.00	No Contact	No Contact	N/A	N/A	N/A	0	0	0	Left in Place	None	
UXO2_02_T16-1-00004	UXO2_02_T16-1	4.5	10/5/2011	277225.50	3829018.80	Cultural Debris	Scrap	N/A	N/A	N/A	1	6	0.2	Scrap Bin	None	
UXO2_02_T16-1-00005	UXO2_02_T16-1	4.2	10/5/2011	277198.60	3829061.90	Cultural Debris	Scrap	N/A	N/A	N/A	1	3	0.1	Scrap Bin	None	
UXO2_02_T16-1-00006	UXO2_02_T16-1	5.0	10/5/2011	277198.00	3829063.70	Cultural Debris	Scrap	N/A	N/A	N/A	1	3	0.2	Scrap Bin	None	

TABLE H-1

MEC Intrusive Investigation Results

Site UXO-02

MCIEAST-MCB CAMLEJ, North Carolina

Anomaly Identification	Grid	Amplitude (millivolts)	Dig Date	Easting (UTM)	Northing (UTM)	Item Group	Item Class	Category	Filler	Fuze	Quantity	Depth (inch)	Weight (pound)	Action Taken	Demolition Required?	Item Comment
UXO2_02_T16-1-00007	UXO2_02_T16-1	4.9	10/5/2011	277197.60	3829064.60	Cultural Debris	Scrap	N/A	N/A	N/A	1	2	0.2	Scrap Bin	None	
UXO2_02_T16-1-00008	UXO2_02_T16-1	83.9	10/5/2011	277194.80	3829069.50	TBD	TBD	Other (see comments)	N/A	N/A	0	0	0	Left in Place	None	Blocked by dead fall
UXO2_02_T16-1-00009	UXO2_02_T16-1	95.5	10/5/2011	277193.20	3829069.90	TBD	TBD	Other (see comments)	N/A	N/A	0	0	0	Left in Place	None	Blocked by dead fall
UXO2_02_T16-1-00010	UXO2_02_T16-1	3.1	10/5/2011	277185.00	3829072.70	Cultural Debris	Scrap	N/A	N/A	N/A	1	6	0.2	Scrap Bin	None	Nail
UXO2_02_T16-2-00001	UXO2_02_T16-2	3.6	10/5/2011	277264.90	3828968.70	No Contact	No Contact	N/A	N/A	N/A	0	0	0	Left in Place	None	
UXO2_02_T16-2-00002	UXO2_02_T16-2	4.3	10/5/2011	277263.70	3828969.70	No Contact	No Contact	N/A	N/A	N/A	0	0	0	Left in Place	None	
UXO2_02_T16-2-00003	UXO2_02_T16-2	3.4	10/5/2011	277262.00	3828971.30	No Contact	No Contact	N/A	N/A	N/A	0	0	0	Left in Place	None	
UXO2_02_T16-2-00004	UXO2_02_T16-2	3.3	10/5/2011	277199.60	3829062.90	No Contact	No Contact	N/A	N/A	N/A	0	0	0	Left in Place	None	
UXO2_02_T16-2-00005	UXO2_02_T16-2	13.3	10/5/2011	277199.10	3829064.20	Cultural Debris	Scrap	N/A	N/A	N/A	1	4	0.2	Scrap Bin	None	Alum can
UXO2_02_T16-2-00006	UXO2_02_T16-2	7.4	10/5/2011	277198.50	3829066.00	Cultural Debris	Scrap	N/A	N/A	N/A	1	3	0.2	Scrap Bin	None	
UXO2_02_T16-2-00007	UXO2_02_T16-2	13.4	10/5/2011	277192.30	3829071.70	No Contact	No Contact	N/A	N/A	N/A	0	0	0	Left in Place	None	
UXO2_02_T16-2-00008	UXO2_02_T16-2	6.4	10/5/2011	277175.70	3829088.00	Cultural Debris	Scrap	N/A	N/A	N/A	2	3	0.1	Scrap Bin	None	
UXO2_02_T3-1-00001	UXO2_02_T3-1	88.4	10/5/2011	277100.10	3828969.10	Cultural Debris	Scrap	N/A	N/A	N/A	5	0	0.5	Scrap Bin	None	
UXO2_02_T3-1-00002	UXO2_02_T3-1	166.6	10/5/2011	277098.60	3828970.50	Cultural Debris	Scrap	N/A	N/A	N/A	8	1	5	Scrap Bin	None	
UXO2_02_T3-2-00001	UXO2_02_T3-2	5.0	10/5/2011	277105.10	3828963.70	Cultural Debris	Scrap	N/A	N/A	N/A	1	2	0.1	Scrap Bin	None	
UXO2_02_T4-1-00001	UXO2_02_T4-1	6.4	10/5/2011	277118.90	3828961.50	Cultural Debris	Scrap	N/A	N/A	N/A	1	2	0.1	Scrap Bin	None	
UXO2_02_T4-1-00002	UXO2_02_T4-1	3.7	10/5/2011	277118.40	3828962.40	Cultural Debris	Scrap	N/A	N/A	N/A	1	8	0.25	Scrap Bin	None	
UXO2_02_T4-2-00001	UXO2_02_T4-2	7.0	10/5/2011	277120.00	3828961.60	Cultural Debris	Scrap	N/A	N/A	N/A	1	8	2	Scrap Bin	None	Nail
UXO2_02_T4-2-00002	UXO2_02_T4-2	7.2	10/5/2011	277119.70	3828962.20	Cultural Debris	Scrap	N/A	N/A	N/A	1	1	0.1	Scrap Bin	None	
UXO2_02_T5-1-00001	UXO2_02_T5-1	37.6	10/5/2011	277128.10	3828965.50	TBD	TBD	Other (see comments)	N/A	N/A	0	0	0	Left in Place	None	Yellow jackets nest
UXO2_02_T5-1-00002	UXO2_02_T5-1	3.4	10/5/2011	277122.80	3828971.10	Cultural Debris	Scrap	N/A	N/A	N/A	1	3	0.1	Scrap Bin	None	Alum can
UXO2_02_T5-1-00003	UXO2_02_T5-1	3.4	10/5/2011	277118.70	3828975.70	No Contact	No Contact	N/A	N/A	N/A	0	0	0	Left in Place	None	
UXO2_02_T5-1-00004	UXO2_02_T5-1	130.4	10/5/2011	277113.50	3828982.00	Cultural Debris	Scrap	N/A	N/A	N/A	1	1	0.25	Scrap Bin	None	Wire
UXO2_02_T5-1-00005	UXO2_02_T5-1	250.8	10/5/2011	277112.20	3828983.60	Cultural Debris	Scrap	N/A	N/A	N/A	12	0	10	Scrap Bin	None	
UXO2_02_T5-2-00001	UXO2_02_T5-2	7.5	10/5/2011	277130.80	3828964.20	TBD	TBD	Other (see comments)	N/A	N/A	0	0	0	Left in Place	None	Yellow jackets nest
UXO2_02_T6-2-00001	UXO2_02_T6-2	6.1	10/5/2011	277124.60	3828988.50	Cultural Debris	Scrap	N/A	N/A	N/A	1	1	0.1	Scrap Bin	None	Wire
UXO2_02_T7-1-00001	UXO2_02_T7-1	242.6	10/5/2011	277159.30	3828962.60	Cultural Debris	Scrap	Other (see comments)	N/A	N/A	80	24	20	Scrap Bin	None	Pit of scrap metal, excavated and evaluated 2-ft deep 3-ft radius around flag
UXO2_02_T7-1-00002	UXO2_02_T7-1	7.3	10/5/2011	277157.90	3828963.80	Cultural Debris	Scrap	N/A	N/A	N/A	1	8	0.2	Scrap Bin	None	Alum can
UXO2_02_T7-1-00003	UXO2_02_T7-1	3.1	10/5/2011	277154.10	3828966.80	Cultural Debris	Scrap	N/A	N/A	N/A	1	4	0.1	Scrap Bin	None	
UXO2_02_T7-1-00004	UXO2_02_T7-1	3.7	10/5/2011	277147.20	3828972.60	No Contact	No Contact	N/A	N/A	N/A	0	0	0	Left in Place	None	
UXO2_02_T7-1-00005	UXO2_02_T7-1	3.8	10/5/2011	277143.80	3828977.00	No Contact	No Contact	N/A	N/A	N/A	0	0	0	Left in Place	None	
UXO2_02_T7-1-00006	UXO2_02_T7-1	3.1	10/5/2011	277140.60	3828980.10	No Contact	No Contact	N/A	N/A	N/A	0	0	0	Left in Place	None	
UXO2_02_T7-1-00007	UXO2_02_T7-1	143.3	10/5/2011	277126.40	3828997.00	Cultural Debris	Scrap	N/A	N/A	N/A	1	0	2	Scrap Bin	None	Pipe
UXO2_02_T7-2-00001	UXO2_02_T7-2	37.0	10/5/2011	277159.10	3828964.20	Cultural Debris	Scrap	Other (see comments)	N/A	N/A	10	0	2	Scrap Bin	None	Pit of scrap metal, excavated and evaluated 2-ft deep 3-ft radius around flag
UXO2_02_T7-2-00002	UXO2_02_T7-2	29.6	10/5/2011	277157.30	3828965.90	Cultural Debris	Scrap	Other (see comments)	N/A	N/A	15	24	4	Scrap Bin	None	Pit of scrap metal, excavated and evaluated 2-ft deep 3-ft radius around flag
UXO2_02_T7-2-00003	UXO2_02_T7-2	3.4	10/5/2011	277154.70	3828967.90	No Contact	No Contact	N/A	N/A	N/A	0	0	0	Left in Place	None	
UXO2_02_T7-2-00004	UXO2_02_T7-2	5.8	10/5/2011	277149.40	3828971.40	Cultural Debris	Scrap	N/A	N/A	N/A	1	2	0.1	Scrap Bin	None	
UXO2_02_T7-2-00005	UXO2_02_T7-2	639.4	10/5/2011	277128.30	3828997.00	Cultural Debris	Scrap	N/A	N/A	N/A	1	0	2	Scrap Bin	None	Pipe
UXO2_02_T8-1-00001	UXO2_02_T8-1	4.8	10/5/2011	277158.80	3828973.50	Cultural Debris	Scrap	N/A	N/A	N/A	1	2	0.1	Scrap Bin	None	
UXO2_02_T8-1-00002	UXO2_02_T8-1	3.0	10/5/2011	277152.20	3828982.20	No Contact	No Contact	N/A	N/A	N/A	0	0	0	Left in Place	None	
UXO2_02_T8-1-00003	UXO2_02_T8-1	8.0	10/5/2011	277144.30	3828997.80	Cultural Debris	Scrap	N/A	N/A	N/A	1	0	0.2	Scrap Bin	None	Survey nail, influence from well
UXO2_02_T8-2-00001	UXO2_02_T8-2	3.1	10/5/2011	277150.70	3828994.60	No Contact	No Contact	N/A	N/A	N/A	0	0	0	Left in Place	None	
UXO2_02_T9-1-00001	UXO2_02_T9-1	3.3	10/5/2011	277143.50	3829012.50	No Contact	No Contact	N/A	N/A	N/A	0	0	0	Left in Place	None	
UXO2_02_T9-2-00001	UXO2_02_T9-2	3.2	10/5/2011	277166.50	3828981.50	No Contact	No Contact	N/A	N/A	N/A	0	0	0	Left in Place	None	
UXO2_03_T1-00001	UXO2_03_T1	47.4	9/25/2011	276757.30	3828772.30	Cultural Debris	Scrap	N/A	N/A	N/A	3	3	0.5	Scrap Bin	None	
UXO2_03_T1-00002	UXO2_03_T1	4.1	9/25/2011	276755.50	3828776.80	Cultural Debris	Scrap	N/A	N/A	N/A	1	2	0.1	Scrap Bin	None	
UXO2_03_T1-00003	UXO2_03_T1	7.6	9/25/2011	276749.40	3828787.80	Cultural Debris	Scrap	N/A	N/A	N/A	1	0	0.2	Scrap Bin	None	
UXO2_03_T1-00004	UXO2_03_T1	3.3	9/25/2011	276743.30	3828793.60	Cultural Debris	Scrap	N/A	N/A	N/A	12	2	0.1	Scrap Bin	None	
UXO2_03_T10-1-00001	UXO2_03_T10-1	3.2	9/26/2011	276866.80	3828781.30	Cultural Debris	Scrap	N/A	N/A	N/A	1	3	0.1	Scrap Bin	None	
UXO2_03_T10-1-00002	UXO2_03_T10-1	95.4	9/26/2011	276863.90	3828784.10	MPPEH	Flare	M127A1, Star Parachute	Empty	Unfuzed	1	1	0.2	Consolidation Point	Demil	Determined to be MDAS
UXO2_03_T10-1-00003	UXO2_03_T10-1	3.2	9/26/2011	276862.70	3828785.30	Cultural Debris	Scrap	N/A	N/A	N/A	3	2	0.1	Scrap Bin	None	
UXO2_03_T10-1-00004	UXO2_03_T10-1	4.6	9/25/2011	276841.80	3828812.50	Cultural Debris	Scrap	N/A	N/A	N/A	6	4	0.2	Scrap Bin	None	
UXO2_03_T10-1-00005	UXO2_03_T10-1	23.5	9/25/2011	276839.70	3828815.20	Cultural Debris	Scrap	N/A	N/A	N/A	5	3	0.2	Scrap Bin	None	
UXO2_03_T10-1-00006	UXO2_03_T10-1	3.4	9/25/2011	276836.10	3828820.00	Cultural Debris	Scrap	N/A	N/A	N/A	5	4	0.2	Scrap Bin	None	
UXO2_03_T10-1-00007	UXO2_03_T10-1	3.6	9/25/2011	276835.70	3828820.60	Cultural Debris	Scrap	N/A	N/A	N/A	3	4	0.1	Scrap Bin	None	
UXO2_03_T10-1-00008	UXO2_03_T10-1	4.3	9/25/2011	276815.80	3828846.80	Cultural Debris	Scrap	N/A	N/A	N/A	2	2	0.1	Scrap Bin	None	
UXO2_03_T10-1-00009	UXO2_03_T10-1	3.8	9/25/2011	276803.80	3828863.40	Cultural Debris	Scrap	N/A	N/A	N/A	3	6	0.1	Scrap Bin	None	
UXO2_03_T10-2-00001	UXO2_03_T10-2	6.3	9/26/2011	276867.90	3828781.40	Cultural Debris	Scrap	N/A	N/A	N/A	1	3	2	Scrap Bin	None	
UXO2_03_T10-2-00002	UXO2_03_T10-2	4.1	9/26/2011	276838.60	3828818.70	Cultural Debris	Scrap	N/A	N/A	N/A	3	6	0.1	Scrap Bin	None	
UXO2_03_T10-2-00003	UXO2_03_T10-2	118.7	9/26/2011	276837.40	3828820.40	Cultural Debris	Scrap	N/A	N/A	N/A	1	3	2	Scrap Bin	None	
UXO2_03_T10-2-00004	UXO2_03_T10-2	7.8	9/25/2011	276816.80	3828847.80	Cultural Debris	Scrap	N/A	N/A	N/A	1	4	0.2	Scrap Bin	None	
UXO2_03_T10-2-00005	UXO2_03_T10-2	4.1	9/25/2011	276799.50	3828870.40	Cultural Debris	Scrap	N/A	N/A	N/A	1	5	0.2	Scrap Bin	None	
UXO2_03_T11-1-00001	UXO2_03_T11-1	3.3	9/26/2011	276875.20	3828784.50	Cultural Debris	Scrap	N/A	N/A	N/A	8	4	0.1	Scrap Bin	None	
UXO2_03_T11-1-00002	UXO2_03_T11-1	3.7	9/26/2011	276872.20	3828786.80	Cultural Debris	Scrap	N/A	N/A	N/A	1	3	0.1	Scrap Bin	None	
UXO2_03_T11-1-00003	UXO2_03_T11-1	3.9	9/25/2011	276850.30	3828817.20	Cultural Debris	Scrap	N/A	N/A	N/A	2	2	0.1	Scrap Bin	None	
UXO2_03_T11-1-00004	UXO2_03_T11-1	4.2	9/25/2011	276849.10	3828818.80	Cultural Debris	Scrap	N/A	N/A	N/A	1	3	0.1	Scrap Bin	None	
UXO2_03_T11-1-00005	UXO2_03_T11-1	3.5	9/25/2011	276837.90	3828834.00	Cultural Debris	Scrap	N/A	N/A	N/A	4	2	0.1	Scrap Bin	None	
UXO2_03_T11-1-00006	UXO2_03_T11-1	3.5	9/25/2011	276833.50	3828839.80	Cultural Debris	Scrap	N/A	N/A	N/A	1	2	0.1	Scrap Bin	None	
UXO2_03_T11-1-00007	UXO2_03_T11-1	3.9	9/25/2011	276825.50	3828850.00	Cultural Debris	Scrap	N/A	N/A	N/A	3	3	0.1	Scrap Bin	None	
UXO2_03_T11-1-00008	UXO2_03_T11-1	6.6	9/25/2011	276815.70	3828866.20	Cultural Debris	Scrap	N/A	N/A	N/A	2	5	0.1	Scrap Bin	None	
UXO2_03_T11-1-00009	UXO2_03_T11-1	56.8	9/25/2011	276805.10	3828878.10	Cultural Debris	Scrap	N/A	N/A	N/A	4	2	0.2	Scrap Bin	None	
UXO2_03_T11-2-00001	UXO2_03_T11-2	4.9	9/25/2011	276827.20	3828849.90	Cultural Debris	Scrap	N/A	N/A	N/A	5	2	0.1	Scrap Bin	None	
UXO2_03_T12-1-00001	UXO2_03_T12-1	3.2	9/26/2011	276892.80	3828780.20	Cultural Debris	Scrap	N/A	N/A	N/A	4	4	0.1	Scrap Bin	None	
UXO2_03_T12-1-00002	UXO2_03_T12-1	6.4	9/25/2011	276850.20	3828833.90	Cultural Debris	Scrap	N/A	N/A	N/A	1	6	0.1	Scrap Bin	None	
UXO2_03_T12-1-00003	UXO2_03_T12-1	3.1	9/25/2011	276849.50	3828834.90	Cultural Debris	Scrap	N/A	N/A	N/A	1	6	0.1	Scrap Bin	None	
UXO2_03_T12-1-00004	UXO2_03_T12-1	3.2	9/25/2011	276844.10	3828842.50	Cultural Debris	Scrap	N/A	N/A	N/A	1	6	0.1	Scrap Bin	None	

TABLE H-1

MEC Intrusive Investigation Results

Site UXO-02

MCIEAST-MCB CAMLEJ, North Carolina

Anomaly Identification	Grid	Amplitude (millivolts)	Dig Date	Easting (UTM)	Northing (UTM)	Item Group	Item Class	Category	Filler	Fuze	Quantity	Depth (inch)	Weight (pound)	Action Taken	Demolition Required?	Item Comment
UXO2_03_T12-1-00005	UXO2_03_T12-1	4.3	9/25/2011	276836.80	3828852.70	Cultural Debris	Scrap	N/A	N/A	N/A	1	4	0.1	Scrap Bin	None	
UXO2_03_T12-1-00006	UXO2_03_T12-1	3.1	9/25/2011	276835.90	3828853.90	Cultural Debris	Scrap	N/A	N/A	N/A	1	3	0.1	Scrap Bin	None	
UXO2_03_T12-1-00007	UXO2_03_T12-1	4.6	9/25/2011	276829.40	3828862.30	Cultural Debris	Scrap	N/A	N/A	N/A	1	4	0.1	Scrap Bin	None	
UXO2_03_T12-1-00008	UXO2_03_T12-1	4.1	9/25/2011	276819.80	3828873.60	Cultural Debris	Scrap	N/A	N/A	N/A	3	5	0.2	Scrap Bin	None	
UXO2_03_T12-1-00009	UXO2_03_T12-1	60.4	9/25/2011	276811.40	3828884.70	Cultural Debris	Scrap	N/A	N/A	N/A	35	14	2.5	Scrap Bin	None	
UXO2_03_T12-2-00001	UXO2_03_T12-2	3.2	9/25/2011	276837.10	3828854.40	Cultural Debris	Scrap	N/A	N/A	N/A	1	5	0.1	Scrap Bin	None	
UXO2_03_T13-1-00001	UXO2_03_T13-1	3.5	9/26/2011	276906.20	3828780.90	Cultural Debris	Scrap	N/A	N/A	N/A	5	2	0.1	Scrap Bin	None	
UXO2_03_T13-1-00002	UXO2_03_T13-1	3.8	9/26/2011	276896.40	3828790.30	Cultural Debris	Scrap	N/A	N/A	N/A	4	2	0.1	Scrap Bin	None	
UXO2_03_T13-1-00003	UXO2_03_T13-1	3.7	9/26/2011	276858.20	3828839.30	Cultural Debris	Scrap	N/A	N/A	N/A	1	2	0.1	Scrap Bin	None	
UXO2_03_T13-1-00004	UXO2_03_T13-1	3.7	9/25/2011	276855.20	3828842.70	Cultural Debris	Scrap	N/A	N/A	N/A	2	4	0.1	Scrap Bin	None	
UXO2_03_T13-2-00001	UXO2_03_T13-2	3.3	9/26/2011	276898.70	3828789.70	Cultural Debris	Scrap	N/A	N/A	N/A	20	6	0.1	Scrap Bin	None	
UXO2_03_T13-2-00002	UXO2_03_T13-2	3.3	9/26/2011	276890.20	3828802.60	Cultural Debris	Scrap	N/A	N/A	N/A	2	2	0.1	Scrap Bin	None	
UXO2_03_T13-2-00003	UXO2_03_T13-2	12.8	9/25/2011	276820.60	3828895.90	Cultural Debris	Scrap	N/A	N/A	N/A	1	0	0.1	Scrap Bin	None	
UXO2_03_T14-1-00001	UXO2_03_T14-1	3.8	9/26/2011	276916.60	3828784.20	Cultural Debris	Scrap	N/A	N/A	N/A	5	3	0.1	Scrap Bin	None	
UXO2_03_T14-1-00002	UXO2_03_T14-1	96.0	9/26/2011	276906.40	3828793.90	Cultural Debris	Scrap	N/A	N/A	N/A	2	2	0.1	Scrap Bin	None	
UXO2_03_T14-1-00003	UXO2_03_T14-1	4.5	9/26/2011	276901.90	3828799.30	Cultural Debris	Scrap	N/A	N/A	N/A	3	2	0.1	Scrap Bin	None	
UXO2_03_T14-1-00004	UXO2_03_T14-1	4.2	9/25/2011	276885.10	3828822.00	Cultural Debris	Scrap	N/A	N/A	N/A	2	2	0.1	Scrap Bin	None	
UXO2_03_T14-1-00005	UXO2_03_T14-1	3.4	9/25/2011	276867.70	3828843.80	Cultural Debris	Scrap	N/A	N/A	N/A	2	3	0.1	Scrap Bin	None	
UXO2_03_T14-1-00006	UXO2_03_T14-1	3.1	9/25/2011	276864.30	3828847.90	Cultural Debris	Scrap	N/A	N/A	N/A	1	3	0.1	Scrap Bin	None	
UXO2_03_T14-1-00007	UXO2_03_T14-1	17.4	9/25/2011	276860.30	3828852.70	MPPEH	Grenade	MKII, Hand, Practice, Standard	Empty	Unfuzed	1	3	1	Consolidation Point	Demil	Determined to be MDAS
UXO2_03_T14-1-00008	UXO2_03_T14-1	3.2	9/25/2011	276846.10	3828871.00	Cultural Debris	Scrap	N/A	N/A	N/A	2	3	0.1	Scrap Bin	None	
UXO2_03_T14-1-00009	UXO2_03_T14-1	4.1	9/25/2011	276845.70	3828871.60	Cultural Debris	Scrap	N/A	N/A	N/A	5	2	0.1	Scrap Bin	None	
UXO2_03_T14-1-00010	UXO2_03_T14-1	3.3	9/25/2011	276844.90	3828872.70	Cultural Debris	Scrap	N/A	N/A	N/A	1	3	0.1	Scrap Bin	None	
UXO2_03_T14-1-00011	UXO2_03_T14-1	3.2	9/25/2011	276842.90	3828875.40	Cultural Debris	Scrap	N/A	N/A	N/A	2	2	0.1	Scrap Bin	None	
UXO2_03_T14-1-00012	UXO2_03_T14-1	10.1	9/25/2011	276827.10	3828899.80	Cultural Debris	Scrap	N/A	N/A	N/A	3	3	0.2	Scrap Bin	None	
UXO2_03_T14-2-00001	UXO2_03_T14-2	4.8	9/26/2011	276917.20	3828785.10	Cultural Debris	Scrap	N/A	N/A	N/A	1	3	0.1	Scrap Bin	None	
UXO2_03_T14-2-00002	UXO2_03_T14-2	7.5	9/26/2011	276907.40	3828794.90	Cultural Debris	Scrap	N/A	N/A	N/A	1	0	2	Scrap Bin	None	
UXO2_03_T14-2-00003	UXO2_03_T14-2	28.2	9/25/2011	276880.10	3828831.20	Cultural Debris	Scrap	N/A	N/A	N/A	1	3	0.2	Scrap Bin	None	
UXO2_03_T14-2-00004	UXO2_03_T14-2	77.3	9/26/2011	276829.70	3828899.00	Cultural Debris	Scrap	N/A	N/A	N/A	8	3	0.5	Scrap Bin	None	
UXO2_03_T14-2-00005	UXO2_03_T14-2	99.2	9/26/2011	276829.20	3828899.60	Cultural Debris	Scrap	N/A	N/A	N/A	2	1	0.5	Scrap Bin	None	
UXO2_03_T15-1-00001	UXO2_03_T15-1	3.8	9/26/2011	276928.70	3828783.10	Cultural Debris	Scrap	N/A	N/A	N/A	5	5	0.1	Scrap Bin	None	
UXO2_03_T15-1-00002	UXO2_03_T15-1	3.3	9/25/2011	276893.00	3828828.60	Cultural Debris	Scrap	N/A	N/A	N/A	1	5	0.1	Scrap Bin	None	
UXO2_03_T15-1-00003	UXO2_03_T15-1	45.7	9/25/2011	276892.20	3828829.60	MPPEH	Flare	M127A1, Star Parachute	Empty	Unfuzed	1	1	0.25	Consolidation Point	Demil	Determined to be MDAS
UXO2_03_T15-1-00004	UXO2_03_T15-1	3.9	9/26/2011	276887.20	3828835.80	Cultural Debris	Scrap	N/A	N/A	N/A	1	2	0.1	Scrap Bin	None	
UXO2_03_T15-1-00005	UXO2_03_T15-1	3.6	9/25/2011	276882.30	3828842.20	Cultural Debris	Scrap	N/A	N/A	N/A	1	4	0.1	Scrap Bin	None	
UXO2_03_T15-1-00006	UXO2_03_T15-1	3.5	9/25/2011	276879.40	3828846.00	Cultural Debris	Scrap	N/A	N/A	N/A	3	6	0.1	Scrap Bin	None	
UXO2_03_T15-1-00007	UXO2_03_T15-1	3.2	9/26/2011	276878.60	3828847.00	Cultural Debris	Scrap	N/A	N/A	N/A	1	3	0.1	Scrap Bin	None	
UXO2_03_T15-1-00008	UXO2_03_T15-1	3.5	9/26/2011	276875.60	3828851.00	Cultural Debris	Scrap	N/A	N/A	N/A	1	2	0.1	Scrap Bin	None	
UXO2_03_T15-1-00009	UXO2_03_T15-1	3.1	9/26/2011	276863.30	3828868.30	Cultural Debris	Scrap	N/A	N/A	N/A	1	2	0.1	Scrap Bin	None	
UXO2_03_T15-1-00010	UXO2_03_T15-1	3.4	9/26/2011	276862.70	3828869.10	Cultural Debris	Scrap	N/A	N/A	N/A	2	3	0.1	Scrap Bin	None	
UXO2_03_T15-1-00011	UXO2_03_T15-1	3.5	9/26/2011	276858.40	3828874.90	Cultural Debris	Scrap	N/A	N/A	N/A	1	0	0.1	Scrap Bin	None	
UXO2_03_T15-2-00001	UXO2_03_T15-2	3.8	9/26/2011	276912.60	3828805.40	MPPEH	Flare	M127A1, Star Parachute	Empty	Unfuzed	1	0	0.2	Consolidation Point	Demil	Determined to be MDAS
UXO2_03_T15-2-00002	UXO2_03_T15-2	4.6	9/26/2011	276835.90	3828907.50	Cultural Debris	Scrap	N/A	N/A	N/A	5	6	0.2	Scrap Bin	None	
UXO2_03_T16-1-00001	UXO2_03_T16-1	3.4	9/26/2011	276942.30	3828782.50	Cultural Debris	Scrap	N/A	N/A	N/A	2	2	0.2	Scrap Bin	None	
UXO2_03_T16-1-00002	UXO2_03_T16-1	5.0	9/26/2011	276935.20	3828790.90	MPPEH	Thin walled frag	Smoke Grenade Piece (no nomenclature)	N/A	N/A	1	4	0.2	Consolidation Point	Demil	Determined to be MDAS
UXO2_03_T16-1-00003	UXO2_03_T16-1	28.5	9/26/2011	276932.70	3828793.80	No Contact	No Contact	N/A	N/A	N/A	0	0	0	Left in Place	None	
UXO2_03_T16-1-00004	UXO2_03_T16-1	3.4	9/26/2011	276880.00	3828860.50	Cultural Debris	Scrap	N/A	N/A	N/A	2	3	0.1	Scrap Bin	None	
UXO2_03_T16-1-00005	UXO2_03_T16-1	4.5	9/26/2011	276866.20	3828880.70	Cultural Debris	Scrap	N/A	N/A	N/A	5	5	0.1	Scrap Bin	None	
UXO2_03_T16-1-00006	UXO2_03_T16-1	3.1	9/26/2011	276863.90	3828885.20	Cultural Debris	Scrap	N/A	N/A	N/A	4	8	0.1	Scrap Bin	None	
UXO2_03_T16-1-00007	UXO2_03_T16-1	7.5	9/26/2011	276860.30	3828892.20	Cultural Debris	Scrap	N/A	N/A	N/A	1	6	0.2	Scrap Bin	None	
UXO2_03_T16-1-00008	UXO2_03_T16-1	11.0	9/26/2011	276845.60	3828905.40	Cultural Debris	Scrap	N/A	N/A	N/A	1	2	0.25	Scrap Bin	None	
UXO2_03_T16-1-00009	UXO2_03_T16-1	49.1	9/26/2011	276839.20	3828912.80	Cultural Debris	Scrap	N/A	N/A	N/A	1	0	0.1	Scrap Bin	None	
UXO2_03_T16-2-00001	UXO2_03_T16-2	3.2	9/26/2011	276919.70	3828814.10	Cultural Debris	Scrap	N/A	N/A	N/A	1	2	0.1	Scrap Bin	None	
UXO2_03_T16-2-00002	UXO2_03_T16-2	3.1	9/26/2011	276903.90	3828832.20	Cultural Debris	Scrap	N/A	N/A	N/A	1	3	0.1	Scrap Bin	None	
UXO2_03_T17-1-00001	UXO2_03_T17-1	3.1	9/26/2011	276887.70	3828868.90	Cultural Debris	Scrap	N/A	N/A	N/A	1	2	0.1	Scrap Bin	None	
UXO2_03_T17-1-00002	UXO2_03_T17-1	25.6	9/26/2011	276863.00	3828903.80	Cultural Debris	Scrap	N/A	N/A	N/A	2	4	0.25	Scrap Bin	None	
UXO2_03_T17-1-00003	UXO2_03_T17-1	6.8	9/26/2011	276862.20	3828904.80	Cultural Debris	Scrap	N/A	N/A	N/A	6	3	0.25	Scrap Bin	None	
UXO2_03_T17-1-00004	UXO2_03_T17-1	3.7	9/26/2011	276860.30	3828907.00	Cultural Debris	Scrap	N/A	N/A	N/A	10	3	0.2	Scrap Bin	None	
UXO2_03_T17-1-00005	UXO2_03_T17-1	24.3	9/26/2011	276847.30	3828921.00	Cultural Debris	Scrap	N/A	N/A	N/A	3	4	0.25	Scrap Bin	None	
UXO2_03_T17-2-00001	UXO2_03_T17-2	3.3	9/26/2011	276863.50	3828905.10	Cultural Debris	Scrap	N/A	N/A	N/A	1	2	0.1	Scrap Bin	None	
UXO2_03_T17-2-00002	UXO2_03_T17-2	3.1	9/26/2011	276861.20	3828907.80	Cultural Debris	Scrap	N/A	N/A	N/A	3	2	0.1	Scrap Bin	None	
UXO2_03_T18-1-00001	UXO2_03_T18-1	5.8	9/26/2011	276982.20	3828759.90	Cultural Debris	Scrap	N/A	N/A	N/A	1	5	0.25	Scrap Bin	None	
UXO2_03_T18-1-00002	UXO2_03_T18-1	3.9	9/26/2011	276979.30	3828763.70	Cultural Debris	Scrap	N/A	N/A	N/A	1	4	0.1	Scrap Bin	None	
UXO2_03_T18-1-00003	UXO2_03_T18-1	4.7	9/26/2011	276975.50	3828768.40	Cultural Debris	Scrap	N/A	N/A	N/A	1	10	0.2	Scrap Bin	None	
UXO2_03_T18-1-00004	UXO2_03_T18-1	7.2	9/26/2011	276970.60	3828774.70	Cultural Debris	Scrap	N/A	N/A	N/A	2	5	0.1	Scrap Bin	None	
UXO2_03_T18-1-00005	UXO2_03_T18-1	6.6	9/26/2011	276951.00	3828797.60	Cultural Debris	Scrap	N/A	N/A	N/A	1	4	0.2	Scrap Bin	None	
UXO2_03_T18-1-00006	UXO2_03_T18-1	3.3	9/26/2011	276854.50	3828925.30	Cultural Debris	Scrap	N/A	N/A	N/A	1	0	0.1	Scrap Bin	None	
UXO2_03_T18-1-00007	UXO2_03_T18-1	3.4	9/26/2011	276853.30	3828927.00	Cultural Debris	Scrap	N/A	N/A	N/A	1	8	0.1	Scrap Bin	None	
UXO2_03_T18-2-00001	UXO2_03_T18-2	3.1	9/26/2011	276983.50	3828760.10	Cultural Debris	Scrap	N/A	N/A	N/A	1	2	0.1	Scrap Bin	None	
UXO2_03_T18-2-00002	UXO2_03_T18-2	3.1	9/26/2011	276971.30	3828775.80	Cultural Debris	Scrap	N/A	N/A	N/A	1	3	0.1	Scrap Bin	None	
UXO2_03_T18-2-00003	UXO2_03_T18-2	3.0	9/26/2011	276892.10	3828880.90	Cultural Debris	Scrap	N/A	N/A	N/A	1	2	0.1	Scrap Bin	None	
UXO2_03_T18-2-00004	UXO2_03_T18-2	7.2	9/26/2011	276865.00	3828913.80	Cultural Debris	Scrap	N/A	N/A	N/A	3	6	0.2	Scrap Bin	None	
UXO2_03_T18-2-00005	UXO2_03_T18-2	5.6	9/26/2011	276854.70	3828927.50	Cultural Debris	Scrap	N/A	N/A	N/A	4	0	0.1	Scrap Bin	None	
UXO2_03_T19-1-00001	UXO2_03_T19-1	72.8	9/26/2011	277045.80	3828694.10	Facility Resource	Facility Resource	Road	N/A	N/A	0	4	0	Left in Place	None	Wire road mesh
UXO2_03_T19-1-00002	UXO2_03_T19-1	53.6	9/26/2011	277045.30	3828694.80	Cultural Debris	Scrap	N/A	N/A	N/A	1	2	0.3	Scrap Bin	None	
UXO2_03_T19-1-00003	UXO2_03_T19-1	58.4	9/26/2011	277043.00	3828697.70	MPPEH	Flare	M127A1, Star Parachute	Empty	Unfuzed	1	2	0.5	Consolidation Point	Demil	Determined to be MDAS
UXO2_03_T19-1-00004	UXO2_03_T19-1	13.5	9/26/2011	277040.30	3828701.20	Cultural Debris	Scrap	N/A	N/A	N/A	4	3	0.3	Scrap Bin	None	
UXO2_03_T19-1-00005	UXO2_03_T19-1	3.4	9/26/2011	277034.20	3828709.10	Cultural Debris	Scrap	N/A	N/A	N/A	4	4	0.2	Scrap Bin	None	
UXO2_03_T19-1-00006	UXO2_03_T19-1	6.0	9/26/2011	277032.50	3828711.40	Cultural Debris	Scrap	N/A	N/A	N/A	4	6	0.2	Scrap Bin	None	

TABLE H-1

MEC Intrusive Investigation Results

Site UXO-02

MCIEAST-MCB CAMLEJ, North Carolina

Anomaly Identification	Grid	Amplitude (millivolts)	Dig Date	Easting (UTM)	Northing (UTM)	Item Group	Item Class	Category	Filler	Fuze	Quantity	Depth (inch)	Weight (pound)	Action Taken	Demolition Required?	Item Comment
UXO2_03_T19-1-00007	UXO2_03_T19-1	13.7	9/26/2011	277031.70	3828712.70	Cultural Debris	Scrap	N/A	N/A	N/A	7	4	1	Scrap Bin	None	
UXO2_03_T19-1-00008	UXO2_03_T19-1	14.4	9/26/2011	277031.10	3828713.40	Cultural Debris	Scrap	N/A	N/A	N/A	3	1	1	Scrap Bin	None	
UXO2_03_T19-1-00009	UXO2_03_T19-1	3.1	9/26/2011	277029.80	3828715.30	Cultural Debris	Scrap	N/A	N/A	N/A	6	5	0.2	Scrap Bin	None	
UXO2_03_T19-1-00010	UXO2_03_T19-1	26.5	9/26/2011	277027.30	3828718.80	MPPEH	Thin walled frag	Smoke Grenade Piece (no nomenclature)	N/A	N/A	1	3	0.5	Consolidation Point	Demil	Determined to be MDAS
UXO2_03_T19-1-00011	UXO2_03_T19-1	3.1	9/26/2011	276905.70	3828878.40	Cultural Debris	Scrap	N/A	N/A	N/A	1	4	0.5	Scrap Bin	None	
UXO2_03_T19-1-00012	UXO2_03_T19-1	3.3	9/30/2011	276894.70	3828892.30	Cultural Debris	Scrap	N/A	N/A	N/A	1	2	0.1	Scrap Bin	None	
UXO2_03_T19-1-00013	UXO2_03_T19-1	19.0	9/26/2011	276888.30	3828900.50	Cultural Debris	Scrap	N/A	N/A	N/A	1	5	0.2	Scrap Bin	None	
UXO2_03_T19-1-00014	UXO2_03_T19-1	5.4	9/26/2011	276866.50	3828931.80	Cultural Debris	Scrap	N/A	N/A	N/A	2	2	0.1	Scrap Bin	None	
UXO2_03_T19-1-00015	UXO2_03_T19-1	850.0	9/26/2011	276865.70	3828932.80	Cultural Debris	Scrap	N/A	N/A	N/A	2	2	0.1	Scrap Bin	None	
UXO2_03_T19-2-00001	UXO2_03_T19-2	63.5	9/26/2011	277046.60	3828695.80	MPPEH	Thin walled frag	Smoke Grenade Piece (no nomenclature)	N/A	N/A	1	6	1	Consolidation Point	Demil	Determined to be MDAS
UXO2_03_T19-2-00002	UXO2_03_T19-2	29.2	9/26/2011	277045.60	3828697.00	Facility Resource	Facility Resource	Road	N/A	N/A	0	6	0	Left in Place	None	Wire road mesh
UXO2_03_T19-2-00003	UXO2_03_T19-2	3.2	9/26/2011	277041.10	3828702.50	MPPEH	Flare	M127A1, Star Parachute	Empty	Unfuzed	1	3	0.2	Consolidation Point	Demil	Determined to be MDAS
UXO2_03_T19-2-00004	UXO2_03_T19-2	103.8	9/26/2011	277033.50	3828711.90	Cultural Debris	Scrap	N/A	N/A	N/A	1	2	0.5	Scrap Bin	None	
UXO2_03_T19-2-00005	UXO2_03_T19-2	22.9	9/26/2011	277008.80	3828742.30	Cultural Debris	Scrap	N/A	N/A	N/A	6	1	1	Scrap Bin	None	
UXO2_03_T19-2-00006	UXO2_03_T19-2	142.4	9/26/2011	277007.90	3828743.50	Cultural Debris	Scrap	N/A	N/A	N/A	2	1	2	Scrap Bin	None	
UXO2_03_T19-2-00007	UXO2_03_T19-2	3.9	9/26/2011	276905.30	3828881.10	Cultural Debris	Scrap	N/A	N/A	N/A	1	3	0.2	Scrap Bin	None	
UXO2_03_T19-2-00008	UXO2_03_T19-2	3.7	9/26/2011	276898.80	3828889.20	Cultural Debris	Scrap	N/A	N/A	N/A	2	2	0.1	Scrap Bin	None	
UXO2_03_T19-2-00009	UXO2_03_T19-2	4.0	9/26/2011	276871.20	3828928.60	Cultural Debris	Scrap	N/A	N/A	N/A	4	3	0.25	Scrap Bin	None	
UXO2_03_T19-2-00010	UXO2_03_T19-2	4.2	9/26/2011	276867.70	3828932.60	Cultural Debris	Scrap	N/A	N/A	N/A	1	2	0.1	Scrap Bin	None	
UXO2_03_T19-2-00011	UXO2_03_T19-2	3.8	9/26/2011	276866.70	3828933.70	Cultural Debris	Scrap	N/A	N/A	N/A	3	4	0.1	Scrap Bin	None	
UXO2_03_T19-2-00012	UXO2_03_T19-2	6.7	9/26/2011	276865.60	3828934.90	Cultural Debris	Scrap	N/A	N/A	N/A	2	5	0.2	Scrap Bin	None	
UXO2_03_T19-2-00013	UXO2_03_T19-2	23.2	9/26/2011	276862.50	3828938.50	Cultural Debris	Scrap	N/A	N/A	N/A	1	0	0.2	Scrap Bin	None	
UXO2_03_T2-00001	UXO2_03_T2	25.9	9/25/2011	276759.70	3828773.60	Facility Resource	Facility Resource	Road	N/A	N/A	0	6	0	Left in Place	None	Wire road mesh
UXO2_03_T2-00002	UXO2_03_T2	10.5	9/25/2011	276757.50	3828778.80	Cultural Debris	Scrap	N/A	N/A	N/A	1	4	0.5	Scrap Bin	None	
UXO2_03_T20-1-00001	UXO2_03_T20-1	26.3	9/26/2011	277076.40	3828669.10	Facility Resource	Facility Resource	Road	N/A	N/A	0	3	0	Left in Place	None	Wire road mesh
UXO2_03_T20-1-00002	UXO2_03_T20-1	26.4	9/26/2011	277075.50	3828670.40	Cultural Debris	Scrap	N/A	N/A	N/A	1	4	1	Scrap Bin	None	
UXO2_03_T20-1-00003	UXO2_03_T20-1	4.1	9/26/2011	277071.10	3828676.80	Cultural Debris	Scrap	N/A	N/A	N/A	3	2	0.1	Scrap Bin	None	
UXO2_03_T20-1-00004	UXO2_03_T20-1	11.4	9/26/2011	277070.20	3828678.10	Cultural Debris	Scrap	N/A	N/A	N/A	2	3	0.15	Scrap Bin	None	
UXO2_03_T20-1-00005	UXO2_03_T20-1	115.5	9/26/2011	277065.00	3828686.10	Cultural Debris	Scrap	N/A	N/A	N/A	4	2	0.1	Scrap Bin	None	
UXO2_03_T20-1-00006	UXO2_03_T20-1	5.5	9/26/2011	277012.70	3828752.80	Cultural Debris	Scrap	N/A	N/A	N/A	3	2	0.1	Scrap Bin	None	
UXO2_03_T20-1-00007	UXO2_03_T20-1	6.8	9/26/2011	276979.20	3828796.10	Cultural Debris	Scrap	N/A	N/A	N/A	2	3	0.2	Scrap Bin	None	
UXO2_03_T20-1-00008	UXO2_03_T20-1	3.4	9/26/2011	276977.90	3828797.60	Cultural Debris	Scrap	N/A	N/A	N/A	1	2	0.1	Scrap Bin	None	
UXO2_03_T20-1-00009	UXO2_03_T20-1	3.1	9/26/2011	276920.40	3828876.30	Cultural Debris	Scrap	N/A	N/A	N/A	5	3	0.1	Scrap Bin	None	
UXO2_03_T20-1-00010	UXO2_03_T20-1	3.6	9/26/2011	276908.40	3828890.90	Cultural Debris	Scrap	N/A	N/A	N/A	2	3	0.2	Scrap Bin	None	
UXO2_03_T20-1-00011	UXO2_03_T20-1	4.8	9/26/2011	276886.30	3828919.60	Cultural Debris	Scrap	N/A	N/A	N/A	2	8	0.25	Scrap Bin	None	
UXO2_03_T20-1-00012	UXO2_03_T20-1	4.0	9/26/2011	276870.30	3828939.30	Cultural Debris	Scrap	N/A	N/A	N/A	3	2	0.1	Scrap Bin	None	
UXO2_03_T20-1-00013	UXO2_03_T20-1	13.5	9/26/2011	276868.50	3828941.50	Cultural Debris	Scrap	N/A	N/A	N/A	2	3	0.4	Scrap Bin	None	
UXO2_03_T20-1-00014	UXO2_03_T20-1	3.8	9/26/2011	276866.90	3828943.50	Cultural Debris	Scrap	N/A	N/A	N/A	3	4	0.1	Scrap Bin	None	
UXO2_03_T20-1-00015	UXO2_03_T20-1	111.7	9/26/2011	276865.70	3828945.10	Cultural Debris	Scrap	N/A	N/A	N/A	5	4	5.5	Scrap Bin	None	
UXO2_03_T20-2-00001	UXO2_03_T20-2	54.3	9/26/2011	277078.80	3828667.30	Cultural Debris	Scrap	N/A	N/A	N/A	3	3	0.2	Scrap Bin	None	
UXO2_03_T20-2-00002	UXO2_03_T20-2	8.0	9/26/2011	277078.00	3828668.50	Cultural Debris	Scrap	N/A	N/A	N/A	2	4	0.15	Scrap Bin	None	
UXO2_03_T20-2-00003	UXO2_03_T20-2	9.8	9/26/2011	277077.10	3828669.90	Cultural Debris	Scrap	N/A	N/A	N/A	2	3	0.2	Scrap Bin	None	
UXO2_03_T20-2-00004	UXO2_03_T20-2	4.3	9/26/2011	277072.10	3828677.60	Cultural Debris	Scrap	N/A	N/A	N/A	2	4	0.2	Scrap Bin	None	
UXO2_03_T20-2-00005	UXO2_03_T20-2	21.7	9/26/2011	276944.40	3828843.90	No Contact	No Contact	N/A	N/A	N/A	0	0	0	Left in Place	None	
UXO2_03_T20-2-00006	UXO2_03_T20-2	3.7	9/26/2011	276909.40	3828892.20	Cultural Debris	Scrap	N/A	N/A	N/A	2	3	0.1	Scrap Bin	None	
UXO2_03_T20-2-00007	UXO2_03_T20-2	56.8	9/26/2011	276890.80	3828916.50	QC	QC Seed	QC Seed	N/A	N/A	1	6	0.25	Consolidation Point	None	QC Seed #02
UXO2_03_T20-2-00008	UXO2_03_T20-2	6.8	9/26/2011	276885.50	3828923.00	Cultural Debris	Scrap	N/A	N/A	N/A	3	6	0.5	Scrap Bin	None	
UXO2_03_T20-2-00009	UXO2_03_T20-2	10.2	9/26/2011	276873.80	3828937.90	Cultural Debris	Scrap	N/A	N/A	N/A	5	4	0.2	Scrap Bin	None	
UXO2_03_T20-2-00010	UXO2_03_T20-2	10.7	9/26/2011	276870.90	3828941.70	Cultural Debris	Scrap	N/A	N/A	N/A	8	4	0.2	Scrap Bin	None	
UXO2_03_T2-1-00001	UXO2_03_T2-1	24.5	9/25/2011	276762.50	3828781.30	Facility Resource	Facility Resource	Road	N/A	N/A	0	6	0	Left in Place	None	Wire road mesh
UXO2_03_T2-1-00002	UXO2_03_T2-1	3.1	9/25/2011	276755.60	3828792.30	Cultural Debris	Scrap	N/A	N/A	N/A	1	5	0.1	Scrap Bin	None	
UXO2_03_T21-1-00001	UXO2_03_T21-1	15.6	9/26/2011	277102.00	3828654.20	Cultural Debris	Scrap	N/A	N/A	N/A	1	0	0.2	Scrap Bin	None	
UXO2_03_T21-1-00002	UXO2_03_T21-1	16.2	9/26/2011	277101.50	3828654.90	Cultural Debris	Scrap	N/A	N/A	N/A	1	5	0.2	Scrap Bin	None	
UXO2_03_T21-1-00003	UXO2_03_T21-1	2217.2	9/26/2011	277070.60	3828693.80	Cultural Debris	Scrap	N/A	N/A	N/A	2	0	0.25	Scrap Bin	None	
UXO2_03_T21-1-00004	UXO2_03_T21-1	40.9	9/26/2011	277028.40	3828748.70	Cultural Debris	Scrap	N/A	N/A	N/A	2	3	1	Scrap Bin	None	
UXO2_03_T21-1-00005	UXO2_03_T21-1	3.1	9/26/2011	276911.00	3828904.60	Cultural Debris	Scrap	N/A	N/A	N/A	1	1	0.1	Scrap Bin	None	
UXO2_03_T21-1-00006	UXO2_03_T21-1	3.3	9/26/2011	276908.10	3828908.60	No Contact	No Contact	N/A	N/A	N/A	0	0	0	Left in Place	None	
UXO2_03_T21-1-00007	UXO2_03_T21-1	134.5	9/26/2011	276905.50	3828912.20	Cultural Debris	Scrap	N/A	N/A	N/A	1	5	2	Scrap Bin	None	
UXO2_03_T21-1-00008	UXO2_03_T21-1	4.6	9/26/2011	276901.60	3828917.60	Cultural Debris	Scrap	N/A	N/A	N/A	1	6	0.2	Scrap Bin	None	
UXO2_03_T21-1-00009	UXO2_03_T21-1	5.3	9/26/2011	276890.10	3828932.10	Cultural Debris	Scrap	N/A	N/A	N/A	1	4	0.1	Scrap Bin	None	
UXO2_03_T21-1-00010	UXO2_03_T21-1	17.9	9/26/2011	276889.30	3828933.10	No Contact	No Contact	N/A	N/A	N/A	0	0	0	Left in Place	None	
UXO2_03_T21-1-00011	UXO2_03_T21-1	4.2	9/26/2011	276888.10	3828934.50	Cultural Debris	Scrap	N/A	N/A	N/A	3	6	0.2	Scrap Bin	None	
UXO2_03_T21-1-00012	UXO2_03_T21-1	15.7	9/26/2011	276886.70	3828936.20	Cultural Debris	Scrap	N/A	N/A	N/A	1	3	0.2	Scrap Bin	None	
UXO2_03_T21-1-00013	UXO2_03_T21-1	168.8	9/26/2011	276878.50	3828946.00	Cultural Debris	Scrap	N/A	N/A	N/A	1	1	0.1	Scrap Bin	None	
UXO2_03_T21-2-00001	UXO2_03_T21-2	3.8	9/26/2011	277102.20	3828655.90	Cultural Debris	Scrap	N/A	N/A	N/A	2	3	0.1	Scrap Bin	None	
UXO2_03_T21-2-00002	UXO2_03_T21-2	8.8	9/27/2011	277094.60	3828664.80	Cultural Debris	Scrap	N/A	N/A	N/A	1	5	1	Scrap Bin	None	
UXO2_03_T21-2-00003	UXO2_03_T21-2	300.2	9/26/2011	277071.10	3828694.90	Cultural Debris	Scrap	N/A	N/A	N/A	1	0	0.5	Scrap Bin	None	
UXO2_03_T21-2-00004	UXO2_03_T21-2	3.1	9/26/2011	276906.50	3828913.00	Cultural Debris	Scrap	N/A	N/A	N/A	2	6	0.1	Scrap Bin	None	
UXO2_03_T21-2-00005	UXO2_03_T21-2	3.4	9/26/2011	276893.30	3828930.20	Cultural Debris	Scrap	N/A	N/A	N/A	2	4	0.1	Scrap Bin	None	
UXO2_03_T21-2-00006	UXO2_03_T21-2	120.1	9/26/2011	276890.30	3828933.90	Cultural Debris	Scrap	N/A	N/A	N/A	2	0	0.2	Scrap Bin	None	
UXO2_03_T21-2-00007	UXO2_03_T21-2	11.0	9/30/2011	276887.40	3828937.40	Cultural Debris	Scrap	N/A	N/A	N/A	3	6	0.1	Scrap Bin	None	
UXO2_03_T2-2-00001	UXO2_03_T2-2	12.2	9/26/2011	276769.80	3828774.20	Cultural Debris	Scrap	N/A	N/A	N/A	1	2	0.2	Scrap Bin	None	
UXO2_03_T2-2-00002	UXO2_03_T2-2	4.6	9/26/2011	276769.20	3828775.20	Cultural Debris	Scrap	N/A	N/A	N/A	1	1	0.1	Scrap Bin	None	
UXO2_03_T2-2-00003	UXO2_03_T2-2	42.0	9/26/2011	276763.90	3828783.10	Cultural Debris	Scrap	N/A	N/A	N/A	3	3	0.5	Scrap Bin	None	
UXO2_03_T2-2-00004	UXO2_03_T2-2	25.5	9/26/2011	276759.90	3828789.10	Cultural Debris	Scrap	N/A	N/A	N/A	3	2	0.3	Scrap Bin	None	
UXO2_03_T22-1-00001	UXO2_03_T22-1	7.9	9/26/2011	277135.50	3828623.10	Cultural Debris	Scrap	N/A	N/A	N/A	4	4	0.1	Scrap Bin	None	
UXO2_03_T22-1-00002	UXO2_03_T22-1	4.0	9/26/2011	277134.40	3828624.60	Cultural Debris	Scrap	N/A	N/A	N/A	4	6	0.3	Scrap Bin	None	
UXO2_03_T22-1-00003	UXO2_03_T22-1	3.3	9/26/2011	277133.70	3828625.60	Cultural Debris	Scrap	N/A	N/A	N/A	1	4	0.2	Scrap Bin	None	
UXO2_03_T22-1-00004	UXO2_03_T22-1	3.1	9/26/2011	277108.70	3828659.40	Cultural Debris	Scrap	N/A	N/A	N/A	1	2	0.1	Scrap Bin	None	

TABLE H-1

MEC Intrusive Investigation Results

Site UXO-02

MCIEAST-MCB CAMLEJ, North Carolina

Anomaly Identification	Grid	Amplitude (millivolts)	Dig Date	Easting (UTM)	Northing (UTM)	Item Group	Item Class	Category	Filler	Fuze	Quantity	Depth (inch)	Weight (pound)	Action Taken	Demolition Required?	Item Comment
UXO2_03_T22-1-00005	UXO2_03_T22-1	3.1	9/26/2011	277066.60	3828714.10	Cultural Debris	Scrap	N/A	N/A	N/A	1	1	0.1	Scrap Bin	None	
UXO2_03_T22-1-00006	UXO2_03_T22-1	3.3	9/26/2011	277062.40	3828719.30	Cultural Debris	Scrap	N/A	N/A	N/A	1	1	0.1	Scrap Bin	None	
UXO2_03_T22-1-00007	UXO2_03_T22-1	40.0	9/26/2011	277029.90	3828763.50	Cultural Debris	Scrap	N/A	N/A	N/A	1	1	0.1	Scrap Bin	None	
UXO2_03_T22-1-00008	UXO2_03_T22-1	3.1	9/26/2011	276988.50	3828817.40	Cultural Debris	Scrap	N/A	N/A	N/A	1	1	0.1	Scrap Bin	None	
UXO2_03_T22-1-00009	UXO2_03_T22-1	3.1	9/26/2011	276965.00	3828849.40	Cultural Debris	Scrap	N/A	N/A	N/A	1	2	0.1	Scrap Bin	None	
UXO2_03_T22-1-00010	UXO2_03_T22-1	3.3	9/26/2011	276927.80	3828895.10	Cultural Debris	Scrap	N/A	N/A	N/A	2	3	0.2	Scrap Bin	None	
UXO2_03_T22-1-00011	UXO2_03_T22-1	6.3	9/26/2011	276916.70	3828910.40	Cultural Debris	Scrap	N/A	N/A	N/A	1	4	0.2	Scrap Bin	None	
UXO2_03_T22-1-00012	UXO2_03_T22-1	3.1	9/26/2011	276899.10	3828934.70	Cultural Debris	Scrap	N/A	N/A	N/A	3	3	0.25	Scrap Bin	None	
UXO2_03_T22-1-00013	UXO2_03_T22-1	31.5	9/26/2011	276898.00	3828936.10	Cultural Debris	Scrap	N/A	N/A	N/A	2	3	0.25	Scrap Bin	None	
UXO2_03_T22-1-00014	UXO2_03_T22-1	4.3	9/26/2011	276892.40	3828943.40	Facility Resource	Survey control point	N/A	N/A	N/A	0	0	0	Left in Place	None	
UXO2_03_T22-2-00001	UXO2_03_T22-2	121.6	9/26/2011	277103.40	3828668.30	Cultural Debris	Scrap	N/A	N/A	N/A	1	2	0.2	Scrap Bin	None	
UXO2_03_T22-2-00002	UXO2_03_T22-2	8.3	9/26/2011	277096.60	3828677.20	Cultural Debris	Scrap	N/A	N/A	N/A	1	4	2	Scrap Bin	None	
UXO2_03_T22-2-00003	UXO2_03_T22-2	56.3	9/26/2011	276911.50	3828921.00	Cultural Debris	Scrap	N/A	N/A	N/A	1	2	3	Scrap Bin	None	
UXO2_03_T23-1-00001	UXO2_03_T23-1	3.2	9/26/2011	277085.90	3828703.70	Cultural Debris	Scrap	N/A	N/A	N/A	1	2	0.1	Scrap Bin	None	
UXO2_03_T23-1-00002	UXO2_03_T23-1	3.3	9/26/2011	277084.60	3828704.90	Cultural Debris	Scrap	N/A	N/A	N/A	1	2	0.1	Scrap Bin	None	
UXO2_03_T23-1-00003	UXO2_03_T23-1	4.8	9/26/2011	276979.30	3828846.10	No Contact	No Contact	N/A	N/A	N/A	0	0	0	Left in Place	None	
UXO2_03_T23-1-00004	UXO2_03_T23-1	3.0	9/26/2011	276945.90	3828890.60	Cultural Debris	Scrap	N/A	N/A	N/A	1	4	1	Scrap Bin	None	
UXO2_03_T23-1-00005	UXO2_03_T23-1	27.9	9/26/2011	276929.40	3828917.60	Cultural Debris	Scrap	N/A	N/A	N/A	1	1	0.25	Scrap Bin	None	
UXO2_03_T23-1-00006	UXO2_03_T23-1	3.8	9/26/2011	276915.90	3828929.40	Cultural Debris	Scrap	N/A	N/A	N/A	1	3	0.1	Scrap Bin	None	
UXO2_03_T23-1-00007	UXO2_03_T23-1	15.0	9/26/2011	276913.10	3828932.70	Cultural Debris	Scrap	N/A	N/A	N/A	1	1	0.3	Scrap Bin	None	
UXO2_03_T23-1-00008	UXO2_03_T23-1	4.7	9/26/2011	276912.50	3828933.70	Cultural Debris	Scrap	N/A	N/A	N/A	1	7	0.2	Scrap Bin	None	Nail
UXO2_03_T23-1-00009	UXO2_03_T23-1	5.7	9/27/2011	276908.20	3828939.80	Cultural Debris	Scrap	N/A	N/A	N/A	2	4	0.1	Scrap Bin	None	Wire
UXO2_03_T23-1-00010	UXO2_03_T23-1	3.3	9/27/2011	276905.50	3828943.70	Cultural Debris	Scrap	N/A	N/A	N/A	1	0	0.1	Scrap Bin	None	
UXO2_03_T23-2-00001	UXO2_03_T23-2	4.5	9/26/2011	277152.40	3828623.20	Cultural Debris	Scrap	N/A	N/A	N/A	1	6	0.15	Scrap Bin	None	
UXO2_03_T23-2-00002	UXO2_03_T23-2	8.7	9/26/2011	277140.60	3828638.60	Cultural Debris	Scrap	N/A	N/A	N/A	1	2	2	Scrap Bin	None	
UXO2_03_T23-2-00003	UXO2_03_T23-2	37.1	9/26/2011	277033.30	3828774.00	Cultural Debris	Scrap	N/A	N/A	N/A	1	0	0.125	Scrap Bin	None	Survey nail
UXO2_03_T23-2-00004	UXO2_03_T23-2	3.1	9/26/2011	276970.10	3828864.80	No Contact	No Contact	N/A	N/A	N/A	0	0	0	Left in Place	None	
UXO2_03_T23-2-00005	UXO2_03_T23-2	3.7	9/26/2011	276956.40	3828878.80	Cultural Debris	Scrap	N/A	N/A	N/A	1	6	0.1	Scrap Bin	None	
UXO2_03_T23-2-00006	UXO2_03_T23-2	8.5	9/26/2011	276913.90	3828933.60	Cultural Debris	Scrap	N/A	N/A	N/A	1	2	0.2	Scrap Bin	None	
UXO2_03_T23-2-00007	UXO2_03_T23-2	5.4	9/30/2011	276911.00	3828937.80	Cultural Debris	Scrap	N/A	N/A	N/A	1	6	0.1	Scrap Bin	None	Wire
UXO2_03_T23-2-00008	UXO2_03_T23-2	52.8	9/30/2011	276910.00	3828939.30	Facility Resource	Survey control point	Utility	N/A	N/A	0	0	0	Left in Place	None	Temp control point
UXO2_03_T24-1-00001	UXO2_03_T24-1	20.9	9/30/2011	277184.40	3828594.70	Cultural Debris	Scrap	N/A	N/A	N/A	1	6	0.5	Scrap Bin	None	
UXO2_03_T24-1-00002	UXO2_03_T24-1	49.8	9/30/2011	277174.40	3828607.00	Cultural Debris	Scrap	N/A	N/A	N/A	3	0	0.5	Scrap Bin	None	Wire
UXO2_03_T24-1-00003	UXO2_03_T24-1	28.0	9/30/2011	277053.60	3828765.60	Cultural Debris	Scrap	N/A	N/A	N/A	1	1	0.1	Scrap Bin	None	Nail
UXO2_03_T24-1-00004	UXO2_03_T24-1	8.9	9/30/2011	276948.20	3828905.30	No Contact	No Contact	N/A	N/A	N/A	0	0	0	Left in Place	None	
UXO2_03_T24-1-00005	UXO2_03_T24-1	3.1	9/30/2011	276934.00	3828924.70	Cultural Debris	Scrap	N/A	N/A	N/A	1	6	1	Scrap Bin	None	Wire
UXO2_03_T24-1-00006	UXO2_03_T24-1	3.3	9/30/2011	276921.00	3828939.90	Cultural Debris	Scrap	N/A	N/A	N/A	1	4	0.25	Scrap Bin	None	
UXO2_03_T24-2-00001	UXO2_03_T24-2	50.3	9/30/2011	277186.20	3828594.40	Cultural Debris	Scrap	N/A	N/A	N/A	1	6	1	Scrap Bin	None	
UXO2_03_T24-2-00002	UXO2_03_T24-2	3.0	9/30/2011	277177.60	3828605.40	Cultural Debris	Scrap	N/A	N/A	N/A	1	4	0.25	Scrap Bin	None	
UXO2_03_T24-2-00003	UXO2_03_T24-2	6.4	9/30/2011	277105.10	3828700.10	No Contact	No Contact	N/A	N/A	N/A	0	0	0	Left in Place	None	
UXO2_03_T24-2-00004	UXO2_03_T24-2	3.5	9/30/2011	276953.30	3828900.80	Cultural Debris	Scrap	N/A	N/A	N/A	1	6	1	Scrap Bin	None	
UXO2_03_T24-2-00005	UXO2_03_T24-2	471.8	9/30/2011	276948.90	3828906.90	Cultural Debris	Scrap	N/A	N/A	N/A	1	4	0.25	Scrap Bin	None	Wire
UXO2_03_T25-1-00001	UXO2_03_T25-1	22.5	9/27/2011	277199.60	3828590.30	Cultural Debris	Scrap	N/A	N/A	N/A	1	4	0.2	Scrap Bin	None	
UXO2_03_T25-1-00002	UXO2_03_T25-1	4.4	9/27/2011	277197.20	3828593.30	Cultural Debris	Scrap	N/A	N/A	N/A	1	4	0.1	Scrap Bin	None	Alum can
UXO2_03_T25-1-00003	UXO2_03_T25-1	8.3	9/27/2011	277196.40	3828594.30	Cultural Debris	Scrap	N/A	N/A	N/A	2	4	0.1	Scrap Bin	None	Nail
UXO2_03_T25-1-00004	UXO2_03_T25-1	54.8	9/27/2011	277195.20	3828595.70	Cultural Debris	Scrap	N/A	N/A	N/A	1	1	0.1	Scrap Bin	None	Wire
UXO2_03_T25-1-00005	UXO2_03_T25-1	147.6	9/27/2011	277193.00	3828598.50	Cultural Debris	Scrap	N/A	N/A	N/A	1	10	15	Scrap Bin	None	Wire
UXO2_03_T25-1-00006	UXO2_03_T25-1	3.1	9/27/2011	277162.40	3828639.20	Cultural Debris	Scrap	N/A	N/A	N/A	1	4	0.1	Scrap Bin	None	
UXO2_03_T25-1-00007	UXO2_03_T25-1	3.5	9/27/2011	277132.30	3828678.60	Cultural Debris	Scrap	N/A	N/A	N/A	1	4	0.1	Scrap Bin	None	
UXO2_03_T25-1-00008	UXO2_03_T25-1	3.1	9/27/2011	277098.60	3828723.80	Cultural Debris	Scrap	N/A	N/A	N/A	1	6	0.1	Scrap Bin	None	
UXO2_03_T25-1-00009	UXO2_03_T25-1	5.2	9/27/2011	277095.40	3828728.00	Cultural Debris	Scrap	N/A	N/A	N/A	1	3	0.1	Scrap Bin	None	
UXO2_03_T25-1-00010	UXO2_03_T25-1	4.3	9/27/2011	277040.50	3828799.60	Cultural Debris	Scrap	N/A	N/A	N/A	1	6	0.1	Scrap Bin	None	Nail
UXO2_03_T25-1-00011	UXO2_03_T25-1	5.4	9/27/2011	276986.60	3828870.00	Cultural Debris	Scrap	N/A	N/A	N/A	1	4	0.1	Scrap Bin	None	
UXO2_03_T25-1-00012	UXO2_03_T25-1	5.1	9/27/2011	276967.00	3828895.00	Cultural Debris	Scrap	N/A	N/A	N/A	1	6	0.1	Scrap Bin	None	
UXO2_03_T25-1-00013	UXO2_03_T25-1	3.6	9/27/2011	276950.60	3828917.70	Cultural Debris	Scrap	N/A	N/A	N/A	1	4	0.1	Scrap Bin	None	
UXO2_03_T25-1-00014	UXO2_03_T25-1	3.1	9/27/2011	276940.00	3828934.40	Cultural Debris	Scrap	N/A	N/A	N/A	1	1	0.1	Scrap Bin	None	Nail
UXO2_03_T25-1-00015	UXO2_03_T25-1	21.7	9/27/2011	276937.90	3828937.80	Cultural Debris	Scrap	N/A	N/A	N/A	1	1	0.1	Scrap Bin	None	
UXO2_03_T25-2-00001	UXO2_03_T25-2	50.5	9/30/2011	277201.00	3828590.10	Cultural Debris	Scrap	N/A	N/A	N/A	1	6	0.25	Scrap Bin	None	Wire
UXO2_03_T25-2-00002	UXO2_03_T25-2	4.8	9/30/2011	277193.50	3828600.00	Cultural Debris	Scrap	N/A	N/A	N/A	2	6	0.5	Scrap Bin	None	
UXO2_03_T25-2-00003	UXO2_03_T25-2	22.1	9/30/2011	277191.10	3828603.20	QC	QC Seed	QC Seed	N/A	N/A	1	6	0.25	Consolidation Point	None	QC Seed #03
UXO2_03_T26-1-00001	UXO2_03_T26-1	40.4	9/30/2011	277212.30	3828589.30	Cultural Debris	Scrap	N/A	N/A	N/A	1	6	0.5	Scrap Bin	None	
UXO2_03_T26-1-00002	UXO2_03_T26-1	4.5	9/30/2011	277210.70	3828591.60	Cultural Debris	Scrap	N/A	N/A	N/A	1	6	0.5	Scrap Bin	None	
UXO2_03_T26-1-00003	UXO2_03_T26-1	3.6	9/30/2011	277164.00	3828654.80	Cultural Debris	Scrap	N/A	N/A	N/A	1	3	0.1	Scrap Bin	None	
UXO2_03_T26-1-00004	UXO2_03_T26-1	5.0	9/30/2011	277119.90	3828712.20	Cultural Debris	Scrap	N/A	N/A	N/A	1	6	0.1	Scrap Bin	None	Alum foil
UXO2_03_T26-1-00005	UXO2_03_T26-1	3.6	9/30/2011	277115.00	3828718.90	Cultural Debris	Scrap	N/A	N/A	N/A	1	1	0.1	Scrap Bin	None	
UXO2_03_T26-1-00006	UXO2_03_T26-1	3.1	9/30/2011	277041.40	3828815.10	Cultural Debris	Scrap	N/A	N/A	N/A	1	2	0.1	Scrap Bin	None	
UXO2_03_T26-1-00007	UXO2_03_T26-1	3.2	9/30/2011	277038.60	3828818.60	Cultural Debris	Scrap	N/A	N/A	N/A	1	2	0.1	Scrap Bin	None	Nail
UXO2_03_T26-1-00008	UXO2_03_T26-1	4.6	9/30/2011	276992.80	3828880.40	Cultural Debris	Scrap	N/A	N/A	N/A	1	3	0.1	Scrap Bin	None	
UXO2_03_T26-1-00009	UXO2_03_T26-1	5.5	9/30/2011	276989.20	3828884.80	Cultural Debris	Scrap	N/A	N/A	N/A	2	3	0.1	Scrap Bin	None	
UXO2_03_T26-2-00001	UXO2_03_T26-2	3.7	9/30/2011	277213.90	3828588.80	Cultural Debris	Scrap	N/A	N/A	N/A	3	8	0.1	Scrap Bin	None	Nail
UXO2_03_T26-2-00002	UXO2_03_T26-2	11.0	9/30/2011	277213.10	3828590.10	Cultural Debris	Scrap	N/A	N/A	N/A	1	6	0.1	Scrap Bin	None	Wire
UXO2_03_T26-2-00003	UXO2_03_T26-2	3.3	9/30/2011	277184.90	3828631.00	Cultural Debris	Scrap	N/A	N/A	N/A	1	6	0.1	Scrap Bin	None	
UXO2_03_T26-2-00004	UXO2_03_T26-2	9.7	9/30/2011	277004.70	3828866.00	Cultural Debris	Scrap	N/A	N/A	N/A	1	2	1	Scrap Bin	None	
UXO2_03_T26-2-00005	UXO2_03_T26-2	42.6	9/30/2011	276955.50	3828930.10	Cultural Debris	Scrap	N/A	N/A	N/A	1	6	0.25	Scrap Bin	None	
UXO2_03_T26-2-00006	UXO2_03_T26-2	30.2	9/30/2011	276953.00	3828933.40	Cultural Debris	Scrap	N/A	N/A	N/A	1	0	0.2	Scrap Bin	None	Wire
UXO2_03_T27-1-00001	UXO2_03_T27-1	6.0	9/30/2011	277227.80	3828590.00	Cultural Debris	Scrap	N/A	N/A	N/A	1	3	0.25	Scrap Bin	None	Alum can and wire
UXO2_03_T27-1-00002	UXO2_03_T27-1	5.5	9/28/2011	277212.80	3828606.70	Cultural Debris	Scrap	N/A	N/A	N/A	1	2	0.1	Scrap Bin	None	
UXO2_03_T27-1-00003	UXO2_03_T27-1	3.5	9/28/2011	277192.40	3828635.80	Cultural Debris	Scrap	N/A	N/A	N/A	2	1	0.1	Scrap Bin	None	
UXO2_03_T27-1-00004	UXO2_03_T27-1	3.4	9/28/2011	277171.50	3828658.90	Cultural Debris	Scrap	N/A	N/A	N/A	1	2	0.1	Scrap Bin	None	Bolt

TABLE H-1

MEC Intrusive Investigation Results

Site UXO-02

MCIEAST-MCB CAMLEJ, North Carolina

Anomaly Identification	Grid	Amplitude (millivolts)	Dig Date	Easting (UTM)	Northing (UTM)	Item Group	Item Class	Category	Filler	Fuze	Quantity	Depth (inch)	Weight (pound)	Action Taken	Demolition Required?	Item Comment
UXO2_03_T27-1-00005	UXO2_03_T27-1	3.2	9/28/2011	277170.30	3828662.70	Cultural Debris	Scrap	N/A	N/A	N/A	1	3	0.25	Scrap Bin	None	Wire
UXO2_03_T27-1-00006	UXO2_03_T27-1	3.3	9/28/2011	277152.30	3828685.30	Cultural Debris	Scrap	N/A	N/A	N/A	1	6	0.1	Scrap Bin	None	
UXO2_03_T27-1-00007	UXO2_03_T27-1	3.5	9/28/2011	277125.90	3828720.40	Cultural Debris	Scrap	N/A	N/A	N/A	1	6	0.25	Scrap Bin	None	
UXO2_03_T27-1-00008	UXO2_03_T27-1	7.9	9/28/2011	277088.70	3828768.30	Cultural Debris	Scrap	N/A	N/A	N/A	1	4	5	Scrap Bin	None	Alum foil
UXO2_03_T27-1-00009	UXO2_03_T27-1	3.1	9/28/2011	277068.20	3828791.70	Cultural Debris	Scrap	N/A	N/A	N/A	1	1	0.1	Scrap Bin	None	Nail
UXO2_03_T27-1-00010	UXO2_03_T27-1	3.5	9/28/2011	277058.10	3828807.10	Cultural Debris	Scrap	N/A	N/A	N/A	2	1	0.1	Scrap Bin	None	Wire
UXO2_03_T27-1-00011	UXO2_03_T27-1	3.8	9/28/2011	277054.00	3828813.60	Cultural Debris	Scrap	N/A	N/A	N/A	4	2	0.1	Scrap Bin	None	Nail
UXO2_03_T27-1-00012	UXO2_03_T27-1	4.6	9/28/2011	277034.90	3828841.70	Cultural Debris	Scrap	N/A	N/A	N/A	2	1	0.1	Scrap Bin	None	Wire
UXO2_03_T27-1-00013	UXO2_03_T27-1	3.7	9/28/2011	277028.00	3828851.00	Cultural Debris	Scrap	N/A	N/A	N/A	1	2	0.1	Scrap Bin	None	
UXO2_03_T27-1-00014	UXO2_03_T27-1	38.7	9/28/2011	277013.90	3828867.70	Cultural Debris	Scrap	N/A	N/A	N/A	3	6	5	Scrap Bin	None	
UXO2_03_T27-1-00015	UXO2_03_T27-1	3.8	9/28/2011	277009.20	3828873.50	Cultural Debris	Scrap	N/A	N/A	N/A	1	3	0.1	Scrap Bin	None	
UXO2_03_T27-1-00016	UXO2_03_T27-1	6.8	9/28/2011	276995.30	3828892.90	Cultural Debris	Scrap	N/A	N/A	N/A	1	6	0.5	Scrap Bin	None	
UXO2_03_T27-1-00017	UXO2_03_T27-1	43.2	9/28/2011	276986.00	3828904.70	Cultural Debris	Scrap	N/A	N/A	N/A	1	6	1	Scrap Bin	None	Nail
UXO2_03_T27-1-00018	UXO2_03_T27-1	3.1	9/28/2011	276977.40	3828916.80	Cultural Debris	Scrap	N/A	N/A	N/A	1	1	0.1	Scrap Bin	None	Wire
UXO2_03_T27-1-00019	UXO2_03_T27-1	76.3	9/27/2011	276971.00	3828924.10	Cultural Debris	Scrap	N/A	N/A	N/A	1	2	0.5	Scrap Bin	None	Wire
UXO2_03_T27-1-00020	UXO2_03_T27-1	4.1	9/27/2011	276960.50	3828937.30	Cultural Debris	Scrap	N/A	N/A	N/A	1	3	0.1	Scrap Bin	None	Wire
UXO2_03_T27-1-00021	UXO2_03_T27-1	5.8	9/27/2011	276959.30	3828938.80	Cultural Debris	Scrap	N/A	N/A	N/A	1	2	0.1	Scrap Bin	None	Wire mesh
UXO2_03_T27-2-00001	UXO2_03_T27-2	30.4	9/28/2011	277229.00	3828590.40	Cultural Debris	Scrap	N/A	N/A	N/A	1	3	0.25	Scrap Bin	None	
UXO2_03_T27-2-00002	UXO2_03_T27-2	3.1	9/28/2011	277222.50	3828597.20	Cultural Debris	Scrap	N/A	N/A	N/A	1	6	0.25	Scrap Bin	None	Wire
UXO2_03_T27-2-00003	UXO2_03_T27-2	3.2	9/28/2011	277191.30	3828638.90	Cultural Debris	Scrap	N/A	N/A	N/A	1	3	0.1	Scrap Bin	None	
UXO2_03_T27-2-00004	UXO2_03_T27-2	40.0	9/28/2011	277172.10	3828661.10	MPPEH	Grenade	M18 Smoke, Hand	Empty	Unfuzed	1	3	0.25	Consolidation Point	Demil	Determined to be MDAS
UXO2_03_T27-2-00005	UXO2_03_T27-2	42.9	9/28/2011	277111.20	3828743.50	Cultural Debris	Scrap	N/A	N/A	N/A	1	8	1	Scrap Bin	None	Nail
UXO2_03_T27-2-00006	UXO2_03_T27-2	19.5	9/28/2011	277082.20	3828776.90	Cultural Debris	Scrap	N/A	N/A	N/A	1	1	0.1	Scrap Bin	None	Wire
UXO2_03_T27-2-00007	UXO2_03_T27-2	3.5	9/28/2011	277016.50	3828867.00	Cultural Debris	Scrap	N/A	N/A	N/A	1	0	0.1	Scrap Bin	None	Wire
UXO2_03_T27-2-00008	UXO2_03_T27-2	7.7	9/27/2011	276972.00	3828925.10	Cultural Debris	Scrap	N/A	N/A	N/A	1	2	0.5	Scrap Bin	None	Nail
UXO2_03_T27-2-00009	UXO2_03_T27-2	29.7	9/27/2011	276963.30	3828935.70	Cultural Debris	Scrap	N/A	N/A	N/A	1	1	0.1	Scrap Bin	None	Banding (non-munitions related)
UXO2_03_T28-1-00001	UXO2_03_T28-1	21.7	9/28/2011	277239.30	3828590.90	Cultural Debris	Scrap	N/A	N/A	N/A	1	3	0.1	Scrap Bin	None	Pipe
UXO2_03_T28-1-00002	UXO2_03_T28-1	4.1	9/28/2011	277233.30	3828597.00	Cultural Debris	Scrap	N/A	N/A	N/A	1	6	5	Scrap Bin	None	
UXO2_03_T28-1-00003	UXO2_03_T28-1	5.8	9/28/2011	277221.60	3828610.70	Cultural Debris	Scrap	N/A	N/A	N/A	3	6	0.1	Scrap Bin	None	
UXO2_03_T28-1-00004	UXO2_03_T28-1	15.5	9/28/2011	277220.80	3828611.80	MPPEH	Grenade	M18 Smoke, Hand	Empty	Unfuzed	1	3	0.25	Consolidation Point	Demil	Determined to be MDAS
UXO2_03_T28-1-00005	UXO2_03_T28-1	3.0	9/28/2011	277209.70	3828627.10	Cultural Debris	Scrap	N/A	N/A	N/A	1	6	0.1	Scrap Bin	None	
UXO2_03_T28-1-00006	UXO2_03_T28-1	4.8	9/28/2011	277201.80	3828636.80	Cultural Debris	Scrap	N/A	N/A	N/A	1	6	0.1	Scrap Bin	None	Nail
UXO2_03_T28-1-00007	UXO2_03_T28-1	4.2	9/28/2011	277105.60	3828763.40	Cultural Debris	Scrap	N/A	N/A	N/A	2	3	0.1	Scrap Bin	None	Wire
UXO2_03_T28-1-00008	UXO2_03_T28-1	4.6	9/28/2011	277090.50	3828785.10	Cultural Debris	Scrap	N/A	N/A	N/A	3	6	0.1	Scrap Bin	None	Wire
UXO2_03_T28-1-00009	UXO2_03_T28-1	3.9	9/28/2011	277089.40	3828786.40	Cultural Debris	Scrap	N/A	N/A	N/A	2	6	0.1	Scrap Bin	None	Wire
UXO2_03_T28-1-00010	UXO2_03_T28-1	3.5	9/28/2011	277088.70	3828787.20	Cultural Debris	Scrap	N/A	N/A	N/A	3	6	0.1	Scrap Bin	None	
UXO2_03_T28-1-00011	UXO2_03_T28-1	3.0	9/28/2011	277041.90	3828847.60	Cultural Debris	Scrap	N/A	N/A	N/A	1	3	0.1	Scrap Bin	None	Nail
UXO2_03_T28-1-00012	UXO2_03_T28-1	3.7	9/28/2011	277035.20	3828855.10	Cultural Debris	Scrap	N/A	N/A	N/A	1	1	0.1	Scrap Bin	None	
UXO2_03_T28-1-00013	UXO2_03_T28-1	9.5	9/28/2011	276993.50	3828912.10	Cultural Debris	Scrap	N/A	N/A	N/A	1	6	0.25	Scrap Bin	None	Nail
UXO2_03_T28-1-00014	UXO2_03_T28-1	43.8	9/28/2011	276979.20	3828930.10	Cultural Debris	Scrap	N/A	N/A	N/A	1	6	0.1	Scrap Bin	None	Wire
UXO2_03_T28-1-00015	UXO2_03_T28-1	4.8	9/28/2011	276973.50	3828937.10	Cultural Debris	Scrap	N/A	N/A	N/A	1	4	0.1	Scrap Bin	None	
UXO2_03_T28-2-00001	UXO2_03_T28-2	19.5	9/30/2011	277240.40	3828591.10	Facility Resource	Facility Resource	Road	N/A	N/A	0	3	0	Left in Place	None	Wire road mesh
UXO2_03_T28-2-00002	UXO2_03_T28-2	6.3	9/30/2011	277234.00	3828597.50	Shared	Shared Target	Shared	N/A	N/A	0	0	0	Left in Place	None	Shared w/T28-2-00002
UXO2_03_T28-2-00003	UXO2_03_T28-2	28.5	9/30/2011	277233.20	3828598.30	Cultural Debris	Scrap	N/A	N/A	N/A	1	3	2	Scrap Bin	None	Pipe
UXO2_03_T28-2-00004	UXO2_03_T28-2	14.1	9/30/2011	277078.10	3828802.00	Cultural Debris	Scrap	N/A	N/A	N/A	1	6	2.5	Scrap Bin	None	
UXO2_03_T29-1-00001	UXO2_03_T29-1	42.5	9/30/2011	277248.70	3828592.10	Facility Resource	Facility Resource	Road	N/A	N/A	0	3	0	Left in Place	None	Wire road mesh
UXO2_03_T29-1-00002	UXO2_03_T29-1	4.0	9/28/2011	277244.90	3828597.60	Cultural Debris	Scrap	N/A	N/A	N/A	1	5	0.2	Scrap Bin	None	Nail
UXO2_03_T29-1-00003	UXO2_03_T29-1	3.0	9/28/2011	277216.40	3828636.90	Cultural Debris	Scrap	N/A	N/A	N/A	1	6	0.1	Scrap Bin	None	
UXO2_03_T29-1-00004	UXO2_03_T29-1	69.4	9/28/2011	277204.00	3828652.90	Cultural Debris	Scrap	N/A	N/A	N/A	2	6	0.5	Scrap Bin	None	Nail
UXO2_03_T29-1-00005	UXO2_03_T29-1	3.6	9/28/2011	277158.20	3828715.70	Cultural Debris	Scrap	N/A	N/A	N/A	1	6	0.1	Scrap Bin	None	Nail
UXO2_03_T29-1-00006	UXO2_03_T29-1	11.9	9/28/2011	277103.50	3828786.00	Cultural Debris	Scrap	N/A	N/A	N/A	1	1	0.1	Scrap Bin	None	Nail
UXO2_03_T29-1-00007	UXO2_03_T29-1	3.6	9/28/2011	277097.80	3828794.30	Cultural Debris	Scrap	N/A	N/A	N/A	1	2	0.1	Scrap Bin	None	Bolt and nails
UXO2_03_T29-1-00008	UXO2_03_T29-1	3.7	9/28/2011	277078.80	3828817.00	Cultural Debris	Scrap	N/A	N/A	N/A	3	6	0.25	Scrap Bin	None	
UXO2_03_T29-1-00009	UXO2_03_T29-1	4.0	9/28/2011	277070.80	3828829.80	Cultural Debris	Scrap	N/A	N/A	N/A	1	3	0.1	Scrap Bin	None	Nail
UXO2_03_T29-1-00010	UXO2_03_T29-1	4.4	9/28/2011	277043.10	3828859.70	Cultural Debris	Scrap	N/A	N/A	N/A	1	3	0.1	Scrap Bin	None	Nail
UXO2_03_T29-1-00011	UXO2_03_T29-1	4.5	9/28/2011	277022.70	3828886.80	Cultural Debris	Scrap	N/A	N/A	N/A	1	6	0.1	Scrap Bin	None	
UXO2_03_T29-1-00012	UXO2_03_T29-1	3.1	9/28/2011	277006.00	3828909.70	Cultural Debris	Scrap	N/A	N/A	N/A	1	3	0.1	Scrap Bin	None	Nail
UXO2_03_T29-1-00013	UXO2_03_T29-1	99.1	9/28/2011	276993.40	3828927.00	Cultural Debris	Scrap	N/A	N/A	N/A	2	3	2	Scrap Bin	None	Nail
UXO2_03_T29-1-00014	UXO2_03_T29-1	4.0	9/28/2011	276986.80	3828935.90	Cultural Debris	Scrap	N/A	N/A	N/A	1	3	0.1	Scrap Bin	None	
UXO2_03_T29-2-00001	UXO2_03_T29-2	8.3	9/30/2011	277250.40	3828591.40	Cultural Debris	Scrap	N/A	N/A	N/A	3	2	0.2	Scrap Bin	None	Wire
UXO2_03_T29-2-00002	UXO2_03_T29-2	9.9	9/30/2011	277098.10	3828796.50	Cultural Debris	Scrap	N/A	N/A	N/A	3	2	0.2	Scrap Bin	None	
UXO2_03_T29-2-00003	UXO2_03_T29-2	4.8	9/30/2011	277077.00	3828822.50	Cultural Debris	Scrap	N/A	N/A	N/A	2	3	0.1	Scrap Bin	None	Nail
UXO2_03_T29-2-00004	UXO2_03_T29-2	3.3	9/30/2011	276992.90	3828929.90	RRD	Ammo Can	N/A	Empty	N/A	1	3	1	Consolidation Point	Demil	
UXO2_03_T29-2-00005	UXO2_03_T29-2	4.7	9/30/2011	276991.80	3828931.40	Cultural Debris	Scrap	N/A	N/A	N/A	1	2	0.25	Scrap Bin	None	
UXO2_03_T30-1-00001	UXO2_03_T30-1	21.0	9/30/2011	277262.60	3828592.90	Cultural Debris	Scrap	N/A	N/A	N/A	1	2	0.5	Scrap Bin	None	
UXO2_03_T30-1-00002	UXO2_03_T30-1	3.1	9/30/2011	277255.60	3828600.80	Cultural Debris	Scrap	N/A	N/A	N/A	1	3	0.2	Scrap Bin	None	
UXO2_03_T30-1-00003	UXO2_03_T30-1	3.9	9/30/2011	277253.90	3828602.80	Cultural Debris	Scrap	N/A	N/A	N/A	1	3	0.1	Scrap Bin	None	Wire
UXO2_03_T30-1-00004	UXO2_03_T30-1	3.2	9/30/2011	277196.00	3828682.10	Cultural Debris	Scrap	N/A	N/A	N/A	1	3	0.1	Scrap Bin	None	Nail
UXO2_03_T30-1-00005	UXO2_03_T30-1	4.4	9/30/2011	277189.70	3828688.20	Cultural Debris	Scrap	N/A	N/A	N/A	1	3	0.1	Scrap Bin	None	
UXO2_03_T30-1-00006	UXO2_03_T30-1	4.2	9/30/2011	277025.10	3828902.90	Cultural Debris	Scrap	N/A	N/A	N/A	1	3	0.1	Scrap Bin	None	
UXO2_03_T30-2-00001	UXO2_03_T30-2	66.5	9/30/2011	277263.70	3828592.80	Cultural Debris	Scrap	N/A	N/A	N/A	1	0	0.5	Scrap Bin	None	Bolt
UXO2_03_T30-2-00002	UXO2_03_T30-2	4.3	9/30/2011	277225.20	3828640.30	Cultural Debris	Scrap	N/A	N/A	N/A	1	2	0.1	Scrap Bin	None	
UXO2_03_T30-2-00003	UXO2_03_T30-2	3.1	9/30/2011	277152.70	3828738.70	Cultural Debris	Scrap	N/A	N/A	N/A	1	1	0.1	Scrap Bin	None	Nail
UXO2_03_T30-2-00004	UXO2_03_T30-2	3.7	9/30/2011	277130.90	3828768.00	Cultural Debris	Scrap	N/A	N/A	N/A	2	1	0.1	Scrap Bin	None	Nail
UXO2_03_T30-2-00005	UXO2_03_T30-2	4.1	9/30/2011	277012.50	3828921.30	Cultural Debris	Scrap	N/A	N/A	N/A	1	4	0.25	Scrap Bin	None	
UXO2_03_T30-2-00006	UXO2_03_T30-2	5.6	9/30/2011	277009.80	3828924.10	Cultural Debris	Scrap	N/A	N/A	N/A	1	1	0.1	Scrap Bin	None	Nail
UXO2_03_T30-2-00007	UXO2_03_T30-2	3.0	9/30/2011	277003.60	3828931.50	Cultural Debris	Scrap	N/A	N/A	N/A	1	3	0.25	Scrap Bin	None	Alum tube
UXO2_03_T3-1-00001	UXO2_03_T3-1	5.1	9/25/2011	276779.10	3828775.70	Cultural Debris	Scrap	N/A	N/A	N/A	3	3	0.2	Scrap Bin	None	
UXO2_03_T3-1-00002	UXO2_03_T3-1	4.0	9/25/2011	276778.70	3828776.50	Cultural Debris	Scrap	N/A	N/A	N/A	3	2	0.1	Scrap Bin	None	

TABLE H-1

MEC Intrusive Investigation Results

Site UXO-02

MCIEAST-MCB CAMLEJ, North Carolina

Anomaly Identification	Grid	Amplitude (millivolts)	Dig Date	Easting (UTM)	Northing (UTM)	Item Group	Item Class	Category	Filler	Fuze	Quantity	Depth (inch)	Weight (pound)	Action Taken	Demolition Required?	Item Comment
UXO2_03_T3-1-00003	UXO2_03_T3-1	4.7	9/25/2011	276777.10	3828779.90	Cultural Debris	Scrap	N/A	N/A	N/A	4	2	0.2	Scrap Bin	None	
UXO2_03_T3-1-00004	UXO2_03_T3-1	8.6	9/25/2011	276776.60	3828780.90	Cultural Debris	Scrap	N/A	N/A	N/A	2	3	0.2	Scrap Bin	None	
UXO2_03_T3-1-00005	UXO2_03_T3-1	3.5	9/25/2011	276774.60	3828785.20	Cultural Debris	Scrap	N/A	N/A	N/A	8	3	0.1	Scrap Bin	None	
UXO2_03_T3-1-00006	UXO2_03_T3-1	3.8	9/25/2011	276761.90	3828801.90	Cultural Debris	Scrap	N/A	N/A	N/A	1	3	0.2	Scrap Bin	None	
UXO2_03_T31-1-00001	UXO2_03_T31-1	60.1	9/30/2011	277275.00	3828593.90	Cultural Debris	Scrap	N/A	N/A	N/A	1	1	0.7	Scrap Bin	None	
UXO2_03_T31-1-00002	UXO2_03_T31-1	3.7	9/30/2011	277201.30	3828685.90	No Contact	No Contact	N/A	N/A	N/A	0	0	0	Left in Place	None	
UXO2_03_T31-1-00003	UXO2_03_T31-1	7.1	9/30/2011	277170.10	3828731.80	Cultural Debris	Scrap	N/A	N/A	N/A	1	1	0.1	Scrap Bin	None	
UXO2_03_T31-1-00004	UXO2_03_T31-1	3.2	9/30/2011	277062.20	3828871.80	Cultural Debris	Scrap	N/A	N/A	N/A	1	3	0.1	Scrap Bin	None	
UXO2_03_T31-1-00005	UXO2_03_T31-1	3.3	9/30/2011	277059.10	3828876.20	Cultural Debris	Scrap	N/A	N/A	N/A	1	1	0.1	Scrap Bin	None	Nail
UXO2_03_T31-1-00006	UXO2_03_T31-1	3.9	9/30/2011	277049.00	3828887.10	Cultural Debris	Scrap	N/A	N/A	N/A	1	3	0.1	Scrap Bin	None	
UXO2_03_T31-1-00007	UXO2_03_T31-1	5.0	9/30/2011	277041.80	3828895.90	Cultural Debris	Scrap	N/A	N/A	N/A	1	3	0.1	Scrap Bin	None	
UXO2_03_T31-1-00008	UXO2_03_T31-1	30.0	9/30/2011	277022.60	3828921.60	Cultural Debris	Scrap	N/A	N/A	N/A	1	1	0.1	Scrap Bin	None	Nail
UXO2_03_T31-1-00009	UXO2_03_T31-1	11.9	9/30/2011	277017.30	3828928.00	Cultural Debris	Scrap	N/A	N/A	N/A	1	5	0.2	Scrap Bin	None	
UXO2_03_T31-1-00010	UXO2_03_T31-1	4.7	9/30/2011	277016.60	3828928.90	Cultural Debris	Scrap	N/A	N/A	N/A	1	5	0.25	Scrap Bin	None	
UXO2_03_T31-1-00011	UXO2_03_T31-1	986.2	9/30/2011	277015.80	3828929.90	Cultural Debris	Scrap	N/A	N/A	N/A	1	1	10	Scrap Bin	None	
UXO2_03_T31-1-00012	UXO2_03_T31-1	315.0	9/30/2011	277014.00	3828932.10	Cultural Debris	Scrap	N/A	N/A	N/A	1	3	5	Scrap Bin	None	
UXO2_03_T31-2-00001	UXO2_03_T31-2	14.3	9/30/2011	277276.40	3828593.80	Cultural Debris	Scrap	N/A	N/A	N/A	1	2	0.5	Scrap Bin	None	
UXO2_03_T31-2-00002	UXO2_03_T31-2	12.2	9/30/2011	277275.70	3828594.60	Cultural Debris	Scrap	N/A	N/A	N/A	1	4	0.1	Scrap Bin	None	
UXO2_03_T31-2-00003	UXO2_03_T31-2	3.3	9/30/2011	277231.50	3828649.10	Cultural Debris	Scrap	N/A	N/A	N/A	1	2	0.1	Scrap Bin	None	
UXO2_03_T31-2-00004	UXO2_03_T31-2	15.2	9/30/2011	277023.30	3828922.70	Cultural Debris	Scrap	N/A	N/A	N/A	1	1	0.1	Scrap Bin	None	Wire
UXO2_03_T31-2-00005	UXO2_03_T31-2	676.5	9/30/2011	277015.50	3828932.00	Cultural Debris	Scrap	N/A	N/A	N/A	1	3	25	Scrap Bin	None	Tool
UXO2_03_T31-2-00006	UXO2_03_T31-2	82.2	9/30/2011	277014.50	3828933.30	MPPEH	Grenade	M18 Smoke, Hand	Empty	Unfuzed	1	4	0.25	Consolidation Point	Demil	Determined to be MDAS
UXO2_03_T3-2-00001	UXO2_03_T3-2	6.3	9/25/2011	276780.90	3828775.80	Cultural Debris	Scrap	N/A	N/A	N/A	2	1	0.2	Scrap Bin	None	
UXO2_03_T3-2-00002	UXO2_03_T3-2	13.2	9/25/2011	276778.30	3828780.70	Cultural Debris	Scrap	N/A	N/A	N/A	2	2	0.2	Scrap Bin	None	
UXO2_03_T3-2-00003	UXO2_03_T3-2	150.9	9/25/2011	276777.90	3828781.60	Cultural Debris	Scrap	N/A	N/A	N/A	1	3	2	Scrap Bin	None	
UXO2_03_T3-2-00004	UXO2_03_T3-2	8.7	9/25/2011	276775.50	3828786.30	Cultural Debris	Scrap	N/A	N/A	N/A	7	3	0.3	Scrap Bin	None	
UXO2_03_T3-2-00005	UXO2_03_T3-2	3.1	9/25/2011	276755.10	3828810.80	Cultural Debris	Scrap	N/A	N/A	N/A	2	4	0.1	Scrap Bin	None	Survey nail
UXO2_03_T32-1-00001	UXO2_03_T32-1	12.5	9/30/2011	277289.20	3828594.70	Cultural Debris	Scrap	N/A	N/A	N/A	8	3	0.5	Scrap Bin	None	
UXO2_03_T32-1-00002	UXO2_03_T32-1	3.2	9/30/2011	277286.00	3828597.70	Cultural Debris	Scrap	N/A	N/A	N/A	1	6	0.1	Scrap Bin	None	
UXO2_03_T32-1-00003	UXO2_03_T32-1	3.4	9/30/2011	277259.20	3828628.00	Cultural Debris	Scrap	N/A	N/A	N/A	1	3	0.1	Scrap Bin	None	Nail
UXO2_03_T32-1-00004	UXO2_03_T32-1	4.9	9/30/2011	277244.10	3828648.90	Cultural Debris	Scrap	N/A	N/A	N/A	1	3	0.1	Scrap Bin	None	
UXO2_03_T32-1-00005	UXO2_03_T32-1	4.0	9/28/2011	277208.50	3828697.10	Cultural Debris	Scrap	N/A	N/A	N/A	1	2	0.1	Scrap Bin	None	
UXO2_03_T32-1-00006	UXO2_03_T32-1	3.4	9/28/2011	277207.20	3828698.60	Cultural Debris	Scrap	N/A	N/A	N/A	1	1	0.1	Scrap Bin	None	Nail
UXO2_03_T32-1-00007	UXO2_03_T32-1	22.6	9/28/2011	277197.30	3828710.40	Cultural Debris	Scrap	N/A	N/A	N/A	1	1	0.1	Scrap Bin	None	Nail
UXO2_03_T32-1-00008	UXO2_03_T32-1	3.3	9/28/2011	277180.50	3828731.10	Cultural Debris	Scrap	N/A	N/A	N/A	1	6	0.1	Scrap Bin	None	
UXO2_03_T32-1-00009	UXO2_03_T32-1	3.9	9/28/2011	277179.50	3828735.90	No Contact	No Contact	N/A	N/A	N/A	0	0	0	Left in Place	None	
UXO2_03_T32-1-00010	UXO2_03_T32-1	3.1	9/28/2011	277177.10	3828744.10	Cultural Debris	Scrap	N/A	N/A	N/A	1	2	0.1	Scrap Bin	None	Alum can
UXO2_03_T32-1-00011	UXO2_03_T32-1	3.1	9/28/2011	277140.20	3828787.60	Cultural Debris	Scrap	N/A	N/A	N/A	1	4	0.1	Scrap Bin	None	
UXO2_03_T32-1-00012	UXO2_03_T32-1	3.2	9/28/2011	277139.40	3828788.60	Cultural Debris	Scrap	N/A	N/A	N/A	1	6	0.1	Scrap Bin	None	
UXO2_03_T32-1-00013	UXO2_03_T32-1	3.0	9/28/2011	277103.60	3828828.60	No Contact	No Contact	N/A	N/A	N/A	0	0	0	Left in Place	None	
UXO2_03_T32-1-00014	UXO2_03_T32-1	11.7	9/28/2011	277065.00	3828882.00	MPPEH	Grenade	M18 Smoke, Hand	Empty	Unfuzed	1	2	0.25	Consolidation Point	Demil	Determined to be MDAS
UXO2_03_T32-1-00015	UXO2_03_T32-1	14.3	9/28/2011	277044.80	3828909.90	Cultural Debris	Scrap	N/A	N/A	N/A	1	6	1	Scrap Bin	None	
UXO2_03_T32-1-00016	UXO2_03_T32-1	24.2	9/28/2011	277027.00	3828932.50	Cultural Debris	Scrap	N/A	N/A	N/A	2	4	10	Scrap Bin	None	
UXO2_03_T32-1-00017	UXO2_03_T32-1	1030.8	9/28/2011	277023.10	3828937.90	Facility Resource	Facility Resource	Well head	N/A	N/A	0	0	0	Left in Place	None	
UXO2_03_T32-2-00001	UXO2_03_T32-2	12.1	9/30/2011	277290.50	3828594.60	Cultural Debris	Scrap	N/A	N/A	N/A	1	6	0.25	Scrap Bin	None	Wire mesh
UXO2_03_T32-2-00002	UXO2_03_T32-2	3.2	9/30/2011	277285.60	3828599.40	Cultural Debris	Scrap	N/A	N/A	N/A	1	6	0.2	Scrap Bin	None	Wire
UXO2_03_T32-2-00003	UXO2_03_T32-2	15.4	9/30/2011	277024.50	3828937.90	Cultural Debris	Scrap	N/A	N/A	N/A	1	1	0.1	Scrap Bin	None	Nail
UXO2_03_T33-1-00001	UXO2_03_T33-1	14.4	9/30/2011	277298.20	3828595.30	Cultural Debris	Scrap	N/A	N/A	N/A	1	1	1	Scrap Bin	None	Wire mesh
UXO2_03_T33-1-00002	UXO2_03_T33-1	5.9	9/30/2011	277297.30	3828596.20	Cultural Debris	Scrap	N/A	N/A	N/A	3	1	0.1	Scrap Bin	None	Nail
UXO2_03_T33-1-00003	UXO2_03_T33-1	45.2	9/30/2011	277293.30	3828600.50	Cultural Debris	Scrap	N/A	N/A	N/A	1	8	0.5	Scrap Bin	None	
UXO2_03_T33-1-00004	UXO2_03_T33-1	3.2	9/30/2011	277251.70	3828654.40	Cultural Debris	Scrap	N/A	N/A	N/A	1	6	0.1	Scrap Bin	None	
UXO2_03_T33-1-00005	UXO2_03_T33-1	35.2	9/30/2011	277244.20	3828665.20	QC	QC Seed	QC Seed	N/A	N/A	1	6	0.25	Consolidation Point	None	QC Seed #04
UXO2_03_T33-1-00006	UXO2_03_T33-1	8.9	9/28/2011	277195.70	3828730.70	Cultural Debris	Scrap	N/A	N/A	N/A	1	3	0.25	Scrap Bin	None	
UXO2_03_T33-1-00007	UXO2_03_T33-1	3.3	9/28/2011	277182.20	3828743.50	No Contact	No Contact	N/A	N/A	N/A	0	0	0	Left in Place	None	
UXO2_03_T33-1-00008	UXO2_03_T33-1	5.1	9/28/2011	277175.00	3828755.50	Cultural Debris	Scrap	N/A	N/A	N/A	1	3	0.1	Scrap Bin	None	Wire
UXO2_03_T33-1-00009	UXO2_03_T33-1	3.2	9/28/2011	277140.30	3828802.30	Cultural Debris	Scrap	N/A	N/A	N/A	1	3	0.1	Scrap Bin	None	Wire
UXO2_03_T33-1-00010	UXO2_03_T33-1	3.5	9/28/2011	277115.20	3828826.80	Cultural Debris	Scrap	N/A	N/A	N/A	1	6	0.1	Scrap Bin	None	Wire
UXO2_03_T33-1-00011	UXO2_03_T33-1	4.2	9/28/2011	277104.10	3828849.50	Cultural Debris	Scrap	N/A	N/A	N/A	1	1	0.1	Scrap Bin	None	Nail
UXO2_03_T33-1-00012	UXO2_03_T33-1	3.2	9/28/2011	277063.70	3828902.70	Cultural Debris	Scrap	N/A	N/A	N/A	3	6	0.1	Scrap Bin	None	Wire
UXO2_03_T33-1-00013	UXO2_03_T33-1	3.4	9/28/2011	277041.20	3828932.00	Cultural Debris	Scrap	N/A	N/A	N/A	1	6	0.1	Scrap Bin	None	
UXO2_03_T33-1-00014	UXO2_03_T33-1	3.5	9/28/2011	277035.60	3828938.60	Cultural Debris	Scrap	N/A	N/A	N/A	1	3	0.1	Scrap Bin	None	
UXO2_03_T33-2-00001	UXO2_03_T33-2	15.0	9/30/2011	277299.70	3828595.10	Cultural Debris	Scrap	N/A	N/A	N/A	1	3	0.1	Scrap Bin	None	Wire mesh
UXO2_03_T33-2-00002	UXO2_03_T33-2	3.7	9/30/2011	277244.90	3828666.20	Cultural Debris	Scrap	N/A	N/A	N/A	1	4	0.25	Scrap Bin	None	
UXO2_03_T33-2-00003	UXO2_03_T33-2	5.3	9/30/2011	277139.50	3828804.80	Cultural Debris	Scrap	N/A	N/A	N/A	8	3	0.25	Scrap Bin	None	Nail
UXO2_03_T33-2-00004	UXO2_03_T33-2	3.3	9/30/2011	277115.60	3828829.50	Cultural Debris	Scrap	N/A	N/A	N/A	2	6	0.1	Scrap Bin	None	
UXO2_03_T33-2-00005	UXO2_03_T33-2	22.6	9/30/2011	277035.90	3828940.10	Cultural Debris	Scrap	N/A	N/A	N/A	1	1	0.1	Scrap Bin	None	Nail
UXO2_03_T34-1-00001	UXO2_03_T34-1	14.9	9/30/2011	277309.20	3828596.20	Cultural Debris	Scrap	N/A	N/A	N/A	2	1	0.25	Scrap Bin	None	Wire mesh
UXO2_03_T34-1-00002	UXO2_03_T34-1	3.9	9/28/2011	277305.10	3828602.10	MPPEH	Flare	M127A1, Star Parachute	Empty	Unfuzed	1	0	0.2	Consolidation Point	Demil	Determined to be MDAS
UXO2_03_T34-1-00003	UXO2_03_T34-1	5.0	9/28/2011	277193.20	3828747.50	Cultural Debris	Scrap	N/A	N/A	N/A	1	6	0.1	Scrap Bin	None	
UXO2_03_T34-1-00004	UXO2_03_T34-1	3.9	9/28/2011	277118.40	3828841.70	Cultural Debris	Scrap	N/A	N/A	N/A	1	0	0.1	Scrap Bin	None	
UXO2_03_T34-1-00005	UXO2_03_T34-1	4.7	9/28/2011	277116.90	3828843.30	Cultural Debris	Scrap	N/A	N/A	N/A	2	3	0.1	Scrap Bin	None	
UXO2_03_T34-1-00006	UXO2_03_T34-1	6.5	9/28/2011	277109.50	3828856.30	Cultural Debris	Scrap	N/A	N/A	N/A	1	3	0.1	Scrap Bin	None	
UXO2_03_T34-1-00007	UXO2_03_T34-1	3.4	9/28/2011	277101.50	3828868.10	Cultural Debris	Scrap	N/A	N/A	N/A	1	3	0.1	Scrap Bin	None	
UXO2_03_T34-1-00008	UXO2_03_T34-1	4.0	9/30/2011	277100.60	3828869.40	Cultural Debris	Scrap	N/A	N/A	N/A	1	2	0.1	Scrap Bin	None	Wire
UXO2_03_T34-1-00009	UXO2_03_T34-1	5.5	9/28/2011	277097.10	3828875.60	Cultural Debris	Scrap	N/A	N/A	N/A	1	6	0.1	Scrap Bin	None	
UXO2_03_T34-1-00010	UXO2_03_T34-1	3.1	9/30/2011	277095.30	3828879.10	Cultural Debris	Scrap	N/A	N/A	N/A	1	1	0.1	Scrap Bin	None	Nail
UXO2_03_T34-1-00011	UXO2_03_T34-1	3.7	9/28/2011	277089.30	3828888.40	Cultural Debris	Scrap	N/A	N/A	N/A	1	3	0.1	Scrap Bin	None	
UXO2_03_T34-1-00012	UXO2_03_T34-1	5.1	9/28/2011	277082.90	3828896.40	Cultural Debris	Scrap	N/A	N/A	N/A	1	6	0.2	Scrap Bin	None	
UXO2_03_T34-1-00013	UXO2_03_T34-1	3.7	9/28/2011	277078.10	3828902.60	Cultural Debris	Scrap	N/A	N/A	N/A	1	3	0.1	Scrap Bin	None	

TABLE H-1

MEC Intrusive Investigation Results

Site UXO-02

MCIEAST-MCB CAMLEJ, North Carolina

Anomaly Identification	Grid	Amplitude (millivolts)	Dig Date	Easting (UTM)	Northing (UTM)	Item Group	Item Class	Category	Filler	Fuze	Quantity	Depth (inch)	Weight (pound)	Action Taken	Demolition Required?	Item Comment
UXO2_03_T34-1-00014	UXO2_03_T34-1	3.7	9/30/2011	277071.10	3828910.90	Cultural Debris	Scrap	N/A	N/A	N/A	1	8	0.25	Scrap Bin	None	
UXO2_03_T34-1-00015	UXO2_03_T34-1	7.3	9/28/2011	277053.50	3828933.00	Cultural Debris	Scrap	N/A	N/A	N/A	1	6	1	Scrap Bin	None	
UXO2_03_T34-1-00016	UXO2_03_T34-1	3.7	9/28/2011	277052.40	3828934.30	Cultural Debris	Scrap	N/A	N/A	N/A	1	3	0.5	Scrap Bin	None	
UXO2_03_T34-1-00017	UXO2_03_T34-1	7.4	9/28/2011	277044.60	3828943.10	Cultural Debris	Scrap	N/A	N/A	N/A	1	6	0.5	Scrap Bin	None	
UXO2_03_T34-2-00001	UXO2_03_T34-2	111.5	10/2/2011	277128.90	3828832.10	No Contact	No Contact	N/A	N/A	N/A	0	0	0	Left in Place	None	
UXO2_03_T34-2-00002	UXO2_03_T34-2	50.6	10/2/2011	277060.00	3828926.40	Cultural Debris	Scrap	N/A	N/A	N/A	1	7	2	Scrap Bin	None	
UXO2_03_T34-2-00003	UXO2_03_T34-2	24.9	10/2/2011	277047.50	3828941.40	Cultural Debris	Scrap	N/A	N/A	N/A	1	1	0.25	Scrap Bin	None	
UXO2_03_T34-2-00004	UXO2_03_T34-2	16.6	10/2/2011	277046.30	3828942.80	Cultural Debris	Scrap	N/A	N/A	N/A	1	1	0.1	Scrap Bin	None	Survey nail
UXO2_03_T35-1-00001	UXO2_03_T35-1	23.1	10/2/2011	277320.00	3828596.90	Cultural Debris	Scrap	N/A	N/A	N/A	1	6	0.5	Scrap Bin	None	Wire mesh
UXO2_03_T35-1-00002	UXO2_03_T35-1	5.1	10/2/2011	277318.40	3828598.80	Shared	Shared Target	Shared	N/A	N/A	0	0	0	Left in Place	None	Shared w/T35-1-00001
UXO2_03_T35-1-00003	UXO2_03_T35-1	3.8	10/2/2011	277263.40	3828670.20	No Contact	No Contact	N/A	N/A	N/A	0	0	0	Left in Place	None	
UXO2_03_T35-1-00004	UXO2_03_T35-1	3.4	10/2/2011	277205.20	3828749.20	No Contact	No Contact	N/A	N/A	N/A	0	0	0	Left in Place	None	
UXO2_03_T35-1-00005	UXO2_03_T35-1	8.8	10/2/2011	277180.00	3828781.10	Cultural Debris	Scrap	N/A	N/A	N/A	1	3	0.1	Scrap Bin	None	Wire
UXO2_03_T35-1-00006	UXO2_03_T35-1	3.4	10/2/2011	277119.30	3828859.60	Cultural Debris	Scrap	N/A	N/A	N/A	1	1	0.1	Scrap Bin	None	
UXO2_03_T35-1-00007	UXO2_03_T35-1	3.7	10/2/2011	277113.40	3828870.30	Cultural Debris	Scrap	N/A	N/A	N/A	1	9	0.25	Scrap Bin	None	
UXO2_03_T35-1-00008	UXO2_03_T35-1	7.4	10/2/2011	277092.80	3828898.80	Cultural Debris	Scrap	N/A	N/A	N/A	1	0	0.1	Scrap Bin	None	Wire
UXO2_03_T35-1-00009	UXO2_03_T35-1	3.3	10/2/2011	277089.30	3828903.40	Cultural Debris	Scrap	N/A	N/A	N/A	2	6	0.1	Scrap Bin	None	
UXO2_03_T35-1-00010	UXO2_03_T35-1	3.5	10/2/2011	277061.00	3828940.70	Cultural Debris	Scrap	N/A	N/A	N/A	1	3	0.1	Scrap Bin	None	Wire
UXO2_03_T35-2-00001	UXO2_03_T35-2	3.9	10/2/2011	277321.30	3828596.90	Cultural Debris	Scrap	N/A	N/A	N/A	1	3	0.1	Scrap Bin	None	
UXO2_03_T35-2-00002	UXO2_03_T35-2	6.7	10/2/2011	277320.00	3828598.60	No Contact	No Contact	N/A	N/A	N/A	0	0	0	Left in Place	None	
UXO2_03_T35-2-00003	UXO2_03_T35-2	7.8	10/2/2011	277319.20	3828599.50	Cultural Debris	Scrap	N/A	N/A	N/A	1	0	0.1	Scrap Bin	None	
UXO2_03_T35-2-00004	UXO2_03_T35-2	4.0	10/2/2011	277277.70	3828657.60	Cultural Debris	Scrap	N/A	N/A	N/A	1	1	0.1	Scrap Bin	None	Nail
UXO2_03_T35-2-00005	UXO2_03_T35-2	3.6	10/2/2011	277121.40	3828858.50	Cultural Debris	Scrap	N/A	N/A	N/A	2	6	0.1	Scrap Bin	None	
UXO2_03_T35-2-00006	UXO2_03_T35-2	3.2	10/2/2011	277110.80	3828875.60	Cultural Debris	Scrap	N/A	N/A	N/A	1	3	0.1	Scrap Bin	None	
UXO2_03_T35-2-00007	UXO2_03_T35-2	30.3	10/2/2011	277060.10	3828943.10	Facility Resource	Survey control point	Utility	N/A	N/A	0	1	0	Left in Place	None	Temp control point
UXO2_03_T35-2-00008	UXO2_03_T35-2	3.1	10/2/2011	277059.00	3828944.10	No Contact	No Contact	N/A	N/A	N/A	0	0	0	Left in Place	None	
UXO2_03_T35-2-00009	UXO2_03_T35-2	3.1	10/2/2011	277057.50	3828945.50	Cultural Debris	Scrap	N/A	N/A	N/A	1	6	0.1	Scrap Bin	None	
UXO2_03_T36-1-00001	UXO2_03_T36-1	4.4	10/2/2011	277105.40	3828895.30	Cultural Debris	Scrap	N/A	N/A	N/A	1	2	0.1	Scrap Bin	None	
UXO2_03_T36-1-00002	UXO2_03_T36-1	5.6	10/2/2011	277104.60	3828896.50	Cultural Debris	Scrap	N/A	N/A	N/A	1	3	0.25	Scrap Bin	None	
UXO2_03_T4-1-00001	UXO2_03_T4-1	17.2	9/25/2011	276793.60	3828776.00	Cultural Debris	Scrap	N/A	N/A	N/A	1	8	0.5	Scrap Bin	None	
UXO2_03_T4-1-00002	UXO2_03_T4-1	13.4	9/25/2011	276793.00	3828776.90	Cultural Debris	Scrap	N/A	N/A	N/A	2	3	0.3	Scrap Bin	None	
UXO2_03_T4-1-00003	UXO2_03_T4-1	10.2	9/25/2011	276792.70	3828777.40	Cultural Debris	Scrap	N/A	N/A	N/A	2	4	0.2	Scrap Bin	None	
UXO2_03_T4-1-00004	UXO2_03_T4-1	28.8	9/25/2011	276779.90	3828793.20	MPPEH	Projectile	40mm Cartridge Case	Expended	N/A	1	4	0.2	Consolidation Point	Demil	Determined to be MDAS
UXO2_03_T4-1-00005	UXO2_03_T4-1	4.2	9/25/2011	276778.50	3828797.30	Cultural Debris	Scrap	N/A	N/A	N/A	4	8	0.2	Scrap Bin	None	
UXO2_03_T4-1-00006	UXO2_03_T4-1	11.7	9/25/2011	276775.10	3828800.30	Cultural Debris	Scrap	N/A	N/A	N/A	6	6	0.3	Scrap Bin	None	
UXO2_03_T4-1-00007	UXO2_03_T4-1	6.3	9/25/2011	276769.00	3828808.90	Cultural Debris	Scrap	N/A	N/A	N/A	2	6	0.2	Scrap Bin	None	
UXO2_03_T4-2-00001	UXO2_03_T4-2	41.7	9/25/2011	276796.10	3828775.90	Facility Resource	Facility Resource	Road	N/A	N/A	0	6	0	Left in Place	None	Wire road mesh
UXO2_03_T4-2-00002	UXO2_03_T4-2	10.9	9/25/2011	276790.70	3828784.00	Cultural Debris	Scrap	N/A	N/A	N/A	6	12	0.2	Scrap Bin	None	
UXO2_03_T4-2-00003	UXO2_03_T4-2	34.7	9/25/2011	276788.90	3828785.00	Cultural Debris	Scrap	N/A	N/A	N/A	3	3	0.4	Scrap Bin	None	
UXO2_03_T4-2-00004	UXO2_03_T4-2	3.5	9/25/2011	276781.20	3828794.50	Cultural Debris	Scrap	N/A	N/A	N/A	4	6	0.1	Scrap Bin	None	
UXO2_03_T4-2-00005	UXO2_03_T4-2	5.2	9/25/2011	276780.80	3828795.50	Cultural Debris	Scrap	N/A	N/A	N/A	6	8	0.2	Scrap Bin	None	
UXO2_03_T4-2-00006	UXO2_03_T4-2	6.6	9/25/2011	276780.10	3828797.30	Cultural Debris	Scrap	N/A	N/A	N/A	1	2	0.1	Scrap Bin	None	
UXO2_03_T4-2-00007	UXO2_03_T4-2	33.5	9/25/2011	276774.00	3828803.60	Cultural Debris	Scrap	N/A	N/A	N/A	2	8	5	Scrap Bin	None	
UXO2_03_T4-2-00008	UXO2_03_T4-2	39.6	9/25/2011	276763.20	3828820.00	Cultural Debris	Scrap	N/A	N/A	N/A	2	6	5	Scrap Bin	None	
UXO2_03_T5-1-00001	UXO2_03_T5-1	18.0	9/25/2011	276806.30	3828776.20	Cultural Debris	Scrap	N/A	N/A	N/A	1	5	0.125	Scrap Bin	None	
UXO2_03_T5-1-00002	UXO2_03_T5-1	15.1	9/25/2011	276805.90	3828776.90	Cultural Debris	Scrap	N/A	N/A	N/A	1	3	0.5	Scrap Bin	None	
UXO2_03_T5-1-00003	UXO2_03_T5-1	3.3	9/25/2011	276803.20	3828781.40	Cultural Debris	Scrap	N/A	N/A	N/A	2	3	0.1	Scrap Bin	None	
UXO2_03_T5-1-00004	UXO2_03_T5-1	4.5	9/25/2011	276795.20	3828791.30	Cultural Debris	Scrap	N/A	N/A	N/A	3	6	0.2	Scrap Bin	None	
UXO2_03_T5-1-00005	UXO2_03_T5-1	3.0	9/25/2011	276780.80	3828811.00	Cultural Debris	Scrap	N/A	N/A	N/A	1	3	1	Scrap Bin	None	
UXO2_03_T5-1-00006	UXO2_03_T5-1	3.1	9/25/2011	276780.30	3828811.70	Cultural Debris	Scrap	N/A	N/A	N/A	1	6	0.1	Scrap Bin	None	
UXO2_03_T5-1-00007	UXO2_03_T5-1	6.0	9/25/2011	276770.30	3828823.90	Cultural Debris	Scrap	N/A	N/A	N/A	3	8	0.5	Scrap Bin	None	
UXO2_03_T5-1-00008	UXO2_03_T5-1	3.3	9/25/2011	276769.60	3828824.70	Cultural Debris	Scrap	N/A	N/A	N/A	3	3	0.1	Scrap Bin	None	
UXO2_03_T5-1-00009	UXO2_03_T5-1	3.7	9/25/2011	276767.80	3828826.70	Facility Resource	Facility Resource	Utility	N/A	N/A	0	3	0	Left in Place	None	
UXO2_03_T6-1-00001	UXO2_03_T6-1	3.7	9/25/2011	276806.90	3828792.00	Cultural Debris	Scrap	N/A	N/A	N/A	6	4	0.1	Scrap Bin	None	
UXO2_03_T6-1-00002	UXO2_03_T6-1	3.3	9/25/2011	276803.30	3828796.60	Cultural Debris	Scrap	N/A	N/A	N/A	2	4	0.1	Scrap Bin	None	
UXO2_03_T6-1-00003	UXO2_03_T6-1	4.1	9/25/2011	276791.50	3828812.00	Cultural Debris	Scrap	N/A	N/A	N/A	1	1	0.1	Scrap Bin	None	
UXO2_03_T6-1-00004	UXO2_03_T6-1	3.9	9/25/2011	276780.40	3828826.90	Cultural Debris	Scrap	N/A	N/A	N/A	5	3	0.1	Scrap Bin	None	
UXO2_03_T6-1-00005	UXO2_03_T6-1	8.1	9/25/2011	276777.20	3828831.20	Cultural Debris	Scrap	N/A	N/A	N/A	3	2	0.2	Scrap Bin	None	
UXO2_03_T6-2-00001	UXO2_03_T6-2	6.1	9/25/2011	276806.00	3828795.60	Cultural Debris	Scrap	N/A	N/A	N/A	2	3	0.1	Scrap Bin	None	
UXO2_03_T6-2-00002	UXO2_03_T6-2	4.7	9/25/2011	276804.20	3828798.00	Cultural Debris	Scrap	N/A	N/A	N/A	1	3	0.1	Scrap Bin	None	
UXO2_03_T6-2-00003	UXO2_03_T6-2	71.0	9/25/2011	276790.10	3828816.90	MPPEH	Thin walled frag	Smoke Grenade Piece (no nomenclature)	N/A	N/A	1	3	1.5	Consolidation Point	Demil	Determined to be MDAS
UXO2_03_T6-2-00004	UXO2_03_T6-2	9.2	9/25/2011	276783.30	3828826.00	Cultural Debris	Scrap	N/A	N/A	N/A	2	3	0.2	Scrap Bin	None	
UXO2_03_T6-2-00005	UXO2_03_T6-2	26.7	9/25/2011	276775.80	3828836.00	MPPEH	Grenade	MKII, Hand, Practice, Standard	Empty	Unfuzed	1	3	1	Consolidation Point	Demil	Determined to be MDAS
UXO2_03_T7-1-00001	UXO2_03_T7-1	3.1	9/25/2011	276815.80	3828797.60	Cultural Debris	Scrap	N/A	N/A	N/A	6	3	0.1	Scrap Bin	None	
UXO2_03_T7-1-00002	UXO2_03_T7-1	4.4	9/25/2011	276795.50	3828823.00	Cultural Debris	Scrap	N/A	N/A	N/A	3	2	0.1	Scrap Bin	None	
UXO2_03_T7-1-00003	UXO2_03_T7-1	43.5	9/25/2011	276791.90	3828827.10	QC	QC Seed	QC Seed	N/A	N/A	1	6	0.25	Consolidation Point	None	QC Seed #01
UXO2_03_T7-1-00004	UXO2_03_T7-1	3.1	9/25/2011	276784.20	3828836.40	Cultural Debris	Scrap	N/A	N/A	N/A	5	6	0.1	Scrap Bin	None	
UXO2_03_T7-2-00001	UXO2_03_T7-2	3.5	9/25/2011	276815.00	3828802.50	Cultural Debris	Scrap	N/A	N/A	N/A	3	3	0.1	Scrap Bin	None	
UXO2_03_T7-2-00002	UXO2_03_T7-2	35.4	9/25/2011	276780.90	3828843.30	Cultural Debris	Scrap	N/A	N/A	N/A	1	0	0.2	Scrap Bin	None	Survey nail
UXO2_03_T8-1-00001	UXO2_03_T8-1	27.2	9/25/2011	276824.40	3828801.80	Cultural Debris	Scrap	N/A	N/A	N/A	2	8	2	Scrap Bin	None	
UXO2_03_T8-1-00002	UXO2_03_T8-1	3.5	9/25/2011	276822.00	3828805.10	Cultural Debris	Scrap	N/A	N/A	N/A	6	5	0.1	Scrap Bin	None	
UXO2_03_T8-1-00003	UXO2_03_T8-1	44.1	9/25/2011	276810.90	3828821.50	MPPEH	Thin walled frag	Smoke Grenade Piece (no nomenclature)	N/A	N/A	1	6	1	Consolidation Point	Demil	Determined to be MDAS
UXO2_03_T8-1-00004	UXO2_03_T8-1	22.4	9/25/2011	276809.40	3828823.90	MPPEH	Thin walled frag	Smoke Grenade Piece (no nomenclature)	N/A	N/A	1	8	0.75	Consolidation Point	Demil	Determined to be MDAS
UXO2_03_T8-1-00005	UXO2_03_T8-1	3.0	9/25/2011	276803.90	3828830.30	Cultural Debris	Scrap	N/A	N/A	N/A	8	10	0.2	Scrap Bin	None	
UXO2_03_T8-1-00006	UXO2_03_T8-1	6.5	9/25/2011	276787.70	3828848.50	Cultural Debris	Scrap	N/A	N/A	N/A	2	12	0.2	Scrap Bin	None	
UXO2_03_T8-2-00001	UXO2_03_T8-2	15.8	9/25/2011	276825.70	3828802.40	Cultural Debris	Scrap	N/A	N/A	N/A	6	8	0.3	Scrap Bin	None	
UXO2_03_T8-2-00002	UXO2_03_T8-2	3.2	9/25/2011	276805.80	3828830.20	Cultural Debris	Scrap	N/A	N/A	N/A	1	2	0.1	Scrap Bin	None	
UXO2_03_T9-1-00001	UXO2_03_T9-1	4.7	9/25/2011	276854.00	3828784.10	Cultural Debris	Scrap	N/A	N/A	N/A	1	2	0.1	Scrap Bin	None	
UXO2_03_T9-1-00002	UXO2_03_T9-1	3.6	9/25/2011	276853.40	3828784.60	MPPEH	Grenade	MKII, Hand, Practice, Standard	Empty	Unfuzed	1	6	1	Consolidation Point	Demil	Determined to be MDAS

TABLE H-1

MEC Intrusive Investigation Results

Site UXO-02

MCIEAST-MCB CAMLEJ, North Carolina

Anomaly Identification	Grid	Amplitude (millivolts)	Dig Date	Easting (UTM)	Northing (UTM)	Item Group	Item Class	Category	Filler	Fuze	Quantity	Depth (inch)	Weight (pound)	Action Taken	Demolition Required?	Item Comment
UXO2_03_T9-1-00003	UXO2_03_T9-1	4.6	9/25/2011	276832.60	3828807.50	Cultural Debris	Scrap	N/A	N/A	N/A	8	18	0.3	Scrap Bin	None	
UXO2_03_T9-1-00004	UXO2_03_T9-1	3.2	9/25/2011	276830.70	3828810.70	Cultural Debris	Scrap	N/A	N/A	N/A	4	6	0.2	Scrap Bin	None	
UXO2_03_T9-1-00005	UXO2_03_T9-1	3.1	9/25/2011	276809.00	3828840.20	Cultural Debris	Scrap	N/A	N/A	N/A	2	8	0.2	Scrap Bin	None	
UXO2_03_T9-1-00006	UXO2_03_T9-1	23.0	9/25/2011	276801.30	3828850.50	Cultural Debris	Scrap	N/A	N/A	N/A	4	6	2	Scrap Bin	None	
UXO2_03_T9-1-00007	UXO2_03_T9-1	33.1	9/25/2011	276796.40	3828855.70	Cultural Debris	Scrap	N/A	N/A	N/A	3	6	1	Scrap Bin	None	
UXO2_03_T9-2-00001	UXO2_03_T9-2	295.8	9/25/2011	276855.80	3828784.20	Cultural Debris	Scrap	N/A	N/A	N/A	1	2	0.1	Scrap Bin	None	
UXO2_03_T9-2-00002	UXO2_03_T9-2	6.9	9/25/2011	276803.10	3828850.70	Cultural Debris	Scrap	N/A	N/A	N/A	1	6	0.5	Scrap Bin	None	
UXO2_03_T9-2-00003	UXO2_03_T9-2	3.0	9/25/2011	276801.20	3828852.80	Cultural Debris	Scrap	N/A	N/A	N/A	2	4	0.1	Scrap Bin	None	
UXO2_03_T9-2-00004	UXO2_03_T9-2	15.1	9/25/2011	276793.40	3828861.50	Cultural Debris	Scrap	N/A	N/A	N/A	2	6	0.3	Scrap Bin	None	
UXO2_04_T10-1-00001	UXO2_04_T10-1	13.2	10/2/2011	277438.00	3828607.90	Cultural Debris	Scrap	N/A	N/A	N/A	1	1	0.1	Scrap Bin	None	Nail
UXO2_04_T10-1-00002	UXO2_04_T10-1	3.3	10/2/2011	277407.00	3828652.00	No Contact	No Contact	N/A	N/A	N/A	0	0	0	Left in Place	None	
UXO2_04_T10-1-00003	UXO2_04_T10-1	3.1	10/2/2011	277345.60	3828724.80	No Contact	No Contact	N/A	N/A	N/A	0	0	0	Left in Place	None	
UXO2_04_T10-2-00001	UXO2_04_T10-2	3.9	10/2/2011	277413.80	3828641.70	Cultural Debris	Scrap	N/A	N/A	N/A	1	3	0.1	Scrap Bin	None	Nut
UXO2_04_T10-2-00002	UXO2_04_T10-2	3.1	10/2/2011	277409.10	3828649.50	No Contact	No Contact	N/A	N/A	N/A	0	0	0	Left in Place	None	
UXO2_04_T10-2-00003	UXO2_04_T10-2	54.3	10/2/2011	277377.60	3828689.30	Cultural Debris	Scrap	N/A	N/A	N/A	1	6	1	Scrap Bin	None	
UXO2_04_T10-2-00004	UXO2_04_T10-2	3.1	10/2/2011	277364.10	3828701.70	No Contact	No Contact	N/A	N/A	N/A	0	0	0	Left in Place	None	
UXO2_04_T1-1-00001	UXO2_04_T1-1	3.6	10/2/2011	277335.80	3828598.90	Cultural Debris	Scrap	N/A	N/A	N/A	1	4	0.1	Scrap Bin	None	Wire
UXO2_04_T1-1-00002	UXO2_04_T1-1	60.1	10/2/2011	277327.00	3828605.60	Cultural Debris	Scrap	N/A	N/A	N/A	1	2	0.1	Scrap Bin	None	Wire
UXO2_04_T11-1-00001	UXO2_04_T11-1	24.8	10/2/2011	277451.40	3828607.40	Cultural Debris	Scrap	N/A	N/A	N/A	1	1	0.1	Scrap Bin	None	Survey nail
UXO2_04_T11-2-00001	UXO2_04_T11-2	9.7	10/2/2011	277451.80	3828608.70	Cultural Debris	Scrap	N/A	N/A	N/A	1	6	0.5	Scrap Bin	None	
UXO2_04_T11-2-00002	UXO2_04_T11-2	4.9	10/2/2011	277450.30	3828610.70	Cultural Debris	Scrap	N/A	N/A	N/A	1	3	0.1	Scrap Bin	None	
UXO2_04_T11-2-00003	UXO2_04_T11-2	19.2	10/2/2011	277433.90	3828632.60	Cultural Debris	Scrap	N/A	N/A	N/A	1	6	0.1	Scrap Bin	None	
UXO2_04_T11-2-00004	UXO2_04_T11-2	4.0	10/2/2011	277358.00	3828730.10	Cultural Debris	Scrap	N/A	N/A	N/A	1	4	0.1	Scrap Bin	None	
UXO2_04_T1-2-00001	UXO2_04_T1-2	3.5	10/2/2011	277327.30	3828606.70	Cultural Debris	Scrap	N/A	N/A	N/A	1	3	0.1	Scrap Bin	None	
UXO2_04_T12-1-00001	UXO2_04_T12-1	5.3	10/2/2011	277358.40	3828744.10	Cultural Debris	Scrap	N/A	N/A	N/A	1	3	0.1	Scrap Bin	None	
UXO2_04_T12-2-00001	UXO2_04_T12-2	3.1	10/2/2011	277453.40	3828624.20	Cultural Debris	Scrap	N/A	N/A	N/A	1	6	0.1	Scrap Bin	None	
UXO2_04_T12-2-00002	UXO2_04_T12-2	12.2	10/2/2011	277421.00	3828665.20	Cultural Debris	Scrap	N/A	N/A	N/A	1	6	0.2	Scrap Bin	None	
UXO2_04_T12-2-00003	UXO2_04_T12-2	3.5	10/2/2011	277394.20	3828699.10	No Contact	No Contact	N/A	N/A	N/A	0	0	0	Left in Place	None	
UXO2_04_T13-1-00001	UXO2_04_T13-1	9.5	10/2/2011	277456.70	3828634.40	MPPEH	Grenade	M18 Smoke, Hand	Empty	Unfuzed	1	6	0.25	Consolidation Point	Demil	Determined to be MDAS
UXO2_04_T13-1-00002	UXO2_04_T13-1	3.4	10/2/2011	277370.50	3828750.00	No Contact	No Contact	N/A	N/A	N/A	0	0	0	Left in Place	None	
UXO2_04_T13-1-00003	UXO2_04_T13-1	3.7	10/2/2011	277365.30	3828755.30	No Contact	No Contact	N/A	N/A	N/A	0	0	0	Left in Place	None	
UXO2_04_T13-1-00004	UXO2_04_T13-1	6.0	10/2/2011	277364.20	3828755.60	No Contact	No Contact	N/A	N/A	N/A	0	0	0	Left in Place	None	
UXO2_04_T13-2-00001	UXO2_04_T13-2	32.3	10/2/2011	277475.90	3828612.10	Cultural Debris	Scrap	N/A	N/A	N/A	1	1	0.1	Scrap Bin	None	Survey nail
UXO2_04_T13-2-00002	UXO2_04_T13-2	3.0	10/2/2011	277463.00	3828628.80	Cultural Debris	Scrap	N/A	N/A	N/A	1	0	0.1	Scrap Bin	None	
UXO2_04_T13-2-00003	UXO2_04_T13-2	3.2	10/2/2011	277433.40	3828660.60	No Contact	No Contact	N/A	N/A	N/A	0	0	0	Left in Place	None	
UXO2_04_T13-2-00004	UXO2_04_T13-2	3.3	10/2/2011	277408.60	3828698.60	No Contact	No Contact	N/A	N/A	N/A	0	0	0	Left in Place	None	
UXO2_04_T13-2-00005	UXO2_04_T13-2	3.1	10/2/2011	277387.40	3828716.60	No Contact	No Contact	N/A	N/A	N/A	0	0	0	Left in Place	None	
UXO2_04_T14-1-00001	UXO2_04_T14-1	6.1	10/2/2011	277483.80	3828614.30	Cultural Debris	Scrap	N/A	N/A	N/A	1	1	0.1	Scrap Bin	None	Survey nail
UXO2_04_T14-1-00002	UXO2_04_T14-1	3.0	10/2/2011	277437.80	3828675.60	No Contact	No Contact	N/A	N/A	N/A	0	0	0	Left in Place	None	
UXO2_04_T14-1-00003	UXO2_04_T14-1	3.9	10/2/2011	277447.10	3828764.40	No Contact	No Contact	N/A	N/A	N/A	0	0	0	Left in Place	None	
UXO2_04_T14-1-00004	UXO2_04_T14-1	3.2	10/2/2011	277368.50	3828765.30	No Contact	No Contact	N/A	N/A	N/A	0	0	0	Left in Place	None	
UXO2_04_T14-1-00005	UXO2_04_T14-1	6.0	10/2/2011	277367.80	3828766.00	No Contact	No Contact	N/A	N/A	N/A	0	0	0	Left in Place	None	
UXO2_04_T14-1-00006	UXO2_04_T14-1	3.0	10/2/2011	277432.30	3828781.20	No Contact	No Contact	N/A	N/A	N/A	0	0	0	Left in Place	None	
UXO2_04_T14-1-00007	UXO2_04_T14-1	3.8	10/2/2011	277423.40	3828792.70	No Contact	No Contact	N/A	N/A	N/A	0	0	0	Left in Place	None	
UXO2_04_T14-2-00001	UXO2_04_T14-2	4.2	10/2/2011	277432.10	3828683.30	Cultural Debris	Scrap	N/A	N/A	N/A	1	1	0.1	Scrap Bin	None	
UXO2_04_T14-2-00002	UXO2_04_T14-2	3.3	10/2/2011	277420.60	3828699.90	No Contact	No Contact	N/A	N/A	N/A	0	0	0	Left in Place	None	
UXO2_04_T14-2-00003	UXO2_04_T14-2	3.3	10/2/2011	277418.20	3828703.30	Cultural Debris	Scrap	N/A	N/A	N/A	1	1	0.1	Scrap Bin	None	
UXO2_04_T14-2-00004	UXO2_04_T14-2	41.9	10/2/2011	277368.50	3828767.00	QC	QC Seed	QC Seed	N/A	N/A	1	6	0.25	Consolidation Point	None	QC Seed #08
UXO2_04_T15-1-00001	UXO2_04_T15-1	12.9	10/2/2011	277495.10	3828616.30	Cultural Debris	Scrap	N/A	N/A	N/A	1	1	0.1	Scrap Bin	None	Survey nail
UXO2_04_T15-1-00002	UXO2_04_T15-1	8.3	10/2/2011	277455.90	3828667.40	Cultural Debris	Scrap	N/A	N/A	N/A	2	6	0.2	Scrap Bin	None	Bolt
UXO2_04_T15-1-00003	UXO2_04_T15-1	3.6	10/2/2011	277446.30	3828682.00	No Contact	No Contact	N/A	N/A	N/A	0	0	0	Left in Place	None	
UXO2_04_T15-1-00004	UXO2_04_T15-1	3.1	10/2/2011	277426.20	3828709.00	No Contact	No Contact	N/A	N/A	N/A	0	0	0	Left in Place	None	
UXO2_04_T15-2-00001	UXO2_04_T15-2	15.7	10/2/2011	277495.90	3828617.30	Cultural Debris	Scrap	N/A	N/A	N/A	1	6	0.25	Scrap Bin	None	
UXO2_04_T15-2-00002	UXO2_04_T15-2	55.2	10/2/2011	277453.50	3828673.20	Cultural Debris	Scrap	N/A	N/A	N/A	1	6	0.1	Scrap Bin	None	Wire
UXO2_04_T15-2-00003	UXO2_04_T15-2	3.0	10/2/2011	277427.70	3828709.30	No Contact	No Contact	N/A	N/A	N/A	0	0	0	Left in Place	None	
UXO2_04_T15-2-00004	UXO2_04_T15-2	4.5	10/2/2011	277410.20	3828728.50	Cultural Debris	Scrap	N/A	N/A	N/A	1	6	0.1	Scrap Bin	None	Wire
UXO2_04_T15-2-00005	UXO2_04_T15-2	3.7	10/2/2011	277384.50	3828760.80	No Contact	No Contact	N/A	N/A	N/A	0	0	0	Left in Place	None	
UXO2_04_T16-1-00001	UXO2_04_T16-1	4.1	10/2/2011	277446.70	3828692.50	Cultural Debris	Scrap	N/A	N/A	N/A	1	6	0.1	Scrap Bin	None	Wire
UXO2_04_T16-2-00001	UXO2_04_T16-2	3.8	10/2/2011	277509.70	3828615.30	Cultural Debris	Scrap	N/A	N/A	N/A	1	1	0.1	Scrap Bin	None	Wire
UXO2_04_T16-2-00002	UXO2_04_T16-2	6.9	10/2/2011	277491.90	3828639.60	Cultural Debris	Scrap	N/A	N/A	N/A	1	6	0.1	Scrap Bin	None	Wire
UXO2_04_T16-2-00003	UXO2_04_T16-2	3.6	10/2/2011	277480.30	3828654.30	Cultural Debris	Scrap	N/A	N/A	N/A	1	6	0.1	Scrap Bin	None	
UXO2_04_T16-2-00004	UXO2_04_T16-2	3.4	10/2/2011	277465.00	3828673.90	Cultural Debris	Scrap	N/A	N/A	N/A	3	4	0.1	Scrap Bin	None	Wire
UXO2_04_T16-2-00005	UXO2_04_T16-2	5.0	10/2/2011	277441.30	3828702.50	No Contact	No Contact	N/A	N/A	N/A	0	0	0	Left in Place	None	
UXO2_04_T16-2-00006	UXO2_04_T16-2	5.3	10/2/2011	277440.80	3828703.10	No Contact	No Contact	N/A	N/A	N/A	0	0	0	Left in Place	None	
UXO2_04_T16-2-00007	UXO2_04_T16-2	6.4	10/2/2011	277439.50	3828704.30	No Contact	No Contact	N/A	N/A	N/A	0	0	0	Left in Place	None	
UXO2_04_T16-2-00008	UXO2_04_T16-2	3.5	10/2/2011	277418.70	3828735.40	Cultural Debris	Scrap	N/A	N/A	N/A	1	0	0.1	Scrap Bin	None	
UXO2_04_T16-2-00009	UXO2_04_T16-2	3.2	10/2/2011	277406.40	3828750.70	No Contact	No Contact	N/A	N/A	N/A	0	0	0	Left in Place	None	
UXO2_04_T16-2-00010	UXO2_04_T16-2	4.0	10/2/2011	277404.90	3828752.70	No Contact	No Contact	N/A	N/A	N/A	0	0	0	Left in Place	None	
UXO2_04_T16-2-00011	UXO2_04_T16-2	3.7	10/2/2011	277401.30	3828757.60	No Contact	No Contact	N/A	N/A	N/A	0	0	0	Left in Place	None	
UXO2_04_T17-1-00001	UXO2_04_T17-1	3.1	10/2/2011	277480.30	3828670.10	Cultural Debris	Scrap	N/A	N/A	N/A	1	1	0.1	Scrap Bin	None	Wire
UXO2_04_T17-1-00002	UXO2_04_T17-1	17.8	10/2/2011	277470.10	3828683.60	Cultural Debris	Scrap	N/A	N/A	N/A	1	1	0.1	Scrap Bin	None	Nail
UXO2_04_T17-1-00003	UXO2_04_T17-1	3.2	10/2/2011	277457.70	3828696.00	No Contact	No Contact	N/A	N/A	N/A	0	0	0	Left in Place	None	
UXO2_04_T17-1-00004	UXO2_04_T17-1	4.0	10/2/2011	277429.80	3828734.70	Cultural Debris	Scrap	N/A	N/A	N/A	1	3	0.1	Scrap Bin	None	Wire
UXO2_04_T17-2-00001	UXO2_04_T17-2	4.5	10/2/2011	277418.60	3828745.00	No Contact	No Contact	N/A	N/A	N/A	0	0	0	Left in Place	None	
UXO2_04_T17-2-00002	UXO2_04_T17-2	3.9	10/2/2011	277400.20	3828774.40	No Contact	No Contact	N/A	N/A	N/A	0	0	0	Left in Place	None	
UXO2_04_T17-2-00003	UXO2_04_T17-2	4.4	10/2/2011	277395.00	3828781.30	No Contact	No Contact	N/A	N/A	N/A	0	0	0	Left in Place	None	
UXO2_04_T18-1-00001	UXO2_04_T18-1	2668.3	10/2/2011	277503.10	3828656.80	RRD	Ammo Can	Empty	N/A	N/A	1	10	6	Consolidation Point	Demil	
UXO2_04_T18-2-00001	UXO2_04_T18-2	3.4	10/2/2011	277534.30	3828619.20	Cultural Debris	Scrap	N/A	N/A	N/A	1	3	0.1	Scrap Bin	None	
UXO2_04_T18-2-00002	UXO2_04_T18-2	3.2	10/2/2011	277493.10	3828668.00	Cultural Debris	Scrap	N/A	N/A	N/A	1	1	0.1	Scrap Bin	None	Wire

TABLE H-1

MEC Intrusive Investigation Results

Site UXO-02

MCIEAST-MCB CAMLEJ, North Carolina

Anomaly Identification	Grid	Amplitude (millivolts)	Dig Date	Easting (UTM)	Northing (UTM)	Item Group	Item Class	Category	Filler	Fuze	Quantity	Depth (inch)	Weight (pound)	Action Taken	Demolition Required?	Item Comment
UXO2_04_T18-2-00003	UXO2_04_T18-2	4.2	10/2/2011	277429.10	3828751.60	Cultural Debris	Scrap	N/A	N/A	N/A	1	0	0.1	Scrap Bin	None	
UXO2_04_T19-1-00001	UXO2_04_T19-1	3.4	10/2/2011	277524.10	3828641.40	Cultural Debris	Scrap	N/A	N/A	N/A	1	3	0.1	Scrap Bin	None	Wire
UXO2_04_T19-2-00001	UXO2_04_T19-2	4.2	10/2/2011	277543.20	3828620.70	Cultural Debris	Scrap	N/A	N/A	N/A	1	3	0.1	Scrap Bin	None	Wire
UXO2_04_T19-2-00002	UXO2_04_T19-2	3.1	10/2/2011	277531.50	3828634.50	Cultural Debris	Scrap	N/A	N/A	N/A	1	6	0.1	Scrap Bin	None	Wire
UXO2_04_T19-2-00003	UXO2_04_T19-2	4.0	10/2/2011	277527.80	3828638.90	Cultural Debris	Scrap	N/A	N/A	N/A	1	0	0.1	Scrap Bin	None	
UXO2_04_T19-2-00004	UXO2_04_T19-2	37.7	10/2/2011	277525.10	3828642.20	QC	QC Seed	QC Seed	N/A	N/A	1	6	0.25	Consolidation Point	None	QC Seed #06
UXO2_04_T19-2-00005	UXO2_04_T19-2	3.0	10/2/2011	277505.50	3828669.40	Cultural Debris	Scrap	N/A	N/A	N/A	1	6	0.1	Scrap Bin	None	
UXO2_04_T19-2-00006	UXO2_04_T19-2	3.3	10/2/2011	277465.70	3828719.30	No Contact	No Contact	N/A	N/A	N/A	0	0	0	Left in Place	None	
UXO2_04_T19-2-00007	UXO2_04_T19-2	3.0	10/2/2011	277438.00	3828759.10	No Contact	No Contact	N/A	N/A	N/A	0	0	0	Left in Place	None	
UXO2_04_T19-2-00008	UXO2_04_T19-2	3.9	10/2/2011	277429.90	3828771.70	No Contact	No Contact	N/A	N/A	N/A	0	0	0	Left in Place	None	
UXO2_04_T20-1-00001	UXO2_04_T20-1	29.9	10/2/2011	277552.70	3828623.80	Cultural Debris	Scrap	N/A	N/A	N/A	1	1	0.1	Scrap Bin	None	Survey nail
UXO2_04_T20-2-00001	UXO2_04_T20-2	3.6	10/2/2011	277555.70	3828621.40	Cultural Debris	Scrap	N/A	N/A	N/A	1	3	0.1	Scrap Bin	None	
UXO2_04_T20-2-00002	UXO2_04_T20-2	3.0	10/2/2011	277540.80	3828639.90	No Contact	No Contact	N/A	N/A	N/A	0	0	0	Left in Place	None	
UXO2_04_T20-2-00003	UXO2_04_T20-2	4.2	10/2/2011	277539.10	3828643.30	No Contact	No Contact	N/A	N/A	N/A	0	0	0	Left in Place	None	
UXO2_04_T20-2-00004	UXO2_04_T20-2	3.9	10/2/2011	277522.40	3828669.40	No Contact	No Contact	N/A	N/A	N/A	0	0	0	Left in Place	None	
UXO2_04_T20-2-00005	UXO2_04_T20-2	3.7	10/2/2011	277494.80	3828699.50	No Contact	No Contact	N/A	N/A	N/A	0	0	0	Left in Place	None	
UXO2_04_T2-1-00001	UXO2_04_T2-1	23.8	10/2/2011	277347.10	3828599.70	Cultural Debris	Scrap	N/A	N/A	N/A	1	3	0.1	Scrap Bin	None	Wire mesh
UXO2_04_T2-1-00002	UXO2_04_T2-1	28.5	10/2/2011	277326.30	3828623.00	QC	QC Seed	QC Seed	N/A	N/A	1	6	0.25	Consolidation Point	None	QC Seed #05
UXO2_04_T21-1-00001	UXO2_04_T21-1	3.1	10/2/2011	277478.90	3828731.80	No Contact	No Contact	N/A	N/A	N/A	0	0	0	Left in Place	None	
UXO2_04_T21-1-00002	UXO2_04_T21-1	3.8	10/2/2011	277469.50	3828745.40	Cultural Debris	Scrap	N/A	N/A	N/A	1	3	0.1	Scrap Bin	None	Wire
UXO2_04_T21-2-00001	UXO2_04_T21-2	4.5	10/2/2011	277566.10	3828622.60	Cultural Debris	Scrap	N/A	N/A	N/A	1	1	0.1	Scrap Bin	None	
UXO2_04_T21-2-00002	UXO2_04_T21-2	12.3	10/2/2011	277563.30	3828626.70	Cultural Debris	Scrap	N/A	N/A	N/A	1	1	0.1	Scrap Bin	None	Survey nail
UXO2_04_T21-2-00003	UXO2_04_T21-2	220.2	10/2/2011	277558.60	3828633.70	No Contact	No Contact	N/A	N/A	N/A	0	0	0	Left in Place	None	
UXO2_04_T21-2-00004	UXO2_04_T21-2	3.2	10/2/2011	277555.00	3828639.00	No Contact	No Contact	N/A	N/A	N/A	0	0	0	Left in Place	None	
UXO2_04_T21-2-00005	UXO2_04_T21-2	3.7	10/2/2011	277551.10	3828644.40	Cultural Debris	Scrap	N/A	N/A	N/A	1	8	0.1	Scrap Bin	None	
UXO2_04_T21-2-00006	UXO2_04_T21-2	3.1	10/2/2011	277541.30	3828655.90	No Contact	No Contact	N/A	N/A	N/A	0	0	0	Left in Place	None	
UXO2_04_T21-2-00007	UXO2_04_T21-2	4.7	10/2/2011	277535.10	3828662.80	Cultural Debris	Scrap	N/A	N/A	N/A	1	9	0.15	Scrap Bin	None	Wire
UXO2_04_T21-2-00008	UXO2_04_T21-2	3.9	10/2/2011	277498.30	3828709.00	No Contact	No Contact	N/A	N/A	N/A	0	0	0	Left in Place	None	
UXO2_04_T21-2-00009	UXO2_04_T21-2	3.2	10/2/2011	277480.50	3828731.30	No Contact	No Contact	N/A	N/A	N/A	0	0	0	Left in Place	None	
UXO2_04_T21-2-00010	UXO2_04_T21-2	3.1	10/2/2011	277478.30	3828736.60	No Contact	No Contact	N/A	N/A	N/A	0	0	0	Left in Place	None	
UXO2_04_T21-2-00011	UXO2_04_T21-2	6.0	10/2/2011	277477.90	3828737.40	No Contact	No Contact	N/A	N/A	N/A	0	0	0	Left in Place	None	
UXO2_04_T2-2-00001	UXO2_04_T2-2	5.0	10/2/2011	277348.20	3828600.20	Cultural Debris	Scrap	N/A	N/A	N/A	1	3	0.2	Scrap Bin	None	Wire mesh
UXO2_04_T2-2-00002	UXO2_04_T2-2	3.4	10/2/2011	277312.00	3828643.80	Cultural Debris	Scrap	N/A	N/A	N/A	2	3	0.15	Scrap Bin	None	Nail
UXO2_04_T22-1-00001	UXO2_04_T22-1	14.4	10/2/2011	277574.10	3828627.10	Cultural Debris	Scrap	N/A	N/A	N/A	1	1	0.1	Scrap Bin	None	Survey nail
UXO2_04_T22-1-00002	UXO2_04_T22-1	13.2	10/2/2011	277572.90	3828628.40	Cultural Debris	Scrap	N/A	N/A	N/A	1	3	0.2	Scrap Bin	None	
UXO2_04_T22-1-00003	UXO2_04_T22-1	3.2	10/2/2011	277487.40	3828738.40	No Contact	No Contact	N/A	N/A	N/A	0	0	0	Left in Place	None	
UXO2_04_T22-2-00001	UXO2_04_T22-2	7.1	10/2/2011	277573.30	3828629.60	Cultural Debris	Scrap	N/A	N/A	N/A	1	3	0.2	Scrap Bin	None	
UXO2_04_T22-2-00002	UXO2_04_T22-2	40.3	10/2/2011	277552.60	3828656.50	Cultural Debris	Scrap	N/A	N/A	N/A	1	15	4	Scrap Bin	None	
UXO2_04_T22-2-00003	UXO2_04_T22-2	3.8	10/2/2011	277531.00	3828686.20	No Contact	No Contact	N/A	N/A	N/A	0	0	0	Left in Place	None	
UXO2_04_T23-1-00001	UXO2_04_T23-1	5.3	10/2/2011	277581.30	3828634.70	Cultural Debris	Scrap	N/A	N/A	N/A	1	6	0.1	Scrap Bin	None	
UXO2_04_T23-1-00002	UXO2_04_T23-1	34.6	10/2/2011	277516.90	3828721.50	Cultural Debris	Scrap	N/A	N/A	N/A	1	6	0.1	Scrap Bin	None	Nail
UXO2_04_T23-1-00003	UXO2_04_T23-1	3.1	10/2/2011	277496.40	3828742.00	No Contact	No Contact	N/A	N/A	N/A	0	0	0	Left in Place	None	
UXO2_04_T23-2-00001	UXO2_04_T23-2	28.3	10/2/2011	277585.50	3828631.20	Cultural Debris	Scrap	N/A	N/A	N/A	1	6	0.1	Scrap Bin	None	Survey nail
UXO2_04_T23-2-00002	UXO2_04_T23-2	3.2	10/2/2011	277583.10	3828634.30	No Contact	No Contact	N/A	N/A	N/A	0	0	0	Left in Place	None	
UXO2_04_T24-1-00001	UXO2_04_T24-1	3.2	10/2/2011	277508.50	3828744.30	No Contact	No Contact	N/A	N/A	N/A	0	0	0	Left in Place	None	
UXO2_04_T24-2-00001	UXO2_04_T24-2	3.7	10/2/2011	277600.10	3828628.20	No Contact	No Contact	N/A	N/A	N/A	0	0	0	Left in Place	None	
UXO2_04_T24-2-00002	UXO2_04_T24-2	39.9	10/2/2011	277593.40	3828636.10	Cultural Debris	Scrap	N/A	N/A	N/A	1	6	0.1	Scrap Bin	None	Survey nail
UXO2_04_T24-2-00003	UXO2_04_T24-2	3.1	10/2/2011	277573.90	3828665.50	No Contact	No Contact	N/A	N/A	N/A	0	0	0	Left in Place	None	
UXO2_04_T24-2-00004	UXO2_04_T24-2	3.2	10/2/2011	277540.70	3828705.10	No Contact	No Contact	N/A	N/A	N/A	0	0	0	Left in Place	None	
UXO2_04_T25-1-00001	UXO2_04_T25-1	74.8	10/3/2011	277578.10	3828673.10	Cultural Debris	Scrap	N/A	N/A	N/A	1	6	0.5	Scrap Bin	None	
UXO2_04_T25-1-00002	UXO2_04_T25-1	3.6	10/3/2011	277528.40	3828735.10	Cultural Debris	Scrap	N/A	N/A	N/A	1	3	0.1	Scrap Bin	None	Wire
UXO2_04_T25-1-00003	UXO2_04_T25-1	3.5	10/3/2011	277528.10	3828735.70	Cultural Debris	Scrap	N/A	N/A	N/A	1	6	0.1	Scrap Bin	None	Wire
UXO2_04_T25-2-00001	UXO2_04_T25-2	3.7	10/3/2011	277611.30	3828630.40	Cultural Debris	Scrap	N/A	N/A	N/A	1	6	0.1	Scrap Bin	None	Wire
UXO2_04_T25-2-00002	UXO2_04_T25-2	3.0	10/3/2011	277609.40	3828633.00	Cultural Debris	Scrap	N/A	N/A	N/A	1	1	0.1	Scrap Bin	None	Nail
UXO2_04_T25-2-00003	UXO2_04_T25-2	5.0	10/3/2011	277608.70	3828634.00	Cultural Debris	Scrap	N/A	N/A	N/A	1	3	0.1	Scrap Bin	None	
UXO2_04_T25-2-00004	UXO2_04_T25-2	3.5	10/3/2011	277595.00	3828653.80	Cultural Debris	Scrap	N/A	N/A	N/A	1	6	0.1	Scrap Bin	None	
UXO2_04_T25-2-00005	UXO2_04_T25-2	3.1	10/3/2011	277548.00	3828713.10	Cultural Debris	Scrap	N/A	N/A	N/A	1	6	0.1	Scrap Bin	None	Battery
UXO2_04_T25-2-00006	UXO2_04_T25-2	4.1	10/3/2011	277536.10	3828725.80	Cultural Debris	Scrap	N/A	N/A	N/A	1	6	0.1	Scrap Bin	None	
UXO2_04_T26-1-00001	UXO2_04_T26-1	37.8	10/3/2011	277620.00	3828633.80	Cultural Debris	Scrap	N/A	N/A	N/A	1	6	0.1	Scrap Bin	None	Nail
UXO2_04_T26-1-00002	UXO2_04_T26-1	240.9	10/3/2011	277584.70	3828679.90	RRD	Ammo Can	N/A	Empty	N/A	1	10	10	Consolidation Point	Demil	
UXO2_04_T26-2-00001	UXO2_04_T26-2	4.0	10/3/2011	277623.70	3828630.90	Cultural Debris	Scrap	N/A	N/A	N/A	1	6	0.1	Scrap Bin	None	
UXO2_04_T26-2-00002	UXO2_04_T26-2	3.1	10/3/2011	277623.20	3828631.60	No Contact	No Contact	N/A	N/A	N/A	0	0	0	Left in Place	None	
UXO2_04_T26-2-00003	UXO2_04_T26-2	100.9	10/3/2011	277585.40	3828681.00	RRD	Ammo Can	N/A	Empty	N/A	1	10	10	Consolidation Point	Demil	
UXO2_04_T26-2-00004	UXO2_04_T26-2	4.3	10/3/2011	277562.30	3828710.70	Cultural Debris	Scrap	N/A	N/A	N/A	1	6	0.1	Scrap Bin	None	
UXO2_04_T26-2-00005	UXO2_04_T26-2	3.7	10/3/2011	277551.30	3828725.30	Cultural Debris	Scrap	N/A	N/A	N/A	1	0	0.1	Scrap Bin	None	
UXO2_04_T27-1-00001	UXO2_04_T27-1	28.4	10/3/2011	277609.60	3828663.20	Cultural Debris	Scrap	N/A	N/A	N/A	1	1	0.1	Scrap Bin	None	Nail
UXO2_04_T27-1-00002	UXO2_04_T27-1	3.9	10/3/2011	277538.50	3828767.60	Cultural Debris	Scrap	N/A	N/A	N/A	1	3	0.1	Scrap Bin	None	
UXO2_04_T27-1-00003	UXO2_04_T27-1	3.7	10/3/2011	277517.30	3828792.30	No Contact	No Contact	N/A	N/A	N/A	0	0	0	Left in Place	None	
UXO2_04_T27-1-00004	UXO2_04_T27-1	3.3	10/3/2011	277508.90	3828800.20	No Contact	No Contact	N/A	N/A	N/A	0	0	0	Left in Place	None	
UXO2_04_T27-1-00005	UXO2_04_T27-1	3.3	10/3/2011	277488.90	3828821.20	No Contact	No Contact	N/A	N/A	N/A	0	0	0	Left in Place	None	
UXO2_04_T27-2-00001	UXO2_04_T27-2	3.6	10/3/2011	277635.90	3828631.90	No Contact	No Contact	N/A	N/A	N/A	0	0	0	Left in Place	None	
UXO2_04_T27-2-00002	UXO2_04_T27-2	4.8	10/3/2011	277629.30	3828640.00	Cultural Debris	Scrap	N/A	N/A	N/A	1	6	0.1	Scrap Bin	None	
UXO2_04_T27-2-00003	UXO2_04_T27-2	3.2	10/3/2011	277597.90	3828682.10	No Contact	No Contact	N/A	N/A	N/A	0	0	0	Left in Place	None	
UXO2_04_T27-2-00004	UXO2_04_T27-2	3.9	10/3/2011	277589.30	3828692.40	Cultural Debris	Scrap	N/A	N/A	N/A	1	6	0.1	Scrap Bin	None	Wire
UXO2_04_T27-2-00005	UXO2_04_T27-2	34.2	10/3/2011	277554.20	3828741.00	Cultural Debris	Scrap	N/A	N/A	N/A	1	3	0.2	Scrap Bin	None	
UXO2_04_T27-2-00006	UXO2_04_T27-2	3.2	10/3/2011	277509.50	3828801.30	No Contact	No Contact	N/A	N/A	N/A	0	0	0	Left in Place	None	
UXO2_04_T27-2-00007	UXO2_04_T27-2	5.1	10/3/2011	277490.20	3828821.20	Cultural Debris	Scrap	N/A	N/A	N/A	1	6	0.1	Scrap Bin	None	Wire
UXO2_04_T27-2-00008	UXO2_04_T27-2	3.1	10/3/2011	277485.00	3828830.60	TBD	TBD	Greater than 2 ft	N/A	N/A	0	0	0	Left in Place	None	
UXO2_04_T28-1-00001	UXO2_04_T28-1	33.6	10/3/2011	277618.90	3828669.00	Cultural Debris	Scrap	N/A	N/A	N/A	1	1	0.1	Scrap Bin	None	Nail

TABLE H-1

MEC Intrusive Investigation Results

Site UXO-02

MCIEAST-MCB CAMLEJ, North Carolina

Anomaly Identification	Grid	Amplitude (millivolts)	Dig Date	Easting (UTM)	Northing (UTM)	Item Group	Item Class	Category	Filler	Fuze	Quantity	Depth (inch)	Weight (pound)	Action Taken	Demolition Required?	Item Comment
UXO2_04_T28-1-00002	UXO2_04_T28-1	3.5	10/3/2011	277560.10	3828750.70	TBD	TBD	Greater than 2 ft	N/A	N/A	0	0	0	Left in Place	None	
UXO2_04_T28-1-00003	UXO2_04_T28-1	95.9	10/3/2011	277549.40	3828762.30	Cultural Debris	Scrap	N/A	N/A	N/A	1	1	0.1	Scrap Bin	None	
UXO2_04_T28-1-00004	UXO2_04_T28-1	162.7	10/3/2011	277548.70	3828763.10	Cultural Debris	Scrap	N/A	N/A	N/A	1	6	0.25	Scrap Bin	None	
UXO2_04_T28-1-00005	UXO2_04_T28-1	3.3	10/3/2011	277490.90	3828836.60	No Contact	No Contact	N/A	N/A	N/A	0	0	0	Left in Place	None	
UXO2_04_T28-2-00001	UXO2_04_T28-2	4.1	10/3/2011	277647.60	3828632.20	Cultural Debris	Scrap	N/A	N/A	N/A	1	3	0.1	Scrap Bin	None	Wire
UXO2_04_T28-2-00002	UXO2_04_T28-2	3.2	10/3/2011	277642.50	3828639.50	No Contact	No Contact	N/A	N/A	N/A	0	0	0	Left in Place	None	
UXO2_04_T28-2-00003	UXO2_04_T28-2	3.0	10/3/2011	277633.00	3828652.50	Cultural Debris	Scrap	N/A	N/A	N/A	1	3	0.1	Scrap Bin	None	Wire
UXO2_04_T28-2-00004	UXO2_04_T28-2	3.6	10/3/2011	277623.20	3828665.50	No Contact	No Contact	N/A	N/A	N/A	0	0	0	Left in Place	None	
UXO2_04_T28-2-00005	UXO2_04_T28-2	4.8	10/3/2011	277615.70	3828675.20	Cultural Debris	Scrap	N/A	N/A	N/A	1	6	0.1	Scrap Bin	None	
UXO2_04_T28-2-00006	UXO2_04_T28-2	3.8	10/3/2011	277614.40	3828676.80	No Contact	No Contact	N/A	N/A	N/A	0	0	0	Left in Place	None	
UXO2_04_T28-2-00007	UXO2_04_T28-2	3.5	10/3/2011	277612.30	3828679.70	No Contact	No Contact	N/A	N/A	N/A	0	0	0	Left in Place	None	
UXO2_04_T28-2-00008	UXO2_04_T28-2	3.3	10/3/2011	277605.80	3828689.90	No Contact	No Contact	N/A	N/A	N/A	0	0	0	Left in Place	None	
UXO2_04_T28-2-00009	UXO2_04_T28-2	4.0	10/3/2011	277603.10	3828694.20	Cultural Debris	Scrap	N/A	N/A	N/A	1	6	0.1	Scrap Bin	None	Wire
UXO2_04_T28-2-00010	UXO2_04_T28-2	3.0	10/3/2011	277598.70	3828700.00	No Contact	No Contact	N/A	N/A	N/A	0	0	0	Left in Place	None	
UXO2_04_T28-2-00011	UXO2_04_T28-2	3.8	10/3/2011	277596.50	3828702.90	Cultural Debris	Scrap	N/A	N/A	N/A	1	3	0.1	Scrap Bin	None	Wire
UXO2_04_T28-2-00012	UXO2_04_T28-2	5.4	10/3/2011	277595.80	3828703.70	Cultural Debris	Scrap	N/A	N/A	N/A	1	6	0.1	Scrap Bin	None	Wire
UXO2_04_T28-2-00013	UXO2_04_T28-2	7.1	10/3/2011	277590.40	3828712.30	Cultural Debris	Scrap	N/A	N/A	N/A	1	6	0.1	Scrap Bin	None	
UXO2_04_T28-2-00014	UXO2_04_T28-2	3.3	10/3/2011	277561.80	3828750.90	No Contact	No Contact	N/A	N/A	N/A	0	0	0	Left in Place	None	
UXO2_04_T28-2-00015	UXO2_04_T28-2	3.6	10/3/2011	277557.50	3828756.20	No Contact	No Contact	N/A	N/A	N/A	0	0	0	Left in Place	None	
UXO2_04_T28-2-00016	UXO2_04_T28-2	4.2	10/3/2011	277555.30	3828758.70	Cultural Debris	Scrap	N/A	N/A	N/A	1	8	0.1	Scrap Bin	None	
UXO2_04_T28-2-00017	UXO2_04_T28-2	3.8	10/3/2011	277554.80	3828759.20	No Contact	No Contact	N/A	N/A	N/A	0	0	0	Left in Place	None	
UXO2_04_T28-2-00018	UXO2_04_T28-2	3.7	10/3/2011	277552.70	3828761.10	Cultural Debris	Scrap	N/A	N/A	N/A	1	6	0.1	Scrap Bin	None	
UXO2_04_T28-2-00019	UXO2_04_T28-2	4.9	10/3/2011	277551.60	3828762.10	Cultural Debris	Scrap	N/A	N/A	N/A	1	6	0.1	Scrap Bin	None	
UXO2_04_T28-2-00020	UXO2_04_T28-2	116.9	10/3/2011	277550.10	3828763.50	Cultural Debris	Scrap	N/A	N/A	N/A	1	6	10	Scrap Bin	None	
UXO2_04_T28-2-00021	UXO2_04_T28-2	52.8	10/3/2011	277549.60	3828764.00	Cultural Debris	Scrap	N/A	N/A	N/A	1	6	0.1	Scrap Bin	None	
UXO2_04_T28-2-00022	UXO2_04_T28-2	7.0	10/3/2011	277547.70	3828766.00	Cultural Debris	Scrap	N/A	N/A	N/A	1	6	0.1	Scrap Bin	None	2-inch x 10-inch scrap
UXO2_04_T28-2-00023	UXO2_04_T28-2	25.2	10/3/2011	277547.20	3828766.80	Cultural Debris	Scrap	N/A	N/A	N/A	1	6	0.1	Scrap Bin	None	2-inch x 10-inch scrap
UXO2_04_T28-2-00024	UXO2_04_T28-2	12643.8	10/3/2011	277545.80	3828769.60	Cultural Debris	Scrap	N/A	N/A	N/A	1	0	10	Scrap Bin	None	
UXO2_04_T28-2-00025	UXO2_04_T28-2	3.5	10/3/2011	277542.90	3828775.30	No Contact	No Contact	N/A	N/A	N/A	0	0	0	Left in Place	None	
UXO2_04_T28-2-00026	UXO2_04_T28-2	3.3	10/3/2011	277518.00	3828802.30	Cultural Debris	Scrap	N/A	N/A	N/A	1	10	0.1	Scrap Bin	None	
UXO2_04_T28-2-00027	UXO2_04_T28-2	3.1	10/3/2011	277517.50	3828803.10	No Contact	No Contact	N/A	N/A	N/A	0	0	0	Left in Place	None	
UXO2_04_T28-2-00028	UXO2_04_T28-2	3.0	10/3/2011	277501.30	3828828.20	No Contact	No Contact	N/A	N/A	N/A	0	0	0	Left in Place	None	
UXO2_04_T28-2-00029	UXO2_04_T28-2	3.1	10/3/2011	277491.80	3828837.70	No Contact	No Contact	N/A	N/A	N/A	0	0	0	Left in Place	None	
UXO2_04_T29-1-00001	UXO2_04_T29-1	14.7	10/3/2011	277625.70	3828677.10	Cultural Debris	Scrap	N/A	N/A	N/A	1	1	0.1	Scrap Bin	None	Nail
UXO2_04_T29-1-00002	UXO2_04_T29-1	12.1	10/3/2011	277618.10	3828687.00	Cultural Debris	Scrap	N/A	N/A	N/A	3	10	0.1	Scrap Bin	None	
UXO2_04_T29-1-00003	UXO2_04_T29-1	3.0	10/3/2011	277504.50	3828835.90	No Contact	No Contact	N/A	N/A	N/A	0	0	0	Left in Place	None	
UXO2_04_T29-2-00001	UXO2_04_T29-2	4.3	10/3/2011	277659.20	3828633.90	Cultural Debris	Scrap	N/A	N/A	N/A	1	1	0.1	Scrap Bin	None	
UXO2_04_T29-2-00002	UXO2_04_T29-2	4.1	10/3/2011	277658.60	3828634.60	Cultural Debris	Scrap	N/A	N/A	N/A	3	10	0.1	Scrap Bin	None	
UXO2_04_T29-2-00003	UXO2_04_T29-2	3.0	10/3/2011	277648.40	3828646.90	Cultural Debris	Scrap	N/A	N/A	N/A	1	3	0.1	Scrap Bin	None	
UXO2_04_T29-2-00004	UXO2_04_T29-2	3.0	10/3/2011	277641.90	3828656.50	No Contact	No Contact	N/A	N/A	N/A	0	0	0	Left in Place	None	
UXO2_04_T29-2-00005	UXO2_04_T29-2	4.0	10/3/2011	277638.70	3828661.10	Cultural Debris	Scrap	N/A	N/A	N/A	1	3	0.1	Scrap Bin	None	Nail
UXO2_04_T29-2-00006	UXO2_04_T29-2	3.3	10/3/2011	277635.60	3828665.50	No Contact	No Contact	N/A	N/A	N/A	0	0	0	Left in Place	None	
UXO2_04_T29-2-00007	UXO2_04_T29-2	5.5	10/3/2011	277619.00	3828687.60	Cultural Debris	Scrap	N/A	N/A	N/A	3	6	0.1	Scrap Bin	None	
UXO2_04_T29-2-00008	UXO2_04_T29-2	3.2	10/3/2011	277611.60	3828697.30	Cultural Debris	Scrap	N/A	N/A	N/A	1	6	0.1	Scrap Bin	None	
UXO2_04_T29-2-00009	UXO2_04_T29-2	3.5	10/3/2011	277540.40	3828788.20	No Contact	No Contact	N/A	N/A	N/A	0	0	0	Left in Place	None	
UXO2_04_T29-2-00010	UXO2_04_T29-2	3.2	10/3/2011	277538.90	3828790.30	No Contact	No Contact	N/A	N/A	N/A	0	0	0	Left in Place	None	
UXO2_04_T29-2-00011	UXO2_04_T29-2	3.7	10/3/2011	277534.30	3828797.00	No Contact	No Contact	N/A	N/A	N/A	0	0	0	Left in Place	None	
UXO2_04_T29-2-00012	UXO2_04_T29-2	3.2	10/3/2011	277523.20	3828814.00	No Contact	No Contact	N/A	N/A	N/A	0	0	0	Left in Place	None	
UXO2_04_T29-2-00013	UXO2_04_T29-2	3.1	10/3/2011	277519.30	3828818.80	No Contact	No Contact	N/A	N/A	N/A	0	0	0	Left in Place	None	
UXO2_04_T29-2-00014	UXO2_04_T29-2	3.2	10/3/2011	277501.70	3828841.70	No Contact	No Contact	N/A	N/A	N/A	0	0	0	Left in Place	None	
UXO2_04_T30-1-00001	UXO2_04_T30-1	32.7	10/3/2011	277629.40	3828688.60	Cultural Debris	Scrap	N/A	N/A	N/A	1	1	0.1	Scrap Bin	None	Nail
UXO2_04_T30-2-00001	UXO2_04_T30-2	3.1	10/3/2011	277666.20	3828641.30	No Contact	No Contact	N/A	N/A	N/A	0	0	0	Left in Place	None	
UXO2_04_T30-2-00002	UXO2_04_T30-2	5.6	10/3/2011	277657.20	3828653.60	Cultural Debris	Scrap	N/A	N/A	N/A	1	1	0.1	Scrap Bin	None	Nail
UXO2_04_T30-2-00003	UXO2_04_T30-2	3.6	10/3/2011	277644.30	3828671.10	Cultural Debris	Scrap	N/A	N/A	N/A	1	6	0.1	Scrap Bin	None	
UXO2_04_T30-2-00004	UXO2_04_T30-2	3.7	10/3/2011	277590.70	3828741.20	Cultural Debris	Scrap	N/A	N/A	N/A	1	6	0.1	Scrap Bin	None	
UXO2_04_T30-2-00005	UXO2_04_T30-2	3.8	10/3/2011	277563.50	3828778.40	Cultural Debris	Scrap	N/A	N/A	N/A	1	6	0.1	Scrap Bin	None	Wire
UXO2_04_T30-2-00006	UXO2_04_T30-2	3.5	10/3/2011	277558.10	3828784.50	No Contact	No Contact	N/A	N/A	N/A	0	0	0	Left in Place	None	
UXO2_04_T30-2-00007	UXO2_04_T30-2	4.5	10/3/2011	277554.80	3828795.10	Cultural Debris	Scrap	N/A	N/A	N/A	1	6	0.1	Scrap Bin	None	Wire
UXO2_04_T3-1-00001	UXO2_04_T3-1	9.9	10/2/2011	277357.80	3828599.80	Facility Resource	Facility Resource	Road	N/A	N/A	0	6	0	Left in Place	None	Wire road mesh
UXO2_04_T31-1-00001	UXO2_04_T31-1	4.4	10/4/2011	277667.10	3828655.00	Cultural Debris	Scrap	N/A	N/A	N/A	1	6	0.1	Scrap Bin	None	Wire
UXO2_04_T31-1-00002	UXO2_04_T31-1	39.2	10/3/2011	277652.00	3828676.80	Cultural Debris	Scrap	N/A	N/A	N/A	1	1	0.1	Scrap Bin	None	Nail
UXO2_04_T31-1-00003	UXO2_04_T31-1	869.5	10/3/2011	277620.30	3828717.30	No Contact	No Contact	N/A	N/A	N/A	0	0	0	Left in Place	None	
UXO2_04_T31-1-00004	UXO2_04_T31-1	3.1	10/3/2011	277580.70	3828768.60	No Contact	No Contact	N/A	N/A	N/A	0	0	0	Left in Place	None	
UXO2_04_T31-1-00005	UXO2_04_T31-1	3.3	10/3/2011	277567.30	3828788.00	No Contact	No Contact	N/A	N/A	N/A	0	0	0	Left in Place	None	
UXO2_04_T31-2-00001	UXO2_04_T31-2	5.7	10/3/2011	277667.70	3828656.20	Cultural Debris	Scrap	N/A	N/A	N/A	1	6	0.1	Scrap Bin	None	
UXO2_04_T31-2-00002	UXO2_04_T31-2	3.9	10/3/2011	277658.80	3828668.40	Cultural Debris	Scrap	N/A	N/A	N/A	1	6	0.1	Scrap Bin	None	
UXO2_04_T31-2-00003	UXO2_04_T31-2	4.7	10/3/2011	277634.50	3828700.90	Cultural Debris	Scrap	N/A	N/A	N/A	1	8	0.1	Scrap Bin	None	
UXO2_04_T31-2-00004	UXO2_04_T31-2	3.0	10/3/2011	277619.60	3828719.90	No Contact	No Contact	N/A	N/A	N/A	0	0	0	Left in Place	None	
UXO2_04_T3-2-00001	UXO2_04_T3-2	19.0	10/2/2011	277359.50	3828600.20	Facility Resource	Facility Resource	Road	N/A	N/A	0	6	0	Left in Place	None	Wire road mesh
UXO2_04_T32-1-00001	UXO2_04_T32-1	16.2	10/4/2011	277637.40	3828710.50	Cultural Debris	Scrap	N/A	N/A	N/A	1	1	0.1	Scrap Bin	None	Survey nail
UXO2_04_T32-1-00002	UXO2_04_T32-1	3.3	10/4/2011	277605.40	3828757.50	No Contact	No Contact	N/A	N/A	N/A	0	0	0	Left in Place	None	
UXO2_04_T32-2-00001	UXO2_04_T32-2	4.1	10/4/2011	277690.50	3828639.40	Cultural Debris	Scrap	N/A	N/A	N/A	1	6	0.1	Scrap Bin	None	Wire
UXO2_04_T32-2-00002	UXO2_04_T32-2	3.4	10/4/2011	277690.20	3828639.90	Facility Resource	Survey control point	N/A	N/A	N/A	0	6	0	Left in Place	None	
UXO2_04_T32-2-00003	UXO2_04_T32-2	3.8	10/4/2011	277667.00	3828674.50	Cultural Debris	Scrap	N/A	N/A	N/A	1	6	0.1	Scrap Bin	None	Wire
UXO2_04_T32-2-00004	UXO2_04_T32-2	4.8	10/4/2011	277656.10	3828689.00	Cultural Debris	Scrap	N/A	N/A	N/A	1	6	0.1	Scrap Bin	None	
UXO2_04_T32-2-00005	UXO2_04_T32-2	3.2	10/4/2011	277648.90	3828698.10	No Contact	No Contact	N/A	N/A	N/A	0	0	0	Left in Place	None	
UXO2_04_T32-2-00006	UXO2_04_T32-2	3.1	10/4/2011	277644.20	3828703.70	No Contact	No Contact	N/A	N/A	N/A	0	0	0	Left in Place	None	
UXO2_04_T32-2-00007	UXO2_04_T32-2	21.1	10/4/2011	277638.20	3828711.20	Cultural Debris	Scrap	N/A	N/A	N/A	1	1	0.1	Scrap Bin	None	Survey nail
UXO2_04_T32-2-00008	UXO2_04_T32-2	3.6	10/4/2011	277623.90	3828732.20	No Contact	No Contact	N/A	N/A	N/A	0	0	0	Left in Place	None	

TABLE H-1

MEC Intrusive Investigation Results

Site UXO-02

MCIEAST-MCB CAMLEJ, North Carolina

Anomaly Identification	Grid	Amplitude (millivolts)	Dig Date	Easting (UTM)	Northing (UTM)	Item Group	Item Class	Category	Filler	Fuze	Quantity	Depth (inch)	Weight (pound)	Action Taken	Demolition Required?	Item Comment
UXO2_04_T33-1-00001	UXO2_04_T33-1	9.2	10/4/2011	277690.40	3828659.50	Cultural Debris	Scrap	N/A	N/A	N/A	1	6	0.25	Scrap Bin	None	Bolt
UXO2_04_T33-1-00002	UXO2_04_T33-1	3.9	10/4/2011	277669.10	3828684.80	No Contact	No Contact	N/A	N/A	N/A	0	0	0	Left in Place	None	
UXO2_04_T33-2-00001	UXO2_04_T33-2	4.1	10/4/2011	277702.30	3828644.00	Cultural Debris	Scrap	N/A	N/A	N/A	1	6	0.1	Scrap Bin	None	
UXO2_04_T33-2-00002	UXO2_04_T33-2	3.0	10/4/2011	277688.40	3828663.30	No Contact	No Contact	N/A	N/A	N/A	0	0	0	Left in Place	None	
UXO2_04_T33-2-00003	UXO2_04_T33-2	5.5	10/4/2011	277681.40	3828671.10	Cultural Debris	Scrap	N/A	N/A	N/A	1	6	0.1	Scrap Bin	None	
UXO2_04_T33-2-00004	UXO2_04_T33-2	4.2	10/4/2011	277675.80	3828676.90	Cultural Debris	Scrap	N/A	N/A	N/A	1	6	0.1	Scrap Bin	None	
UXO2_04_T33-2-00005	UXO2_04_T33-2	3.1	10/4/2011	277670.50	3828684.80	Facility Resource	Survey control point	N/A	N/A	N/A	0	6	0	Left in Place	None	
UXO2_04_T33-2-00006	UXO2_04_T33-2	3.3	10/4/2011	277670.00	3828685.60	No Contact	No Contact	N/A	N/A	N/A	0	0	0	Left in Place	None	
UXO2_04_T33-2-00007	UXO2_04_T33-2	3.1	10/4/2011	277664.00	3828694.30	No Contact	No Contact	N/A	N/A	N/A	0	0	0	Left in Place	None	
UXO2_04_T33-2-00008	UXO2_04_T33-2	3.0	10/4/2011	277656.00	3828704.50	No Contact	No Contact	N/A	N/A	N/A	0	0	0	Left in Place	None	
UXO2_04_T33-2-00009	UXO2_04_T33-2	4.3	10/4/2011	277654.90	3828705.90	Cultural Debris	Scrap	N/A	N/A	N/A	1	1	0.1	Scrap Bin	None	Nail
UXO2_04_T33-2-00010	UXO2_04_T33-2	3.2	10/4/2011	277653.20	3828707.80	No Contact	No Contact	N/A	N/A	N/A	0	0	0	Left in Place	None	
UXO2_04_T33-2-00011	UXO2_04_T33-2	3.4	10/4/2011	277644.00	3828719.60	No Contact	No Contact	N/A	N/A	N/A	0	0	0	Left in Place	None	
UXO2_04_T33-2-00012	UXO2_04_T33-2	3.2	10/4/2011	277636.90	3828729.70	No Contact	No Contact	N/A	N/A	N/A	0	0	0	Left in Place	None	
UXO2_04_T34-1-00001	UXO2_04_T34-1	3.4	10/4/2011	277660.80	3828712.20	No Contact	No Contact	N/A	N/A	N/A	0	0	0	Left in Place	None	
UXO2_04_T34-2-00001	UXO2_04_T34-2	4.1	10/4/2011	277714.40	3828644.30	Cultural Debris	Scrap	N/A	N/A	N/A	1	6	0.1	Scrap Bin	None	
UXO2_04_T34-2-00002	UXO2_04_T34-2	3.5	10/4/2011	277713.50	3828645.50	No Contact	No Contact	N/A	N/A	N/A	0	0	0	Left in Place	None	
UXO2_04_T34-2-00003	UXO2_04_T34-2	3.3	10/4/2011	277706.50	3828654.60	No Contact	No Contact	N/A	N/A	N/A	0	0	0	Left in Place	None	
UXO2_04_T34-2-00004	UXO2_04_T34-2	3.5	10/4/2011	277693.80	3828670.90	Cultural Debris	Scrap	N/A	N/A	N/A	1	6	0.1	Scrap Bin	None	
UXO2_04_T34-2-00005	UXO2_04_T34-2	3.1	10/4/2011	277679.30	3828690.70	No Contact	No Contact	N/A	N/A	N/A	0	0	0	Left in Place	None	
UXO2_04_T34-2-00006	UXO2_04_T34-2	3.2	10/4/2011	277674.60	3828697.00	No Contact	No Contact	N/A	N/A	N/A	0	0	0	Left in Place	None	
UXO2_04_T35-1-00001	UXO2_04_T35-1	3.3	10/4/2011	277678.20	3828702.00	No Contact	No Contact	N/A	N/A	N/A	0	0	0	Left in Place	None	
UXO2_04_T35-2-00001	UXO2_04_T35-2	3.9	10/5/2011	277725.80	3828645.60	Cultural Debris	Scrap	N/A	N/A	N/A	17	5	3	Scrap Bin	None	
UXO2_04_T35-2-00002	UXO2_04_T35-2	6.3	10/5/2011	277717.90	3828657.50	Cultural Debris	Scrap	N/A	N/A	N/A	1	0	2	Scrap Bin	None	
UXO2_04_T35-2-00003	UXO2_04_T35-2	3.1	10/5/2011	277715.70	3828660.60	No Contact	No Contact	N/A	N/A	N/A	0	0	0	Left in Place	None	
UXO2_04_T35-2-00004	UXO2_04_T35-2	3.0	10/5/2011	277708.60	3828670.60	No Contact	No Contact	N/A	N/A	N/A	0	0	0	Left in Place	None	
UXO2_04_T35-2-00005	UXO2_04_T35-2	3.2	10/5/2011	277692.70	3828689.60	No Contact	No Contact	N/A	N/A	N/A	0	0	0	Left in Place	None	
UXO2_04_T35-2-00006	UXO2_04_T35-2	3.1	10/5/2011	277681.80	3828701.20	Cultural Debris	Scrap	N/A	N/A	N/A	1	8	0.1	Scrap Bin	None	Alum can
UXO2_04_T36-1-00001	UXO2_04_T36-1	11.0	10/5/2011	277706.00	3828683.80	QC	QC Seed	QC Seed	N/A	N/A	1	6	0.25	Consolidation Point	None	QC Seed #07
UXO2_04_T36-2-00001	UXO2_04_T36-2	4.0	10/5/2011	277735.70	3828647.20	Cultural Debris	Scrap	N/A	N/A	N/A	1	6	0.1	Scrap Bin	None	
UXO2_04_T36-2-00002	UXO2_04_T36-2	3.1	10/5/2011	277734.90	3828648.20	Cultural Debris	Scrap	N/A	N/A	N/A	1	6	0.1	Scrap Bin	None	
UXO2_04_T36-2-00003	UXO2_04_T36-2	4.2	10/5/2011	277734.00	3828649.60	Cultural Debris	Scrap	N/A	N/A	N/A	1	3	0.25	Scrap Bin	None	
UXO2_04_T36-2-00004	UXO2_04_T36-2	4.0	10/5/2011	277727.90	3828658.00	Cultural Debris	Scrap	N/A	N/A	N/A	2	6	0.1	Scrap Bin	None	
UXO2_04_T36-2-00005	UXO2_04_T36-2	4.3	10/5/2011	277715.10	3828674.80	Cultural Debris	Scrap	N/A	N/A	N/A	1	6	0.1	Scrap Bin	None	
UXO2_04_T36-2-00006	UXO2_04_T36-2	3.2	10/5/2011	277707.70	3828683.70	Cultural Debris	Scrap	N/A	N/A	N/A	1	6	0.1	Scrap Bin	None	
UXO2_04_T36-2-00007	UXO2_04_T36-2	5.3	10/5/2011	277706.60	3828684.90	Cultural Debris	Scrap	N/A	N/A	N/A	1	3	0.25	Scrap Bin	None	
UXO2_04_T37-2-00001	UXO2_04_T37-2	4.1	10/5/2011	277748.90	3828650.90	Cultural Debris	Scrap	N/A	N/A	N/A	1	0	2	Scrap Bin	None	
UXO2_04_T4-1-00001	UXO2_04_T4-1	15.6	10/2/2011	277371.50	3828601.00	Cultural Debris	Scrap	N/A	N/A	N/A	1	6	0.25	Scrap Bin	None	
UXO2_04_T4-1-00002	UXO2_04_T4-1	6.2	10/2/2011	277369.80	3828602.30	Cultural Debris	Scrap	N/A	N/A	N/A	1	3	0.1	Scrap Bin	None	
UXO2_04_T4-2-00001	UXO2_04_T4-2	6.5	10/2/2011	277373.20	3828601.40	Cultural Debris	Scrap	N/A	N/A	N/A	1	3	0.1	Scrap Bin	None	
UXO2_04_T4-2-00002	UXO2_04_T4-2	4.1	10/2/2011	277371.30	3828602.90	Cultural Debris	Scrap	N/A	N/A	N/A	1	3	0.1	Scrap Bin	None	
UXO2_04_T4-2-00003	UXO2_04_T4-2	5.0	10/4/2011	277317.40	3828669.20	No Contact	No Contact	N/A	N/A	N/A	0	0	0	Left in Place	None	
UXO2_04_T4-2-00004	UXO2_04_T4-2	3.7	10/2/2011	277306.60	3828682.90	Cultural Debris	Scrap	N/A	N/A	N/A	1	3	0.1	Scrap Bin	None	
UXO2_04_T5-1-00001	UXO2_04_T5-1	19.2	10/2/2011	277381.60	3828601.40	Facility Resource	Facility Resource	Road	N/A	N/A	0	6	0	Left in Place	None	Wire road mesh
UXO2_04_T5-1-00002	UXO2_04_T5-1	166.2	10/2/2011	277374.60	3828609.20	Cultural Debris	Scrap	N/A	N/A	N/A	1	0	0.1	Scrap Bin	None	Alum can
UXO2_04_T5-2-00001	UXO2_04_T5-2	7.1	10/2/2011	277382.90	3828601.90	Cultural Debris	Scrap	N/A	N/A	N/A	1	6	0.1	Scrap Bin	None	
UXO2_04_T5-2-00002	UXO2_04_T5-2	4.9	10/2/2011	277382.40	3828602.40	Cultural Debris	Scrap	N/A	N/A	N/A	1	3	0.1	Scrap Bin	None	
UXO2_04_T5-2-00003	UXO2_04_T5-2	3.1	10/2/2011	277320.90	3828680.30	No Contact	No Contact	N/A	N/A	N/A	0	0	0	Left in Place	None	
UXO2_04_T5-2-00004	UXO2_04_T5-2	3.4	10/2/2011	277314.40	3828688.00	No Contact	No Contact	N/A	N/A	N/A	0	0	0	Left in Place	None	
UXO2_04_T6-1-00001	UXO2_04_T6-1	10.6	10/2/2011	277395.00	3828602.20	Cultural Debris	Scrap	N/A	N/A	N/A	1	6	0.1	Scrap Bin	None	
UXO2_04_T6-1-00002	UXO2_04_T6-1	5.6	10/2/2011	277394.20	3828603.00	Cultural Debris	Scrap	N/A	N/A	N/A	1	6	0.1	Scrap Bin	None	
UXO2_04_T6-1-00003	UXO2_04_T6-1	40.4	10/2/2011	277391.80	3828605.20	Cultural Debris	Scrap	N/A	N/A	N/A	1	3	0.25	Scrap Bin	None	Alum tube
UXO2_04_T6-2-00001	UXO2_04_T6-2	13.8	10/2/2011	277395.70	3828602.70	Cultural Debris	Scrap	N/A	N/A	N/A	2	6	0.1	Scrap Bin	None	
UXO2_04_T6-2-00002	UXO2_04_T6-2	4.4	10/2/2011	277394.50	3828603.90	No Contact	No Contact	N/A	N/A	N/A	0	0	0	Left in Place	None	
UXO2_04_T6-2-00003	UXO2_04_T6-2	11.7	10/2/2011	277392.20	3828606.10	Cultural Debris	Scrap	N/A	N/A	N/A	1	3	0.25	Scrap Bin	None	Alum tube
UXO2_04_T6-2-00004	UXO2_04_T6-2	3.0	10/2/2011	277376.60	3828624.70	No Contact	No Contact	N/A	N/A	N/A	0	0	0	Left in Place	None	
UXO2_04_T6-2-00005	UXO2_04_T6-2	10.1	10/2/2011	277316.30	3828703.40	Cultural Debris	Scrap	N/A	N/A	N/A	1	1	0.1	Scrap Bin	None	Survey nail
UXO2_04_T7-1-00001	UXO2_04_T7-1	18.7	10/2/2011	277403.60	3828602.80	Cultural Debris	Scrap	N/A	N/A	N/A	2	5	0.1	Scrap Bin	None	
UXO2_04_T7-1-00002	UXO2_04_T7-1	112.3	10/2/2011	277400.40	3828607.30	Cultural Debris	Scrap	N/A	N/A	N/A	1	0	0.25	Scrap Bin	None	
UXO2_04_T7-1-00003	UXO2_04_T7-1	17.7	10/2/2011	277398.90	3828609.50	Cultural Debris	Scrap	N/A	N/A	N/A	1	6	0.2	Scrap Bin	None	
UXO2_04_T7-2-00001	UXO2_04_T7-2	46.9	10/2/2011	277404.70	3828603.10	Cultural Debris	Scrap	N/A	N/A	N/A	1	10	0.25	Scrap Bin	None	
UXO2_04_T8-1-00001	UXO2_04_T8-1	12.1	10/2/2011	277416.20	3828603.10	Cultural Debris	Scrap	N/A	N/A	N/A	1	2	0.1	Scrap Bin	None	
UXO2_04_T8-1-00002	UXO2_04_T8-1	3.6	10/2/2011	277415.50	3828604.10	Cultural Debris	Scrap	N/A	N/A	N/A	2	6	0.1	Scrap Bin	None	
UXO2_04_T8-1-00003	UXO2_04_T8-1	74.7	10/2/2011	277413.50	3828606.90	Cultural Debris	Scrap	N/A	N/A	N/A	1	3	1	Scrap Bin	None	
UXO2_04_T8-1-00004	UXO2_04_T8-1	287.1	10/2/2011	277412.10	3828608.80	RRD	Ammo Can	N/A	Empty	N/A	1	0	1.25	Consolidation Point	Demil	
UXO2_04_T8-2-00001	UXO2_04_T8-2	13.3	10/2/2011	277417.20	3828603.50	Cultural Debris	Scrap	N/A	N/A	N/A	1	6	0.1	Scrap Bin	None	
UXO2_04_T8-2-00002	UXO2_04_T8-2	3.7	10/2/2011	277416.60	3828604.30	Cultural Debris	Scrap	N/A	N/A	N/A	1	3	0.1	Scrap Bin	None	Wire
UXO2_04_T8-2-00003	UXO2_04_T8-2	234.8	10/2/2011	277413.10	3828609.40	RRD	Ammo Can	N/A	Empty	N/A	1	3	1	Consolidation Point	Demil	
UXO2_04_T9-1-00001	UXO2_04_T9-1	6.6	10/2/2011	277428.40	3828602.50	Cultural Debris	Scrap	N/A	N/A	N/A	1	3	0.1	Scrap Bin	None	
UXO2_04_T9-1-00002	UXO2_04_T9-1	3.0	10/2/2011	277338.60	3828721.70	No Contact	No Contact	N/A	N/A	N/A	0	0	0	Left in Place	None	
UXO2_04_T9-2-00001	UXO2_04_T9-2	12.9	10/2/2011	277429.10	3828603.60	Cultural Debris	Scrap	N/A	N/A	N/A	1	3	0.1	Scrap Bin	None	Wire
UXO2_04_T9-2-00002	UXO2_04_T9-2	43.7	10/2/2011	277427.50	3828606.50	Cultural Debris	Scrap	N/A	N/A	N/A	1	1	0.1	Scrap Bin	None	Survey nail
UXO2_2_T17-1-00001	UXO2_2_T17-1	3.1	10/5/2011	277275.30	3828970.30	No Contact	No Contact	N/A	N/A	N/A	0	0	0	Left in Place	None	
UXO2_2_T17-1-00002	UXO2_2_T17-1	4.2	10/5/2011	277198.00	3829072.80	Cultural Debris	Scrap	N/A	N/A	N/A	1	2	0.1	Scrap Bin	None	Nail
UXO2_2_T18-1-00001	UXO2_2_T18-1	3.2	10/5/2011	277282.90	3828975.70	No Contact	No Contact	N/A	N/A	N/A	0	0	0	Left in Place	None	
UXO2_2_T18-1-00002	UXO2_2_T18-1	4.9	10/5/2011	277224.70	3829053.60	Cultural Debris	Scrap	N/A	N/A	N/A	1	4	0.2	Scrap Bin	None	
UXO2_2_T18-1-00003	UXO2_2_T18-1	22.8	10/5/2011	277201.60	3829083.80	QC	QC Seed	QC Seed	N/A	N/A	1	6	0.25	Consolidation Point	None	QC Seed #09
UXO2_2_T18-2-00001	UXO2_2_T18-2	6.9	10/5/2011	277196.10	3829089.50	Cultural Debris	Scrap	N/A	N/A	N/A	1	6	0.2	Scrap Bin	None	
UXO2_2_T19-1-00001	UXO2_2_T19-1	3.6	10/5/2011	277299.10	3828974.00	Cultural Debris	Scrap	N/A	N/A	N/A	1	8	0.5	Scrap Bin	None	

TABLE H-1

MEC Intrusive Investigation Results

Site UXO-02

MCIEAST-MCB CAMLEJ, North Carolina

Anomaly Identification	Grid	Amplitude (millivolts)	Dig Date	Easting (UTM)	Northing (UTM)	Item Group	Item Class	Category	Filler	Fuze	Quantity	Depth (inch)	Weight (pound)	Action Taken	Demolition Required?	Item Comment
UXO2_2_T19-1-00002	UXO2_2_T19-1	218.7	10/5/2011	277283.60	3828991.10	Cultural Debris	Scrap	N/A	N/A	N/A	1	2	3	Scrap Bin	None	
UXO2_2_T19-1-00003	UXO2_2_T19-1	4.1	10/5/2011	277279.20	3828996.10	Cultural Debris	Scrap	N/A	N/A	N/A	1	6	0.1	Scrap Bin	None	
UXO2_2_T19-1-00004	UXO2_2_T19-1	3.1	10/5/2011	277271.10	3829006.80	No Contact	No Contact	N/A	N/A	N/A	0	0	0	Left in Place	None	
UXO2_2_T19-1-00005	UXO2_2_T19-1	4.3	10/5/2011	277221.00	3829073.50	No Contact	No Contact	N/A	N/A	N/A	0	0	0	Left in Place	None	
UXO2_2_T19-1-00006	UXO2_2_T19-1	4.5	10/5/2011	277204.60	3829097.20	No Contact	No Contact	N/A	N/A	N/A	0	0	0	Left in Place	None	
UXO2_2_T19-2-00001	UXO2_2_T19-2	4.1	10/5/2011	277206.80	3829095.80	Cultural Debris	Scrap	N/A	N/A	N/A	1	3	0.1	Scrap Bin	None	
UXO2_2_T20-1-00001	UXO2_2_T20-1	4.4	10/6/2011	277311.40	3828972.20	Cultural Debris	Scrap	N/A	N/A	N/A	1	4	0.1	Scrap Bin	None	
UXO2_2_T20-1-00002	UXO2_2_T20-1	3.1	10/6/2011	277300.60	3828987.70	No Contact	No Contact	N/A	N/A	N/A	0	0	0	Left in Place	None	
UXO2_2_T20-1-00003	UXO2_2_T20-1	3.1	10/6/2011	277289.50	3829002.70	No Contact	No Contact	N/A	N/A	N/A	0	0	0	Left in Place	None	
UXO2_2_T20-1-00004	UXO2_2_T20-1	4.9	10/6/2011	277258.10	3829042.40	Cultural Debris	Scrap	N/A	N/A	N/A	1	3	0.2	Scrap Bin	None	
UXO2_2_T20-1-00005	UXO2_2_T20-1	3.8	10/6/2011	277246.30	3829059.20	Cultural Debris	Scrap	N/A	N/A	N/A	1	5	0.1	Scrap Bin	None	
UXO2_2_T20-1-00006	UXO2_2_T20-1	11.5	10/6/2011	277216.80	3829099.70	Cultural Debris	Scrap	N/A	N/A	N/A	2	6	0.4	Scrap Bin	None	
UXO2_2_T20-1-00007	UXO2_2_T20-1	3.5	10/6/2011	277179.20	3829147.00	No Contact	No Contact	N/A	N/A	N/A	0	0	0	Left in Place	None	
UXO2_2_T20-1-00008	UXO2_2_T20-1	4.5	10/6/2011	277177.10	3829150.40	Cultural Debris	Scrap	N/A	N/A	N/A	1	4	0.2	Scrap Bin	None	
UXO2_2_T20-2-00001	UXO2_2_T20-2	24.7	10/6/2011	277266.00	3829038.20	QC	QC Seed	QC Seed	N/A	N/A	1	6	0.25	Consolidation Point	None	QC Seed #10
UXO2_2_T20-2-00002	UXO2_2_T20-2	4.6	10/6/2011	277215.70	3829102.90	Cultural Debris	Scrap	N/A	N/A	N/A	1	6	0.2	Scrap Bin	None	
UXO2_2_T21-1-00001	UXO2_2_T21-1	46.5	10/6/2011	277181.80	3829157.30	QC	QC Seed	QC Seed	N/A	N/A	1	6	0.25	Consolidation Point	None	QC Seed #11
UXO2_2_T21-2-00001	UXO2_2_T21-2	3.2	10/6/2011	277194.70	3829144.30	Cultural Debris	Scrap	N/A	N/A	N/A	1	4	0.1	Scrap Bin	None	
UXO2_2_T22-1-00001	UXO2_2_T22-1	3.1	10/6/2011	277331.40	3828977.80	No Contact	No Contact	N/A	N/A	N/A	0	0	0	Left in Place	None	
UXO2_2_T22-1-00002	UXO2_2_T22-1	3.5	10/6/2011	277306.60	3829010.50	No Contact	No Contact	N/A	N/A	N/A	0	0	0	Left in Place	None	
UXO2_2_T22-1-00003	UXO2_2_T22-1	6.0	10/6/2011	277294.20	3829030.10	Cultural Debris	Scrap	N/A	N/A	N/A	1	6	0.2	Scrap Bin	None	
UXO2_2_T22-1-00004	UXO2_2_T22-1	4.3	10/6/2011	277281.50	3829045.30	Cultural Debris	Scrap	N/A	N/A	N/A	1	8	0.1	Scrap Bin	None	
UXO2_2_T22-1-00005	UXO2_2_T22-1	3.5	10/6/2011	277260.40	3829073.50	No Contact	No Contact	N/A	N/A	N/A	0	0	0	Left in Place	None	
UXO2_2_T22-1-00006	UXO2_2_T22-1	3.4	10/6/2011	277254.80	3829085.40	No Contact	No Contact	N/A	N/A	N/A	0	0	0	Left in Place	None	
UXO2_2_T22-1-00007	UXO2_2_T22-1	3.1	10/6/2011	277235.90	3829104.70	No Contact	No Contact	N/A	N/A	N/A	0	0	0	Left in Place	None	
UXO2_2_T22-1-00008	UXO2_2_T22-1	4.5	10/6/2011	277233.90	3829107.80	Cultural Debris	Scrap	N/A	N/A	N/A	1	2	0.2	Scrap Bin	None	Nail
UXO2_2_T22-1-00009	UXO2_2_T22-1	4.8	10/6/2011	277224.60	3829116.90	Cultural Debris	Scrap	N/A	N/A	N/A	1	4	0.1	Scrap Bin	None	
UXO2_2_T22-1-00010	UXO2_2_T22-1	3.2	10/6/2011	277208.20	3829144.20	No Contact	No Contact	N/A	N/A	N/A	0	0	0	Left in Place	None	
UXO2_2_T22-1-00011	UXO2_2_T22-1	6.2	10/6/2011	277197.10	3829163.60	Cultural Debris	Scrap	N/A	N/A	N/A	1	8	0.1	Scrap Bin	None	
UXO2_2_T22-1-00012	UXO2_2_T22-1	3.5	10/6/2011	277191.80	3829164.80	No Contact	No Contact	N/A	N/A	N/A	0	0	0	Left in Place	None	
UXO2_2_T22-1-00013	UXO2_2_T22-1	3.3	10/6/2011	277181.90	3829174.70	No Contact	No Contact	N/A	N/A	N/A	0	0	0	Left in Place	None	
UXO2_2_T22-2-00001	UXO2_2_T22-2	16.1	10/6/2011	277236.70	3829106.20	Cultural Debris	Scrap	N/A	N/A	N/A	1	6	0.6	Scrap Bin	None	
UXO2_2_T22-2-00002	UXO2_2_T22-2	20.1	10/6/2011	277235.70	3829107.90	Cultural Debris	Scrap	N/A	N/A	N/A	1	4	0.3	Scrap Bin	None	
UXO2_2_T22-2-00003	UXO2_2_T22-2	6.1	10/6/2011	277198.00	3829164.80	Cultural Debris	Scrap	N/A	N/A	N/A	1	3	0.2	Scrap Bin	None	
UXO2_2_T23-1-00001	UXO2_2_T23-1	3.5	10/6/2011	277341.50	3828981.90	No Contact	No Contact	N/A	N/A	N/A	0	0	0	Left in Place	None	
UXO2_2_T23-1-00002	UXO2_2_T23-1	8.0	10/6/2011	277325.60	3829004.30	Cultural Debris	Scrap	N/A	N/A	N/A	1	3	0.2	Scrap Bin	None	
UXO2_2_T23-1-00003	UXO2_2_T23-1	3.3	10/6/2011	277307.00	3829025.40	No Contact	No Contact	N/A	N/A	N/A	0	0	0	Left in Place	None	
UXO2_2_T23-1-00004	UXO2_2_T23-1	3.3	10/6/2011	277305.40	3829026.80	No Contact	No Contact	N/A	N/A	N/A	0	0	0	Left in Place	None	
UXO2_2_T23-1-00005	UXO2_2_T23-1	3.5	10/6/2011	277294.30	3829043.90	Cultural Debris	Scrap	N/A	N/A	N/A	1	4	0.1	Scrap Bin	None	
UXO2_2_T23-1-00006	UXO2_2_T23-1	3.4	10/6/2011	277290.40	3829049.20	Cultural Debris	Scrap	N/A	N/A	N/A	1	2	0.1	Scrap Bin	None	
UXO2_2_T23-1-00007	UXO2_2_T23-1	4.0	10/6/2011	277237.90	3829120.10	Cultural Debris	Scrap	N/A	N/A	N/A	1	6	0.2	Scrap Bin	None	
UXO2_2_T23-1-00008	UXO2_2_T23-1	4.0	10/6/2011	277220.70	3829140.70	Cultural Debris	Scrap	N/A	N/A	N/A	1	8	0.1	Scrap Bin	None	
UXO2_2_T23-1-00009	UXO2_2_T23-1	4.3	10/6/2011	277191.90	3829178.40	Cultural Debris	Scrap	N/A	N/A	N/A	1	6	0.1	Scrap Bin	None	
UXO2_2_T23-2-00001	UXO2_2_T23-2	19.9	10/6/2011	277274.40	3829074.10	Cultural Debris	Scrap	N/A	N/A	N/A	1	1	0.2	Scrap Bin	None	Nail
UXO2_2_T23-2-00002	UXO2_2_T23-2	12.5	10/6/2011	277251.30	3829105.70	Cultural Debris	Scrap	N/A	N/A	N/A	1	6	0.2	Scrap Bin	None	
UXO2_2_T23-2-00003	UXO2_2_T23-2	31.2	10/6/2011	277221.50	3829141.50	Cultural Debris	Scrap	N/A	N/A	N/A	1	3	0.5	Scrap Bin	None	
UXO2_2_T24-1-00001	UXO2_2_T24-1	3.7	10/6/2011	277353.60	3828984.20	Cultural Debris	Scrap	N/A	N/A	N/A	1	4	0.1	Scrap Bin	None	
UXO2_2_T24-1-00002	UXO2_2_T24-1	3.6	10/6/2011	277345.00	3828993.80	No Contact	No Contact	N/A	N/A	N/A	0	0	0	Left in Place	None	
UXO2_2_T24-1-00003	UXO2_2_T24-1	3.3	10/6/2011	277314.60	3829035.50	TBD	TBD	Other (see comments)	N/A	N/A	0	0	0	Left in Place	None	Blocked by dead fall
UXO2_2_T24-1-00004	UXO2_2_T24-1	3.6	10/6/2011	277278.60	3829084.40	Cultural Debris	Scrap	N/A	N/A	N/A	1	8	0.1	Scrap Bin	None	
UXO2_2_T24-1-00005	UXO2_2_T24-1	15.8	10/6/2011	277262.80	3829102.70	Cultural Debris	Scrap	N/A	N/A	N/A	1	8	4	Scrap Bin	None	
UXO2_2_T24-1-00006	UXO2_2_T24-1	3.3	10/6/2011	277253.80	3829114.70	Cultural Debris	Scrap	N/A	N/A	N/A	1	2	0.2	Scrap Bin	None	
UXO2_2_T24-1-00007	UXO2_2_T24-1	3.7	10/6/2011	277217.00	3829160.00	No Contact	No Contact	N/A	N/A	N/A	0	0	0	Left in Place	None	
UXO2_2_T24-1-00008	UXO2_2_T24-1	3.4	10/6/2011	277213.60	3829165.50	No Contact	No Contact	N/A	N/A	N/A	0	0	0	Left in Place	None	
UXO2_2_T24-1-00009	UXO2_2_T24-1	5.7	10/6/2011	277209.10	3829171.70	Cultural Debris	Scrap	N/A	N/A	N/A	1	6	0.1	Scrap Bin	None	
UXO2_2_T24-1-00010	UXO2_2_T24-1	3.1	10/6/2011	277191.50	3829191.30	No Contact	No Contact	N/A	N/A	N/A	0	0	0	Left in Place	None	
UXO2_2_T24-2-00001	UXO2_2_T24-2	3.7	10/6/2011	277340.30	3829003.90	Cultural Debris	Scrap	N/A	N/A	N/A	1	2	6	Scrap Bin	None	
UXO2_2_T24-2-00002	UXO2_2_T24-2	3.1	10/6/2011	277192.30	3829193.00	No Contact	No Contact	N/A	N/A	N/A	0	0	0	Left in Place	None	
UXO2_2_T25-1-00001	UXO2_2_T25-1	4.0	10/6/2011	277360.30	3828987.70	Cultural Debris	Scrap	N/A	N/A	N/A	1	4	0.2	Scrap Bin	None	
UXO2_2_T25-1-00002	UXO2_2_T25-1	3.4	10/6/2011	277318.90	3829043.00	Cultural Debris	Scrap	N/A	N/A	N/A	1	6	0.1	Scrap Bin	None	Nail
UXO2_2_T25-1-00003	UXO2_2_T25-1	4.6	10/6/2011	277288.60	3829084.90	Cultural Debris	Scrap	N/A	N/A	N/A	1	8	0.1	Scrap Bin	None	
UXO2_2_T25-1-00004	UXO2_2_T25-1	4.2	10/6/2011	277261.20	3829120.50	Cultural Debris	Scrap	N/A	N/A	N/A	1	5	0.1	Scrap Bin	None	
UXO2_2_T25-1-00005	UXO2_2_T25-1	4.4	10/6/2011	277259.90	3829122.10	Cultural Debris	Scrap	N/A	N/A	N/A	1	6	0.1	Scrap Bin	None	
UXO2_2_T25-1-00006	UXO2_2_T25-1	3.6	10/6/2011	277259.30	3829122.90	No Contact	No Contact	N/A	N/A	N/A	0	0	0	Left in Place	None	
UXO2_2_T25-1-00007	UXO2_2_T25-1	3.1	10/6/2011	277257.50	3829125.30	No Contact	No Contact	N/A	N/A	N/A	0	0	0	Left in Place	None	
UXO2_2_T25-1-00008	UXO2_2_T25-1	3.4	10/6/2011	277205.60	3829195.90	No Contact	No Contact	N/A	N/A	N/A	0	0	0	Left in Place	None	
UXO2_2_T25-1-00009	UXO2_2_T25-1	3.5	10/6/2011	277205.10	3829196.30	No Contact	No Contact	N/A	N/A	N/A	0	0	0	Left in Place	None	
UXO2_2_T25-1-00010	UXO2_2_T25-1	21.4	10/6/2011	277201.20	3829199.60	Cultural Debris	Scrap	N/A	N/A	N/A	2	2	0.4	Scrap Bin	None	
UXO2_2_T25-2-00001	UXO2_2_T25-2	4.8	10/6/2011	277350.00	3829009.40	Cultural Debris	Scrap	N/A	N/A	N/A	1	6	0.1	Scrap Bin	None	Nail
UXO2_2_T25-2-00002	UXO2_2_T25-2	7.5	10/6/2011	277268.70	3829113.70	Cultural Debris	Scrap	N/A	N/A	N/A	1	4	0.2	Scrap Bin	None	
UXO2_2_T25-2-00003	UXO2_2_T25-2	3.1	10/6/2011	277267.00	3829116.00	Cultural Debris	Scrap	N/A	N/A	N/A	4	12	0.8	Scrap Bin	None	
UXO2_2_T26-1-00001	UXO2_2_T26-1	3.7	10/6/2011	277376.10	3828988.50	No Contact	No Contact	N/A	N/A	N/A	0	0	0	Left in Place	None	
UXO2_2_T26-1-00002	UXO2_2_T26-1	3.5	10/6/2011	277373.30	3828992.50	No Contact	No Contact	N/A	N/A	N/A	0	0	0	Left in Place	None	
UXO2_2_T26-1-00003	UXO2_2_T26-1	3.0	10/6/2011	277372.60	3828993.40	No Contact	No Contact	N/A	N/A	N/A	0	0	0	Left in Place	None	
UXO2_2_T26-1-00004	UXO2_2_T26-1	3.7	10/6/2011	277367.80	3829000.20	No Contact	No Contact	N/A	N/A	N/A	0	0	0	Left in Place	None	
UXO2_2_T26-1-00005	UXO2_2_T26-1	3.2	10/6/2011	277358.60	3829009.50	No Contact	No Contact	N/A	N/A	N/A	0	0	0	Left in Place	None	
UXO2_2_T26-1-00006	UXO2_2_T26-1	4.0	10/6/2011	277329.40	3829046.20	Cultural Debris	Scrap	N/A	N/A	N/A	1	10	0.2	Scrap Bin	None	
UXO2_2_T26-1-00007	UXO2_2_T26-1	3.0	10/6/2011	277313.20	3829070.40	No Contact	No Contact	N/A	N/A	N/A	0	0	0	Left in Place	None	
UXO2_2_T26-1-00008	UXO2_2_T26-1	3.5	10/6/2011	277298.90	3829088.80	No Contact	No Contact	N/A	N/A	N/A	0	0	0	Left in Place	None	

TABLE H-1

MEC Intrusive Investigation Results

Site UXO-02

MCIEAST-MCB CAMLEJ, North Carolina

Anomaly Identification	Grid	Amplitude (millivolts)	Dig Date	Easting (UTM)	Northing (UTM)	Item Group	Item Class	Category	Filler	Fuze	Quantity	Depth (inch)	Weight (pound)	Action Taken	Demolition Required?	Item Comment
UXO2_2_T26-1-00009	UXO2_2_T26-1	4.1	10/6/2011	277250.70	3829151.90	Cultural Debris	Scrap	N/A	N/A	N/A	1	4	0.1	Scrap Bin	None	
UXO2_2_T26-1-00010	UXO2_2_T26-1	3.7	10/6/2011	277250.20	3829153.10	No Contact	No Contact	N/A	N/A	N/A	0	0	0	Left in Place	None	
UXO2_2_T26-1-00011	UXO2_2_T26-1	3.4	10/6/2011	277232.30	3829173.90	No Contact	No Contact	N/A	N/A	N/A	0	0	0	Left in Place	None	
UXO2_2_T26-1-00012	UXO2_2_T26-1	3.0	10/6/2011	277228.90	3829179.20	Cultural Debris	Scrap	N/A	N/A	N/A	1	2	0.1	Scrap Bin	None	Wire
UXO2_2_T26-1-00013	UXO2_2_T26-1	3.1	10/6/2011	277199.40	3829215.70	No Contact	No Contact	N/A	N/A	N/A	0	0	0	Left in Place	None	
UXO2_2_T26-2-00001	UXO2_2_T26-2	8.8	10/6/2011	277361.70	3829008.30	Cultural Debris	Scrap	N/A	N/A	N/A	2	4	0.2	Scrap Bin	None	
UXO2_2_T27-1-00001	UXO2_2_T27-1	3.2	10/6/2011	277386.30	3828987.20	No Contact	No Contact	N/A	N/A	N/A	0	0	0	Left in Place	None	
UXO2_2_T27-1-00002	UXO2_2_T27-1	3.2	10/6/2011	277383.20	3828990.60	No Contact	No Contact	N/A	N/A	N/A	0	0	0	Left in Place	None	
UXO2_2_T27-1-00003	UXO2_2_T27-1	3.7	10/6/2011	277382.50	3828991.40	No Contact	No Contact	N/A	N/A	N/A	0	0	0	Left in Place	None	
UXO2_2_T27-1-00004	UXO2_2_T27-1	4.1	10/6/2011	277381.80	3828992.20	Cultural Debris	Scrap	N/A	N/A	N/A	1	2	0.1	Scrap Bin	None	
UXO2_2_T27-1-00005	UXO2_2_T27-1	3.8	10/6/2011	277379.50	3828994.70	No Contact	No Contact	N/A	N/A	N/A	0	0	0	Left in Place	None	
UXO2_2_T27-1-00006	UXO2_2_T27-1	4.3	10/6/2011	277378.50	3828996.00	Cultural Debris	Scrap	N/A	N/A	N/A	1	2	0.2	Scrap Bin	None	
UXO2_2_T27-1-00007	UXO2_2_T27-1	4.0	10/6/2011	277375.80	3829002.90	Cultural Debris	Scrap	N/A	N/A	N/A	2	1	0.2	Scrap Bin	None	
UXO2_2_T27-1-00008	UXO2_2_T27-1	73.3	10/6/2011	277368.60	3829012.90	Cultural Debris	Scrap	N/A	N/A	N/A	1	8	4	Scrap Bin	None	
UXO2_2_T27-1-00009	UXO2_2_T27-1	4.3	10/6/2011	277361.30	3829021.00	Cultural Debris	Scrap	N/A	N/A	N/A	1	6	0.1	Scrap Bin	None	
UXO2_2_T27-1-00010	UXO2_2_T27-1	6.2	10/6/2011	277360.40	3829023.00	Cultural Debris	Scrap	N/A	N/A	N/A	2	4	0.1	Scrap Bin	None	
UXO2_2_T27-1-00011	UXO2_2_T27-1	3.6	10/6/2011	277357.90	3829028.50	No Contact	No Contact	N/A	N/A	N/A	0	0	0	Left in Place	None	
UXO2_2_T27-1-00012	UXO2_2_T27-1	3.6	10/6/2011	277357.20	3829030.10	No Contact	No Contact	N/A	N/A	N/A	0	0	0	Left in Place	None	
UXO2_2_T27-1-00013	UXO2_2_T27-1	3.0	10/6/2011	277345.80	3829041.50	No Contact	No Contact	N/A	N/A	N/A	0	0	0	Left in Place	None	
UXO2_2_T27-1-00014	UXO2_2_T27-1	3.2	10/6/2011	277341.50	3829048.80	No Contact	No Contact	N/A	N/A	N/A	0	0	0	Left in Place	None	
UXO2_2_T27-1-00015	UXO2_2_T27-1	13.7	10/6/2011	277325.60	3829070.20	Cultural Debris	Scrap	N/A	N/A	N/A	1	4	3	Scrap Bin	None	
UXO2_2_T27-1-00016	UXO2_2_T27-1	3.2	10/6/2011	277280.60	3829132.50	No Contact	No Contact	N/A	N/A	N/A	0	0	0	Left in Place	None	
UXO2_2_T27-1-00017	UXO2_2_T27-1	3.2	10/6/2011	277278.70	3829134.90	No Contact	No Contact	N/A	N/A	N/A	0	0	0	Left in Place	None	
UXO2_2_T27-1-00018	UXO2_2_T27-1	3.4	10/6/2011	277263.10	3829149.30	No Contact	No Contact	N/A	N/A	N/A	0	0	0	Left in Place	None	
UXO2_2_T27-1-00019	UXO2_2_T27-1	3.3	10/6/2011	277217.30	3829209.10	No Contact	No Contact	N/A	N/A	N/A	0	0	0	Left in Place	None	
UXO2_2_T27-1-00020	UXO2_2_T27-1	3.1	10/6/2011	277209.80	3829220.90	No Contact	No Contact	N/A	N/A	N/A	0	0	0	Left in Place	None	
UXO2_2_T27-1-00021	UXO2_2_T27-1	3.2	10/6/2011	277206.00	3829224.40	No Contact	No Contact	N/A	N/A	N/A	0	0	0	Left in Place	None	
UXO2_2_T27-1-00022	UXO2_2_T27-1	3.4	10/6/2011	277195.90	3829236.00	No Contact	No Contact	N/A	N/A	N/A	0	0	0	Left in Place	None	
UXO2_2_T27-2-00001	UXO2_2_T27-2	3.3	10/6/2011	277382.30	3828993.40	No Contact	No Contact	N/A	N/A	N/A	0	0	0	Left in Place	None	
UXO2_2_T27-2-00002	UXO2_2_T27-2	4.1	10/6/2011	277381.80	3828993.90	Cultural Debris	Scrap	N/A	N/A	N/A	1	10	0.1	Scrap Bin	None	
UXO2_2_T27-2-00003	UXO2_2_T27-2	3.4	10/6/2011	277376.10	3829006.00	No Contact	No Contact	N/A	N/A	N/A	0	0	0	Left in Place	None	
UXO2_2_T27-2-00004	UXO2_2_T27-2	3.1	10/6/2011	277363.00	3829020.20	No Contact	No Contact	N/A	N/A	N/A	0	0	0	Left in Place	None	
UXO2_2_T27-2-00005	UXO2_2_T27-2	10.0	10/6/2011	277326.60	3829070.70	Cultural Debris	Scrap	N/A	N/A	N/A	2	6	0.4	Scrap Bin	None	
UXO2_2_T27-2-00006	UXO2_2_T27-2	3.4	10/6/2011	277320.70	3829080.50	No Contact	No Contact	N/A	N/A	N/A	0	0	0	Left in Place	None	
UXO2_2_T27-2-00007	UXO2_2_T27-2	3.0	10/6/2011	277315.40	3829088.00	No Contact	No Contact	N/A	N/A	N/A	0	0	0	Left in Place	None	
UXO2_2_T27-2-00008	UXO2_2_T27-2	3.3	10/6/2011	277259.30	3829154.90	No Contact	No Contact	N/A	N/A	N/A	0	0	0	Left in Place	None	
UXO2_2_T27-2-00009	UXO2_2_T27-2	3.9	10/6/2011	277231.40	3829194.80	No Contact	No Contact	N/A	N/A	N/A	0	0	0	Left in Place	None	
UXO2_2_T27-2-00010	UXO2_2_T27-2	3.3	10/7/2011	277227.80	3829198.20	No Contact	No Contact	N/A	N/A	N/A	0	0	0	Left in Place	None	
UXO2_2_T27-2-00011	UXO2_2_T27-2	4.2	10/6/2011	277217.30	3829211.60	Cultural Debris	Scrap	N/A	N/A	N/A	1	6	0.5	Scrap Bin	None	
UXO2_2_T27-2-00012	UXO2_2_T27-2	3.3	10/6/2011	277203.20	3829229.10	No Contact	No Contact	N/A	N/A	N/A	0	0	0	Left in Place	None	
UXO2_2_T27-2-00013	UXO2_2_T27-2	3.2	10/6/2011	277187.00	3829252.10	No Contact	No Contact	N/A	N/A	N/A	0	0	0	Left in Place	None	
UXO2_2_T28-1-00001	UXO2_2_T28-1	3.1	10/7/2011	277398.50	3828996.30	No Contact	No Contact	N/A	N/A	N/A	0	0	0	Left in Place	None	
UXO2_2_T28-1-00002	UXO2_2_T28-1	3.7	10/7/2011	277370.80	3829024.80	No Contact	No Contact	N/A	N/A	N/A	0	0	0	Left in Place	None	
UXO2_2_T28-1-00003	UXO2_2_T28-1	3.5	10/7/2011	277370.00	3829026.20	No Contact	No Contact	N/A	N/A	N/A	0	0	0	Left in Place	None	
UXO2_2_T28-1-00004	UXO2_2_T28-1	3.3	10/7/2011	277358.70	3829043.30	No Contact	No Contact	N/A	N/A	N/A	0	0	0	Left in Place	None	
UXO2_2_T28-1-00005	UXO2_2_T28-1	3.5	10/7/2011	277358.20	3829043.90	No Contact	No Contact	N/A	N/A	N/A	0	0	0	Left in Place	None	
UXO2_2_T28-1-00006	UXO2_2_T28-1	4.0	10/7/2011	277356.30	3829046.20	No Contact	No Contact	N/A	N/A	N/A	0	0	0	Left in Place	None	
UXO2_2_T28-1-00007	UXO2_2_T28-1	3.5	10/7/2011	277351.70	3829051.80	No Contact	No Contact	N/A	N/A	N/A	0	0	0	Left in Place	None	
UXO2_2_T28-1-00008	UXO2_2_T28-1	3.4	10/7/2011	277348.50	3829055.60	No Contact	No Contact	N/A	N/A	N/A	0	0	0	Left in Place	None	
UXO2_2_T28-1-00009	UXO2_2_T28-1	5.4	10/7/2011	277337.00	3829069.50	Cultural Debris	Scrap	N/A	N/A	N/A	1	2	0.5	Scrap Bin	None	Chain
UXO2_2_T28-1-00010	UXO2_2_T28-1	3.8	10/7/2011	277331.40	3829076.10	Cultural Debris	Scrap	N/A	N/A	N/A	1	6	0.1	Scrap Bin	None	
UXO2_2_T28-1-00011	UXO2_2_T28-1	26.6	10/7/2011	277329.40	3829078.40	Cultural Debris	Scrap	N/A	N/A	N/A	1	4	0.5	Scrap Bin	None	
UXO2_2_T28-1-00012	UXO2_2_T28-1	3.8	10/7/2011	277303.70	3829115.70	No Contact	No Contact	N/A	N/A	N/A	0	0	0	Left in Place	None	
UXO2_2_T28-1-00013	UXO2_2_T28-1	3.6	10/7/2011	277295.70	3829125.60	No Contact	No Contact	N/A	N/A	N/A	0	0	0	Left in Place	None	
UXO2_2_T28-1-00014	UXO2_2_T28-1	3.2	10/7/2011	277270.50	3829159.10	No Contact	No Contact	N/A	N/A	N/A	0	0	0	Left in Place	None	
UXO2_2_T28-1-00015	UXO2_2_T28-1	3.2	10/7/2011	277254.50	3829180.90	No Contact	No Contact	N/A	N/A	N/A	0	0	0	Left in Place	None	
UXO2_2_T28-1-00016	UXO2_2_T28-1	3.6	10/7/2011	277246.30	3829188.10	No Contact	No Contact	N/A	N/A	N/A	0	0	0	Left in Place	None	
UXO2_2_T28-1-00017	UXO2_2_T28-1	3.1	10/7/2011	277241.00	3829193.90	No Contact	No Contact	N/A	N/A	N/A	0	0	0	Left in Place	None	
UXO2_2_T28-1-00018	UXO2_2_T28-1	5.2	10/7/2011	277231.40	3829207.10	Cultural Debris	Scrap	N/A	N/A	N/A	1	8	0.1	Scrap Bin	None	
UXO2_2_T28-1-00019	UXO2_2_T28-1	3.2	10/7/2011	277222.30	3829221.20	No Contact	No Contact	N/A	N/A	N/A	0	0	0	Left in Place	None	
UXO2_2_T28-1-00020	UXO2_2_T28-1	4.2	10/7/2011	277220.90	3829222.50	Cultural Debris	Scrap	N/A	N/A	N/A	1	4	0.2	Scrap Bin	None	
UXO2_2_T28-1-00021	UXO2_2_T28-1	3.2	10/7/2011	277220.20	3829223.20	No Contact	No Contact	N/A	N/A	N/A	0	0	0	Left in Place	None	
UXO2_2_T28-1-00022	UXO2_2_T28-1	3.2	10/7/2011	277215.50	3829227.70	No Contact	No Contact	N/A	N/A	N/A	0	0	0	Left in Place	None	
UXO2_2_T28-1-00023	UXO2_2_T28-1	4.7	10/7/2011	277212.10	3829231.00	Cultural Debris	Scrap	N/A	N/A	N/A	1	6	0.1	Scrap Bin	None	
UXO2_2_T28-1-00024	UXO2_2_T28-1	3.3	10/7/2011	277204.80	3829239.30	No Contact	No Contact	N/A	N/A	N/A	0	0	0	Left in Place	None	
UXO2_2_T28-1-00025	UXO2_2_T28-1	4.0	10/7/2011	277203.50	3829240.80	Cultural Debris	Scrap	N/A	N/A	N/A	1	6	0.1	Scrap Bin	None	
UXO2_2_T28-2-00001	UXO2_2_T28-2	30.5	10/7/2011	277337.90	3829070.40	Cultural Debris	Scrap	N/A	N/A	N/A	1	2	0.5	Scrap Bin	None	Chain
UXO2_2_T28-2-00002	UXO2_2_T28-2	22.6	10/7/2011	277330.10	3829079.20	Cultural Debris	Scrap	N/A	N/A	N/A	1	4	0.5	Scrap Bin	None	
UXO2_2_T28-2-00003	UXO2_2_T28-2	3.8	10/7/2011	277329.30	3829080.60	No Contact	No Contact	N/A	N/A	N/A	0	0	0	Left in Place	None	
UXO2_2_T28-2-00004	UXO2_2_T28-2	5.3	10/7/2011	277303.00	3829118.50	Cultural Debris	Scrap	N/A	N/A	N/A	1	8	0.2	Scrap Bin	None	
UXO2_2_T28-2-00005	UXO2_2_T28-2	3.5	10/7/2011	277261.80	3829177.70	No Contact	No Contact	N/A	N/A	N/A	0	0	0	Left in Place	None	
UXO2_2_T28-2-00006	UXO2_2_T28-2	5.6	10/7/2011	277240.70	3829196.30	Cultural Debris	Scrap	N/A	N/A	N/A	1	4	0.2	Scrap Bin	None	
UXO2_2_T29-1-00001	UXO2_2_T29-1	3.0	10/7/2011	277403.90	3829000.00	No Contact	No Contact	N/A	N/A	N/A	0	0	0	Left in Place	None	
UXO2_2_T29-1-00002	UXO2_2_T29-1	3.7	10/7/2011	277396.70	3829009.40	No Contact	No Contact	N/A	N/A	N/A	0	0	0	Left in Place	None	
UXO2_2_T29-1-00003	UXO2_2_T29-1	3.2	10/7/2011	277392.90	3829013.90	No Contact	No Contact	N/A	N/A	N/A	0	0	0	Left in Place	None	
UXO2_2_T29-1-00004	UXO2_2_T29-1	3.9	10/7/2011	277387.00	3829019.30	No Contact	No Contact	N/A	N/A	N/A	0	0	0	Left in Place	None	
UXO2_2_T29-1-00005	UXO2_2_T29-1	4.0	10/7/2011	277382.70	3829026.30	Cultural Debris	Scrap	N/A	N/A	N/A	1	4	0.1	Scrap Bin	None	
UXO2_2_T29-1-00006	UXO2_2_T29-1	4.4	10/7/2011	277372.00	3829040.70	Cultural Debris	Scrap	N/A	N/A	N/A	2	6	0.1	Scrap Bin	None	
UXO2_2_T29-1-00007	UXO2_2_T29-1	4.3	10/7/2011	277339.90	3829083.70	Cultural Debris	Scrap	N/A	N/A	N/A	1	4	0.1	Scrap Bin	None	

TABLE H-1

MEC Intrusive Investigation Results

Site UXO-02

MCIEAST-MCB CAMLEJ, North Carolina

Anomaly Identification	Grid	Amplitude (millivolts)	Dig Date	Easting (UTM)	Northing (UTM)	Item Group	Item Class	Category	Filler	Fuze	Quantity	Depth (inch)	Weight (pound)	Action Taken	Demolition Required?	Item Comment
UXO2_2_T29-1-00008	UXO2_2_T29-1	3.3	10/7/2011	277331.00	3829090.60	No Contact	No Contact	N/A	N/A	N/A	0	0	0	Left in Place	None	
UXO2_2_T29-1-00009	UXO2_2_T29-1	3.1	10/7/2011	277329.90	3829091.50	No Contact	No Contact	N/A	N/A	N/A	0	0	0	Left in Place	None	
UXO2_2_T29-1-00010	UXO2_2_T29-1	5.2	10/7/2011	277326.90	3829098.10	Cultural Debris	Scrap	N/A	N/A	N/A	1	8	0.1	Scrap Bin	None	
UXO2_2_T29-1-00011	UXO2_2_T29-1	28.0	10/7/2011	277322.90	3829106.90	Cultural Debris	Scrap	N/A	N/A	N/A	1	2	0.8	Scrap Bin	None	
UXO2_2_T29-1-00012	UXO2_2_T29-1	3.1	10/7/2011	277306.60	3829128.70	No Contact	No Contact	N/A	N/A	N/A	0	0	0	Left in Place	None	
UXO2_2_T29-1-00013	UXO2_2_T29-1	3.1	10/7/2011	277294.50	3829145.10	Cultural Debris	Scrap	N/A	N/A	N/A	1	4	0.2	Scrap Bin	None	
UXO2_2_T29-1-00014	UXO2_2_T29-1	3.1	10/7/2011	277278.10	3829164.50	No Contact	No Contact	N/A	N/A	N/A	0	0	0	Left in Place	None	
UXO2_2_T29-1-00015	UXO2_2_T29-1	3.5	10/7/2011	277257.20	3829188.30	Cultural Debris	Scrap	N/A	N/A	N/A	1	2	0.2	Scrap Bin	None	
UXO2_2_T29-1-00016	UXO2_2_T29-1	3.7	10/7/2011	277235.90	3829217.70	No Contact	No Contact	N/A	N/A	N/A	0	0	0	Left in Place	None	
UXO2_2_T29-1-00017	UXO2_2_T29-1	33.1	10/7/2011	277232.30	3829224.30	QC	QC Seed	QC Seed	N/A	N/A	1	6	0.25	Consolidation Point	None	QC Seed #12
UXO2_2_T29-1-00018	UXO2_2_T29-1	3.8	10/7/2011	277230.10	3829226.70	No Contact	No Contact	N/A	N/A	N/A	0	0	0	Left in Place	None	
UXO2_2_T29-1-00019	UXO2_2_T29-1	5.2	10/7/2011	277217.90	3829236.60	Cultural Debris	Scrap	N/A	N/A	N/A	1	4	0.2	Scrap Bin	None	
UXO2_2_T29-1-00020	UXO2_2_T29-1	3.5	10/7/2011	277213.10	3829242.40	No Contact	No Contact	N/A	N/A	N/A	0	0	0	Left in Place	None	
UXO2_2_T29-2-00001	UXO2_2_T29-2	3.6	10/7/2011	277391.70	3829016.30	No Contact	No Contact	N/A	N/A	N/A	0	0	0	Left in Place	None	
UXO2_2_T29-2-00002	UXO2_2_T29-2	3.5	10/7/2011	277383.60	3829027.20	No Contact	No Contact	N/A	N/A	N/A	0	0	0	Left in Place	None	
UXO2_2_T29-2-00003	UXO2_2_T29-2	32.0	10/7/2011	277324.00	3829107.40	Cultural Debris	Scrap	N/A	N/A	N/A	1	1	0.8	Scrap Bin	None	
UXO2_2_T29-2-00004	UXO2_2_T29-2	5.3	10/7/2011	277316.50	3829117.50	Cultural Debris	Scrap	N/A	N/A	N/A	1	1	0.25	Scrap Bin	None	
UXO2_2_T29-2-00005	UXO2_2_T29-2	3.7	10/7/2011	277306.30	3829131.20	No Contact	No Contact	N/A	N/A	N/A	0	0	0	Left in Place	None	
UXO2_2_T29-2-00006	UXO2_2_T29-2	3.5	10/7/2011	277249.80	3829200.30	No Contact	No Contact	N/A	N/A	N/A	0	0	0	Left in Place	None	
UXO2_2_T29-2-00007	UXO2_2_T29-2	3.0	10/7/2011	277226.30	3829232.20	No Contact	No Contact	N/A	N/A	N/A	0	0	0	Left in Place	None	
UXO2_2_T29-2-00008	UXO2_2_T29-2	3.6	10/8/2011	277216.50	3829239.30	No Contact	No Contact	N/A	N/A	N/A	0	0	0	Left in Place	None	
UXO2_2_T29-2-00009	UXO2_2_T29-2	3.2	10/7/2011	277215.90	3829240.30	No Contact	No Contact	N/A	N/A	N/A	0	0	0	Left in Place	None	
UXO2_2_T29-2-00010	UXO2_2_T29-2	4.9	10/7/2011	277214.30	3829243.00	Cultural Debris	Scrap	N/A	N/A	N/A	1	8	0.1	Scrap Bin	None	
UXO2_2_T30-1-00001	UXO2_2_T30-1	3.5	10/10/2011	277396.10	3829018.30	No Contact	No Contact	N/A	N/A	N/A	0	0	0	Left in Place	None	
UXO2_2_T30-1-00002	UXO2_2_T30-1	3.2	10/10/2011	277312.80	3829140.40	No Contact	No Contact	N/A	N/A	N/A	0	0	0	Left in Place	None	
UXO2_2_T30-1-00003	UXO2_2_T30-1	4.1	10/10/2011	277312.10	3829141.00	Cultural Debris	Scrap	N/A	N/A	N/A	1	3	0.2	Scrap Bin	None	
UXO2_2_T30-1-00004	UXO2_2_T30-1	3.1	10/10/2011	277264.70	3829195.60	No Contact	No Contact	N/A	N/A	N/A	0	0	0	Left in Place	None	
UXO2_2_T30-1-00005	UXO2_2_T30-1	3.9	10/10/2011	277253.70	3829215.00	No Contact	No Contact	N/A	N/A	N/A	0	0	0	Left in Place	None	
UXO2_2_T30-1-00006	UXO2_2_T30-1	16.5	10/10/2011	277224.00	3829248.60	Cultural Debris	Scrap	N/A	N/A	N/A	2	2	0.4	Scrap Bin	None	
UXO2_2_T30-2-00001	UXO2_2_T30-2	3.3	10/10/2011	277397.60	3829019.50	No Contact	No Contact	N/A	N/A	N/A	0	0	0	Left in Place	None	
UXO2_2_T30-2-00002	UXO2_2_T30-2	114.7	10/10/2011	277308.40	3829145.80	Cultural Debris	Scrap	N/A	N/A	N/A	1	2	4	Scrap Bin	None	
UXO2_2_T30-2-00003	UXO2_2_T30-2	26.9	10/10/2011	277276.80	3829185.20	Cultural Debris	Scrap	N/A	N/A	N/A	3	2	0.6	Scrap Bin	None	
UXO2_2_T31-1-00001	UXO2_2_T31-1	34.0	10/10/2011	277377.50	3829067.60	Cultural Debris	Scrap	N/A	N/A	N/A	8	4	1.6	Scrap Bin	None	
UXO2_2_T31-1-00002	UXO2_2_T31-1	3.7	10/10/2011	277361.20	3829088.00	No Contact	No Contact	N/A	N/A	N/A	0	0	0	Left in Place	None	
UXO2_2_T31-1-00003	UXO2_2_T31-1	7.4	10/10/2011	277353.80	3829095.90	Cultural Debris	Scrap	N/A	N/A	N/A	1	6	0.1	Scrap Bin	None	
UXO2_2_T31-1-00004	UXO2_2_T31-1	3.3	10/10/2011	277351.30	3829100.00	No Contact	No Contact	N/A	N/A	N/A	0	0	0	Left in Place	None	
UXO2_2_T31-1-00005	UXO2_2_T31-1	8.2	10/10/2011	277345.00	3829108.90	Cultural Debris	Scrap	N/A	N/A	N/A	1	8	0.2	Scrap Bin	None	
UXO2_2_T31-1-00006	UXO2_2_T31-1	3.2	10/10/2011	277335.10	3829122.10	Cultural Debris	Scrap	N/A	N/A	N/A	1	1	0.2	Scrap Bin	None	
UXO2_2_T31-1-00007	UXO2_2_T31-1	3.2	10/10/2011	277334.10	3829123.60	No Contact	No Contact	N/A	N/A	N/A	0	0	0	Left in Place	None	
UXO2_2_T31-1-00008	UXO2_2_T31-1	4.0	10/10/2011	277324.00	3829140.50	Cultural Debris	Scrap	N/A	N/A	N/A	1	2	0.1	Scrap Bin	None	
UXO2_2_T31-1-00009	UXO2_2_T31-1	3.2	10/10/2011	277321.60	3829146.30	No Contact	No Contact	N/A	N/A	N/A	0	0	0	Left in Place	None	
UXO2_2_T31-1-00010	UXO2_2_T31-1	3.0	10/10/2011	277319.40	3829148.30	No Contact	No Contact	N/A	N/A	N/A	0	0	0	Left in Place	None	
UXO2_2_T31-1-00011	UXO2_2_T31-1	6.7	10/10/2011	277304.20	3829163.50	Cultural Debris	Scrap	N/A	N/A	N/A	1	3	0.1	Scrap Bin	None	
UXO2_2_T31-1-00012	UXO2_2_T31-1	17.1	10/10/2011	277302.70	3829165.20	Cultural Debris	Scrap	N/A	N/A	N/A	1	3	0.3	Scrap Bin	None	Wire
UXO2_2_T31-1-00013	UXO2_2_T31-1	20.2	10/10/2011	277282.60	3829196.50	Cultural Debris	Scrap	N/A	N/A	N/A	1	4	0.5	Scrap Bin	None	Bolt
UXO2_2_T31-1-00014	UXO2_2_T31-1	3.9	10/10/2011	277280.90	3829200.00	No Contact	No Contact	N/A	N/A	N/A	0	0	0	Left in Place	None	
UXO2_2_T31-1-00015	UXO2_2_T31-1	4.8	10/10/2011	277258.40	3829221.30	Cultural Debris	Scrap	N/A	N/A	N/A	1	8	0.1	Scrap Bin	None	
UXO2_2_T31-1-00016	UXO2_2_T31-1	3.4	10/10/2011	277251.90	3829228.70	No Contact	No Contact	N/A	N/A	N/A	0	0	0	Left in Place	None	
UXO2_2_T31-2-00001	UXO2_2_T31-2	3.9	10/10/2011	277417.40	3829016.70	No Contact	No Contact	N/A	N/A	N/A	0	0	0	Left in Place	None	
UXO2_2_T31-2-00002	UXO2_2_T31-2	4.5	10/10/2011	277378.80	3829068.10	Cultural Debris	Scrap	N/A	N/A	N/A	1	6	0.2	Scrap Bin	None	
UXO2_2_T31-2-00003	UXO2_2_T31-2	34.7	10/10/2011	277346.50	3829109.30	Cultural Debris	Scrap	N/A	N/A	N/A	1	2	2.5	Scrap Bin	None	
UXO2_2_T31-2-00004	UXO2_2_T31-2	3.0	10/10/2011	277344.30	3829112.30	No Contact	No Contact	N/A	N/A	N/A	0	0	0	Left in Place	None	
UXO2_2_T31-2-00005	UXO2_2_T31-2	4.5	10/10/2011	277305.70	3829163.40	Cultural Debris	Scrap	N/A	N/A	N/A	1	4	0.2	Scrap Bin	None	
UXO2_2_T31-2-00006	UXO2_2_T31-2	3.1	10/10/2011	277295.30	3829176.50	No Contact	No Contact	N/A	N/A	N/A	0	0	0	Left in Place	None	
UXO2_2_T31-2-00007	UXO2_2_T31-2	9.1	10/10/2011	277292.20	3829180.90	Cultural Debris	Scrap	N/A	N/A	N/A	1	8	0.2	Scrap Bin	None	
UXO2_2_T31-2-00008	UXO2_2_T31-2	8.7	10/10/2011	277264.00	3829217.30	Cultural Debris	Scrap	N/A	N/A	N/A	1	1	0.1	Scrap Bin	None	Wire
UXO2_2_T31-2-00009	UXO2_2_T31-2	22.1	10/10/2011	277245.80	3829240.40	Cultural Debris	Scrap	N/A	N/A	N/A	1	1	0.1	Scrap Bin	None	Wire
UXO2_2_T32-1-00001	UXO2_2_T32-1	3.2	10/10/2011	277388.40	3829073.20	No Contact	No Contact	N/A	N/A	N/A	0	0	0	Left in Place	None	
UXO2_2_T32-1-00002	UXO2_2_T32-1	3.6	10/10/2011	277353.30	3829118.70	No Contact	No Contact	N/A	N/A	N/A	0	0	0	Left in Place	None	
UXO2_2_T32-1-00003	UXO2_2_T32-1	3.1	10/10/2011	277329.90	3829147.40	No Contact	No Contact	N/A	N/A	N/A	0	0	0	Left in Place	None	
UXO2_2_T32-1-00004	UXO2_2_T32-1	4.1	10/10/2011	277315.50	3829164.20	Cultural Debris	Scrap	N/A	N/A	N/A	1	8	0.1	Scrap Bin	None	
UXO2_2_T32-1-00005	UXO2_2_T32-1	17.6	10/10/2011	277310.30	3829170.20	Cultural Debris	Scrap	N/A	N/A	N/A	2	6	0.4	Scrap Bin	None	
UXO2_2_T32-1-00006	UXO2_2_T32-1	3.4	10/10/2011	277274.70	3829218.40	No Contact	No Contact	N/A	N/A	N/A	0	0	0	Left in Place	None	
UXO2_2_T32-1-00007	UXO2_2_T32-1	22.0	10/10/2011	277265.30	3829232.40	Cultural Debris	Scrap	N/A	N/A	N/A	2	8	0.4	Scrap Bin	None	
UXO2_2_T32-1-00008	UXO2_2_T32-1	4.2	10/10/2011	277259.90	3829239.10	Cultural Debris	Scrap	N/A	N/A	N/A	1	1	0.1	Scrap Bin	None	
UXO2_2_T32-1-00009	UXO2_2_T32-1	3.0	10/10/2011	277241.90	3829256.30	No Contact	No Contact	N/A	N/A	N/A	0	0	0	Left in Place	None	
UXO2_2_T32-2-00001	UXO2_2_T32-2	3.1	10/10/2011	277417.70	3829031.30	No Contact	No Contact	N/A	N/A	N/A	0	0	0	Left in Place	None	
UXO2_2_T32-2-00002	UXO2_2_T32-2	20.3	10/10/2011	277261.10	3829239.60	Cultural Debris	Scrap	N/A	N/A	N/A	2	4	0.4	Scrap Bin	None	
UXO2_2_T32-2-00003	UXO2_2_T32-2	75.3	10/10/2011	277252.50	3829246.80	Cultural Debris	Scrap	N/A	N/A	N/A	1	6	5	Scrap Bin	None	
UXO2_2_T33-1-00001	UXO2_2_T33-1	3.9	10/10/2011	277339.50	3829147.40	No Contact	No Contact	N/A	N/A	N/A	0	0	0	Left in Place	None	
UXO2_2_T33-1-00002	UXO2_2_T33-1	3.4	10/10/2011	277292.00	3829216.20	Cultural Debris	Scrap	N/A	N/A	N/A	1	8	0.2	Scrap Bin	None	
UXO2_2_T33-1-00003	UXO2_2_T33-1	10.3	10/10/2011	277290.60	3829217.90	Cultural Debris	Scrap	N/A	N/A	N/A	1	4	0.2	Scrap Bin	None	
UXO2_2_T33-1-00004	UXO2_2_T33-1	3.1	10/10/2011	277244.70	3829274.00	No Contact	No Contact	N/A	N/A	N/A	0	0	0	Left in Place	None	
UXO2_2_T33-2-00001	UXO2_2_T33-2	4.3	10/10/2011	277384.20	3829095.80	Cultural Debris	Scrap	N/A	N/A	N/A	1	1	0.1	Scrap Bin	None	
UXO2_2_T33-2-00002	UXO2_2_T33-2	4.4	10/10/2011	277382.10	3829098.50	Cultural Debris	Scrap	N/A	N/A	N/A	1	1	0.1	Scrap Bin	None	
UXO2_2_T33-2-00003	UXO2_2_T33-2	4.6	10/10/2011	277371.70	3829110.90	Cultural Debris	Scrap	N/A	N/A	N/A	1	2	0.1	Scrap Bin	None	
UXO2_2_T33-2-00004	UXO2_2_T33-2	3.4	10/10/2011	277314.00	3829182.90	No Contact	No Contact	N/A	N/A	N/A	0	0	0	Left in Place	None	
UXO2_2_T33-2-00005	UXO2_2_T33-2	4.8	10/10/2011	277290.10	3829220.30	Cultural Debris	Scrap	N/A	N/A	N/A	1	6	0.1	Scrap Bin	None	
UXO2_2_T34-1-00001	UXO2_2_T34-1	3.7	10/10/2011	277299.60	3829219.30	Cultural Debris	Scrap	N/A	N/A	N/A	1	1	0.1	Scrap Bin	None	

TABLE H-1

MEC Intrusive Investigation Results

Site UXO-02

MCIEAST-MCB CAMLEJ, North Carolina

Anomaly Identification	Grid	Amplitude (millivolts)	Dig Date	Easting (UTM)	Northing (UTM)	Item Group	Item Class	Category	Filler	Fuze	Quantity	Depth (inch)	Weight (pound)	Action Taken	Demolition Required?	Item Comment
UXO2_2_T34-1-00002	UXO2_2_T34-1	42.5	10/10/2011	277295.10	3829224.10	Cultural Debris	Scrap	N/A	N/A	N/A	1	4	5	Scrap Bin	None	
UXO2_2_T34-1-00003	UXO2_2_T34-1	3.7	10/10/2011	277279.50	3829251.30	No Contact	No Contact	N/A	N/A	N/A	0	0	0	Left in Place	None	
UXO2_2_T34-1-00004	UXO2_2_T34-1	22.8	10/10/2011	277277.10	3829255.00	Cultural Debris	Scrap	N/A	N/A	N/A	2	6	0.4	Scrap Bin	None	
UXO2_2_T34-1-00005	UXO2_2_T34-1	10.1	10/10/2011	277273.70	3829257.10	Cultural Debris	Scrap	N/A	N/A	N/A	1	2	0.2	Scrap Bin	None	
UXO2_2_T34-1-00006	UXO2_2_T34-1	7.6	10/10/2011	277272.10	3829258.20	Cultural Debris	Scrap	N/A	N/A	N/A	1	3	0.1	Scrap Bin	None	
UXO2_2_T34-2-00001	UXO2_2_T34-2	3.3	10/10/2011	277380.50	3829113.90	No Contact	No Contact	N/A	N/A	N/A	0	0	0	Left in Place	None	
UXO2_2_T34-2-00002	UXO2_2_T34-2	3.4	10/10/2011	277378.20	3829116.80	No Contact	No Contact	N/A	N/A	N/A	0	0	0	Left in Place	None	
UXO2_2_T34-2-00003	UXO2_2_T34-2	4.2	10/10/2011	277376.50	3829121.10	Cultural Debris	Scrap	N/A	N/A	N/A	1	2	0.1	Scrap Bin	None	
UXO2_2_T34-2-00004	UXO2_2_T34-2	3.9	10/10/2011	277376.10	3829122.00	No Contact	No Contact	N/A	N/A	N/A	0	0	0	Left in Place	None	
UXO2_2_T34-2-00005	UXO2_2_T34-2	3.1	10/10/2011	277370.50	3829129.90	Cultural Debris	Scrap	N/A	N/A	N/A	1	8	0.2	Scrap Bin	None	
UXO2_2_T34-2-00006	UXO2_2_T34-2	25.0	10/10/2011	277295.90	3829224.70	Cultural Debris	Scrap	N/A	N/A	N/A	2	1	0.4	Scrap Bin	None	
UXO2_2_T34-2-00007	UXO2_2_T34-2	36.4	10/10/2011	277278.30	3829255.70	Cultural Debris	Scrap	N/A	N/A	N/A	1	2	0.5	Scrap Bin	None	Bolt
UXO2_2_T34-2-00008	UXO2_2_T34-2	15.1	10/10/2011	277274.90	3829257.90	Cultural Debris	Scrap	N/A	N/A	N/A	1	8	0.2	Scrap Bin	None	
UXO2_2_T34-2-00009	UXO2_2_T34-2	65.4	10/10/2011	277273.80	3829258.70	Cultural Debris	Scrap	N/A	N/A	N/A	1	2	0.5	Scrap Bin	None	
UXO2_2_T34-2-00010	UXO2_2_T34-2	14.2	10/10/2011	277272.30	3829259.70	Cultural Debris	Scrap	N/A	N/A	N/A	1	2	0.2	Scrap Bin	None	
UXO2_2_T34-2-00011	UXO2_2_T34-2	11.0	10/10/2011	277271.60	3829260.20	Cultural Debris	Scrap	N/A	N/A	N/A	1	4	0.2	Scrap Bin	None	
UXO2_2_T34-2-00012	UXO2_2_T34-2	14.0	10/10/2011	277264.60	3829266.10	Cultural Debris	Scrap	N/A	N/A	N/A	1	1	0.1	Scrap Bin	None	Survey nail
UXO2_2_T35-1-00001	UXO2_2_T35-1	3.6	10/10/2011	277383.70	3829124.00	Cultural Debris	Scrap	N/A	N/A	N/A	13	8	1.5	Scrap Bin	None	
UXO2_2_T35-1-00002	UXO2_2_T35-1	3.2	10/10/2011	277339.20	3829183.20	No Contact	No Contact	N/A	N/A	N/A	0	0	0	Left in Place	None	
UXO2_2_T35-1-00003	UXO2_2_T35-1	4.0	10/10/2011	277336.50	3829186.40	No Contact	No Contact	N/A	N/A	N/A	0	0	0	Left in Place	None	
UXO2_2_T35-1-00004	UXO2_2_T35-1	4.3	10/10/2011	277325.80	3829201.00	Cultural Debris	Scrap	N/A	N/A	N/A	1	6	0.25	Scrap Bin	None	
UXO2_2_T35-1-00005	UXO2_2_T35-1	22.4	10/10/2011	277316.20	3829212.60	Cultural Debris	Scrap	N/A	N/A	N/A	2	6	0.4	Scrap Bin	None	
UXO2_2_T35-1-00006	UXO2_2_T35-1	17.4	10/10/2011	277302.80	3829229.90	Cultural Debris	Scrap	N/A	N/A	N/A	2	3	0.4	Scrap Bin	None	
UXO2_2_T35-1-00007	UXO2_2_T35-1	3.6	10/10/2011	277273.40	3829270.30	No Contact	No Contact	N/A	N/A	N/A	0	0	0	Left in Place	None	
UXO2_2_T35-1-00008	UXO2_2_T35-1	14.4	10/10/2011	277251.10	3829297.40	Cultural Debris	Scrap	N/A	N/A	N/A	1	1	0.1	Scrap Bin	None	Survey nail
UXO2_2_T35-1-00009	UXO2_2_T35-1	47.8	10/10/2011	277250.10	3829299.40	Cultural Debris	Scrap	N/A	N/A	N/A	1	8	1	Scrap Bin	None	
UXO2_2_T35-2-00001	UXO2_2_T35-2	24.8	10/10/2011	277317.30	3829212.90	Cultural Debris	Scrap	N/A	N/A	N/A	2	3	0.4	Scrap Bin	None	
UXO2_2_T35-2-00002	UXO2_2_T35-2	16.7	10/10/2011	277304.00	3829230.20	Cultural Debris	Scrap	N/A	N/A	N/A	1	1	0.2	Scrap Bin	None	
UXO2_2_T35-2-00003	UXO2_2_T35-2	38.8	10/10/2011	277251.70	3829299.70	Cultural Debris	Scrap	N/A	N/A	N/A	1	6	0.5	Scrap Bin	None	Bolt
UXO2_2_T35-2-00004	UXO2_2_T35-2	10.0	10/10/2011	277251.30	3829300.50	Cultural Debris	Scrap	N/A	N/A	N/A	1	3	0.1	Scrap Bin	None	
UXO2_2_T35-2-00005	UXO2_2_T35-2	37.9	10/10/2011	277251.00	3829301.20	Cultural Debris	Scrap	N/A	N/A	N/A	1	10	0.5	Scrap Bin	None	
UXO2_2_T36-1-00001	UXO2_2_T36-1	3.2	10/10/2011	277376.50	3829149.20	No Contact	No Contact	N/A	N/A	N/A	0	0	0	Left in Place	None	
UXO2_2_T36-1-00002	UXO2_2_T36-1	3.9	10/10/2011	277360.70	3829172.00	No Contact	No Contact	N/A	N/A	N/A	0	0	0	Left in Place	None	
UXO2_2_T36-1-00003	UXO2_2_T36-1	4.5	10/10/2011	277335.40	3829203.40	Cultural Debris	Scrap	N/A	N/A	N/A	1	2	0.1	Scrap Bin	None	
UXO2_2_T36-1-00004	UXO2_2_T36-1	3.1	10/10/2011	277330.10	3829210.00	No Contact	No Contact	N/A	N/A	N/A	0	0	0	Left in Place	None	
UXO2_2_T36-1-00005	UXO2_2_T36-1	3.9	10/10/2011	277329.30	3829210.90	No Contact	No Contact	N/A	N/A	N/A	0	0	0	Left in Place	None	
UXO2_2_T36-1-00006	UXO2_2_T36-1	17.8	10/10/2011	277314.30	3829230.60	Cultural Debris	Scrap	N/A	N/A	N/A	2	8	0.4	Scrap Bin	None	
UXO2_2_T36-1-00007	UXO2_2_T36-1	20.9	10/10/2011	277310.40	3829236.40	Cultural Debris	Scrap	N/A	N/A	N/A	2	6	0.4	Scrap Bin	None	
UXO2_2_T36-1-00008	UXO2_2_T36-1	5.5	10/10/2011	277298.10	3829254.70	Cultural Debris	Scrap	N/A	N/A	N/A	1	3	0.1	Scrap Bin	None	
UXO2_2_T36-1-00009	UXO2_2_T36-1	3.5	10/10/2011	277294.90	3829259.40	No Contact	No Contact	N/A	N/A	N/A	0	0	0	Left in Place	None	
UXO2_2_T36-1-00010	UXO2_2_T36-1	3.5	10/10/2011	277270.70	3829289.90	No Contact	No Contact	N/A	N/A	N/A	0	0	0	Left in Place	None	
UXO2_2_T36-1-00011	UXO2_2_T36-1	3.5	10/10/2011	277267.90	3829292.80	No Contact	No Contact	N/A	N/A	N/A	0	0	0	Left in Place	None	
UXO2_2_T36-1-00012	UXO2_2_T36-1	3.1	10/10/2011	277264.00	3829297.50	No Contact	No Contact	N/A	N/A	N/A	0	0	0	Left in Place	None	
UXO2_2_T36-1-00013	UXO2_2_T36-1	11.4	10/10/2011	277256.40	3829306.40	Cultural Debris	Scrap	N/A	N/A	N/A	1	8	0.2	Scrap Bin	None	
UXO2_2_T36-2-00001	UXO2_2_T36-2	3.7	10/10/2011	277362.10	3829171.60	No Contact	No Contact	N/A	N/A	N/A	0	0	0	Left in Place	None	
UXO2_2_T37-1-00001	UXO2_2_T37-1	3.8	10/10/2011	277280.30	3829291.50	No Contact	No Contact	N/A	N/A	N/A	0	0	0	Left in Place	None	
UXO2_2_T37-1-00002	UXO2_2_T37-1	3.8	10/10/2011	277271.50	3829301.00	No Contact	No Contact	N/A	N/A	N/A	0	0	0	Left in Place	None	
UXO2_2_T37-2-00001	UXO2_2_T37-2	3.7	10/10/2011	277298.00	3829269.30	No Contact	No Contact	N/A	N/A	N/A	0	0	0	Left in Place	None	

Alum - aluminum
ft - feet
MEC - munitions and explosives of concern
mm - millimeter
MDAS - Materially potentially presenting an explosive hazard
N/A - not applicable
QC - quality control
TBD - to be determined
UTM - Universal Transverse Mercator, Zone 18
RRD - Rangle Related Debris

Appendix I
Human Health Risk Screening Tables

TABLE I-1

Occurrence, Distribution, and Selection of Chemicals of Potential Concern

Site UXO-2

MCIEAST-MCB CAMLEJ, North Carolina

Scenario Timeframe: Future
Medium: Groundwater
Exposure Medium: Groundwater

Exposure Point	CAS Number	Chemical	Minimum [1] Concentration Qualifier	Maximum [1] Concentration Qualifier	Units	Location of Maximum Concentration	Detection Frequency	Range of Detection Limits	Concentration [2] Used for Screening	Background [3] Value	Screening [4] Toxicity Value	Potential ARAR/TBC Value	Potential ARAR/TBC Source	COPC Flag	Rationale for [5] Contaminant Deletion or Selection
Groundwater	**7429-90-5**	**Aluminum**	**6.5E+01 J**	**5.5E+04 J**	**UG/L**	**MR02-GW17-10A**	**43/45**	**200 - 200**	**5.5E+04**	**1.9E+03**	**3.7E+03 N**	**50 - 200**	**SMCL**	**YES**	**ASL**
UXO-02	**7440-36-0**	**Antimony**	**2.0E+00 J**	**7.0E+00 J**	**UG/L**	**MR02-GW08-10A**	**4/45**	**10 - 40**	**7.0E+00**	**3.3E+00**	**1.5E+00 N**	**6.0E+00**	**MCL**	**YES**	**ASL**
	7440-38-2	**Arsenic**	**2.0E+00 J**	**9.3E+00 J**	**UG/L**	**MR02-GW12-10A**	**10/45**	**10 - 40**	**9.3E+00**	**5.8E+00**	**4.5E-02 C**	**1.0E+01**	**MCL**	**YES**	**ASL**
												1.0E+01	**15A NCAC 2L**		
	7440-39-3	Barium	8.5E+00 J	2.1E+02	UG/L	MR02-GW06-10A	37/45	10 - 200	2.1E+02	8.6E+01	7.3E+02 N	2.0E+03	MCL	NO	BSL
												7.0E+02	15A NCAC 2L		
	7440-41-7	Beryllium	1.5E-01 J	2.8E-01 J	UG/L	MR02-IR69-GW12-11C	6/45	1 - 5	2.8E-01	3.1E-01	7.3E+00 N	4.0E+00	MCL	NO	DLBSL
	7440-43-9	Cadmium	ND	ND	UG/L		0/45	1 - 2	1.0E+00	3.6E-01	1.8E+00 N	5.0E+00	MCL	NO	DLBSL
												2.0E+00	15A NCAC 2L		
	7440-70-2	Calcium	9.4E+02	7.7E+04 J	UG/L	MR02-GW03-11C	23/45	500 - 5000	7.7E+04	6.9E+04	N/A	N/A	N/A	NO	NUT
	7440-47-3	**Chromium**	**3.5E-01 J**	**5.7E+01**	**UG/L**	**MR02-GW17-10A**	**21/45**	**10 - 10**	**5.7E+01**	**3.1E+00**	**4.3E-02 C**	**1.0E+02**	**MCL**	**YES**	**ASL**
												1.0E+01	**15A NCAC 2L**		
	7440-48-4	**Cobalt**	**2.9E-01 J**	**1.0E+01 J**	**UG/L**	**MR02-GW12-10A**	**16/45**	**10 - 50**	**1.0E+01**	**3.4E+00**	**1.1E+00 N**	**N/A**	**N/A**	**YES**	**ASL**
	7440-50-8	Copper	1.57 J	4.8E+01	UG/L	MR02-GW06-10A	6/45	10 - 25	4.8E+01	2.8E+00	1.5E+02 N	1.3E+03	MCL	NO	BSL
												1.0E+03	15A NCAC 2L		
	7439-89-6	**Iron**	**1.1E+02 J**	**3.1E+04**	**UG/L**	**MR02-IR69-GW15-10A**	**44/45**	**50 - 100**	**3.1E+04**	**6.0E+03**	**2.6E+03 N**	**3.0E+02**	**15A NCAC 2L**	**YES**	**ASL**
	7439-92-1	**Lead**	**8.1E-01 J**	**2.4E+01**	**UG/L**	**MR02-GW06-10A**	**24/45**	**3 - 20**	**2.4E+01**	**2.8E+00**	**1.5E+01**	**1.5E+01**	**MCL, 15A NCAC 2L**	**YES**	**ASL**
	7439-95-4	Magnesium	8.0E+02	8.4E+03 J	UG/L	MR02-GW09-10A	12/45	500 - 5000	8.4E+03	6.4E+03	N/A	N/A	N/A	NO	NUT
	7439-96-5	**Manganese**	**5.0E+00 J**	**8.0E+02**	**UG/L**	**MR02-IR69-GW15-10A**	**36/45**	**15 - 40**	**8.0E+02**	**2.1E+02**	**8.8E+01 N**	**5.0E+01**	**15A NCAC 2L**	**YES**	**ASL**
	7439-97-6	Mercury	4.0E-02 J	8.0E-02 J	UG/L	MR02-GW06-10A	2/45	0.2 - 0.4	8.0E-02	1.0E-01	1.1E+00 N	2.0E+00	MCL	NO	BSL
												1.0E+00	15A NCAC 2L		
	7440-02-0	Nickel	4.6E-01 J	2.5E+01 J	UG/L	MR02-GW25-10A	29/45	10 - 40	2.5E+01	8.0E+00	7.3E+01 N	1.0E+02	15A NCAC 2L	NO	BSL
	7440-09-7	Potassium	2.0E+02 J	1.1E+04	UG/L	MR02-GW03-11C	42/45	1000 - 5000	1.1E+04	3.3E+03	N/A	N/A	N/A	NO	NUT
	7782-49-2	Selenium	5.6E-01 J	1.3E+00 J	UG/L	MR02-GW08-10A : MR02-GW24-10A	7/45	5 - 40	1.3E+00	3.1E+00	1.8E+01 N	5.0E+01	MCL, 15A	NO	BSL
												2.0E+01	15A NCAC 2L		
	7440-22-4	Silver	ND	ND	UG/L		0/45	10 - 10	1.0E+01	7.7E-01	1.8E+01 N	2.0E+01	15A NCAC 2L	NO	DLBSL
	7440-23-5	Sodium	5.3E+03	7.5E+04	UG/L	MR02-GW09-10A	41/45	500 - 5000	7.5E+04	2.3E+04	N/A	N/A	N/A	NO	NUT
	7440-28-0	Thallium	6.0E-02 J	4.1E-01 J	UG/L	MR02-GW06-10A	9/45	2 - 40	4.1E-01	3.8E+00	3.7E-02 N	2.0E+00	MCL	NO	BBK
	7440-62-2	**Vanadium**	**3.8E-01 J**	**5.5E+01**	**UG/L**	**MR02-GW17-10A**	**34/45**	**10 - 50**	**5.5E+01**	**4.7E+00**	**1.8E+01 N**	**N/A**	**N/A**	**YES**	**ASL**
	7440-66-6	Zinc	7.7E+00 J	4.2E+02	UG/L	MR02-GW16-10A	21/45	10 - 20	4.2E+02	4.2E+01	1.1E+03 N	1.0E+03	15A NCAC 2L	NO	BSL

[1] Minimum/Maximum detected concentration. Unfiltered results for metals since in general no significant difference between filtered and unfiltered results.

[2] Maximum concentration is used for screening.

[3] Background values are two times the arithmetic mean basewide background shallow groundwater concentrations. Background values are from *Draft Base Background Groundwater Study, Marine Corps Base, Camp Lejeune, North Carolina*. Baker Environmental, August, 2002.

[4] Oak Ridge National Laboratory (ORNL). June, 2011. Regional Screening Levels for Chemical Contaminants at Superfund Sites.
Available: http://epa-prgs.ornl.gov/chemicals/index.shtml. Adjusted (noncarcinogenic RSLs adjusted by dividing by 10) tap water RSLs.
RSL value for Chromium(VI) used as surrogate for chromium.
RSL value for Manganese (water) used as surrogate for manganese.
RSL value for Mercury (inorganic salts) used as surrogate for mercury.

[5] Rationale Codes

Selection Reason: Above Screening Levels (ASL)
Detection Limit Above Screening Level (DLASL), not quantitatively evaluated in HHRA

Deletion Reason: No Toxicity Information (NTX)
Essential Nutrient (NUT)
Below Screening Level (BSL)
Below Background (BBK)
Detection Limit Below Screening Level (DLBSL)

MCL = Maximum Contaminant Level from EPA's National Primary Drinking Water Standards
SMCL = Secondary Maximum Contaminant Level from EPA's National Primary Drinking Water Standards.
15A NCAC 2L = North Carolina Classifications and Groundwater Quality Standards, Amended January 2010.
COPC = Chemical of Potential Concern
ARAR/TBC = Applicable or Relevant and Appropriate Requirement/ To Be Considered
J = Estimated Value
C = Carcinogenic
N = Noncarcinogenic
ND = Not detected
ug/L = micrograms per liter
C* = N screening level < 100x C screening level
C** = N screening level < 10x C screening level, therefore N screening value/10 used as screening level
N/A = Not available

TABLE I-2

Risk Ratio Screening for Groundwater, Maximum Detected Concentration

Site UXO-2

MCIEAST-MCB CAMLEJ, North Carolina

Analyte	Detection Frequency	Maximum Detected Concentration (Qualifier)	Sample Location of Maximum Detected Concentration	Tap Water RSL	Acceptable Risk Level	Corresponding Hazard Index[a]	Corresponding Cancer Risk[b]	Target Organ
Metals (ug/L)								
Aluminum	43 / 45	5.5E+04 J	MR02-GW17-10A	3.7E+04	1	1.5	NA	Neurological, Developmental
Antimony	4 / 45	7.0E+00 J	MR02-GW08-10A	1.5E+01	1	0.5	NA	Longevity, Blood
Arsenic	10 / 45	9.3E+00 J	MR02-GW12-10A	4.5E-02	1.E-06	NA	2.E-04	NA
Chromium	21 / 45	5.7E+01	MR02-GW17-10A	4.3E-02	1.E-06	NA	1.E-03	NA
Cobalt	16 / 45	1.0E+01 J	MR02-GW12-10A	1.1E+01	1	0.9	NA	Thyroid
Iron	44 / 45	3.1E+04	MR02-IR69-GW15-10A	2.6E+04	1	1.2	NA	Gastrointestinal
Lead	24 / 45	2.4E+01	MR02-GW06-10A	NA	NA	NA	NA	NA
Manganese	36 / 45	8.0E+02	MR02-IR69-GW15-10A	8.8E+02	1	0.9	NA	CNS
Vanadium	34 / 45	5.5E+01	MR02-GW17-10A	1.8E+02	1	0.3	NA	Hair, Blood
Cumulative Corresponding Hazard Index[c]						5.3		
Cumulative Corresponding Cancer Risk[d]							2E-03	

Total Neurological HI =	2.4
Total Developmental HI =	1.5
Total Longevity HI =	0.5
Total Gastrointestinal HI =	1.2
Total Hair HI =	0.3
Total Blood HI =	0.8
Total Thyroid HI =	0.9

Notes:

[a] Corresponding Hazard Index equals maximum detected concentration divided by the RSL divided by the acceptable risk level.

[b] Corresponding Cancer Risk equals maximum detected concentration divided by the RSL divided by the acceptable risk level.

c Cumulative Corresponding Hazard Index equals sum of Corresponding Hazard Indices for each constituent.

[d] Cumulative Corresponding Cancer Risk equals sum of Corresponding Cancer Risks for each constituent.

Constituent selected as COPC if it contributes to an overall Hazard Index by target organ greater than 0.5 or Cumulative Corresponding Cancer Risk greater than 5E-05, otherwise, constituent not selected as COPC.

Constituents selected as COPCs are indicated by shading.

COPC = Constituent of Potential Concern

HI = Hazard Index

ug/L = micrograms per liter

NA = Not available/not applicable.

CNS = Central Nervous System

TABLE I-3

Risk Ratio Screening for Groundwater, 95% UCL Concentration

Site UXO-02

MCIEAST-MCB CAMLEJ, North Carolina

Analyte	Detection Frequency	95% UCL		95% UCL Rationale	Screening Level	Acceptable Risk Level	Corresponding Hazard Index[a]	Corresponding Cancer Risk[b]	Target Organ
Metals (ug/L)									
Aluminum	**43 / 45**	**1.5E+04**	**97.5% KM**	**1**	**3.7E+04**	**1**	**0.4**	**NA**	**Neurological, Developmental**
Antimony	**4 / 45**	**7.0E+00**	**Max**	**1, 2, 3, 5**	**1.5E+01**	**1**	**0.5**	**NA**	**Longevity, Blood**
Arsenic	**10 / 45**	**6.1E+00**	**95% KM-t**	**1, 2, 3**	**4.5E-02**	**1.E-06**	**NA**	**1.E-04**	**NA**
Chromium	**21 / 45**	**1.4E+01**	**95% KM**	**4**	**4.3E-02**	**1.E-06**	**NA**	**3.E-04**	**NA**
Cobalt	16 / 45	3.3E+00	95%KM-B	1	1.1E+01	1	0.3	NA	Thyroid
Iron	44 / 45	7.9E+03	95% KM	1	2.6E+04	1	0.3	NA	Gastrointestinal
Lead	24 / 45	3.7E+00	Mean	NA	NA	NA	NA	NA	NA
Manganese	**36 / 45**	**1.5E+02**	**95% KM**	**1**	**8.8E+02**	**1**	**0.2**	**NA**	**CNS**
Vanadium	**34 / 45**	**1.6E+01**	**95% KM**	**4**	**1.8E+02**	**1**	**0.1**	**NA**	**Hair, Blood**
Cumulative Corresponding Hazard Index[c]							**NA**		
Cumulative Corresponding Cancer Risk[d]								**4E-04**	

Total Neurological HI =	0.6
Total Developmental HI =	0.4
Total Longevity HI =	0.5
Total Gastrointestinal HI =	0.3
Total Hair HI =	0.1
Total Blood HI =	0.6
Total Thyroid HI =	0.3

[a] Corresponding Hazard Index equals 95% UCL divided by the RSL divided by the acceptable risk level.

[b] Corresponding Cancer Risk equals 95% UCL divided by the RSL divided by the acceptable risk level.

[c] Cumulative Corresponding Hazard Index equals sum of Corresponding Hazard Indices for each constituent.

[d] Cumulative Corresponding Cancer Risk equals sum of Corresponding Cancer Risks for each constituent.

Constituent selected as COPC if it contributes to an overall Hazard Index by target organ greater than 0.5 or Cumulative Corresponding Cancer Risk greater than 5E-05,

Constituents selected as COPCs are indicated by shading.

ug/L = micrograms per liter

CNS = Central Nervous System

HI = Hazard Index

ProUCL, Version 4.1 used to determine distribution of data and calculate 95% UCL, following recommendations in users guide (USEPA. May, 2010. ProUCL, Version 4.1. Prepared by Lockheed Martin Environmental Services).

Options: 95% Kaplan-Meier Chebyshev UCL (95% KM); 95% Kaplan-Meier (t) UCL (95% KM-t); 97.5% Kaplan-Meier Chebyshev UCL (97.5% KM); 95% Kaplan-Meier (Percentile Bootstrap) UCL (95% KM-B)

Maximum detected concentration (Max)

UCL Rationale:

(1) Shapiro-Wilk W Test/Lilliefors test indicates data are log-normally distributed.

(2) Shapiro-Wilk W Test/Lilliefors indicates data are normally distributed.

(3) Test indicates data are gamma distributed.

(4) Distribution tests are inconclusive

(5) Maximum value used because calculated 95% UCL exceeds maximum concentration.

(6) Lead evaluated using arithmetic mean concentration in lead models, therefore, arithmetic mean concentration presented here.

TABLE I-4

Occurrence, Distribution, and Selection of Chemicals of Potential Concern

Site UXO-2, 2011 data

MCIEAST-MCB CAMLEJ, North Carolina

Scenario Timeframe: Future
Medium: Groundwater
Exposure Medium: Groundwater

Exposure Point	CAS Number	Chemical	Minimum [1] Concentration Qualifier	Maximum [1] Concentration Qualifier	Units	Location of Maximum Concentration	Detection Frequency	Range of Detection Limits	Concentration [2] Used for Screening	Background [3] Value	Screening [4] Toxicity Value	Potential ARAR/TBC Value	Potential ARAR/TBC Source	COPC Flag	Rationale for [5] Contaminant Deletion or Selection
Groundwater	**7429-90-5**	**Aluminum**	**7.9E+01 J**	**5.3E+03**	**UG/L**	**MR02-IR69-GW12-11C**	**10/10**	**200 - 200**	**5.3E+03**	**1.9E+03**	**3.7E+03 N**	**50 - 200**	**SMCL**	**YES**	**ASL**
UXO-02	**7440-36-0**	**Antimony**	**4.6E+00 J**	**6.8E+00 J**	**UG/L**	**MR02-IR69-GW09-11C**	**2/10**	**40 - 40**	**6.8E+00**	**3.3E+00**	**1.5E+00 N**	**6.0E+00**	**MCL**	**YES**	**ASL**
	7440-38-2	Arsenic	4.5E+00 J	5.4E+00 J	UG/L	MR02-GW01-11C	2/10	40 - 40	5.4E+00	5.8E+00	4.5E-02 C	1.0E+01	MCL	NO	BBK
	7440-39-3	Barium	1.2E+01	5.9E+01	UG/L	MR02-GW03-11C	10/10	10 - 10	5.9E+01	8.6E+01	7.3E+02 N	2.0E+03	MCL	NO	BSL
	7440-41-7	Beryllium	1.5E-01 J	2.8E-01 J	UG/L	MR02-IR69-GW12-11C	6/10	1 - 1	2.8E-01	3.1E-01	7.3E+00 N	4.0E+00	MCL	NO	BSL
	7440-43-9	Cadmium	ND	ND	UG/L		0/10	2 - 2	2.0E+00	3.6E-01	1.8E+00 N	5.0E+00	MCL	YES	DLASL
	7440-70-2	Calcium	9.4E+02	7.7E+04 J	UG/L	MR02-GW03-11C	10/10	500 - 500	7.7E+04	6.9E+04	N/A	N/A	N/A	NO	NUT
	7440-47-3	**Chromium**	**3.5E-01 J**	**5.4E+00 J**	**UG/L**	**MR02-IR69-GW12-11C**	**9/10**	**10 - 10**	**5.4E+00**	**3.1E+00**	**4.3E-02 C**	**1.0E+02**	**MCL**	**YES**	**ASL**
	7440-48-4	**Cobalt**	**7.9E-01 J**	**8.7E+00 J**	**UG/L**	**MR02-GW01-11C**	**4/10**	**10 - 10**	**8.7E+00**	**3.4E+00**	**1.1E+00 N**	**N/A**	**N/A**	**YES**	**ASL**
	7440-50-8	Copper	1.6E+00 J	1.8E+00 J	UG/L	MR02-GW01-11C	2/10	10 - 10	1.8E+00	2.8E+00	1.5E+02 N	1.3E+03	MCL	NO	BSL
	7439-89-6	**Iron**	**1.6E+02**	**1.3E+04 J**	**UG/L**	**MR02-IR69-GW12-11C**	**10/10**	**50 - 50**	**1.3E+04**	**6.0E+03**	**2.6E+03 N**	**3.0E+02**	**15A NCAC 2L**	**YES**	**ASL**
	7439-92-1	Lead	1.3E+00 J	4.1E+00 J	UG/L	MR02-IR69-GW12-11C	3/10	20 - 20	4.1E+00	2.8E+00	1.5E+01	1.5E+01	MCL, 15A NCAC 2L	NO	BSL
	7439-95-4	Magnesium	8.0E+02	4.9E+03	UG/L	MR02-GW03-11C	10/10	500 - 500	4.9E+03	6.4E+03	N/A	N/A	N/A	NO	NUT
	7439-96-5	**Manganese**	**2.6E+01 J**	**2.2E+02**	**UG/L**	**MR02-GW02-11C**	**5/10**	**40 - 40**	**2.2E+02**	**2.1E+02**	**8.8E+01 N**	**5.0E+01**	**15A NCAC 2L**	**YES**	**ASL**
	7439-97-6	Mercury	ND	ND	UG/L		0/10	0.4 - 0.4	4.0E-01	1.0E-01	1.1E+00 N	2.0E+00	MCL	NO	DLBSL
	7440-02-0	Nickel	8.0E+00 J	2.2E+01	UG/L	MR02-GW01-11C	2/10	10 - 10	2.2E+01	8.0E+00	7.3E+01 N	1.0E+02	15A NCAC 2L	NO	BSL
	7440-09-7	Potassium	2.5E+02 J	1.1E+04	UG/L	MR02-GW03-11C	10/10	1000 - 1000	1.1E+04	3.3E+03	N/A	N/A	N/A	NO	NUT
	7782-49-2	Selenium	ND	ND	UG/L		0/10	40 - 40	4.0E+01	3.1E+00	1.8E+01 N	5.0E+01	MCL, 15A	YES	DLASL
	7440-22-4	Silver	ND	ND	UG/L		0/10	10 - 10	1.0E+01	7.7E-01	1.8E+01 N	2.0E+01	15A NCAC 2L	NO	DLBSL
	7440-23-5	Sodium	8.5E+03	2.1E+04	UG/L	MR02-GW03-11C	10/10	500 - 500	2.1E+04	2.3E+04	N/A	N/A	N/A	NO	NUT
	7440-28-0	Thallium	ND	ND	UG/L		0/10	40 - 40	4.0E+01	3.8E+00	3.7E-02 N	2.0E+00	MCL	YES	DLASL
	7440-62-2	Vanadium	8.3E-01 J	8.2E+00 J	UG/L	MR02-IR69-GW12-11C	6/10	10 - 10	8.2E+00	4.7E+00	1.8E+01 N	N/A	N/A	NO	BSL
	7440-66-6	Zinc	7.7E+00 J	2.6E+01	UG/L	MR02-IR69-GW12-11C	6/9	10 - 10	2.6E+01	4.2E+01	1.1E+03 N	1.0E+03	15A NCAC 2L	NO	BSL

[1] Minimum/Maximum detected concentration. Unfiltered results for metals since in general no significant difference between filtered and unfiltered results.

[2] Maximum concentration is used for screening.

[3] Background values are two times the arithmetic mean basewide background shallow groundwater concentrations. Background values are from *Draft Base Background Groundwater Study, Marine Corps Base, Camp Lejeune, North Carolina.* Baker Environmental, August, 2002.

[4] Oak Ridge National Laboratory (ORNL). June, 2011. Regional Screening Levels for Chemical Contaminants at Superfund Sites. Available: http://epa-prgs.ornl.gov/chemicals/index.shtml. Adjusted (noncarcinogenic RSLs adjusted by dividing by 10) tap water RSLs.
RSL value for Chromium(VI) used as surrogate for chromium.
RSL value for Manganese (water) used as surrogate for manganese.
RSL value for Mercury (inorganic salts) used as surrogate for mercury.

[5] Rationale Codes

Selection Reason: Above Screening Levels (ASL)
Detection Limit Above Screening Level (DLASL), not quantitatively evaluated in HHRA

Deletion Reason: No Toxicity Information (NTX)
Essential Nutrient (NUT)
Below Screening Level (BSL)
Below Background (BBK)
Detection Limit Below Screening Level (DLBSL)

MCL = Maximum Contaminant Level from EPA's National Primary Drinking Water Standards
SMCL = Secondary Maximum Contaminant Level from EPA's National Primary Drinking Water Standards.
15A NCAC 2L = North Carolina Classifications and Groundwater Quality Standards, Amended January 2010.
COPC = Chemical of Potential Concern
ARAR/TBC = Applicable or Relevant and Appropriate Requirement/ To Be Considered
J = Estimated Value
C = Carcinogenic
N = Noncarcinogenic
ND = Not detected
ug/L = micrograms per liter
N/A = Not available

TABLE I-5

Risk Ratio Screening for Groundwater, Maximum Detected Concentration

Site UXO-2, 2011 data

MCIEAST-MCB CAMLEJ, North Carolina

Analyte	Detection Frequency	Maximum Detected Concentration (Qualifier)	Sample Location of Maximum Detected Concentration	Tap Water RSL	Acceptable Risk Level	Corresponding Hazard Index[a]	Corresponding Cancer Risk[b]	Target Organ
Metals (ug/L)								
Aluminum	10 / 10	5.3E+03	MR02-IR69-GW12-11C	3.7E+04	1	0.1	NA	Neurological, Developmental
Antimony	2 / 10	6.8E+00 J	MR02-IR69-GW09-11C	1.5E+01	1	0.5	NA	Longevity, Blood
Chromium	**9 / 10**	**5.4E+00 J**	**MR02-IR69-GW12-11C**	**4.3E-02**	**1.E-06**	**NA**	**1.E-04**	**NA**
Cobalt	**4 / 10**	**8.7E+00 J**	**MR02-GW01-11C**	**1.1E+01**	**1**	**0.8**	**NA**	**Thyroid**
Iron	10 / 10	1.3E+04 J	MR02-IR69-GW12-11C	2.6E+04	1	0.5	NA	Gastrointestinal
Manganese	5 / 10	2.2E+02	MR02-GW02-11C	8.8E+02	1	0.3	NA	CNS
Cumulative Corresponding Hazard Index[c]						**2.1**		
Cumulative Corresponding Cancer Risk[d]							**1E-04**	

Total Neurological HI =	0.4
Total Developmental HI =	0.1
Total Longevity HI =	0.5
Total Gastrointestinal HI =	0.5
Total Blood HI =	0.5
Total Thyroid HI =	0.8

Notes:

a Corresponding Hazard Index equals maximum detected concentration divided by the RSL divided by the acceptable risk level.

b Corresponding Cancer Risk equals maximum detected concentration divided by the RSL divided by the acceptable risk level.

c Cumulative Corresponding Hazard Index equals sum of Corresponding Hazard Indices for each constituent.

d Cumulative Corresponding Cancer Risk equals sum of Corresponding Cancer Risks for each constituent.

Constituent selected as COPC if it contributes to an overall Hazard Index by target organ greater than 0.5 or Cumulative Corresponding Cancer Risk greater than 5E-05, otherwise, constituent not selected as COPC.

Constituents selected as COPCs are indicated by shading.

COPC = Constituent of Potential Concern

HI = Hazard Index

ug/L = micrograms per liter

NA = Not available/not applicable.

CNS = Central Nervous System

TABLE I-6

Risk Ratio Screening for Groundwater, 95% UCL Concentration

Site UXO-02, 2011 data

MCIEAST-MCB CAMLEJ, North Carolina

Analyte	Detection Frequency	95% UCL		95% UCL Rationale	Screening Level	Acceptable Risk Level	Corresponding Hazard Index[a]	Corresponding Cancer Risk[b]	Target Organ
Metals (ug/L)									
Chromium	**9 / 10**	**4.3E+00**	**95% KM**	**1**	**4.3E-02**	**1.E-06**	**NA**	**1.E-04**	**NA**
Cobalt	4 / 10	4.0E+00	95% KM-t	1, 2, 3	1.1E+01	1	0.4	NA	Thyroid
Cumulative Corresponding Hazard Index[c]							**NA**		
Cumulative Corresponding Cancer Risk[d]								**1E-04**	
								Total Thyroid HI =	0.4

[a] Corresponding Hazard Index equals 95% UCL divided by the RSL divided by the acceptable risk level.

[b] Corresponding Cancer Risk equals 95% UCL divided by the RSL divided by the acceptable risk level.

[c] Cumulative Corresponding Hazard Index equals sum of Corresponding Hazard Indices for each constituent.

[d] Cumulative Corresponding Cancer Risk equals sum of Corresponding Cancer Risks for each constituent.

Constituent selected as COPC if it contributes to an overall Hazard Index by target organ greater than 0.5 or Cumulative Corresponding Cancer Risk greater than 5E-05,

Constituents selected as COPCs are indicated by shading.

ug/L = micrograms per liter

CNS = Central Nervous System

HI = Hazard Index

ProUCL, Version 4.1 used to determine distribution of data and calculate 95% UCL, following recommendations in users guide (USEPA. May, 2010. ProUCL, Version 4.1. Prepared by Lockheed Martin Environmental Services).

Options: 95% Kaplan-Meier Chebyshev UCL (95% KM); 95% Kaplan-Meier (t) UCL (95% KM-t)

UCL Rationale:

(1) Shapiro-Wilk W Test/Lilliefors test indicates data are log-normally distributed.

(2) Shapiro-Wilk W Test/Lilliefors indicates data are normally distributed.

(3) Test indicates data are gamma distributed.

(4) Distribution tests are inconclusive

(5) Maximum value used because calculated 95% UCL exceeds maximum concentration.

TABLE I-7

Occurrence, Distribution and Selection of Chemicals of Potential Concern

Expanded SI, UXO-02 - Site 69

MCIEAST-MCB CAMLEJ, North Carolina

Scenario Timeframe: Current/Future
Medium: Sediment
Exposure Medium: Sediment

Exposure Point	CAS Number	Chemical	Minimum [1] Concentration Qualifier		Maximum [1] Concentration Qualifier		Units	Location of Maximum Concentration	Detection Frequency	Range of Detection Limits	Concentration [2] Used for Screening	Background [3] Value		Screening [4] Toxicity Value		2010 Site 69 SI Maximum Concentration		Exceeds 2010 Maximum Concentration	COPC Flag	Rationale for [5] Contaminant Deletion or Selection
Site 69 Sediment	72-54-8	4,4'-DDD	4.8E-02		3.4E-01		mg/kg	MR02-SD14-11C	3/7	0.016 - 0.18	3.4E-01	8.2E-01	J	2.0E+00	C	1.3E-02	NJ	YES	NO	BSL
	72-55-9	4,4'-DDE	6.3E-02		3.3E-01		mg/kg	MR02-SD13D-11C	3/7	0.016 - 0.18	3.3E-01	1.2E-01	J	1.4E+00	C	1.4E-02	NJ	YES	NO	BSL
	50-29-3	4,4'-DDT	9.5E-03	J	3.3E-02	J	mg/kg	MR02-SD14-11C	3/7	0.016 - 0.18	3.3E-02	2.0E-02	J	1.7E+00	C*	5.5E-03	J	YES	NO	BSL
	309-00-2	Aldrin	ND		ND		mg/kg		0/7	0.016 - 0.18	1.0E-01	N/A		2.9E-02	C*	2.3E-03	J	NO	YES	DLASL
	319-84-6	alpha-BHC	ND		ND		mg/kg		0/7	0.016 - 0.18	1.0E-01	N/A		7.7E-02	C	ND		NO	YES	DLASL
	5103-71-9	alpha-Chlordane	ND		ND		mg/kg		0/7	0.016 - 0.18	1.0E-01	N/A		1.6E+00	C*	6.0E-03	J	NO	NO	DLBSL
	319-85-7	beta-BHC	ND		ND		mg/kg		0/7	0.016 - 0.18	1.0E-01	N/A		2.7E-01	C	2.3E-03	J	NO	NO	DLBSL
	319-86-8	delta-BHC	ND		ND		mg/kg		0/7	0.016 - 0.18	1.0E-01	N/A		2.7E-01	C	6.7E-03	J	NO	NO	DLBSL
	60-57-1	Dieldrin	ND		ND		mg/kg		0/7	0.016 - 0.18	1.0E-01	N/A		3.0E-02	C	2.7E-03	J	NO	YES	DLASL
	959-98-8	Endosulfan I	ND		ND		mg/kg		0/7	0.016 - 0.18	1.0E-01	N/A		3.7E+01	N	1.3E-02	J	NO	NO	DLBSL
	33213-65-9	Endosulfan II	ND		ND		mg/kg		0/7	0.016 - 0.18	1.0E-01	N/A		3.7E+01	N	ND		NO	NO	DLBSL
	1031-07-8	Endosulfan sulfate	ND		ND		mg/kg		0/7	0.016 - 0.18	1.0E-01	N/A		3.7E+01	N	1.7E-01	J	NO	NO	DLBSL
	72-20-8	Endrin	ND		ND		mg/kg		0/7	0.016 - 0.18	1.0E-01	N/A		1.8E+00	N	9.7E-04	J	NO	NO	DLBSL
	7421-93-4	Endrin aldehyde	ND		ND		mg/kg		0/7	0.016 - 0.18	1.0E-01	N/A		1.8E+00	N	5.6E-01	NJ	NO	NO	DLBSL
	53494-70-5	Endrin ketone	ND		ND		mg/kg		0/7	0.016 - 0.18	1.0E-01	N/A		1.8E+00	N	1.3E-01	J	NO	NO	DLBSL
	58-89-9	gamma-BHC (Lindane)	ND		ND		mg/kg		0/7	0.016 - 0.18	1.0E-01	N/A		5.2E-01	C*	2.0E-03	J	NO	NO	DLBSL
	5103-74-2	gamma-Chlordane	ND		ND		mg/kg		0/7	0.016 - 0.18	1.0E-01	N/A		1.6E+00	C*	9.1E-03	J	NO	NO	DLBSL
	76-44-8	Heptachlor	ND		ND		mg/kg		0/7	0.016 - 0.18	1.0E-01	N/A		1.1E-01	C	6.0E-03	J	NO	NO	DLBSL
	1024-57-3	Heptachlor epoxide	ND		ND		mg/kg		0/7	0.016 - 0.18	1.0E-01	N/A		5.3E-02	C*	3.7E-03	J	NO	YES	DLASL
	72-43-5	Methoxychlor	ND		ND		mg/kg		0/7	0.016 - 0.18	1.0E-01	N/A		3.1E+01	N	1.5E-01	J	NO	NO	DLBSL
	6923-22-4	Monocrotophos	ND		ND		MG/KG		0/7	0.25 - 1.7	1.7E+00	N/A		N/A		4.2E-01	J	NO	NO	NTX
	8001-35-2	Toxaphene	ND		ND		mg/kg		0/7	0.32 - 3.5	3.5E+00	N/A		4.4E-01	C	ND		NO	YES	DLASL

Notes:

[1] Minimum/Maximum detected concentrations.
[2] Maximum concentration is used for screening. If ND, maximum detection limit used for screening.
[3] Background value from sample MR02-SD18BG-11C.
[4] Oak Ridge National Laboratory (ORNL). June, 2011. Regional Screening Levels for Chemical Contaminants at Superfund Sites. [Online].
Used RSL for residential soil. Available: http://epa-prgs.ornl.gov/chemicals/index.shtml
RSL value for Chlordane used as surrogate for alpha-Chlordane and gamma-Chlordane.
RSL value for Endosulfan used as surrogate for Endosulfan I, Endosulfan II, and Endosulfan sulfate.
RSL value for Endrin used as surrogate for Endrin aldehyde and Endrin ketone.
[5] Rationale Codes

Selection Reason: Above Screening Levels (ASL)
Detection Limit Above Screening Level (DLASL), not quantitatively evaluated in HHRA

Deletion Reason: No Toxicity Information (NTX)
Essential Nutrient (NUT)
Below Screening Level (BSL)
Detection Limit Below Screening Level (DLBSL)

ARAR/TBC - Applicable or relevant and appropriate requirement/to be considered
J - Estimated value
N/A - Not applicable/not available
ND - Not detected
C - Carcinogenic
N - Noncarcinogenic
C* - N screening level < 100x C screening level, therefore N screening value used as screening level
C** - N screening level < 10x C screening level, therefore N screening value/10 used as screening level
N - Noncarcinogenic
COPC - Chemical of potential concern
mg/kg - milligram per kilogram

Appendix J
Baseline Ecological Risk Assessment

Baseline Ecological Risk Assessment

The following is a Baseline Ecological Risk Assessment (BERA) for the Site UXO-2/Site 69 area. Specifically, it includes Steps 6 and 7 of the EPA 8-step ecological risk assessment process. Step 6 consists of site investigation and risk analysis. Step 7 is risk characterization. The potential for risk associated with pesticides at Site UXO-2, which may be attributable to a Site 69 source area, was the trigger for the preparation of this assessment. Soil sample data collected from Site 69 (i.e., within the fence line) was not included in this assessment because remedies are being evaluated for that area that would eliminate any significant exposure to ecological receptors and surface transport to Site UXO-2.

History of Risk Assessment Activities

An ecological risk screening was conducted for soil, sediment, surface water, and groundwater samples collected from Site UXO-2 in 2010. Samples were analyzed for metals and explosive. No significant risks were identified (CH2M HILL, 2011a). Results for constituents in surface soil, subsurface soil, sediment, surface water, and groundwater were screened against benchmarks intended to be protective of ecological receptors.

A separate risk assessment (Steps 1 though 3a) was conducted for data collected as part of the Site 69 Supplemental Investigation (CH2M HILL, 2011B). This included samples within the Site 69 fence line and outside the fence line, in the area defined as Site UXO-2. Surface water, sediment, soil, subsurface soil, and groundwater samples were analyzed for metals, VOCs, SVOCs, PCBs, and pesticides The conclusion of the ERA was that ecological risks to lower trophic level receptors were possible from exposure to pesticides in soil and sediment.

An additional concern was the limited number of surface soil and sediment samples that had been analyzed for pesticides outside the fence line. As previously discussed in Section 2, there were 6 soils samples (IR69-SS01 through IR69-SS06) and 3 sediment samples (IR69-SD01 through IR69-SD03).

Subsequent to completion of the Site 69 ERA, the problem formulation for Site UXO-2/Site 69 was revised as part the Expanded SI Work Plan (CH2M HILL, 2011C, Appendix F). Through the process of re-framing the risks, the list of contaminants of potential concern (COPCs) for the next phase of field sampling was narrowed to endrin and gamma-BHC in surface soil. For sediment, the focus was narrowed to multiple organochlorine pesticides (DDD, DDE, DDT, alpha chlordane, beta-BHC, delta-BHC, dieldrin, endosulfan I, endosulfan sulfate, endrin, gamma-BHC, gamma-chlordane, heptachlor, and methoxychlor) and monocrotophos, an organophosphate pesticide.

Measurement and assessment endpoints were developed as part of Step 3b and are presented in **Table J-1**. The purpose of the endpoints was to inform the development of the work plan and guide the analysis of risk once the new data are collected. Questions to be answered through the BERA process were defined as follows:

- Are pesticides present at high enough concentrations over a large enough area to significantly impact the local population of soil invertebrates to the extent that upper trophic level receptors are affected by the loss of a prey base?
- Are pesticides present at high enough concentrations over a large enough area to significantly impact the local population of benthic invertebrates to the extent that other aquatic and terrestrial receptors are affected by the loss of a prey base?
- Are pesticides present at high enough concentrations over a large enough area to significantly impact populations of upper trophic level receptors?

In addition to Step 3b (revised problem formulation), the work plan also addressed Step 4 (BERA work plan) of the ERA process. Justification was provided for the proposed sampling, which included six soil samples and up to ten sediment samples. Locations for the six soil samples and seven of the sediment samples were identified on a work plan map, with the remaining three sediment samples being discretionary. Two sediment background samples were also planned to be collected, with the locations to be chosen prior to the sampling event. The other

planned field activity was a qualitative evaluation of the invertebrate community at each sampling location, to see if there are patterns in the health of the community and the concentrations of pesticides.

Field Verification

Field verification (Step 5) of proposed sample locations occurred July 6, 2011. Locations were identified for the six soil samples and seven sediment samples. In general, modifications from planned locations were the result of GPS accuracy/technical difficulties or purposeful movement to ensure, for example, that a soil sample was collected in the drainage pathway from Site 69 or that a sediment sample was collected at the bottom of a run in a depositional area. It was determined that the three discretionary samples were not needed.

One background sediment location was selected, not two. Instead, an unplanned background soil sample was collected. A topographical rise east of Site 69 was identified as an appropriate location to collect a sample representative of background pesticide conditions for soil. This location is not subject to runoff from Site 69.

A qualitative biota survey at each sampling location was also conducted the field verification reconnaissance. At soil sampling locations, an approximately 10 inch diameter and 4 inch deep hole was dug. Leaf litter and soil were searched for organisms. At sediment sampling locations, a triangular dip net with 10 inch sides was swept three times through the sediment surface (covering about 1 square yard). The contents of the dip net were searched for organisms. If there was no standing water, the methodology for soil was employed.

Data Set Used for the BERA

As shown in **Table J-2** of Appendix J, the data set for soil included twelve samples (6 historical and 6 new) and one background sample. The samples were collected from approximately 0 to 2 inches below ground surface (bgs) and analyzed for endrin and gamma-BHC. The data set for sediment included ten samples (3 historical and 7 new) and one background sample. The samples were collected from approximately 0 to 6 inches bgs and analyzed for organochlorine pesticides, monocrotophos, and total organic carbon.

Data Analysis and Risk Estimation

This section presents the analysis of the combined data set. Exposure and effects information is used to estimate risks for lower trophic (e.g., invertebrates) and upper trophic (e.g., wildlife) receptors.

Lower Trophic Level Receptors

Potential risk to soil and sediment invertebrates was evaluated by comparing site concentrations to background and to ecological screening values. For soil, the USEPA Ecological Soil Screening Levels (EcoSSL) (USEPA, 2009a) were preferentially selected over Region IV values (USEPA, 2001). When no EcoSSL was available for a constituent, the Region 4 value was selected. For sediment, USEPA Region IV values (USEPA, 2001) were used. When no screening value was available, alternate sources were used, as noted in the tables. Hazard quotients (HQs) were calculated by dividing exposure concentrations by the ecological screening values.

Another line of evidence for the assessment of risk was the qualitative biota survey at each sampling location. Results are discussed for soil and sediment.

Soil

Endrin was not detected in any of the new soil samples. Overall, endrin was detected in 1 of 12 soil samples collected on the site and was not detected in the on-site background sample (**Table J-3**). The single detection was 3.9 ug/kg, with an associated HQ of 3.9. Endrin was also only detected in 1 of 10 sediment samples.

Gamma-BHC, also known as Lindane or gamma-1,2,3,4,5,6-hexachlorocyclohexane, was not detected in any of the new soil samples. Overall, gamma-BHC was detected in 2 of 12 soil samples and was not detected in the on-site background sample. Detected concentrations were 8.4 and 1.8 ug/kg, with associated HQs of 168 and 36, respectively. These HQs are based on the EPA Region 4 screening value of 0.05 ug/kg, taken from MHSPE (1994). This source is no longer valid; the Dutch values were updated in Swartjes (1999). The Target Value for total hexachlorocyclohexanes (i.e., alpha, beta, gamma) is 10 ug/kg, which is greater than the maximum concentration

of gamma-BHC at the site. Furthermore, Target Values are conservative because they relate to negligible risk for ecosystems. The Target Value is assumed to be 1% of the Maximal Permissible Risk (MPR) level for ecosystems, where MPR is the concentration expected to be hazardous for 5% of the species in the ecosystem, or the 95% protection level.

Soil litter depth was approximately 1 inch and the soil type was silty sand. Few organisms were observed during the qualitative survey (**Table J-4**). Given the lack of pesticide detections in the associated soil samples, the low abundance is likely driven by the soil conditions rather than contamination. This is further supported by the same lack of abundance in the site background sample.

Sediment

Analyses of sediments included 22 pesticides. Three of the pesticides were not detected (**Table J-5**). Detection frequency for the DDT family was about 50 percent. The others were detected in 30 percent or fewer of the samples. Most of the detections were associated with the three original sediment samples, not the new samples collected to further define extent.

Conservative estimate of the mean were calculated as exposure point concentrations (EPCs) using ProUCL Version 4.0.0.5 (USEPA, 2010). To be conservative, the maximum detected value or the maximum detection limit between the field duplicate and native sample was used when calculating the EPC. If a conservative estimate of the mean EPC could not be calculated, the arithmetic mean concentration was used as the EPC. The maximum detected concentration was retained as the EPC if the arithmetic mean was higher than the maximum.

Seven screening values were available from the EPA Region 4 set. HQs for the seven pesticides were well over 1. Because pesticides are intended to inhibit living things, this is not unexpected. However, there has been widespread legal application of pesticides at the Base through time. As a result, it is important to evaluate the relationship between site concentrations and measures of pesticide concentrations in background areas. To do that, the EPCs for detected pesticides in sediment were compared against the data from the single sediment background sample. In addition, they were compared to data compiled as part of a revised background study recently completed by CH2M HILL to reassess ambient concentrations in soils across the Base. The study is currently under review and remains unpublished to date.

Background thresholds values (BTVs) were derived in the draft revised background study report for developed and undeveloped areas. Because pesticide use could occur in both areas, the higher of the two BTVs was used to compare to Site UXO-2/Site 69 data.

The ratio of site EPC to background (sediment or soil BTV) was 2 or less for nine pesticides. A factor of 2 was selected for the evaluation because the EPC is a conservative estimate of the mean and pesticides applied legally would be expected to accumulate in sediments, resulting in higher concentrations than are present in soil.

The remaining 10 pesticides include delta-BHC, endosulfan I, endosulfan sulfate, endrin aldehyde, endrin ketone, gamma-chlordane, heptachlor, heptachlor epoxide, methoxychlor, and monocrotophos. EPA Region 4 ecological screening values were not available for these constituents. EPA Region 5 sediment screening levels (USEPA, 2003) were available for eight constituents (**Table J-5**). Two of the HQs were less than 1, three were less than 3, and three were greater than 3 (i.e., 3.99 for endosulfan I, 10 for heptachlor, and 8.4 for methoxychlor).

Endosulfan I was detected in two of ten samples (13 and 0.99 ug/kg). The maximum was selected as the EPC. If just the detected concentrations are averaged, the EPC would be 7, with an associated HQ of 2.1. Heptachlor was also only detected in two of ten samples (6 and 0.34 ug/kg). If just the detected concentrations are averaged, the EPC would be 3.2 ug/kg, with an associated HQ of 5.3. Methoxychlor was detected in only one of ten samples.

No screening values were available for endrin ketone or monocrotophos. HQs for endrin and endrin aldehyde were less than 1. Monocrotophos was previously detected in one of three sediment samples. Efforts to collect additional data were based on a concern over extent. Monocrotophos was not identified in any of the seven additional sediment samples.

Similar to soil, few organisms were observed during the qualitative survey of sediment (**Table J-4**) and no organisms were observed in the sediment background location. The physical characteristic of the locations is likely the primary cause. Three of the seven on-site locations had no standing water, but were moist or saturated. The remainder had standing water, but it was generally stagnant and shallow, and likely to have had low dissolved oxygen. In all but one sediment sample, total organic carbon (TOC) was high (ranging up to 36%). This is significant because TOC is generally the predominant factor influencing bioavailability of nonionic pesticides in the sediment environment (ITRC, 2011).

Upper Trophic Level Receptors

Previous food chain modeling suggested there was no significant risk associated with pesticides in soil or sediment (CH2M HILL, 2011b). For this BERA, food chain exposures were re-evaluated for sediment because there were additional detections of pesticides in the new sediment samples. In contrast, food chain exposures were not re-evaluated for soil because there were no new pesticide detections.

The only sediment contaminant not evaluated in the food chain modeling was monocrotophos. This pesticide is not expected to bioaccumulate in aquatic environments and does not accumulate in soil because it is biodegradable and photolabile (FAO/UNEP, 2005). Its half-life is less than 7 days in soil exposed to natural sunlight. Furthermore, monocrotophos was the only organophosphate pesticide detected at the site. No other organophosphate pesticides were detected in soil, subsurface soil, groundwater, sediment or surface water. Monocrotophos was only detected in sediment, in one of twelve samples, and was not detected in the new sample (SD-16) that was specifically located in the same general area to verify its presence.

Receptors selected for the food chain evaluation for sediment exposure were the American woodcock and raccoon. All ten sediment samples were used for the evaluation. The woodcock is unlikely to be exposed to pesticides in areas of standing water. However, these areas were included to represent a worst case scenario and because the water level varies with season, precipitation, and tides in the drainages that were sampled. This variation could result in exposure.

Risks to upper trophic level receptors were evaluated by modeling exposure to pesticides via the ingestion of constituents which have accumulated in prey. Incidental ingestion of sediment was also included when calculating exposure. Dietary items for which tissue concentrations were modeled included plants, invertebrates, and fish. The uptake of chemicals from the abiotic media into these food items was modeled based upon conservative assumptions.

Two HQs were developed. Each exposure estimate, based on the EPCs for sediment, was calculated and compared to two types of toxicity reference values (TRVs), no observed adverse effect levels (NOAELs) and lowest observed adverse effects levels (LOAELs). When HQs based on the NOAEL are below 1, there is high confidence of no significant risk. When HQs based on the LOAEL are above 1, risk may be present.

Exposure Assessment

Exposure Point Concentrations

EPCs are the environmental media concentrations of COPCs that receptors are assumed to encounter in an exposure area. Risk calculations were developed using the sediment EPCs.

Exposure Parameters

Receptor-specific inputs are presented in **Table J-6**. Central tendency estimates (e.g., mean, median, or midpoint) for body weight and ingestion rates from the scientific literature were used for each receptor. It was assumed that chemicals were 100 percent bioavailable to the receptor and that each receptor spent 100 percent of its time on the site (i.e., an area use factor [AUF] of 1.0 was assumed).

Concentrations in Food Items

The concentrations of COPCs in food items were estimated rather than measured. For the purposes of exposure estimation, partitioning of constituents from environmental media to prey was estimated from literature values. The conservative model assumptions included bioaccumulation factors (BAFs) from the literature. The BAFs and

other uptake or biotransfer factors used to estimate constituent concentrations in food items are provided in **Table J-7**. In all cases, it was assumed that tissue uptake occurs under steady state conditions.

Calculation of Chemical Intakes

Dietary exposure includes multiple pathways and requires modeling. The end product or exposure estimate resulting from exposure modeling for wildlife is a dosage (amount of chemical per kilogram receptor body weight per day [mg/kg/d]). Dietary exposure from food and incidental ingestion of soil was estimated using a generalized exposure model modified from Suter et al. (2000):

where:

Ej = total dietary exposure (mg/kg/d)
Medjk = concentration of chemical (j) in medium (k) (mg/kg dry weight)
Pk = ingestion rate of medium (k) as proportion of diet
FIR = species-specific food ingestion rate (kg food/kg body weight/d)
Bij = concentration of chemical (j) in biota type (i) (mg/kg dry weight)
Pi = proportion of biota type (i) in diet
AUF = area use factor (unitless)

Effects Assessment

Compilation of Toxicity Data

Currently available toxicological data were evaluated and a range of potential effects was determined by using procedures recommended by USEPA (1997). Data were extracted from original literature sources (when available) to verify levels of effects, quality of study design, magnitude of dose, and other study parameters. Sources for toxicity data included the following:

- Toxicological Benchmarks for Wildlife, produced for the Department of Energy at Oak Ridge National Laboratories (ORNL) (Sample et al., 1996)
- Ecological Soil Screening Values (Eco SSLs) (USEPA, 2007b; 2007c; 2009b)
- Peer reviewed scientific literature (i.e., Hill et al., 1975, Wiemeyer, 1996)

Ingestion toxicity reference values (TRVs) were selected for both chronic NOAEL and chronic LOAEL endpoints (**Tables J-8** and **J-9**). Because the risk assessment is based upon population- or community-level effects, no intraspecies uncertainty factors were applied. Taxonomic class-type uncertainty factors were also not applied because the TRVs selected were typically derived based upon data from a broad range of taxonomic groups.

Food chain COPCs were identified based upon a comparison of exposure doses from site-specific food chain modeling with the NOAEL- and LOAEL-based ingestion TRVs.

HQ Results

The results of food chain modeling are presented in **Table J-10**. The only HQ above 1 was the NOAEL-based HQ for endrin aldehyde exposure to the woodcock.

Risk Characterization

The section presents the characterization of risk for soil invertebrate, sediment invertebrates, and wildlife based on the data analysis and risk estimates.

Soil Invertebrates

Pesticides were infrequently detected in soil and concentrations were relatively low when compared to ecological benchmarks. It is unlikely pesticides occur at high enough concentration over a large enough area to significantly impact the local population of soil invertebrates to the extent that upper trophic level receptors are affected by the loss of a prey base. The pattern of low abundance observed in the biota survey was relatively consistent and

therefore unlikely to be a result of contamination; soil type is more likely to explain the soil invertebrate community characteristics.

Sediment Invertebrates

While there were a few elevated HQs, frequency of detection was limited. This translates to limited exposure when viewed on a site-wide basis. Most importantly, the very high sediment TOC concentrations likely limit the bioavailability of the pesticides in site sediments. It is unlikely pesticides occur at high enough concentration over a large enough area to significantly impact the local populations of sediment invertebrates to the extent that upper trophic level receptors are affected by the loss of a prey base. The qualitative biota survey was not useful as a diagnostic tool for risk given the variability in physical conditions of the sampled areas and the poor habitat conditions for benthic invertebrates (shallow, stagnant water, or no standing water).

Upper Trophic Level Receptors

The food chain modeling indicated that pesticides are not present at high enough concentrations over a large enough area to significantly impact populations of upper trophic level receptors. In addition, the biota survey suggests that use of the sampled areas may be limited for receptors that consume soil and sediment invertebrates.

Uncertainty

Uncertainties are inherent in all risk assessments. In general, risks are over-estimated in this evaluation through the use of conservative exposure, effects, and risk characterization assumptions described in the previous sections. A qualitative evaluation of the major general uncertainties associated with this assessment is presented below.

Effects Assessment Uncertainties

Literature-derived toxicity data based on laboratory studies were the only available toxicity data used to evaluate risk to all receptor groups. It was assumed that effects observed in laboratory species were indicative of effects that would occur in wild species. The suitability of this assumption is unknown.

The use of uncertainty factors in the development of TRVs is designed to ensure that the TRV is a conservative estimate of a toxicological effect level or endpoint. However, there is some additional uncertainty associated with extrapolating TRVs between toxicological endpoints, species, duration, and study conditions to site conditions.

Undetected chemicals for which no toxicological data were available were identified as posing no risk. Although some uncertainty is associated with this approach, it was assumed that if chemicals were present at ecologically relevant levels, they would be detected in some samples. Additionally, those analytes that were detected but lacked toxicological data were also identified as posing no risk though they were considered an uncertainty. A lack of toxicological data demonstrates that these chemicals historically have not been identified as significant ecological risk drivers. The lack of toxicological data indicates that it is unlikely these chemicals pose an ecological risk.

The TRVs developed from literature studies are usually based on a highly soluble and bioavailable form of the chemical. It is generally accepted that forms present in environmental media are not likely to be in a highly soluble form and, due to physical and chemical processes in the environment, are likely to be far less than 100 percent bioavailable. This difference between literature studies and site conditions may contribute to an over-estimation of potential exposure and risks from the COPCs.

Exposure Assessment Uncertainties

Bioavailability

The exposure dose estimates in this assessment assume that 100 percent of the chemical concentrations to which receptors are exposed are in the bioavailable form. However, most chemicals will not be 100 percent bioavailable. In cases where bioavailability is less than 100 percent, risk is over-estimated.

The exposure concentrations used in the evaluation of trophic transfer were assumed to remain constant for the duration of exposure. Physical, chemical, and biological processes that could reduce chemical concentrations and their bioavailability over time were not factored into the calculation of the exposure concentrations. Use of this additional conservative assumption is also likely to over-estimate exposure to the COPCs.

Analytical chemistry data collected within the exposure areas at Site UXO-2/Site 69 were assumed to adequately represent the exposure to wildlife and exposure concentrations were assumed to represent the distribution of constituents present. These assumptions could either under- or over-estimate risk.

Receptor Life History Data

No avian or mammalian life history data specific to the site were available; therefore, exposure parameters were either modeled based on allometric relationships (e.g., food ingestion rates) or were based on data from these same species in other portions of their range. Because diet composition as well as food, water, and sediment ingestion rates can differ among individuals and locations, published parameter values may not accurately reflect conditions at the site. Consequently, risk may be either over- or under-estimated.

Dietary Composition

Dietary compositions were simplified for the site receptors to estimate concentrations in food items using bioaccumulation models. It was assumed that concentrations were similar in comparable food types. The suitability of this assumption is unknown. Consequently, risk may be either over- or under-estimated.

Estimating Prey Tissue Concentration

There is uncertainty associated with the estimated chemical concentrations in tissue of prey. Prey tissue concentrations were estimated using literature-based values for all dietary items. Potential risks based on these tissue concentration estimates, therefore, could either be over- or under-estimated.

Conclusions

Pesticides in site soil and sediment are unlikely to pose significant risks to ecological receptors. Additionally, the suspected source area (Site 69) is being evaluated for remedial alternatives which would eliminate any significant exposure to ecological receptors at Site 69 and further surface transport to UXO-2.

References

Beyer, W.N. and C.D. Gish. 1980. Persistence in earthworms and potential hazards to birds of soil applied DDT, dieldrin, and heptachlor. Journal of Applied Ecology. 17:295-307.

Beyer, W.N., E.E. Connor, and S. Gerould. 1994. Estimates of soil ingestion by wildlife. Journal of Wildlife Management. 58:375-382.

CH2M HILL. 2011a. *Draft Preliminary Assessment/Site Inspection Report MMRP Site UXO-02, Chemical Dump, Marine Corps Base Camp Lejeune, Jacksonville, North Carolina*. November.

CH2M HILL. 2011b. *Supplemental Investigation, Site 69, Operable Unit No. 14 – Rifle Range Unnamed Explosive Contaminated Range, (ASR #2.201) Marine Corps Base Camp Lejeune, Jacksonville, North Carolina.* May.

CH2M HILL. 2011c. *Site-specific Work Plan Addendum for Intrusive Investigation for Military Munitions Response Program Sites:UXO-01 – Former Live Hand Grenade Course (ASR #2.23), UXO-01 - Former Gas Chamber (ASR #2.79a, b, c), UXO-02 - Former Unnamed Explosive Contaminated Range (ASR #2.201) UXO-07 – Former Practice Hand Grenade Course (ASR #2.77a and #2.77b), UXO-11 - Former B-5 Practice Hand Grenade Course (ASR #2.81), UXO-14 - Former Indoor Pistol Range (ASR #2.199) and Former Gas Chamber (ASR #2.200), UXO-17 - Former Firing Position 2 (ASR #2.12), UXO-21 - Former D-Area Gas Chamber (2D MAR DIV) (ASR #2.204).* June.

Conover, M.R. 1989. Potential compounds for establishing conditioned food aversions in raccoons. Wildlife Society Bulletin. 17:430-435.

Dunning, J.B., Jr. (editor). 1993. CRC handbook of avian body masses. CRC Press, Boca Raton, FL. 371 pp.

Edwards, C.A. and P.J. Bohlen. 1992. The effects of toxic chemicals on earthworms. Reviews of Environmental Contamination and Toxicology. 125:23-99.

Food and Agriculture Organization of the United Nations and the United Nations Environment Programme (FAO/UNEP). 2005. Decision Guidance Document, Monocrotophos. Secretariat for the Rotterdam Convention on the Prior Informed Consent Procedure for Certain Hazardous Chemicals and Pesticides in International Trade.

Hill, E.F., R.G. Heath, J.W. Spann, and J.D. Williams. 1975. Lethal dietary toxicities of environmental pollutants to birds. U.S. Fish and Wildlife Service Special Scientific Report - Wildlife No. 191. 61 pp.

Interstate Technology Regulatory Council (ITRC). 2011. Incorporating Bioavailability Considerations into the Evaluation of Contaminated Sediments. Appendix B: Categories of Contaminants. http://www.itrcweb.org/contseds-bioavailability/consed_app_b.htm

Ministry of Housing, Spatial Planning and Environment (MHSPE). 1994. Intervention values and Target Values – Soil Quality Standards. Directorate-General for Environmental Protection, Department of Soil Protection, The Hague, Netherlands. 9 May. DBO/07494013.

Romijn, C.A.F.M., R. Luttik, and J.H. Canton. 1994. Presentation of a general algorithm to include effect assessment on secondary poisoning in the derivation of environmental quality criteria. Part 2. Terrestrial food chains. Ecotoxicology and Environmental Safety. 27:107-127.

Sample, B.E., D.M. Opresko, and G.W. Suter II. 1996. Toxicological benchmarks for wildlife: 1996 revision. Environmental Restoration Division, ORNL Environmental Restoration Program. ES/ER/TM-86/R3.

Silva, M. and J.A. Downing. 1995. CRC handbook of mammalian body masses. CRC Press, Boca Raton, FL. 359 pp.

Swartjes, F.A. 1999. Risk-based assessment of soil and groundwater quality in the Netherlands: Standards and remediation urgency. Society for Risk Analysis. Vol. 19, No. 6.

Suter, G. W., II, R. A. Efroymson, B. E. Sample, and D. S. Jones. 2000. *Ecological Risk Assessment for Contaminated Sites*. CRC Press.

U.S. Army Corps of Engineers (USACOE). 2010. BSAF Database. http://el.erdc.usace.army.mil/ bsafnew/bsaf.html. Accessed February 2010.

U.S. Environmental Protection Agency (USEPA). 1993a. Wildlife exposure factors handbook. Volume I of II. EPA/600/R-93/187a.

U.S. Environmental Protection Agency (USEPA). 1995. Great Lakes Water Quality Initiative criteria documents for the protection of wildlife: DDT, mercury, 2,3,7,8-TCDD, PCBs. EPA/820/B-95/008.

USEPA. 2001. *Supplemental Guidance to RAGS: Region 4 Bulletins, Ecological Risk Assessment.* Originally published November 1995. Website version last updated November 30, 2001: http://www.epa.gov/region4/waste/ots/ecolbul.htm.

USEPA. 2003. Ecological Screening Levels. Region 5, RCRA. August 22.

USEPA. 2007a. *Guidance for developing ecological soil screening levels. Attachment 4-1.* OSWER Directive 9285.7-55. April.

USEPA. 2007b. Ecological Soil Screening Value for DDT and Metabolites. OSWER Directive 9285.7-57. April.

USEPA. 2007c. Interim Final Ecological Soil Screening Value for Dieldrin. OSWER Directive 9285.7-56. April.

USEPA. 2009a. Biota-Sediment Accumulation Factor Data Set, Version 1.0. http://www.epa.gov/med/Prods_Pubs/bsaf.htm. Accessed June 2009.

USEPA. 2009b. *Ecological Soil Screening Levels*. http://www.epa.gov/ecotox/ecossl/

USEPA. 2010. *ProUCL Version 4.1 Technical Guide (Draft),* Office of Research and Development, May.

Wiemeyer, S.N. 1996. Other organochlorine pesticides in birds. Pages 99-115 IN Beyer, W.N., G.H. Heinz, and A.W. Redmon-Norwood (eds). Environmental contaminants in wildlife: interpreting tissue concentrations. Lewis Publishers, Boca Raton, FL. 494 pp.

TABLE J-1

Site UXO-2/Site 69 Assessment Endpoints, Measurement Endpoints, and Risk Questions - Step 3b

Site UXO-02 Expanded SI Report

MCIEAST-MCB CAMLEJ, North Carolina

Assessment Endpoint	Guild	Exposure Area	Measurement Endpoint	Risk Questions
Survival, growth, and reproduction of the soil invertebrate community	Soil invertebrates (terrestrial)	Forested areas near Site 69 that could be subject to stormwater runoff	Comparison of the ratio of central tendency exposure concentration and toxicity benchmark to a Hazard Quotient of 1.	Are pesticides present at high enough concentrations over a large enough area to significantly impact the local population of soil invertebrates to the extent that upper trophic level receptors are affected by the loss of a prey base?
			Qualitative field assessment of the health of the soil invertebrate community and analysis of the relationship between presence/absence of organisms and contamination gradients.	
Survival, growth, and reproduction of the benthic invertebrate community	Benthic invertebrates (tidal wetland)	Multiple tidal wetlands located downgradient of Site 69	Comparison of the ratio of central tendency exposure concentration and toxicity benchmark to a Hazard Quotient of 1.	Are pesticides present at high enough concentrations over a large enough area to significantly impact the local population of benthic invertebrates to the extent that other aquatic and terrestrial receptors are affected by the loss of a prey base?
			Qualitative field assessment of the health of the benthic invertebrate community and analysis of the relationship between presence/absence of organisms and contamination gradients.	
Survival, growth, and reproduction of upper trophic level receptors	Multiple	Locations downgradient of Site 69 that are subject to stormwater runoff	Previous ERA work indicated no risk to upper trophic level receptors. Exposure concentrations based on new data will be compared to those used in previous ERA efforts to determine if further risk assessment is warranted.	Are pesticides present at high enough concentrations over a large enough area to significantly impact populations of upper trophic level receptors?

Generated By: Sara Kent/ATL
Checked by: Jon Weier/ATL

TABLE J-2

Samples Used in the Baseline Ecological Risk Assessment for Site UXO-2

Site UXO-02 Expanded SI Report

MCIEAST-MCB CAMLEJ, North Carolina

Sample ID	Sample Depth (ft bgs)	Date
Surface Soil		
IR69-SS01-10A	0–0.5	3/4/2010
IR69-SS01D-10A	0–0.5	3/4/2010
IR69-SS02-10A	0–0.5	2/28/2010
IR69-SS03-10A	0–0.5	3/4/2010
IR69-SS04-10A	0–0.5	3/4/2010
IR69-SS05-10A	0–0.5	3/4/2010
IR69-SS06-10A	0–0.5	3/4/2010
MR02-SS185-11C	0 - 0.16	7/12/2011
MR02-SS186-11C	0 - 0.16	7/12/2011
MR02-SS187-11C	0 - 0.16	7/12/2011
MR02-SS188-11C	0 - 0.16	7/12/2011
MR02-SS188D-11C	0 - 0.16	7/12/2011
MR02-SS189-11C	0 - 0.16	7/12/2011
MR02-SS190-11C	0 - 0.16	7/12/2011
MR02-SS191-11C *	0 - 0.16	7/12/2011
Sediment		
IR69-SD01-10A	0–0.5	3/14/2010
IR69-SD02-10A	0–0.5	3/15/2010
IR69-SD03-10A	0–0.5	3/15/2010
MR02-SD11-11C	0–0.5	7/12/2011
MR02-SD12-11C	0–0.5	7/12/2011
MR02-SD13-11C	0–0.5	7/12/2011
MR02-SD14-11C	0–0.5	7/12/2011
MR02-SD15-11C	0–0.5	7/12/2011
MR02-SD16-11C	0–0.5	7/12/2011
MR02-SD17-11C	0–0.5	7/12/2011
MR02-SD18BG-11C*	0–0.5	7/12/2011

Notes:

***** background sample

ft bgs - feet below ground surface

NA - not applicable

Generated By: Sara Kent/ATL

Checked by: Jon Weier/ATL

TABLE J-3

Site UXO-2/Site 69 Direct Exposure Evaluation for Soil

Site UXO-02 Expanded SI Report

MCIEAST-MCB CAMLEJ, North Carolina

Chemical	Frequency of Detection	Maximum Concentration Detected	Sample ID of Maximum Detected Concentration	Ecological Screening Value (ESV)	Frequency of Exceedance[1]	Hazard Quotient (HQ)[2]
Pesticides (UG/KG)						
Endrin	1 / 12	3.9	IR69-SS05	1.00	1 / 12	3.9
gamma-BHC (Lindane)	2 / 12	8.4	IR69-SS04	0.050	2 / 12	168

NOTES

1 - Count of detected samples exceeding or equaling Screening Value

2 - For endrin, HQ is based on single detection. For gamma-BHC, HQ based on maximum detected concentration.

HQ - Hazard Quotient

ESV - Ecological Screening Value

mg/kg - micrograms per kilogram

Generated by: Sara Kent/ATL

Checked by: Jon Weier/ATL

TABLE J-4

Site UXO-2/Site 69 Qualitative Biota Survey

Site UXO-02 Expanded SI Report

MCIEAST-MCB CAMLEJ, North Carolina

Sample		Order (No. of Individuals)					
Surface Soil	**Litter Depth (inches)**	**Coleoptera (beetles)**	**Dermaptera (earwigs)**	**Hymenoptera (ants)**	**Diptera (flies)**	**Araneae (spiders)**	
MR02-SS185-11C	1	0	0	0	0	0	
MR02-SS186-11C	1	1	1	0	0	1	
MR02-SS187-11C	1	0	0	1	0	0	
MR02-SS188-11C	1	0	0	>10	0	0	
MR02-SS189-11C	2	1	0	0	1	1	
MR02-SS190-11C	1	0	0	3	0	0	
MR02-SS191-11C [1]	1	0	0	0	0	1	

				Order (No. of Individuals)				
Sediment	**Water Depth (inches)**	**Type [2]**	**TOC**	**Coleoptera (beetles)**	**Diptera (flies)**	**Decapoda (crabs)**	**Odonata (dragonflies)**	**Fish**
MR02-SD11-11C	4	tidal wetland	25%	0	0	0	1	2
MR02-SD12-11C	2	wetland	36%	0	0	0	0	0
MR02-SD13-11C	0	tidal wetland	23%	0	0	5	0	0
MR02-SD14-11C	0	wetland	22%	0	0	0	0	0
MR02-SD15-11C	4	wetland	35%	0	0	0	0	0
MR02-SD16-11C	0	wetland	2%	0	1	0	0	0
MR02-SD17-11C	6	freshwater pond	15%	1	1	0	0	0
MR02-SD18BG-11C[1]	2	wetland	29%	0	0	0	0	0

Notes:

[1] background sample

[2] Salinity was not measured. Locations identifed as wetland may be tidally influenced during some periods.

TOC - total organic carbon

Generated by: Jon Weier/ATL

Checked by: Rachel Zajac/RDU

TABLE J-5

Site UXO-2/Site 69 Direct Exposure Evaluation for Sediment

Site UXO-02 Expanded SI Report

MCIEAST-MCB CAMLEJ, North Carolina

Chemical	Range of Non-Detect Values			Frequency of Detection			Maximum Concentration Detected	Sample ID of Maximum Detected Concentration	Arithmetic Mean	Exposure Point Concentration (EPC)	EPC Basis[1]	EPA Region 4 ESV	EPC Hazard Quotient (Region 4)	Background Sediment Sample	BTV	Ratio of EPC to Background Sediment and BTV	EPA Region 5 ESL for Sediment	EPC Hazard Quotient (Region 5)	Comment
Pesticides (UG/KG)																			
4,4'-DDD	4.40	-	100	5	/	10	340	MR02-SD13-11C	78.7	150	95% KM (t) UCL	1.22	123.0	820	14.8	0.2/10.1	4.88	30.74	Consistent with background
4,4'-DDE	15.0	-	100	6	/	10	330	MR02-SD13-11C	74.7	139	95% KM (t) UCL	2.07	67.1	120	78.4	1.2/1.8	3.16	43.99	Consistent with background
4,4'-DDT	15.0	-	100	5	/	9	33.0	MR02-SD14-11C	20.7	23.9	95% KM (t) UCL	1.19	20.1	20	49.8	1.2/0.5	4.16	5.75	Consistent with background
Aldrin	2.30	-	100	1	/	10	2.30	IR69-SD01-10A	16.0	2.3	Maximum Result	NSV	--	ND	1.83	1.3	2.00	1.15	Consistent with background
alpha-BHC	2.30	-	100	0	/	10	--	--	--	--	--	NSV	--	ND	--	--	--	--	Not detected
alpha-Chlordane	9.70	-	100	2	/	10	6.00	IR69-SD01-10A	16.4	6	95% KM (BCA) UCL	0.50	12.0	ND	4.81	1.2	3.24	1.85	Consistent with background
beta-BHC	9.70	-	100	2	/	10	2.30	IR69-SD01-10A	15.1	2.3	95% KM (BCA) UCL	NSV	--	ND	2.07	1.1	5.00	0.46	Consistent with background
delta-BHC	2.30	-	100	1	/	10	6.70	IR69-SD01-10A	16.5	6.7	Maximum Result	NSV	--	ND	1.85	3.6	71500.00	0.00	Low HQ
Dieldrin	9.70	-	100	2	/	10	2.70	IR69-SD01-10A	17.8	2.7	Maximum Result	0.020	135.0	ND	3.17	0.9	1.90	1.42	Consistent with background
Endosulfan I	9.70	-	100	2	/	10	13.0	IR69-SD01-10A	17.1	13	Maximum Result	NSV	--	ND	2.1	6.2	3.26	3.99	See text for discussion
Endosulfan II	4.40	-	100	0	/	10	--	--	--	--	--	NSV	--	ND	--	--	--	--	Not detected
Endosulfan sulfate	9.70	-	100	3	/	10	170	IR69-SD02-10A	32.2	63.4	95% KM (t) UCL	NSV	--	ND	8.92	7.1	34.60	1.83	Low HQ
Endrin	9.70	-	100	1	/	10	0.97	IR69-SD03-10A	18.2	0.97	Maximum Result	0.020	48.5	ND	2.98	0.3	2.22	0.44	Consistent with background
Endrin aldehyde	4.40	-	100	2	/	10	560	IR69-SD02-10A	70.6	70.6	Arithmetic Mean	NSV	--	ND	2.51	28.1	480.00	0.15	Low HQ
Endrin ketone	9.70	-	100	3	/	10	130	IR69-SD02-10A	27.8	48.2	95% KM (t) UCL	NSV	--	ND	6.24	7.7	NA	--	See text for discussion
gamma-BHC (Lindane)	7.40	-	100	1	/	10	2.00	IR69-SD03-10A	16.3	2	Maximum Result	0.32	6.3	ND	1.25	1.6	2.37	0.84	Consistent with background
gamma-Chlordane	9.70	-	100	3	/	10	9.10	IR69-SD01-10A	15.4	9.1	Maximum Result	NSV	--	ND	2.54	3.6	3.24	2.81	Low HQ
Heptachlor	9.70	-	100	2	/	10	6.00	IR69-SD01-10A	16.3	6	Maximum Result	NSV	--	ND	0.666	9.0	0.60	10.00	See text for discussion
Heptachlor epoxide	2.30	-	100	1	/	10	3.70	IR69-SD01-10A	16.2	3.7	Maximum Result	NSV	--	ND	1.71	2.2	2.47	1.50	Low HQ
Methoxychlor	9.70	-	100	1	/	10	150	IR69-SD02-10A	33.8	114	Too Few Unique Detected Values[2]	NSV	--	ND	NA	--	13.60	8.38	See text for discussion
Monocrotophos	150	-	1,900	1	/	9	420	IR69-SD03-10A	362	362	Arithmetic Mean	NSV	--	ND	NA	--	NA	--	See text for discussion
Trichloronate	46.0	-	2,100	0	/	10	--	--	--	--	--	NSV	--	ND	--	--	--	--	Not detected

NOTES

[1] - If a conservative estimate of the mean could not be calculated, the arithmetic mean concentration was used as the EPC. The maximum detected concentration was retained as the EPC if the arithmetic mean was higher than the maximum.

[2] - ProUCL Version 4 does not offer a calculated UCL when there are too few unique detected results (one or sometimes more than one). In these instances, a 95% Chebyshev UCL using a proxy value of 1/2 the detection limit for NDs is calculated.

BTV - Background Threshold Value for Soil
EPC - Exposure Point Concentration
ESV - Ecological Screening Value
ESL - Ecological Screening Level
HQ - Hazard Quotient
ND - Non-detect
NSV - No Screening Value
UCL - Upper Confidence Limit
mg/kg - micrograms per kilogram

Generated by: Sara Kent/ATL
Checked by: Jon Weier/ATL

TABLE J-6

Site UXO-2/Site 69 Exposure Parameters for Upper Trophic Level Terrestrial Ecological Receptors

Site UXO-02 Expanded SI Report

MCIEAST-MCB CAMLEJ, North Carolina

Receptor	Body Weight (kg)		Food Ingestion Rate (kg/day - dry)							Soil/ Sediment Ingestion (percent)	
	Value	Reference	Value	Reference	Terr Inv	Aq Plants	Aq Inv	Fish	Reference	Value	Reference
Mammals											
Raccoon	5.9400	Silva and Downing 1995	0.10308	Conover 1989	0.0	40.0	43.6	7.0	USEPA 1993	9.4	Beyer et al. 1994
Birds											
American woodcock	0.1980	Dunning 1993	0.02313	USEPA 1993	89.6	0.0	0.0	0.0	USEPA 1993	10.4	Beyer et al. 1994

Notes

kg - kilogram

kg/day-dry - kilogram per day - dry weight

Generated by: Sara Kent/ATL

Checked by: Jon Weier/ATL

TABLE J-7

Site UXO-2/Site 69 Bioaccumulation Factors for Aquatic Plants, Benthic invertebrates, Fish, and Soil Invertebrates

Site UXO-02 Expanded SI Report

MCIEAST-MCB CAMLEJ, North Carolina

Chemical	Sediment-Plant BAF (dry weight)			Sediment-Plant Regression			Sediment-Invertebrate BAF (dry weight)			Sediment-Fish (dry weight)			Soil-Invertebrate BAF (dry weight)		
	Value	Basis	Reference	B0	B1	Reference	Value	Basis	Reference	Value	Basis	Reference	Value	Basis	Reference
Pesticides															
4,4'-DDD	--	Regression	USEPA 2007a	-2.5119	0.7524	USEPA 2007a	10.76	Single value	USACOE 2010	17.73	Median	USEPA 2009a; USACOE 2010	3.760	Median	USEPA 2007a
4,4'-DDE	--	Regression	USEPA 2007a	-2.5119	0.7524	USEPA 2007a	10.76	Single value	DDD value	29.18	Median	USEPA 2009a; USACOE 2010	13.100	Median	USEPA 2007a
4,4'-DDT	--	Regression	USEPA 2007a	-2.5119	0.7524	USEPA 2007a	1.419	Median	USACOE 2010	19.12	Median	USEPA 2009a; USACOE 2010	14.200	Median	USEPA 2007a
Aldrin	0.139	10^((-0.4057*log Kow)+1.781)	USEPA 2007a	--	--	--	2.960	Single value	USACOE 2010	43.20	Median	USEPA 1997c	3.300	Mean	Edwards and Bohlen 1992
alpha-Chlordane	0.165	10^((-0.4057*log Kow)+1.781)	USEPA 2007a	--	--	--	10.76	Single value	USACOE 2010	24.40	Median	USEPA 2009a; USACOE 2010	4.000	Mean	Edwards and Bohlen 1992
beta-BHC	1.719	10^((-0.4057*log Kow)+1.781)	USEPA 2007a	--	--	--	5.215	Single value	alpha-BHC value	43.20	Median	USEPA 1997c	1.000	Assumed	--
delta-BHC	1.311	10^((-0.4057*log Kow)+1.781)	USEPA 2007a	--	--	--	5.215	Single value	alpha-BHC value	43.20	Median	USEPA 1997c	1.000	Assumed	--
Dieldrin	1.5	90th percentile	USEPA 2007a	--	--	--	4.920	Geometric mean	Standley 1997	18.41	Median	USEPA 2009a; USACOE 2010	13.500	Median	USEPA 2007a
Endosulfan I	1.687	10^((-0.4057*log Kow)+1.781)	USEPA 2007a	--	--	--	0.416	Single value	USACOE 2010 (endosulfan sulfate)	43.20	Median	USEPA 1997c	1.000	Assumed	--
Endosulfan sulfate	1.905	10^((-0.4057*log Kow)+1.781)	USEPA 2007a	--	--	--	0.416	Single value	USACOE 2010	43.20	Median	USEPA 1997c	1.000	Assumed	--
Endrin	0.535	10^((-0.4057*log Kow)+1.781)	USEPA 2007a	--	--	--	3.432	Single value	USACOE 2010 (endrin aldehyde)	43.20	Median	USEPA 1997c	3.600	Mean	Edwards and Bohlen 1992
Endrin aldehyde	1.439	10^((-0.4057*log Kow)+1.781)	USEPA 2007a	--	--	--	3.432	Single value	USACOE 2010	43.20	Median	USEPA 1997c	3.600	Mean	Endrin value
Endrin ketone	0.571	10^((-0.4057*log Kow)+1.781)	USEPA 2007a	--	--	--	3.432	Single value	USACOE 2010 (endrin aldehyde)	43.20	Median	USEPA 1997c	3.600	Mean	Endrin value
gamma-BHC (Lindane)	1.852	10^((-0.4057*log Kow)+1.781)	USEPA 2007a	--	--	--	2.457	Median	USACOE 2010	43.20	Median	USEPA 1997c	13.700	Mean	Romijn et al. 1994
gamma-Chlordane	0.165	10^((-0.4057*log Kow)+1.781)	USEPA 2007a	--	--	--	15.17	Single value	USACOE 2010	27.33	Median	USEPA 2009a; USACOE 2010	4.000	Mean	Edwards and Bohlen 1992
Heptachlor	0.174	10^((-0.4057*log Kow)+1.781)	USEPA 2007a	--	--	--	0.326	Median	USACOE 2010	43.20	Median	USEPA 1997c	3.000	Mean	Edwards and Bohlen 1992
Heptachlor epoxide	0.566	10^((-0.4057*log Kow)+1.781)	USEPA 2007a	--	--	--	2.128	Single value	USACOE 2010	43.20	Median	USEPA 1997c	10.000	Mean	Beyer and Gish 1980
Methoxychlor	0.525	10^((-0.4057*log Kow)+1.781)	USEPA 2007a	--	--	--	1.000	Assumed	--	43.20	Median	USEPA 1997c	1.000	Assumed	--

Generated by: Sara Kent/ATL
Checked by: Jon Weier/ATL

TABLE J-8

Site UXO-2/Site 69 Toxicity Reference Values for Mammals

Site UXO-02 Expanded SI Report

MCIEAST-MCB CAMLEJ, North Carolina

Chemical	Chemical Form	Test Organism	Duration	Critical Life Stage?	Exposure Route	Effect/Endpoint	NOAEL (mg/kg/d)	MATC (mg/kg/d)	LOAEL (mg/kg/d)	Reference
Pesticides/PCBs										
4,4'-DDD	--	rat	chronic	--	oral	--	0.147	0.329	0.735	USEPA 2007b
4,4'-DDE	--	rat	chronic	--	oral	--	0.147	0.329	0.735	USEPA 2007b
4,4'-DDT	--	rat	chronic	--	oral	--	0.147	0.329	0.735	USEPA 2007b
Aldrin	--	rat	3 generations	Yes	oral in diet	reproduction	0.20	0.45	1.00	Sample et al. 1996
alpha-Chlordane	--	mouse	6 generations	Yes	oral in diet	reproduction	4.58	6.48	9.16	Sample et al. 1996
beta-BHC	BHC - mixed isomers	rat	4 generations	Yes	oral in diet	reproduction	1.60	2.26	3.20	Sample et al. 1996
delta-BHC	BHC - mixed isomers	rat	4 generations	Yes	oral in diet	reproduction	1.60	2.26	3.20	Sample et al. 1996
Dieldrin	--	rat	chronic	--	oral	--	0.015	0.021	0.030	USEPA 2007c
Endosulfan I	Endosulfan	rat	30 days	No	oral (gavage)	reproduction	0.15	0.34	0.75	Sample et al. 1996
Endosulfan sulfate	Endosulfan	rat	30 days	No	oral (gavage)	fertility	0.15	0.34	0.75	Endosulfan value
Endrin	--	mouse	120 days	Yes	oral in diet	reproduction	0.184	0.411	0.920	Sample et al. 1996
Endrin aldehyde	--	mouse	120 days	Yes	oral in diet	reproduction	0.184	0.411	0.920	Endrin value
Endrin ketone	--	mouse	120 days	Yes	oral in diet	reproduction	0.184	0.411	0.920	Endrin value
gamma-BHC (Lindane)	--	rat	3 generations	Yes	oral in diet	reproduction	8.00	17.9	40.0	Sample et al. 1996
gamma-Chlordane	--	mouse	6 generations	Yes	oral in diet	reproduction	4.58	6.48	9.16	Sample et al. 1996
Heptachlor	--	mink	181 days	Yes	oral in diet	reproduction	0.20	0.45	1.00	Sample et al. 1996
Heptachlor epoxide	--	mink	181 days	Yes	oral in diet	reproduction	0.20	0.45	1.00	Heptachlor value
Methoxychlor	--	rat	11 months	Yes	oral in diet	reproduction	4.00	5.66	8.00	Sample et al. 1996

Generated by: Sara Kent/ATL
Checked by: Jon Weier/ATL

TABLE J-9

Site UXO-2/Site 69 Toxicity Reference Values for Birds

Site UXO-02 Expanded SI Report

MCIEAST-MCB CAMLEJ, North Carolina

Chemical	Chemical Form	Test Organism	Duration	Critical Life Stage?	Exposure Route	Effect/Endpoint	NOAEL (mg/kg/d)	MATC (mg/kg/d)	LOAEL (mg/kg/d)	Reference
Pesticides/PCBs										
4,4'-DDD	--	Japanese quail	3 generations	Yes	oral in diet	reproduction	0.50	1.58	5.00	DDT value
4,4'-DDE	--	Japanese quail	3 generations	Yes	oral in diet	reproduction	0.50	1.58	5.00	DDT value
4,4'-DDT	--	Japanese quail	3 generations	Yes	oral in diet	reproduction	0.50	1.58	5.00	USEPA 1995
Aldrin	--	ring-necked pheasant	5 days	No	oral in diet	survival	0.07	0.16	0.35	Hill et al. 1975
alpha-Chlordane	--	red-winged blackbird	84 days	Yes	oral in diet	survival	2.14	4.79	10.7	Sample et al. 1996
beta-BHC	BHC - mixed isomers	Japanese quail	90 days	Yes	oral in diet	reproduction	0.56	1.13	2.25	Sample et al. 1996
delta-BHC	BHC - mixed isomers	Japanese quail	90 days	Yes	oral in diet	reproduction	0.56	1.13	2.25	Sample et al. 1996
Dieldrin	--	mallard	chronic	--	oral	--	0.07	0.52	3.78	USEPA 2007c
Endosulfan I	Endosulfan	gray partridge	4 weeks	Yes	oral in diet	reproduction	10.0	22.4	50.0	Sample et al. 1996
Endosulfan sulfate	Endosulfan	gray partridge	4 weeks	Yes	oral in diet	reproduction	10.0	22.4	50.0	Endosulfan value
Endrin	--	screech owl	>83 days	Yes	oral in diet	reproduction	0.02	0.05	0.10	Sample et al. 1996
Endrin aldehyde	--	screech owl	>83 days	Yes	oral in diet	reproduction	0.02	0.05	0.10	Endrin value
Endrin ketone	--	screech owl	>83 days	Yes	oral in diet	reproduction	0.02	0.05	0.10	Endrin value
gamma-BHC (Lindane)	--	mallard	8 weeks	Yes	oral (gavage)	reproduction	4.00	8.94	20.0	Sample et al. 1996
gamma-Chlordane	--	red-winged blackbird	84 days	Yes	oral in diet	survival	2.14	4.79	10.7	Sample et al. 1996
Heptachlor	--	ring-necked pheasant	5 days	No	oral in diet	survival	0.28	0.62	1.38	Hill et al. 1975
Heptachlor epoxide	--	ring-necked pheasant	5 days	No	oral in diet	survival	0.28	0.62	1.38	Heptachor value
Methoxychlor	--	chicken	16 weeks	Yes	oral in diet	reproduction	355	794	1,775	Wiemeyer 1996

Generated by: Sara Kent/ATL
Checked by: Jon Weier/ATL

TABLE J-10

Hazard Quotients for Wildlife Receptors Exposed to Sediment Pesticides at Site UXO-2/Site 6

Site UXO-02 Expanded SI Report

MCIEAST-MCB CAMLEJ, North Carolina

Chemical	Hazard Quotients			
	American woodcock		Raccoon	
	NOAEL	LOAEL	NOAEL	LOAEL
Pesticides				
4,4'-DDD	0.18	0.02	0.11	0.02
4,4'-DDE	0.44	0.04	0.11	0.02
4,4'-DDT	0.07	0.01	0.01	0.001
Aldrin	0.01	0.002	0.001	1.78E-04
alpha-Chlordane	0.001	2.42E-04	1.49E-04	7.46E-05
beta-BHC	4.77E-04	1.19E-04	1.52E-04	7.58E-05
delta-BHC	0.001	3.48E-04	4.30E-04	2.15E-04
Dieldrin	0.05	0.001	0.01	0.01
Endosulfan I	1.52E-04	3.04E-05	0.006	0.001
Endosulfan sulfate	7.41E-04	1.48E-04	0.03	0.01
Endrin	0.02	0.004	4.42E-04	8.83E-05
Endrin aldehyde	**1.32**	0.26	0.03	0.01
Endrin ketone	0.90	0.18	0.02	0.004
gamma-BHC (Lindane)	7.23E-04	1.45E-04	2.14E-05	4.28E-06
gamma-Chlordane	0.002	3.66E-04	3.00E-04	1.50E-04
Heptachlor	0.01	0.001	0.002	3.47E-04
Heptachlor epoxide	0.01	0.003	0.001	2.74E-04
Methoxychlor	3.75E-05	7.50E-06	0.002	0.001

Notes:
HQs in **bold** exceed one
LOAEL - Lowest observed effect level
NOAEL - No observed effect level

Generated by: Sara Kent/ATL
Checked by: Jon Weier/ATL