M00146.AR.005776
MCAS CHERRY POINT
5090.3a

DRAFT WORK PLAN RAC ACTION FOR STATEMENT OF WORK DESIGN TANK FARM C

MCAS CHERRY POINT NC

4/1/1998

J. A. JONES ENVIRONMENTAL SERVICES COMPANY

DRAFT WORK PLAN
Delivery Order No. 050

RAC Action for Statement of Work Design
Tank Farm C
Marine Corps Air Station
Cherry Point, North Carolina

Prepared for

The Atlantic Division, Naval Facilities Engineering Command

April 1998

Prepared by

J.A. Jones Environmental Services Company
8936 Western Way, Suite 10
Jacksonville, Florida 32256
J.A. Jones No. 005.050

DATA TRANSMITTAL

Contract No.	Transmittal Type	Date
N62470-93-D-3033	Pre-construction	4/30/98
Delivery Order No. 050	Transmittal No.	1

Project Title & Location: **RAC Action for Statement of Work Design**
Tank Farm C, MCAS, Cherry Point, North Carolina

To:
Mr. John Kresky
NTR
Atlantic Division NAVFACENGCOM
1510 Gilbert Street
Norfolk, VA 23511-2699
(757) 322-4765
(757) 322-4805 FAX

From:
JoAnne T. (Pearl) Snelson, P.E.
Senior Project Engineer
J.A. Jones Environmental Services Company
8936 Western Way, Suite 10
Jacksonville, FL 32256
(904) 363-0911
(904) 363-1421 FAX

Reviewers Use Only
*** Action Codes**
A - Approved
D - Disapproved
AN - Approved as Noted
RA - Receipt Acknowledged
C- Comments
R - Resubmit

☐ Contractor Approved ☐ A&E Approved ☐ ROICC Approved ☑ NTR Approved

Item No.	Spec. Sect. No.	Para. No.	SD No.	Description of Submittal	No. Copies	*Action Code	Reviewers Initials, Code & Date
1	01115	1.2.1.1	9	Work Plan - Draft, Containing:	2		
3	01115	1.2.1.1.a.2	9	Narrative			
4	01115	1.2.1.1.a.1	9	Description of Work Tasks			
5	01115	1.2.1.1.a.2	9	Construction Schedule			
6	01115	1.2.1.1.a.3	9	Pipe Installation			
7	01115	1.2.1.1.a.4	9	Storage, Transportation, and Treatment Requirements			
8	01115	1.2.1.1.a.5	9	System Control Logic			
9	01115	1.2.1.1.a.6	9	Construction Permits Required			
10	01115	1.2.1.1.b	9	Technical Specification Modifications			
11	01115	1.2.1.1.f	9	Environmental Protection Plan			
12	01115	1.2.1.1.g	9	Health and Safety Plan			
13	01115	1.2.1.1.h	9	Quality Control Plan			
14	01115	1.2.1.1.h.2	9	Submittal Register			
16	01115	1.2.1.1.i	9	Sampling and Analysis Plan			
17	01115	1.2.1.1.d.1	4	Erosion Control Plan Drawings			
18	01115	1.2.1.1.d.2	4	Utility Trench Details			
19	01115	1.2.1.1.d.3	4	Well Details			
20	01115	1.2.1.1.d.4	4	Valve/Junction Box Details			
21	01115	1.2.1.1.d.5	4	Equipment Layout Plan			
22	01115	1.2.1.1.d.6	4	Process and Instrumentation Diagrams			
23	01115	1.2.1.1.d.7	4	Electrical Site and Power Plan			
24	01115	1.2.1.1.d.8	4	Electrical Panel Schedule and Control Logic			

I hereby certify that the (material) (equipment) (article) shown and marked in this submittal is that proposed to be incorporated with Contract Number N62470-93-D-3033, is in compliance with the Contract drawings and specifications, can be installed in the allocated spaces, and is submitted for Government approval. Government approval of proposed variation, if any, is recommended.

Delivery Order Number: 050

Certified by QC Manager: [signature] **Date:** 4/30/98

Contractor's Comments:

Enclosed is a copy of the calculation briefs utilized in the engineering design of the soil and groundwater treatment system presented in this Work Plan.

Copy of Transmittal to ROICC:

Contractor's Signature: [signature]

Date Received by Reviewer:

From (Reviewer):

To:

☐ Submittals are returned with action indicated, Approval of an item does not include approval of any deviation from the contract requirements unless the contractor calls attention to and supports the deviation.

☐ Submittals are forwarded to LANTDIV with A&E recommendations indicated in REVIEWER USE ONLY Section and in comments below on one of the transmittal form.

Reviewer's Comments:

CC: ROICC, EAD, COTR, CO, A&E, JAJ PMO, JAJ FILE
Boyd (2), Myers (6), Sizemore (2), Ford (Transmittal Only), RC&A (2), Schweikert (1), File (1)

Date:

Signature:

Objective: Evaluate the required PVC and SDR-11 PE pipe diameters for the soil vapor extraction wells and headers.

Methodology: Evaluate the required diameter based upon design flow velocities and vacuum requirements. Pipe diameter selection will be based on the recommended velocity for horizontal lines as presented in the Lamson Corporation Friction Loss Chart.

Results: From the friction loss chart and loss calculation spreadsheets:

Design Section	Equivalent Length (ft)	Design Vacuum (in H_2O)	Design Flow (cfm)	Pipe Diameter (in)	Total Head Loss (in H_2O)
SVE Unit	37		480	5	4.7
Header	629		480	5	30
SVE1 (3 Sections)	482	37	102	3	33.5
SVE2	248	37	111	3	6.8
SVE3	160	37	52	2	7.6

Total Required Flow:	480 cfm
Total Required Vacuum:	120 in H_2O
	9 in Hg

Total Dynamic Head Loss Calculation (Air)

CLIENT SITE NO.:	Polrac - Tank Farm C
JAJ PROJECT NO.:	005-0203-050
DATE DESIGNED:	4/23/98
ENGINEER:	Michael Halil
SPREADSHEET DESIGNED BY:	J. A. Jones Environmental Services, Inc.

(Source: FDEP Compliance Manual, "Getting It Right the First Time")

Calculates the total dynamic head losses through the system for blower sizing.

DESIGN SECTION: Free Product Vapor Extraction Unit (Schedule 40 PVC)

Pipe Diameter	2	in
	0.17	ft
Air friction loss from CFM vs. friction loss table	1.3	in Hg per 100 ft
	0.18	in H_20
Air Flowrate	100.00	cfm
Velocity	76.39	ft/s

Total Friction Head

Equivalent Length of Pipe Calculation:

Linear Run of Pipe (ft)	10	ft

Pipe Fitting Type	Number of Fittings	Equivalent Length of fitting		Total Equivalent Length per fitting type	
Elbows (90 deg)	2.0	5.5	ft	11	ft
Elbows (45 deg)	1.0	2.8	ft	2.8	ft
Ball Valve	1.0	2.0	ft	2	ft
Total Equivalent Length of pipe				25.8	ft

Total friction head for	25.8	ft of pipe with a friction factor of	0.177	in H_20 per linear ft
Total Friction Head			4.56	in H_20

Total Pressure Head

Unit Type	Number of Units	Pressure Losses Through Unit		Pressure head in H_20	
Carbon Drums	0	0.0	in H_20	0.00	in H_20
Moisture Separator	1	0.5	in H_20	0.50	in H_20
Particle Filter	1	1.0	in H_20	1.00	in H_20
Total Pressure Head				1.50	in H_20

Total Dynamic Head = Friction Head + Pressure Head

Total Dynamic Head	6.06	in H_20
	0.45	in Hg
	0.22	psi

Total Dynamic Head Loss Calculation (Air)

DESIGN SECTION: Free Product Vapor Extraction Header (Schedule 40 PVC)

Pipe Diameter	2.5	in
	0.21	ft
Air friction loss from CFM vs. friction loss table	0.54	in Hg per 100 ft
	0.07	in H_20
Air Flowrate	100.00	cfm
Velocity	48.89	ft/s

Total Friction Head

Equivalent Length of Pipe Calculation:

Linear Run of Pipe (ft)	210	ft

Pipe Fitting Type	Number of Fittings	Equivalent Length of fitting		Total Equivalent Length per fitting type	
Elbows (90 deg)	10.0	6.2	ft	62	ft
Elbows (45 deg)	3.0	3.3	ft	9.9	ft
Couplings	10.0	3.0	ft	30	ft
Tee (flow through branch)	4.0	14.3	ft	57.2	ft
Tee (flow through run)	0.0	5.1	ft	0	ft
Total Equivalent Length of pipe				369.1	ft

Total friction head for	369.1	ft of pipe with a friction factor of	0.073	in H_20 per linear ft
Total Friction Head			27.12	in H_20

Total Pressure Head

Unit Type	Number of Units	Pressure Losses Through Unit		Pressure head in H_20	
Carbon Drums	0	0.0	in H_20	0.00	in H_20
Moisture Separator	0	0.0	in H_20	0.00	in H_20
Particle Filter	0	0.0	in H_20	0.00	in H_20
Total Pressure Head				0.00	in H_20

Total Dynamic Head = Friction Head + Pressure Head

Total Dynamic Head	27.12	in H_20
	1.99	in Hg
	0.98	psi

Total Dynamic Head Loss Calculation (Air)

DESIGN SECTION: Free Product Vapor Extraction Well No. 1 (SDR-11 Pipe)

Pipe Diameter	1.5	in
	0.13	ft
Air friction loss from CFM vs. friction loss table	0.21	in Hg per 100 ft
	0.03	in H_20
Air Flowrate	22.00	cfm
Velocity	29.88	ft/s

Total Friction Head

Equivalent Length of Pipe Calculation:

Linear Run of Pipe (ft)	220	ft

Pipe Fitting Type	Number of Fittings	Equivalent Length of fitting		Total Equivalent Length per fitting type	
Elbows (90 deg)	1.0	4.0	ft	4	ft
Elbows (45 deg)	1.0	2.1	ft	2.1	ft
Couplings	11.0	1.5	ft	16.5	ft
Ball Valve	1.0	2.0	ft	2	ft
Total Equivalent Length of pipe				244.6	ft

Total friction head for	244.6	ft of pipe with a friction factor of	0.029	in H_20 per linear ft
Total Friction Head			6.99	in H_20

Total Pressure Head

Unit Type	Number of Units	Pressure Losses Through Unit		Pressure head in H_20	
Carbon Drums	0	0.0	in H_20	0.00	in H_20
Moisture Separator	0	0.0	in H_20	0.00	in H_20
Particle Filter	0	0.0	in H_20	0.00	in H_20
Total Pressure Head				0.00	in H_20

Total Dynamic Head = Friction Head + Pressure Head

Total Dynamic Head	6.99	in H_20
	0.51	in Hg
	0.25	psi

Total Dynamic Head Loss Calculation (Air)

DESIGN SECTION: Free Product Vapor Extraction Well No. 2 (Schedule 40 PVC Well Screen)

Pipe Diameter	1	in
	0.08	ft
Air friction loss from CFM vs. friction loss table	0.07	in Hg per 100 ft
	0.01	in H_20
Air Flowrate	2.80	cfm
Velocity	8.56	ft/s

Total Friction Head

Equivalent Length of Pipe Calculation:

Linear Run of Pipe (ft)	40	ft

Pipe Fitting Type	Number of Fittings	Equivalent Length of fitting		Total Equivalent Length per fitting type	
Elbows (90 deg)	2.0	2.6	ft	5.2	ft
Couplings	2.0	1.0	ft	2	ft
Ball Valve	1.0	2.0	ft	2	ft
Total Equivalent Length of pipe				49.2	ft

Total friction head for	49.2	ft of pipe with a friction factor of	0.010	in H_20 per linear ft
Total Friction Head			0.47	in H_20

Total Pressure Head

Unit Type	Number of Units	Pressure Losses Through Unit		Pressure head in H_20	
Carbon Drums	0	0.0	in H_20	0.00	in H_20
Moisture Separator	0	0.0	in H_20	0.00	in H_20
Particle Filter	0	0.0	in H_20	0.00	in H_20
Total Pressure Head				0.00	in H_20

Total Dynamic Head = Friction Head + Pressure Head

Total Dynamic Head	0.47	in H_20
	0.03	in Hg
	0.02	psi

Total Dynamic Head Loss Calculation (Air)

DESIGN SECTION: Free Product Vapor Extraction Well No. 3 (SDR-11 Pipe)

Pipe Diameter	1.5	in
	0.13	ft
Air friction loss from CFM vs. friction loss table	0.19	in Hg per 100 ft
	0.03	in H_20
Air Flowrate	20.00	cfm
Velocity	27.16	ft/s

Total Friction Head

Equivalent Length of Pipe Calculation:

Linear Run of Pipe (ft)	190	ft

Pipe Fitting Type	Number of Fittings	Equivalent Length of fitting		Total Equivalent Length per fitting type	
Elbows (90 deg)	1.0	4.0	ft	4	ft
Couplings	10.0	1.5	ft	15	ft
Ball Valve	1.0	2.0	ft	2	ft
Total Equivalent Length of pipe				211	ft

Total friction head for	211	ft of pipe with a friction factor of	0.026	in H_20 per linear ft
Total Friction Head			5.46	in H_20

Total Pressure Head

Unit Type	Number of Units	Pressure Losses Through Unit		Pressure head in H_20	
Carbon Drums	0	0.0	in H_20	0.00	in H_20
Moisture Separator	0	0.0	in H_20	0.00	in H_20
Particle Filter	0	0.0	in H_20	0.00	in H_20
Total Pressure Head				0.00	in H_20

Total Dynamic Head = Friction Head + Pressure Head

Total Dynamic Head	5.46	in H_20
	0.40	in Hg
	0.20	psi

Total Dynamic Head Loss Calculation (Air)

DESIGN SECTION: Free Product Vapor Extraction Well No. 4 (SDR-11 Pipe)

Pipe Diameter	1.5	in
	0.13	ft
Air friction loss from CFM vs. friction loss table	0.33	in Hg per 100 ft
	0.04	in H_20
Air Flowrate	26.00	cfm
Velocity	35.31	ft/s

Total Friction Head

Equivalent Length of Pipe Calculation:

Linear Run of Pipe (ft)	240	ft

Pipe Fitting Type	Number of Fittings	Equivalent Length of fitting		Total Equivalent Length per fitting type	
Elbows (90 deg)	1.0	4.0	ft	4	ft
Couplings	12.0	1.5	ft	18	ft
Ball Valve	1.0	2.0	ft	2	ft
Total Equivalent Length of pipe				264	ft

Total friction head for	264	ft of pipe with a friction factor of	0.045	in H_20 per linear ft
Total Friction Head			11.86	in H_20

Total Pressure Head

Unit Type	Number of Units	Pressure Losses Through Unit		Pressure head in H_20	
Carbon Drums	0	0.0	in H_20	0.00	in H_20
Moisture Separator	0	0.0	in H_20	0.00	in H_20
Particle Filter	0	0.0	in H_20	0.00	in H_20
Total Pressure Head				0.00	in H_20

Total Dynamic Head = Friction Head + Pressure Head

Total Dynamic Head	11.86	in H_20
	0.87	in Hg
	0.43	psi

Total Dynamic Head Loss Calculation (Air)

DESIGN SECTION: Free Product Vapor Extraction Well No. 5 (SDR-11 Pipe)

Pipe Diameter	1.5	in
	0.13	ft
Air friction loss from CFM vs. friction loss table	0.33	in Hg per 100 ft
	0.04	in H_20
Air Flowrate	26.00	cfm
Velocity	35.31	ft/s

Total Friction Head

Equivalent Length of Pipe Calculation:

Linear Run of Pipe (ft)	240	ft

Pipe Fitting Type	Number of Fittings	Equivalent Length of fitting		Total Equivalent Length per fitting type	
Elbows (90 deg)	1.0	4.0	ft	4	ft
Couplings	12.0	1.5	ft	18	ft
Ball Valve	1.0	2.0	ft	2	ft
Total Equivalent Length of pipe				264	ft

Total friction head for	264	ft of pipe with a friction factor of	0.045	in H_20 per linear ft
Total Friction Head			11.86	in H_20

Total Pressure Head

Unit Type	Number of Units	Pressure Losses Through Unit		Pressure head in H_20	
Carbon Drums	0	0.0	in H_20	0.00	in H_20
Moisture Separator	0	0.0	in H_20	0.00	in H_20
Particle Filter	0	0.0	in H_20	0.00	in H_20
Total Pressure Head				0.00	in H_20

Total Dynamic Head = Friction Head + Pressure Head

Total Dynamic Head	11.86	in H_20
	0.87	in Hg
	0.43	psi

Total Dynamic Head Loss	69.81	in H_20
Vacuum Required at each Well	10.00	in H_20
Total Vacuum Required	79.81	in H_20
	5.86	in Hg
Total Flow Required	100.00	cfm

FREE PRODUCT VAPOR EXTRACTION HEADER AND WELLS

PRODUCT DATA

LAMSON
CORPORATION
SYRACUSE, N.Y. 13221

Allied Product Department

BLOWERS/ EXHAUSTER

FRICTION LOSS CHART — VACUUM APPLICATIONS

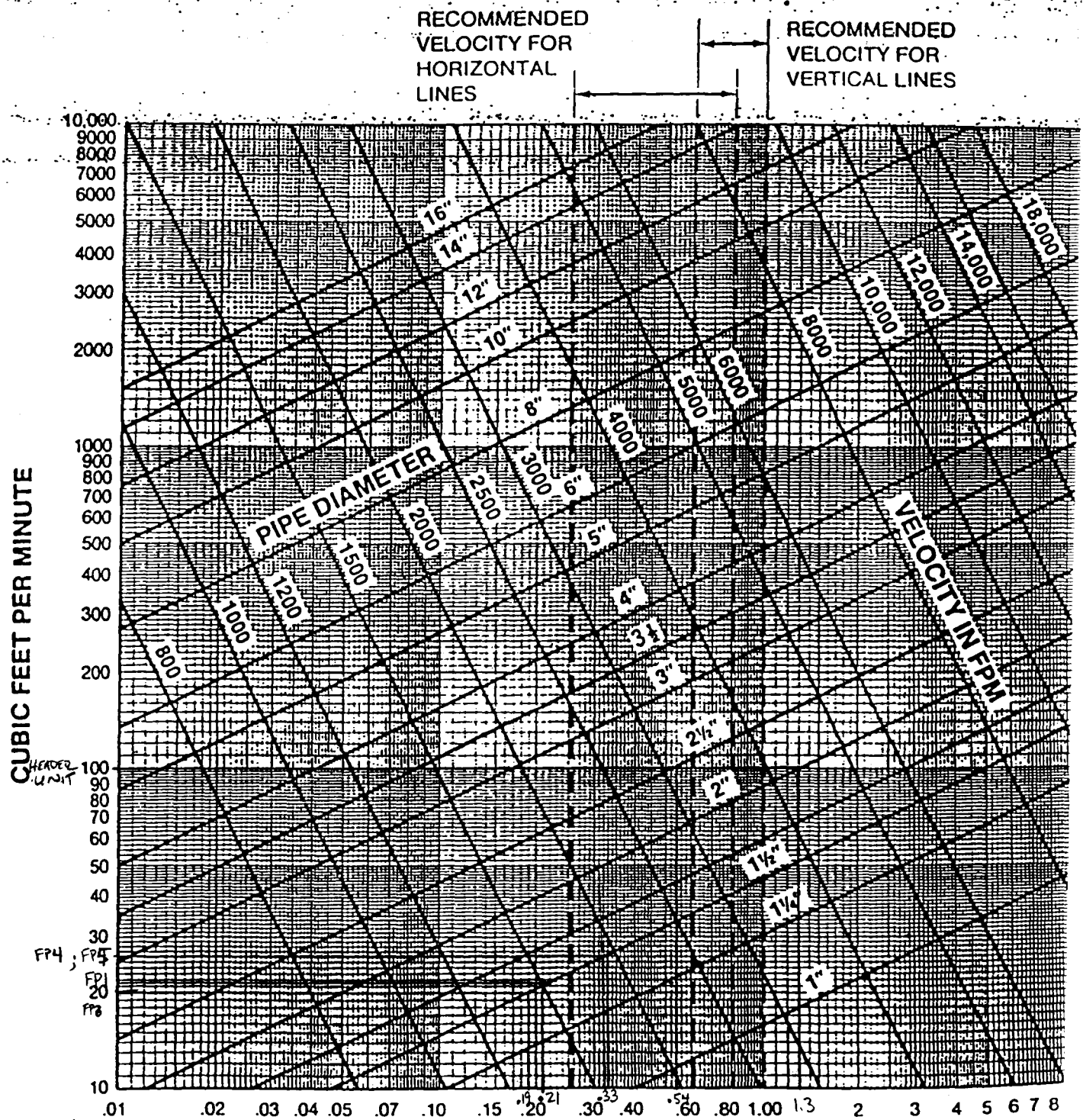

FP2 210 cfm
Estimated @ .07 in Hg/100 ft

NOTES: 1. Values are based upon air flow through seamless steel tubing (air density 0.075 pounds per cubic f
2. Friction Loss is Directly Proportional to Air Density.

Total Dynamic Head Loss Calculation (Air)

CLIENT SITE NO.:	Polrac - Tank Farm C
JAJ PROJECT NO.:	005-0203-050
DATE DESIGNED:	4/23/98
ENGINEER:	Michael Halil
SPREADSHEET DESIGNED BY:	J. A. Jones Environmental Services, Inc.

(Source: FDEP Compliance Manual, "Getting It Right the First Time")

Calculates the total dynamic head losses through the system for blower sizing.

DESIGN SECTION: Soil Vapor Extraction Unit (Schedule 40 PVC)

Pipe Diameter	5	in
	0.42	ft
Air friction loss from CFM vs. friction loss table	0.35	in Hg per 100 ft
	0.05	in H_20
Air Flowrate	480.00	cfm
Velocity	58.67	ft/s

Total Friction Head

Equivalent Length of Pipe Calculation:

Linear Run of Pipe (ft)	10	ft

Pipe Fitting Type	Number of Fittings	Equivalent Length of fitting		Total Equivalent Length per fitting type	
Elbows (90 deg)	2.0	8.9	ft	17.8	ft
Elbows (45 deg)	1.0	6.8	ft	6.8	ft
Ball Valve	1.0	2.0	ft	2	ft
Total Equivalent Length of pipe				36.6	ft

Total friction head for	36.6	ft of pipe with a friction factor of	0.048	in H_20 per linear ft
Total Friction Head			1.74	in H_20

Total Pressure Head

Unit Type	Number of Units	Pressure Losses Through Unit		Pressure head in H_20	
Carbon Drums	0	0.0	in H_20	0.00	in H_20
Moisture Separator	1	2.0	in H_20	2.00	in H_20
Particle Filter	1	1.0	in H_20	1.00	in H_20
Total Pressure Head				3.00	in H_20

Total Dynamic Head = Friction Head + Pressure Head

Total Dynamic Head	4.74	in H_20
	0.35	in Hg
	0.17	psi

Total Dynamic Head Loss Calculation (Air)

DESIGN SECTION: Soil Vapor Extraction Header (Schedule 40 PVC)

Pipe Diameter	5	in
	0.42	ft
Air friction loss from CFM vs. friction loss table	0.35	in Hg per 100 ft
	0.05	in H_20
Air Flowrate	480.00	cfm
Velocity	58.67	ft/s

Total Friction Head

Equivalent Length of Pipe Calculation:

Linear Run of Pipe (ft)	370	ft

Pipe Fitting Type	Number of Fittings	Equivalent Length of fitting		Total Equivalent Length per fitting type	
Elbows (90 deg)	6.0	8.9	ft	53.4	ft
Elbows (45 deg)	0.0	6.8	ft	0	ft
Couplings	19.0	5.1	ft	97.38	ft
Tee (flow through branch)	4.0	27.2	ft	108.6	ft
Tee (flow through run)	0.0	10.4	ft	0	ft
Total Equivalent Length of pipe				629.375	ft

Total friction head for	629.375	ft of pipe with a friction factor of	0.048	in H_20 per linear ft
Total Friction Head			29.98	in H_20

Total Pressure Head

Unit Type	Number of Units	Pressure Losses Through Unit		Pressure head in H_20	
Carbon Drums	0	0.0	in H_20	0.00	in H_20
Moisture Separator	0	0.0	in H_20	0.00	in H_20
Particle Filter	0	0.0	in H_20	0.00	in H_20
Total Pressure Head				0.00	in H_20

Total Dynamic Head = Friction Head + Pressure Head

Total Dynamic Head	29.98	in H_20
	2.20	in Hg
	1.08	psi

Total Dynamic Head Loss Calculation (Air)

DESIGN SECTION: Soil Vapor Extraction Well No. 1 - Each of Three Screened Sections (SDR-11 Pipe)

Pipe Diameter	3	in
	0.25	ft
Air friction loss from CFM vs. friction loss table	0.17	in Hg per 100 ft
	0.02	in H_20
Air Flowrate	102.00	cfm
Velocity	34.63	ft/s

Total Friction Head

Equivalent Length of Pipe Calculation:

Linear Run of Pipe (ft)	470	ft

Pipe Fitting Type	Number of Fittings	Equivalent Length of fitting		Total Equivalent Length per fitting type	
Elbows (90 deg)	1.0	7.7	ft	7.7	ft
Couplings	1.0	3.0	ft	3	ft
Ball Valve	1.0	2.0	ft	2	ft
Total Equivalent Length of pipe				482.7	ft

Total friction head for	482.7	ft of pipe with a friction factor of	0.023	in H_20 per linear ft
Total Friction Head			11.17	in H_20
		For all Three Sections	33.50	in H_20

Total Pressure Head

Unit Type	Number of Units	Pressure Losses Through Unit		Pressure head in H_20	
Carbon Drums	0	0.0	in H_20	0.00	in H_20
Moisture Separator	0	0.0	in H_20	0.00	in H_20
Particle Filter	0	0.0	in H_20	0.00	in H_20
Total Pressure Head				0.00	in H_20

Total Dynamic Head = Friction Head + Pressure Head

Total Dynamic Head	33.50	in H_20
	2.46	in Hg
	1.21	psi

Total Dynamic Head Loss Calculation (Air)

DESIGN SECTION: Soil Vapor Extraction Well No. 2 (SDR-11 Pipe)

Pipe Diameter	3	in
	0.25	ft
Air friction loss from CFM vs. friction loss table	0.2	in Hg per 100 ft
	0.03	in H_20
Air Flowrate	111.00	cfm
Velocity	37.69	ft/s

Total Friction Head

Equivalent Length of Pipe Calculation:

Linear Run of Pipe (ft)	220	ft

Pipe Fitting Type	Number of Fittings	Equivalent Length of fitting		Total Equivalent Length per fitting type	
Elbows (90 deg)	3.0	7.7	ft	23.1	ft
Couplings	1.0	3.0	ft	3	ft
Ball Valve	1.0	2.0	ft	2	ft
Total Equivalent Length of pipe				248.1	ft

Total friction head for	248.1	ft of pipe with a friction factor of	0.027	in H_20 per linear ft
Total Friction Head			6.75	in H_20

Total Pressure Head

Unit Type	Number of Units	Pressure Losses Through Unit		Pressure head in H_20	
Carbon Drums	0	0.0	in H_20	0.00	in H_20
Moisture Separator	0	0.0	in H_20	0.00	in H_20
Particle Filter	0	0.0	in H_20	0.00	in H_20
Total Pressure Head				0.00	in H_20

Total Dynamic Head = Friction Head + Pressure Head

Total Dynamic Head	6.75	in H_20
	0.50	in Hg
	0.24	psi

Total Dynamic Head Loss Calculation (Air)

DESIGN SECTION: Soil Vapor Extraction Well No. 3 (SDR-11 Pipe)

Pipe Diameter	2	in
	0.17	ft
Air friction loss from CFM vs. friction loss table	0.35	in Hg per 100 ft
	0.05	in H_20
Air Flowrate	52.00	cfm
Velocity	39.73	ft/s

Total Friction Head

Equivalent Length of Pipe Calculation:

Linear Run of Pipe (ft)	140	ft

Pipe Fitting Type	Number of Fittings	Equivalent Length of fitting		Total Equivalent Length per fitting type	
Elbows (90 deg)	3.0	5.5	ft	16.5	ft
Couplings	1.0	2.0	ft	2	ft
Ball Valve	1.0	2.0	ft	2	ft
Total Equivalent Length of pipe				160.5	ft

Total friction head for	160.5	ft of pipe with a friction factor of	0.048	in H_20 per linear ft
Total Friction Head			7.64	in H_20

Total Pressure Head

Unit Type	Number of Units	Pressure Losses Through Unit		Pressure head in H_20	
Carbon Drums	0	0.0	in H_20	0.00	in H_20
Moisture Separator	0	0.0	in H_20	0.00	in H_20
Particle Filter	0	0.0	in H_20	0.00	in H_20
Total Pressure Head				0.00	in H_20

Total Dynamic Head = Friction Head + Pressure Head

Total Dynamic Head	7.64	in H_20
	0.56	in Hg
	0.28	psi
Total Dynamic Head Loss	82.62	in H_20
Vacuum Required at each Well	37.00	in H_20
Total Vacuum Required	119.62	in H_20
	8.79	in Hg
Total Flow Required	480.00	cfm

SVE HEADER AND WELLS

PRODUCT DATA

LAMSON
CORPORATION
SYRACUSE, N.Y. 13221

Allied Product Department

BLOWERS/ EXHAUSTERS

FRICTION LOSS CHART — VACUUM APPLICATIONS

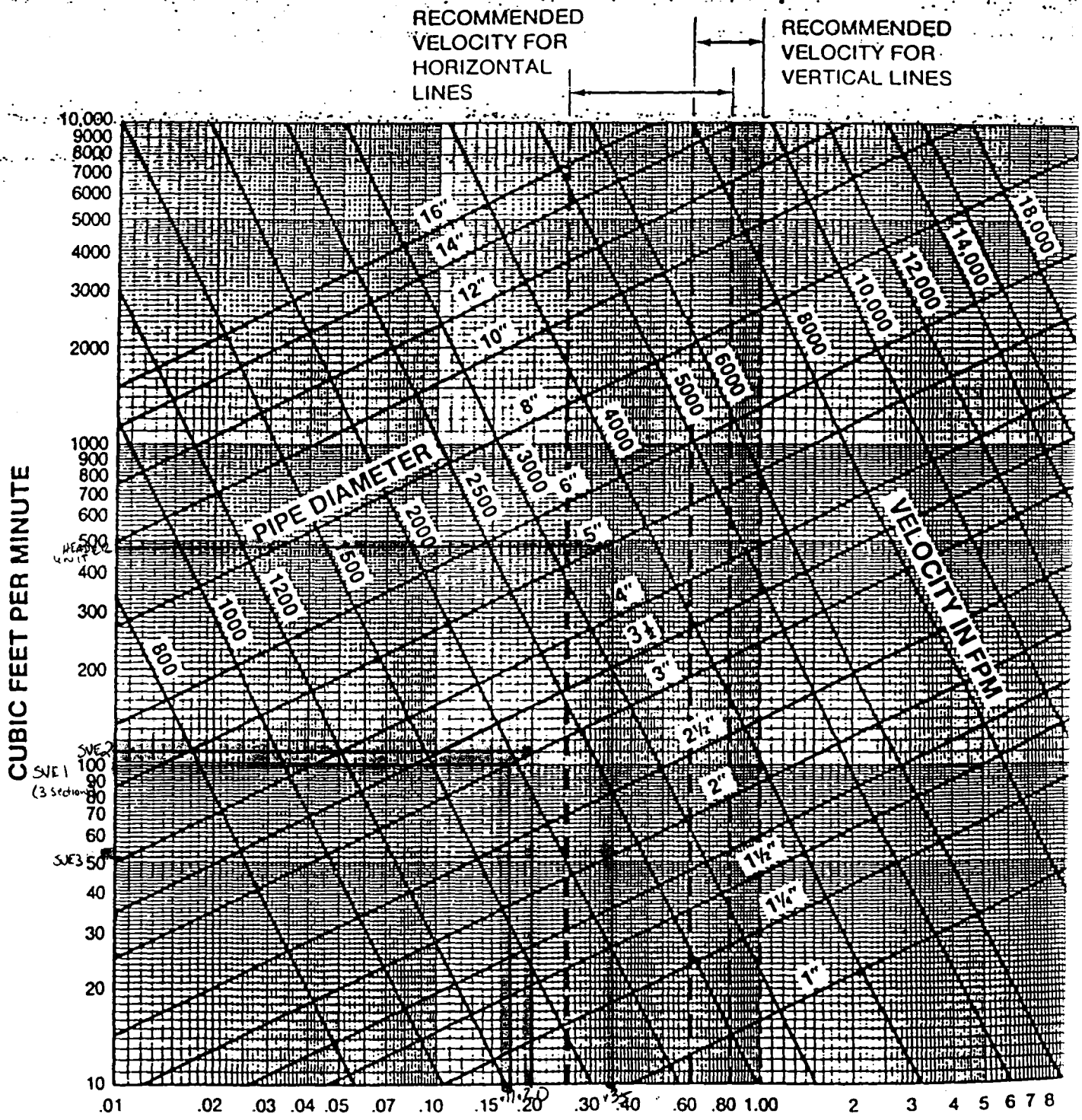

NOTES: 1. Values are based upon air flow through seamless steel tubing (air density 0.075 pounds per cubic f
2. Friction Loss is Directly Proportional to Air Density.

EQUIVALENT LENGTH CALCULATION

CLIENT SITE NO.:	Polrac - Tank Farm C
JAJ PROJECT NO.:	005-0203-050
DATE DESIGNED:	4/23/98
ENGINEER:	Michael Halil
SPREAD SHEET DESIGNED BY:	J. A. Jones Environmental Services, Inc.

(Source: FDEP Compliance Manual, "Getting It Right the First Time")

Calculates the equivalent length of pipe for air sparge/biosparge line sizing.

DESIGN SECTION: Header from Air Sparge/Biosparge Wells No. 1 Header and No. 2 Header Junction.

Pipe Diameter	3	in
	0.25	ft
Air Flowrate	150.00	CFM
Velocity	50.93	ft/s

Equivalent Length of Pipe Calculation:

Linear Run of Pipe (ft)	240	ft

Pipe Fitting Type	Number of Fittings	Equivalent Length of fitting	Total Equivalent Length per fitting type	
Elbows (90 deg)	3.0	14.8	44.25	ft
Elbows (45 deg)	1.0	7.5	7.50	ft
Sockets	15.0	3.6	54.00	ft
Ball Valve	1.0	3.0	3.00	ft
Tee	1.0	24.6	24.60	ft
Reducer	2.0	6.8	13.67	ft
Total Equivalent Length of pipe			387.02	ft

EQUIVALENT LENGTH CALCULATION

DESIGN SECTION: Header from Air Sparge/Biosparge Wells No. 1 to Header Junction.

Pipe Diameter	2	in
	0.17	ft
Air Flowrate	95.00	CFM
Velocity	72.57	ft/s

Equivalent Length of Pipe Calculation:

Linear Run of Pipe (ft)	320	ft

Pipe Fitting Type	Number of Fittings	Equivalent Length of fitting	Total Equivalent Length per fitting type	
Elbows (90 deg)	1.0	7.5	7.50	ft
Elbows (45 deg)	0.0	4.0	0.00	ft
Sockets	20.0	2.0	40.00	ft
Ball Valve	0.0	3.0	0.00	ft
Tee	1.0	12.4	12.40	ft
Reducer	2.0	3.0	6.00	ft
Total Equivalent Length of pipe			385.90	ft

EQUIVALENT LENGTH CALCULATION

DESIGN SECTION: Header from Air Sparge/Biosparge Wells No. 2 to Header Junction.

Pipe Diameter	2	in
	0.17	ft
Air Flowrate	55.00	CFM
Velocity	42.02	ft/s

Equivalent Length of Pipe Calculation:

Linear Run of Pipe (ft)	270	ft

Pipe Fitting Type	Number of Fittings	Equivalent Length of fitting	Total Equivalent Length per fitting type	
Elbows (90 deg)	1.0	7.5	7.50	ft
Elbows (45 deg)	3.0	4.0	12.00	ft
Sockets	17.0	2.0	34.00	ft
Ball Valve	0.0	3.0	0.00	ft
Tee	1.0	12.4	12.40	ft
Reducer	2.0	3.0	6.00	ft
Total Equivalent Length of pipe			341.90	ft

EQUIVALENT LENGTH CALCULATION

DESIGN SECTION: Each of Three Sections for Air Sparge Well No. 1

Pipe Diameter	1.5	in
	0.13	ft
Air Flowrate	23.00	CFM
Velocity	31.24	ft/s

Equivalent Length of Pipe Calculation:

Linear Run of Pipe (ft)	620	ft

Pipe Fitting Type	Number of Fittings	Equivalent Length of fitting	Total Equivalent Length per fitting type	
Elbows (90 deg)	2.0	5.9	11.84	ft
Elbows (45 deg)	0.0	3.0	0.00	ft
Sockets	38.0	1.7	63.46	ft
Ball Valve	1.0	3.0	3.00	ft
Tee	1.0	9.2	9.20	ft
Reducer	0.0	2.3	0.00	ft
Total Equivalent Length of pipe			707.50	ft

EQUIVALENT LENGTH CALCULATION

DESIGN SECTION: Each of Two Sections for Air Sparge Well No. 2

Pipe Diameter	1.5	in
	0.13	ft
Air Flowrate	19.50	CFM
Velocity	26.48	ft/s

Equivalent Length of Pipe Calculation:

Linear Run of Pipe (ft)	480	ft

Pipe Fitting Type	Number of Fittings	Equivalent Length of fitting	Total Equivalent Length per fitting type	
Elbows (90 deg)	2.0	5.9	11.84	ft
Elbows (45 deg)	0.0	3.0	0.00	ft
Sockets	30.0	1.7	50.10	ft
Ball Valve	1.0	3.0	3.00	ft
Tee	1.0	9.2	9.20	ft
Reducer	0.0	2.3	0.00	ft
Total Equivalent Length of pipe			554.14	ft

EQUIVALENT LENGTH CALCULATION

DESIGN SECTION: Each of Three Sections for Biosparge Well No. 1

Pipe Diameter	1	in
	0.08	ft
Air Flowrate	8.50	CFM
Velocity	25.97	ft/s

Equivalent Length of Pipe Calculation:

Linear Run of Pipe (ft)	790	ft

Pipe Fitting Type	Number of Fittings	Equivalent Length of fitting	Total Equivalent Length per fitting type	
Elbows (90 deg)	2.0	3.3	6.66	ft
Elbows (45 deg)	0.0	1.3	0.00	ft
Sockets	49.0	0.9	45.08	ft
Ball Valve	1.0	3.0	3.00	ft
Tee	2.0	6.3	12.50	ft
Reducer	0.0	1.7	0.00	ft
Total Equivalent Length of pipe			857.24	ft

EQUIVALENT LENGTH CALCULATION

DESIGN SECTION: Each of Two Sections for Biosparge Well No. 2

Pipe Diameter	1	in
	0.08	ft
Air Flowrate	7.20	CFM
Velocity	22.00	ft/s

Equivalent Length of Pipe Calculation:

Linear Run of Pipe (ft)	640	ft

Pipe Fitting Type	Number of Fittings	Equivalent Length of fitting	Total Equivalent Length per fitting type	
Elbows (90 deg)	2.0	3.3	6.66	ft
Elbows (45 deg)	0.0	1.3	0.00	ft
Sockets	40.0	0.9	36.80	ft
Ball Valve	1.0	3.0	3.00	ft
Tee	1.0	6.3	6.25	ft
Reducer	0.0	1.7	0.00	ft
Total Equivalent Length of pipe			692.71	ft

Main Header Pressure Loss	0.4	psi
Header No. 1 Pressure Loss	1.0	psi
Header No. 2 Pressure Loss	0.4	psi
Air Sparge Well No. 1 Pressure Loss	1.8	psi
Air Sparge Well No. 2 Pressure Loss	2.0	psi
Biosparge Well No. 1 Pressure Loss	3.0	psi
Biosparge Well No. 2 Pressure Loss	1.0	psi
Maximum Pressure Required at Wells	17.0	psi
Total Pressure Required	26.6	psi
Total Flow Required	150	cfm

DRAFT WORK PLAN
Delivery Order No. 050

RAC Action for Statement of Work Design
Tank Farm C
Marine Corps Air Station
Cherry Point, North Carolina

Prepared for

The Atlantic Division, Naval Facilities Engineering Command

April 1998

Prepared by

J.A. Jones Environmental Services Company
8936 Western Way, Suite 10
Jacksonville, Florida 32256
J.A. Jones No. 005.050

ACRONYM LIST (Continued)

ppm	parts per million
PQCM	Program Quality Control Manager
psi	pounds per square inch
PVC	polyvinyl chloride
QA	Quality Assurance
QC	Quality Control
RC&A	Richard Catlin and Associates, Inc.
RCRA	Resource Conservation and Recovery Act
ROICC	Resident Officer in Charge of Construction
ROPS	Rollover Project Structures
SHSO	Site Health and Safety Officer
SHSP	Site Health and Safety Plan
SQA	Site Quality Administer
SVE	soil vapor extraction
SZ	Support Zone
TPH	total petroleum hydrocarbons
µg/l	micrograms per liter
USDOT	United States Department of Transportation
USEPA	United States Environmental Protection Agency
USN	United States Navy
USTs	underground storage tanks
VOAs	volatile organic aromatics
VOCs	volatile organic compounds

TABLE OF CONTENTS

ACRONYM LIST i

TABLE OF CONTENTS iii

LIST OF TABLES viii

LIST OF FIGURES ix

LIST OF APPENDICES xi

SECTION 1.0 INTRODUCTION **1-1**

1.1 SITE HISTORY AND PROJECT OBJECTIVES 1-2
1.2 SCOPE OF WORK 1-4
1.2.1 Setup/Construction of Temporary Facilities And Site Controls 1-4
1.2.2 Biosparge Well Installation 1-5
1.2.3 Air Sparge Well Installation 1-6
1.2.4 Soil Vapor Extraction System Installation 1-7
1.2.5 Free Product Vapor Extraction System Installation 1-7
1.2.6 Trenching and Piping System Installation 1-8
1.2.7 Treatment System Installation 1-10
1.2.8 System Testing 1-10
1.2.9 Site Restoration 1-10
1.2.10 Demobilization 1-11
1.2.11 Operation And Maintenance 1-11
1.3 PROJECT SCHEDULE 1-11
1.4 REPORTING 1-12
1.5 GOVERNMENT FURNISHED PROPERTY 1-13

SECTION 2.0 SAMPLING AND ANALYSIS PLAN **2-1**

2.1 CHEMICAL SAMPLING AND ANALYTICAL TESTING 2-1
2.1.1 Purpose and Scope 2-1
2.1.1.1 Sampling Strategy 2-1
2.1.1.2 Sampling Methodologies 2-2
2.1.1.2.1 Samples for Waste Characterization 2-3
2.1.1.2.2 Air Monitoring Measurements 2-6
2.1.1.3 Sample Handling 2-7
2.1.1.4 Analytical Methods 2-8

	2.1.2 Field Sampling and Quality Control	2-8
	2.1.2.1 Sample Labels	2-9
	2.1.2.2 Sample Custody and Handling	2-9
	2.1.2.3 Field Documentation	2-10
	2.1.3 Laboratory QA/QC	2-11
	2.1.3.1 Laboratory Management of Samples	2-11
	2.1.3.2 Sample Disposal	2-11
	2.1.3.3 Equipment Decontamination	2-12
	2.1.4 References and Miscellaneous Procedures	2-12
2.2	CONSTRUCTION MATERIALS SAMPLING AND TESTING	2-12
	2.2.1 Concrete	2-12
	2.2.2 Backfill and Fill Material Testing	2-13
SECTION 3.0	**WASTE STREAM MANAGEMENT PLAN**	**3-1**
3.1	WASTE STREAMS	3-1
3.2	WASTE CHARACTERIZATION	3-2
3.3	DISPOSAL OF WASTE STREAMS	3-2
3.4	HANDLING AND TRANSPORTATION OF WASTE STREAMS	3-3
	3.4.1 Temporary Storage	3-3
	3.4.2 Transportation of Waste Streams	3-5
3.5	DOCUMENTATION OF WASTE STREAMS	3-6
SECTION 4.0	**ENVIRONMENTAL PROTECTION PLAN**	**4-1**
4.1	INTRODUCTION	4-1
4.2	EROSION AND SEDIMENT CONTROL	4-1
4.3	EXCESS SOIL TREATMENT AND DISPOSAL	4-2
4.4	CONSTRUCTION DEBRIS	4-2
4.5	AIR POLLUTION CONTROL	4-2
4.6	DUST CONTROL	4-2
4.7	SPILL CONTAINMENT	4-2
4.8	ENVIRONMENTAL CONDITIONS REPORT	4-3
4.9	HAZARDOUS MATERIALS	4-3

TABLE OF CONTENTS (continued)

SECTION 5.0 SITE HEALTH AND SAFETY PLAN 5-1

5.1 INTRODUCTION 5-1
5.1.1 Health and Safety Program Maintenance 5-2
5.1.2 Plan Acceptance 5-2
5.1.3 References 5-2
5.1.4 Site History and Description 5-2
5.2 SITE HEALTH AND SAFETY PERSONNEL 5-3
5.2.1 Certified Industrial Hygienist 5-3
5.2.2 Site Health and Safety Officer 5-3
5.2.3 Site Labor Forces 5-4
5.3 TRAINING REQUIREMENTS 5-4
5.3.1 OSHA 1910.120 Training 5-4
5.3.2 Site-Specific Training 5-4
5.3.3 Daily Safety Meeting 5-4
5.3.4 Emergency First Aid Training 5-5
5.3.5 Spill Response Training 5-5
5.4 MEDICAL SURVEILLANCE PROGRAM 5-6
5.4.1 Personnel Screening 5-6
5.4.2 Site Medical Surveillance 5-6
5.5 WORK ACTIVITIES 5-7
5.6 POTENTIAL HEALTH HAZARDS 5-7
5.6.1 Mobilization/Construct Temporary Facilities 5-8
5.6.2 Surface Water Control 5-8
5.6.3 Horizontal Well Installation 5-8
5.6.4 Hand Excavation Near Utilities 5-9
5.6.5 Machine Excavation and Backfilling 5-9
5.6.6 Treatment System Installation 5-9
5.6.7 Pipe Trenching 5-9
5.6.8 Treatment System Connections 5-10
5.6.9 Soil/Water Sampling 5-10
5.6.10 Operation and Maintenance 5-10
5.6.11 Site Restoration and Demobilization 5-11
5.7 POTENTIAL SAFETY HAZARDS 5-11
5.7.1 Mobilization/Construct Temporary Facilities 5-12
5.7.2 Surface Water Control 5-13
5.7.3 Horizontal Well Installation 5-13
5.7.4 Hand Excavation Near Utilities 5-13
5.7.5 Machine Excavation and Backfilling 5-14
5.7.6 Treatment System Installation 5-14

	5.7.7 Pipe Trenching	5-14
	5.7.8 Treatment System Connections	5-15
	5.7.9 Soil/Water Sampling	5-15
	5.7.10 Operation and Maintenance	5-15
	5.7.11 Site Restoration and Demobilization	5-15
5.8	PERSONNEL PROTECTION	5-16
	5.8.1 Health Hazard Protection	5-16
	5.8.1.1 Personal Protection Equipment	5-17
	5.8.1.2 Frequency and Types of Air Monitoring	5-18
	5.8.2 Potential Safety Hazard Protection	5-19
	5.8.3 Hazard Communication Program	5-20
	5.8.4 Hearing Conservation Plan	5-20
5.9	WORK ZONE AND SITE CONTROL	5-20
5.10	DECONTAMINATION	5-21
	5.10.1 Personnel Decontamination	5-22
	5.10.2 Equipment Decontamination	5-23
	5.10.3 Wastewater Disposal	5-24
5.11	CONTINGENCY PLAN	5-24
	5.11.1 General Response Conditions	5-24
	5.11.1.1 First Aid	5-24
	5.11.1.2 Accident Report and Response Procedure	5-24
	5.11.1.3 Response Requirements	5-25
	5.11.2 Responsibilities	5-25
	5.11.3 Public Response Agencies	5-25
	5.11.4 Emergency Response Equipment	5-25
	5.11.5 Accidents and Non-Routine Events	5-26
	5.11.5.1 Workers Injury	5-26
	5.11.5.2 Heat/Cold Stress	5-27
	5.11.5.3 Fires	5-29
	5.11.5.4 Inclement Weather Conditions	5-30
	5.11.5.5 Refuges for an Emergency Situation	5-32
SECTION 6.0	**QUALITY CONTROL PLAN**	**6-1**
6.1	SITE QUALITY ADMINISTRATOR	6-1
6.2	INVOICE QUALITY ADMINISTRATOR	6-1
6.3	SUBMITTAL QUALITY ADMINISTRATOR	6-2
6.4	SUBMITTAL REGISTER	6-2
6.5	PROJECT ORGANIZATION	6-2
6.6	DEFINABLE FEATURES OF WORK	6-2

6.7 QUALITY CONTROL INSPECTIONS 6-2
6.7.1 Concrete Foundation Placement 6-3
6.7.2 Soil and Groundwater Treatment System Installation and Utility Connection 6-4
6.7.3 Pipe Trench Excavation 6-5
6.7.4 Horizontal Well Installation Activities 6-5
6.7.5 Waste Characterization Sampling 6-6
6.7.6 Transportation and Treatment of Petroleum-Impacted Soil and Groundwater 6-6
6.7.7 System Start-Up and Operation and Maintenance 6-7
6.8 LABORATORY ANALYSIS 6-8
6.9 CLOSEOUT REPORT 6-8

SECTION 7.0 TECHNICAL SPECIFICATIONS 7-1

7.1 TECHNICAL SPECIFICATION MODIFICATIONS 7-1
7.1.1 Automatic Drain 7-1
7.1.2 Air Compressor 7-2
7.1.3 Treatment System Enclosure 7-2
7.1.4 Submittal Register 7-2
7.2 TECHNICAL SPECIFICATION ADDITIONS 7-2
7.2.1 Horizontal Well Development Water Analytical Requirements 7-2
7.2.2 Fill Material Testing and Analyses 7-3

SECTION 8.0 CONTRACTOR GENERATED CONSTRUCTION DRAWINGS 8-1

LIST OF TABLES

Table No.	Description
2-1	Summary of Field Sampling Analysis
2-2	QC Sample Frequency
3-1	Summary of Waste Streams
3-2	Summary of Waste Stream Documentation
6-1	Submittal Register
6-2	Testing and Analysis Quality Control Log

LIST OF FIGURES

Figure No.	Description
C-1	Title Sheet with Site Location Map
C-2	General Notes and Legends
C-3	Site Environmental Conditions–Vadose Soil Contamination/Free Product Plume
C-4	Site Environmental Conditions–Dissolved Phase Contaminant Plume/Water Table Contours
C-5	Free Product Vapor Extraction System and Soil Vapor Extraction System Layout
C-6	Free Product Vapor Extraction System and Soil Vapor Extraction System Layout
C-7	Air Sparge/Biosparge System Layout
C-8	Air Sparge/Biosparge System Layout
C-9	Free Product Vapor Extraction System and Soil Vapor Extraction System Piping and Instrumentation Diagrams
C-10	Air Sparge/Biosparge System Piping and Instrumentation Diagram
C-11	Treatment System Piping and Electrical Plan
C-12	Horizontal Well and Boring Details
C-13	Free Product Vapor Extraction Well Details, Pipe Trench Details, and Bore and Jack Details
C-14	Soil Vapor Extraction, Free Product Vapor Extraction, Air Sparge, and Biosparge Well Valve Box Details
C-15	Miscellaneous Details
E-1	Power Supply Connection and Control Panel Details
E-2	Electrical Line Diagram and System Control Logic
E-3	Electrical Line Diagram and System Control Logic
2-1	Equipment Decontamination Procedure
2-2	Daily Report
3-1	Transportation and Disposal Log
5-1	Health and Safety Plan Acceptance Form
5-2	Sign-In-Log
5-3	Safety Pre-Planning Checklist
5-4	Medical Authorization/Data Sheet
5-5	Lost Time Injury Report
5-6	Accident Investigation Written Statement
5-7	Contractor Significant Incident Report
5-8	Accident Investigation Photo Log

LIST OF FIGURES (continued)

Figure No.	Description
5-9	Levels of Protection Required for Various Activities
5-10	Air Monitoring Log
5-11	Permissible Noise Exposures
5-12	Emergency Telephone Numbers
5-13	Hospital Location Map
5-14	MCAS EAD Spill Report
6-1	Contractor Production Report
6-2	Contractor Quality Control Report
6-3	Contractor Deficiency Report
6-4	Rework Items List
6-5	Project Organizational Chart

LIST OF APPENDICES

APPENDIX A	CONSTRUCTION SCHEDULE
APPENDIX B	EROSION AND SEDIMENT CONTROL PLAN
APPENDIX C	TRANSPORTATION AND DISPOSAL PLAN
APPENDIX D	TASK-SPECIFIC HAZARD ANALYSIS AND CHEMICAL AND PHYSICAL PROPERTIES OF KNOWN SITE CONTAMINANTS
APPENDIX E	MACHINERY AND MECHANIZED EQUIPMENT

SECTION 1.0

INTRODUCTION

The purpose of this Work Plan is to describe the effort necessary to construct and implement the soil and groundwater treatment system at Tank Farm C located on the Marine Corps Air Station (MCAS), Cherry Point, North Carolina. J.A. Jones Environmental Services Company (J.A. Jones) has been retained by the Department of the Navy Atlantic Division, Naval Facilities Engineering Command (NAVFACENGCOM), to prepare this Work Plan as part of the installation and operation and maintenance (O&M) of the soil and groundwater treatment system outlined in Specification 01115 General Paragraphs of this Delivery Order's Technical Specifications prepared by Richard Catlin and Associates, Inc. (RC&A).

The work scope includes the construction of a soil and groundwater treatment system consisting of five horizontal free product vapor extraction (FPVE) wells, three horizontal soil vapor extraction (SVE) wells, two horizontal air sparge wells, two horizontal biosparge wells, system start-up, and operation and maintenance activities. Petroleum-impacted soil encountered during well installation and trenching activities will be hauled to a treatment or recycling facility permitted to accept petroleum-impacted material.

This Work Plan is organized into eight sections of text and five appendices. The Work Plan addresses each of the tasks contained in Paragraph 1.2.1.1, Section 01115 General Paragraphs of the Technical Specifications. A brief description of each section is presented as follows.

Section 1.0 Introduction of this Work Plan contains a brief description of the project objectives and construction scheduling as well as a summary of well installation, trench construction, soil sampling activities, vadose zone testing, treatment system construction, and site restoration activities.

Section 2.0 Sampling and Analysis Plan contains all sampling and analysis requirements necessary to characterize petroleum-impacted soil and groundwater, and to evaluate treatment system performance.

Section 3.0 Waste Stream Management Plan discusses the characterization, disposal, handling, and transportation of wastes encountered or generated during completion of the work.

Section 4.0 Environmental Protection Plan addresses the Environmental Protection Plan in accordance with the requirements of Section 4.0, Part 4 of the Basic Contract.

Section 5.0 Site Health and Safety Plan (SHSP) addresses site-specific health and safety issues for the project construction activities.

Section 6.0 Quality Control Plan details the site-specific Quality Control (QC) procedures and contains a completed Submittal Register to document quality control for materials, inspections, and testing in accordance with Section C, Part 7.3 of the Basic Contract.

Section 7.0 Technical Specifications of this Plan contains amended technical specifications which apply to the Work Plan and satisfy the requirements of the Delivery Order.

Section 8.0 Contractor Generated Construction Drawings contains design drawings that detail project features including the soil and groundwater treatment system layout; associated details; and piping and instrumentation diagrams.

The following support documents are presented as Appendices to the Work Plan.

- **Appendix A Construction Schedule**
- **Appendix B Erosion and Sediment Control Plan**
- **Appendix C Transportation and Disposal Plan**
- **Appendix D Task-Specific Hazard Analysis And Chemical and Physical Properties of Known Site Contaminants**
- **Appendix E Machinery and Mechanized Equipment**

The following documents prepared by RC&A were utilized by J.A. Jones in its preparation of this Work Plan and the contractor construction drawings.

- Leaking Underground Storage Tank Corrective Action Plan, dated December 12, 1995
- Basis of Design, dated December 27, 1996

1.1 SITE HISTORY AND PROJECT OBJECTIVES

Tank Farm C is the site of a refueling facility for white fleet vehicles and is located north of the intersection of "A" Street and Curtiss Road. According to information provided in the Leaking Underground Storage Tank Corrective Action Plan, dated December 12, 1995, prepared by RC&A, petroleum-impacted soil and groundwater present at the site were suspected to result from a release of gasoline and diesel fuel from active and former gasoline and diesel underground storage tanks (USTs). The active gasoline and diesel USTs associated with the release are identified as Tank 1, Tank 2, and Tank 3, which are located in the northern region of Tank Farm C. In addition, eleven former gasoline USTs are associated with the release and were removed in 1992 and 1993 from the eastern and southern regions of Tank Farm C. Free product has been measured in three wells in thicknesses ranging from 4.65 feet to 0.95 feet. As of February 1995, a total of 24 gallons

of free product has been removed from well 14GW-27 through the use of a passive skimming collection system. A Basis of Design was submitted for free product removal and the remediation of petroleum-impacted soil and groundwater in December 1996 by RC&A.

The three project objectives are to remove the free product, to prevent further migration of petroleum-impacted groundwater, and to reduce contaminant levels in the soil and groundwater to site rehabilitation levels using air sparge, biosparge, soil vapor extraction, and free product vapor extraction methods.

Free product removal will be accomplished by applying a vacuum to the subsurface using five horizontal free product vapor extraction wells installed approximately 6 feet below land surface (ft bls) in the vadose zone above the free product. The vacuum will cause the product constituents to volatilize, and the vapors will then be extracted from the subsurface and discharged to the atmosphere.

Soil and groundwater treatment will be accomplished by injecting compressed air into the groundwater through two horizontal air sparge wells installed to a depth of approximately 30 ft bls and two horizontal biosparge wells installed to a depth of approximately 50 ft bls. Three horizontal soil vapor extraction wells will be installed approximately 6 ft bls in the vadose zone between the water table and ground surface. The air sparge and biosparge systems are designed to increase the vaporization of the volatile petroleum contaminants, as well as to enhance the biodegradation of the semi-volatile contaminants, by introducing oxygen into the groundwater. The soil vapor extraction system will recover the volatilized petroleum vapors produced by the air sparge and biosparge systems, as well as remove the volatile petroleum vapors from the soil.

The soil and groundwater treatment system is designed to reduce the elevated groundwater constituents detected at the site to rehabilitation levels regulated by the North Carolina Department of Environment, Health, and Natural Resources (NCDEHNR). These site rehabilitation goals are provided in the North Carolina Administrative Code (NCAC) Title 15A Subchapter 2L *Classifications and Water Quality Standards Applicable to the Groundwaters of North Carolina.*

According to the Corrective Action Plan, dated December 12, 1995, prepared by RC&A, the primary groundwater contaminants identified at the site are benzene, toluene, ethylbenzene, xylenes, 1,2-dichloropropane, 1,2-dichloroethane, and chloroform. The maximum detected groundwater concentrations in micrograms per liter (µg/l) of the these constituents, as presented in the Corrective Action Plan, with their corresponding site rehabilitation levels, as established in NCAC Title 15A Subchapter 2L, are provided as follows.

Groundwater Constituent	Maximum Detected Concentration	Site Rehabilitation Concentration
Benzene	12,700 µg/l	1 µg/l
Toluene	12,400 µg/l	1,000 µg/l
Ethylbenzene	9,880 µg/l	29 µg/l
Total Xylenes	27,700 µg/l	530 µg/l
1,2-Dichloropropane	0.8 µg/l	0.56 µg/l
1,2-Dichloroethane	5.1 µg/l	0.38 µg/l
Chloroform	2.9 µg/l	0.19 µg/l

The objectives for petroleum-impacted soil include eliminating the adsorbed hydrocarbons as an ongoing source of groundwater contamination through leaching and desorption and complying with NCDEHNR guidelines which require remediation of all soil containing petroleum hydrocarbons in excess of target rehabilitation concentrations. The site-specific NCDEHNR rehabilitation concentration for vadose zone petroleum-impacted material is also provided in the Corrective Action Plan. This rehabilitation level established for total petroleum hydrocarbons (TPH) is 10 milligrams per kilogram (mg/kg) using United States Environmental Protection Agency (USEPA) Method 5030/Modified 8015, 40 mg/kg using USEPA Method 3550/Modified 8015, and 250 mg/kg as oil and grease using USEPA Method 9071.

1.2 SCOPE OF WORK

1.2.1 Setup/Construction of Temporary Facilities and Site Controls

This task will consist of the mobilization of personnel and equipment to the work site and the establishing of the temporary facilities, including decontamination and material stockpile areas. Temporary facilities will include portable sanitary facilities, an equipment laydown area, a stockpile area, a decontamination area, and a site refuge area. J.A. Jones will utilize its Cherry Point office trailer located on Roosevelt Boulevard during completion of the on site project activities. Project management and scheduling activities, including contractor coordination, will be conducted at this office trailer which is equipped with telephone and facsimile capabilities. Office supplies, field equipment, and personal protective clothing and equipment (PPE) will be stored in the office and/or equipment trailer. Prior to the commencement of construction, the horizontal well and trench locations will be marked and an underground utility survey will be performed. Site controls such as construction barricades, security fencing, and sediment control features will be installed during this phase.

Prior to the commencement of any trenching or well installation activity, J.A. Jones will conduct a utility clearance survey and prepare the soil staging and stockpile areas as shown on **Figures C-5** and **C-15**. The well installation and trenching areas at the work site will be well marked with paint and stakes, as appropriate; and an underground utility

survey will be conducted by contacting Ms. Karen Boyd. Ms. Boyd will issue a work request to Facility Maintenance for assignment of personnel to perform the survey. Additionally, J.A. Jones will coordinate with the local public utilities to verify the existing underground utilities at the construction site. Utilities which intersect an excavation area will be physically verified by a locating service. All marked utility lines in the excavation area will be uncovered with hand tools. In addition, the progress of excavations conducted with machinery will be continuously monitored for signs of buried obstructions. Except in the vicinity of underground utilities, excavation and trenching will be performed using a backhoe or trench excavator. Uncovered utilities will be supported to prevent damage and will remain uncovered until permission to backfill is received from the contracting officer. Any resulting damage to underground utilities or subsurface structures will be immediately reported to the Resident Officer in Charge of Construction (ROICC) and subsequently repaired by J.A. Jones via methods approved by the ROICC.

Erosion control will consist of silt fences, which will be installed as outlined in **Section 4.0 Environmental Protection Plan** of this Work Plan. In addition, plastic sheeting, silt fences, and hay bales will be available on site for covering and berming staged material to control runoff or dust, or if it becomes necessary to contain soil in the staging area overnight. Detail P, **Figure C-15** provides a detail of the staked silt fence to be installed along the ends of the pipe trench excavations. Temporary containment of potentially contaminated excavated soil is depicted in Detail T, **Figure C-15**. The figure depicts the use of straw bales around the perimeter and plastic sheeting over the stockpiled soil. In addition, any excavation left open overnight will require temporary fencing around its perimeter. Detail Q, **Figure C-15** shows a detail of the temporary barricade fencing. An Erosion and Sediment Control Plan, provided in **Appendix B**, outlines the procedures to be implemented at the site to prevent sediment migration and erosion.

Trenching activities will generate debris including asphalt, concrete, and packaging materials. Asphalt and concrete material will be collected daily and disposed of in an on site waste collection container. When the container reaches its capacity, it will be transported to an MCAS disposal facility or an off site disposal facility licensed to accept construction and demolition debris.

1.2.2 Biosparge Well Installation

Two horizontal biosparge wells will be installed using a horizontal drilling technique to a depth of approximately 50 ft bls. Biosparge well BS1 will be constructed using three 1-inch diameter, SDR-11 polyethylene (PE) pipes. Biosparge well BS2 will be constructed using two 1-inch diameter, SDR-11 PE pipes. The SDR-11 PE pipe will be assembled in accordance with the manufacturer's recommendations using socket fusion equipment designed for joining thermoplastic pipe. The socket fusion machine will be supplied by the factory with written instructions on installation procedures. J.A. Jones has experience in the installation of the SDR-11 PE pipe using the socket fusion equipment. Biosparge wells BS1 and BS2 will have total bore lengths of approximately 770 and 610 linear feet,

respectively. The total bore length for each biosparge well includes a 200-foot setback on each side of the biosparge zone to allow for the entry and exit of the drilling auger. The biosparge zone for biosparge well BS1 will be divided into three equal sections, with approximately 124 linear feet of 1-inch diameter, 0.02-inch slot width, SDR-11 PE pipe in each section. The biosparge zone for biosparge well BS2 will be divided into two equal sections, with approximately 105 linear feet of 1-inch diameter, 0.02-inch slot width, SDR-11 PE pipe in each section. A detail of the horizontal biosparge well is shown in Detail D, **Figure C-12**. The well locations are depicted in **Figures C-7** and **C-8**. Valve boxes, each containing a pressure regulator, pressure indicator, and flow meter, will be installed to allow access to the pipe connections, and to record the pressure and flow to each well. Details of the valve boxes are shown in Details M and N, **Figure C-14**.

Horizontal drilling will be accomplished using a bentonite or bentonite/polymer based drilling fluid. A high flow, low pressure mud handling system will be used with a drilling fluid designed to provide the necessary gel strength to verify successful bore completion while enabling proper well development. Down hole wire tracking will be used to guide the drilling augers in the correct direction, both vertically and laterally. The wire line system can achieve measurement accuracy of +/- one percent. The wire line system uses a transmitter on the drill head wired to a computer located at the drill rig to identify the location and direction of the horizontal well.

Prior to commencement of drilling activities, an entry and exit point for the auger will be excavated. The required excavation will be approximately five feet long, five feet wide, and five feet deep. The excavated area will be lined with 10 mil polyethylene sheeting and will serve as a sump to collect the drilling fluid and well cuttings. The wells may be developed using a combination of techniques including borehole jetting, swabbing, air injection, and the use of additives to break down the drilling fluid. The drilling fluid and well cuttings will be pumped to on site roll-off containers. Samples of the materials will be collected and analyzed in accordance with the requirements outlined in **Section 2.0 Sampling and Analysis Plan**.

1.2.3 Air Sparge Well Installation

Two horizontal air sparge wells will be installed using a horizontal drilling technique to a depth of approximately 30 ft bls. Air sparge well AS1 will be constructed using three 1.5-inch diameter, SDR-11 PE pipes. Air sparge well AS2 will be constructed using two 1.5-inch diameter, SDR-11 PE pipes. Air sparge wells AS1 and AS2 will have total bore lengths of approximately 610 and 450 linear feet, respectively. The total bore length for each air sparge well includes a 120-foot setback on each side of the air sparge zone to allow for the entry and exit of the drilling auger. The air sparge zone for air sparge well AS1 will be divided into three equal sections, with approximately 124 linear feet of 1.5-inch diameter, 0.02-inch slot width, SDR-11 PE pipe in each section. The air sparge zone for air sparge well AS2 will be divided into two equal sections, with approximately 105 linear feet of 1-inch diameter, 0.02-inch slot width, SDR-11 PE pipe in each section. A

detail of the horizontal air sparge well is shown in Detail E, **Figure C-12**. The well locations are depicted in **Figures C-7** and **C-8**. Valve boxes, each containing a pressure regulator, pressure indicator, and flow meter, will be installed to allow access to the pipe connections, and to record the pressure and flow to each well. Details of the valve boxes are shown in Details M and N, **Figure C-14**.

The horizontal drilling procedure for the air sparge wells will be performed as described in **Section 1.2.2 Biosparge Well Installation**.

1.2.4 Soil Vapor Extraction Well Installation

Three horizontal soil vapor extraction wells will be installed using a horizontal drilling technique to a depth of approximately 6 ft bls. Soil vapor extraction well SVE1 will be constructed using three 3-inch diameter, SDR-11 PE pipes. Soil vapor extraction wells SVE2 and SVE3 will be constructed using 3-inch and 2-inch diameter, SDR-11 PE pipes, respectively. Soil vapor extraction wells SVE1, SVE2, and SVE3 will have total bore lengths of approximately 470, 200, and 120 linear feet, respectively. The total bore length for each SVE well includes a 25-foot setback on each side of the extraction zone to allow for the entry and exit of the drilling auger. The extraction zone for SVE well SVE1 will be divided into three equal sections, with approximately 140 linear feet of 3-inch diameter, 0.02-inch slot width, SDR-11 PE pipe in each section. The extraction zones for soil vapor extraction wells SVE2 and SVE3 will be constructed with approximately 150 linear feet of 3-inch diameter, 0.02-inch slot width, SDR-11 PE pipe and 70 linear feet of 2-inch diameter, 0.02-inch slot width, SDR-11 PE pipe, respectively. A detail of the horizontal SVE well is shown in Detail C, **Figure C-12**. The well locations are depicted in **Figures C-5** and **C-6**. Valve boxes, each containing a vacuum gauge, will be installed to allow access to the pipe connections, and to record the applied vacuum at each well. Details of the valve box are shown in Detail K, **Figure C-14**.

The horizontal drilling procedure for the SVE wells will also be performed as described in **Section 1.2.2 Biosparge Well Installation**.

1.2.5 Free Product Vapor Extraction Well Installation

Four of the five horizontal free product vapor extraction wells (FPVE1, FPVE3, FPVE4, and FPVE5) will be installed using a horizontal drilling technique to a depth of approximately 6 ft bls. Each of these four FPVE wells will be constructed using 1.5-inch diameter, SDR-11 PE pipe. Free product vapor extraction wells FPVE1, FPVE3, FPVE4, and FPVE5 will have total bore lengths of approximately 205, 190, 240, and 240 linear feet, respectively. The total bore length for each FPVE well includes a 25-foot setback on each side of the extraction zone to allow for the entry and exit of the drilling auger. The extraction zone for free product vapor extraction well FPVE1 will be constructed with 155 linear feet of 1.5-inch diameter, 0.02-inch slot width, SDR-11 PE pipe. The extraction zone for free product vapor extraction well FPVE3 will be constructed with 140 linear feet of 1.5-inch diameter, 0.02-inch slot width, SDR-11 PE pipe. The

extraction zone for free product vapor extraction wells FPVE4 and FPVE5 will each be constructed with 190 linear feet of 1.5-inch diameter, 0.02-inch slot width, SDR-11 PE pipe. A detail of these horizontal FPVE wells is shown in Detail B, **Figure C-12**.

The horizontal drilling procedure for the FPVE wells will also be performed as described in **Section 1.2.2 Biosparge Well Installation**.

Horizontal FPVE well FPVE2 will be constructed of approximately 20 linear feet of 1-inch diameter, 0.02-inch slot width, Schedule 40 polyvinyl chloride (PVC) well screen installed approximately 6 ft bls in a trench with an approximate depth of 7 ft bls. The well screen will be placed in washed pea gravel with a layer of geotextile fabric encompassing the pea gravel layer. The construction details for this horizontal free product vapor extraction well are shown in Detail F, **Figure C-13**.

The well locations are depicted in **Figures C-5** and **C-6**. Valve boxes, each containing a vacuum gauge, will be installed to allow access to the pipe connections, and to record the applied vacuum at each well. Details of the valve boxes are shown in Details I and J, **Figure C-14**.

1.2.6 Trenching and Piping System Installation

The air sparge/biosparge, SVE, and FPVE headers and horizontal FPVE well FPVE2 will be installed conventionally and excavated according to the treatment system layouts presented in **Figures C-5** through **C-8**. The pipe trench depths shall be approximately 3 feet bls. The maximum depth of the horizontal free product vapor extraction well trench shall be approximately 7 ft bls. The header piping and horizontal FPVE well FPVE2 will be installed in trenches in a natural progression leaving no more than 20-foot sections uncovered at a time. An appropriate means of egress from trench excavations is required for trench depths of four feet or more according to the Occupational Safety and Health Regulations (OSHA) [29 Code of Federal Regulations (CFR) part 1926.651(c)(2)], and protective systems, such as shoring or sheeting, are required for depths of five feet or more according to the OSHA regulation [29 CFR part 1926.652(a)(1)(ii)]. The protective system regulation requires that the ground be examined by a competent person and that there is no indication of a potential cave-in. The United States Army Corps of Engineers Safety and Health Requirements Manual (EM 385-1-1, September 1996) also requires a protective system in trench excavations of five feet or more. Since project personnel will not enter any trench over three ft bls, shoring and/or sheeting will not be necessary.

Trenches will be backfilled with any uncontaminated excavated material, if suitable, or other sources of fill in accordance with the Technical Specifications. Backfill material will be compacted underneath areas that are designated for vegetation and that are also outside the 5-foot line of the structure to 85% of American Society of Testing and Materials (ASTM) D 698. The top 12 inches of paved area subgrades and fill within the 5-foot line of the structure will be compacted to 95% of ASTM D 698.

Excavation activities will be continuously supervised by J.A. Jones personnel who will monitor the site for evidence of undetected utilities and petroleum, oil, and lubricant (POL) contaminated soil. J.A. Jones personnel will perform soil sampling during excavation activities in accordance with **Section 2.0 Sampling and Analysis Plan.** Contaminated soil will be stockpiled as discussed in **Section 3.0 Waste Stream Management Plan** or used as backfill in areas of influence of the SVE and FPVE systems.

In the event rainfall occurs during excavation activities, standing water will be removed by pumping prior to placing materials or backfilling. Standing water from excavations will not be discharged without the approval of the ROICC/Environmental Affairs Division (EAD). The uncontaminated water will be disposed in the immediate vicinity of the trench if water readily infiltrates the local ground surface (i.e., infiltrates with no ponding, no run-off to surface water courses, and no run-off to storm drains or sanitary sewers). In areas of known POL contamination, the water will be containerized, properly labeled, sampled and analyzed as outlined in **Section 2.0 Sampling and Analysis Plan**, and disposed of off site. It is anticipated that dewatering activities will not be required at the site since the maximum trench excavation will be approximately two feet above the highest observed seasonal groundwater elevation. However, if groundwater is encountered during trenching activities, a dewatering plan will be prepared and submitted to the ROICC/EAD for approval.

Compressed air will be supplied to the air sparge and biosparge wells through one main header which divides into two separate headers. The main header will be constructed of approximately 240 linear feet 3-inch diameter, SDR-11 PE pipe installed in a trench approximately three ft bls. Biosparge Header No. 1, which conveys compressed air to air sparge and biosparge wells AS1 and BS1, will be constructed of approximately 320 linear feet of 2-inch diameter, SDR-11 PE pipe. Biosparge Header No. 2, which conveys compressed air to air sparge and biosparge wells AS2 and BS2, will be constructed of approximately 270 linear feet of 2-inch diameter, SDR-11 PE pipe. The section of Biosparge Header No. 2 under Curtiss Road will be installed using a horizontal drilling procedure similar to that described in **Section 1.2.2 Biosparge Well Installation** to a proposed depth of approximately 10 ft bls. The drilling depth of Biosparge Header No. 2 will be based on the location of any on site utilities identified prior to trenching activities. The SDR-11 PE pipe will be assembled and tested in accordance with the manufacturer's recommendations using socket fusion equipment designed for joining thermoplastic pipe. The locations of the horizontal biosparge headers are shown in **Figure C-8**.

The soil vapor recovery system will consist of one horizontal soil vapor extraction header. The SVE header will be installed at an approximate depth of three ft bls and will consist of approximately 370 linear feet of 5-inch diameter, Schedule 40 PVC pipe. The location of the horizontal soil vapor extraction header is shown in **Figures C-5** and **C-6**.

The free product vapor recovery system will consist of one horizontal free product vapor extraction header. The FPVE header will be installed at an approximate depth of three ft

bls and will consist of approximately 210 linear feet of 2.5-inch diameter, Schedule 40 PVC pipe. The location of the horizontal free product vapor extraction header is shown in **Figures C-5** and **C-6**.

1.2.7 Treatment System Installation

This task will occur after placement of the treatment system concrete pad. The treatment system will be skid-mounted and installation will include the anchoring of the equipment skid. The air sparge/biosparge system will consist of a rotary vane air compressor, 80-gallon compressed air receiver, coalescing filter, regulator, and flow meter. The soil vapor extraction and free product vapor extraction systems will each be configured to allow vapors to pass through a moisture separator and a particulate filter prior to entering the positive displacement vapor extraction vacuum blower. Recovered vapor will be discharged directly to the atmosphere. A 500-gallon vertical polyethylene storage tank will be used to store condensate from the air compressor. In addition, fluid from the two moisture separators will be pumped to the storage tank. The treatment system will be secured by a chain-link fence as shown in Detail A, **Figure C-11** and Details R and S, **Figure C-15**.

Following placement and installation of the skid-mounted system, the equipment will be tied into the header piping and primary electrical system and tested for proper operation. Treatment system start-up will be performed upon completion of all system testing. System start-up will be followed by 180 days of operation and maintenance.

1.2.8 System Testing

The air sparge/biosparge and vapor extraction piping will be tested in accordance with the manufacturer's recommendations and the information provided in the Technical Specifications. All system components will be tested and installed in accordance with the Technical Specifications.

1.2.9 Site Restoration

Each excavation will be backfilled to original grade. Top soil will be placed in areas to be seeded with grass and vegetation as depicted in the treatment system layouts shown on **Figures C-5** through **C-8**. The seed will match existing vegetation and will be placed at 5 pounds per 1,000 square feet. CID A-A-1909, Type I, Class 2, 10-10-10 analysis fertilizer will be provided at 25 pounds per 1,000 square feet.

Asphalt will be replaced in accordance with the treatment system layouts shown on **Figures C-5** through **C-8** and Detail U on **Figure C-15**. A minimum of eight inches of stone base course aggregate, standard Size No. 21A, meeting the gradation requirements of the North Carolina Department of Transportation (NCDOT), will be placed on the compacted fill material. A minimum of 2 1/2-inches of prime coat and bituminous pavement will be placed to match the existing type and thickness.

Fill material placement and the placement of the treatment building concrete pad will be completed in accordance with the requirements provided in **Section 2.2.1 Concrete** and **Section 2.2.2 Backfill and Fill Material Testing** of this Plan. These required tests include concrete mix design tests and density tests for material placed under slabs or areas to be repaved.

1.2.10 Demobilization

During demobilization, temporary facilities, utilities, and equipment will be removed from the site. In addition, any debris or litter remaining from construction activities will be removed.

1.2.11 Operation and Maintenance

The treatment system will be started, operated, and maintained for a period of 180 days. Collection of groundwater samples from existing on site monitoring wells will be conducted as specified in **Section 2.0 Sampling and Analysis Plan**. An operation and maintenance manual will be prepared that documents sampling activities, normal operating conditions, and troubleshooting guides. This manual will be submitted to the Navy for review and approval at the end of system installation. Navy comments will be incorporated into the final manual before system turnover.

Technical personnel performing scheduled operation and maintenance will provide oversight of the treatment system operation. System deficiencies will be documented in a bound notebook for site history, and corrected. Technical personnel are responsible for providing a report to the project superintendent for review each time the system is visited. They will also be responsible for collecting required groundwater monitoring well and vapor effluent samples in accordance with **Section 2.0 Sampling and Analysis Plan**.

At the completion of operation and maintenance activities, the treatment system will be turned over to the Navy for operation. The operation and maintenance manual will be provided and training of Navy/Contractor personnel will be conducted prior to system turnover. The Site Quality Administrator (SQA) and technical personnel will verify the system is operating in accordance with the technical specifications.

1.3 PROJECT SCHEDULE

The project construction activities and estimated completion periods are outlined below. Several of the construction activities will occur concurrently; and the expected duration from the pre-construction conference through demobilization will be approximately twenty weeks. Preconstruction preparatory activities are not included in the twenty weeks and are expected to take approximately ten weeks. **Appendix A** provides a construction schedule for the work to be performed under this Delivery Order.

Preconstruction Submittal Preparation and Reviews	10 weeks
Mobilization/Construction of Temporary Facilities	1 week

Survey and Locate Utilities	1 week
Geotechnical Testing	1 week
Trench Excavation and Piping Placement	4 weeks
Horizontal Well Installation	10 weeks
Manway Placement	3 weeks
Sampling, Transportation and Disposal of Contaminated Material	3 weeks
Electrical Panel and System Structure Wiring	3 weeks
Treatment Building Foundation Construction	1 week
Equipment Placement	1 week
System Start-up	1 week
Site Restoration and Demobilization	1 week

Pipe trenching and other on site activities will be coordinated with facility personnel to minimize operational conflicts. In accordance with Paragraph 1.9.1 of Section 01115 General Paragraphs of the Delivery Order Specifications, work hours will be limited to an eight and one half hour period established by the ROICC Monday through Friday. Work will not be scheduled for Saturday or Sunday. Exceptions will be made for emergencies only. Additionally, no open trenches will be left unsecured overnight; and if possible, no open trenches will be left over the weekend.

1.4 REPORTING

A list of deliverables and their anticipated submittal dates is provided in this Work Plan. These anticipated submittal dates match those deliverables listed in the Specification Section 01115, General Paragraphs.

Deliverables	Submittal Date(s)
Design Drawings	Submitted with Work Plan. Marked sets of as-built construction drawings will be delivered to the Navy Technical Representative (NTR) at project completion
Environmental Conditions Report	Two weeks prior to construction
Network Analysis Diagram	Within 30 days of Work Plan approval
Status Reports	Every 30 days from Work Plan approval
QC Meeting Minutes	Three calendar days after each QC meeting
Contractor Production Report	Daily
Contractor Quality Control Report	Daily
Rework Items List	Monthly during field operations
Permits	Digging and/or boring under railroad permits will be obtained by J.A. Jones Environmental
Contractor's Closeout Report	Project completion

Once approved, one set of full size contract design drawings will be at the site and available to the NTR for review during the project. At the completion of the project, the

marked sets of drawings indicating changes to the design will be delivered to the NTR. Field Survey Notes will be submitted with the final as-built drawings. An electronic file of the as-built drawings will also be submitted to the NTR at this time.

J.A. Jones will prepare an Environmental Conditions Report prior to the commencement of construction. Photographs of the pre-construction condition of the work site will be incorporated into the report. Pictures of roads, sidewalks, and storage and staging areas subject to heavy and repeated loading will also be taken and incorporated into the report. Copies of the Environmental Condition Report will be submitted to the NTR within two weeks of the start of construction.

As part of the Contract Management System (CMS), the Network Analysis Diagram and the Monthly Status Report provide an ongoing tracking system designed to limit project pitfalls and monitor project activities and upcoming events. The information required in the Monthly Status Report will be submitted in accordance with Paragraph 5.5.1, Section C of the Base Contract.

Copies of the minutes from QC meetings will be delivered to the NTR within four calendar days after each meeting. Contractor Production Reports are required to be completed by the Site Superintendent for each day work is performed. These daily reports will document the work performed and project events. A copy of the Contractor Production Report is provided in Section C, Part 6.0, of the Basic Contract and **Figure 6-1** of this Plan.

Contractor Quality Control Reports are required to be completed by the QC Manager for each day that work is performed. These daily reports identify the control phase, the definable feature of work, meetings held, approved submittals, compliance with material usage and storage, field testing completed, and work methods and schedule. A copy of the Contractor Quality Control Report is provided as **Figure 6-2**. **Section 6.0 Quality Control Plan** identifies the QC requirements for this project.

A Rework Items List will document the work that does not comply with the contract. The list includes the items that need to be reworked, the discovery date of the reworked items, and the date that they were corrected. The Rework Items List will be maintained by the SQA and will be submitted with the last daily Contractor Quality Control Report of each month. A copy of the Rework Items List is provided as **Figure 6-4**.

The digging and/or boring under railroad permits necessary to complete the project will be obtained by J.A. Jones Environmental. Registration of the soil vapor extraction system and free product vapor extraction system air emissions will also be completed by J.A. Jones Environmental. Both the permits and the registration forms will be submitted through MCAS EAD. J.A. Jones Environmental will also submit copies of all well construction records to MCAS EAD

At the completion of the project, J.A. Jones will submit a Contractor's Closeout Report. This report will include an introduction, summary of action, final health and safety report, summary of record documents, field changes and contract modifications, final documents, complete set of data validation results, off site transportation and treatment of materials, and a QC summary report.

1.5 GOVERNMENT FURNISHED PROPERTY

J.A. Jones anticipates that government-furnished property will not be required during the project. However, any equipment, materials, or other items purchased by the Navy for this project will remain the property of the Navy following completion of the project. The items will either be turned over to the ROICC or will remain with J.A. Jones to be used on other Delivery Orders issued under this contract. An inventory for these items will be maintained by J.A. Jones to track the disposition of each item.

SECTION 2.0

SAMPLING AND ANALYSIS PLAN

Waste characterization samples will be collected from the soil accumulated during pipe trench excavation and horizontal well installation activities to determine if soil is contaminated and does require disposal. Groundwater samples from well development activities will be collected to characterize the groundwater. Contaminated groundwater generated during the construction phase will be either transported to a treatment or recycling facility or conveyed to an existing operational groundwater recovery and treatment system at Cherry Point MCAS. Groundwater monitoring samples will be collected to evaluate the size of the groundwater contaminant plume and the performance of the soil and groundwater treatment system. Any incidental waste stream, such as decontamination water, generated as a result of project activities will be properly containerized and sampled to evaluate disposal requirements.

This Sampling and Analysis Plan outlines the required testing of soil, water, air, and construction materials as related to the completion of this Delivery Order. The following sections provide detailed discussions and procedures for field sampling and analytical testing for this Delivery Order. **Section 2.1** details the required analytical testing of soil, water, and air samples for chemical constituents. **Section 2.2** details the required physical testing of construction materials. The results of these tests, samples, and analyses will be submitted for Navy approval in accordance with the applicable division of the Submittal Register found as **Table 6-1**.

2.1 CHEMICAL SAMPLING AND ANALYTICAL TESTING

2.1.1 Purpose and Scope

2.1.1.1 Sampling Strategy

The goal of this sampling program is to collect representative samples of the media to be tested. The personnel responsible for the sampling activity will investigate and understand the need for, and requirements of, the sampling program, and develop an appropriate sampling strategy in advance of collecting samples. **Table 2-1 Summary of Field Sampling and Analysis** provides a summary of required chemical sampling and analytical testing.

In general, samples will be collected from the areas of least contamination to the areas of most contamination for the sampling event. Results from prior sampling events will be evaluated regarding expected contaminant levels and used to establish the sampling order. Samples at each location will be collected in the following order: volatile organic compounds (VOCs), TPH, metals, inorganics.

For sampling associated with this Delivery Order, the following strategies are identified:

- Excavation Water: Water accumulating in open excavations, including both subsurface recharge and surface run-in, will be sampled to determine contaminant levels prior to discharge/disposal.

- Excavation Soil: Excavated soil will be field sampled daily for the purpose of determining whether the material can be used for on site fill. The techniques and requirements for this sampling methodology are outlined in **Section 2.1.1.2**.

- Monitoring Wells: Quarterly samples for analysis by USEPA Methods 601 and 602 will be collected from monitoring wells 14GW4 through 14GW9, 14GW16 through 14GW21, 14GW23, 14GW24, 14GW34, 14GW36, 14GW38, and 14GW39 for the first and last years of system operation. Semi-annual sampling will be collected in the interim. The last year of system operation will begin following consecutive semi-annual events indicating concentrations are less than or equal to Groundwater Quality Standards. Monitoring will be terminated following the last year of sampling events if each of the events indicates concentrations are less than or equal to Groundwater Quality Standards, or negotiation with the NCDHNR.

- Effluent Vapor: Air discharge permits for the vapor extraction systems should not be required. However, as discussed in **Section 1.4** of this Plan, J.A. Jones will calculate the anticipated emissions and register the systems. In addition, the effluent vapor will be sampled using USEPA Method 18 at system start-up, monthly for the first quarter, and quarterly thereafter.

- Air Monitoring: The measurement of organic vapors is a required step during trench excavation and well installation field activities. The primary purpose of such measurements is health and safety monitoring to evaluate if the breathing zone in a work area is acceptable or if personal protective equipment such as a respirator or a supplied air device is necessary for field personnel. **Sections 2.1.1.2.2** and **5.8.1.2** outline the techniques and the requirements for the continuous measurement of organic vapors during incidences where work is being conducted in the area of the piping trenches and wells.

2.1.1.2 Sampling Methodologies

Sample containers will be provided by the selected laboratory to perform the analyses. The selected laboratory's data validation and quality analysis procedures will conform to USEPA and NCDEHNR laboratory certification Quality Assurance/Quality Control (QA/QC) requirements. These stringent requirements provide written procedures for laboratory methodologies, equipment, and quality analyses. Each certified North Carolina laboratory is inspected on an annual basis to verify laboratory operations are being conducted in conformance with certification requirements.

The laboratory will also provide shipping containers and custody seals for each shipping container. The laboratory will be responsible for a determination of the required sample volume. The laboratory will be responsible for determination and supply of preservatives, including any limitations on shipping by air. Sample containers will be kept closed until immediately before placement of the sample into the container.

Collection of samples will be completed by personnel wearing unpowdered, disposable gloves constructed of Latex or Nitrile. A new pair of disposable gloves will be worn each time a different location is sampled, and gloves will be donned immediately prior to sampling. Each sample will be placed in the sample container directly, whenever possible. Samples will be immediately placed into a cooler with ice, or a refrigerator.

Collection equipment and monitoring instruments for soil and/or water samples will be constructed of Teflon, stainless steel, or glass that has been decontaminated prior to use by the procedure identified on **Figure 2-1**. Disposable aluminum containers or disposable liners constructed of aluminum foil are acceptable in lieu of decontaminated equipment. Gloves or equipment constructed of plastic or PVC shall not be used to collect samples.

Collection of water samples for analysis of volatile hydrocarbons and aromatics will involve special handling of septum-sealed vials (i.e., VOC sample containers). The vial will be filled so that the sample surface is above the container rim (i.e., convex meniscus) and the lid quickly applied so there are no air bubbles. Extreme caution will be exercised when filling the vial to avoid any turbulence which could produce volatilization. The sample will be carefully poured down the side of the vial to minimize turbulence. If air bubbles occur, the lid will be removed, additional sample added, and the lid reapplied (and repeated until no air bubbles are present). Wastes (i.e. gloves, disposable sampling equipment, decontamination fluids, purge water, etc.) generated by sampling efforts will be collected and disposed of in accordance with **Section 3.0 Waste Stream Management Plan**.

2.1.1.2.1 Samples for Waste Characterization

Waste sampling as discussed in this section includes soil and water samples as related to characterization of materials for disposal (including recycling and/or reuse). The intent of the sampling effort will be to take all reasonable efforts to obtain a representative sample of the waste for characterization by laboratory analysis. Samples will typically be collected from material which has been staged (i.e., stockpile for soil or temporary holding tank for liquids). For materials which are sampled in-place, efforts will be taken to evaluate in-situ conditions (i.e., data from prior sampling events, field screening by flame ionization detector (FID), observation of product staining, etc.) to determine expected worst case location(s) (i.e., locations with highest levels of contaminants), and samples will be collected at expected worst-case locations.

SOIL

Waste characterization samples will be collected to evaluate handling, transportation, and disposal requirements in the event that petroleum-impacted soil is encountered during trench excavation and well installation activities. Soil excavated during installation of the pipe trenches will be screened in the field with a photoionization detector to segregate soil which is potentially contaminated. Screened soil that exhibits a FID reading of 10 parts per million (ppm) above ambient air levels will be segregated; and for every 200 cubic yards of soil, a composite sample, consisting of six grabs, will be collected, delivered to a State approved laboratory, and analyzed for TPH using USEPA Methods 3550/Modified 8015, 5030/Modified 8015, and 9071.

In an effort to reduce the amount of soil requiring treatment, soil exhibiting FID readings above 500 ppm will be further segregated and sampled as discussed above. Each stockpile whose analytical results reveal a TPH concentration greater than 10 mg/kg using USEPA Method 5030/Modified 8015, 40 mg/kg using USEPA Method 3550/Modified 8015, or 250 mg/kg as oil and grease using USEPA Method 9071, will require off site transportation to a treatment or recycling facility permitted to accept petroleum-impacted soil. A grab sample will be collected from the stockpiles with TPH concentrations above the site rehabilitation limits, and analyzed for the treatment parameters required by the disposal facility permitted to accept the waste.

Similarly, a composite soil sample consisting of six grabs from the well drill cuttings will be collected, delivered to a State approved laboratory, and analyzed for TPH using USEPA Methods 3550/Modified 8015, 5030/Modified 8015, and 9071. The same disposal criteria for the pipe trench soil material applies to the drill cuttings. Therefore, a grab sample will be also be collected from the well drill cuttings and analyzed for the off site treatment parameters required by the disposal facility permitted to accept the waste.

Composite samples will be collected at a frequency required by the NCDEHNR guidance document *Guidelines for the Investigation and Remediation of Soils and Groundwater.* This guidance document requires the collection of a composite sample for laboratory analyses for each 200 cubic yards of excavated soil. The composite sample will consist of six grab samples representative of the material being sampled. The grab samples will be thoroughly mixed to obtain a relatively homogeneous mixture.

The samples will be collected from the stockpile using a clean, plastic or stainless steel sampling utensil and mixing bowl, as outlined in specifications. Equal amounts of soil will be collected from six locations within the soil pile and will be mixed in the composite bowl. A sketch will be made of the sample locations.

Stockpile soil samples will be collected by using decontaminated sampling equipment to dig to a depth of 12 inches below the surface at the sampling location. The sample will then be collected by hand with disposable gloves donned immediately prior to collecting the sample or by using equipment (i.e. shovel, auger, etc.) decontaminated prior to

collecting the sample. The sample will typically be placed in a pan and thoroughly mixed. However, if the sample is for purgeable organic compound analysis [i.e., VOCs and/or benzene, toluene, ethylbenzene, and xylenes (BTEX)], then a portion of the sample will be directly placed into the sample container without mixing and compacted so that no head space remains in the sample container. Sample containers will be filled completely and compacted so that no head space remains in the sample container. The container rim will be cleaned of soil and particles so the lid can be sealed and the outside of the container will also be cleaned.

Mixing of samples will be completed by the quartering method. Quartering will involve dividing the soil in the sample pan into quarters, thoroughly mixing each quarter, and then recombining all quarters into the center of the pan. The quartering procedure will be followed several times until the sample is adequately mixed. Sample mixing will be achieved by stirring the material in a circular fashion and occasionally turning the material over.

Compositing of soil samples will involve the combining of grab samples from different locations. Individual grab samples combined to make the composite will be of the same volume (typically be in the range of 16 to 32 ounces) and will be thoroughly mixed/combined using the quartering method discussed previously. Compositing procedures will be implemented for specific circumstances as follows:

- For soil in stockpiles, grab samples will be taken at six locations and composited into one sample. The six locations will be selected so that each location is representative of approximately 1/6 of the pile volume.

- For soil in drums, one grab sample will be collected from each drum and composited into one sample. Note that closed drums shall be accessed using non-sparking techniques and tools. If more than six drums of waste soil are present, six representative drums will be selected and one sample from each of those drums will be collected and composited into one sample.

- For in-situ soil sampling in unshored excavations deeper than four feet, grab samples will be taken from an excavation equipment bucket (i.e., sampler will not enter the excavation) and then the grab sample discretely collected (typically in the range of 16 to 32 ounces of sample) from a portion of the bulk sample which has not contacted the equipment bucket.

The waste characterization sampling and analytical requirements for petroleum contaminated soil will be based on the selected State permitted disposal facility.

WATER

Water samples will be collected by using decontaminated sampling equipment capable of removing a sample from a depth at 12 inches below the water surface. Typically, the

sample will be collected using a disposable bailer. Collection of the sample will include collection of data including pH, temperature, conductivity, and appearance (turbidity) immediately prior to containerization of the sample. Sample collection will be completed by directly pouring from the sampling device into the sample container without allowing the device or hands to touch the rim of the sample container. Each sample container will be filled as completely as possible with a minimum of 90 percent of the container filled (note volatile organic aromatics (VOAs) to be completely filled per the procedure outlined in Section 2.1.1.2). The sample container lid will be immediately placed and tightened.

Collection of the sample will involve special circumstances in the following situations:

- In the event free phase product is present at the sampling location, absorbent materials will be applied to the liquid surface to allow the collection device to penetrate the water without contacting product. Also, the sampling will be completed at least 24 hours after the last disturbance of the liquid (i.e. last addition of liquid to the holding tank, etc.) to allow sufficient time for product/water decanting.

- Frac tank contents will be mixed prior to sampling using a bubbling device or other means to ensure a representative sample. For water in drums, one grab sample will be collected from each drum. Note that closed drums shall be accessed using non-sparking tools and techniques, and individual grab samples will be of the same volume (typically be in the range of 16 to 32 ounces) and will be combined to form a composite sample. The composite will be thoroughly mixed/combined by stirring. If more than five drums of water are present, five representative drums will be selected and one sample from each of those drums will be grabbed and composited into one sample.

- For in-situ water sampling along open trenches, one sample composite will be collected for every 5,000 gallons of water. Each composite sample will involve 5 grab samples collected from the ends and quarter points along the trench.

2.1.1.2.2 Air Monitoring Measurements

As discussed in **Section 2.1.1.1**, the measurement of organic vapors is a required step during trench excavation and horizontal well installation field activities. The following outlines the procedures which will be employed for direct measurement of organic vapors:

- Connect measurement probe to instrument and make necessary operational checks (e.g., battery check, etc.) as outlined in the manufacturer's manual.
- Calibrate the instrument according to the manufacturer's manual.
- Verify that the instrument is reading zero and that all function and range switches are set appropriately.

- Insert the end of the probe directly into the atmosphere to be measured (e.g., breathing zone, monitoring well casing, split spoon, mason jar, etc.), and read the organic vapor concentration in ppm from the instrument display. Record the highest instrument response.
- Immediately document the reading in the field logbook, or on the appropriate field form.

2.1.1.3 Sample Handling

Handling of sample containers after completion of sampling will be minimized. Sample containers will be placed into shipping containers as soon as possible. Sample containers will be placed in plastic bags prior to placement into shipping containers. Packing will be provided between containers to avoid breakage. Shipping containers will be sealed with strapping tape to avoid tampering during transport to the laboratory. If shipped by common carrier, documentation (i.e., chain of custody, etc.) will be placed in a sealed plastic bag taped to the inside of the shipping containers.

Special handling procedures must be used for samples requiring an environment maintained at 4 degrees Celsius (i.e., samples to be analyzed for VOCs, semi-volatiles, BTEX, and/or TPH). Shipping containers will be insulated coolers and packed with wet ice (dry ice, blue ice, or chemical cooling packs will not be used). Samples will be delivered or shipped to allow for receipt at the laboratory within 24 hours of packaging.

Samples will typically be considered non-hazardous substances and will be transported to the laboratory by commercial shippers (i.e., Federal Express, U.S. Mail, etc.) or directly delivered if the laboratory is within a one hour drive of the site. Shipping labels for non-hazardous substances will identify the samples as "soil/water/air samples."

If the sample is known or suspected to be a hazardous substance, a sample specific protocol will be developed prior to sample transport. The specific protocol will be in accordance with the requirements of United States Department of Transportation (USDOT) regulations for hazardous materials per 49 CFR Parts 110-1 19.

The following criteria will be used to determine whether a sample is to be considered a hazardous substance:

- Any sample with visible free phase product, whether a liquid sample with segregated free phase or solid with visible adsorbed free phase, will be considered hazardous.

- Sludges or other residual contents of tanks or other vessels will be considered hazardous.

- Any sample from an area or waste stream known (based on analytical results from prior sampling events) to be Resource Conservation and Recovery Act (RCRA)-

hazardous in accordance with criteria of 40 CFR Part 261 (i.e. ignitability, corrosivity, reactivity, or toxicity characteristic) will be considered hazardous.

- Any sample suspected (in judgment of sampler based visual, nasal, or other observed characteristics) to be RCRA-hazardous in accordance with criteria of 40 CFR Part 261 will be considered hazardous.

2.1.1.4 Analytical Methods

Analytical testing will be completed in accordance with the requirements of the regulatory agency with jurisdiction for the work being completed. Generally, analytical methods will be established in permits and guidance documents for the work to include the CAP and the Technical Specifications. Analytical methods for the specific work to be completed under this Delivery Order are identified in **Table 2-1**.

2.1.2 Field Sampling Quality Control

Field quality control will include collection of Quality Control samples. QC samples will be collected and analyzed for the same parameters as the associated samples. All QC samples will be collected, handled, and documented in the same manner as other samples, and will remain with the sample set until received by the laboratory. QC samples will be collected for each sampling event, including water sampling, solid sampling, and combined water/solid sampling events. QC samples will include the following:

- *Trip Blanks:* Trip blanks will be implemented only for VOC samples. The trip blanks will be prepared by the laboratory. The trip blank will include one set of VOC vials filled with analyte-free water. The trip blanks will be placed in the same transport container as empty VOC vials and be returned to the laboratory in the same shipping container as VOC samples. A trip blank will be submitted for each cooler that transports ten or more empty or full VOC vials. The trip blanks remain unopened for the entire sampling episode.

- *Pre-Cleaned Equipment Blanks:* These blanks will be collected on equipment that is brought to the site precleaned and ready for use. Precleaned equipment will include disposable sampling equipment (i.e., disposable Teflon bailers, etc.). These blanks will be collected from the sampling equipment immediately prior to sampling by rinsing the sampling equipment with analyte-free water and collecting rinsate in the appropriate sample containers.

- *Field-Cleaned Equipment Blanks:* In the unlikely event that field decontamination of sampling equipment is necessary, these blanks will be collected on equipment that has been decontaminated in the field. These blanks will be collected after the equipment is decontaminated by rinsing the sampling equipment with analyte-free water and collecting rinsate in the appropriate sample containers.

- *Field Duplicates:* Duplicate samples will be collected and analyzed for the same parameters as the associated samples when five or more samples are taken in accordance with USEPA guidelines as established in their *Standard Operating Procedures and Quality Assurance Manual* (USEPA, Environmental Compliance Branch, Athens, Georgia, February 1, 1991). The duplicates will be collected using the same sample acquisition technique used to collect the first sample of the day and be collected immediately following the first sample of the day.

QC samples will be completed at the frequency identified on **Table 2-2**. QC samples for the specific work to be completed under this Delivery Order are identified in **Table 2-1**.

Quality control of field measurements will include calibration at the start of each sampling day of all field equipment in accordance with equipment manufacturer's recommendations.

2.1.2.1 Sample Labels

All sample containers will be labeled in advance of sampling activities. The sample label will include a unique sample identification number. The sample label will also include the date and time the sample was collected, the name (or initials) of the sampler, and the sample location. The label will also identify the container preservative, if any, as prepared by the laboratory.

The sample identification number will be of the following form:

Site - Location – Year, Quarter

For example, a quarterly sample collected under Tank Farm C of groundwater from monitoring well 14MW4 during the third quarter of the year would have the following identification number:

FarmC – 14GW4 – 98C

2.1.2.2 Sample Custody and Handling

A chain-of-custody record will be completed for each shipping container of samples. The chain of-custody record will typically be completed on a carbon-copy form provided by the laboratory. The record will, at a minimum, contain the following:

- Site name and address;
- Full name of sampler;
- Sample identification number for each sample;
- Date and time of collection for each sample;
- Sample matrix (liquid, solid, gas);
- Number of containers for each sample;

- Description of sample location for each sample;
- Required analyses for each sample;
- Preservation for each sample;
- Notation whether samples shipped on ice or not;
- Notation if sample is expected to be highly contaminated;
- Signature of person(s) involved in chain of possession;
- Transfer date(s) and time(s) in chain of possession; and
- The Purchase Order Number.

The preparer of the chain-of-custody form (i.e., sampler) will retain a copy of the form and attach the form to daily field logs for the project.

If the samples are shipped by common carrier, the chain-of-custody form will be placed in a sealed plastic bag inside the shipping container and the shipping container secured with strapping tape and a custody seal. Thus, in the case of the common carrier, two signatures will occur on the final chain-of-custody; one signature by the preparer of the form and one signature of the sample custodian assigned by the laboratory. The sample custodian assigned by the laboratory will open the shipping container and will denote any breaks to the custody seal of the shipping container and/or damage to the shipping container or sample containers on the chain-of-custody form.

2.1.2.3 Field Documentation

A Field Activity Daily Log form will be completed for each day of sampling. A copy of the form is provided on **Figure 2-2**. This daily log form will be completed using waterproof ink and will be placed in a dedicated on site binder at the completion of each sampling day. Individual sheets in the dedicated binder will be signed/initialed, dated, and sequentially numbered. The dedicated binder of the daily logs will be placed in the project file at the completion of each sampling event. The daily log will index and will have attached all other paperwork generated associated with the sampling, including well purge logs, equipment calibration sheets, sampling analysis request forms, chain-of-custody forms, and shipping receipts.

A single responsible party for field documentation will be designated whenever feasible. For multi-person sampling teams, the party responsible for documentation will be focused on the field documentation effort (i.e., daily log and related forms) and will not be a hands-on participant in collection of samples. The field documentation will include sufficient detail so that the history of each sample is clearly evident from the retained record. Logging of field data will vary widely depending on actual sampling situations. The general intent of logging will be to record sufficient information so that anyone can reconstruct the sampling without reliance on the collector's memory. Data will typically include a detailed description of equipment decontamination procedures, equipment calibration procedures, preparatory purging at each location, inventory of all generated wastes, and disposition of all generated wastes.

A copy of the daily log, including all attachments, will be attached to the Daily Production Report for the work.

2.1.3 Laboratory QA/QC

The laboratory will be certified with the Navy in accordance with NEESA 20.2-047B. An acceptable substitute for Navy approval according to NEESA 20.2-047B will be current certification and participation in the USEPA Contract Laboratory Program (CLP) or certification by the U.S. Army Corps of Engineers for environmental work. Evidence of pertinent certification will be provided by the laboratory prior to completion of any work. At the request of the ROICC or NTR, a laboratory certified by the NCDEHNR may be used.

QC checks (method blanks, matrix spikes, etc.) will be completed at frequencies established by the test method or the laboratory QA/QC Program, whichever is more stringent. QC checks run by the laboratory concurrent with the analysis of samples will be reported along with the sample results.

2.1.3.1 Laboratory Management of Samples

The laboratory will assign a sample custodian to receive samples. The sample custodian will open the shipping container and denote any damage to shipping container or sample containers on the chain-of-custody form for the samples. Upon receipt of a sample, the custodian will inspect the condition of the sample and reconcile the information on the sample label with the chain-of-custody record. The custodian will assign a laboratory number to each sample (to be denoted on the chain-of-custody), log in the sample in the laboratory logbook, and store the sample in a secured storage room or cabinet until assigned to an analyst for analysis. The sample shall be stored at conditions (i.e. 4 degrees Celsius if appropriate, etc.) and for maximum holding times identified by 40 CFR 136 (USEPA "Guidelines Establishing Test Procedures For The Analysis Of Pollutants").

The custodian will immediately contact the person completing the chain-of-custody in the event the seal on the shipping container is broken, any discrepancies between the chain-of-custody and sample labels are noted, or any sample container is damaged. Any problems noted by the sample custodian will be resolved with the sampler before the sample is assigned for analysis.

Once the sample is received by the analyst, that person is responsible for its care and custody, and that person should be prepared to testify that the sample was in his/her possession or secured in the laboratory at all times until the analysis was performed.

2.1.3.2 Sample Disposal

The laboratory will dispose of all samples in accordance with USEPA requirements. The laboratory will be responsible for determination of whether each individual sample is

"hazardous" or "non-hazardous" based upon guidelines established in 40 CFR 260. If deemed a hazardous waste by the laboratory, the sample and sample container will be disposed of at a facility permitted in accordance with the requirements of 40 CFR 264. If deemed a non-hazardous waste by the laboratory, the sample and sample container will be disposed of at a facility permitted in accordance with 40 CFR 257.

For non-hazardous wastes disposed of at a facility located in North Carolina, the sample and sample container will be disposed of as special waste designated as "Soil Contaminated with Petroleum Products" in accordance with NCDEHNR regulations.

2.1.3.3 Equipment Decontamination

The laboratory will decontaminate equipment in accordance with procedures established in the QA/QC Program which served as the basis of their certification identified in **Section 2.1.3**.

2.1.4 References and Miscellaneous Procedures

Procedures for chemical sampling and analysis have been developed to comply with standard industry practices. For issues or circumstances not covered in the preceding sections, standard practices will be implemented based upon guidance provided in reference documents (used to develop the procedures in the proceeding sections) as follows:

- Guidance of USEPA as established in their *Standard Operating Procedures and Quality Assurance Manual* (USEPA, Environmental Compliance Branch, Athens, Georgia, February 1, 1991)

- Guidance of the NCDEHNR as established in NCAC, Title 15A, Subchapter 2L *Classifications and Water Quality Standards Applicable to the Groundwaters of North Carolina* (November 8, 1993).

- Guidance of the NCDEHNR as established in *Groundwater Section Guidelines for the Investigation and Remediation of Soils and Groundwater* (January 2, 1998).

2.2 CONSTRUCTION MATERIALS SAMPLING AND TESTING

2.2.1 Concrete

Sampling and testing of concrete will be in accordance with detailed procedures established by the technical specifications for the work (the technical specifications will typically cross-reference procedures to specific ASTM standards). Testing will be completed by a testing laboratory certified with the North Carolina Department of Transportation for concrete testing with written evidence of certification received prior to

concrete placement. Field sampling and testing will be performed by technicians trained in concrete sampling and testing procedures.

Based on the Technical Specifications the following guidelines for sampling and testing will be followed for this Delivery Order:

- Concrete will have a 28-day compressive strength of 4,000 pounds per square inch (psi) and will be sampled during placement. Slump will be between 2 and 5 inches in accordance with ASTM C 143. Air content will be tested using ASTM C 33 aggregate Size No. 57 to verify 2 to 3 percent air entrainment for concrete exposed to freeze-thaw conditions. Cylinders will be taken for compressive strength testing. They will be broken on Day 7 and 28 to verify the concrete is 4,000 psi. A copy of test results for the mix design will be attached to the Daily Production Report for the initial day of use of each concrete supply.

- The time of arrival on site for each load of concrete will be logged. Loads will be placed within two hours of arrival on site. Any load, or portion of a load, on site in excess of this allowed holding time will be rejected and not used on site.

- Field tests for temperature, slump by cone method (per ASTM C 1 43), and entrained air by pressure method (per ASTM Method C231) will be completed for each load of concrete delivered to the site prior to placement of the load. Any load of concrete not meeting specified criteria will be rejected for use at the site. Material may be reworked on site (i.e., additional water, mixing, etc.) to meet specified criteria subject to the limits of the previously identified holding time.

- Three concrete cylinders will be collected (by ASTM C 172) for every 40 cubic yards of concrete placed with a minimum of one set of cylinders collected for each day of concrete placement. One cylinder will be tested for 7-day compressive strength and one cylinder will be tested for 28-day compressive strength (the third cylinder will be tested for 28-day compressive strength if the initial 28-day test indicated deficient strength).

2.2.2 Backfill and Fill Material Testing

The following testing reports will be submitted for approval prior to installation of backfill and fill material:

- Trench backfill material tests;
- Pipe bedding material tests; and,
- Topsoil tests.

Testing reports will be supplied by the material distributor. Fill and backfill material will be tested in accordance with the Technical Specifications.

All in-place density tests will be conducted in accordance with ASTM 1556, or ASTM D 2922 and ASTM D 3017. When ASTM D 2922 and ASTM D 3017 density tests are used, verify density results by performing an ASTM D 1556 density test at a location already ASTM D 2922 and ASTM D 3017 tested. Under slabs or areas to be repaved, backfill will be compacted to 95% of ASTM D 698. All other areas will be compacted to 85% percent of ASTM D 698 but will not require a compaction test.

An independent subcontractor will perform the field density tests. Data collected by the technician will be reviewed by the Site Superintendent and the Assistant Resident Officer in Charge of Construction (AROICC) to make any necessary adjustments in placement and compaction of the fill. Data will be recorded by the technician on a field log which will be submitted as part of the field density test submittal.

Field tests will be performed by a qualified technician. Factory and field tests will be completed in accordance with the Technical Specifications. In-place density testing will be performed by Nuclear Methods, and sand cone verification tests will not be performed. Granular backfill materials including gravel and sand will be compacted to non-movement.

Table 2-1
Summary of Field Sampling and Analysis
RAC Action for Statement of Work Design
Tank Farm C
Marine Corps Air Station
Cherry Point, North Carolina

Sample Description	Sample Location(s)	No. of Events	Number of Samples	Analytical Method	Required Turnaround Time	Comments
Treatment System Sampling	Soil Vapor Extraction System and Free Product Vapor Extraction System Effluents	Monthly for First Quarter and Quarterly Thereafter	1 from each system effluent	USEPA Method 18	Normal	Collected During Soil Vapor Extraction System and Free Product Vapor Extraction System Operation
Monitoring Well Sampling	18 (14GW4 - 14GW9, 14GW16 - 14GW21, 14GW23, 14GW24, 14GW34, 14GW36, 14GW38, and 14GW39)	Quarterly for the First and Last Years and Semi-Annually in the Interim	1	USEPA Methods 601 and 602	Normal	Collected During Soil and Groundwater Treatment System Operation
Groundwater Level Measurements	34 (14GW2 - 14GW27, 14GW34 - 14GW40, and 14GWA)	Monthly for First Six Months and Quarterly Thereafter	1	None	Normal	Collected During Soil and Groundwater Treatment System Operation
Waste Characterization, Incidental Waste Stream, Development and Purge Water, and Condensate and Soil Particle Water Sampling	Groundwater	As Required	1	USEPA Methods 601 and 602	As Needed	Analyses will be based on Disposal Facility's Requirements
	Soil	As Required	1	USEPA Methods 3550/Modified 8015, 5030/Modified 8015, and 9071	As Needed	Analyses will be based on Disposal Facility's Requirements
Quality Control Sampling	Equipment Blanks	(1)	-	(1)	As Needed	
	Trip Blanks	(1)	-	(1)	As Needed	
	Duplicates	(1)	-	(1)	As Needed	

(1) Frequency of quality control sample collection is provided in Table 2-1 QC Sample Frequency of this Work Plan.
Required analytical methods are provided in Section 2.0 Sampling and Analysis Plan of this Work Plan.

Table 2-2
QC Sample Frequency

RAC Action for Statement of Work Design
Tank Farm C
Marine Corps Air Station
Cherry Point, North Carolina

Sample Description	Total Number of Samples in Event		
	<5	5-9	10+
Trip Blanks (Only Shipping Containers with VOC vials)	NR	NR	One per Shipping Container
Pre-Cleaned Equipment Blanks	One*	One*	5%, Minimum of One
Field-Cleaned Equipment Blanks	One*	One*	5%, Minimum of One
Duplicates	NR	One	10%, Minimum of One

Notes:
1. NR - Not Required
2. One* - Either a Pre-Cleaned Equipment Blank or Field-Cleaned Equipment Blank

Figure 2-1
Equipment Decontamination Procedure

Definitions

Acid - 10% (minimum) nitric or hydrochloric acid solution. Solution to be made from reagent grade acid and deionized water. Typically, to be provided by laboratory supplying sample container.

Tap Water - Tap water from any municipal water treatment system. Bottled distilled water is an acceptable alternate. Water form an untreated potable water supply is not an acceptable alternate.

Deionized Water - Water containing no heavy metals or other inorganic compounds at or above analytical detection limits as determined by an inductively coupled Argon Plasma Spectrophotometer (ICP) Scan. Typically, to be tap water treated by a standard deionizing resin column and provided by the laboratory supplying sample containers.

Detergent - Alquinox or Liquinox. Alternate brands of phosphate-free laboratory detergents are acceptable.

Organic-Free Water - Deionized water containing no extractable organic compounds (or pesticides or herbicides) and less than 5 µg/l of purgeable organic compounds as measured by a low level GC/MS scan. Typically, to be water treated by activated carbon (and deionizing unit) and provided by the laboratory supplying sample containers.

Solvent - Pesticide-grade isopropanol. Alternately, pesticide-grade acetone (alternate since potential analyte in many situations) or methanol (alternate since more hazardous than isopropanol or acetone).

Decontamination Procedure

Step #1--Detergent Wash
- Wash thoroughly using brush and detergent solution (preferably made with hot tap water) to remove particulate matter.
- Equipment contaminated with oil, grease, or other hard to remove materials to be rinsed several times with solvent and/or steam cleaned if necessary.

Step #2--Tap Water Rinse

Step #3--Acid Rinse (Optional)
- Skip this step if using stainless steel or metal sampling equipment and for field instruments.
- Skip this step for field decontamination (i.e. only complete during off-site decontamination).
- Small and/or awkward equipment to be soaked if necessary to ensure thorough rinse.

Step #4--Tap Water Rinse (Optional)
- Skip if skipped Step #3.

Step #5--Deionized Water Rinse

Step #6--Solvent Rinse
- Rinse twice for field decontamination operations.

Step #7--Air Dry For 24-Hours & Aluminum Foil Wrap
- If 24-air dry not practical, rinse thoroughly with organic-free water and allow to air dry as long as possible. If organic-free water is not available, do not rinse with deionized or distilled water.

Step #8--Tap Water Rinse
- Rinse thoroughly in field as soon as possible after use.

Figure 2-2

DAILY REPORT

J.A. JONES
ENVIRONMENTAL
SERVICES

SITE NAME: Delivery Order 050, RAC Action for Statement of Work Design, Tank Farm C, MCAS, Cherry Point, NC			
CONTRACT: N62470-93-D-3033	DAY:	DATE:	WEATHER:

PERSONNEL

NAME	POSITION	NUMBER	HOURS	S. T.	O. T.

EQUIPMENT	SIZE/SPEC	NUMBER	SAMPLING EQUIPMENT	NUMBER	VEHICLE	NUMBER	MILES
Air Compressor			Hand Augers				
Backhoe			S.S. Scoops		Car		
Loader			Sample Jars (16 oz.)		Pick-Up Truck		
Excavator			Sample Jars (32 oz.)		Van		
Plate Compactor			40 Mil Vials		2-Ton Flatbed		
Jumping Jack			Disposable Bailers		2-Ton Dumptruck		
Cutoff Saw			D.I. Water		2-Ton Boxtruck		
Jackhammer			Silastic Tubing		10 Ton Trailer		
Air Nibbler			Tedlar Bags		14' Utility Trailer		
Air Sawzall			Teflon Bags		17' Cargo Trailer		
2" Centrifugal Pump			Teflon Tubing		21' Cargo Trailer		
2" Diaphragm Pump			Vac Jar Sampling Kit				
1" Diaphragm Pump			Cooler				
Peristaltic Pump			Ice				
Purge Pump			Shipping		MISC.SUPPLIES	SIZE/SPEC	NUMBER
Pressure Washer							
L.E.L. / Oxygen Meter			EXPENDABLES				
OVA / FID			Absorbent Pads				
Photovac / PID			Visqueen				
Gas Chromatagraph			Tyvek Suits				
Field Meter Kit			Saran Suits				
Data Logger			Sample Gloves				
Draeger Tubes			Nitrile Gloves				
Survey Set			Cloth Gloves				
Barricades			PVC Gloves				
			Rain Suits				
Street Saw			PVC Booties				
Generator			Rubber Boots				
Cellular Telephone			Face Shields				
			55 Gal. Drums				
			Non-Haz Labels				
			Haz- Labels				
			Caution Tape				
			Ear Plugs				
			Cuttoffsaw Blades				
			Geotextile Cloth				

Figure 2-2 (Continued)

DAILY REPORT

PROGRESS

SUB-CONTRACTORS AND / OR MATERIAL DELIVERED

SITE VISITORS AND ITEMS DISCUSSED

SAFETY MEETING SUBJECTS

JAJESC REPRESENTATIVE SIGNATURE: _____

SECTION 3.0

WASTE STREAM MANAGEMENT PLAN

All construction materials brought on site will be handled and stored according to the manufacturer's recommendations to prevent damage from weather and moisture.

Excavated soil from the pipe trench excavations will be placed on plastic sheeting near the trench excavation areas as depicted in **Figures C-5** and **C-15**, in accordance with approval from the ROICC. To evaluate the proper disposal requirements, a composite soil sample consisting of six grabs will be collected every 200 cubic yards.

Excavated soil will be field screened and analyzed in accordance with requirements provided in **Section 2.1 Chemical Sampling and Analytical Testing**.

In addition, a sample of the development water from the horizontal wells will be collected, delivered to a State approved laboratory, and analyzed for the disposal parameters provided in **Section 2.1.1.1 Sampling Strategy**. The development water will be properly containerized in a Frac tank and transported to a treatment or recycling facility permitted to accept petroleum-impacted groundwater, or delivered to an on site operational groundwater recovery and treatment system.

All required transportation manifests will be prepared by J.A. Jones Environmental and signed by a MCAS EAD representative. The EAD is responsible for all wastes generated at Cherry Point. J.A. Jones Environmental will coordinate with the AROICC, Ms. Karen Boyd, to obtain the necessary signatures.

3.1 WASTE STREAMS

Wastes will be handled and disposed of in accordance with regulations established by the NCDEHNR. The regulations for petroleum-impacted soils are summarized in the publication *Groundwater Section Guidelines for the Investigation and Remediation of Soils and Groundwater.*

Wastes will be segregated into the approximate waste streams as identified in **Table 3-1**. Based on assessment data for the site, the work is expected to involve materials contaminated only with petroleum constituents at non-hazardous levels. Petroleum-contaminated wastes under NCDEHNR guidelines are designated non-hazardous wastes and will be handled accordingly. In the event analytical data from characterization procedures for special wastes indicate contaminants at hazardous levels (i.e., per criteria for hazardous wastes as established in 40 CFR 261), the waste will be considered a separate waste stream and handled in accordance with requirements for hazardous wastes.

J.A. Jones Environmental will notify both the ROICC and EAD personnel immediately in the event that the waste is shown to be hazardous.

3.2 WASTE CHARACTERIZATION

Waste characterization will be completed for specific waste streams as identified in **Table 3-1**. Some waste streams (i.e., general construction refuse, general demolition debris, and metallic debris) will be common solid waste streams and as such will not require waste characterization.

Waste characterization will involve completion of written documentation describing the wastes. At a minimum, written documentation for waste characterization will include the following:

- Generator information (include name, address, contact, and phone number);
- Site name (include street/mailing address);
- Activity generating waste (i.e., tank removal, excavation, treatment system operation, etc.);
- Source of contamination (i.e., storage tanks, pipeline, etc.);
- Historical chemical use for area (i.e., gasoline, leaded gasoline, diesel, JP-4, etc.);
- Physical state of waste (i.e. solid, liquid, solid with free liquids, etc.); and,
- Copies of all analytical data for waste.

Waste characterization data will typically be completed on a form provided by the disposal facility. At a minimum, supporting analytical data will be from sampling completed in accordance with NCDEHNR requirements for non-hazardous wastes. See **Section 2.0 Sampling and Analysis Plan** for sampling and analysis to be completed for wastes. In some cases, specific disposal facilities may require additional sampling and analysis. Generator certification and signature, if required, will be by EAD personnel only. An approved (and signed by a representative of the disposal facility) copy of the waste characterization form will be received prior to transportation of any waste to the disposal facility.

3.3 DISPOSAL OF WASTE STREAMS

Waste streams will be disposed of as identified in **Table 3-1**. The preferred disposal method, whenever feasible, will be by a material recovery facility (i.e., recycling, bioremediation, treatment, etc.) in lieu of landfilling.

On site disposal of liquids and solids may be completed for some wastes under some circumstances as identified in **Table 3-1**. Specifically, free product collection and transportation will be handled by J.A. Jones Environmental; collection and disposal of the free product at an acceptable facility will be the responsibility of the Air Station. Uncontaminated water (i.e. water only with no product or visible sheen) may be disposed

of in the immediate vicinity of the source of water if water readily infiltrates the local ground surface (i.e. infiltrates with no ponding, no run-off to surface water courses, and no run-off to storm drains or sanitary sewers). However, the MCAS EAD preferred method of disposal is collection and disposal of the uncontaminated water at the Industrial Waste Water Plant with prior approval/permission of Facilities Maintenance. In order for the uncontaminated water to be accepted at this Plant, a profile of the waste stream is required

- For off site disposal facilities for non-hazardous solids, a copy of documentation indicating the facility as a NCDEHNR-permitted facility for the disposal/recovery of petroleum-contaminated special waste

- For off site disposal facilities for bulk soil, compliance with the quarantine regulations associated with the imported fire ant as it applies to Craven County, NC, as set forth in USDA Quarantine No. 81 dated 9 October 1970, and USDA Publication No. 301.81-2A dated 23 July 1976, is required.

- For off site disposal facilities for non-hazardous water, a copy of documentation indicating the National Pollutant Discharge Elimination System (NPDES) permit number or pre-treatment permit number

- For hazardous wastes, a copy of documentation indicating a permit in accordance with 40 CFR 264

The disposal facility will be responsible for providing a copy of the final waste manifest and for providing a certificate of disposal for each load of waste received. J.A. Jones Environmental will be responsible for ensuring hazardous waste documentation from the disposal facility is returned in a timely manner in accordance with 40 CFR 264.71.

3.4 HANDLING AND TRANSPORTATION OF WASTE STREAMS

3.4.1 Temporary Storage

Wastes will be securely stored on site prior to transportation and disposal. Storage containers and stockpiles will be clearly labeled prior to placement of any waste. Labels will indicate the material to be a "Non-Hazardous Waste" (unless analytical data indicate it to be hazardous) and include the site name, media (soil/groundwater), well number, date waste was initially placed, Contractor Name (optional), description of the waste, and if empty, labeled as such. Wastes will typically be stored as follows:

- Roll-offs for solids and debris will be provided with covers and disposable liners. Roll-offs will be inspected upon arrival on site and any roll-off arriving on site with contents will be rejected. Roll-offs will be maintained with covers in-place as much as possible with all covers securely fastened at the end of each work day. Liners will be disposed of as contaminated debris. Roll-offs will be inspected by the transporter after removal of the liner and decontaminated (either by the transporter at the point of disposal or by returning the roll-off to the site for decontamination) in the event of evidence of liner failure.

- Stockpiles for solids and debris will be provided with liner, cover, and perimeter berm. Liner will be a minimum of two 6-mil polyethylene sheets. Cover will be a minimum of one 6-mil polyethylene sheet. The perimeter berm (typically hay bales placed beneath the liner) will be constructed to allow for collection of any free liquids draining from the stockpile. Covers and perimeter berms will be maintained in-place as much as possible with all covers and berms secured at the end of each work day. Construction materials for the stockpiles which contact waste will be disposed as contaminated debris. Vehicles transporting stockpiled material will be decontaminated (either by the transporter at the point of disposal or by returning to the site for decontamination) following the final load for each vehicle for each work day.

- Drums for solids and liquids will be arranged in an orderly fashion and stored in a single on site area whenever possible. Each drum will be provided with its own label. Drums will remain covered as much as possible; all covers will be properly secured at the end of each work day. Drums will be disposed with contents. If contents are bulked for transportation and disposal, drums will be decontaminated prior to re-use or before leaving the site.

- Storage tanks with securable covers will be provided for bulk liquid storage. Tanks will be inspected upon arrival on site and any tank arriving on site with contents will be rejected. Tanks will be decontaminated prior to leaving the site. Typically, decontamination will occur immediately following emptying of the tank with decontamination fluids disposed of with the waste. Vehicles transporting bulk waste liquids will be decontaminated (either by the transporter at the point of disposal with decontamination fluids disposed with the waste or by returning to the site for decontamination) following the final load for each vehicle for each work day.

Containers will be inventoried the day of arrival on site using the Transportation & Disposal Log provided on **Figure 3-1**. Containers and stockpiles will be visually inspected on a daily basis with prompt response taken in the event of any evidence of failure to contain the wastes. Decontamination of containers/vehicles will be per procedures established in **Section 5.10 Decontamination**. Decontamination of containers/vehicles completed at the point of disposal will be documented by the transporter on the final manifest for the waste. Decontamination of containers/vehicles completed by returning to the site after disposal will be documented on the Daily

Production Report. Containers and stockpiles will typically be managed so that wastes are stored on site for less than 45 days in accordance with North Carolina guidance documents. In the event that wastes are hazardous, wastes will be stored and handled in accordance with MCAS EAD direction and applicable State and Federal regulations.

3.4.2 Transportation of Waste Streams

Each load of waste will be manifested prior to leaving the site. The manifest form (with multiple carbon copies) will typically be provided by the transporter for the waste and accompany the waste to its final destination. The manifest form will typically identify the waste as non-hazardous. If the waste is hazardous, the manifesting will be completed in accordance with 40 CFR 262 and MCAS EAD direction (manifesting of hazardous wastes will be completed by personnel certified with the USDOT for manifesting hazardous materials). All manifests will be signed by MCAS EAD personnel only. At a minimum, the manifest form will include the following information:

- Transporter information (include name, address, contact and phone number);
- Generator information (include name, address, contact, and phone number);
- Site name (include street/mailing address);
- Description of waste (include reference to characterization form if available);
- Type of container; and,
- Quantity of waste (volumetric estimate).

Transportation of non-hazardous wastes will be performed by a transporter licensed with the NCDOT for commercial transportation. In the event wastes are hazardous, its transport will be completed by a transporter licensed in accordance with 40 CFR 263 and 49 CFR 171-179. A copy of documentation indicating that the transporter has appropriate licenses will be received from the transporter prior to transport of any waste by the transporter. The transporter will be responsible for weighing loads by a scale certified by the North Carolina Department of Commerce, Bureau of Weights and Measures. Weights will be taken for the full and empty containers (or dump truck or tanker truck) for each load. Disposal quantities will be based on the difference of weights of the full and empty containers (or dump truck or tanker truck). Weights will be denoted on the waste manifest. Copies of weight tickets will be provided by the transporter with the final manifest.

Transportation of wastes will inventoried the day of transportation from the site using the Transportation & Disposal Log provided as **Figure 3-1**. A carbon copy of the initial manifest form for each load will be retained on site and attached to the Daily Production Report.

3.5 DOCUMENTATION OF WASTE STREAMS

Documentation of waste streams will be completed as discussed in the preceding sections and summarized in **Table 3-2**.

Tab. 3-1
Summary of Waste Streams

RAC Action for Statement of Work Design
Tank Farm C
Marine Corps Air Station
Cherry Point, North Carolina

Waste Stream ID	Description	Disposition	Char. Form Required
A General Construction Refuse	General debris and rubbish including field office generated refuse, material shipping containers and packing, discarded temporary facilities, and waste construction materials.	Sanitary Landfill	No
B General Construction Debris	Non-metallic debris generated by demolition of existing facilities including pavement, masonry, wood, insulation, and other materials of construction.	Sanitary Landfill or C&D Landfill	No
C Metallic Debris	Ferrous and non-ferrous metals generated by demolition which can be feasibly segregated from general demolition debris. To include cleaned vessels and piping resulting from tank removal operations and decontaminated drums.	Metals Recycler	No
D Contaminated Soil	Soil removed from areas of known contamination or suspected contamination based on field observations. To include excess soils generated from exploratory borings and miscellaneous excavations.	Materials Recovery Facility or Local Backfill	Yes
E Contaminated Water	Water removed from areas of known contamination or suspected contamination based on field observations. To include water generated by well development and purging, decontamination operations, and excavation dewatering.	Materials Recovery Facility or Treatment by Marine Corps Air Station	Yes

Tab. 3-1
Summary of Waste Streams

RAC Action for Statement of Work Design
Tank Farm C
Marine Corps Air Station
Cherry Point, North Carolina

Waste Stream ID	Description	Disposition	Char. Form Required
F Contaminated Debris	General construction refuse and demolition debris which has contacted contaminated soil/water or product. To include personal protective equipment and disposable sampling equipment.	Sanitary Landfill	Yes
G Recovered Free Product	Free Product recovered from the subsurface.	Marine Corps Air Station will pump and dispose	Yes
H Recovered Vessel Sediments/Sludge	Solids and sludges removed from tanks. To include material recovered from ancillary vessels, sumps, and piping.	Sanitary Landfill	Yes
I Treatment Sediments/Sludges	Miscellaneous solids and sludges associated with maintenance of treatment systems. To include residuals from holding tanks, etc.	Sanitary Landfill	Yes
J Hazardous Wastes	Wastes from any waste stream determined to be hazardous per 40 CFR 261 criteria based on analytical results.	RCRA Facility	Yes

Notes: C&D Landfill-Construction/Demolition/Debris Landfill

Local Infiltration-Discharge of water (i.e. no product or visible sheen) in immediate vicinity of source of water at a rate such that water quickly infiltrates the local ground surface (i.e. no ponding, no run-off to storm drains or sanitary sewers).

Local Backfill-Backfill on site as clean fill. Soil must be below the Site Sensitivity Evaluation.

Metals Recycler-Facility that routinely accepts scrap metals for the purpose of reuse/recycle of the metal

Table 3-2
Summary of Waste Stream Documentation

RAC Action for Statement of Work Design
Tank Farm C
Marine Corps Air Station
Cherry Point, North Carolina

Item	Reference Section	Responsible Party
Disposal Facility Permit	3.3	Disposal Facility
Waste Characterization Form	3.2	Complete - J.A. Jones Environmental Certify - MCAS EAD Approve - Disposal Facility
Transporter's License	3.4.2	Transporter
Initial Waste Manifest	3.4.2	Complete - J.A. Jones (non-hazardous) Complete - Transporter (hazardous) Sign/Certify - MCAS EAD
Weigh Tickets	3.4.2	Transporter
Final Waste Manifest	3.3	Disposal Facility
Certificates of Disposal	3.3	Disposal Facility
Transportation & Disposal Log	3.4.1, 3.4.2	J.A. Jones Environmental

Figure 3-1
Transportation & Disposal Log
RAC Action for Statement of Work Design
Tank Farm C, MCAS, Cherry Point, NC

Load	Container			Waste Stream	Transportation & Disposal					
Load Number	Arrival Date	Serial/License No.	Type	ID & Description	Transport Date	Manifest No.	Quantity (& Units)	Hauler	Disposal Facility	Comments

Waste Stream	Total by Type

SECTION 4.0

ENVIRONMENTAL PROTECTION PLAN

4.1 INTRODUCTION

The work to be performed at the site will incorporate features to protect the environment during the treatment system installation activities. All work will be performed in a manner which meets the intent of federal, state, and local regulations designed to protect the environment.

4.2 EROSION AND SEDIMENT CONTROL

Pipe trench excavations will be completed in a manner which complies with the intent of North Carolina State Erosion and Sediment Control Regulations. An Erosion and Sediment Control Plan is presented in **Appendix B**. Drawing details required as part of the development of the Erosion and Sediment Control Plan are included in the design drawings on **Figure C-15**. Erosion and sediment control features are limited due to the nature and scope of work, and the relatively flat topography at the facility. Soil removed during pipe trenching activities will be screened with a FID and placed on plastic sheeting near the trench excavation areas as depicted in **Figure C-5**, or as located by the ROICC. The temporary containment of excavated soil detail shows a method for the temporary containment of excavated soil in the event soil material is left on site overnight. The figure depicts the use of straw bails around the perimeter and plastic sheeting underneath and covering the stockpile. Petroleum-impacted soil from the installation of the horizontal wells will be loaded directly into an on site container, sampled to evaluate disposal requirements, and hauled to a treatment or recycling facility permitted to accept the material. If laboratory results for TPH analyses are less than 10 mg/kg using USEPA Method 5030/Modified 8015, 40 mg/kg using USEPA Method 3550/Modified 8015, or 250 mg/kg as oil and grease using USEPA Method 9071, the material can be used for fill material.

To prevent the migration of dust and debris from the excavation areas and to limit stormwater runoff from entering or eroding the pipe trench excavations, silt fences will be constructed around the sides of the pipe trench excavation areas. A diagram of the staked silt fence detail is provided in **Figure C-15**. Once the pipe trench excavations are completed, the areas will be filled with the appropriate material specified in the Technical Specifications and design drawings; and the areas will be regraded, mulched, and seeded; or compacted and repaved with asphalt or concrete as required.

4.3 EXCESS SOIL TREATMENT AND DISPOSAL

Trenching will generate excess soils and this excess soil will be segregated, stockpiled and tested for the contaminants of concern at the site in accordance with **Section 2.0 Sampling and Analysis Plan**. Soils, which by analysis, contain levels of contamination in excess of 10 mg/kg using USEPA Method 5030/Modified 8015, 40 mg/kg using USEPA Method 3550/Modified 8015, or 250 mg/kg as oil and grease using USEPA Method 9071, will be sent to a state permitted soil recycling facility. Soil with TPH analysis results less than these levels will be suitable for use as backfill material per North Carolina guidelines.

4.4 CONSTRUCTION DEBRIS

Construction activities will generate a small quantity of debris including asphalt and packaging materials. These materials will be collected daily, segregated, containerized, and hauled to a facility licensed to accept construction debris.

4.5 AIR POLLUTION CONTROL

The air discharge permits for the vapor extraction systems should not be required under NC TAPS rules. Air discharges from the vapor extraction systems will be to the outside air. However, as discussed in **Section 2.1.1.1 Sampling Strategy**, the effluent vapor will be sampled and analyzed using USEPA Method 18.

4.6 DUST CONTROL

Pipe trench excavation activities will be performed in a manner which limits blowing dust and tracking of mud onto the site access roads. Potential dust control measures that will be employed when appropriate include water spray, sweeping, or covering with plastic sheeting. Access roads will be swept or washed periodically when construction activities track mud and dust material onto road surfaces.

4.7 SPILL CONTAINMENT

Due to the nature of the site activities, the risk of accidental fuel or oil spills is minimal. Heavy machinery used on site will be in good working condition and will be inspected periodically during site work. If significant oil or fuel leaks develop from machinery, J.A. Jones will arrange for the prompt repair or replacement of the equipment. J.A. Jones does not anticipate the need for on site fueling of the construction equipment during the execution of this Delivery Order. However, if required, fuel for the construction equipment will be provided in a bermed or diked fuel storage tank of less than 500 gallon capacity.

Facilities and materials will be provided and stored at the site to minimize the environmental impact of accidental fuel or oil spills during construction activities. Sacks of petroleum/oil absorbent material will be provided and will be stored in the project trailer for accidental spills of fuel oil or hydraulic line failures. Spill prevention measures shall include berms and storage containers in order to prevent spills to the environment.

In the event of a spill, cleanup will commence immediately. All contaminated materials generated by the cleanup efforts will be packaged and disposed of in accordance with applicable federal, state, and local regulations. A Spill Report form as presented in **Figure 5-14** will be completed by the Site Superintendent, and will be submitted to MCAS EAD through the ROICC with 24 hours of the spill occurrence.

4.8 ENVIRONMENTAL CONDITIONS REPORT

J.A. Jones and the ROICC will conduct an environmental conditions survey prior to the commencement of construction. Photographs of the pre-construction condition of the facilities, including grassy areas, trees, shrubs, paving, gutters, curbs, buildings, and facilities, will be taken. A written report describing the pre-construction condition of the project site, including copies of the photographs and comments on the condition of existing paved areas, will be submitted to the ROICC within two weeks from the construction start date.

4.9 HAZARDOUS MATERIALS

If required, hazardous materials brought on site for construction will be handled in a manner that minimizes the risk of personnel and property damage. A file will be kept at the job trailer with all Material Safety Data Sheets (MSDS) for all materials that are used on site during construction. A chart will be submitted at the beginning and end of construction which summarizes material with MSDS sheets, amount, and application. Upon completion of construction all MSDS sheets for materials that will still be used on site will be submitted to the EAD, including information on the volume of each material remaining.

SECTION 5.0

SITE HEALTH AND SAFETY PLAN

5.1 INTRODUCTION

J.A. Jones is submitting this Site Health and Safety Plan for the installation and subsequent operation and maintenance activities associated with the soil and groundwater treatment system at Tank Farm C located on the Marine Corps Air Station, Cherry Point, North Carolina. This SHSP contains procedures and protocols pertaining to personnel and public health and safety issues at the site. It is through the implementation of this Plan, along with J.A. Jones' overall Health and Safety Program, that site hazards and risks with regard to remediation activities will be controlled and minimized.

I hereby certify the SHSP shown and marked in this submittal is that proposed to be incorporated into LANTDIV RAC Contract No. N62470-93-D-3033 is in compliance with the Contract Specifications, and is submitted for government approval. Government approval of any proposed variation is recommended.

Certified by CIH _____, Date _____
(C. Myers, CIH)

5.1.1 Health and Safety Program Maintenance

J.A. Jones recognizes that health and safety concerns continually change at sites. Therefore, this Plan will be reviewed periodically and otherwise as needed. At this time, the Site Health and Safety Officer (SHSO) will conduct a safety audit to check SHSP compliance, and to see if the SHSP requires additional revisions. Additionally, in the event of an emergency response, the response will be evaluated as to its effectiveness; and revisions to the Contingency Plan will be made, if necessary.

5.1.2 Plan Acceptance

All personnel, subcontractors, and others engaged in site activities will be required to review this Plan prior to the commencement of work. These individuals will be required to sign their name, indicating that they have read this Plan and will comply with the rules, practices, and procedures contained herein. The Health and Safety Plan Acceptance form is included here as **Figure 5-1**.

5.1.3 References

The following documents were used as references in the preparation of this SHSP:

- Standard First Aid Manual, American Red Cross
- OSHA Safety and Health Standards, 29 CFR 1910 and 1926 (specifically 1910.120)
- Occupational Safety and Health Guidance Manual for Hazardous Waste Site Activities, National Institute of Occupational Safety and Health (NIOSH)/OSHA/United States Coast Guard/USEPA
- A Guide to Industrial Respiratory Protection, NIOSH
- Standard Operating Safety Guides, USEPA
- Occupational Health Guidelines for Chemical Hazards, NIOSH/OSHA
- Threshold Limit Values and Biological Exposure Indices, American Conference of Governmental Industrial Hygienists (ACGIH)
- Safety and Health Requirements Manual, EM-385-1-1, September 1996, US Army Corps of Engineers
- Hazardous Chemicals Desk Reference, Third Edition, Van Nostrand-Reinhold
- J.A. Jones Safety Procedures and Programs Manual, (Contract N62470-93-D-3033, POL Remedial Action Contract)

5.1.4 Site History and Description

Tank Farm C is the site of a refueling facility for white fleet vehicles and is located north of the intersection of "A" Street and Curtiss Road. Petroleum-impacted soil and groundwater present at the site were suspected to be caused by a release of gasoline and diesel fuel from active gasoline and diesel USTs Tank 1, Tank 2, and Tank 3 located in the northern region of Tank Farm C, and eleven former gasoline USTs, which were removed from the eastern and southern regions of Tank Farm C.

The Drawings in **Section 8.0 Contractor Generated Construction Drawings**, illustrate the work areas, decontamination areas, the location of the soil and groundwater treatment system, and the location(s) of temporary facilities, which will house safety equipment. Construction activities at the site are anticipated to last from the initial start of work approximately twenty weeks.

5.2 SITE HEALTH AND SAFETY PERSONNEL

Site safety is accomplished through an integrated team effort. The health and safety personnel, supervisors, site workers and administrative team perform essential safety roles.

5.2.1 Certified Industrial Hygienist

The Certified Industrial Hygienist (CIH) for the POL Remediation at the Cherry Point, Marine Corps Air Station is Mr. Charles J. Myers. Mr. Myers possesses the necessary experience in the health and safety aspects of remedial action projects. He will oversee the health and safety program and be available for consultation when required; however, he will not be required to be on site.

5.2.2 Site Health and Safety Officer

Aspects of site health and safety are the responsibility of the SHSO. Mr. Richard Johnson, J.A. Jones' Project Superintendent, will be the SHSO. Mr. Johnson and one additional site worker will be trained in standard first aid and Cardiopulmonary Resuscitation (CPR). All training certificates and certifications will be retained at the site during the project. The SHSO possesses demonstrable experience and specialized training in personal protective equipment program implementation. Furthermore, he has experience in the proper use of air monitoring instrumentation and sampling procedures specific to activities to be performed at the site. The SHSO will be on site when work is in progress.

Mr. Johnson will contact the MCAS Fire Station (911), Project Manager's Office, and ambulance services, as well as the nearest poison control center. He will communicate to these agencies the following information: type of work being conducted, potential health and safety hazards present at the site, and duration of the project.

The Project Superintendent/SHSO will be in direct communication with the On-Scene Coordinator (OSC), who is the primary contact in an emergency situation. The Project Superintendent will also be in contact with the Local Emergency Planning Committee (LEPC); ROICC; Construction Representative (ConRep); J.A. Jones personnel; and other site workers. It will be the Project Superintendent/SHSO's responsibility to coordinate with these individuals regarding the health and safety aspects of the petroleum contaminated soil and groundwater remediation activities.

5.2.3 Site Labor Forces

Site labor forces will be comprised of personnel who possess the appropriate training and experience to work at a remedial site (40-Hour Training and/or current 8-Hour Refresher Training, Supervisory Training, Standard First Aid, CPR, etc.). Proper documentation of prior field experience for all site workers will be retained at the site.

5.3 TRAINING REQUIREMENTS

5.3.1 OSHA 1910.120 Training

Personnel working in the remediation system area will have completed the 40-hour health and safety training and/or 8-Hour Refresher Training as required by the OSHA regulations, 29 CFR 1910.120. The SHSO will have completed the required additional eight hours of specialized supervisor training. Visitors and workers on site for a limited duration who are not expected to be exposed to hazardous substances and/or potential health and safety hazards for more than 30 days per year will not be required to have the health and safety training. Individuals responsible for pickup and delivery will also not be required to have the health and safety training. However, their activities will be monitored by an individual with health and safety training. J.A. Jones will maintain a record of the training history for on site personnel, a log of visitors to the site, including name, date, activities conducted, and the health and safety documentation during project activities. **Figure 5-2** shows the proposed standard form for a sign-in and sign-out procedure used during site activities.

5.3.2 Site-Specific Training

The SHSO will provide site-specific training to site personnel involved in the remediation activities. The training will address potential hazards found at the work sites and safety measures that must be followed on certain areas of the site where health and potential safety hazards may exist. Training will include discussion of general site conditions and general procedures regarding the buddy system, fire prevention/suppression techniques, levels of protection, overexposure to chemical hazards, and air monitoring. Recognition of the potential safety and health hazards will be emphasized during the site-specific training meetings.

5.3.3 Daily Safety Meeting

Project personnel will be given briefings by the SHSO on a daily or as needed basis determined by the SHSO. These daily meetings will further assist site personnel in conducting their activities in a safe manner and recognizing potential risks at the work sites. Daily safety meetings will provide workers with information concerning new operations, necessary changes in work practices, or changes in the site or environmental conditions. Briefings will also be given to facilitate conformance to prescribed safety practices when performance deficiencies are identified during routine, daily activities or

as a result of safety audits. Workers will be given the opportunity to communicate health and safety concerns to the SHSO. It will be the responsibility of the SHSO to investigate and/or address workers concerns. **Figure 5-3** presents the form to record daily pre-planning activities, heath and safety activities, and events and issues discussed during the daily safety meeting. A copy of the completed form will be attached to the Daily Report.

5.3.4 Emergency First Aid Training

The SHSO will be trained in American Red Cross Standard First Aid and CPR. This training has been required, so that in the event of an emergency or other incident, primary care can be given to an individual in need before professional response providers arrive on site.

5.3.5 Spill Response Training

Site personnel will be trained to respond to spills at the site. The SHSO will offer this training during the site-specific training. The training will range from awareness of spill potential to responding to spill situations. The personnel will learn how to prevent spills from occurring, how to look for and identify spills, and the location and proper use of the portable spill contaminant kit. Specifically, spill response training will include the following:

- Spills will be reported to the MCAS Fire Station (911) immediately;
- Control of an area where a spill has occurred including setup of barriers to keep personnel not involved in cleanup efforts out of the area;
- Training in the proper use of sorbent, and other cleanup materials; and
- Training in the proper notification and documentation of a spill occurrence to include completion of the Spill Report form as illustrated in **Figure 5-14** of this Plan.

The portable spill containment kit will include absorbent pads and vermiculite. In the occurrence of a spill, these materials will be used to contain and clean up the spill. Once used, these materials will be containerized and disposed of at a facility licensed to accept such contaminated material.

Spills associated with motorized construction vehicles will most likely be fuel spills, oil leaks, or hydraulic fluid leaks. All equipment will be inspected on a regular basis to ensure that all seals are tight and no hoses have the potential to leak. Caution will be taken to ensure that no fuel is spilled during refueling of the vehicle. If any of the above should occur, the area will be cleaned up and reported as discussed in **Section 5.7** of this Plan.

In addition, the potential exists for contaminated groundwater to spill during the start-up and testing of the soil and groundwater treatment system. If any spillage occurs because of this work, the spill will be contained immediately and reported as discussed in **Section 5.7** of this Plan. Water generated during testing of equipment will be minimal and will be

contained in the 500-gallon vertical polyethylene storage tank.

The spill prevention training will significantly reduce the potential of any spill to occur during construction at this site. The training will be modified, as necessary, during construction to meet any different potential spill problems. This implementation and periodic review will result in a safe work area and minimize potential environmental impacts.

5.4 MEDICAL SURVEILLANCE PROGRAM

5.4.1 Personnel Screening

All employees who are potentially exposed to hazardous substances or health hazards and/or wear a respirator are to receive an annual medical examination conducted by a licensed physician, including the completion of a medical and work history. In addition, any worker exhibiting symptoms relating to extreme heat/cold stress or other work related physical disorder will be examined by a licensed occupational physician as soon as practicable upon exhibiting these symptoms. An accurate record of the medical surveillance and health and safety training will be retained by J.A. Jones (in accordance with 29 CFR 1910.120). Additionally, a copy of each worker examination will include the following minimum medical requirements:

- Complete medical and work histories; Physical examination
- Pulmonary function tests
- Chest X-Ray (frequency to be determined by physician)
- Eye examination
- Audiometer
- Urinalysis

If the employee passes the physical he/she will be categorized as fit-for-duty and able to wear respiratory protection. A copy of the occupational physician's letter, stating that the employee is fit-for-duty, will be retained at the site throughout the project. The SHSO will fit test site personnel to ensure proper fit of respirators.

5.4.2 Site Medical Surveillance

The SHSO will verify that safe working conditions are being maintained when temperatures reach extremes (90°F and 20°F, respectively). Criteria for implementing such measures is found in **Section 5.11.5.2 Heat/Cold Stress** of this Plan. Workers will be given rest periods (implemented by the SHSO using ACGIH's work rest regime for extreme temperatures) and fluids when conditions warrant such action. The SHSO will discuss these measures with the site workers at the site-specific training. In addition to this site medical surveillance, the SHSO will require all site workers to complete an Employee Medical Authorization/Data Sheet, provided as **Figure 5-4**. This form will assist physicians in evaluating the site worker in an emergency situation. It will be sent

with the worker in such an emergency and/or forwarded to a local emergency facility if directed. To prevent further similar accidents a Lost Time Injury, Accident Investigation Written Statement, Contractor Significant Incident, and Accident Investigation Photo Log Report forms, **Figures 5-5** through **5-8,** will be completed by the SHSO.

5.5 WORK ACTIVITIES

Listed below are the work activities to be conducted by J.A. Jones personnel at the site (anticipated order of completion). Potential health and safety hazards related to these activities are found in **Sections 5.6 Potential Health Hazards** and **5.7 Potential Safety Hazards** of this Plan, respectively. The J.A. Jones work activities regarding remediation of petroleum contaminated soil and groundwater are as follows:

- Mobilization/Construct Temporary Facilities
- Surface Water Control
- Horizontal Well Installation
- Hand Excavation Near Utilities
- Machine Excavation and Backfilling
- Treatment System Installation
- Pipe Trenching
- Treatment System Connections
- Soil/Water Sampling
- Site Restoration
- Operation and Maintenance
- Demobilization

5.6 POTENTIAL HEALTH HAZARDS

The following section outlines the primary potential health hazards that have been identified at the subject facility. Subsequent sections outline the potential for exposure to the known contaminants during each of the site activities. During on site safety/pre-construction briefings, particular attention will be paid to the potential health hazards associated with the activities conducted at the site. These hazards will be reaffirmed in the daily safety meetings. The following provides a list of the primary potential health hazards identified in the Corrective Action Plan prepared by RC&A. Groundwater samples collected at the site revealed maximum groundwater contamination as follows.

Groundwater Constituent	Maximum Detected Concentration	Site Rehabilitation Concentration
Benzene	12,700 µg/l	1 µg/l
Toluene	12,400 µg/l	1,000 µg/l
Ethylbenzene	9,880 µg/l	29 µg/l
Total Xylenes	27,700 µg/l	530 µg/l
1,2-Dichloropropane	0.8 µg/l	0.56 µg/l

Groundwater Constituent	Maximum Detected Concentration	Site Rehabilitation Concentration
1,2-Dichloroethane	5.1 µg/l	0.38 µg/l
Chloroform	2.9 µg/l	0.19 µg/l

Based on these findings, contaminants at these work sites are expected to be petroleum hydrocarbons, and more specifically gasoline and diesel fuel, and should not pose a significant health risk from vapor inhalation unless disturbed during construction. However, if air monitoring equipment reveals that vapor concentrations pose a risk, the SHSO will require the use of appropriate equipment and safety measures. Based on these findings, monitoring of organic vapors during the soil excavation will be conducted as outlined in **Section 5.8.1**. Material Safety Data Sheets supplying the chemical and physical properties of the known site contaminants are provided in **Appendix D Chemical and Physical Properties of Known Site Contaminants**.

SOIL STOCKPILE MAINTENANCE

Suspected contaminated soil will be staged at an area designated by the United States Navy (USN). The location of the soil staging area is provided on **Figure C-5**. The soil will be placed on and covered with ultraviolet-resistant polyethylene sheeting, and the cover will be secured.

5.6.1 Mobilization/Construct Temporary Facilities

During the mobilization phase of each project, site personnel will not be exposed to contaminated soil or groundwater. No chemicals and/or other substances are expected to be used during this phase of the project. Respiratory protective equipment and air monitoring will not be required during this phase of the project.

5.6.2 Surface Water Control

The surface water control portion of the work will involve the placement of silt fence around excavation and trench areas. Workers are not expected to encounter significant petroleum-impacted material during fence placement. As a result, air monitoring will not be performed during this phase of the project.

5.6.3 Horizontal Well Installation

Horizontal air sparge, biosparge, free product vapor extraction, and soil vapor extraction wells will be installed at the site. Site workers will not enter any trench over three feet in depth without the required benching, shoring and/or sheeting in accordance with Subpart P, Appendix B, 29 CFR 1926; and/or Section 25.D of EM 385 1-1, dtd 3 September 1996, U.S. Army Corps of Engineers Safety and Health Requirements Manual, respectively. Drill cuttings from the horizontal well installation activities will be stockpiled as contaminated until laboratory analytical results are obtained. Compressed

air and vapor extraction piping will be installed from the sides of the trenches. Workers may be exposed to petroleum-impacted soil and groundwater during the horizontal well installation activities.

5.6.4 Hand Excavation Near Utilities

The majority of horizontal trenching will be performed with a backhoe to minimize employee contact with contaminated soils. However, near utilities and other obstructions, hand excavation may be necessary. Air monitoring will, however, be conducted periodically during excavation activities via a photoionization detector (PID). If organic vapors are present above the limits outlined in **Section 5.8.1 Health Hazard Protection**, workers will be required to don Level C PPE. Site-specific training will outline the importance of safe work practices during this phase of the project. Daily safety meetings will also reaffirm the proper excavation of potentially impacted soils. Should air monitoring results and/or site conditions warrant the upgrading of personal protection, the SHSO will implement such measures.

5.6.5 Machine Excavation and Backfilling

The potential exists for personnel to be exposed to petroleum-impacted soil. Machine operators will principally be involved in excavating activities and, therefore, will have adequate ventilation from potential health hazards. Personnel identified as spotters will use caution during operation of excavation and other heavy machinery. Periodic monitoring of organic vapors in the immediate proximity of machine operators and spotters will be conducted via a PID to verify that workers are not being exposed to organic vapor concentrations above those outlined in **Section 5.8.1 Health Hazard Protection**. In addition, whenever possible, machinery will be positioned such that workers may maintain a position upwind of the excavation. Site-specific training will outline the importance of safe work practices during this phase of the project. Should air monitoring results and/or site conditions warrant the upgrading of personal protection, the SHSO will implement such measures.

5.6.6 Treatment System Installation

No potential health hazards will be present during installation of the treatment system. The treatment system will be located in an area unaffected by petroleum contamination. The various trades involved with installation of the treatment system will not be trained in accordance with 29 CFR 1910.120. The treatment system will be installed on a concrete slab and secured by chain-link fencing.

5.6.7 Pipe Trenching

The majority of horizontal trenching will be performed with a backhoe to minimize employee contact with contaminated soils. However, near utilities and other obstructions, hand excavation may be necessary. Air monitoring will, however, be conducted

periodically during the excavation via a PID. If organic vapors are present above the limits outlined in **Section 5.8.1 Health Hazard Protection**, workers will be required to don Level C PPE. Site-specific training will outline the importance of safe work practices during this phase of the project. Daily safety meetings will also reaffirm the proper excavation of potentially impacted soils. Should air monitoring results and/or site conditions warrant the upgrading of personal protection, the SHSO will implement such measures.

Site workers will not enter any trench over three feet in depth without the required benching, shoring and/or sheeting in accordance with Subpart P, Appendix B, 29 CFR 1926; and/or Section 25.D of EM 385 1-1, dtd 3 September 1996, U.S. Army Corps of Engineers Safety and Health Requirements Manual, respectively.

5.6.8 Treatment System Connections

The treatment system connections will include establishing the appropriate piping and electrical connections to control panels and system components. Physical connections of the system piping to the treatment equipment components will be non-intrusive and should not present a situation in which site workers will be exposed to potential health hazards. Air monitoring will not be required during this phase of the site work.

5.6.9 Soil/Water Sampling

It is not expected that workers may be exposed to contaminated soils during sampling operations. However, protective gloves and booties will be worn during all sampling events. Air monitoring using a PID will also be conducted periodically during the excavation and sampling activities. Groundwater sampling will be performed in accordance with accepted sampling protocol. Protective gloves will be worn during all groundwater sampling events. If organic vapors are present above the limits outlined in **Section 5.8.1 Health Hazard Protection**, workers will be required to don Level C PPE. Site-specific training will outline the importance of safe work practices during this phase of the project. Daily safety meetings will also reaffirm the proper excavation of potentially impacted soils. Should air monitoring results and/or site conditions warrant the upgrading of personal protection, the SHSO will implement such measures.

5.6.10 Operation and Maintenance

During the operation phase of the project, site workers may contact petroleum-impacted groundwater when performing maintenance to physical treatment equipment and when sampling groundwater. Groundwater sampling will be performed in accordance with accepted sampling protocol outlined in **Section 2.0 Sampling and Analysis Plan**. Protective gloves will be worn during all groundwater sampling events.

5.6.11 Site Restoration and Demobilization

Site restoration and demobilization activities will be non-intrusive and should not present a situation in which site workers will be exposed to potential health hazards. Air monitoring will not be required during this phase of the project.

5.7 POTENTIAL SAFETY HAZARDS

The following sections outline the potential safety hazards associated with remediation activities at the site. Particular attention will be paid in the site-specific training to discussing the potential safety hazards associated with such activities. The potential safety hazards will be reaffirmed in the daily safety meetings.

SPECIAL SAFETY CONCERNS

Open Trenches and Excavations

Horizontal pipe trenches will exceed three feet in depth however personnel will not enter the trenches so shoring or sloping should not be necessary. When working around trenches and excavations, the safety procedures found in Section 6.04 of the *J.A. Jones Safety Programs and Procedures Manual* will be followed. A copy of the J.A. Jones "Excavation Permit" found in this same manual will be properly filled out if the excavation goes below four feet. The following precautions will be taken when in this environment:

- No open trenches will be left over the weekend, and if possible
- No open trenches will be left unsecured overnight
- All excavations work will proceed according to the requirements set forth in OSHA regulations 29 CFR 1926, SubPart P - Excavations
- Construction fencing and caution tape will be placed around the trench work area to restrict access to the immediate exclusion zone. This barrier will prohibit access to the trench for workers who are not involved in the trenching activity
- Workers will be tied off to a stable structure using the lanyard and belt system
- Workers will not jump across the open trenches, and
- Walkways with railings will be installed across the trenches as necessary

Protective systems will be reviewed and approved by the Senior Project Engineer. Daily inspections of the excavations and trenches will be conducted by the SHSO. As defined by OHSA, the SHSO is identified as the on site "competent person." The daily inspections will include the following:

- Observation of excavation/trench conditions for situations that could result in possible cave-ins, and
- Indications of protective systems failure

Inspection of the excavations and trenches will be conducted prior to the start of work, and frequently, throughout the work shift. Inspection will also be conducted after every rain storm or other potential hazard increasing occurrence.

Spill Containment

During this project the "Reporting Hazardous Material Spills/Incidents" found in Section 2.02 of the *J.A. Jones Safety Procedures and Programs Manual* will be followed. However, the SHSO will review, during on site safety meetings, the responsibilities of site personnel in the event of a spill. The SHSO will notify the MCAS Fire Department (911) in the event of a small or large spill. Site workers respond to the situation by controlling and/or containing the spill. Once the spill is under control, the Spill Containment Program will be consulted. The SHSO will submit a MCAS Spill Report to EAD within 24 hours of the spill occurrence. This report will detail the characteristics, extent, and response measures taken with regard to the spill.

Hard Hat Areas

For this project, all workers and site visitors will wear hard hats while on site.

Lockout/Tagout Procedures

Site personnel involved with activities where potential hazardous energy sources may exist will follow the procedures found in the "Danger Tag, Lock, and Try Program," found in Section 6.10 of the *J.A. Jones Safety Procedures and Programs Manual.* A hazardous energy source is defined as any source of electrical, mechanical, hydraulic, pneumatic, chemical, thermal, or any form of stored energy that could unexpectedly energize a piece of equipment and injure an employee. The SHSO will review the procedures to be followed during the on site safety meetings, however, no lockout/tagout measures are expected to be required at the work sites.

Soil Stockpile Maintenance

As previously stated, suspected contaminated soil will be staged at an area designated by the USN. Backfill, however, will be stockpiled at the work site. Backfill stockpiles will be maintained in such a manner such that the risk of collapse or slide is kept to a minimum. The height of soil stockpiles will kept to a maximum of approximately six feet.

5.7.1 Mobilization/Construct Temporary Facilities

During this site activity, workers will be setting up equipment and bringing materials to the work sites. Slip, trip, and fall hazards; lifting hazards; traffic hazards; and other safety hazards associated with movement of equipment and materials will be present during this activity.

Site personnel may be involved in activities entailing potential safety hazards during the initial setup activities. Personnel involved in utility location will work within the project sites including roadways used by site vehicles. Workers will take precautions in potentially dangerous situations such as crossing lanes of traffic and working near motorized vehicles. Topography within the work areas are both sloped and flat; however, workers should take precautions to avoid slip, trip, and fall hazards at the work sites.

5.7.2 Surface Water Control

The surface water control activities will involve workers using shovels to redirect surface water runoff during construction. It will be the responsibility of the SHSO to identify unsafe work practices, to instruct workers on proper handling of equipment while in the vicinity of utilities and to stop work progress, if necessary. Workers should use caution when walking around trenches, being cognizant of slip, trip, and fall hazards. In addition, on site personnel shall be aware of any equipment operating in the area. The potential to encounter unknown underground utilities is unlikely; however, workers will stop work and notify the SHSO if any questionable object is encountered. The SHSO will authorize the start of work after such an encounter.

5.7.3 Horizontal Well Installation

Horizontal well and system installation activities will involve work activities in the vicinity of drilling equipment. Drilling equipment will be operated by trained personnel, and on site geologists/engineers will maintain a minimum distance of five feet from the active drilling equipment. Overhead, lifting, slip, trip, and fall, and noise hazards will be present during drilling activities. Hard hats, steel toed boots, and hearing protection will be utilized during drilling activities. Precautions taken during the installation of horizontal wells will be identical to those described in **Section 5.7 Potential Safety Hazards** for open trenches and excavations.

5.7.4 Hand Excavation Near Utilities

Hand excavations will involve workers using shovels to uncover buried utilities. Level D PPE will be worn during this phase. The SHSO will inspect the work progress periodically to verify that workers demonstrate caution while working in these areas. It will be the responsibility of the SHSO to identify unsafe work practices, to instruct workers on proper handling of equipment while in the vicinity of utilities, and to stop work progress, if necessary. Workers should use caution when walking around trenches, being cognizant of slip, trip, and fall hazards. The potential to encounter unknown underground utilities is unlikely; however, workers will stop work and notify the SHSO if any questionable object is encountered. The SHSO will authorize the start of work after such an encounter. Precautions taken during hand excavation near utilities will be identical to those described in **Section 5.7 Potential Safety Hazards** for open trenches and excavations.

5.7.5 Machine Excavation and Backfilling

During soil excavation activities, personnel will be utilizing powered excavation equipment. Workers will use caution when working around the powered equipment. The use of hand signals for work activities will assist both the operator and site worker in the safe operation of equipment and will be discussed at daily safety briefings. Although underground utilities will have been located prior to excavation, workers will be briefed as to the potential of encountering unknown underground utilities during the excavation activities. On site workers will cease work and notify the SHSO if any questionable object is encountered. Workers will also be aware of potential uneven ground surfaces and other hazards that could cause an individual to slip, trip, and/or fall.

The SHSO will inspect the work progress periodically to verify that workers demonstrate due care while working in these areas. It will be the responsibility of the SHSO to identify unsafe work practices, to instruct workers on proper handling of equipment while in the vicinity of utilities, and to stop work progress, if necessary. Precautions taken during machine excavation and backfilling will be identical to those described in **Section 5.7 Potential Safety Hazards** for open trenches and excavations.

5.7.6 Treatment System Installation

During placement of the skid-mounted treatment system, workers will be required to stage building materials and treatment equipment at the site. Workers will also be exposed to slip, trip, and fall hazards; and lifting hazards during installation of treatment systems. The various trades involved with installation of the treatment system will not be trained in accordance with 29 CFR 1910.120. The treatment system will be installed on a concrete slab and secured with chain-link fencing.

5.7.7 Pipe Trenching

During pipe trenching activities, personnel will be utilizing powered excavation and trenching equipment. Workers will use caution when working around powered equipment. The use of hand signals for work activities will assist both the operator and site worker in the safe operation of equipment and will be discussed at daily safety briefings. Although underground utilities will have been located prior to trenching, workers will be briefed to the potential of encountering unknown underground utilities during pipe trenching activities. It will be the responsibility of the SHSO to identify unsafe work practices, to instruct workers on proper handling of equipment while in the vicinity of utilities, and to stop work progress, if necessary. Workers will also be aware of potential uneven ground surfaces and other hazards that could cause an individual to slip, trip, and/or fall.

The SHSO will inspect the work progress periodically to verify that workers demonstrate caution while working in these areas. Workers should use caution when walking around pipe trenches, being cognizant of slip, trip, and fall hazards.

5.7.8 Treatment System Connections

During the connection of the system piping and equipment controls to the treatment system, workers will be exposed to safety hazards associated with lifting and potential hazardous energy sources. Workers will follow the proper lockout/tagout procedures as outlined in **Section 5.7 Potential Safety Hazards** during the connection of system controls and sensors.

5.7.9 Soil/Water Sampling

Geologists and/or field sampling technicians will use caution and be aware of potential uneven ground surfaces and other hazards that could cause an individual to slip, trip, and/or fall during sampling activities. Prior to sample collection activities of soil stockpiles and excavations and trenches less than three feet in depth, a firm and stable location in the immediate sample collection area will be identified. The use of hand signals during sampling activities will assist both the field technician and any operator of heavy equipment used in the area of sample collection activities.

5.7.10 Operation and Maintenance

The operation phase of each project includes the monitoring and maintenance of treatment equipment and sample collection activities. The physical hazards which may be encountered during operation and maintenance activities include, but are not limited to, heat stress or heat stroke conditions, vehicular traffic, holes or ditches, sharp objects, and uneven terrain. Operation and maintenance personnel will maintain body fluid levels during hot and humid conditions and will take breaks as necessary to prevent heat-inflicted conditions. Personnel will wear reflective clothing and work in pairs when there is danger from vehicular traffic. Familiarization with the local terrain at the site will minimize slip, trip, and fall hazards. Site workers will work around enclosed treatment equipment and a potentially slippery floor surface. Workers will be trained in the operation and maintenance of the equipment prior to the start of this work activity. During the operation and maintenance activities, site workers may contact petroleum-impacted media such as groundwater and air.

5.7.11 Site Restoration and Demobilization

Site restoration and demobilization activities will involve site clean-up activities and dismantling structures and/or devices used during the installation of remediation systems. Site workers will be exposed to potential safety hazards related to lifting; heavy equipment, traffic; and slips trips, and falls.

5.8 PERSONNEL PROTECTION

Anyone entering the remediation work area should be advised of and protected from potential hazards. The purpose of personal protective clothing and equipment is to shield or isolate individuals from the potential health and safety hazards that may be encountered at the site. PPE for this project was selected based on the potential health hazards expected at the work sites, the work tasks to be performed, and previous project experience. It is understood that site workers have learned the proper donning and doffing, maintenance, and inspection of PPE; however, J.A. Jones will review these topics during on site safety briefings

5.8.1 Health Hazard Protection

This section describes the site-specific requirements for the designated levels of protection (Levels C through D). The required PPE to be worn at the specific protection levels and air monitoring requirements are also discussed.

Level D

The following criteria determine Level D protection:

- Air monitoring readings up to 5 ppm above background as detected by a PID (sustained monitoring for a one minute period in the immediate vicinity occupied by site workers).
- When remote potential exists for physical contact of petroleum hydrocarbons or inhalation of organic vapors during work operations.

Level D-Modified

The following criteria determine Level D-Modified protection:

- Air monitoring readings up to 10 ppm above background as detected by a PID (sustained monitoring for a one minute period in the immediate vicinity occupied by site workers)
- When the potential exists for physical contact of petroleum hydrocarbon or inhalation of organic vapors.

Level C

The following criteria determine Level C protection:

- Air monitoring readings from 10-100 ppm above background as detected by a PID (sustained monitoring for a one minute period in the immediate vicinity occupied by site workers)

- The small area of skin left unprotected by chemical resistant clothing will not be adversely affected by atmospheric contaminants, liquid splashes, or other direct contact.

Any positive air monitoring results above 100 ppm will require that workers leave the area and that the area be ventilated. The Project Superintendent/SHSO will determine when the area is safe and personnel may resume work.

5.8.1.1 Personal Protection Equipment

The minimum required PPE for each level of protection is provided below:

Level D

- Coveralls or other appropriate clothing
- Gloves (discretionary)
- Back support braces/lifting belts (hand excavation personnel)
- Leather or chemical resistant boots or shoes with steel toe and shank
- Safety glasses
- Hard hat

Level D-Modified

- Coveralls or other appropriate clothing
- Gloves
- Back support braces/lifting belts (hand excavation personnel)
- Full-face or half-face air-purifying canister equipped respirator [Mine Safety Health Administration (MSHA)/NIOSH approved] available at work area
- Leather or chemical resistant boots or shoes with steel toe and shank
- Disposable outer boots (chemical resistant)
- Safety glasses
- Hard hat

Level C

- Full-face or half-face air-purifying canister equipped respirator (MSHA/ NIOSH approved)
- Chemical resistant clothing (coveralls, hooded two-piece splash suit, or hooded one piece splash suit, at the discretion of the SHSO)
- Back support braces/lifting belts (hand excavation personnel)
- Inner and outer chemical-resistant outer gloves
- Chemical resistant boots with steel toe and shank
- Disposable outer boots (chemical resistant)
- Safety glasses
- Hard hat

Levels of Protection for Work Activities

Initially Level D attire will be worn during all phases of site work. Upgrading of PPE will result if air monitoring results warrant and/or at the discretion of the SHSO. The SHSO will monitor the use and effectiveness of PPE during site work, as well as require that site workers inspect their PPE for proper fit and performance. **Figure 5-9** lists the required levels of protection required for various project tasks.

5.8.1.2 Frequency and Types of Air Monitoring

Direct Reading/Real Time Monitoring Instruments

The following real-time air monitoring devices will be use at the site:

> A PID will be used to monitor organic vapors during intrusive activities involved with pipe trench excavation and horizontal well installation. The PID does not, however, indicate specific compounds while monitoring. Also, a combustible gas meter will be used to evaluate lower explosive limit (LEL) values in the working areas of the site.

Periodic air monitoring will be performed prior to excavation to attain an ambient reading for the area. Subsequent readings will be collected after trench excavation and well installation activities commence. Air monitoring will be performed frequently at the commencement of site work and will be performed at least hourly thereafter. Once soil is removed, the areas will be monitored again to verify LEL values and the existence of any potential chemical hazard. After the SHSO has declared the area suitable for work (based on PID readings), site personnel will be permitted to continue with their activities.

Action Levels

Organic vapor action levels to evaluate required personal protection needs are provided in **Section 5.8.1 Health Hazard Protection** of this SHSP.

Reporting Air Monitoring Results

Air monitoring readings detected will be recorded in the site Ambient Air Monitoring Log. The log will also include date, time, and location of readings, weather conditions, calibration information, and name and signature of person performing the monitoring. **Figure 5-10** presents the standard form that will be used for recording air monitoring results. The SHSO will post monitoring results, so that all values are properly communicated to site personnel.

Personal Monitoring

Because the majority of pipe trench excavation will be performed by an excavator, personal monitoring equipment will not be used during the site work. Periodic monitoring for organic vapors with a PID will be conducted as outlined above to verify workers are not exposed to harmful levels of organic vapors. In addition, it is not expected that the excavation activities will create excessive dust due to the soil moisture content. Wind or work activities create visible amounts of dust, and as a result, misting and/or the use of plastic sheeting in the areas of concern will be employed. In addition, workers will conduct site work in a non-downwind direction whenever possible to minimize dust exposure.

5.8.2 Potential Safety Hazard Protection

A number of preventative measures that can be taken to complete site activities in a safe manner are presented below:

- During site activities, all site workers will obey all USN rules and regulations as well as those presented in this Plan. Of special concern, with respect to site health and safety, are preventative measures and safe working practices that can minimize the risk of injury to site personnel.
- Back strain can be prevented by employing proper lifting techniques when moving supplies, equipment, and tools.
- Slipping on wet surfaces can be prevented by using an absorbent material in a wet area, as well as wearing boots with a deep tread.
- Heavy equipment hazards can be avoided by posting signs that notify site personnel. Individuals operating pieces of heavy machinery should understand their surroundings and the existence of workers in their respective areas. Back-up alarms on heavy equipment provide additional safety measures during operation.
- All electrical lines and/or bare wires will be avoided at all times. Equipment operating in an area where the movement of one of its parts (boom, lift, backhoe) may come in contact with electrical lines, should be used in a different area or replaced with a suitable alternative. An alternating current-minimum distances table provides a reference of minimum working distances to be maintained while working in the area of electricity. This table is provided in the US Army Corps of Engineers, Safety And Health Requirements Manual (EM 385-1-1, September 1996).
- Eye protection will be worn at all times.
- All personnel will be instructed regarding the location and use of fire suppression equipment.
- To minimize a potential hazard, miscellaneous trash and debris that interferes with on site work activities will be collected and properly containerized.

5.8.3 Hazard Communication Program

In accordance with 29 CFR 191.1200, J.A Jones will implement a "Hazard Communication Program" found in Section E of the *J.A. Jones Safety Programs and Procedures Manual.* A Material Safety Data Sheet station will be located at the site trailer. The MSDS for all potential contaminants and any other chemical used during the project will be posted as part of this program.

5.8.4 Hearing Conservation Plan

The SHSO will be responsible for monitoring noise at the site, as the potential for high noise levels exists during all phases of work. **Figure 5-11** lists the OSHA 29 CFR part 1926 approved permissible noise levels for personnel working an eight hour shift. Monitoring will be performed initially, and then periodically during site work. Site vehicles and equipment are expected to be the sources of extraneous noise. Should the SHSO determine excessive noise levels exist at the work sites, appropriate hearing protection will be distributed. Regardless of noise levels determined by the SHSO, hearing protection will be available to site workers. The SHSO will follow the procedure outlined in the "Hearing Conservation Program" found in Section G of the *J.A. Jones Safety Programs and Procedures Manual.*

5.9 WORK ZONE AND SITE CONTROL

Figure C-5 found in **Section 8.0** of this Work Plan identify the established decontamination areas (personnel and equipment) and the location of temporary facilities which will house emergency equipment. Personnel entering the area must check-in with the SHSO, sign the site Sign-in Log, and read this Plan. The SHSO will retain a copy of the SHSP at the site at all times. The SHSP will be located at the site trailer. Overall site control will be regulated by USN.

- Exclusion Zone (EZ)

  An EZ is established to identify an area that contains potentially contaminated soil and/or groundwater. A five foot area around any open trench will be considered the exclusion zone. During well installation, the EZ will include a five foot radius around the drill rig. After the installation of each individual well, the EZ will follow the drill rig to the next well. The EZ can be identified by engineering controls (temporary barricades, fencing or tape), and a sign that identifies the area as an "Exclusion Zone."

- Contamination Reduction Zone (CRZ)

  A CRZ serves as a buffer area between potentially contaminated and non-contaminated areas. The CRZ is defined as the ingress/egress path to/from the EZ (including decontamination areas). As stated previously, contaminated soil is not expected during trenching activities, so the CRZ will coincide with the EZ. However,

soil from drilling operations will be considered contaminated. Therefore, the CRZ will be a two foot radius around the EZ. The CRZ will follow the EZ to each well installation point, and will serve as a buffer area for decontamination purposes. The CRZ's will be delineated with engineering controls as mentioned above.

- Support Zone (SZ)

  A SZ is a non-contaminated area where support facilities are located. The SZ is identified as that area that lies outside of the EZ and CRZ.

Within the established support zone, workers will have toilet facilities and an area to wash their hands. Workers will be permitted to take their scheduled breaks and eat lunch within the established area; there will be no hand-to-mouth activity permitted in any area other than the SZ.

Communication with on and off site personnel will be conducted via telephone. J.A. Jones will have a mobile telephone on the site at all times. Should the need arise, radios will be used; however, telephones will serve as the primary communication device for general communication and reporting hazards.

5.10 DECONTAMINATION

J.A. Jones will erect a portable decontamination area for personnel and equipment at the work site. The location of the decontamination equipment will be specified by the contracting officer to prevent operational conflicts at the Marine Corps Air Station. The decontamination equipment includes but is not limited to separate wash water and rinse tubs for equipment (hand tools, etc.) and personnel, and an on site water source and eye wash station. If applicable, used wash and rinse water that comes in contact with potential petroleum-impacted material at this area will be containerized in 55-gallon drums. A sample of the containerized decontamination water will be collected and the decontaminated water will be transported to a treatment or recycling facility permitted to accept the material, or hauled to an existing operational groundwater recovery and treatment system on the Marine Corps Air Station.

Equipment decontamination procedures will consist of manually removing soil from earth moving equipment with brooms and hand tools. Any equipment that comes in contact with petroleum-impacted soil material, if encountered during pipe trench excavation activities, will be decontaminated after completion of field work and before leaving the site. All reusable equipment used to collect, handle, or measure soil and groundwater samples will be decontaminated with a phosphate-free soap before coming into contact with any sample. Decontamination of equipment will occur at the sampling locations.

Used PPE; i.e., gloves (cloth or chemical resistant), Tyveks®, boot covers, and respirator cartridges (if applicable); will be containerized and properly disposed of at a disposal facility permitted to accept petroleum contaminated PPE. Complete details of the

decontamination procedures to be followed at the work site are addressed in **Section 5.0 Health and Safety Plan** of this Plan. Sampling equipment decontamination procedures are provided in **Section 2.1.3.3 Equipment Decontamination**.

Elements of the decontamination process and the decontamination area have been designed so as to minimize disruption to the environment. The procedures found in this section will be carried out under the direct supervision of the SHSO.

5.10.1 Personnel Decontamination

Personnel in Level D, Level D modified, and Level C attire will be required to dispose of any gloves (cloth or chemical resistant), Tyveks® (if applicable) and/or boot covers, and wash their hands before leaving the site. All disposable PPE will be disposed of by the SHSO.

Air Purifying Respirators (APR) will also be decontaminated. All cartridges will be removed prior to decontamination and disposed of properly. Each site worker is responsible for the decontamination and clean storage of his/her own APR. The SHSO will discuss proper respirator decontamination techniques and advise site personnel of how to properly dispose of their used cartridges.

Limited temporary decontamination areas will be designated at each work site. The location of these facilities will be coordinated by the SHSO and USN personnel at the site. J.A. Jones will maintain the decontamination facilities, so that the following decontamination steps at the respective levels may be accommodated:

<u>Level C Decontamination Steps</u>

Step 1: Boot Cover and Outer Glove Wash
Step 2: Boot Cover and Outer Glove Rinse
Step 3: Tape Removal
Step 4: Boot Cover Removal
Step 5: Outer Glove Removal
Step 6: Suit/Safety Boot Wash
Step 7: Suit/Safety Boot Rinse
Step 8: Safety Boot Removal
Step 9: Splash Suit Removal
Step 10: Inner Glove Wash
Step 11: Inner Glove Rinse
Step 12: Face Piece Removal
Step 13: Inner Glove Removal
Step 14: Remove Respirator

Level D Decontamination Steps

Level D (Modified)

Step 1: Outer Glove Wash
Step 2: Outer Glove Rinse
Step 3: Tape Removal
Step 4: Boot Cover Removal if Worn
Step 5: Outer Glove Removal
Step 6* Inner Glove Rinse
Step 7* Inner Glove Removal
Step 8: Tyvek Removal if Worn
Step 9: Safety Boot Wash
Step 10: Safety Boot Rinse
Step 11: Inner Glove Removal

Level D

Step 1: Remove Outer Garments (i.e., coveralls)
Step 2: Remove Outer Gloves
Step 3* Remove Inner Gloves

* Note: Inner gloves will be included as a part of these respective PPE ensembles if the SHSO so warrants.

5.10.2 Equipment Decontamination

Excavation and/or equipment used in the trenching and other site activities will be decontaminated after tasks are completed and before leaving the site. Excavation and trenching equipment will be decontaminated with a phosphate-free soap. The equipment used during project activities includes but is not limited to the following:

- John Deer 690 Excavator
- Dump Truck (Tandem, 12 Ton)
- Compactor (13 inch vibratory plate)
- Pickup Truck (3/4 ton, 4WD)
- John Deer 624 3 yd. Loader
- Miscellaneous Trenching Tools
- Miscellaneous Piping/Hand Tools

In the event of inclement weather, where precipitation is of concern, wheels on trucks and equipment which may have contamination on them will be cleaned before permitted to travel on roads, taxiways, etc. This will minimize the potential for foreign material to accumulate in areas where mud, dirt, and other debris are unwanted. **Figure C-5** shows the location of the equipment decontamination area.

5.10.3 Wastewater Disposal

Wastewater will be disposed of in accordance with the transportation and disposal plan presented in **Appendix C**.

5.11 CONTINGENCY PLAN

The following contingency plan has been developed in the case that extraordinary situations arise at the Cherry Point Marine Corps Air Station facility during excavation activities. The SHSO will discuss the identification, signaling, and required response for the extraordinary situations listed in this section of the Plan during the Site-Specific Training. **Figure 5-12** shows the Emergency Telephone Numbers that will be posted at the site. The off site and nearest hospital to be used is the Craven Regional Medical Center, New Bern, North Carolina. A map to the hospital will be posted at the site, see **Figure 5-13**. Should the selected hospital change, then this Plan and the map will be modified accordingly.

5.11.1 General Response Conditions

Emergencies at the site must be dealt with in a manner that minimizes the health and safety risk to both site personnel and the public. In regard to the general emergency response procedures, J.A. Jones will follow the "Emergency Response Procedures" as outlined in Section 1.06 of the *J.A. Jones Safety Programs and Procedures Manual.* The following sections deal with potential incidents.

5.11.1.1 First Aid

First aid will be administered by the closest, certified individual to the accident/incident. This assistance will be coordinated by the SHSO and will be conducted in a manner so that those rendering assistance are not placed in a situation of unacceptable risk. The primary concern will be to avoid placing a greater number of individuals in jeopardy.

5.11.1.2 Accident Report and Response Procedure

All personnel will report any accidents or unusual incidents to the SHSO. The SHSO is responsible for conducting the emergency response in an efficient and safe manner. It will be the responsibility of the SHSO to determine whether or not off site assistance and/or medical treatment is required. The SHSO will be responsible for alerting the USN on site representative and off site authorities to arrange for their assistance during this time.

The SHSO is responsible for completing a Lost Time Injury, Accident Investigation Written Statement, Contractor Significant Incident, and Accident Investigation Photo Log reports as presented in **Figures 5-5** through **5-8**.

5.11.1.3 Response Requirements

To respond to emergencies, the SHSO will be certified in Adult CPR and First Aid by the American Red Cross or other approved agency. This individual will be available to provide first aid in the event of an emergency.

5.11.2 Responsibilities

The SHSO will be responsible for directing response activities in the event of an emergency/incident. The SHSO will:

- Assess the situation
- Determine the required response measures
- Notify the appropriate individuals
- Direct on site personnel during the emergency, and
- Contact and coordinate with government agencies if appropriate

5.11.3 Public Response Agencies

A telephone number list of public response agencies to be contacted in the event of on site emergencies is provided in **Figure 5-12**. In the event of an emergency, the SHSO and Site Supervisor will assume authority for contacting the appropriate emergency response agency. All agencies will be notified prior to commencement of work as to the nature of activities at the site. In the event of an emergency situation, site personnel will lend all necessary assistance to the agency in charge.

The SHSO will post at the site trailer emergency telephone numbers and a map showing the preferred route to the nearest hospital along with the local and permanent home phone numbers of the SHSO (during non-working hours) and other site personnel.

5.11.4 Emergency Response Equipment

Before remediation activities begin, the following emergency equipment will be stored at the site trailer and tested if applicable to verify working order:

- First aid kit
- Air horn
- Emergency eyewash station
- 20 pound fire extinguisher (ABC-type)
- Spare PPE, such as safety glasses, hard hats, and respirators, and
- Water for washing hands and face

Other equipment used for the routine implementation of the worker health and safety protection and monitoring programs will be made available as needed to support emergency response activity.

5.11.5 Accidents and Non-Routine Events

Possible emergencies are outlined in the following subsections. These are not intended to cover all potential situations. Every incident is unique and must be dealt with in a manner that will not cause further harm to site personnel and/or the surrounding environment. Appropriate initial response is to be provided to assist those in jeopardy without placing additional personnel at unnecessary risk.

5.11.5.1 Workers Injury

The remediation activities to be performed have the potential to cause worker injury. Many of these injuries will be non-chemical in nature. Any sprains, rashes, and lacerations will be treated promptly. It is of utmost importance that follow-up care be taken, so that minor injuries do not become aggravated by existing site conditions. Employees are required to report all injuries and illness to the SHSO.

If a worker is physically injured, American Red Cross First Aid procedures will be followed. Depending on the nature of the injury, off site/emergency medical response may be sought. If the employee is injured in a potentially contaminated area and can be moved, he/she will be taken (via stretcher) a safe distance from the work area where contaminated clothing will be removed and emergency decontamination performed, emergency first aid administered, and transportation to a local emergency medical facility conducted.

If a worker in a potentially contaminated area can only be moved by emergency medical personnel, the SHSO will decide what protective equipment is required to be worn by medical personnel.

If the injury to the worker is chemical in nature, the following first aid procedures will generally be instituted as soon as possible:

- Skin exposure - If contaminated soil or liquid comes into contact with skin, wash immediately with the proper rinsing agent as specified in the MSDS;

- Inhalation - If a person inhales large amounts of organic vapor, move/ambulate to fresh air immediately. If breathing has ceased, perform mouth-to-mouth resuscitation; and if the heart has stopped, perform CPR immediately. Always keep the individual warm and as calm as possible. Medical attention should be sought immediately; and,

- Ingestion - If a contaminated solid or liquid is swallowed, medical attention should be sought immediately. In the interim, the local Poison Hotline should be contacted, so that proper medical procedures can be performed while emergency personnel are in transit.

5.11.5.2 Heat/Cold Stress

Adverse weather conditions are an important consideration in planning and conducting site operations. Hot or cold weather can cause physical discomfort, loss of efficiency, and personnel injury. Of particular importance during the stages of this project is heat stress. Heat stress is possible while working at certain levels of PPE protection, when impermeable layers are donned.

Heat stress occurs when the body's physiological processes fail to maintain a normal body temperature because of excessive heat. The body reacts to stress related to heat a number of different ways. The reactions range from mild, such as fatigue, irritability, anxiety, and decreased concentration, to severe, such as death. Heat related disorders are generally classified into four basic categories: heat rash, heat cramps, heat exhaustion, and heat stroke. The descriptions, symptoms, and treatment for these disorders are described as follows.

Heat Rash

Description - Heat rash is caused by continuous exposure to heat and humid air and is generally aggravated by coarse clothing. This condition decreases the ability to tolerate heat. This condition is the mildest of heat related disorders.

Symptoms - Mild red rash which is generally more prominent in areas of the body in contact with personal protective equipment.

Treatment - Decrease the amount of time in personal protective equipment and use powder to help absorb moisture.

Heat Cramps

Description - Heat cramps are caused by perspiration that is not off-set with adequate fluid intake. This condition is the first sign of a situation that can lead to heat stroke.

Symptoms - Acute, painful spasms occurring in the voluntary muscles (e.g., abdomen and extremities).

Treatment - Remove a victim to a cool area and loosen clothing. Have victim drink 1 - 2 cups of water immediately and every 20 minutes thereafter until the symptoms subside. Total water consumption should be 1 - 2 gallons per day. Consult with a physician.

Heat Exhaustion

Description - Heat exhaustion is a state of very definite weakness or exhaustion caused by the loss of fluids from the body. This condition is more severe than heat cramps.

Symptoms - Pale, clammy, moist skin with profuse perspiration and extreme weakness. Body temperature is generally normal and the pulse is weak and rapid. Breathing is shallow. The victim may show signs of dizziness and may vomit.

Treatment - Remove the victim to a cool, air conditioned atmosphere. Loosen clothing and require that the victim lay in a flat position with the feet slightly elevated. Have the victim drink 1 - 2 cups of water immediately and every 20 minutes until the symptoms subside. Seek medical attention, particularly in severe situations.

Heat Stroke

Description - Heat stroke is an acute and dangerous situation. It can happen in a very short time period. The victims temperature control system shuts down completely resulting in a rise in body core temperature to levels that can cause brain damage and can be fatal if not treated promptly and effectively.

Symptoms - Red, hot, dry skin, with no perspiring. Rapid respiration, high pulse rate, and extremely high body temperature are other symptoms.

Treatment - Cool the victim quickly. If the body temperature is not brought down fast, permanent brain damage or death can result. The victim should be soaked in cool water. Get medical attention as soon as possible.

The following control measures will be employed to help control heat stress:

- Provision for adequate liquids to replace lost body fluids. Employees must replace water and salt lost through perspiration. Employees will be encouraged to drink more than the amount required to satisfy thirst, since thirst satisfaction is not an accurate indicator of adequate salt and fluid replacement. Replacement fluids can be fresh cool water and commercial mixes such as Gatorade.
- Acclimate employees to working conditions by slowly increasing workloads over extended periods of time. Do not begin site work activities with the most demanding physical expenditures.
- Where possible, conduct strenuous activities during cooler portions of the day, such as, early morning or early evening.
- Establish a work-rest regimen that will provide adequate rest periods for cooling down.
- Breaks will be taken in a cool rest area.

- Employees will not be assigned other tasks during rest period.
- Employees will be informed of the importance of adequate rest, acclimatization, and proper diet in the prevention of heat stress.

Injury due to cold exposure may be either local or systemic. Local, cold exposure is generally described as frostbite and systemic cold exposure is referred to as hypothermia.

Frostbite injuries most commonly occur on the body extremities (nose, cheeks, hands, feet). Hypothermia is a decrease of core temperature to 95° F or below. Risk factors for the development of frostbite and hypothermia include temperature, medication/drugs, alcohol, wetting, and wind. Frostbite and hypothermia can occur at moderate temperatures (15-40°F) with moderate winds (1-4 mph). When temperatures fall within the aforementioned range, the SHSO will implement the proper controls found in Section 4.01, "Controlling Heat/Cold Stress" of the *J.A. Jones Safety Procedures and Programs Manual.*

One or more of the following control measures can help prevent frostbite and hypothermia:

- Do not allow skin to be continuously exposed to sub-zero temperatures
- Dry, loose clothing over extremities
- Proper diet, acclimation, and rest
- Dry clothing
- Establishment of work-rest regimen that will provide adequate rest periods of warming
- Taking breaks in warm area

As with warm environments, individuals can achieve a certain degree of acclimation when working in cold environments. The body will undergo some changes that will increase the body's comfort and also reduce the risk to cold injury. Working in cold environments causes significant water losses through the skin and the lungs as a result of the dryness of the air. Increased fluid intake is essential to prevent dehydration, which effects the flow of blood to the extremities and increases the risk of cold injury.

5.11.5.3 Fires

Personnel in each work crew will be knowledgeable in fire-suppression techniques. The site-specific training will cover:

- Immediate notification of the MCAS Fire Department (911)
- Location and use of fire extinguishers
- Techniques for smothering fires, using available non-combustible materials
- Emergency evacuation procedures in the event fires reach an out-of-control level

Each piece of heavy equipment will be equipped with a fire extinguisher.

Small Fires

In the event of a small fire at the site, the SHSO will, at a minimum, take the following actions:

- Immediate notification of the MCAS Fire Department (911)
- Evacuate all unnecessary personnel from the area to an upwind location, if possible
- Attempt, using properly protected personnel, to extinguish fire using portable fire extinguishers or by smothering
- Request emergency response assistance (ambulance, fire, hospital, poison control center) as needed for any injuries or exposures to hazardous chemicals.

Large Fires

In the event of a large or small fire which cannot be extinguished, the SHSO will undertake the following actions:

- Immediate notification of the MCAS Fire Department (911)
- Evacuate all personnel from the area of the fire, preferably to an upwind location

Evacuation Procedures

In the event that the SHSO should declare an evacuation, all personnel would be required to exit the defined work area to an upwind location near the site perimeter or beyond.

5.11.5.4 Inclement Weather Conditions

Inclement weather conditions may occur without warning. It will be the responsibility of the SHSO to halt work due to eminent danger. In the event that extreme weather conditions caused by high winds, hurricanes, etc. arise, site personnel will secure or remove all site facilities, materials, and equipment so that it does not become a hazard; secure temporary utilities where possible; verify trailer tiedowns; and cover all exposed openings in existing facilities to minimize potential wind and water damage. The SHSO will also be responsible to commence work once the danger has passed.

Housekeeping and maintaining the cleanliness of the site will be a priority during construction activities to minimize the potential of foreign object debris dangers to personnel and equipment during implement weather conditions.

The hurricane season in the immediate area surrounding the Marine Corps Air Station commences on June 1 and continues through November 30. Storms of non-tropical origins such as frontal passage, local thunderstorms and tornadoes are much more frequent and can occur year round.. J.A. Jones will review all Navy notification procedures and local readiness plans concerning inclement weather once they are made

available. The various types of storms which occur in the Cherry Point area and their readiness conditions are provided as follows.

Storms

1. Thunderstorm: Associated with cumulo-nimbus clouds - usually affects only a small area. It always produces thunder and lightening and may generate hailstorms and violent wind gusts.
2. Tornado: A tight rotary windstorm. Although small in scale, it is one of the most violent storms known.
3. Waterspout: A tight rotary windstorm over or close to the watch area.
4. Gale: A non-tropical windstorm with expected wind speeds 37 to 47 knots.
5. Storm: A non-tropical windstorm with wind speeds 48 knots or greater.

Storm Readiness Conditions

1. Small Craft Warning: Harbor and inland waters are experiencing winds of 33 knots or less and wind driven waves of concern to small craft.
2. Tornado Watch: Conditions are favorable for tornadoes and associated thunderstorms to form within or close to the watch area.
3. Tornado Warning: A tornado has been sighted or verified by radar within or close to the watch area.
4. Severe Thunderstorm Watch: Severe thunderstorms (wind gust of 50 knots or greater and/or hail of 0.75 inch diameter or greater) are probable within or close to the watch area.
5. Severe Thunderstorm Warning: A severe thunderstorm has been sighted or verified by radar within or close to the watch area.
6. Thunderstorm/Tornado Condition II: Destructive winds and the weather phenomena indicated are expected in the general area within 6 hours. Associated lightening, torrential rain, hail, severe downbursts, and sudden wind shifts are possible. Take precautions which will maintain an appropriate state of readiness on short notice.
7. Thunderstorm/Tornado Condition I: Destructive winds and the weather phenomena indicated are imminent or are occurring. Associated lightening, torrential rain, hail, severe downbursts, and sudden wind shifts are possible. Take immediate safety precautions and shelter.
8. Gale/Storm Warning (as applicable): Destructive winds of the force indicated are anticipated within 12 hours.

Tropical Cyclonic Storms

1. Tropical Depression: A tropical cyclone with wind speeds to 33 knots.
2. Tropical Storm: A tropical cyclone with wind speeds from 34 to 63 knots.
3. Hurricane: A tropical cyclone with wind speeds of 64 knots or greater.
   Class 1 - winds of 64 to 82 knots. Storm surge 4 to 5 feet above normal.

Class 2 - winds of 83 to 95 knots. Storm surge 6 to 8 feet above normal.
Class 3 - winds of 96 to 113 knots. Storm surge 9 to 12 feet above normal.
Class 4 - winds of 114 to 135 knots. Storm surge 13 to 18 feet above normal.
Class 5 - winds above 135 knots. Storm surge more than 18 feet above normal.

Major Tropical Storm/Hurricane Conditions

1. Tropical Storm/Hurricane Condition V: Destructive winds of the force indicated (or as specified) are possible within 96 hours.
2. Tropical Storm/Hurricane Condition IV: Destructive winds of the force indicated (or as specified) are possible within 72 hours.
3. Tropical Storm/Hurricane Condition III: Destructive winds of the force indicated (or as specified) are possible within 48 hours.
4. Tropical Storm/Hurricane Condition II: Destructive winds of the force indicated (or as specified) are possible within 24 hours.
5. Tropical Storm/Hurricane Condition I: Destructive winds of the force indicated (or as specified) are possible within 12 hours.

5.11.5.5 Refuges for an Emergency Situation

The SHSO will coordinate with MCAS personnel to establish Building 163 as an emergency refuge for site personnel. This refuge will shield workers from inclement weather an/or other hazards that may arise in an emergency situation. Heat/Cold Stress work breaks will be taken in this area. The location of Building 163 is depicted in **Figure C-6**.

Figure 5-1

J.A. Jones Environmental Services Company

Site Health and Safety Plan Acceptance Form

We, the undersigned, hereby attest that we have reviewed the Site Health and Safety Plan and will follow the procedures, protocols, and practices it sets forth.

Name	Organization	Signature	Date

Figure 5-2

J.A. Jones Environmental Services Company

Sign-In-Log

VISITOR NAME	COMPANY NAME	DATE	TIME IN	TIME OUT	PURPOSE OF VISIT

SAFETY PRE-PLANNING CHECKLIST

Job name: RAC Action for Statement of Work Design, Tank Farm C, MCAS, Cherry Point, North Carolina

Job number: 005-0203-050; POLRAC Delivery Order No. 050

Project Manager/Supt. JoAnne Snelson/Richard Johnson

Maximum number of workers expected on the job: *Direct hire* 5 *Subcontractor* 3 *Total* 8

Who will be designated as the jobsite safety representative? Richard Johnson

Is the company safety manual on site? Yes Is the most current edition of the Construction Industry Standards 29 CFR 1926/1910 on site? Yes

INSURANCE

Insurance Carrier - *Name:* Aetna Casualty & Surety Company

Address: 151 Farmington Ave. Hartford, Connecticut *Phone:* 203/273-2104 *Fax:* 203/273-8437

Safety Representative: Steve Cloutier *Phone:* 704/553-3574

Local Claim Office: 201 S. College Street Charlotte *NC Phone:* 704/353-7663

Do we have the necessary insurance claim forms? Yes Have subcontractors furnished insurance certificates? Yes Have we been named as additional insured on our subcontractors' General Liability policy? Yes

TREATMENT FOR JOB RELATED INJURIES

Physicians - *Name* *Address* *Phone* *Fax*

1. _____

2. _____

Has physician and/or clinic providing medical care for our workers' compensation cases been contacted? _____

Hospital - *Name:* Craven Regional Medical Center

Address: 2000 Neuse Boulevard, New Bern, North Carolina 28562

Phone: (919) 633-8104

Ambulance - *Name:* _____ *Phone:* 911

Fire Department - *Phone:* 911 Police - *Phone:* 911

Have emergency telephone numbers been posted at all jobsite telephones? Yes

Who will be responsible for first-aid treatment, records, and supplies at the jobsite? Richard Johnson

Has your first-aid technician received blood-borne pathogen training? _____ Hepatitis B vaccination? ____

Figure 5-3

Have first-aid supplies been obtained? Yes

Who will be responsible for reporting accidents to Charlotte? Richard Johnson

DRUG TESTS

Who will perform the lab analyses of urine samples? A certified laboratory through the clinic.

Who will perform the collection of urine samples? The staff nurse or technician.

Do you plan to perform random testing? Not during this delivery order. However, J.A. Jones does perform random testing.

COMPETENT PERSON

Who has been identified as a competent person for the following types of construction activities?

Blasting Not Applicable

Respirator use Richard Johnson

Tunnels Not Applicable

Excavation, including trenches Richard Johnson

Jobsite inspections Richard Johnson

Ladders Richard Johnson

Medical services/First-aid Local Paramedics/Richard Johnson

Steel erection Not Applicable

Aerial lifts Not Applicable

Scaffolding Not Applicable

Crane use and inspection, including wire rope and hooks Not Applicable

Electrical installation and regular inspections of temporary power Cherry Point Electrical Inspector

Have our subcontractors identified competent persons for such activities? Yes

PERSONAL PROTECTIVE EQUIPMENT

What protective equipment will workers need?

- ☒ *Hard hats*
- ☒ *Rubber boots*
- ☐ *Fall protection*
- ☒ *Hearing protection*
- ☒ *Eye protection*
- ☒ *Safety foot wear*
- ☒ *Respirators*
- ☒ *Other:* Gloves

SAFETY ADMINISTRATION

What miscellaneous forms are needed?

- ☐ *Employer's first report of injury*
- ☐ *First-aid log*
- ☒ *OSHA 200 form*
- ☐ *Supplemental report for disabling injuries*
- ☒ *Supervisor's accident report*
- ☒ *Safety check lists*

Figure 5-3 (Continued)

TRAINING

Do you have a video tape player and monitor available for the following training:

- Employee Safety Orientation Not Applicable
- Craft Supervisor and Superintendent Safety Training Not Applicable
- Haz-Com Not Applicable
- First Aid Not Applicable
- Bloodborne Pathogens Not Applicable

Do you have a supply of Safe Practices booklets to be provided to new employees? Yes

HAZARD COMMUNICATION PROGRAM

Do you have a project copy of the written company Haz-com program? Yes Have you obtained copies of our subcontractor's written Haz-com program? Yes Have we documented Haz-com training of all company employees at the time of hire? Yes Have we required our subcontractors to provide us with a copy of Material Safety Data Sheets (MSDSs) on each substance brought onto our jobsite that could potentially become a hazard to project personnel? Yes Where will we keep the MSDS file for project personnel to access information? Superintendent will keep available on-site Is the Chemical Inventory Sheet in place and current? Yes

FIRE PROTECTION

What provisions will be made for maintaining jobsite housekeeping? Keep trash containerized

Has a safe place been designated for the storage and/or disposal of scrap material? If needed, it will be evaluated in the field and properly maintained

Where will materials and equipment be stored? On the base where directed

Have portable fire extinguishers been distributed around the project? Yes

Where will gas, oil, and other flammables be stored? In approved containers

Are tanks labeled as to contents, have warning signs been posted, and are tanks vented adequately? Yes

Are fuel tanks grounded and diked? Not Applicable

ELECTRICAL

Have provisions been made to assure that temporary power is protected by GFCIs? Yes

Who will maintain and check GFCIs? Richard Johnson

Figure 5-3 (Continued)

TRAFFIC

Have arrangements been made for employees' parking area? Not Applicable

Any arrangements necessary to control traffic? Yes

What signs will be necessary?

- ☐ *Speed limit*
- ☒ *Barricade tape*
- ☐ *Promote safety: Entrance slogan, bulletin board*
- ☐ *Direct traffic*
- ☒ *Traffic barrels*
- ☐ *To define parking areas*
- ☒ *Warn of special hazards: Excavation, high voltage, crane working, etc.*

SAFETY MEETINGS

How will subcontractors participate in the general safety program? Mandatory attendance required

What will be the schedule of safety meetings?

- ☒ Tool Box Talks *(craft)*
- ☐ Supervisors
- ☐ Jobsite Safety Committee

Who will conduct safety meetings?

Tool Box Talks Richard Johnson

Supervisors _____

Safety Committee _____

Is the "Take 5" Program in place?* Yes

**This program is designed as a supplement to the weekly Tool Box Meetings. Before assigning work, all craft supervisors will meet with their crews to address necessary safety equipment to be used for each assigned work activity, and to specify special safety considerations. This form must be completed before each shift starts work.*

FALL EXPOSURES

Will temporary accesses need to be built in work areas, or can permanent stairs be expedited and used? No

Have scaffold needs been determined? Not Applicable *Built-up* _____ *Hung* _____

Decking selected and marked? Not Applicable

Who will inspect prior to use? Not Applicable Guard rails included? Not Applicable

Who will be responsible for maintaining temporary guard rails? Not Applicable

What type of "leading edge" fall protection will be employed? Not Applicable

Figure 5-3 (Continued)

CRANES AND HOISTS

Will cranes be used on the jobsite? No *What types?*

_____

_____

Have we received a copy of the annual inspection report for each? Not Applicable

Who will perform frequent and/or periodic inspections of the crane(s)? Not Applicable

Will material hoist be used? Not Applicable *Where located?* Not Applicable

Who will inspect hoisting equipment? Not Applicable Company and local safety standards met? Not Applicable

EXCAVATION AND TRENCHING

Are there any underground utilities such as water or gas lines, sewers, cables, or power lines which should be located or marked to prevent damage? Yes Have utility companies been contacted? Yes

Who will be responsible for supervising excavation and/or trenching operations and for employment of the proper worker protection systems? Richard Johnson

Have employees been trained to identify symptoms of an excavation in danger of collapse? Yes

LOCK-OUT/TAG-OUT

Will it be necessary to lock-out/tag-out mechanical, pneumatic, electrical, and hydraulic equipment to protect workers performing work on such systems? Yes

Have employees been trained to understand the lock-out/tag-out procedure? Yes

CONFINED SPACES

Will there be any work taking place in an OSHA defined "confined space"? No

Will a confined-space entry permit be required? Yes If so, who will perform air testing within the confined space? Richard Johnson

Have employees who will enter a permit-required confined space received special training? Yes

Do you have air testing equipment available or on order? Yes

Figure 5-3 (Continued)

SANITATION

Is there a safe source of drinking water? Yes

Who will be responsible for sanitizing drinking water containers? Richard Johnson

What temporary toilet facilities will be needed? Not Applicable

ENVIRONMENTAL

Have you made considerations for control of hazardous material spills? Yes

☐ *Soil contamination* ☐ *Surface water contamination* ☐ *Wet land contamination*

Will hazardous waste and/or substances be generated from the jobsite? No

Is there potential for employee exposure to concentrations of asbestos, lead, etc.? No

SAFETY INCENTIVE PROGRAM

What type of safety incentive program will be established for the jobsite? Not Applicable

Figure 5-3 (Continued)

TAKE 5 FOR SAFETY

This daily five-minute safety program is designed to take place at the start of each work shift. All craft supervisors will be required to meet with their crews to discuss the tasks to be accomplished and the steps that need to take place to work safely, and to address any special conditions. Focusing on safety at the start of each work shift will reemphasize to our employees that we can and will plan safety into our work.

The "Take 5 for Safety" program does not replace our weekly Tool Box Safety meetings. Instead, this program becomes a supplement to the project safety communication system. A sample of the "Take 5" form is shown below:

COMPANY J.A. Jones Environmental Services Company CRAFT _____

PROJECT No _____ CREW No. _____

TASKS TO BE COMPLETED

_____

_____

_____

SAFETY REQUIREMENTS

_____

_____

_____

PERSONAL PROTECTIVE EQUIPMENT REQUIRED _____

_____

_____

TOOLS REQUIRED

_____

_____

_____

SPECIAL CONDITIONS

_____

_____

BY _____ DATE _____

CRAFT SUPERVISOR

Figure 5-3 (Continued)

Figure 5-4

MEDICAL AUTHORIZATION

To: (Physician, Hospital, Clinic, etc.)

Please render immediate medical treatment to employee named below.

JOB NAME & NUMBER

1. INJURED EMPLOYEE (Type/Print)			3. DATE OF INJURY			5. TIME OF INJURY		
Last Name	First	Initial	Month	Day	Year	Hour	Minutes	AM/PM
Medical treatment rendered is subject to the provisions of the State Workers' Compensation Act.			4. DATE INJURY REPORTED			6. EMPLOYEE BADGE	7. SOCIAL SECURITY NUMBER	
			Month	Day	Year			
						#		

How long employed _____ year(s) _____ month(s) _____ week(s) _____ day(s).

Supervisor _____ Social Security # _____

Give a brief description of injury: _____

Please send your report and bill directly to:

(Insurance Carrier's Name) _____

(Mailing Address) _____

By: _____ Title _____

TREATMENT/RETURN TO WORK AUTHORIZATION

TO PHYSICIAN: For our information, we request that the following information be completed and this form given to the employee for return to us. If the employee is not to return immediately to work, please mail this form to us.

TREATMENT RENDERED _____

RETURNED TO: REGULAR WORK _____ LIGHT DUTY _____ SENT HOME _____

ESTIMATED TIME OFF FROM WORK _____

DATE OF NEXT TREATMENT _____

THE INJURY APPEARS TO BE: OCCUPATIONAL _____ NON OCCUPATIONAL _____

_____ PHYSICIAN'S SIGNATURE

INJURED EMPLOYEE _____ (NAME)

_____ DATE

LIGHT DUTY WORK IS AVAILABLE FOR THIS EMPLOYEE

TO EMPLOYEE: This section must be returned to jobsite office prior to returning to work.

Figure 5-4 (Continued)

MEDICAL AUTHORIZATION

JOB NAME & NUMBER

1. INJURED EMPLOYEE (Please Print)			3. DATE OF INJURY			5. TIME OF INJURY		
Last Name	First	Initial	Month	Day	Year	Hour	Minutes	AM/PM

2. Div	Craft	Age	Occ	Nat	Part	Source	Type	Cond	Act

4. DATE INJURY REPORTED			6. EMPLOYEE BADGE	7. SOCIAL SECURITY NUMBER
Month	Day	Year	#	

How long employed _____ year(s) _____ month(s) _____ week(s) _____ day(s).

Supervisor _____ Social Security # _____

Give a brief description of the circumstances leading to the injury, including distances, weights, heights, speed, etc. _____

_____

_____

_____

Corrective action taken to prevent a similar accident. _____

_____

_____

_____

IN SECTIONS 8 THROUGH 17
CIRCLE APPROPRIATE LETTERS

* IN SECTIONS 12 THROUGH 17, THE ITEMS INDICATED WITH AN ASTERISK (*) MUST BE EXPLAINED ON A SEPARATE SHEET

10. AGE GROUP

A 18 – 20 E 36 – 40 I 56 – 60
B 21 – 25 F 41 – 45 J. 61 – 65
C 26 – 30 G. 46 – 50 K 66 – 70
D. 31 35 H. 51 – 55 L 71 +

12 NATURE OF INJURY

A Abrasion, Scratch
B Amputation
C Burn
D. Concussion
E Conjunctivitis (eye irritation)
F. Contusion, Crushing, Bruise
G Cut, Laceration, Puncture
H Dermatitis, Rash
I Electric Shock, Electrocution
J Flashburn (eye)
K Foreign Body
L Fracture
M Heatstroke, Exhaustion
N Hernia, Rupture
O. Inflammation, Irritation
P Respiratory Problems
Q Sprains, Strains, Dislocations
*R Multiple Injuries
*S Injury or Disease (NOT OTHERWISE CLASSIFIED)
*T Non Occupational Claim (record purposes only)

15 ACCIDENT TYPE

A Struck Against
B Struck By
C Fall from Elevation
D Fall on same Level
E Caught In Under, Between
F Overexertion (lifting, throwing, pulling, pushing)
G Contact with Electric Current
H Contact with Temperature Extremes
I Contact with Chemicals, Dust, Smoke
J Accident Type (NOT OTHERWISE CLASSIFIED)

8 DIVISION

A Addison F Florida K International
B Southeast G Energy L Centric / Jones
C Western H Heavy M Office
D Tompkins I Process - Charlotte N JAJCS
E. Crow J Process - N.E

11. TYPE CASE

A First Aid Only C Lost Time E Fatal
B Medical Only D Recordable F Illness

13 PART OF BODY

A Head (not face, eyes, internal ears)
B Ears Internal (including hearing)
C Eyes
D Face (nose, mouth, lips, teeth, etc.)
E. Neck
F. Arm(s) (including wrist)
G. Hand(s) and/or Finger(s)
H Abdomen (including internal organs)
I Back (incl muscles, spine, spinal cord)
J Chest (incl. ribs, internal organs)
K Hips (incl pelvis, buttocks, internal organs)
L. Shoulders
M. Leg(s) (including ankle)
N. Foot and/or Toe(s)
O. Multiple Body Parts
P. Circulatory System (heart, blood, vessels)
Q. Digestive System
R Respiratory System
*S Body Part (NOT OTHERWISE CLASSIFIED)

16 UNSAFE CONDITION

A No Unsafe Condition
B Defect of Source of Injury (dull, rough, sharp, slippery, broken, etc.)
C Improper or Inadequate Clothing
D Unsafe Method or Procedure
E Unsafe Placement or Storage
F Inadequate Guarding
G Inadequate Illumination
H Inadequate Ventilation
*I Unsafe Condition (NOT OTHERWISE CLASSIFIED)
J Accident caused by Another Contractor

9 CRAFT

A Bricklayer F Iron Worker K Pipefitter
B Carpenter G Laborer L Surveyor
C Cement Mason H Millwright M. Teamster
D Electrician I Operator N Non Manual
E. Insulator J. Painter O. Boiler Maker

14. SOURCE OF INJURY

A. Burning or Welding Operation
B. Hand Tools
C. Power Hand Tools (except grinder)
D. Grinder (hand or pedestal)
E. Material, Equipment Being Handled, Worked
F. Body Motion (not overexertion)
G. Ladder
H. Scaffold
I. Object Improperly Placed, Located
J. Work Surface, Floor, Ground Stair
K. Falling, Flying, Moving Object
L. Building, Structure, Installed Equipment, etc.
M. Rigging Operation
N. Construction Equipment Vehicle
O. Electrical Equipment
P. Irritants (chemicals, dusts, fumes, etc.)
Q Insects, Plants, (wasp sting, poison oak, etc.)
R. Fire
S. Wind
*T. Source of Injury (NOT OTHERWISE CLASSIFIED)

17. UNSAFE ACT

A. No Unsafe Act
B. Working on Moving, Energized, Pressurized Equipment
C. Failure to Wear Protective Equipment (hard hat, safety glasses, rubber goods, foot guards, etc.)
D. Operating Without Authority
E Failure to Secure or Warn
F. Horseplay
G Improper Use of Equipment
H Taking on Unsafe Position or Posture
I Inattention to Footing or Surroundings
J Making Safety Devices Inoperative
K Undue Haste
L Driving Error by Equipment/Vehicle Operator
M Unsafe Loading, Placing, Mixing, etc
N Using Unsafe Equipment
*O Unsafe Act (NOT OTHERWISE CLASSIFIED)

WITNESS SIGNATURE SAFETY REPRESENTATIVE PROJECT SUPERINTENDENT/MANAGER

LOST TIME INJURY REPORT

PROFIT CENTER:________ PROJECT NAME: RAC Action for Statement of Work Design, Tank Farm C, Marine Corps Air Station, Cherry Point, NC _____ PROJECT No: 005-0203-050

PROJECT MANAGER/SUPT: Richard Johnson ________PROJECT PHONE #: ( ) ______

EMPLOYEE:________________________ AGE:___ CRAFT:____________________

INJURY:_____________________________ DATE:______ TIME:_____ AM/PM

DESCRIPTION:____

____

____

IS THERE POTENTIAL THIRD-PARTY LIABILITY? ___ IF SO, EXPLAIN:_______

____

____

WITNESS(ES): _______________, ________________, _________________

THE FOLLOWING STEPS HAVE BEEN TAKEN TO PREVENT A SIMILAR ACCIDENT:

____

____

REPORTED BY:______________________ DATE:______________

- -

THIS REPORT (TYPED) MUST BE FAXED TO C. T. DAVIDSON UPON NOTICE OF A LOST TIME INJURY. A COPY SHOULD BE SENT TO THE DIVISION MANAGER AND TO THE SAFETY AND LOSS PREVENTION DEPARTMENT.

FAX NUMBERS

C. T. DAVIDSON (704) 553-3214

LOSS PREVENTION (704) 553-3195

WRITTEN STATEMENT **EXHIBIT 2**

NAME _____ EMPLOYER _____

ADDRESS _____ POSITION _____

_____

_____

THIS STATEMENT IS IN REFERENCE TO

TELEPHONE NUMBER _____ _____

_____

DATE _____ _____

DESCRIBE THE EVENTS THAT LED TO THE ACCIDENT, HOW THE ACCIDENT HAPPENED, AND ANY OTHER INFORMATION THAT WOULD BE HELPFUL.

_____

_____

_____

_____

_____

_____

_____

_____

NAMES OF OTHERS WITH KNOWLEDGE OF THE ACCIDENT

1. _____
2. _____
3. _____
4. _____

NOTE: RECORD WHO AT ALL TIMES WILL KNOW YOUR WHEREABOUTS.

NAME _____

ADDRESS _____

PHONE _____

The foregoing statement is true to the best of my knowledge and memory.

_____ _____

Signature of Witness Signature of Person Accepting Statement

Figure 5-7

Contractor Significant Incident Report

Report Date:	Contracting Activity/ROICC Office:

1. Accident Classification:

☐ Injury ☐ Illness ☐ Fatality ☐ Property Damage ☐ Procedural Issues ☐ Environmental

Involving:

☐ Hazardous Materials ☐ Electrical ☐ Equipment/Motor Vehicle/ Material Handling ☐ Diving ☐ Falls

☐ Confined Space ☐ Crane/Rigging ☐ Trenching/Entrapment ☐ Fire ☐ Other

☐ Waterfront Operations ☐ Demolition/Renovation

2. Personal Data:

A. Name (Last, First, MI)	B. Age	C. Sex	D. Social Security Number

E. Job Description/Title	F. Employed By	G. Supervisor's Name

3. Witness Personal Data (Attach Signed Witness Statements to Report):

A. Name (Last, First, MI)	B. Age	C. Sex

D. Job Description/Title	E. Employed By

4. General Information:

A. Date of Accident (Month/Day/Year)	B. Time of Accident	C. Exact Location of Accident	D. Type of Construction Equipment (Make, Model, Serial Number, VIN Number)

E. Contract Number/Title	F. Construction Activity SIC	G. Hazardous Material Spill/Release

H. Type of Contract	I. Contractor's Name/Address/Phone Number
☐ Construction ☐ A/E ☐ Service ☐ RAC ☐ CLEAN ☐ JOC ☐ Other _____	(1) Prime: (2) Sub:

J. Safety Manager's Name/Phone Number	K. Insurance Carrier
(1) Prime: (2) Sub:	(1) Prime: (2) Sub:

Figure 5-7 (Continued)

L. Work Activity Involved at Time of Accident	M. Personal Protective Equipment? (1) Available & Used (2) Not Required (3) Available & Not Used (4) Not related to mishap (5) Wrong PPE for Job (6) List Type(s) Used:

5. Injury/Illness/Fatality Information:

A. Severity of Illness/ Injury	B. Estimated Days Lost	C. Estimated Days Hospitalized	D. Estimated Days Restricted Duty

E. List Body Part(s) Effected	F. Nature of Illness/Injury	G. Type and Source of Injury/Illness (1) Type (2) Source

6. Accident Description:

A. Describe in your own words what happened. Use additional paper if necessary.

B. Who provided first aid and/or cleanup of mishap site?

C. Any blood borne pathogen exposure by other than EMT's? If so, who?

D. Was site secured and witness statements taken immediately?

E. List OSHA and EM-385-1-1 standards that were violated.

7. Casual Factors (Explain "yes" answers on supplementary sheet.)	Yes	No
Design - Was design of facility, workplace, or equipment a factor?		
Inspection/Maintenance - Were inspection & maintenance procedures a factor?		
Person's Physical Condition - In your opinion, was the physical condition of the person a factor?		
Operating Procedures - Were operating procedures a factor?		
Job Practices - Were any job safety/health practices not followed when the accident occurred?		
Human Factors - Did any human factors such as size or strength of person, etc., contribute to accident?		

Figure 5-7 (Continued)

	Yes	No
Environmental Factors - Did heat, cold, dust, sun, glare, etc., contribute to the accident?		
Chemical & Physical Agent Factors - Did exposure to chemical agents, such as dust, fumes, mists, vapors, or physical agents such as noise, radiation, etc., contribute to the accident?		
Office Factors - Did office setting such as lifting office furniture, carrying, stopping, etc., contribute to the accident?		
Support Factors - Were inappropriate tools/resources provided to properly perform the activity/task?		
Personal Protective Equipment - Did the improper selection, use, or maintenance of personal protective equipment contribute to the accident?		
Drugs/Alcohol - In your opinion, were drugs or alcohol a factor?		
Job Hazard Analysis - Was the lack of an adequate (EM-385-1-1 Sec. 01.A) activity hazard analysis a contributing factor? - Was it site specific and addressed the type of work/ operations performed when the mishap occurred?		
Management - Did a lack of adequate supervision contribute to the accident? - Was inadequate information provided at pre-con meeting?		

8. Training:

A. Was person trained to perform activity/task?

B. Type of Training?

C. Date of most recent formal training:

List topics discussed:

9. Full Explanation of What Allowed or Caused the Accident:

A. Direct Cause:

B. Indirect Cause:

C. Action(s) taken to prevent occurrences of provide on-going corrective actions:

D. Corrective Action Dates:

(1) Beginning (Mo/Da/Yr) _____ (2) Anticipated Completion (Mo/Da/Yr) _____

Figure 5-7 (Continued)

10. OSHA:

A. Date OSHA was notified: _____	B. Date OSHA investigated: _____
C. Date of OSHA Citation: _____ City of Citation: _____	D. $ Amount of Penalties: $ _____

11. Report Preparer:

Supervisor Completing Report

Name (Print): _____ Title: _____

Signature: _____ Date: _____

12. Management Review (Contracting Officer):

A. Accepted	B. Amendments Required	C. Comments (Include program improvements required for your command, NAVFACHQ construction safety program, and EM-385-1-1)

D. Official Completing Report

Name (Print): _____ Title: _____

Signature: _____ Date: _____

13. Safety and Occupational Health Office Review

A. ☐ Concur	B. ☐ Non Concur	C. ☐ Additional Actions/Comments

D. Safety Personnel Reviewing

Name (Print): _____ Title: _____

Signature: _____ Date: _____

Figure 5-7 (Continued)

CONTRACTOR SIGNIFICANT INCIDENT REPORT INSTRUCTIONS

Complete Sections Appropriate to Incident.

GENERAL. Complete a separate report for each person who was injured, caused or contributed to the accident (excluding uninjured personnel and witnesses). Please type or print legibly. Appropriate items shall be marked with an "X" in box(es), non-applicable sections shall be marked "N/A". If additional space is needed, provide the information on a separate sheet and attach to the completed form. Ensure that these instructions are forwarded with the completed report to the designated management reviewers indicated.

REPORT DATE - Enter the date on which report was initiated.

CONTRACTING ACTIVITY/ROICC OFFICE - Enter the name and address of the Contracting Office administering the contract under which the mishap took place.

SECTION 1 - ACCIDENT CLASSIFICATION. *(Mark All Boxes That Are Applicable.)*

INJURY/ILLNESS/FATALITY/PROPERTY DAMAGE/PROCEDURAL ISSUES/ENVIRONMENTAL - Mark the appropriate block if the incident resulted in any contractor lost-time injury, illness, fatality or near miss. If the mishap involved any of the conditions listed under "Involving" mark the appropriate box(s). Specific questions associated with each condition are available from the Contracting Officer.

SECTION 2 - PERSONAL DATA

A. NAME - Enter last name, first name, middle initial of person involved.
B. AGE - Enter age.
C. SEX - Enter M for Male and F for Female.
D. SOCIAL SECURITY NUMBER - Enter the social security number if available.
E. JOB DESCRIPTION/TITLE - Enter the job description/title assigned to the injured person, e.g. carpenter, laborer, surveyor, etc.
F. EMPLOYED BY - Enter employment company name of person involved.
G. SUPERVISOR'S NAME - Enter name of the immediate supervisor

SECTION 3 - WITNESS PERSONAL DATA

A. NAME - Enter last name, first name, middle initial of witness (If more than one, provide information on all witnesses on separate sheet of paper.)
B. AGE - Enter age.
C. SEX - Enter M for Male and F for Female.
D. JOB DESCRIPTION/TITLE - Enter the job description/title assigned to the injured person, e.g. carpenter, laborer, surveyor, etc.
E. EMPLOYED BY - Enter employment company name of person involved.

SECTION 4 - GENERAL INFORMATION

A. DATE OF ACCIDENT - Enter the month, day, and year of accident.
B. TIME OF ACCIDENT - Enter the local time of accident in military time. Example: 1430 hrs (not 2:30 p.m.).
C. EXACT LOCATION OF ACCIDENT - Enter facts needed to locate the accident scene (installation/project name, building number, street, direction and distance from closest landmark, etc..).
D. TYPE OF CONTRACTOR EQUIPMENT - Enter the Serial Number, Model Number and specific type of equipment involved in the mishap, e.g. dump truck (off highway), crane (rubber tire), pump truck (concrete), etc.?
E. CONTRACT NUMBER /TITLE - Enter complete contract number and title of prime contract, e.g., N62477-85-C-0100.
F. CONSTRUCTION ACTIVITY (SIC) - Enter your companies SIC
G. HAZARDOUS MATERIAL SPILL/RELEASE - List name(s) of any reportable quantities of hazardous materials spilled/released during the mishap.
H. TYPE OF CONTRACT - Mark appropriate box. A/E means architect/engineer. If "OTHER" is marked, specify type of contract on line provided.
I. CONTRACTOR'S NAME/ADDRESS/PHONE NUMBER
   (1) PRIME - Enter the exact name (title of firm), address and phone number of the prime contractor.
   (2) SUBCONTRACTOR - Enter the exact name, address and phone number of any subcontractor involved in the accident.
J. SAFETY MANAGER'S NAME/PHONE NUMBER
   (1) PRIME - Enter the name and phone number of the prime contractors safety manager.
   (2) SUBCONTRACTOR - Enter the name and phone number of the subcontractors safety manager.
K. INSURANCE CARRIER
   (1) PRIME - Enter the exact name (title of firm) of prime's insurance company.
   (2) SUBCONTRACTOR - Enter the exact name of subcontractor's insurance company.
L. WORK ACTIVITY INVOLVED IN AT TIME OF ACCIDENT - Enter the most appropriate work activity the employee was involved in at the time of the accident (e.g. site preparation, painting, paving, masonry, welding, etc.)
M. PERSONAL PROTECTIVE EQUIPMENT (PPE) - Mark appropriate box(es) and list PPE which was being used by the injured person at the time of the accident (e.g. protective clothing, shoes, glasses, goggles, respirator, safety belt, harness, etc.)

Figure 5-7 (Continued)

SECTION 5 - INJURY/ILLNESS INFORMATION

A. SEVERITY OF INJURY/ILLNESS - Enter description from list below.

- NO INJURY
- FATALITY
- PERMANENT TOTAL DISABILITY
- PERMANENT PARTIAL DISABILITY
- TEMPORARY DISABILITY
- NO DISABILITY LIKELY
- LOST WORKDAY CASE INVOLVING DAYS AWAY FROM WORK
- RECORDABLE CASE WITHOUT LOST WORKDAYS
- RECORDABLE FIRST AID CASE
- NON-RECORDABLE INJURY

B. ESTIMATED DAYS LOST - Enter the estimated number of workdays the person will lose from work.

C. ESTIMATED DAYS HOSPITALIZED - Enter the estimated number of workdays the person will be hospitalized.

D. ESTIMATED DAYS RESTRICTED DUTY - Enter the estimated number of workdays the person, as a result of the accident, will not be able to perform all of their regular duties.

E. BODY PART(S) AFFECTED - Enter the most appropriate primary and when applicable, secondary, etc. body part(s) affected, e.g. arm; wrist; abdomen; signal eye; jaw; both elbows; second finger; great toe; collar bone; kidney; etc.

F. NATURE OF INJURY/ILLNESS - Enter the most appropriate nature of injury/illness, e.g. amputation, back strain, dislocation, laceration, strain, asbestosis, food poisoning, heart condition, etc.

G. TYPE AND SOURCE OF INJURY/ILLNESS - Type and Source Codes are used to describe what caused the incident.

(1) TYPE Code stands for an "Action" (Example: Worker, installing conduit, lost his balance and fell five feet from a ladder. Type Code: Fell different level".) Select the most appropriate Type of Injury from the list below:

TYPE OF INJURY/ILLNESS

STRUCK BY/AGAINST	CONTACTED CONTACTED WITH (INJURED PERSON MOVING) CONTACTED BY (OBJECT WAS MOVING)
FELL, SLIPPED, TRIPPED SAME LEVEL/DIFFERENT LEVEL/NO FALL	EXERTED LIFTED, STRAINED BY (SINGLE ACTION) STRESSED BY (REPEATED ACTION)
CAUGHT ON/IN/BETWEEN	EXPOSED INHALED/INGESTED/ABSORBED/EXPOSED TO
PUNCTURED, LACERATED PUNCTURED BY/CUT BY/STUNG BY/BITTEN BY	TRAVELING IN

(2) SOURCE Code stands for an "object or substance." (Example: Worker, installing conduit, lost his balance and fell five feet from a ladder. Source Code: Ladder".) Select the most appropriate Source of Injury from the list below:

SOURCE OF INJURY/ILLNESS

BUILDING OR WORKING AREA WALKING/WORKING AREA STAIRS/STEPS LADDER FURNITURE BOILER/PRESSURE VESSEL EQUIPMENT LAYOUT WINDOWS/DOORS ELECTRICITY	DUST, VAPOR, ETC. DUST (SILICA, COAL, ETC.) FIBERS ASBESTOS GASES CARBON MONOXIDE MIST, STEAM, VAPOR, FUME WELDING FUMES PARTICLES (UNIDENTIFIED)
ENVIRONMENTAL CONDITION TEMPERATURE EXTREME (INDOOR) WEATHER (ICE, RAIN, HEAT, ETC.) FIRE, FLAME, SMOKE (NOT TOBACCO) NOISE RADIATION LIGHT VENTILATION TOBACCO SMOKE STRESS (EMOTIONAL) CONFINED SPACE	CHEMICAL, PLASTIC, ETC. DRY CHEMICAL-CORROSIVE DRY CHEMICAL-TOXIC DRY CHEMICAL-EXPLOSIVE DRY CHEMICAL-FLAMMABLE LIQUID CHEMICAL-CORROSIVE LIQUID CHEMICAL-TOXIC LIQUID CHEMICAL-EXPLOSIVE LIQUID CHEMICAL-FLAMMABLE PLASTIC WATER MEDICINE

Figure 5-7 (Continued)

SOURCE OF INJURY/ILLNESS CONTINUED	
MACHINE OR TOOL HAND TOOL (POWERED: SAW, GRINDER, ETC.) HAND TOOL (NON POWERED) MECHANICAL POWER TRANSMISSION APPARATUS GUARD, SHIELD (FIXED, MOVEABLE, INTERLOCK) VIDEO DISPLAY TERMINAL PUMP, COMPRESSOR, AIR PRESSURE TOOL HEATING EQUIPMENT WELDING EQUIPMENT	INANIMATE OBJECT BOX, BARREL, ETC. PAPER METAL ITEM, MINERAL NEEDLE GLASS SCRAP, TRASH, WOOD FOOD CLOTHING, APPAREL, SHOES
VEHICLE AS DRIVER OF PRIVATELY OWNED, RENTAL VEHICLE AS PASSENGER OF PRIVATELY OWNED, RENTAL VEHICLE DRIVER OF GOVERNMENT VEHICLE PASSENGER OF GOVERNMENT VEHICLE COMMON CARRIER (AIRLINE, BUS, ETC.) AIRCRAFT (NOT COMMERCIAL) BOAT, SHIP, BARGE	ANIMATE OBJECT DOG OTHER ANIMAL PLANT INSECT HUMAN (VIOLENCE) HUMAN (COMMUNICABLE DISEASE) BACTERIA, VIRUS (NOT HUMAN CONTACT)
MATERIAL HANDLING EQUIPMENT EARTHMOVER (TRACTOR, BACKHOE, ETC.) CONVEYOR (FOR MATERIAL AND EQUIPMENT) ELEVATOR, ESCALATOR, PERSONNEL HOIST HOIST, SLING CHAIN, JACK CRANE FORKLIFT HANDTRUCK, DOLLY	PERSONAL PROTECTIVE EQUIPMENT PROTECTIVE CLOTHING, SHOES, GLASSES, GOGGLES RESPIRATOR, MASK DIVING EQUIPMENT SAFETY BELT, HARNESS PARACHUTE

SECTION 6 - ACCIDENT DESCRIPTION

A. Fully describe the accident in the space provided. If additional space is needed continue on a separate sheet and attach to this report. Give the sequence of events that describe what happened leading up to and including the accident. Fully identify personnel and equipment involved and their role(s) in the accident. Ensure that relationships between personnel and equipment are clearly specified. Ensure questions B - E are answered.

SECTION 7 - CAUSAL FACTORS

Review thoroughly. Answer each question by marking the appropriate block. If any answer is yes, explain in item 9 below.

(1) DESIGN - Did inadequacies associated with the building or work site play a role? Would an improved design or layout of the equipment or facilities reduce the likelihood of similar accidents? Were the tools or other equipment designed and intended for the task at hand?

(2) INSPECTION/MAINTENANCE - Did inadequately or improperly maintained equipment, tools, workplace, etc. create or worsen any hazards that contributed to the accident? Would better equipment, facility, work site or work activity inspections have helped avoid the accident?

(3) PERSONS PHYSICAL CONDITION - Do you feel that the accident would probably not have occurred if the employee was in "good" physical condition? If the person involved in the accident had been in better physical condition, would the accident have been less severe or avoided altogether? Was overexertion a factor?

(4) OPERATING PROCEDURES - Did a lack of or inadequacy within established operating procedures contribute to the accident? Did any aspect of the procedures introduce any hazard to, or increase the risk associated with the work process? Would establishment or improvement of operating procedures reduce the likelihood of similar accidents?

(5) JOB PRACTICES - Were any of the provisions of the Safety and Heath Requirements Manual (EM 385-1-1) violated? Was the task being accomplished in a manner which was not in compliance with an established job hazard analysis or activity hazard analysis? Did any established job practice (including EM 385-1-1) fail to adequately address the task or work process? Would better job practices improve the safety of the task?

(6) HUMAN FACTORS - Was the person under undue stress (either internal or external to the job)? Did the task tend toward overloading the capabilities of the person: i.e., did the job require tracking and reacting to many external inputs such as displays, alarms, or signals? Did the arrangement of the workplace tend to interfere with efficient task performance? Did the task require reach strength, endurance, agility, etc., at or beyond the capabilities of the employee? Was the work environment ill-adapted to the person? Did the person need more training, experience, or practice in doing the task? Was the person inadequately rested to perform safely?

(7) ENVIRONMENTAL FACTORS - Did any factors such as moisture, humidity, rain, snow, sleet, hail, ice, fog, cold, heat, sun, temperature changes, wind, tides, floods, currents, dust, mud, glare, pressure changes, lighting, etc., play a part in the accident?

(8) CHEMICAL AND PHYSICAL AGENT FACTORS - Did exposure to chemical agents (either single shift exposure or long-term exposure such as dusts, fibers (asbestos, etc.), silica, gases (carbon, monoxide, chlorine, etc.), mists, steam, vapors, fumes, smoke, other particulates, liquid or dry chemicals that are corrosive, toxic, explosive or flammable, by-products of combustion or physical agents such as noise, ionizing radiation, non-ionizing radiation (UV radiation created during welding, etc.) contribute to the accident/incident?

(9) OFFICE FACTORS - Did the fact that the accident occurred in an office setting or to an office worker have a bearing on its cause? For example, office workers tend to have less experience and training in performing tasks such as lifting office furniture. Did physical hazards within the office environment contribute to the hazard?

(10) SUPPORT FACTORS - Was the person using an improper tool for the job? Was inadequate time available or utilized to safely accomplish the task? Were less than adequate personnel resources (in terms of employee skills, number of workers, and adequate supervision) available to get the job done properly? Was funding available, utilized and adequate to provide proper tools, equipment, personnel, site preparation, etc?

(11) PERSONAL PROTECTIVE EQUIPMENT - Did the person fail to use appropriate personal protective equipment(gloves, eye protection, hard-toed shoes, respirator, etc.) for the task or environment? Did protective equipment provided or worn fail to provide to provide adequate protection from the hazard(s)? Did lack of or inadequate maintenance of protective gear contribute to the accident?
(12) DRUGS/ALCOHOL - Is there any reason to believe the person's mental or physical capabilities, judgment, etc., were impaired or altered by the use of drugs or alcohol? Consider the effects of prescription medicine and over the counter medications as well as illicit drug use. Consider the effect of drug or alcohol induced "hangovers".
(13) JOB/ACTIVITY HAZARD ANALYSIS - Was a written Job/Activity Hazard Analysis completed for the task being performed at the time of the accident? Mark the appropriate box. If *one was performed, attach a copy of the analysis to the report.*
(14) MANAGEMENT - Did the lack of supervisor or management support play a part in the mishap?

SECTION 8 - TRAINING

A. WAS PERSON TRAINED TO PERFORM ACTIVITY/TASK? - For the purpose of this section "trained" means the person has been provided the necessary information (either formal and or on-the-job (OJT) training) to competently perform the activity/task in a safe and healthful manner.
B. TYPE OF TRAINING - Indicate the specific type of training (classroom or on-the-job) that the injured person received before the accident happened.
C. DATE OF MOST RECENT TRAINING - Enter the month, day, and year of the last *formal* training completed that covered the activity-task being performed at the time of the accident.
D. LIST TOPICS DISCUSSED - List topics that were discussed at the training identified in item c. above.

SECTION 9 - CAUSES

A. DIRECT CAUSES - The direct cause is that single factor which most directly lead to the accident. See examples below.
B. INDIRECT CAUSES - Indirect causes are those factors which contributed to, but did not directly initiate the occurrence of the accident.
C. Fully describe all the actions taken, anticipated, and recommended to eliminate the cause(s) and prevent reoccurrence of similar accidents/illnesses. Continue on blank sheets of paper if necessary to fully explain and attach to the completed report form.
D. CORRECTIVE ACTION DATES -
(1) Beginning - Enter the date when the corrective actions(s) identified in c. above will begin.
(2) Anticipated Completion - Enter the date when the corrective actions(s) identified in c. above will be completed

Examples for section 9:
A. Employee was dismantling scaffold and fell 12 feet from unguarded opening.
Direct cause: failure to provide fall protection at elevation.
Indirect causes: failure to enforce USACE safety requirement: improper training/motivation of employee (possibility that employee was not knowledgeable of USACE fall protection, requirements or was lax in his attitude towards safety); failure to ensure provision of positive fall protection whenever elevated: failure to address fall protection during scaffold dismantling in phase hazard analysis.

B. Private citizen had stopped his vehicle at intersection for red light when vehicle was struck in rear by contractor vehicle. (note contractor vehicle was in proper safe working condition).
Direct cause: failure of contractor driver to maintain control of and stop contractor vehicle within safe distance.
Indirect cause: Failure of employee to pay attention to driving (defensive driving).

SECTION 10 - OSHA - Complete this section if applicable.

SECTION 11 - REPORT PREPARER

Enter the *name*, title and signature of person completing the accident report and provide to the Contracting Officer/ROICC representative responsible for oversight of that contractor activity. Enter the month, day, and year that the report was signed by the responsible supervisor.

SECTION 12 - MANAGEMENT REVIEW (CONTRACTING OFFICER)

The responsible report preparer, as identified in section 11, shall forward the completed report to the Contracting Officer/ROICC for review. Upon receipt, the Contracting Officer/ROICC shall review the completed report, validate the information, coordinate with supervisor (identified in section 11) for any necessary corrections, mark the appropriate boxes, provide substantive comments, sign, date, and forward to the responsible EFD/EFA/Activity Safety and Health Office.

SECTION 13- SAFETY AND OCCUPATIONAL HEALTH REVIEW

The Safety and Occupational Health Office shall review the completed report, mark the appropriate box, ensure that any inadequacies, discrepancies, etc. are rectified by the responsible supervisor and management reviewer, provide substantive comments, sign, date and forward the completed report to NAVFACHQ 40K.

PHOTO LOG

PROJECT RAC Action for Statement of Work Design, Tank Farm C, Marine Corps Air Station, Cherry Point, NC

TYPE OF CAMERA _____

PURPOSE OF PHOTOGRAPHS _____

_____

PHOTOGRAPHER _____

TYPE OF FILM _____

WEATHER CONDITIONS _____

LIGHT _____

DEVELOPER _____

FRAME NO.	DATE	TIME	SUBJECT	LOCATION

COMMENTS _____

_____

_____

_____

Figure 5-9

J.A. Jones Environmental Services Company

Levels of Protection Required for Various Activities

Task No.	Description of Task	Level of Protection to be Worn
1	Setup/Construct Temporary Facilities	D
2	Surface Water Controls	D
3	Horizontal Well Installation	D/D - Modified
4	Hand Excavation	D/D - Modified
5	Machine Excavation and Backfilling	D/D - Modified
6	Treatment System Installation	D
7	Soil/Water Sampling	D/D - Modified
8	Site Restoration	D
9	Demobilization	D
10	Operation and Maintenance	D/D - Modified

Figure 5-10

J.A. Jones Environmental Services Company

Air Monitoring Log

Project Name: _____ SHSO: _____

Date	Instrument	Location	Suspected Compound	Concentration	Unit	Comments

Figure 5-11

J.A. Jones Environmental Services Company

RAC Action for Statement of Work Design
Tank Farm C
Marine Corps Air Station
Cherry Point, North Carolina
Contract No. N62470-93-D-3033
Delivery Order No. 050

Permissible Noise Exposures	
Duration Hours/day	Sound Level dBA Slow Response
8	90
6	92
4	95
3	97
2	100
1.5	102
1	105
0.5	110
0.25	115

NOTE: When daily noise exposure is composed of two or more periods of noise exposure of different levels, their combined effect should be considered, rather than the individual effect of each. If multiple levels of noise exposure occur please refer to 29 CFR Part 1926.52 for calculation of the equivalent noise exposure factor.

Figure 5-12

J.A. Jones Environmental Services Company

RAC Action for Statement of Work Design
Tank Farm C
Marine Corps Air Station
Cherry Point, North Carolina
Contract No. N62470-93-D-3033
Delivery Order No. 050

Emergency Telephone Numbers

Marine Corps Base / On-Site Emergency Telephone Numbers

AROICC/NTR and Construction Representative	466-4731
Fire	911
Security	911
Safety	466-2730
Medical Treatment Facility	466-0266
Emergency Maintenance	466-4364

Off-Site Emergency Telephone Numbers

Craven Regional Medical Center	633-8104
Emergency Services of Onslow County	455-9119
Hazardous Chemical Spillage	911
Ambulance	911
Fire	911
Police	911
Poison Control	(800) 672-1697
ChemTrec/Spill Response	(800) 424-9300
National Response Center	(800) 424-8802

Figure 5-13
Hospital Location M

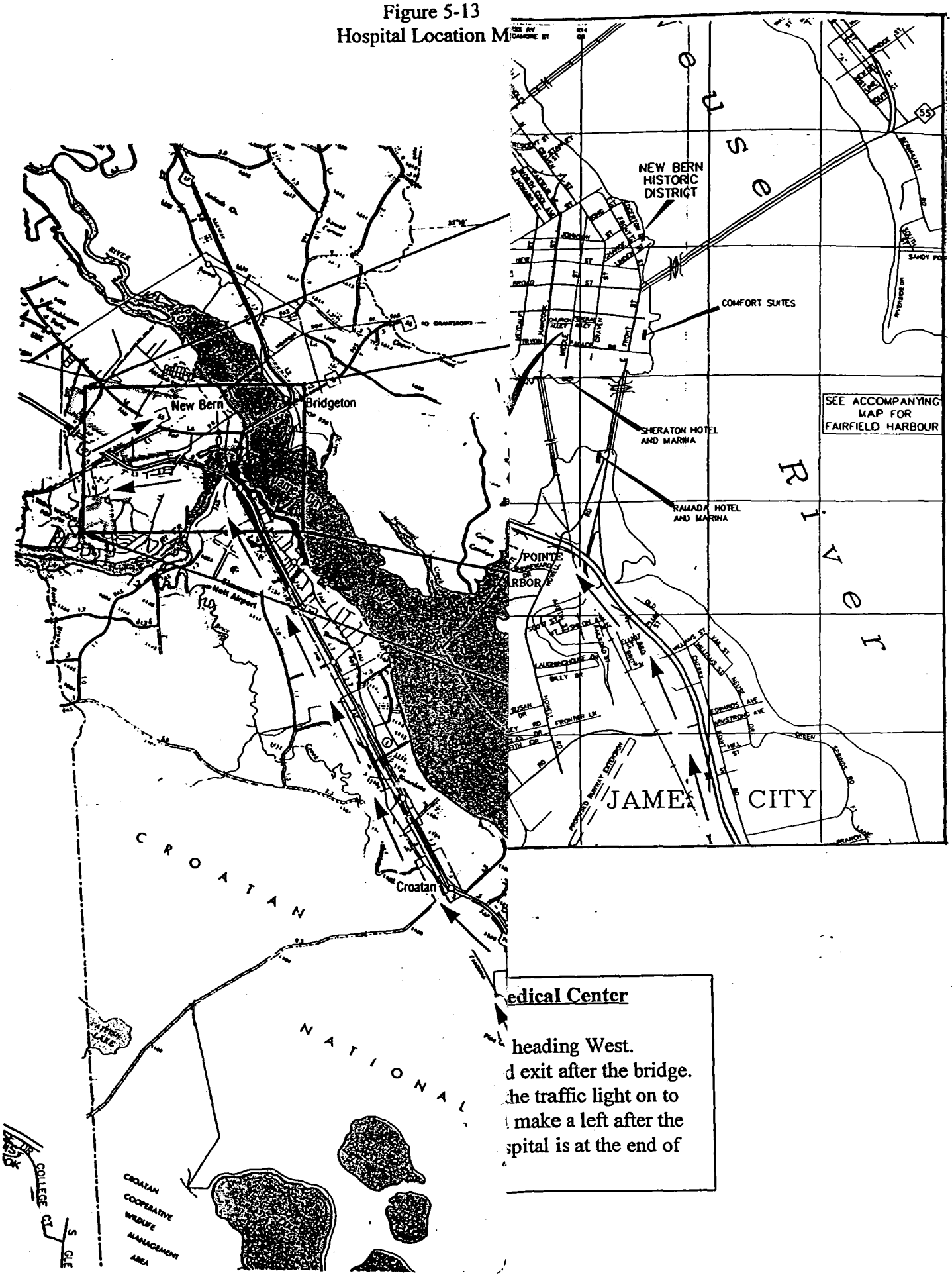

edical Center

heading West.
d exit after the bridge.
he traffic light on to
make a left after the
spital is at the end of

Figure 5-14

SPILL REPORT
for Environmental Affairs Department

Reporting spill: Unit _____ Person _____ Phone No. _____	Date/time of spill: Date/time cleanup began:
Unit responsible for spill:	Date/time cleanup completed:
Material spilled:	Amount spilled:
Spill location (bldg., pit, structure, etc.): Spill enter a drainage system? yes _____ no _____	Type of surface spill was on: Water _____ Asphalt _____ Grass _____ Gravel _____ Soil _____ Concrete _____ Other _____
Procedure to eliminate spill: Shutoff pumps _____ Close valves _____ Overpack container _____ Upright container _____ Nothing available _____ Other _____	Caused by: Equipment failure _____ Human error _____ Other _____ Is this a reoccurring problem? yes _____ no _____
Notification: Check each notified Fire Division (2241/3333) ___ Crash Crew (2420) ___ FMD (4363) ___ EAD (4591) ___ Unit Duty Officer (after hrs) ___ Industrial Hygienist (3833) ___ Joint Safety Office (2730) ___	Name of OSCDR: Section Leader's signature Supervisor's signature
Additional comments from the reporting activity: _____ _____ _____	

EAD Person Receiving Call _____
EAD Spill Log Number _____

J.A. JONES
ENVIRONMENTAL SERVICES

May 6, 1998

Mr. Richard Johnson
8936 Western Way, Suite 10
Jacksonville, Florida 32256

Reference Contract N62470-93-D-3033
Delivery Order No. 050

Dear Mr. Johnson:

This letter is to appoint you as the Site Quality Administrator for J.A. Jones Construction Services for this Delivery Order. As the SQA you are authorized and directed to perform those duties as specified in the Program Quality Control Plan. Some of your responsibilities identified in the plan are restated below for further emphasis:

1. Responsible for attending the coordination and mutual understanding meeting
2. Responsible for performing the Three Phases of Control
3. Responsible for conducting the QC meetings
4. Responsible for performing or directing the performance of inspection and testing activities
5. Responsible for identifying unsatisfactory work and having it corrected
6. Responsible for maintaining a Rework Items List
7. Responsible for monitoring construction/remediation activities

Sincerely,

J.A. JONES CONSTRUCTION SERVICES COMPANY

Marshall Sealy
Program Quality Control Manager

8936 Western Way, Suite 10
Jacksonville, FL 32256
Telephone 904 363 0911
Facsimile 904 363 1421

J.A. JONES
ENVIRONMENTAL SERVICES

May 6, 1998

Mr. JoAnne Snelson, P.E.
8936 Western Way, Suite 10
Jacksonville, Florida 32256

Reference Contract N62470-93-D-3033
Delivery Order No. 050

Dear Ms. Snelson:

This letter is to appoint you as the Invoice Quality Assurance Manager for J.A. Jones Construction Services for this Delivery Order. As Invoice Quality Assurance Manager, you will verify that the project invoices received are accurate and complete.

Sincerely,

J.A. JONES CONSTRUCTION SERVICES COMPANY

Marshall Sealy
Program Quality Control Manager

8936 Western Way, Suite 10
Jacksonville, FL 32256
Telephone 904 363 0911
Facsimile 904 363 1421

J.A. JONES
ENVIRONMENTAL
SERVICES

May 6, 1998

Mr. Michael Halil
8936 Western Way, Suite 10
Jacksonville, Florida 32256

Reference Contract N62470-93-D-3033
Delivery Order No. 050

Dear Mr. Halil:

This letter is to appoint you as the Project Submittal Quality Control Representative for J.A. Jones Construction Services for this Delivery Order. As Project Submittal Quality Control Representative, you will be responsible for review and approval of contractually required submittals.

Sincerely,

J.A. JONES CONSTRUCTION SERVICES COMPANY

Marshall Sealy
Program Quality Control Manager

8936 Western Way, Suite 10
Jacksonville, FL 32256
Telephone 904 363 0911
Facsimile 904 363 1421

SECTION 6.0

QUALITY CONTROL PLAN

The requirements of the overall contract Quality Assurance/Quality Control Plan, written by J.A. Jones, including quality assurance procedures, will be followed for this project.

Attached to this section of the Work Plan are copies of three letters from the Project Quality Control Manager (PQCM), as defined in the J.A. Jones QA Plan. The three separate letters are used to appoint Mr. Richard Johnson, Site Quality Administrator; Ms. JoAnne Snelson, P.E., Project Invoice Quality Administrator; and Mr. Michael Halil, Project Submittal Quality Administrator.

6.1 SITE QUALITY ADMINISTRATOR

Mr. Johnson, as the SQA, will conduct inspections on a continuous basis to verify that the excavation and backfilling procedures are proceeding according to the technical specifications. The SQA is also the Site Supervisor and will be on site during the construction phase of the project. Each day the SQA will record all activities, pertinent conversations with all military personnel, visitors to the work area, incidents and accidents, and any testing completed.

Separate forms will be used to record the field tests such as compaction testing. Work production will be documented on a daily basis by the Site Supervisor and recorded in a Contractor Production Report. The Contractor Production Report is shown as **Figure 6-1**. A Contractor's Quality Control Report which includes the three phases of control will be completed for each segment of work as discussed in **Section 6.7**. The Contractor's Quality Control Report is presented as **Figure 6-2**. Submission of the Contractor's Quality Control Report and the Contractor Production Report to the NTR is required daily. A Contractor's Deficiencies Report, **Figure 6-3**, and a Rework Items List, **Figure 6-4**, provide the NTR, on a monthly basis, items and areas of work that are deficient or require modification.

J.A. Jones will conduct a QC inspection in accordance with the Contract QC Plan. The QC inspection will be scheduled and conducted by the SQA. All QC meetings will be documented by the SQA with meeting minutes delivered to the NTR within three calendar days after each QC meeting.

6.2 INVOICE QUALITY ADMINISTRATOR

Ms. Snelson, as Project Invoice Quality Administrator, will verify that the project invoices received are accurate and complete.

6.3 SUBMITTAL QUALITY ADMINISTRATOR

Mr. Halil, as Project Submittal Quality Administrator, will be responsible for review and approval of contractually required submittals.

6.4 SUBMITTAL REGISTER

The Submittal Register is included in this section as **Table 6-1**. As the project progresses, J.A. Jones will update the submittal register. Submittals will be approved by the Navy, RC&A, or J.A. Jones, as identified in Column D of the register. All approved submittals will be distributed by J.A. Jones to the ROICC (in duplicate), to the project site, and to the project file.

6.5 PROJECT ORGANIZATION

Figure 6-5 defines the management organization for the soil and groundwater remediation project at Cherry Point, North Carolina.

6.6 DEFINABLE FEATURES OF WORK

A list of the definable work features required for completion of the project is provided below:

- Concrete foundation placement
- Soil and groundwater treatment system installation, including SVE blower, SVE moisture separator, FPVE blower, FPVE moisture separator, condensation storage tank, air compressor, air compressor receiver tank, and utility connection;
- Pipe trench excavation including preparation, horizontal well screen placement, bedding, compaction, where required, backfilling and revegetation;
- Horizontal well installation;
- Waste characterization sampling;
- Transportation and treatment of petroleum-impacted soil and groundwater; and,
- System start-up, and operation and maintenance for six months.

6.7 QUALITY CONTROL INSPECTIONS

Quality Control inspections will be performed by the Contractor's SQA. The types of inspections to be performed include preparatory, initial, follow-up, and completion inspections. All inspections will be documented in Contractor's Quality Control Report, presented as **Figure 6-2**. The details of the type of inspections are included in Section 4.1 of the J.A Jones QC Plan and are summarized as follows.

Preparatory Phase
The SQA will review drawings, specification requirements, submittal status, material requirements and on site availability, worker qualifications, and equipment requirements prior to beginning a particular work segment.

Initial Phase
This phase of inspection will document the completeness and acceptability of the particular work segment after a representative portion of the work segment has been completed. The SQA will complete this phase of inspection with input from the PQCM, where necessary. Deficiency Reports will be completed as necessary.

Follow-up Phase
This phase of inspection involves daily surveillance of the work segment to verify conformance to the drawings and specifications. The SQA, as well as other QC personnel, will be involved in the follow-up inspections as necessary. The follow-up inspections will be documented.

Completion Phase
At the completion of a work segment, the SQA will conduct a completion inspection to verify all work items are complete and in conformance with the drawings and specifications.

The Navy will participate in each of these levels of inspection where applicable. Each of these levels will be completed on the following major segments of work detailed below.

6.7.1 Concrete Foundation Placement

A concrete foundation will be formed and placed to provide support for the skid-mounted soil and groundwater treatment system.

Preparatory Phase
The preparatory phase will include a review of the plans and specifications, submittal status, and confirmation of appropriate materials.

Initial Phase
The multiple inspections will be required in during the construction of the foundation. The initial inspection for the installation of the treatment equipment will be initiated following delivery of the treatment system and the equipment has been placed on the slab and connected to the proper utilities. The SQA will document the inspection and note deviations from plans and specifications and any deficiencies in equipment.

Follow-up Phase
The SQA and technical personnel will provide continuous oversight of the foundation placement. Compressive strength, slump, and air tests will be completed on the concrete to verify proper mix design. These tests will be completed in accordance with the

requirements provided in **Section 2.2.1 Concrete**. Daily observation will verify compliance with the technical specifications. Deficiencies will be noted and corrected.

Completion Phase
At the completion of concrete foundation the SQA will conduct a completion inspection to verify that the work was completed in accordance with the plans and specifications. Deficiencies will be noted and corrected. The SQA will evaluate the compressive strength, slump, and air test data to verify that the results are acceptable based on the requirements provided in **Section 2.2.1 Concrete**.

6.7.2 Soil and Groundwater Treatment System Installation and Utility Connection

Soil and groundwater treatment system installation will include the electrical and utility connection of the treatment system and the anchoring of the skid-mounted treatment system to the concrete foundation.

Preparatory Phase
The preparatory phase will include a review of the plans and specifications, submittal status, confirmation of appropriate materials and treatment equipment, worker qualifications and availability, and equipment availability. If no deficiencies are noted, utility connections to the treatment system will commence following placement on the concrete foundation.

Initial Phase
Multiple inspections will be required during installation of the treatment system. The initial inspection for the installation of the treatment system will be initiated following placement of the system and completed when the system is connected to the proper utilities. The installation will include the plumbing of the headers to the treatment system and the electrical connections. The SQA will document the inspection and note deviations from plans and specifications and any deficiencies in equipment.

Follow-up Phase
The SQA and technical personnel will provide continuous oversight of the treatment system placement and the piping and utility connection activities. Deficiencies will be noted and corrected.

Completion Phase
At the completion of treatment system installation, including the utility connections, the SQA will conduct a completion inspection to verify that the work was completed in accordance with the plans and specifications. Deficiencies will be noted and corrected. The SQA will evaluate that the treatment system functions appropriately.

6.7.3 Pipe Trench Excavation

Preparatory Phase
The preparatory phase for the installation of the pipe trenches will include a review of the plans and specifications, submittal status, confirmation of appropriate materials and construction equipment, worker qualifications and availability, and equipment availability. If no deficiencies are noted, pipe trench excavation will commence.

Initial Phase
An initial inspection of the pipe trench will be completed when a representative portion of the trench has been excavated. The SQA will measure the depth and slope of the excavation and verify that the depth and slope are being maintained according to the drawings and specifications.

Follow-up Phase
The SQA and technical personnel will provide oversight during trench and piping installation activities. The SQA will note the depth of the trench, pipe placement, and bedding and cover material in the trench. Daily observation will verify compliance with the technical specifications. Fill activities will be inspected to verify proper placement, soil loading, and compaction, where necessary. Deficiencies will be noted and corrected.

Completion Phase
At completion of the pipe trench installation, the SQA will conduct a completion inspection to verify the work, materials, and equipment are in accordance to the plans and specifications. Deficiencies will be noted and corrected.

6.7.4 Horizontal Well Installation Activities

Preparatory Phase
The preparatory inspection for horizontal well installation activities will include review of the construction drawings and specifications, verifying the submittal approval, confirming qualifications and schedule of the well driller, verifying that appropriate materials are present, and confirming that the appropriate equipment and geologists and/or technicians are available to complete the work. If no deficiencies are noted, work will commence.

Initial Phase
Prior to horizontal well installation activities, the SQA will complete an initial inspection of the augers to verify that they have been properly decontaminated. The locations of the horizontal wells are shown on **Figures C-5** through **C-8**. Deficiencies will be documented and corrected as necessary.

Follow-up Phase
The geologist or other technical representative will be responsible for oversight of horizontal well installation activities. The geologist or technical representative will

provide well installation oversight to verify that the work is being completed according to the technical specifications and the well details provided on the construction drawings. Attention will be placed on total well and screen depth and well materials.

Completion Phase
At the completion of horizontal well installation activities, the SQA will verify that the installation procedures have been completed in accordance with the requirements provided in the Work Plan, technical specifications, and the well details provided on the construction drawings. Deficiencies will be documented and corrected as necessary.

6.7.5 Waste Characterization Sampling

Preparatory Phase
The preparatory stage for sample collection activities includes a review of specifications, verifying Navy acceptance of the selected laboratory, and confirming that the appropriate equipment and materials are available to complete the sampling activities. The selected laboratory will be certified by the NCDEHNR. Detailed QC documentation from the laboratory analyses will be available for review. If no deficiencies are noted, work will commence.

Initial Phase
Waste characterization samples will be collected and analyzed at an approved laboratory in accordance with requirements outlined in **Section 2.1.1.2.1 Samples for Waste Characterization**. Sample collection activities including proper chain-of-custody documentation will follow the strict quality control protocols outlined in **Section 2.1.2 Field Sampling and Quality Control** and **2.1.3 Laboratory QA/QC**.

Follow-up Phase
Sample collection locations and activities will be properly documented throughout the project. Analytical reports from the approved laboratory will be reviewed for accuracy and quality. If required, data validation information from the laboratory will be reviewed to verify any discrepancies in the analytical data.

Completion Phase
At the completion of sampling activities, J.A. Jones personnel will review and tabulate laboratory data and field sampling results and present the findings to the NTR.

6.7.6 Transportation and Treatment of Petroleum-Impacted Soil and Groundwater

Preparatory Phase
The preparatory stage for transportation of petroleum-impacted soil and groundwater includes a review of the recycling or treatment facility(s) qualifications, transportation schedule for hauling material off site, and confirming that the appropriate equipment and

materials, such as non-hazardous waste manifests, are available to complete the sampling activities. If no deficiencies are noted, work will commence.

Initial Phase
Verify that the information provided on the non-hazardous waste manifest is complete and accurate including, but not limited to, generator name, date, type of material being transported, designated recycling or treatment facility, and volume and/or weight of material. Correct any discrepancies in the non-hazardous waste manifest.

Follow-up Phase
Verify that the recycling or treatment facility has accepted and treated the waste material at their facility and has sent the required completed manifest to the generator's technical representative, MCAS EAD.

Completion Phase
Confirm receipt of the certificate of recycling or treatment from the designated facility and verify that the invoice is complete and accurate.

6.7.7 System Start-Up and Operation and Maintenance

The treatment system will be started, operated, and maintained for a period of six months. Collection of vapor effluent and monitoring well samples from specified locations will be conducted as specified in **Section 2.1.1.1 Sampling Strategy**. An operation and maintenance manual will be prepared that documents sampling activities, normal operating conditions, and troubleshooting guides. A draft copy of the O&M manual will be submitted to the NTR, ROICC, and MCAS EAD for review and comment prior to system start-up.

Preparatory Phase
Prior to start-up, the specifications, submittal status, and manufacturer's operating instructions will be reviewed by the SQA and site personnel. Start-up will not begin until equipment and piping tests have been completed.

Initial Phase
The initial phase will be completed by the SQA once start-up has commenced. The SQA will note gage readings, leaks, equipment malfunctions, and other deficiencies. Deficiencies will be corrected during start-up activities.

Follow-up Phase
Technical personnel performing weekly operation and maintenance will provide oversight of the system operation and collect any necessary vapor effluent and monitoring well samples. Deficiencies will be noted and corrected. The technician will provide a weekly report to the project manager for review.

Completion Phase

At the completion of operation and maintenance activities, the treatment system will be turned over to the Navy for operation. An operation and maintenance manual will be provided. The SQA and technical personnel will verify the system is operating in accordance with the technical specifications.

6.8 LABORATORY ANALYSIS

Air, soil, water, and waste samples will be collected under the direction of a qualified Scientist or Engineer.

Sample shipping and chain of custody records will be kept on record at the J.A. Jones field office. Laboratory analysis will be performed by a laboratory approved by the State of North Carolina as defined in the J.A. Jones Contract QC Plan.

6.9 CLOSEOUT REPORT

At the completion of the project, a Closeout Report will be prepared and submitted to the ROICC. The Closeout Report will include the following information:

- Introduction
- Summary of Action
- Final Health and Safety Report
- Summary of Record Documents
- Field Changes
- Contract Modifications
- Final Documents
- Complete Set of Field Test and Analytical Results
- Off Site Transportation Manifests of Contaminated Materials
- Certificates of Treatment for Contaminated Materials
- Quality Control Summary Report

Table 6-1
Submittal Register
RAC Action for Statement of Work Design
Tank Farm C
Marine Corps Air Station
Cherry Point, North Carolina

Contract Number: N62470-93-D-3033, Delivery Order No. 050 | **Location:** MCAS Cherry Point, North Carolina | **Contractor:** J.A. Jones Environmental Services Company
Title: RAC Action for Statement of Work Design, Tank Farm C

No.	Specification Section	Material or Product	Spec. Para. No.	Approved by	Trans Control No.	Planned Submittal Date	Contractor QC Action: Action Code	Contractor QC Action: Date of Action	Contractor QC Action: Date Fwd to to Appr Auth/ Date recd from contractor	Government: Date Fwd to other reviewer	Government: Date recd from other reviewer	Government: Action Code	Government: Date of Action	Contractor: Mailed to Contr / Recd from Appr Auth	Remarks
a	b		c	d	e	f	g	h	i	j	k	l	m	n	o
	DIV 1	**General Paragraphs**													
		SD-09, Reports	---	---	---	---	---	---	---	---	---	---	---	---	---
1	01115	Work Plan Addendum - Draft	1.2.1.1	NTR	1	5/8/98		5/8/98							
2	01115	Work Plan Addendum - Final	1.2.1.1	NTR		5/22/98									
3	01115	Narrative	1.2.1.1.a	NTR	1	5/8/98		5/8/98							Section 1.0 of Work Plan
4	01115	Description of Work Tasks	1.2.1.1.a.1	NTR	1	5/8/98		5/8/98							Section 1.0 of Work Plan
5	01115	Construction Schedule	1.2.1.1.a.2	NTR	1	5/8/98		5/8/98							Appendix A of Work Plan
6	01115	Pipe Installation	1.2.1.1.a.3	NTR	1	5/8/98		5/8/98							Section 1.0 of Work Plan
7	01115	Storage, Transportation, and Treatment Reqmt.	1.2.1.1.a.4	NTR	1	5/8/98		5/8/98							Section 3.0 of Work Plan
8	01115	System Control Logic	1.2.1.1.a.5	NTR	1	5/8/98		5/8/98							Drawing E-2
9	01115	Construction Permits Required	1.2.1.1.a.6	NTR	1	5/8/98		5/8/98							Section 1.0 of Work Plan
10	01115	Technical Specification Modifications	1.2.1.1.b	NTR	1	5/8/98		5/8/98							Section 7.0 of Work Plan
11	01115	Environmental Protection Plan	1.2.1.1.f	NTR	1	5/8/98		5/8/98							Section 4.0 of Work Plan
12	01115	Health and Safety Plan	1.2.1.1.g	NTR	1	5/8/98		5/8/98							Section 5.0 of Work Plan
13	01115	Quality Control Plan	1.2.1.1.h	NTR	1	5/8/98		5/8/98							Section 6.0 of Work Plan
14	01115	Submittal Register	1.2.1.1.h.2	NTR	1	5/8/98		5/8/98							Table 6-1 of Work Plan
15	01115	Testing Laboratory Qualifications	1.2.1.1.h.3	NTR		6/12/98									Section 6.0 of Work Plan
16	01115	Sampling and Analysis Plan	1.2.1.1.i	NTR	1	5/8/98		5/8/98							Section 2.0 of Work Plan
		SD-04, Drawings	---	---	---	---	---	---	---	---	---	---	---	---	---
17	01115	Erosion Control Plan Drawings	1.2.1.1.d.1	A&E	1	5/8/98		5/8/98							Drawing C-15
18	01115	Utility Trench Details	1.2.1.1.d.2	A&E	1	5/8/98		5/8/98							Drawing C-13
19	01115	Well Details	1.2.1.1.d.3	A&E	1	5/8/98		5/8/98							Drawings C-12 and C-13
20	01115	Valve/Junction Box Details	1.2.1.1.d.4	A&E	1	5/8/98		5/8/98							Drawing C-14
21	01115	Equipment Layout Plan	1.2.1.1.d.5	A&E	1	5/8/98		5/8/98							Drawing C-11
22	01115	Process and Instrumentation Diagrams	1.2.1.1.d.6	A&E	1	5/8/98		5/8/98							Drawings C-9 and C-10
23	01115	Electrical Site and Power Plan	1.2.1.1.d.7	A&E	1	5/8/98		5/8/98							Drawing E-1
24	01115	Electrical Panel Schedule and Control Logic	1.2.1.1.d.8	A&E	1	5/8/98		5/8/98							Drawings E-1, E-2, and E-3
		SD-05, Design Data	---	---	---	---	---	---	---	---	---	---	---	---	---
25		RAC Design Drawings Calculation Briefs		A&E	1	5/8/98		5/8/98							Submitted with Draft Work Plan
		SD-18, Records	---	---	---	---	---	---	---	---	---	---	---	---	---
26	01115	As-Built Records	1.3.1.1	ROICC		12/30/98									
27	01115	Environmental Conditions Report	1.3.1.2	ROICC		6/1/98									
28	01115	Status Reports	1.3.1.3.b	Contractor		Monthly									
29	01115	QC Meeting Minutes	1.3.1.4	Contractor		Bi-weekly									
30	01115	Test Results Summary Report	1.3.1.5	NTR		As Required									Included in Close-Out Report
31	01115	Contractor Production Report (CPR)	1.3.1.6	Contractor		Daily									Submitted weekly at the QC/Production meeting
32	01115	QC Report	1.3..1.7	Contractor		Daily									Submitted weekly at the QC/Production meeting
33	01115	Rework Items List	1.3.1.8	Contractor		Monthly									
34	01115	Permits	1.3.1.9	ROICC		As Required									
35	01115	Digging Permit	1.3.1.9.b	ROICC		6/8/98									
36	01115	Contractor's Close-Out Report	1.3.1.10	NTR		12/30/98									
37	01115	Non-hazardous Waste Manifests	---	Contractor		As Required									Included in Close-Out Report

Table 6-1
Submittal Register
RAC Action for Statement of Work Design
Tank Farm C
Marine Corps Air Station
Cherry Point, North Carolina

Contract Number: N62470-93-D-3033, Delivery Order No. 050 | **Location:** MCAS Cherry Point, North Carolina | **Contractor:** J.A. Jones Environmental Services Company
Title: RAC Action for Statement of Work Design, Tank Farm C

No.	Specification Section Material or Product		Spec. Para. No.	Approved by	Trans Control No.	Planned Submittal Date	Contractor QC Action: Action Code	Contractor QC Action: Date of Action	Contractor QC Action: Date Fwd to to Appr Auth/ Date recd from contractor	Government: Date Fwd to other reviewer	Government: Date recd from other reviewer	Government: Action Code	Government: Date of Action	Contractor: Mailed to Contr / Recd from Appr Auth	Remarks
a	b		c	d	e	f	g	h	i	j	k	l	m	n	o
	DIV 2	**Transportation and Disposal of Contaminated Material**													
		SD-08, Statements	---	---	---	---	---	---	---	---	---	---	---	---	---
38	02223	Treatment Facility Permit	1.1.1.1	ROICC		6/15/98									
		SD-18, Records	---	---	---	---	---	---	---	---	---	---	---	---	---
39	02223	Shipping Manifests	1.1.2.1	Contractor		12/30/98									Included in Close-Out Report
40	02223	Delivery and Disposal Certificates	1.1.2.2	Contractor		12/30/98									Included in Close-Out Report
41	02223	Disposal Site Decontamination Certificate	1.1.2.3	Contractor		12/30/98									Included in Close-Out Report
42	02223	Work Site Decontamination Certificate	1.1.2.4	Contractor		12/30/98									Included in Close-Out Report
	DIV 2	**Excavation, Backfilling, and Compacting for Utilities**													
		SD-12, Field Test Reports	---	---	---	---	---	---	---	---	---	---	---	---	---
43	02302	Moisture-Density Test	1.3.1.1	Contractor		12/30/98									Included in Close-Out Report
	DIV 2	**Free Product Vapor Extraction System**													
		SD-02, Manufacturer's Catalog Data	---	---	---	---	---	---	---	---	---	---	---	---	---
44	02900	Well Casing	1.3.1.a	A&E		7/10/98									
45	02900	Well Screen	1.3.1.b	A&E		7/10/98									
46	02900	Header Piping	1.3.1.c	A&E		7/10/98									
47	02900	Frames and Covers	1.3.1.d	A&E		7/10/98									
		SD-04, Shop Drawings	---	---	---	---	---	---	---	---	---	---	---	---	---
48	02900	Free Product Vapor Extraction Unit	1.3.2.a	Contractor		12/2/98									
		SD-06, Instructions	---	---	---	---	---	---	---	---	---	---	---	---	---
49	02900	Directional Drilling Plan	1.3.3.a	Contractor		6/8/98									
50	02900	Start-up and Testing Plan	1.3.3.b	Contractor		10/7/98									
		SD-12, Field Test Reports	---	---	---	---	---	---	---	---	---	---	---	---	---
51	02900	Operation and Monitoring Reports	1.3.4.a	Contractor		12/2/98									
52	02900	Start-up and Testing Report	1.3.4.b	Contractor		12/2/98									
		SD-19, Operation and Maintenance Manuals	---	---	---	---	---	---	---	---	---	---	---	---	---
53	02900	Free Product Vapor Extraction Unit	1.3.5.a	A&E		12/2/98									
	DIV 2	**Soil Vapor Extraction System**													
		SD-02, Manufacturer's Catalog Data	---	---	---	---	---	---	---	---	---	---	---	---	---
54	02902	Well Casing	1.3.1.a	A&E		7/10/98									
55	02902	Well Screen	1.3.1.b	A&E		7/10/98									
56	02902	Header Piping	1.3.1.c	A&E		7/10/98									
57	02902	Frames and Covers	1.3.1.d	A&E		7/10/98									
		SD-04, Shop Drawings	---	---	---	---	---	---	---	---	---	---	---	---	---
58	02902	Soil Vapor Extraction Unit	1.3.2.a	Contractor		12/2/98									

Table o-1
Submittal Register
RAC Action for Statement of Work Design
Tank Farm C
Marine Corps Air Station
Cherry Point, North Carolina

Contract Number: N62470-93-D-3033, Delivery Order No. 050 | **Location:** MCAS Cherry Point, North Carolina | **Contractor:** J.A. Jones Environmental Services Company
Title: RAC Action for Statement of Work Design, Tank Farm C

No.	Specification Section Material or Product		Spec. Para. No.	Approved by	Trans Control No.	Planned Submittal Date	Contractor QC Action: Action Code	Contractor QC Action: Date of Action	Contractor QC Action: Date Fwd to to Appr Auth/ Date recd from contractor	Government: Date Fwd to other reviewer	Government: Date recd from other reviewer	Government: Action Code	Government: Date of Action	Contractor: Mailed to Contr / Recd from Appr Auth	Remarks
a	b		c	d	e	f	g	h	i	j	k	l	m	n	o
		SD-06, Instructions	---	---	---	---	---	---	---	---	---	---	---	---	---
59	02902	Directional Drilling Plan	1.3.3.a	Contractor		6/8/98									
60	02902	Start-up and Testing Plan	1.3.3.b	Contractor		10/7/98									
		SD-12, Field Test Reports	---	---	---	---	---	---	---	---	---	---	---	---	---
61	02902	Operation and Monitoring Reports	1.3.4.a	Contractor		12/2/98									
62	02902	Start-up and Testing Report	1.3.4.b	Contractor		12/2/98									
		SD-19, Operation and Maintenance Manuals	---	---	---	---	---	---	---	---	---	---	---	---	---
63	02902	Soil Vapor Extraction Unit	1.3.5.a	A&E		12/2/98									
	DIV 2	**Air Sparge System**													
		SD-02, Manufacturer's Catalog Data	---	---	---	---	---	---	---	---	---	---	---	---	---
64	02903	Well Casing	1.3.1.a	A&E		7/10/98									
65	02903	Well Screen	1.3.1.b	A&E		7/10/98									
66	02903	Header Piping	1.3.1.c	A&E		7/10/98									
67	02903	Frames and Covers	1.3.1.d	A&E		7/10/98									
		SD-04, Shop Drawings	---	---	---	---	---	---	---	---	---	---	---	---	---
68	02903	Air Sparge Unit	1.3.2.a	Contractor		12/2/98									
		SD-06, Instructions	---	---	---	---	---	---	---	---	---	---	---	---	---
69	02903	Directional Drilling Plan	1.3.3.a	Contractor		6/8/98									
70	02903	Start-up and Testing Plan	1.3.3.b	Contractor		10/7/98									
		SD-12, Field Test Reports	---	---	---	---	---	---	---	---	---	---	---	---	---
71	02903	Operation and Monitoring Reports	1.3.4.a	Contractor		12/2/98									
72	02903	Start-up and Testing Report	1.3.4.b	Contractor		12/2/98									
		SD-19, Operation and Maintenance Manuals	---	---	---	---	---	---	---	---	---	---	---	---	---
73	02903	Air Sparge Unit	1.3.5.a	A&E		12/2/98									
	DIV 2	**Biosparge System**													
		SD-02, Manufacturer's Catalog Data	---	---	---	---	---	---	---	---	---	---	---	---	---
74	02904	Well Casing	1.3.1.a	A&E		7/10/98									
75	02904	Well Screen	1.3.1.b	A&E		7/10/98									
76	02904	Header Piping	1.3.1.c	A&E		7/10/98									
77	02904	Frames and Covers	1.3.1.d	A&E		7/10/98									
		SD-04, Shop Drawings	---	---	---	---	---	---	---	---	---	---	---	---	---
78	02904	Biosparge Unit	1.3.2.a	Contractor		12/2/98									
		SD-06, Instructions	---	---	---	---	---	---	---	---	---	---	---	---	---
79	02904	Directional Drilling Plan	1.3.3.a	Contractor		6/8/98									
80	02904	Start-up and Testing Plan	1.3.3.b	Contractor		10/7/98									

Table 6-1
Submittal Register
RAC Action for Statement of Work Design
Tank Farm C
Marine Corps Air Station
Cherry Point, North Carolina

Contract Number: N62470-93-D-3033, Delivery Order No. 050 | **Location:** MCAS Cherry Point, North Carolina | **Contractor:** J.A. Jones Environmental Services Company
Title: RAC Action for Statement of Work Design, Tank Farm C

No.	Specification Section Material or Product		Spec. Para. No.	Approved by	Trans Control No.	Planned Submittal Date	Contractor QC Action: Action Code	Contractor QC Action: Date of Action	Contractor QC Action: Date Fwd to to Appr Auth/ Date recd from contractor	Government: Date Fwd to other reviewer	Government: Date recd from other reviewer	Government: Action Code	Government: Date of Action	Contractor: Mailed to Contr / Recd from Appr Auth	Remarks
a	b		c	d	e	f	g	h	i	j	k	l	m	n	o
		SD-12, Field Test Reports	---	---	---	---	---	---	---	---	---	---	---	---	---
81	02904	Operation and Monitoring Reports	1.3.4.a	Contractor		12/2/98									
82	02904	Start-up and Testing Report	1.3.4.b	Contractor		12/2/98									
		SD-19, Operation and Maintenance Manuals	---	---	---	---	---	---	---	---	---	---	---	---	---
83	02904	Biosparge Unit	1.3.5.a	A&E		12/2/98									
	DIV 2	**Pavement Removal and Replacement**													
		SD-05, Design Data	---	---	---	---	---	---	---	---	---	---	---	---	---
84	02951	Job Mix Formula	1.2.1.a	Contractor		As Required									
	DIV 3	**Cast-In-Place Concrete Short Form**													
		SD-06, Instructions	---	---	---	---	---	---	---	---	---	---	---	---	---
85	03300	Liquid Membrane-Forming Compounds	1.2.1.a	Contractor		As Required									
		SD-13, Certificates	---	---	---	---	---	---	---	---	---	---	---	---	---
86	03300	Concrete	1.2.2.a	Contractor		As Required									
	DIV 16	**Underground Electrical Work**													
		SD-02, Manufacturer's Catalog Data	---	---	---	---	---	---	---	---	---	---	---	---	---
87	16303	Handhole Frames and Covers	1.4.1.a	A&E		8/21/98									
88	16303	Cable Supports	1.4.1.b	A&E		8/21/98									
89	16303	Sealing Material for Precast Handhole Joints	1.4.1.c	A&E		8/21/98									
90	16303	Precast Concrete Structures	1.4.1.d	A&E		8/21/98									
		SD-04, Drawings	---	---	---	---	---	---	---	---	---	---	---	---	---
91	16303	Precast Handhole	1.4.2.a	Contractor		8/21/98									
92	16303	Pulling-in Irons	1.4.2.b	Contractor		8/21/98									
		SD-12, Field Test Reports	---	---	---	---	---	---	---	---	---	---	---	---	---
93	16303	600-volt Cable Tests	1.4.3	Contractor		12/30/98									Included in Close-Out Report
94	16303	Grounding System Tests	1.4.3	Contractor		12/30/98									Included in Close-Out Report
	DIV 16	**Interior Distribution System**													
		SD-02, Manufacturer's Catalog Data	---	---	---	---	---	---	---	---	---	---	---	---	---
95	16402	Receptacles	1.3.1.a	A&E		7/10/98									
96	16402	Circuit Breakers	1.3.1.b	A&E		7/10/98									
97	16402	Switches	1.3.1.c	A&E		7/10/98									
98	16402	Firestopping Materials	1.3.1.d	A&E		7/10/98									
		SD-04, Drawings	---	---	---	---	---	---	---	---	---	---	---	---	---
99	16402	Panelboards	1.3.2.a	Contractor		12/2/98									
		SD-08, Statements	---	---	---	---	---	---	---	---	---	---	---	---	---
100	16402	Fuses	1.3.3.a	A&E		7/10/98									

Table 6-1
Submittal Register
RAC Action for Statement of Work Design
Tank Farm C
Marine Corps Air Station
Cherry Point, North Carolina

Contract Number: N62470-93-D-3033, Delivery Order No. 050 | **Location:** MCAS Cherry Point, North Carolina | **Contractor:** J.A. Jones Environmental Services Company
Title: RAC Action for Statement of Work Design, Tank Farm C

							Contractor QC Action			Government				Contractor	
No.	Specification Section	Material or Product	Spec. Para. No.	Approved by	Trans Control No.	Planned Submittal Date	Action Code	Date of Action	Date Fwd to to Appr Auth/ Date recd from contractor	Date Fwd to other reviewer	Date recd from other reviewer	Action Code	Date of Action	Mailed to Contr / Recd from Appr Auth	Remarks
a	b		c	d	e	f	g	h	i	j	k	l	m	n	o
		SD-12, Field Test Reports	---	---	---	---	---	---	---	---	---	---	---	---	---
101	16402	600-volt Wiring Tests	1.3.4.a	Contractor		12/30/98									Included in Close-Out Report
102	16402	Grounding System Tests	1.3.4.b	Contractor		12/30/98									Included in Close-Out Report
103	16402	Firestopping Field Report	1.3.4.c	Contractor		12/30/98									Included in Close-Out Report
	DIV 16	**Apparatus Inspection and Testing**													
		SD-08, Statements	---	---	---	---	---	---	---	---	---	---	---	---	---
104	16950	Qualifications of Organization and Lead													
		Engineering Technician	1.3.1.a	A&E		12/2/98									
105	16950	Acceptance Test and Inspections Procedure	1.3.1.b	A&E		12/2/98									

Notes:
ROICC - Resident Officer in Charge of Construction
Contractor - J.A. Jones Environmental Services Company
A&E - Richard Catlin & Associates, Inc.
AN - Approved As Noted
N/A - Not Applicable

Table 6-2
Testing and Analysis Quality Control Log

RAC Action for Statement of Work Design
Tank Farm C
Marine Corps Air Station
Cherry Point, North Carolina

Spec. No.	Tests	Spec. Par. No.	Quantity	Resp.	Completion Date	Approved	Comments
02302	Fill and Backfill Material Testing	3.11	One for each material used	SQA			
02302	Select Material Testing	3.11	One for each material used	SQA			
02302	Density Tests	3.11	Each Lift / Every 200 linear feet	SQA			
02900	Free Product Vapor Extraction System Tests	3.7	After Installation	SQA			All equipment shall be tested in operation for a period of not less than 5 days. All equipment and controls shall be tested.
02902	Soil Vapor Extraction System Tests	3.7	After Installation	SQA			All equipment shall be tested in operation for a period of not less than 5 days. All equipment and controls shall be tested.
02903	Air Sparge System Tests	3.8	After Installation	SQA			All equipment shall be tested in operation for a period of not less than 5 days. All equipment and controls shall be tested.
02904	Biosparge System Tests	3.7	After Installation	SQA			All equipment shall be tested in operation for a period of not less than 5 days. All equipment and controls shall be tested.
02951	Job Mix Formula	1.2.1.1	One for each mix	SQA			
03300	Concrete Slump Test	2.1	One per Load	SQA			Slump shall be between 2 and 5 inches.
03300	Concrete Air Entrainment Test	2.1	One per Load	SQA			Entrainment shall be between 2 and 3 percent.
03300	Concrete Strength Test	2.1	Every 40 cubic yards/One per Load Minimum	SQA			Three cylinders shall be collected. One tested for 7-day compressive strength, one tested for 28-day compressive strength, and one tested if the first 28-day test results are deficient.

Table 6-2
Testing and Analysis Quality Control Log

RAC Action for Statement of Work Design
Tank Farm C
Marine Corps Air Station
Cherry Point, North Carolina

Spec. No.	Tests	Spec. Par. No.	Quantity	Resp.	Completion Date	Approved	Comments
16303	600-Volt Wiring Test	3.2.1.1	One	SQA			Applied potential shall be 1000 volts DC for one minute; minimum insulation resistance values shall not be less than 2 megaohms.
16303	Grounding System Test	3.2.1.2	One	SQA			
16402	Manual Operation Devices	3.2.1	One per Device	SQA			Each device shall be operated a minimum of five times demonstrating satisfactory operation each time.
16402	600-Volt Wiring Test	3.2.2	One	SQA			Minimum resistance shall be 250,000 ohms.
16402	Grounding System Test	3.2.4	One	SQA			

Signed: _____

Figure 6-1

CONTRACTOR PRODUCTION REPORT (ATTACH ADDITIONAL SHEETS IF NECESSARY)			DATE
CONTRACT NO. N62470-93-D-3033	D.O. #	TITLE AND LOCATION	REPORT NO.
CONTRACTOR: J. A. Jones Construction Services		SUPERINTENDENT	
AM WEATHER / PM WEATHER		MAX TEMP F / MIN TEMP F	

WORK PERFORMED TODAY

WORK LOCATION AND DESCRIPTION	EMPLOYER	NUMBER	TRADE	HRS

JOB SAFETY

WAS A JOB SAFETY MEETING HELD THIS DATE? (IF YES, attach copy of the meeting minutes)	☐ YES	☐ NO	TOTAL WORK HOURS ON JOB SITE THIS DATE
WERE THERE ANY LOST TIME ACCIDENTS THIS DATE? (IF YES, attach copy of completed OSHA report)	☐ YES	☐ NO	CUMULATIVE TOTAL OF WORK HOURS FROM PREVIOUS REPORT
WAS TRENCHING/SCAFFOLD/HV ELECTRICAL/HIGH WORK DONE ? (IF YES, attach statement or checklist showing inspection performed)	☐ YES	☐ NO	TOTAL WORK HOURS FROM START OF CONSTRUCTION
WAS HAZARDOUS MATERIAL/WASTE RELEASED INTO THE ENVIRONMENT? (IF YES, attach description of incident and proposed action)	☐ YES	☐ NO	

SAFETY ACTIONS TAKEN TODAY/SAFETY INSPECTIONS CONDUCTED

SAFETY REQUIREMENTS HAVE BEEN MET

EQUIPMENT/MATERIAL RECEIVED TODAY TO BE INCORPORATED IN JOB

CONSTRUCTION AND PLANT EQUIPMENT ON JOB SITE TODAY. INCLUDE NUMBER OF HOURS USED TODAY

REMARKS

CONTRACTORS SUPERINTENDENT

DATE

FORM C1400-13/92

SHEET OF

Figure 6-2

	CONTRACTOR QUALITY CONTROL REPORT (ATTACH ADDITIONAL SHEETS IF NECESSARY)		DATE
PHASE	Y - YES, N - NO, SEE REMARKS; BLANK - NOT APPLICABLE		IDENTIFY DEFINABLE FEATURE OF WORK, LOCATION, AND LIST PERSONNEL PRESENT
PREPARATORY	THE PLANS AND SPECS HAVE BEEN REVIEWED		
	THE SUBMITTALS HAVE BEEN APPROVED		
	MATERIALS COMPLY WITH APPROVED SUBMITTALS		
	MATERIALS ARE STORED PROPERLY		
	TESTING PLAN HAS BEEN REVIEWED		
	WORK METHOD AND SCHEDULE DISCUSSED		
INITIAL	PRELIMINARY WORK WAS DONE CORRECTLY		TESTING PERFORMED AND WHO PERFORMED TEST
	SAMPLE HAS BEEN PREPARED/APPROVED		
	WORKMANSHIP IS SATISFACTORY		
	TEST RESULTS ARE ACCEPTABLE		
	WORK IS IN COMPLIANCE WITH THE CONTRACT		
FOLLOW-UP	WORK COMPLIES WITH CONTRACT AS APPROVED IN INITIAL PHASE		TESTING PERFORMED AND WHO PERFORMED TEST

REWORK ITEMS IDENTIFIED TODAY (NOT CORRECTED BY CLOSE OF BUSINESS)	REWORK ITEMS CORRECTED TODAY (FROM REWORK ITEMS LIST)

REMARKS

On behalf of the contractor, I certify that this report is complete and correct and equipment and material used and work performed during this reporting period is in compliance with the contract drawings and specifications to the best of my knowledge except as noted in this report.

AUTHORIZED QC MANAGER AT SITE — DATE

GOVERNMENT QUALITY ASSURANCE REPORT	DATE

QUALITY ASSURANCE REPRESENTATIVE'S REMARKS AND/OR EXCEPTIONS TO THE REPORT

GOVERNMENT QUALITY CONTROL MANAGER — DATE

FORM 01400-1 3/92 (BACK) SHEET OF

Figure 6-2 (continued)

CONTRACTOR QUALITY CONTROL REPORT CONTINUATION SHEET
(ATTACH ADDITIONAL SHEETS IF NECESSARY)

DATE

CONTRACT NO. N62470-93-D-3033

REPORT NO.

PHASE	Y - YES, N - NO, SEE REMARKS; BLANK - NOT APPLICABLE		IDENTIFY DEFINABLE FEATURE OF WORK, LOCATION, AND *LIST PERSONNEL PRESENT*
PREPARATORY	THE PLANS AND SPECS HAVE BEEN REVIEWED		
	THE SUBMITTALS HAVE BEEN APPROVED		
	MATERIALS COMPLY WITH APPROVED SUBMITTALS		
	MATERIALS ARE STORED PROPERLY		
	TESTING PLAN HAS BEEN REVIEWED		
	WORK METHOD AND SCHEDULE DISCUSSED		

PHASE	Y - YES, N - NO, SEE REMARKS; BLANK - NOT APPLICABLE		IDENTIFY DEFINABLE FEATURE OF WORK, LOCATION, AND *LIST PERSONNEL PRESENT*	TESTING PERFORMED AND WHO PERFORMED TEST
INITIAL	PRELIMINARY WORK WAS DONE CORRECTLY			
	SAMPLE HAS BEEN PREPARED/APPROVED			
	WORKMANSHIP IS SATISFACTORY			
	TEST RESULTS ARE ACCEPTABLE			
	WORK IS IN COMPLIANCE WITH THE CONTRACT			

Figure 6-2 (continued)

CONTRACTOR QUALITY CONTROL REPORT CONTINUATION SHEET (ATTACH ADDITIONAL SHEETS IF NECESSARY)			DATE
CONTRACT NO.			REPORT NO.
PHASE	Y - YES; N - NO, SEE REMARKS; BLANK - NOT APPLICABLE	IDENTIFY DEFINABLE FEATURE OF WORK, LOCATION AND LIST PERSONNEL PRESENT	
FOLLOW-UP	WORK COMPLIES WITH CONTRACT AS APPROVED IN INITIAL PHASE.		TESTING PERFORMED & WHO PERFORMED TEST

Figure 6-3

J. A. JONES CONSTRUCTION SERVICES COMPANY
DEFICIENCY REPORT

CONTRACT NO.	D. O. NO.	REPORT NO.
N62470-93-D-3033		

JOB TITLE

DESCRIPTION OF NONCOMPLIANCE

Noncompliance _____

Suggested Corrective Action _____

SUPERINTENDENT NOTIFIED	DATE

QC INSPECTOR	DATE

ACTION TAKEN TO RESOLVE

CLOSING INSPECTOR	DATE

Fig 6-4

REWORK ITEMS LIST

Contract No. and Title: N62470-93-D-3033

Contractor: J. A. Jones Construction Services

NUMBER	DATE IDENTIFIED	DESCRIPTION	CONTRACT REQUIREMENT (Spec. Section and Par. No., Drawing No. and Detail No., etc.)	ACTION TAKEN BY QC MANAGER	RESOLUTION	DATE COMPLETED

Sheet of

FORM 01400-3 3/92

Figure 6-5
Project Organization Chart
Delivery Order No. 050: RAC Action for Statement of Work Design
Tank Farm C
MCAS, Cherry Point, North Carolina

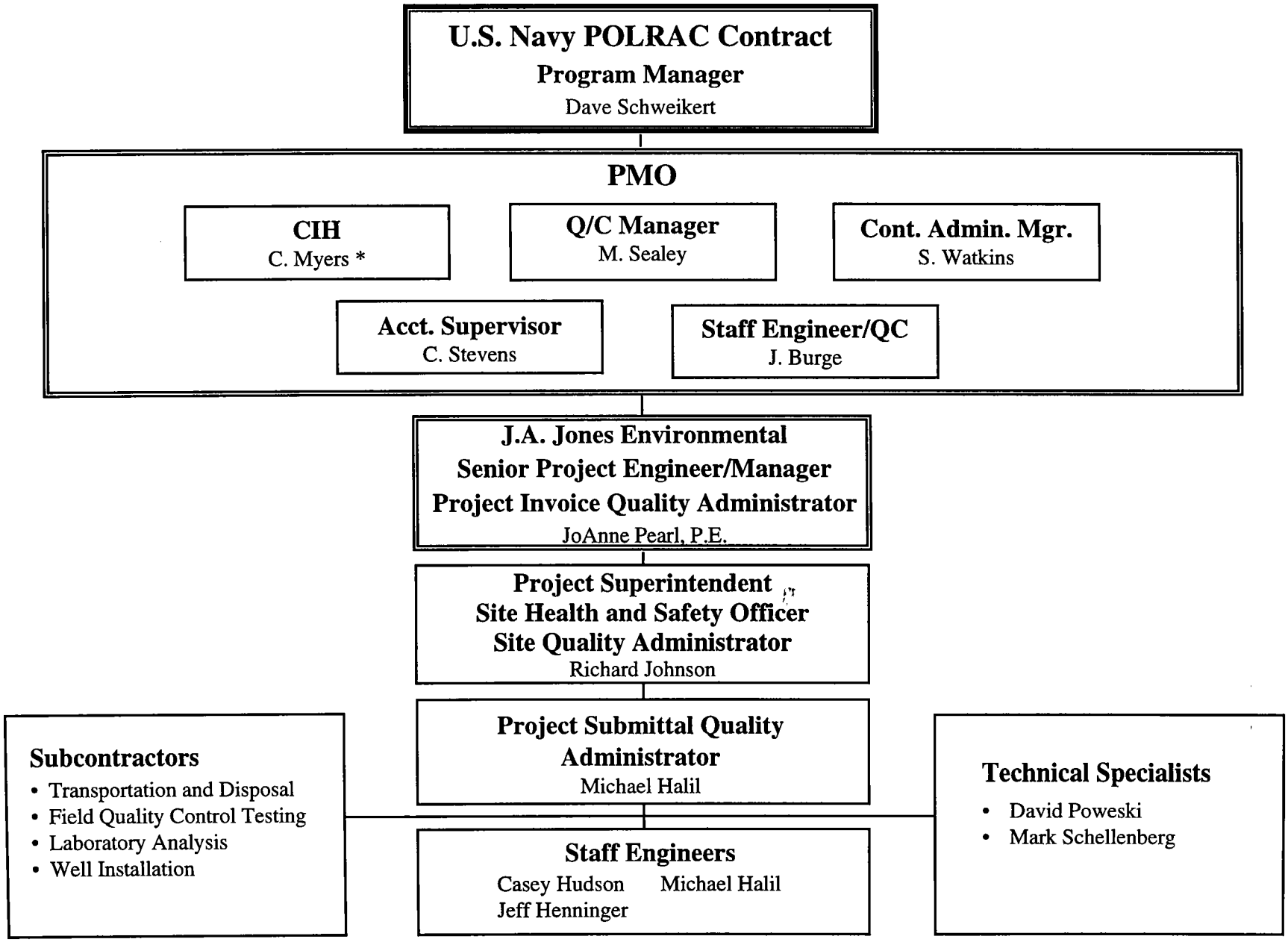

* CDM

SECTION 7.0

TECHNICAL SPECIFICATIONS

This section of the Work Plan addresses any additions or modifications to the technical specifications that are required to accurately describe the materials and work procedures to complete the work outlined in this Delivery Order. The specification sections listed in this section of the Work Plan were provided because they represent the major portions of work to be executed.

Specification No.	Title
01115	General Paragraphs
01561	Erosion and Sediment Control
01781	Operation and Maintenance Data
02222	Excavation, Removal, and Treatment of Petroleum-Contaminated Soil
02223	Transportation and Disposal of Contaminated Material
02302	Excavation, Backfilling, and Compacting for Utilities
02900	Free Product Vapor Extraction System
02902	Soil Vapor Extraction System
02903	Air Sparge System
02904	Biosparge System
02951	Pavement Removal and Replacement
03300	Cast-in-Place Concrete Short Form
16050	Basic Electrical Materials and Methods
16303	Underground Electrical Work
16402	Interior Distribution System
16950	Apparatus Inspection and Testing

7.1 TECHNICAL SPECIFICATION MODIFICATIONS

7.1.1 Automatic Drain

Centrifugal pumps will be utilized to drain the free product vapor extraction and soil vapor extraction moisture separators in lieu of the automatic drains specified in Paragraph 2.3.4, Sections 02900 and 02902 of the Delivery Order Technical Specifications. The centrifugal pumps will allow the systems to operate continuously by draining the moisture separators while the vacuum blowers are running.

7.1.2 Air Compressor

Paragraph 2.3, Section 02903 of the Delivery Order Technical Specifications specifies a positive displacement blower to generate the compressed air for the air sparge system. A rotary vane air compressor with an oil coalescing filter and air receiver will be used. The rotary vane air compressor will be more efficient and flexible in providing the compressed air at the required flow and pressure.

7.1.3 Treatment System Enclosure

The skid-mounted treatment system will be placed on a concrete pad and secured by chain-link fencing. A brick treatment system building, as specified in the Delivery Order Technical Specifications, will not be used because the treatment system is being installed in an industrial area where noise is not a factor. As a result, all treatment system components and wiring will be rated for outdoor use.

7.1.4 Submittal Register

The submittal register presented in **Section 6.0 Quality Control Plan** as **Table 6-1** was modified to include a complete listing of project deliverables.

7.2 TECHNICAL SPECIFICATION ADDITIONS

7.2.1 Horizontal Well Development Water Analytical Requirements

Sampling and analytical requirements for the horizontal well development water were added to the specifications and are based on the selected treatment facility requirements. Selection of the treatment, disposal, or recycling facility will be based on the review of the received bid submittals. According to the facility's permit, sampling and analytical requirements are based on the source of the contamination. As a result, the sampling and analytical requirements for waste characterization samples were modified based on the released contaminants. Generally for wastewater contaminated with the identified contaminants analysis would be required for USEPA 601 and 602 constituents.

A cost-effective alternative to off site treatment is conveyance of the development water to an existing operational groundwater recovery and treatment system on the Marine Corps Air Station designed to treat petroleum-impacted groundwater. Delivery to an on site groundwater recovery and treatment system, if available, will require approval by the Navy.

7.2.2 Fill Material Testing and Analyses

Fill material testing and analyses will be completed in the pipe trench excavation areas and in the vicinity of the building footprint prior to foundation placement. If necessary, any fill material obtained from the Marine Corps Air Station borrow pit or any other outside source will be tested for conformance to gradation limits, liquid and plastic limits, and moisture density relations. The required fill and backfill tests are provided in **Section 7.2.2 Backfill and Fill Material Testing**.

SECTION 8.0

CONTRACTOR GENERATED CONSTRUCTION DRAWINGS

Treatment system design drawings included in this Work Plan define the construction details and site layouts. The treatment system layouts shown on **Figures C-5** through **C-8** provide the locations of the decontamination, equipment laydown, and soil staging areas. Project work zones which include the exclusion zone, the contamination reduction zone, and the support zone will be implemented in the areas of trench excavation and horizontal well installation. A description of these work zones are provided in **Section 5.9 Work Zone and Site Control**.

A list of the design drawings, included in this Work Plan, are provided below.

Drawing No.	Title
C-1	Title Sheet with Site Location Map
C-2	General Notes and Legends
C-3	Site Environmental Conditions–Vadose Soil Contamination/Free Product Plume
C-4	Site Environmental Conditions–Dissolved Phase Contaminant Plume/Water Table Contours
C-5	Free Product Vapor Extraction System and Soil Vapor Extraction System Layout
C-6	Free Product Vapor Extraction System and Soil Vapor Extraction System Layout
C-7	Air Sparge/Biosparge System Layout
C-8	Air Sparge/Biosparge System Layout
C-9	Free Product Vapor Extraction System and Soil Vapor Extraction System Piping and Instrumentation Diagrams
C-10	Air Sparge/Biosparge System Piping and Instrumentation Diagram
C-11	Treatment System Piping and Electrical Plan
C-12	Horizontal Well and Boring Details
C-13	Free Product Vapor Extraction Well Details, Pipe Trench Details, and Bore and Jack Details
C-14	Soil Vapor Extraction, Free Product Vapor Extraction, Air Sparge, and Biosparge Well Valve Box Details
C-15	Miscellaneous Details
E-1	Power Supply Connection and Control Panel Details
E-2	Electrical Line Diagram and System Control Logic
E-3	Electrical Line Diagram and System Control Logic

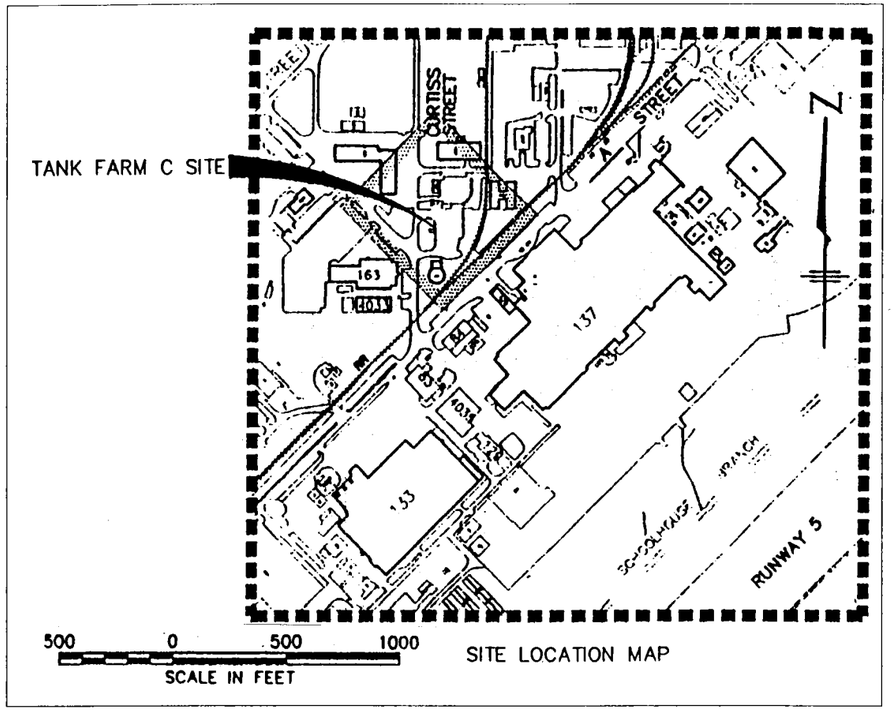

SITE LOCATION MAP

INDEX OF SHEETS

SHEET NO.	DRAWING NO.	SHEET TITLE
SHEET 1 OF 18	C-1	TITLE SHEET WITH SITE LOCATION MAP
SHEET 2 OF 18	C-2	GENERAL NOTES AND LEGENDS
SHEET 3 OF 18	C-3	SITE ENVIRONMENTAL CONDITIONS - VADOSE SOIL CONTAMINATION/ FREE PRODUCT PLUME
SHEET 4 OF 18	C-4	SITE ENVIRONMENTAL CONDITIONS - DISSOLVED PHASE CONTAMINANT PLUME/WATER TABLE CONTOURS
SHEET 5 OF 18	C-5	FREE PRODUCT VAPOR EXTRACTION SYSTEM AND SOIL VAPOR EXTRACTION SYSTEM LAYOUT
SHEET 6 OF 18	C-6	FREE PRODUCT VAPOR EXTRACTION SYSTEM AND SOIL VAPOR EXTRACTION SYSTEM LAYOUT
SHEET 7 OF 18	C-7	AIR SPARGE/BIOSPARGE SYSTEM LAYOUT
SHEET 8 OF 18	C-8	AIR SPARGE/BIOSPARGE SYSTEM LAYOUT
SHEET 9 OF 18	C-9	FREE PRODUCT VAPOR EXTRACTION SYSTEM AND SOIL VAPOR EXTRACTION SYSTEM PIPING AND INSTRUMENTATION DIAGRAMS
SHEET 10 OF 18	C-10	AIR SPARGE/BIOSPARGE SYSTEM PIPING AND INSTRUMENTATION DIAGRAM
SHEET 11 OF 18	C-11	TREATMENT SYSTEM PIPING AND ELECTRICAL PLAN
SHEET 12 OF 18	C-12	HORIZONTAL WELL AND BORING DETAILS
SHEET 13 OF 18	C-13	FREE PRODUCT VAPOR EXTRACTION WELL DETAILS, PIPE TRENCH DETAILS, AND JACK AND BORE DETAILS
SHEET 14 OF 18	C-14	SOIL VAPOR EXTRACTION, FREE PRODUCT VAPOR EXTRACTION, AIR SPARGE, AND BIOSPARGE WELL VALVE BOX DETAILS
SHEET 15 OF 18	C-15	MISCELLANEOUS DETAILS
SHEET 16 OF 18	E-1	POWER SUPPLY CONNECTION AND CONTROL PANEL DETAILS
SHEET 17 OF 18	E-2	ELECTRICAL LINE DIAGRAM AND SYSTEM CONTROL LOGIC
SHEET 18 OF 18	E-3	ELECTRICAL LINE DIAGRAM AND SYSTEM CONTROL LOGIC

NOTE:
THESE DRAWINGS ARE PREPARED AND CERTIFIED FOR CONSTRUCTION AND/OR PERMITTING PURPOSES ONLY IN COMPLIANCE WITH NCDEHNR-APPROVED CORRECTIVE ACTION PLAN (CAP).

RAC ACTION FOR STATEMENT OF WORK DESIGN
TANK FARM C
MARINE CORPS AIR STATION
CHERRY POINT, NORTH CAROLINA

SYMBOL	DESCRIPTION	DATE	APPROVED BY
	REVISIONS		

J.A. JONES ENVIRONMENTAL SERVICES JACKSONVILLE FLORIDA
A/E CONTRACT NO. N62470-93-D-3033

DEPARTMENT OF THE NAVY — NAVAL FACILITIES ENGINEERING COMMAND
NAVAL STATION ATLANTIC DIVISION NORFOLK, VIRGINIA
RAC ACTION FOR STATEMENT OF WORK DESIGN
TANK FARM C
MARINE CORPS AIR STATION
CHERRY POINT, NORTH CAROLINA
TITLE SHEET WITH SITE LOCATION MAP

CODE ID. NO. 80091 SIZE D
SCALE: N.T.S.
EFD NO.
STA. PROJ. NO.
SPEC. NO.
CONSTR. CONTR. NO. N62470-93-D-3033
NAVFAC DRAWING NO.
SHEET 1 OF 18
C-1

GENERAL CONSTRUCTION NOTES

1. LOCATION OF EXISTING UTILITIES SHOWN ARE APPROXIMATE. CONTRACTOR IS RESPONSIBLE FOR LOCATING AND VERIFYING LOCATION OF ALL UTILITIES WITHIN LIMITS TO BE AFFECTED BY CONSTRUCTION.
2. CONTRACTOR TO BE RESPONSIBLE FOR FURNISHING ALL FIELD INFORMATION REQUIRED FOR PREPARATION OF RECORD DRAWINGS BY MAINTAINING A SET OF DRAWINGS IN THE FIELD CURRENT WITH DAILY PROGRESS OF WORK.
3. REFER TO PIPE SPECIFICATIONS FOR TYPE, TESTING REQUIREMENTS, MATERIAL, AND DESIGN CONDITIONS FOR INDIVIDUAL PIPE RUNS.
4. ALL SCREWED PIPE CONNECTIONS TO BE MADE BY WRAPPING MALE THREAD WITH TEFLON TAPE PRIOR TO ASSEMBLY. ALL PVC SOCKET TYPE CONNECTIONS TO BE MADE USING SOLVENT WELDING CEMENT ASTM-D2564.
5. ALL PAVEMENT AND CONCRETE CUTS TO BE SMOOTH EDGE SAW CUTS BY CIRCULAR SAW BLADE TYPE CUTTING MACHINE OR CORE DRILLED TO PREVENT CHIPPING OF EXISTING CONCRETE.
6. ALL PAVEMENT AREAS DISTURBED BY TRENCHING TO BE REPLACED IN KIND BY ASPHALT PAVEMENT. ALL GRASSED AREAS DISTURBED BY TRENCHING TO BE REPLACED IN KIND WITH SEED PER SPECIFICATIONS.
7. ALL SOIL BACKFILL TO BE COMPACTED TO 85% OF ASTM D 698 UNLESS OTHERWISE NOTED IN SPECIFICATIONS, OR APPROVED BY NAVY REPRESENTATIVE.
8. ELECTRICAL CONDUIT TO BE MARKED IN TRENCH BY USE OF METAL LOCATING TAPE.
9. CONTRACTOR TO COORDINATE ALL OPENINGS, SLEEVES, DEPRESSIONS, BOLTS, AND OTHER EMBEDMENTS AS ON ALL DRAWINGS AND AS REQUIRED BY ALL TRADES.
10. ALL BURIED LINES TO BE A MINIMUM OF 30 INCHES BELOW GRADE UNLESS OTHERWISE SPECIFIED.
11. NON-SHRINK GROUT TO BE USED WHEN FILLING PIPE SLEEVE PENETRATION VOIDS AND FOR LEVELING PROCESS EQUIPMENT AND PUMPS.
12. PLACEMENT OF GAUGES, INSTRUMENTATION, AND METERS TO BE IN SUCH A MATTER THAT THEY ARE EASILY VISIBLE AND ACCESSIBLE.

GENERAL ABBREVIATIONS

ARV	AIR RELIEF VALVE
AS	AIR SPARGE
BS	BIOSPARGE
BV	BALL VALVE
CV	CHECK VALVE
DPI	DIFFERENTIAL PRESSURE INDICATOR
FPVE	FREE PRODUCT VAPOR EXTRACTION
G	GREEN RUNNING LIGHT
GV	GATE VALVE
HS	HAND SWITCH
LAH	LEVEL ALARM HIGH
LAHH	LEVEL ALARM HIGH-HIGH
LSH	LEVEL SWITCH HIGH
LSHH	LEVEL SWITCH HIGH-HIGH
LSL	LEVEL SWITCH LOW
MW	MONITORING WELL
N.T.S.	NOT TO SCALE
PE	POLYETHYLENE
PI	PRESSURE INDICATOR
PT	PITOT TUBE
PVC	POLYVINYL CHLORIDE
R	RED ALARM LIGHT
SP	SAMPLE PORT
SVE	SOIL VAPOR EXTRACTION
VI	VACUUM INDICATOR

SITE UTILITIES LEGEND

EXISTING	NEW	
		BUILDING
S		STEAM LINE
SS MH		SANITARY SEWER WITH MANHOLE
SD		STORM DRAIN
FM		FORCE MAIN
W		WATERLINE W/VALVE
PP P		POWER LINE W/POLE
UP MH		UNDERGROUND POWER WITH MANHOLE
COM MH		COMMUNICATIONS LINE WITH MANHOLE
FH		FIRE HYDRANT
MH		MANHOLE
		POWER TRANSFORMER
		AREA LIGHT
		CATCH BASIN
CO		CLEAN OUT
24		GROUND SURFACE CONTOUR
		CHAIN LINK FENCE
		TYPE I WELL
		TYPE II WELL
		TYPE III WELL
		PUMPING WELL
HP-7		HYDROPUNCH

PIPING SYMBOLS

	INSTRUMENT SUPPLY OR CONNECTION TO PROCESS
	ELECTRICAL SIGNAL
	LOGIC CONNECTION
3"	GATE VALVE (SIZE INDICATED IF NOT LINE SIZE)
	CHECK VALVE
	BALL VALVE
	PRESSURE SAFETY RELIEF VALVE
3 x 2	INDICATES LINE SIZE REDUCTION
	PRESSURE REGULATOR
PI	PRESSURE REGULATOR WITH PRESSURE GAUGE
	SAMPLE PORT

SECTION OR DETAIL IDENTIFICATION SYMBOL

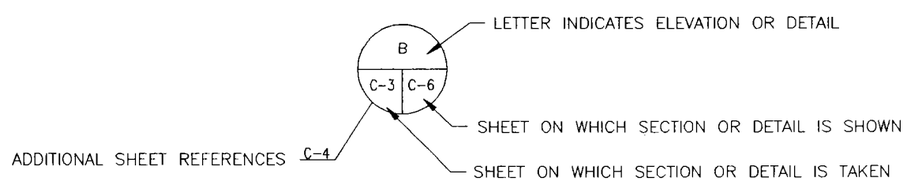

REVISIONS

SYMBOL	DESCRIPTION	DATE	APPROVED BY

J.A. JONES ENVIRONMENTAL SERVICES JACKSONVILLE, FLORIDA

A/E CONTRACT NO. N62470-93-D-3033

ACTIVITY - SATISFACTORY TO: DATE

FOR USE FOR CONSTRUCTION UNTIL: DATE

DESIGN ENGINEER: DATE: BY: DESIGN: CHECK: REVIEW: PROJECT MANAGER: CHIEF ARCHITECT: FIRE PROTECTION: QUALITY CONTROL: BRANCH MANAGER:

DEPARTMENT OF THE NAVY NAVAL FACILITIES ENGINEERING COMMAND
NAVAL STATION ATLANTIC DIVISION NORFOLK, VIRGINIA

RAC ACTION FOR STATEMENT OF WORK DESIGN
TANK FARM C
MARINE CORPS AIR STATION
CHERRY POINT, NORTH CAROLINA

GENERAL NOTES AND LEGENDS

CODE ID. NO. 80091	SIZE D
SCALE: N.T.S.	
EFD NO.	
STA. PROJ. NO.	
SPEC. NO.	
CONSTR. CONTR. NO. N62470-93-D-3033	
NAVFAC DRAWING NO.	
SHEET 2 OF 18	
C-2	

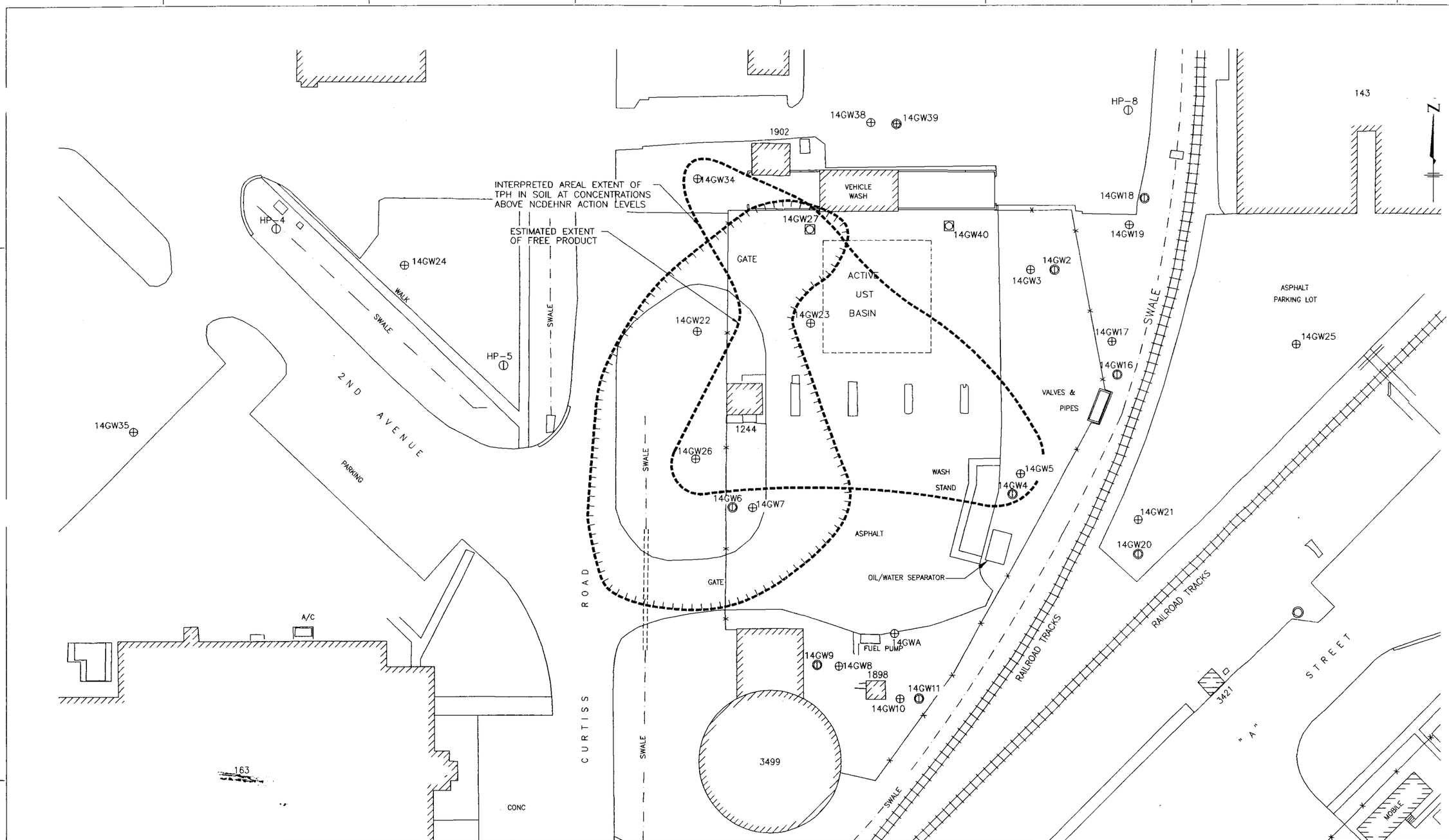

NOTE:
SITE LAYOUT AND ENVIRONMENTAL CONDITIONS, SHOWN HERE, OBTAINED FROM CORRECTIVE ACTION PLAN PREPARED BY RICHARD CATLIN & ASSOCIATES, INC. (CORRECTIVE ACTION PLAN FOR TANK FARM-C MARINE CORPS AIR STATION, CHERRY POINT CRAVEN COUNTY, NORTH CAROLINA, DECEMBER 12, 1995).

LEGEND

EXISTING	DESCRIPTION
	BUILDING
	TYPE I WELL
	TYPE II WELL
	TYPE III WELL
	HYDROPUNCH
	PUMPING WELL

25 0 25 50
SCALE IN FEET

REVISIONS

SYMBOL	DESCRIPTION	DATE	APPROVED BY

J.A. JONES ENVIRONMENTAL SERVICES JACKSONVILLE, FLORIDA

A/E CONTRACT NO. N62470-93-D-3033

ACTIVITY - SATISFACTORY TO: DATE

TITLE OF DRAWING (MAX. 40 CHARS.)

DEPARTMENT OF THE NAVY NAVAL FACILITIES ENGINEERING COMMAND
NAVAL STATION ATLANTIC DIVISION NORFOLK, VIRGINIA

RAC ACTION FOR STATEMENT OF WORK DESIGN
TANK FARM C
MARINE CORPS AIR STATION
CHERRY POINT, NORTH CAROLINA

SITE ENVIRONMENTAL CONDITIONS - VADOSE SOIL CONTAMINATION/FREE PRODUCT PLUME

CODE ID. NO. 80091 SIZE D
SCALE: 1"=25'
EFD NO.
STA. PROJ. NO.
SPEC. NO.
CONSTR. CONTR. NO. N62470-93-D-3033
NAVFAC DRAWING NO.
SHEET 3 OF 18
C-3

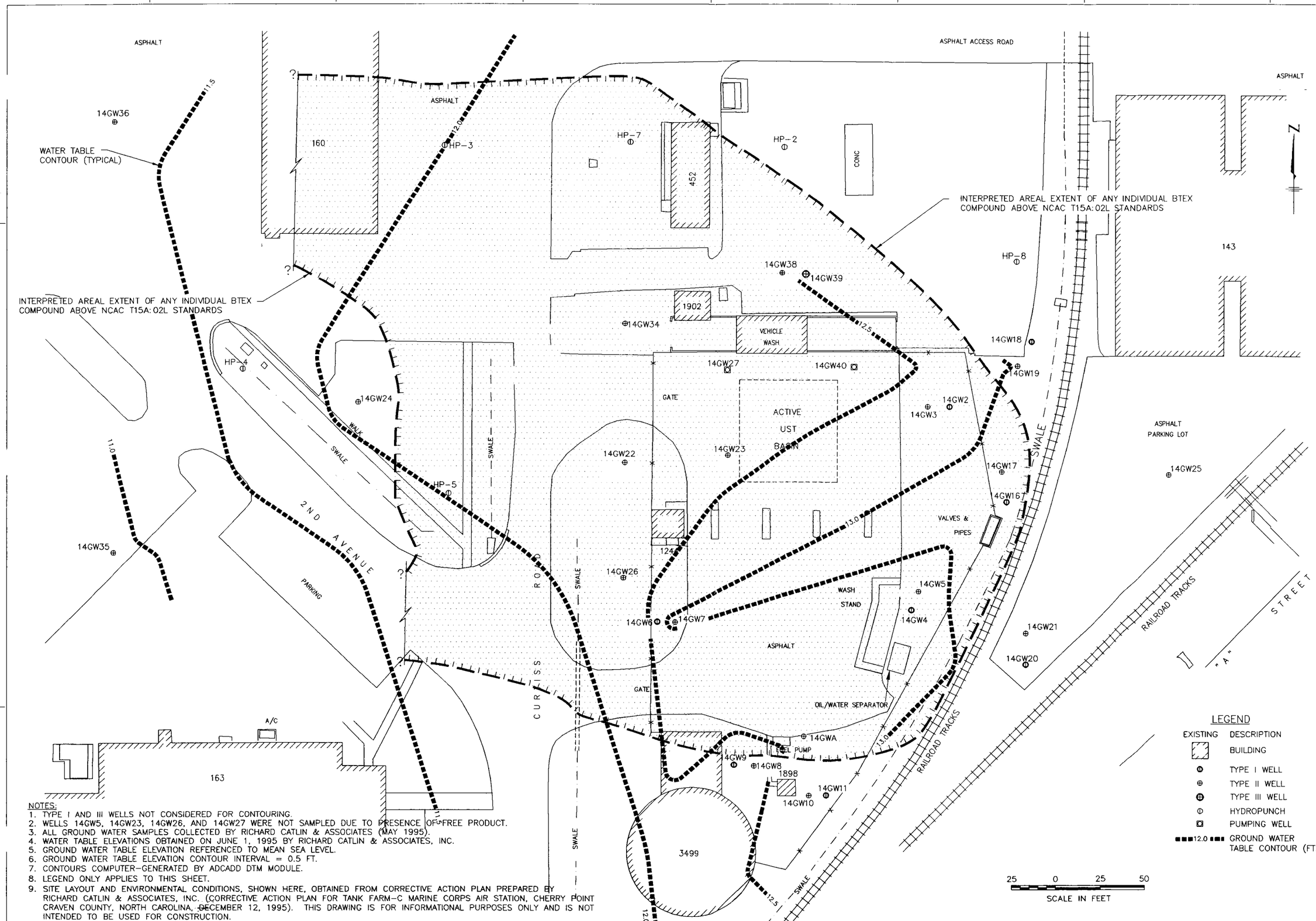

NOTES:
1. TYPE I AND III WELLS NOT CONSIDERED FOR CONTOURING.
2. WELLS 14GW5, 14GW23, 14GW26, AND 14GW27 WERE NOT SAMPLED DUE TO PRESENCE OF FREE PRODUCT.
3. ALL GROUND WATER SAMPLES COLLECTED BY RICHARD CATLIN & ASSOCIATES (MAY 1995).
4. WATER TABLE ELEVATIONS OBTAINED ON JUNE 1, 1995 BY RICHARD CATLIN & ASSOCIATES, INC.
5. GROUND WATER TABLE ELEVATION REFERENCED TO MEAN SEA LEVEL.
6. GROUND WATER TABLE ELEVATION CONTOUR INTERVAL = 0.5 FT.
7. CONTOURS COMPUTER-GENERATED BY ADCADD DTM MODULE.
8. LEGEND ONLY APPLIES TO THIS SHEET.
9. SITE LAYOUT AND ENVIRONMENTAL CONDITIONS, SHOWN HERE, OBTAINED FROM CORRECTIVE ACTION PLAN PREPARED BY RICHARD CATLIN & ASSOCIATES, INC. (CORRECTIVE ACTION PLAN FOR TANK FARM-C MARINE CORPS AIR STATION, CHERRY POINT CRAVEN COUNTY, NORTH CAROLINA, DECEMBER 12, 1995). THIS DRAWING IS FOR INFORMATIONAL PURPOSES ONLY AND IS NOT INTENDED TO BE USED FOR CONSTRUCTION.

SYMBOL	DESCRIPTION	DATE	APPROVED BY
	REVISIONS		

J.A. JONES ENVIRONMENTAL SERVICES JACKSONVILLE FLORIDA

J/E CONTRACT NO. N62470-93-D-3033

ACTIVITY - SATISFACTORY TO: DATE

DEPARTMENT OF THE NAVY — NAVAL FACILITIES ENGINEERING COMMAND
NAVAL STATION ATLANTIC DIVISION NORFOLK, VIRGINIA

RAC ACTION FOR STATEMENT OF WORK DESIGN
TANK FARM C
MARINE CORPS AIR STATION
CHERRY POINT, NORTH CAROLINA

SITE ENVIRONMENTAL CONDITIONS - DISSOLVED PHASE CONTAMINANT PLUME/ WATER TABLE CONTOURS

CODE ID. NO. 80091 | SIZE D
SCALE: 1"=25'
EFD NO.
STA. PROJ. NO.
SPEC. NO.
CONSTR. CONTR. NO. N62470-93-D-3033
NAVFAC DRAWING NO.
SHEET 4 OF 18
C-4

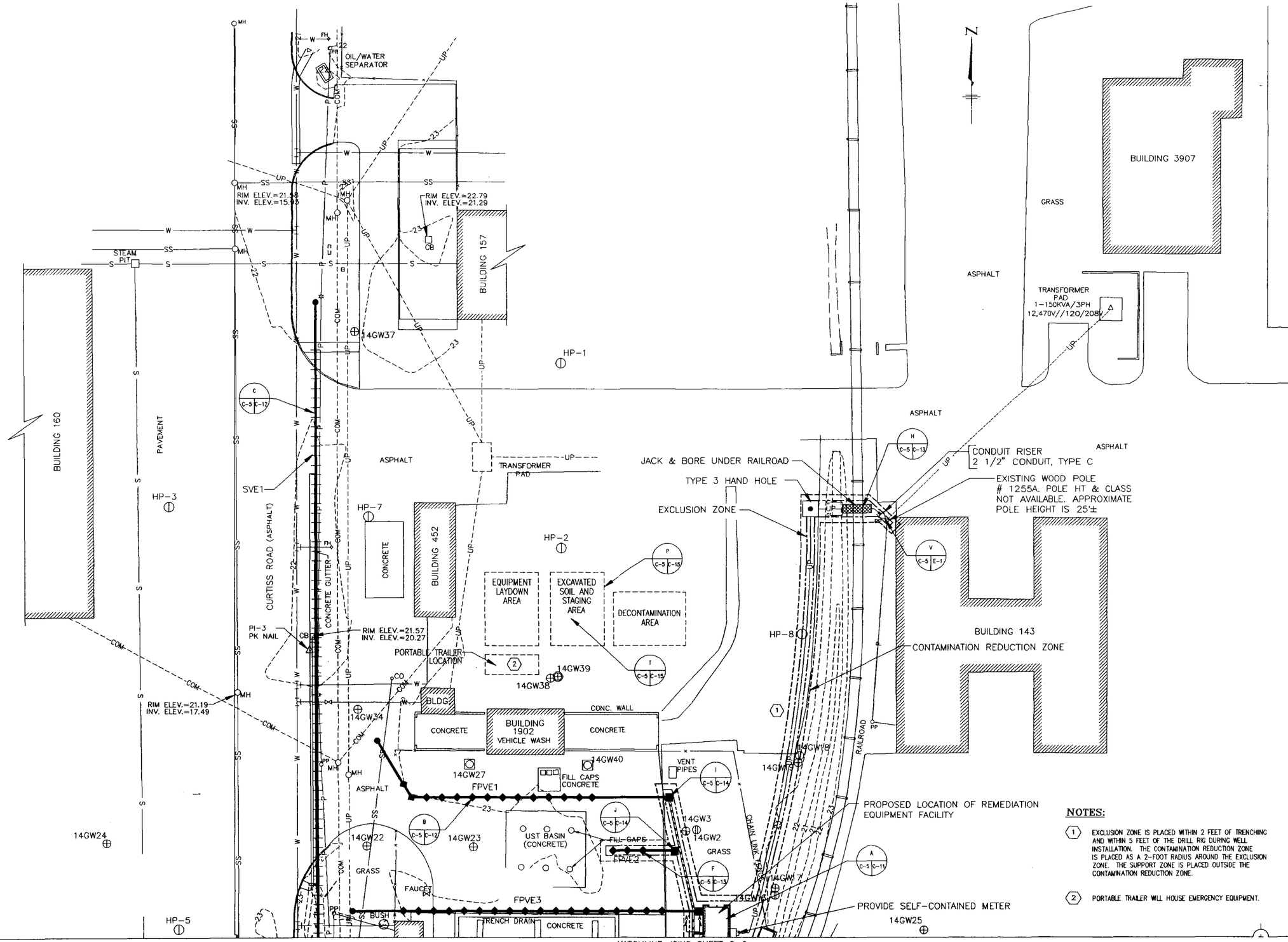

MATCHLINE JOINS SHEET C-6

NOTE: SEE SHEET C-6 FOR LEGEND AND BENCHMARKS

NOTES:

1. EXCLUSION ZONE IS PLACED WITHIN 2 FEET OF TRENCHING AND WITHIN 5 FEET OF THE DRILL RIG DURING WELL INSTALLATION. THE CONTAMINATION REDUCTION ZONE IS PLACED AS A 2-FOOT RADIUS AROUND THE EXCLUSION ZONE. THE SUPPORT ZONE IS PLACED OUTSIDE THE CONTAMINATION REDUCTION ZONE.
2. PORTABLE TRAILER WILL HOUSE EMERGENCY EQUIPMENT.

SYMBOL	DESCRIPTION	DATE	APPROVED BY
	REVISIONS		

J.A. JONES ENVIRONMENTAL SERVICES JACKSONVILLE, FLORIDA

A/E CONTRACT NO. N62470-93-D-3033

ACTIVITY - SATISFACTORY TO: DATE

DEPARTMENT OF THE NAVY — NAVAL FACILITIES ENGINEERING COMMAND
NAVAL STATION — ATLANTIC DIVISION — NORFOLK, VIRGINIA

RAC ACTION FOR STATEMENT OF WORK DESIGN
TANK FARM C
MARINE CORPS AIR STATION
CHERRY POINT, NORTH CAROLINA

FREE PRODUCT VAPOR EXTRACTION SYSTEM AND SOIL VAPOR EXTRACTION SYSTEM LAYOUT

CODE ID. NO. 80091	SIZE D
SCALE:	1"=25'
EFD NO.	
STA. PROJ. NO.	
SPEC. NO.	
CONSTR. CONTR. NO.	N62470-93-D-3033
NAVFAC DRAWING NO.	
SHEET 5 OF 18	
	C-5

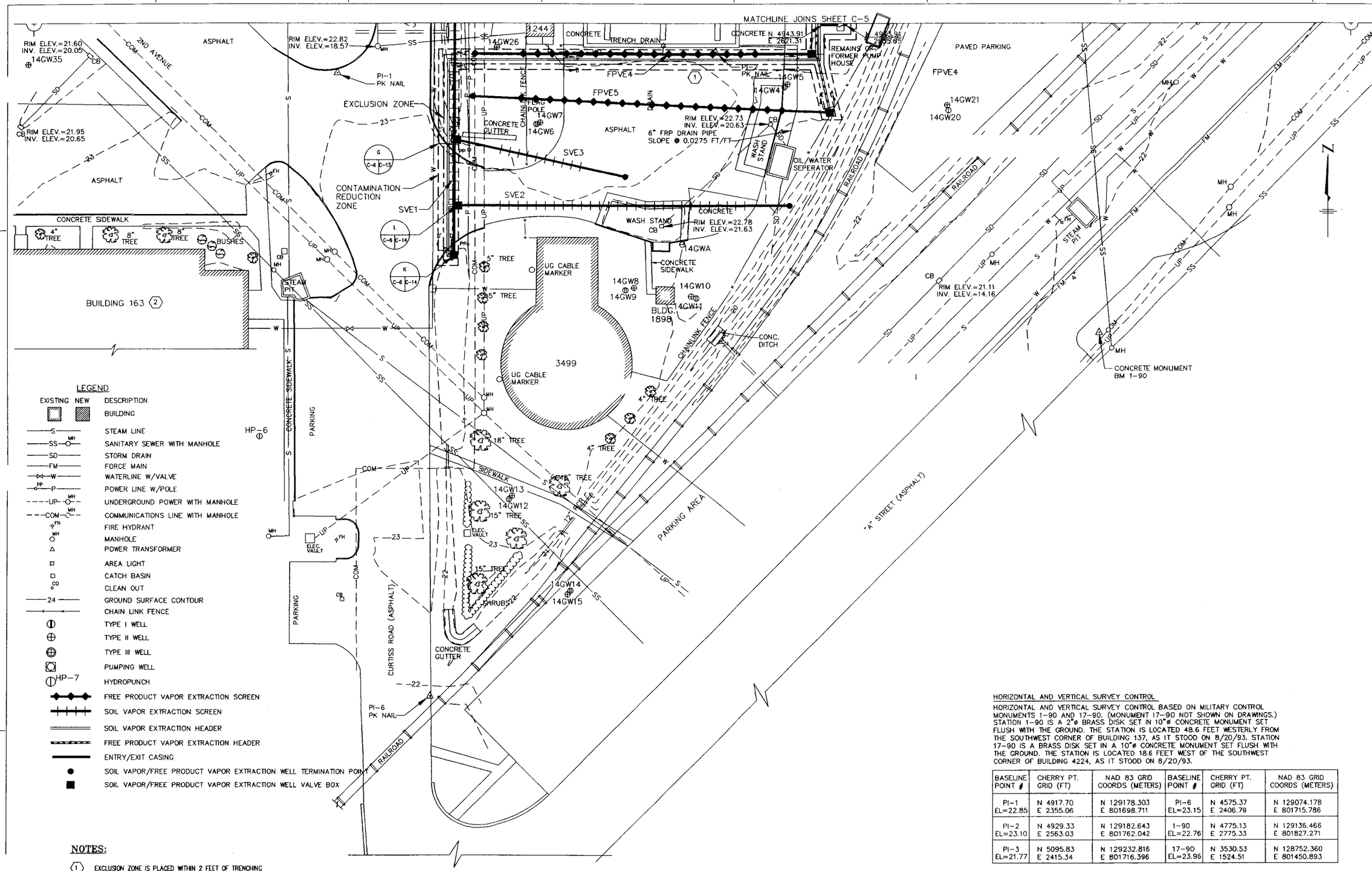

LEGEND

EXISTING	NEW	DESCRIPTION
		BUILDING
—S—		STEAM LINE
—SS—MH		SANITARY SEWER WITH MANHOLE
—SD—		STORM DRAIN
—FM—		FORCE MAIN
—W—		WATERLINE W/VALVE
—P— PP		POWER LINE W/POLE
—UP—MH		UNDERGROUND POWER WITH MANHOLE
—COM—MH		COMMUNICATIONS LINE WITH MANHOLE
FH		FIRE HYDRANT
MH		MANHOLE
		POWER TRANSFORMER
		AREA LIGHT
		CATCH BASIN
CO		CLEAN OUT
—24—		GROUND SURFACE CONTOUR
		CHAIN LINK FENCE
		TYPE I WELL
		TYPE II WELL
		TYPE III WELL
		PUMPING WELL
HP-7		HYDROPUNCH
		FREE PRODUCT VAPOR EXTRACTION SCREEN
		SOIL VAPOR EXTRACTION SCREEN
		SOIL VAPOR EXTRACTION HEADER
		FREE PRODUCT VAPOR EXTRACTION HEADER
		ENTRY/EXIT CASING
		SOIL VAPOR/FREE PRODUCT VAPOR EXTRACTION WELL TERMINATION POINT
		SOIL VAPOR/FREE PRODUCT VAPOR EXTRACTION WELL VALVE BOX

NOTES:

(1) EXCLUSION ZONE IS PLACED WITHIN 2 FEET OF TRENCHING AND WITHIN 5 FEET OF THE DRILL RIG DURING WELL INSTALLATION. THE CONTAMINATION REDUCTION ZONE IS PLACED AS A 2-FOOT RADIUS AROUND THE EXCLUSION ZONE. THE SUPPORT ZONE IS PLACED OUTSIDE THE CONTAMINATION REDUCTION ZONE.

(2) BUILDING 163 WILL BE UTILIZED AS THE SITE REFUGE AREA.

25 0 25 50
SCALE IN FEET

HORIZONTAL AND VERTICAL SURVEY CONTROL

HORIZONTAL AND VERTICAL SURVEY CONTROL BASED ON MILITARY CONTROL MONUMENTS 1-90 AND 17-90. (MONUMENT 17-90 NOT SHOWN ON DRAWINGS.) STATION 1-90 IS A 2"ø BRASS DISK SET IN 10"ø CONCRETE MONUMENT SET FLUSH WITH THE GROUND. THE STATION IS LOCATED 48.6 FEET WESTERLY FROM THE SOUTHWEST CORNER OF BUILDING 137, AS IT STOOD ON 8/20/93. STATION 17-90 IS A BRASS DISK SET IN A 10"ø CONCRETE MONUMENT SET FLUSH WITH THE GROUND. THE STATION IS LOCATED 18.6 FEET WEST OF THE SOUTHWEST CORNER OF BUILDING 4224, AS IT STOOD ON 8/20/93.

BASELINE POINT #	CHERRY PT. GRID (FT)	NAD 83 GRID COORDS (METERS)	BASELINE POINT #	CHERRY PT. GRID (FT)	NAD 83 GRID COORDS (METERS)
PI-1 EL=22.85	N 4917.70 E 2355.06	N 129178.303 E 801698.711	PI-6 EL=23.15	N 4575.37 E 2406.79	N 129074.178 E 801715.786
PI-2 EL=23.10	N 4929.33 E 2563.03	N 129182.643 E 801762.042	1-90 EL=22.76	N 4775.13 E 2775.33	N 129136.466 E 801827.271
PI-3 EL=21.77	N 5095.83 E 2415.34	N 129232.816 E 801716.396	17-90 EL=23.96	N 3530.53 E 1524.51	N 128752.360 E 801450.893

NOTES:
1. DETERMINE HORIZONTAL AND VERTICAL LOCATION OF ALL CROSSING UTILITIES PRIOR TO CONSTRUCTION AND COORDINATE WITH ROICC NTR.
2. ALL ELEVATIONS IN FEET, BASED ON NGVD 1929.

REVISIONS

SYMBOL	DESCRIPTION	DATE	APPROVED BY

J.A. JONES
ENVIRONMENTAL SERVICES
JACKSONVILLE, FLORIDA
N.A.E. CONTRACT NO. N62470-93-D-3033

DEPARTMENT OF THE NAVY — NAVAL FACILITIES ENGINEERING COMMAND
NAVAL STATION — ATLANTIC DIVISION — NORFOLK, VIRGINIA

RAC ACTION FOR STATEMENT OF WORK DESIGN
TANK FARM C
MARINE CORPS AIR STATION
CHERRY POINT, NORTH CAROLINA

FREE PRODUCT VAPOR EXTRACTION SYSTEM AND SOIL VAPOR EXTRACTION SYSTEM LAYOUT

CODE ID. NO. 80091 | SIZE D
SCALE: 1"=25'
EFD NO.
STA. PROJ. NO.
SPEC NO.
CONSTR. CONTR. NO. N62470-93-D-3033
NAVFAC DRAWING NO.
SHEET 6 OF 18
C-6

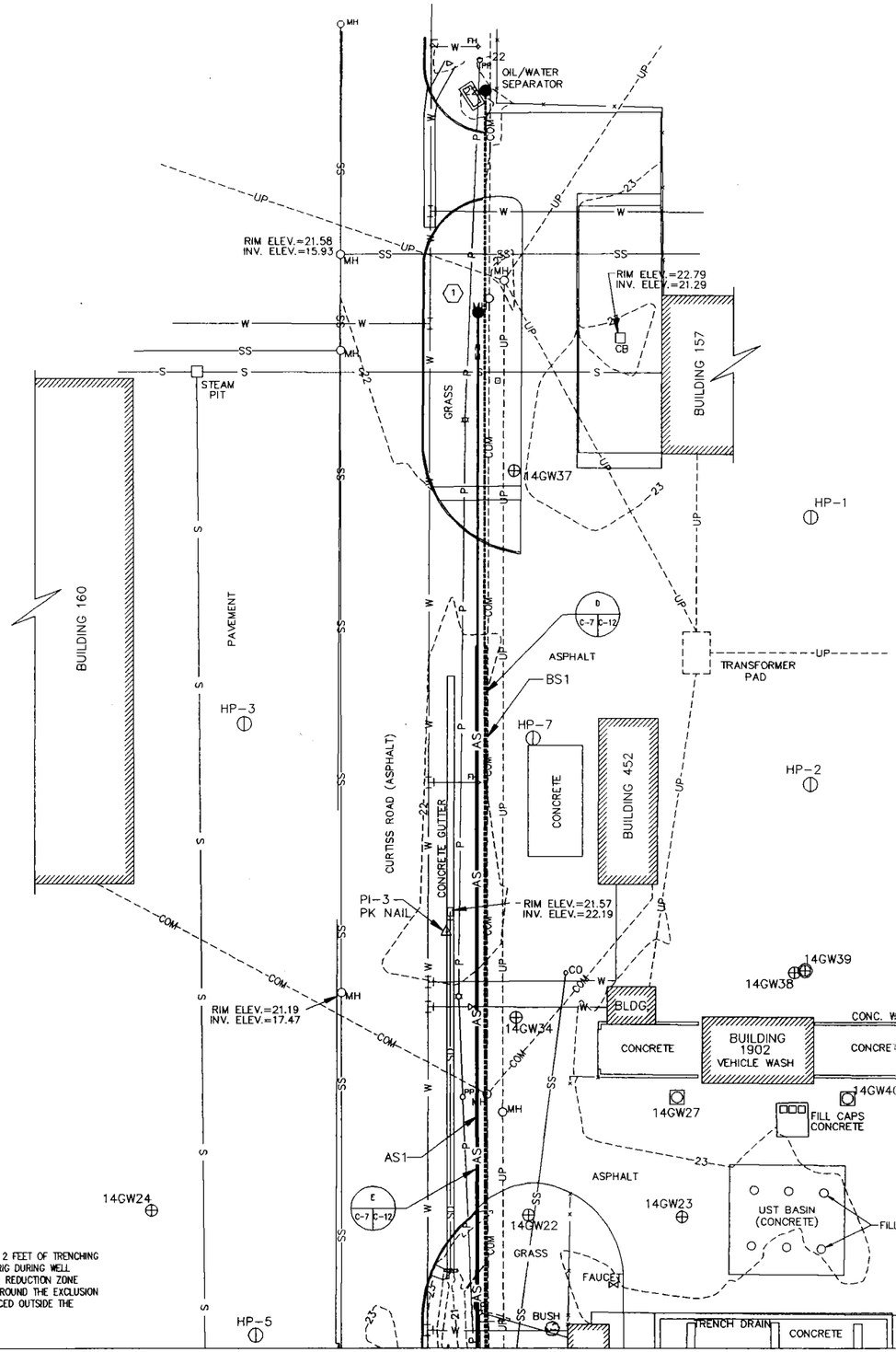

LEGEND

EXISTING	NEW	DESCRIPTION
		BUILDING
—S—		STEAM LINE
—SS—MH		SANITARY SEWER WITH MANHOLE
—SD—		STORM DRAIN
—FM—		FORCE MAIN
—W—		WATERLINE W/VALVE
PP —P—		POWER LINE W/POLE
—UP—MH		UNDERGROUND POWER WITH MANHOLE
—COM—MH		COMMUNICATIONS LINE WITH MANHOLE
FH		FIRE HYDRANT
MH		MANHOLE
		POWER TRANSFORMER
		AREA LIGHT
		CATCH BASIN
CO		CLEAN OUT
—24—		GROUND SURFACE CONTOUR
—x—x—		CHAIN LINK FENCE
		TYPE I WELL
		TYPE II WELL
		TYPE III WELL
		PUMPING WELL
HP-7		HYDROPUNCH
		AIR SPARGE ENTRY/EXIT CASING
—AS—		AIR SPARGE SCREEN
		BIOSPARGE ENTRY/EXIT CASING
		BIOSPARGE SCREEN
		AIR SPARGE/BIOSPARGE WELL VALVE BOX
		AIR SPARGE/BIOSPARGE WELL TERMINATION POINT
		AIR SPARGE/BIOSPARGE HEADER

N

HORIZONTAL AND VERTICAL SURVEY CONTROL

HORIZONTAL AND VERTICAL SURVEY CONTROL BASED ON MILITARY CONTROL MONUMENTS 1-90 AND 17-90. (MONUMENT 17-90 NOT SHOWN ON DRAWINGS.) STATION 1-90 IS A 2"ø BRASS DISK SET IN 10"ø CONCRETE MONUMENT SET FLUSH WITH THE GROUND. THE STATION IS LOCATED 48.6 FEET WESTERLY FROM THE SOUTHWEST CORNER OF BUILDING 137, AS IT STOOD ON 8/20/93. STATION 17-90 IS A BRASS DISK SET IN A 10"ø CONCRETE MONUMENT SET FLUSH WITH THE GROUND. THE STATION IS LOCATED 18.6 FEET WEST OF THE SOUTHWEST CORNER OF BUILDING 4224, AS IT STOOD ON 8/20/93.

BASELINE POINT #	CHERRY PT. GRID (FT)	NAD 83 GRID COORDS (METERS)	BASELINE POINT #	CHERRY PT. GRID (FT)	NAD 83 GRID COORDS (METERS)
PI-1 EL=22.85	N 4917.70 E 2355.06	N 129178.303 E 801698.711	PI-6 EL=23.15	N 4575.37 E 2406.79	N 129074.178 E 801715.786
PI-2 EL=23.10	N 4929.33 E 2563.03	N 129182.643 E 801762.042	1-90 EL=22.76	N 4775.13 E 2775.33	N 129136.466 E 801827.271
PI-3 EL=21.77	N 5095.83 E 2415.34	N 129232.816 E 801716.396	17-90 EL=23.96	N 3530.53 E 1524.51	N 128752.360 E 801450.893

NOTES:
1. DETERMINE HORIZONTAL AND VERTICAL LOCATION OF ALL CROSSING UTILITIES PRIOR TO CONSTRUCTION AND COORDINATE WITH ROICC NTR.
2. ALL ELEVATIONS IN FEET, BASED ON NGVD 1929.

NOTES:

(1) EXCLUSION ZONE IS PLACED WITHIN 2 FEET OF TRENCHING AND WITHIN 5 FEET OF THE DRILL RIG DURING WELL INSTALLATION. THE CONTAMINATION REDUCTION ZONE IS PLACED AS A 2-FOOT RADIUS AROUND THE EXCLUSION ZONE. THE SUPPORT ZONE IS PLACED OUTSIDE THE CONTAMINATION REDUCTION ZONE.

25 0 25 50
SCALE IN FEET

SYMBOL	DESCRIPTION	DATE	APPROVED BY

REVISIONS

J.A. JONES ENVIRONMENTAL SERVICES JACKSONVILLE, FLORIDA

A/E CONTRACT NO: N62470-93-D-3033

DEPARTMENT OF THE NAVY — NAVAL FACILITIES ENGINEERING COMMAND
NAVAL STATION — ATLANTIC DIVISION — NORFOLK, VIRGINIA

RAC ACTION FOR STATEMENT OF WORK DESIGN
MARINE CORPS AIR STATION
TANK FARM C
CHERRY POINT, NORTH CAROLINA

AIR SPARGE/BIOSPARGE SYSTEM LAYOUT

CODE ID. NO. 80091 SIZE D
SCALE: 1" = 25'
EFD NO.
STA. PROJ. NO.
SPEC. NO.
CONSTR. CONTR. NO. N62470-93-D-3033
NAVFAC DRAWING NO.
SHEET 7 OF 18
C-7

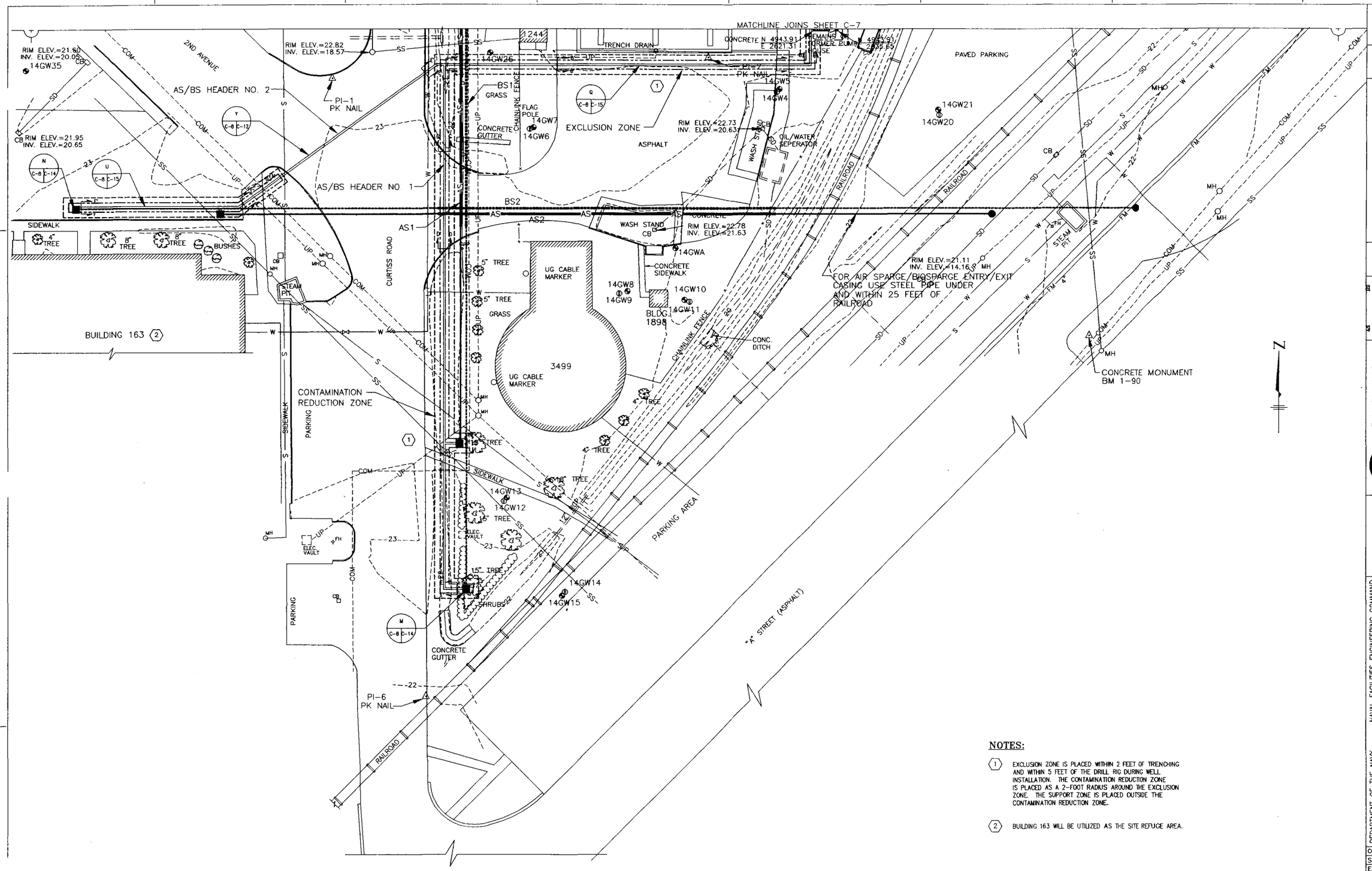

NOTES:

1. EXCLUSION ZONE IS PLACED WITHIN 2 FEET OF TRENCHING AND WITHIN 5 FEET OF THE DRILL RIG DURING WELL INSTALLATION. THE CONTAMINATION REDUCTION ZONE IS PLACED AS A 2-FOOT RADIUS AROUND THE EXCLUSION ZONE. THE SUPPORT ZONE IS PLACED OUTSIDE THE CONTAMINATION REDUCTION ZONE.
2. BUILDING 163 WILL BE UTILIZED AS THE SITE REFUGE AREA.

25 0 25 50
SCALE IN FEET

NOTE: SEE SHEET C-7 FOR LEGEND AND BENCHMARKS

SYMBOL	DESCRIPTION	DATE	APPROVED BY
	REVISIONS		

J.A. JONES ENVIRONMENTAL SERVICES JACKSONVILLE, FLORIDA

A/E CONTRACT NO: N62470-93-D-3033

ACTIVITY - SATISFACTORY TO: | DATE | PROJECT MANAGER | FIRE PROTECTION | QUALITY CONTROL | PROJECT MANAGER | CONTROL DIRECTOR

FOR EFD USE CONTROL OFFICE | DATE

DEPARTMENT OF THE NAVY — NAVAL FACILITIES ENGINEERING COMMAND
NAVAL STATION — ATLANTIC DIVISION — NORFOLK, VIRGINIA

RAC ACTION FOR STATEMENT OF WORK DESIGN
TANK FARM C
MARINE CORPS AIR STATION
CHERRY POINT, NORTH CAROLINA

AIR SPARGE/BIOSPARGE SYSTEM LAYOUT

CODE ID. NO. 80091	SIZE D
SCALE:	1"=25'
EFD NO.	
STA. PROJ. NO.	
SPEC. NO.	
CONSTR. CONTR. NO.	N62470-93-D-3033
NAVFAC DRAWING NO.	
SHEET 8 OF 18	

C-8

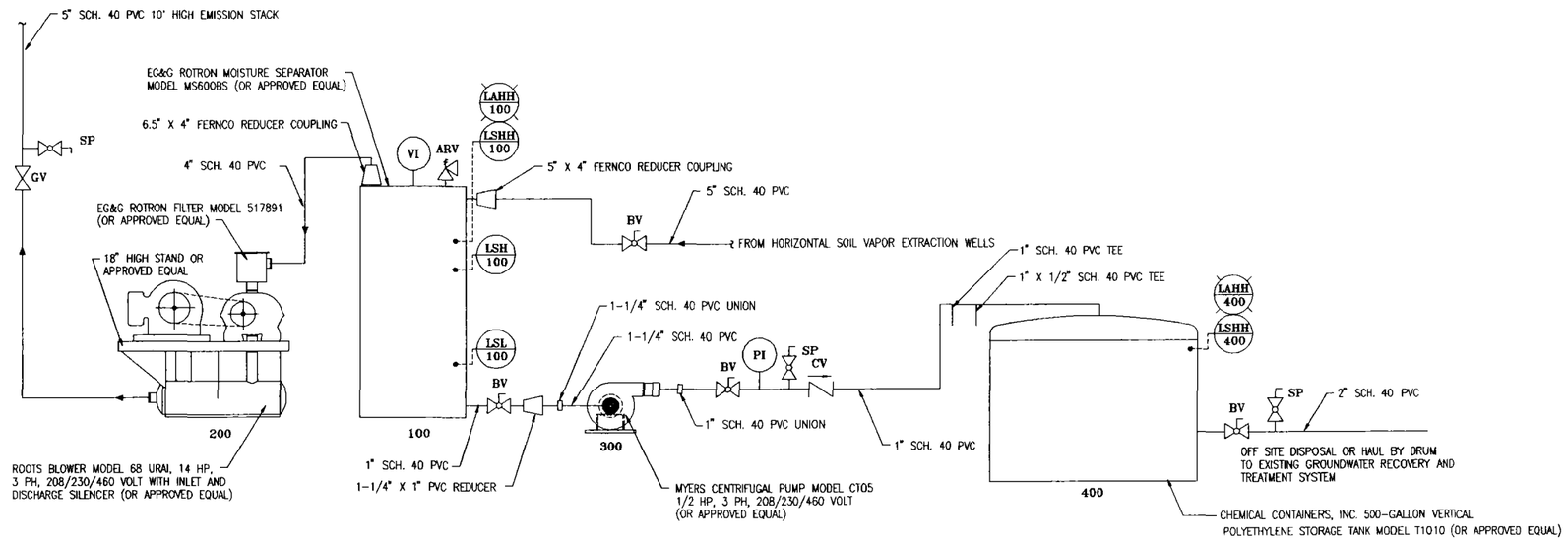

SOIL VAPOR EXTRACTION PIPING AND INSTRUMENTATION DIAGRAM

NOT TO SCALE

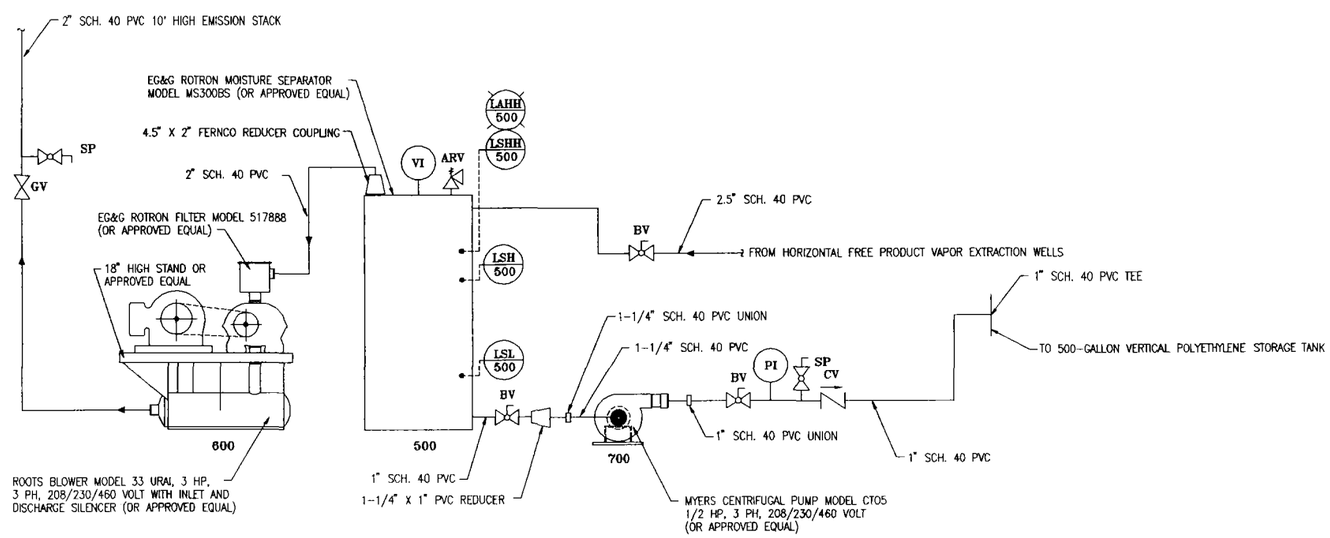

FREE PRODUCT VAPOR EXTRACTION PIPING AND INSTRUMENTATION DIAGRAM

NOT TO SCALE

SYMBOL	DESCRIPTION	DATE	APPROVED BY

REVISIONS

J.A. JONES ENVIRONMENTAL SERVICES JACKSONVILLE, FLORIDA

J.A. CONTRACT NO. N62470-93-D-3033

ACTIVITY - SATISFACTORY TO: DATE

DEPARTMENT OF THE NAVY — NAVAL FACILITIES ENGINEERING COMMAND
NAVAL STATION — ATLANTIC DIVISION — NORFOLK, VIRGINIA

RAC ACTION FOR STATEMENT OF WORK DESIGN
TANK FARM C
MARINE CORPS AIR STATION
CHERRY POINT, NORTH CAROLINA

FREE PRODUCT VAPOR EXTRACTION AND SOIL VAPOR EXTRACTION PIPING AND INSTRUMENTATION DIAGRAMS

CODE ID. NO. 80091	SIZE D
SCALE:	N.T.S.
EFD NO.	
STA. PROJ. NO.	
SPEC. NO.	
CONSTR. CONTR. NO.	N62470-93-D-3033
NAVFAC DRAWING NO.	
SHEET	9 OF 18

C-9

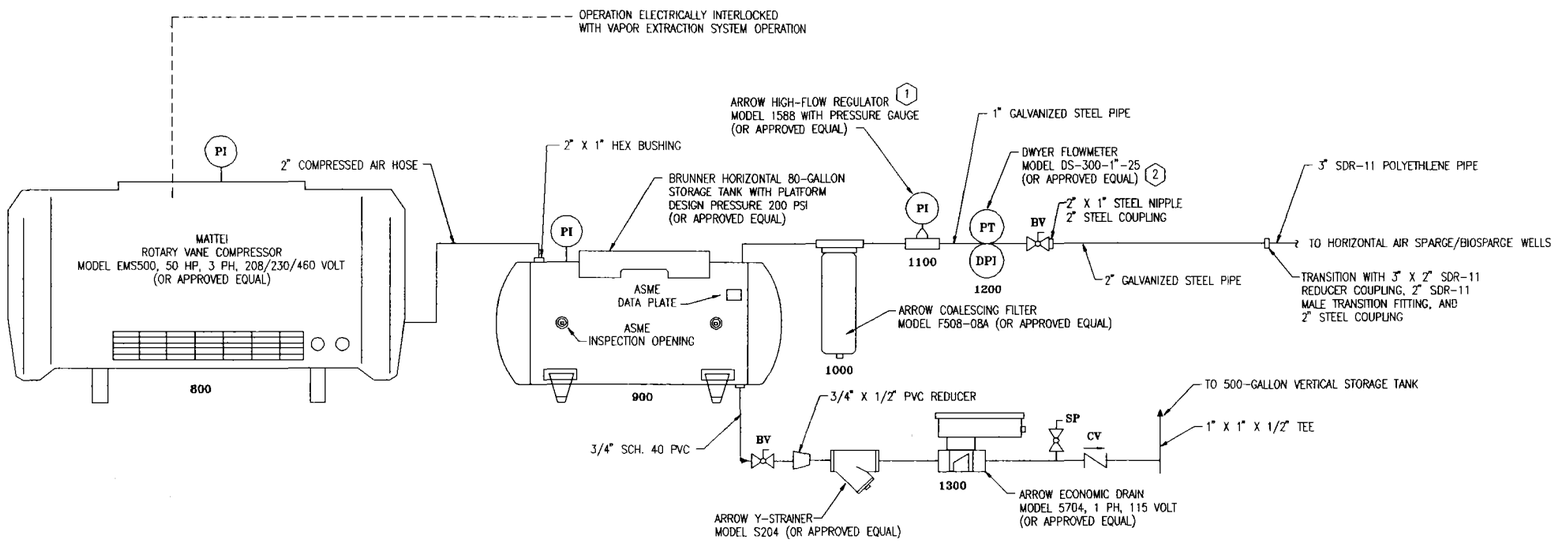

AIR SPARGE/BIOSPARGE PIPING AND INSTRUMENTATION DIAGRAM

NOT TO SCALE

NOTES:

1. PRESSURE TO BE REDUCED TO 50 PSI IN THE TREATMENT BUILDING.
2. AN ALLOWANCE OF 10 PIPE DIAMETERS UPSTREAM AND 5 PIPE DIAMETERS DOWNSTREAM OF STRAIGHT PIPE RUN IS REQUIRED.

SYMBOL	DESCRIPTION	DATE	APPROVED BY
	REVISIONS		

J.A. JONES ENVIRONMENTAL SERVICES JACKSONVILLE FLORIDA

A/E CONTRACT NO. N62470-93-D-3033

ACTIVITY - SATISFACTORY TO: DATE

FOR USE ON SUBMITTAL INFO ONLY

A/E DESIGNER: DRAWN: REVIEW: PROJECT MANAGER: FIRE PROTECTION: QUALITY CONTROL: BRANCH MANAGER: DISCIPLINE DIRECTOR:

DEPARTMENT OF THE NAVY NAVAL FACILITIES ENGINEERING COMMAND
NAVAL STATION ATLANTIC DIVISION NORFOLK, VIRGINIA

RAC ACTION FOR STATEMENT OF WORK DESIGN
TANK FARM C
MARINE CORPS AIR STATION
CHERRY POINT, NORTH CAROLINA

AIR SPARGE/BIOSPARGE PIPING AND INSTRUMENTATION DIAGRAM

CODE ID. NO. 80091	SIZE D
SCALE: N.T.S.	
EFD NO.	
STA. PROJ. NO.	
SPEC. NO.	
CONSTR. CONTR. NO. N62470-93-D-3033	
NAVFAC DRAWING NO.	
SHEET 10 OF 18	

C-10

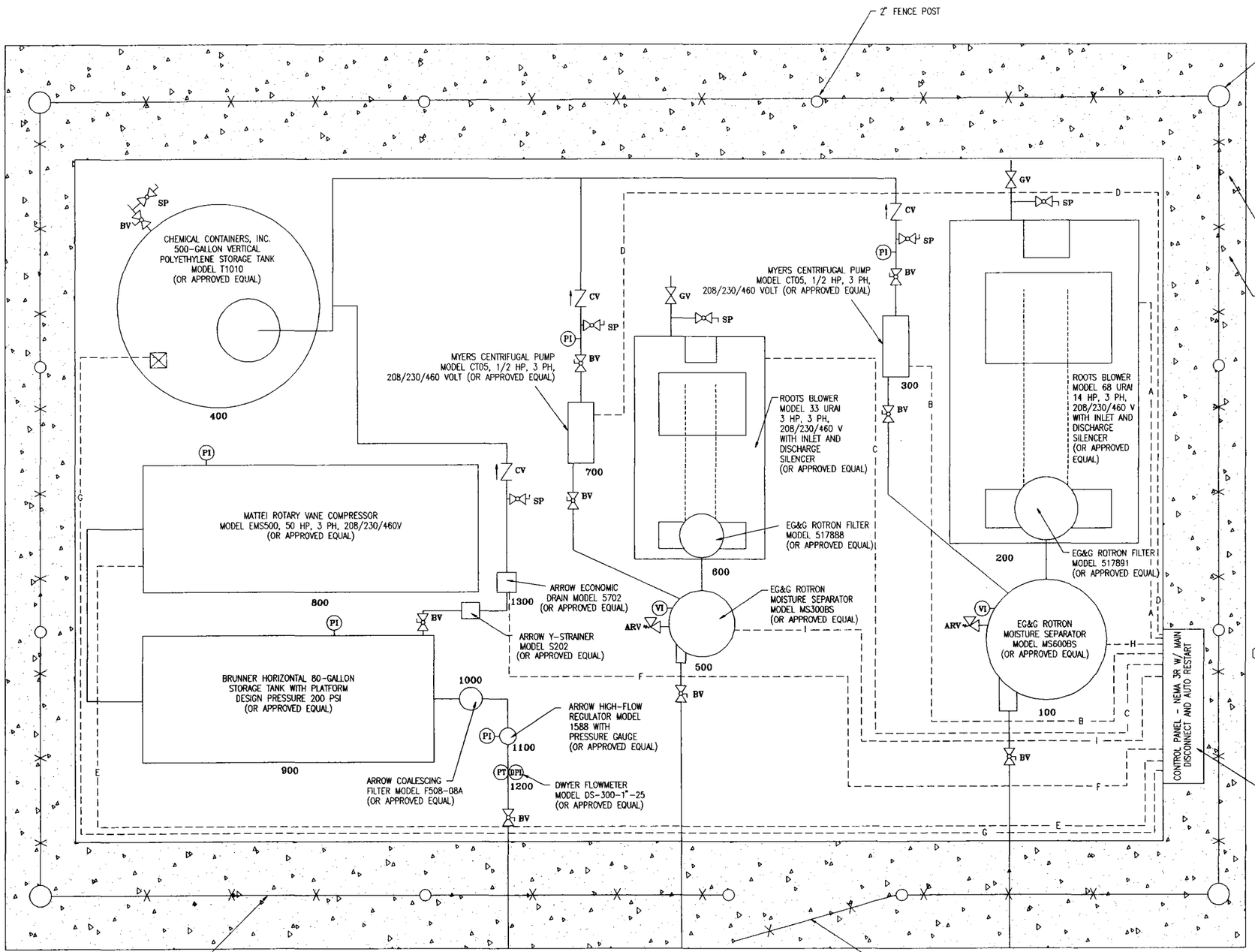

ELECTRICAL NOTES:

1. CONTROL PANEL WILL BE NEMA 3R.
2. ALL WIRING, CONDUIT, SEAL-OFFS, SWITCHES, ETC. WILL BE INSTALLED IN ACCORDANCE WITH A CLASS 1, DIVISION 2, GROUP D HAZARDOUS LOCATION.
3. CONDUIT SIZE AND WIRE GAUGE ARE MINIMUM REQUIREMENTS. SUBSTITUTIONS REQUIRE CONTRACTOR APPROVAL.
4. ALTERNATE CONDUIT MATERIAL MUST MEET CLASS 1, DIVISION 2, GROUP D SPECIFICATIONS AND BE PRE-APPROVED BY CONTRACTOR.
5. PROVIDE GFCI OUTLET INSIDE CONTROL PANEL.

ELECTRICAL KEY

A 1" RIGID METAL CONDUIT W/4 #6 THHN COPPER FOR SVE BLOWER 200

B 1/2" RIGID METAL CONDUIT W/4 #14 THHN COPPER FOR SVE PUMP 300

C 1/2" RIGID METAL CONDUIT W/4 #12 THHN COPPER FOR FPVE BLOWER 600

D 1/2" RIGID METAL CONDUIT W/4 #14 THHN COPPER FOR FPVE PUMP 700

E 1-1/2" RIGID METAL CONDUIT W/4 #3/0 THHN COPPER FOR AIR COMPRESSOR 800

F 1/2" RIGID METAL CONDUIT W/3 #14 THHN COPPER FOR AUTO-DRAIN 1300

G 1/2" RIGID METAL CONDUIT W/2 #14 THHN COPPER FOR STORAGE TANK 400 HIGH LEVEL FLOAT SWITCH

H 1" RIGID METAL CONDUIT W/3 #14 THHN COPPER FOR MOISTURE SEPARATOR 100 LEVEL SENSORS, AND W/2 #14 THHN COPPER FOR MOISTURE SEPARATOR HIGH WATER SENSOR

I 1" RIGID METAL CONDUIT W/3 #14 THHN COPPER FOR MOISTURE SEPARATOR 500 LEVEL SENSORS, AND W/2 #14 THHN COPPER FOR MOISTURE SEPARATOR HIGH WATER SENSOR

1 2 3 4 5

NOTES:

1. MINIMUM CONCRETE PAD SIZE IS 22' LONG, 16' WIDE AND 10" THICK WITH 2 LAYERS OF 6" X 6" - W4.0 X W4.0 WELDED WIRE FABRIC. CONCRETE SHALL HAVE A 28 DAY MINIMUM COMPRESSIVE STRENGTH OF 4,000 PSI.
2. SOIL AND GROUNDWATER TREATMENT EQUIPMENT WILL BE SKID MOUNTED AND PLACED ON THE CONCRETE PAD. TREATMENT EQUIPMENT WILL BE SURROUNDED BY A CHAIN LINK FENCE.

PLAN
SCALE 1" = 2'

A C-5 C-11 TREATMENT SYSTEM PIPING AND ELECTRICAL PLAN

NOT TO SCALE

SYMBOL	DESCRIPTION	DATE	APPROVED BY
	REVISIONS		

J.A. JONES ENVIRONMENTAL SERVICES JACKSONVILLE FLORIDA
J.A.E. CONTRACT NO. N62470-93-D-3033
ACTIVITY - SATISFACTORY TO: DATE
FOR J.A.E. COORDINATOR APPROVAL DATE

DEPARTMENT OF THE NAVY NAVAL FACILITIES ENGINEERING COMMAND
NAVAL STATION ATLANTIC DIVISION NORFOLK, VIRGINIA
RAC ACTION FOR STATEMENT OF WORK DESIGN
TANK FARM C
MARINE CORPS AIR STATION
CHERRY POINT, NORTH CAROLINA
TREATMENT SYSTEM PIPING AND ELECTRICAL PLAN

CODE ID. NO. 80091	SIZE D
SCALE:	N.T.S.
EFD NO.	
STA. PROJ. NO.	
SPEC. NO.	
CONSTR. CONTR. NO.	N62470-93-D-3033
NAVFAC DRAWING NO.	
SHEET 11 OF 18	
C-11	

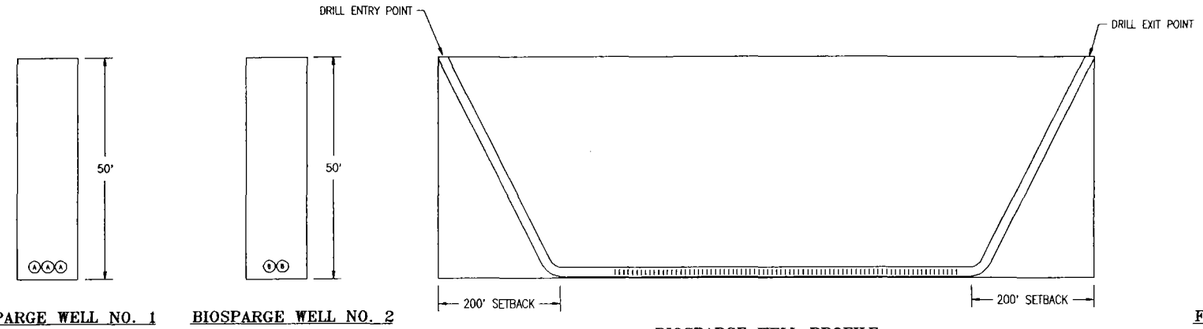

BIOSPARGE WELL NO. 1 WELL SCREEN

BIOSPARGE WELL NO. 2 WELL SCREEN

BIOSPARGE WELL PROFILE

BIOSPARGE PIPE LEGEND

WELL CASING	WELL SCREEN
A. 1" SDR-11 PE PIPE	1" SLOTTED SDR-11 PE PIPE
B. 1" SDR-11 PE PIPE	1" SLOTTED SDR-11 PE PIPE

D C-7 C-12 BIOSPARGE WELL DETAIL
NOT TO SCALE

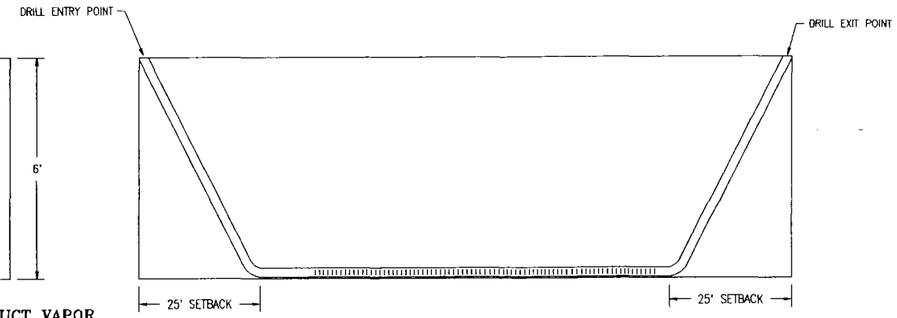

FREE PRODUCT VAPOR EXTRACTION WELL SCREEN

FREE PRODUCT VAPOR EXTRACTION WELL PROFILE

FREE PRODUCT VAPOR EXTRACTION PIPE LEGEND

WELL	WELL CASING	WELL SCREEN
E. FPVE1	1.5" SDR-11 PE PIPE	1.5" SLOTTED SDR-11 PE PIPE
FPVE3	1.5" SDR-11 PE PIPE	1.5" SLOTTED SDR-11 PE PIPE
FPVE4	1.5" SDR-11 PE PIPE	1.5" SLOTTED SDR-11 PE PIPE
FPVE5	1.5" SDR-11 PE PIPE	1.5" SLOTTED SDR-11 PE PIPE

B C-5 C-12 FREE PRODUCT VAPOR EXTRACTION WELL DETAIL
NOT TO SCALE

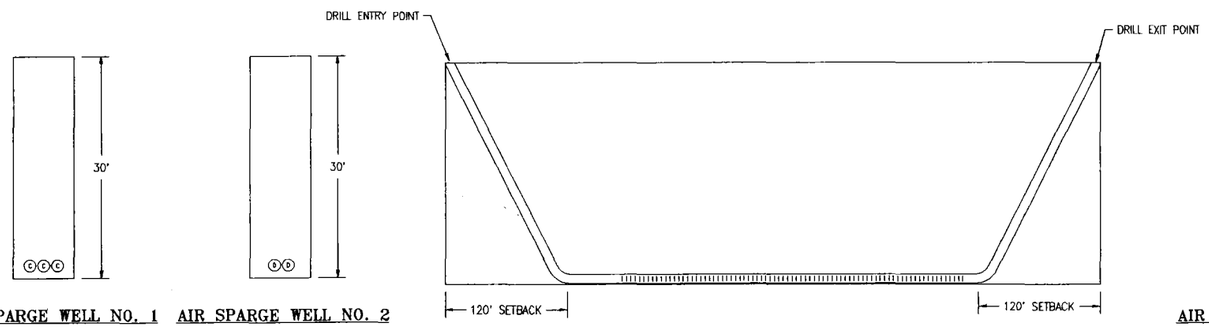

AIR SPARGE WELL NO. 1 WELL SCREEN

AIR SPARGE WELL NO. 2 WELL SCREEN

AIR SPARGE WELL PROFILE

AIR SPARGE PIPE LEGEND

WELL CASING	WELL SCREEN
C. 1.5" SDR-11 PE PIPE	1.5" SLOTTED SDR-11 PE PIPE
D. 1.5" SDR-11 PE PIPE	1.5" SLOTTED SDR-11 PE PIPE

E C-7 C-12 AIR SPARGE WELL DETAIL
NOT TO SCALE

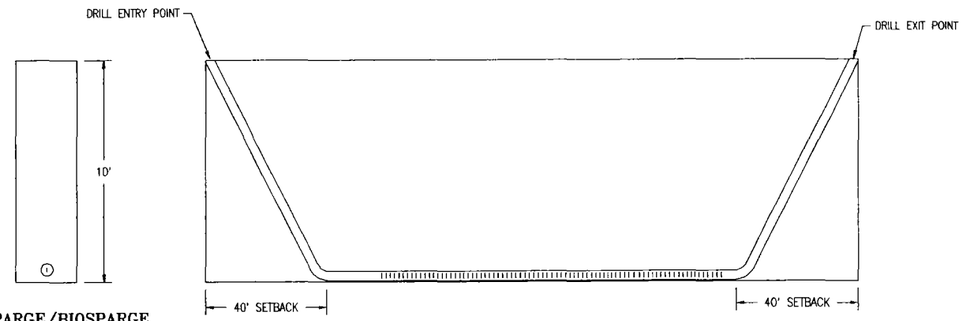

AIR SPARGE/BIOSPARGE HEADER NO. 2

AIR SPARGE/BIOSPARGE HEADER NO. 2 PROFILE

AIR SPARGE/BIOSPARGE HEADER NO. 2 PIPE LEGEND

I. 2" SDR-11 PE PIPE

Y C-8 C-12 AIR SPARGE/BIOSPARGE HEADER NO. 2 DETAIL
NOT TO SCALE

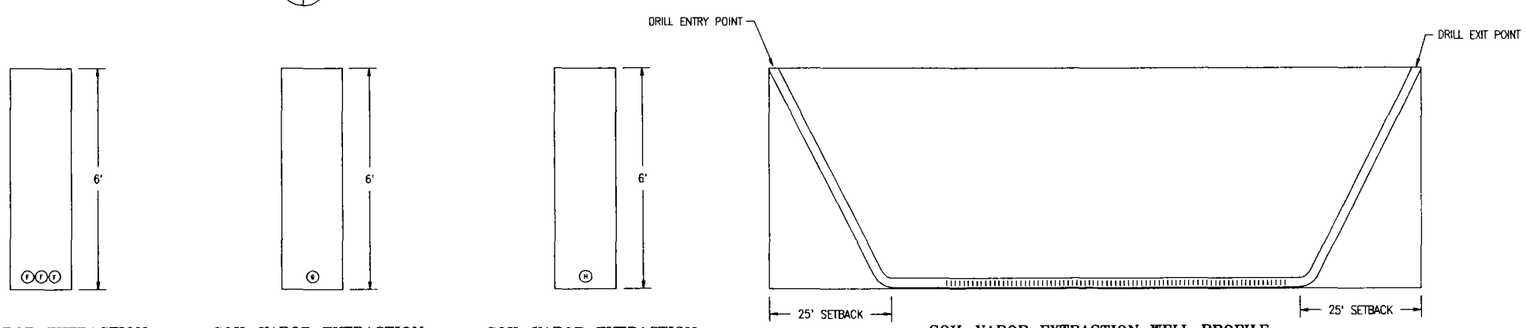

SOIL VAPOR EXTRACTION WELL NO. 1 WELL SCREEN

SOIL VAPOR EXTRACTION WELL NO. 2 WELL SCREEN

SOIL VAPOR EXTRACTION WELL NO. 3 WELL SCREEN

SOIL VAPOR EXTRACTION WELL PROFILE

C C-5 C-12 SOIL VAPOR EXTRACTION WELL DETAIL
NOT TO SCALE

SOIL VAPOR EXTRACTION PIPE LEGEND

WELL CASING	WELL SCREEN
F. 3" SDR-11 PE PIPE	3" SLOTTED SDR-11 PE PIPE
G. 3" SDR-11 PE PIPE	3" SLOTTED SDR-11 PE PIPE
H. 2" SDR-11 PE PIPE	2" SLOTTED SDR-11 PE PIPE

SYMBOL	DESCRIPTION	DATE	APPROVED BY
	REVISIONS		

DESIGNED
DRAWN
REVIEWED
PROJECT MANAGER
APPV'D/DCM
FIRE PROTECTION
QUALITY CONTROL
BRANCH MANAGER
DIVISION DIRECTOR

J.A. JONES
ENVIRONMENTAL SERVICES
JACKSONVILLE, FLORIDA

N.A.E. CONTRACT NO. N62470-93-D-3033
ACTIVITY - SATISFACTORY TO: DATE
FOR USE FOR CONSTRUCTION - NAVFAC DIVISION DIRECTOR DATE

DEPARTMENT OF THE NAVY NAVAL FACILITIES ENGINEERING COMMAND
NAVAL STATION ATLANTIC DIVISION NORFOLK, VIRGINIA

RAC ACTION FOR STATEMENT OF WORK DESIGN
TANK FARM C
MARINE CORPS AIR STATION
CHERRY POINT, NORTH CAROLINA

HORIZONTAL WELL AND BORING DETAILS

CODE ID. NO. 80091 SIZE D
SCALE: N.T.S.
EFD NO.
STA. PROJ. NO.
SPEC. NO.
CONSTR. CONTR. NO. N62470-93-D-3033
NAVFAC DRAWING NO.
SHEET 12 OF 18
C-12

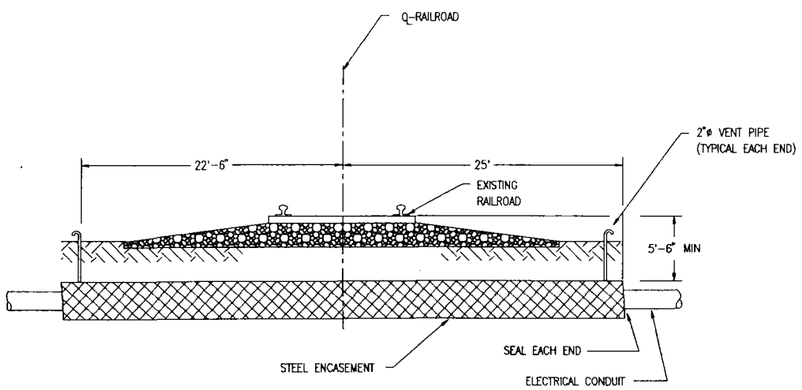

JACK AND BORE UNDER RAILROAD DETAILS

H | C-5 | C-13

NOT TO SCALE

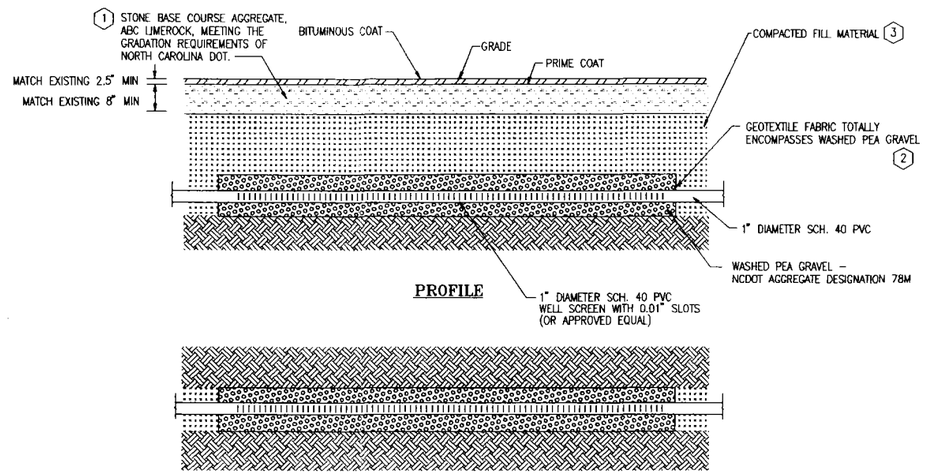

PROFILE

PLAN

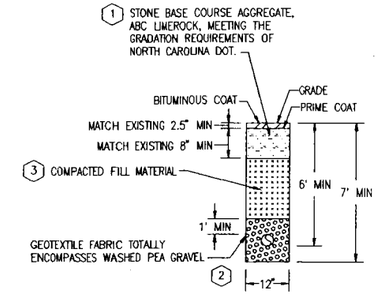

SIDE

NOTES:

1. LIMEROCK WILL BE COMPACTED TO 95% OF ASTM D 698.
2. GEOTEXTILE FABRIC WILL ENCOMPASS WASHED PEA GRAVEL AND HAVE A 12 INCH MINIMUM OVERLAP ON ALL SEAMS.
3. SOIL FILL MATERIAL WILL BE COMPACTED TO 95% OF ASTM D 698.

HORIZONTAL FREE PRODUCT VAPOR EXTRACTION WELL NO. 2

F | C-5 | C-13

NOT TO SCALE

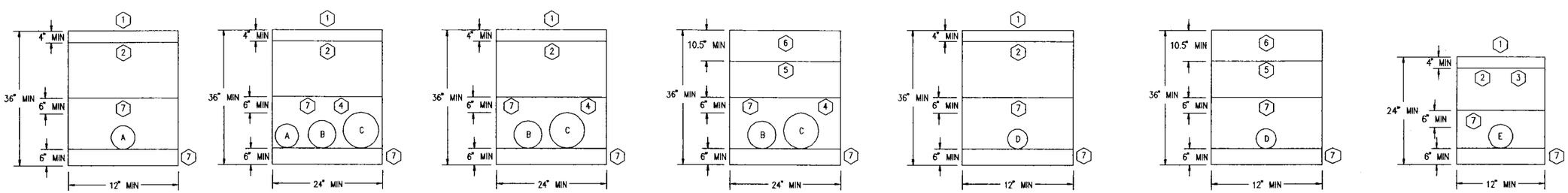

NOTES:

1. MINIMUM 4" OF TOPSOIL. SEED WILL MATCH EXISTING VEGETATION.
2. SOIL FILL MATERIAL WILL BE COMPACTED TO 85% OF ASTM D 698.
3. ELECTRICAL MARKER TAPE WILL BE PLACED 12 INCHES BELOW LAND SURFACE.
4. PIPES WILL BE SEPARATED BY A MINIMUM OF 1-1/2 TIMES PIPE DIAMETER.
5. SOIL FILL MATERIAL WILL BE COMPACTED TO 95% OF ASTM D 698.
6. MINIMUM 2.5" OF PRIME COAT AND BITUMINOUS COAT, FOLLOWED BY A MINIMUM 8" STONE BASE COURSE AGGREGATE, ABC LIMEROCK, MEETING THE GRADATION REQUIREMENTS OF NORTH CAROLINA DOT. THE LIMEROCK WILL BE COMPACTED TO 95% OF ASTM D 698.
7. COARSE SANDS AND GRAVELS WITH MAXIMUM PARTICLE SIZE OF 40mm (1.5 INCHES) INCLUDING VAROIUS GRADED SANDS AND GRAVELS CONTAINING SMALL PERCENTAGES OF FINES, GENERALLY GRANULAR AND NON-COHESIVE. SOIL TYPES GW, GP, SW AND SP ARE INCLUDED IN THIS CLASS AS SPECIFIED IN ASTM D2487. COMPACT TO 95% OF ASTM D 698 MAXIMUM DENSITY.

PIPE LEGEND

A. 2.5" SCH. 40 PVC FPVE HEADER
B. 3" SDR-11 PE AIR SPARGE/BIOSPARGE HEADER
C. 5" SCH. 40 PVC SVE HEADER
D. 2" SDR-11 PE AIR SPARGE/BIOSPARGE HEADER
E. 2.5" SCH. 80 PVC ELECTRICAL CONDUIT

PIPE TRENCH DETAILS

G | C-6 | C-13

NOT TO SCALE

SYMBOL	DESCRIPTION	DATE	APPROVED BY

REVISIONS

J.A. JONES ENVIRONMENTAL SERVICES JACKSONVILLE, FLORIDA

A/E CONTRACT NO. N62470-93-D-3033

DEPARTMENT OF THE NAVY — NAVAL FACILITIES ENGINEERING COMMAND
NAVAL STATION — ATLANTIC DIVISION NORFOLK, VIRGINIA

RAC ACTION FOR STATEMENT OF WORK DESIGN
TANK FARM C
MARINE CORPS AIR STATION
CHERRY POINT, NORTH CAROLINA

FREE PRODUCT VAPOR EXTRACTION WELL DETAILS, PIPE TRENCH DETAILS, AND JACK AND BORE DETAILS

CODE ID. NO. 80091 | SIZE D
SCALE: N.T.S.
EFD NO.
STA. PROJ. NO.
SPEC. NO.
CONSTR. CONTR. NO. N62470-93-D-3033
NAVFAC DRAWING NO.
SHEET 13 OF 18
C-13

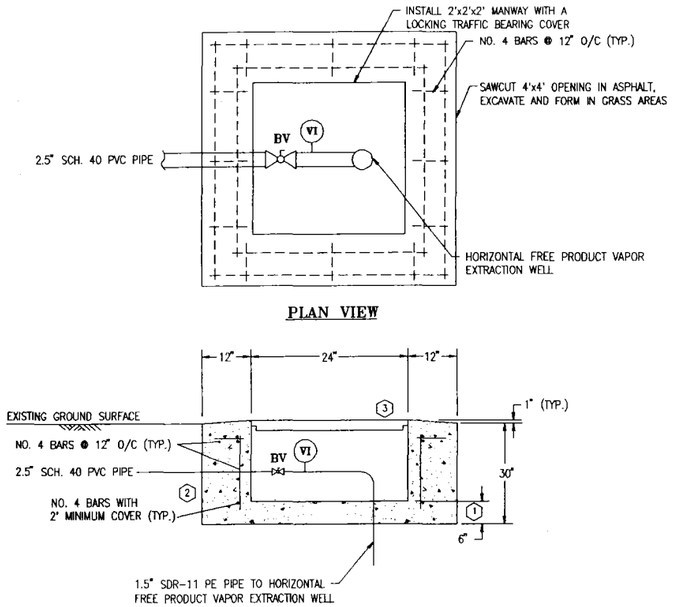

MANWAY DETAIL

FPVE1 AND FPVE3 THROUGH 5

I C-5 C-14 FPVE WELL VALVE BOX

NOT TO SCALE

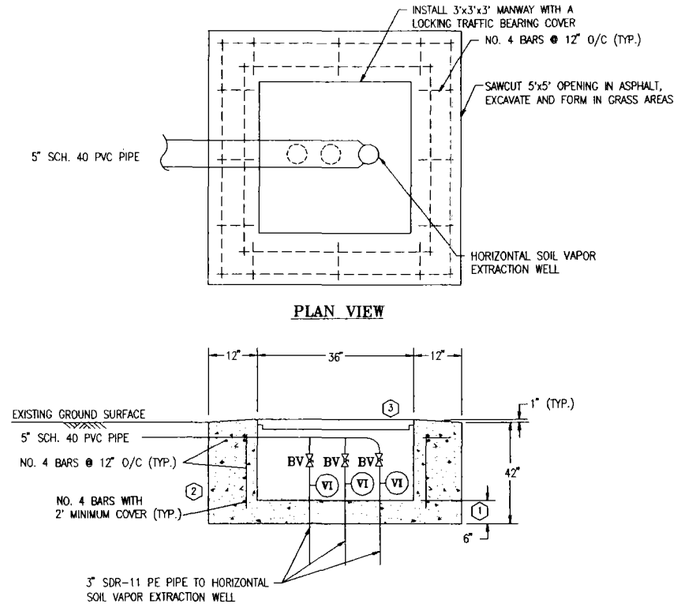

MANWAY DETAIL

SVE1

K C-6 C-14 SVE WELL VALVE BOX

NOT TO SCALE

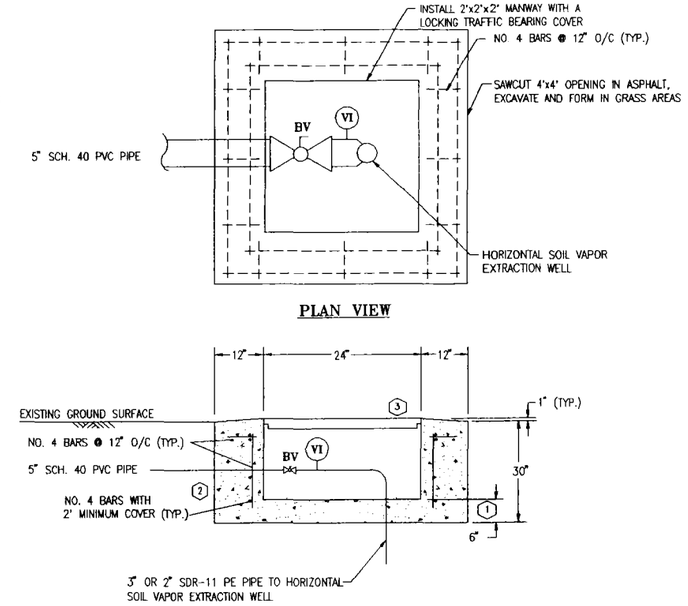

MANWAY DETAIL

SVE2 AND SVE3

L C-6 C-14 SVE WELL VALVE BOX

NOT TO SCALE

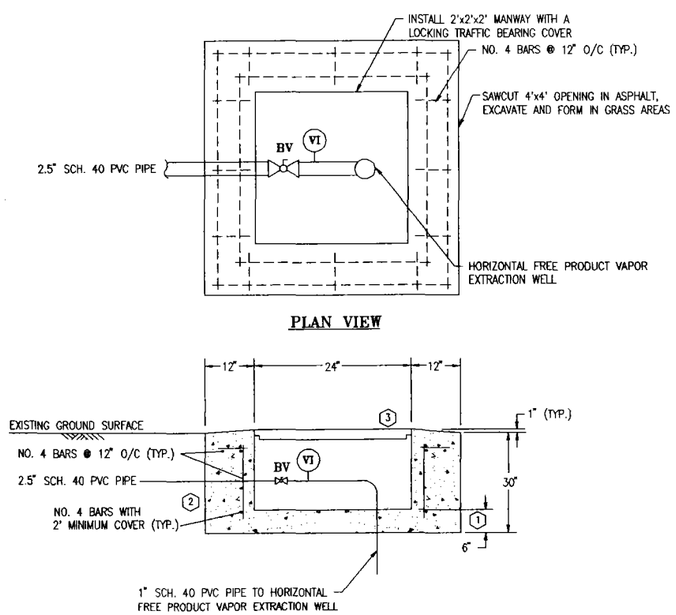

MANWAY DETAIL

FPVE2

J C-5 C-14 FPVE WELL VALVE BOX

NOT TO SCALE

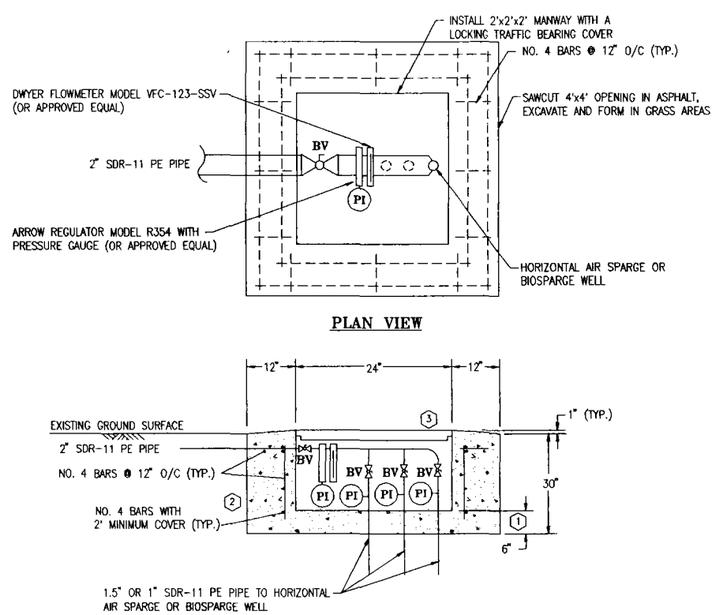

MANWAY DETAIL

AS1 AND BS1

M C-8 C-14 AIR SPARGE/BIOSPARGE WELL VALVE BOX

NOT TO SCALE

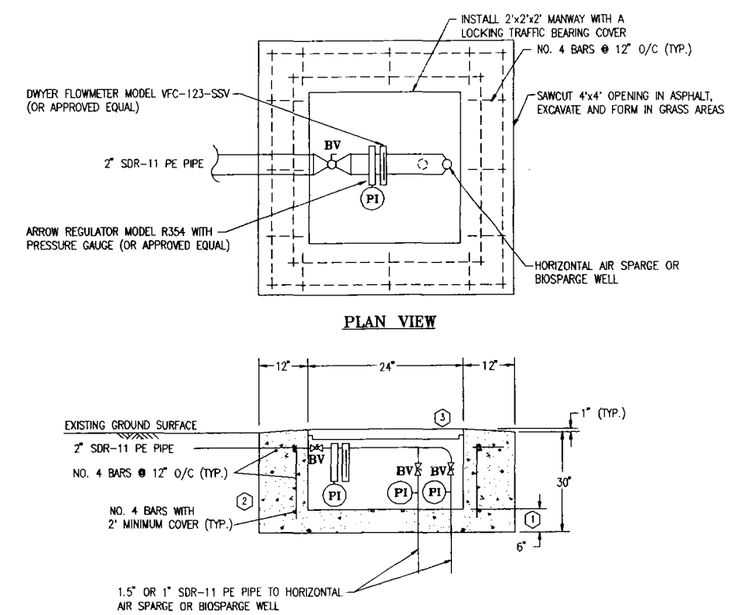

MANWAY DETAIL

AS2 AND BS2

N C-8 C-14 AIR SPARGE/BIOSPARGE WELL VALVE BOX

NOT TO SCALE

SYMBOL	DESCRIPTION	DATE	APPROVED BY
	REVISIONS		

J.A. JONES ENVIRONMENTAL SERVICES JACKSONVILLE, FLORIDA

N.A.F. CONTRACT NO. N62470-93-D-3033

CONTRACT - SATISFACTORY TO: DATE:

DIV. DIR. FOR SUBMITTER INITIALS: DATE:

ALL DESIGNED / DRAWN / REVIEW / CHKD / PROJECT MANAGER / FIRE PROTECTION / QUALITY CONTROL / PROJECT MANAGER / DESIGN DIRECTOR

DEPARTMENT OF THE NAVY NAVAL FACILITIES ENGINEERING COMMAND

NAVAL STATION ATLANTIC DIVISION NORFOLK, VIRGINIA

RAC ACTION FOR STATEMENT OF WORK DESIGN

TANK FARM C

MARINE CORPS AIR STATION

CHERRY POINT, NORTH CAROLINA

SOIL VAPOR EXTRACTION, FREE PRODUCT VAPOR EXTRACTION, AIR SPARGE, AND BIOSPARGE WELL VALVE BOX DETAILS

CODE ID. NO. 80091 SIZE D

SCALE: N.T.S.

EFD NO.

STA. PROJ. NO.

SPEC. NO.

CONSTR. CONTR. NO. N62470-93-D-3033

NAVFAC DRAWING NO.

SHEET 14 OF 18

C-14

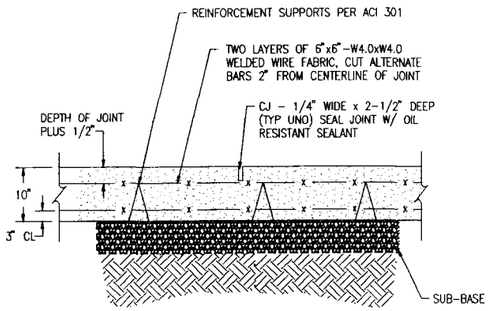

NOTE:
SUB-BASE SHALL CONFORM TO ASTM D1241-68 (1989), TYPE 1, GRADATION B AND SHALL BE COMPACTED TO 95% OF MODIFIED PROCTOR PER ASTM D1557-91. THICKNESS SHALL BE A MINIMUM OF 8".

O C-11 C-15 CONCRETE PLACEMENT DETAIL
NOT TO SCALE

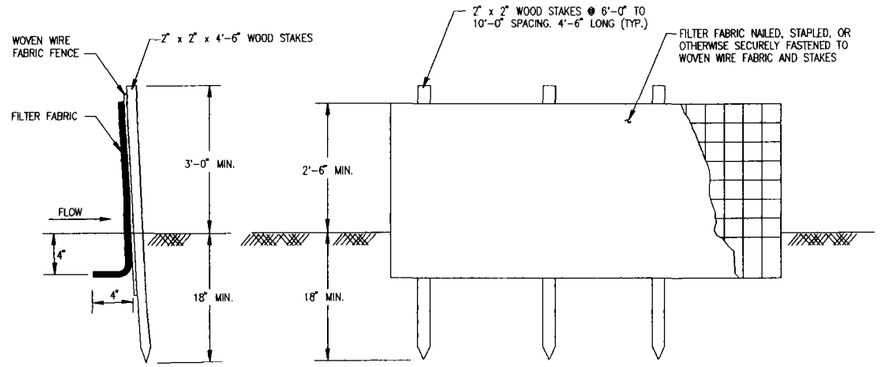

SECTION ELEVATION

P C-5 C-15 STAKED SILT FENCE DETAIL
NOT TO SCALE

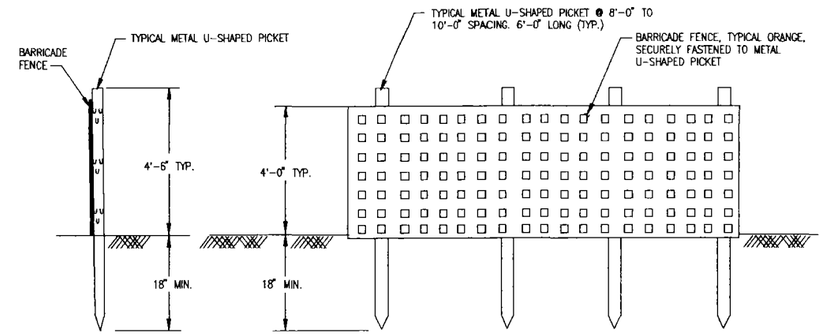

SECTION ELEVATION

Q C-8 C-15 BARRICADE FENCE DETAIL
NOT TO SCALE

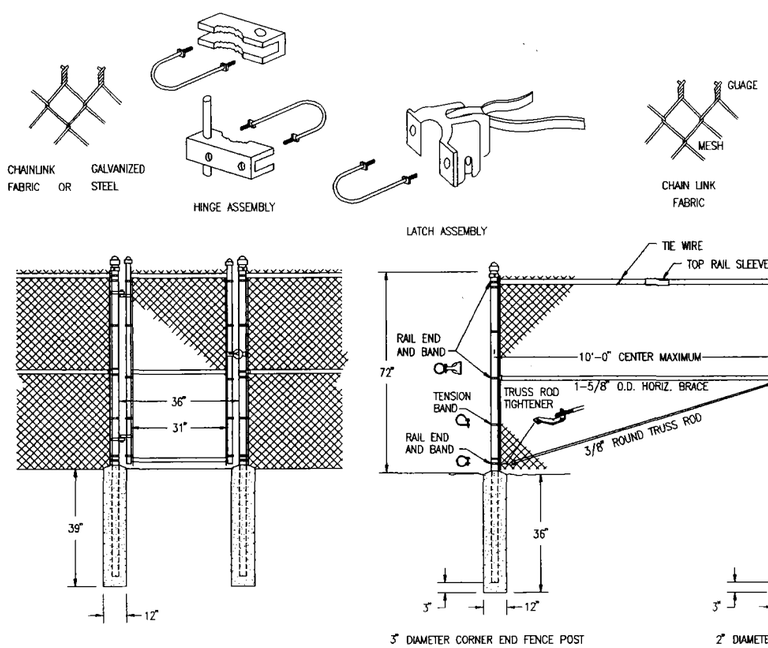

R C-11 C-15 SINGLE SWING GATE DETAIL
NOT TO SCALE

S C-11 C-15 CHAIN-LINK FENCE DETAIL
NOT TO SCALE

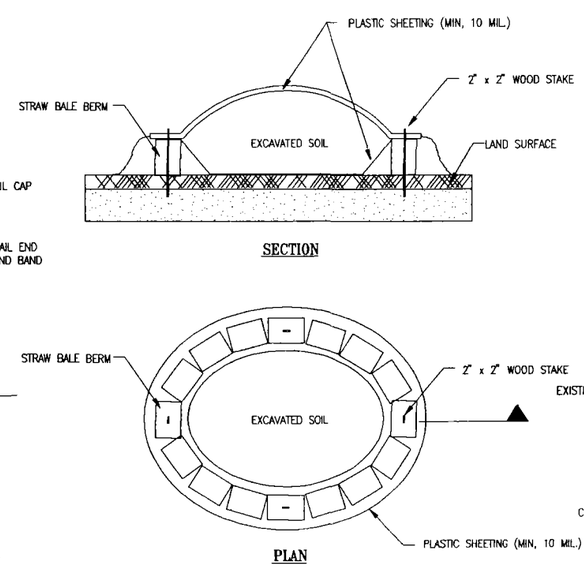

SECTION

PLAN

T C-5 C-15 TEMPORARY CONTAINMENT OF EXCAVATED SOIL DETAIL
NOT TO SCALE

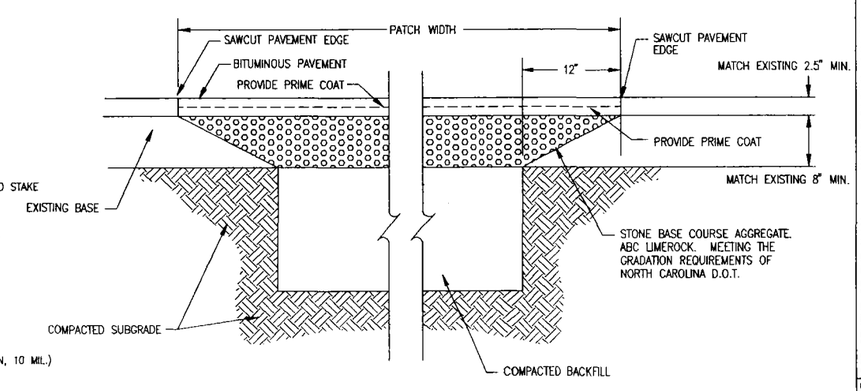

U C-8 C-15 PAVEMENT REPAIR DETAIL
NOT TO SCALE

SYMBOL	DESCRIPTION	DATE	APPROVED BY

REVISIONS

A.E. DESIGNED | DRAWN | REVIEW | CHIEF ARCH/ENGR | PROJECT MANAGER | FIRE PROTECTION | QUALITY CONTROL | BRANCH MANAGER | DIVISION DIRECTOR

J.A. JONES ENVIRONMENTAL SERVICES JACKSONVILLE, FLORIDA

A/E CONTRACT NO. N62470-93-D-3033 | DATE | ACTIVITY - SATISFACTORY NO. | DATE | FOR EFD SUBMISSION USE ONLY | DATE

DEPARTMENT OF THE NAVY NAVAL FACILITIES ENGINEERING COMMAND
ATLANTIC DIVISION NORFOLK, VIRGINIA
NAVAL STATION
RAC ACTION FOR STATEMENT OF WORK DESIGN
TANK FARM C
MARINE CORPS AIR STATION
CHERRY POINT, NORTH CAROLINA
MISCELLANEOUS DETAILS

CODE ID. NO. 80091 SIZE D
SCALE: N.T.S.
EFD NO.
STA. PROJ. NO.
SPEC. NO.
CONSTR. CONTR. NO. N62470-93-D-3033
NAVFAC DRAWING NO.
SHEET 15 OF 18
C-15

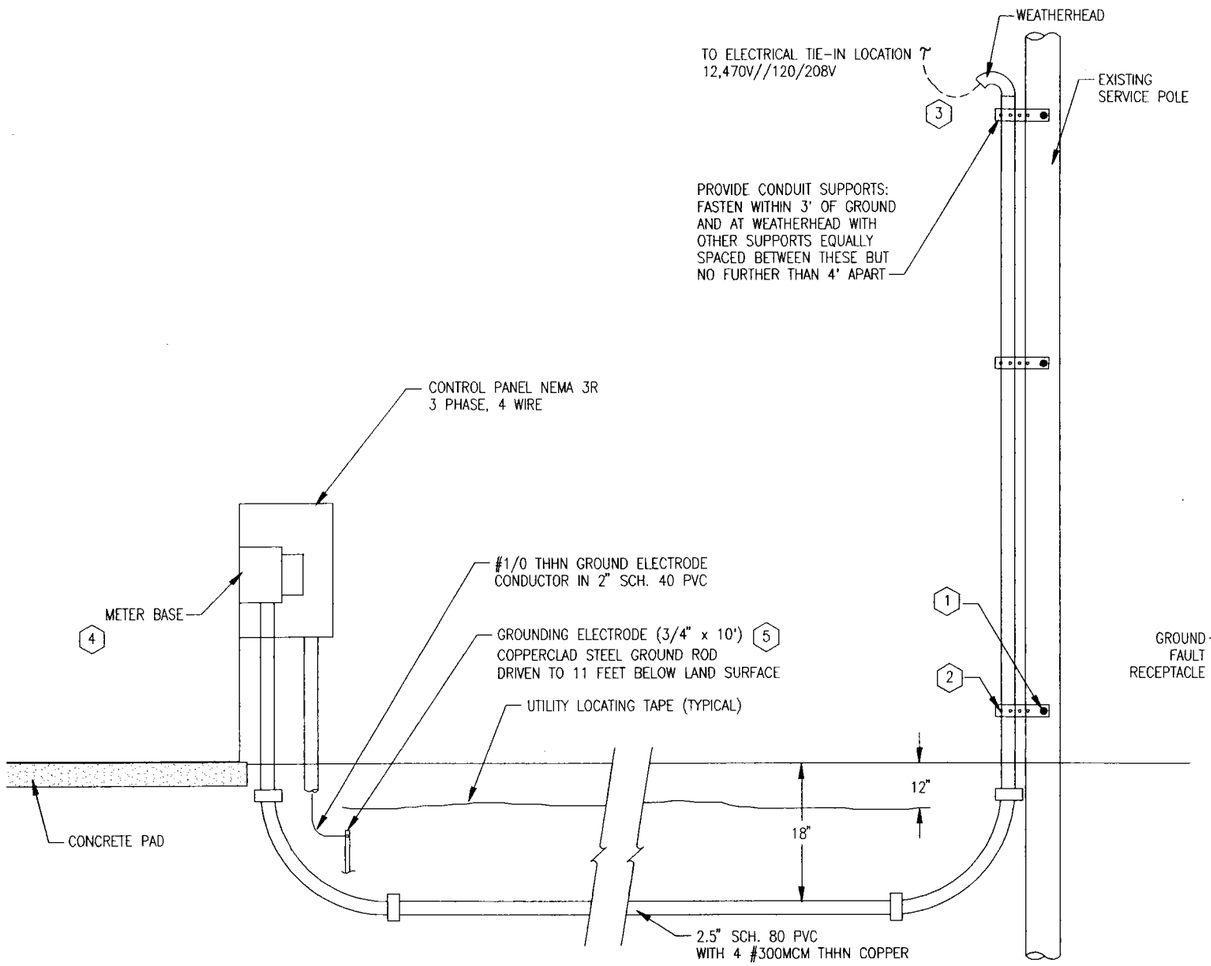

POWER SUPPLY CONNECTION DETAIL

V C-5 E-1

NOT TO SCALE

NOTES:

1. LAG SCREW, 1/2" x 4"
2. PERFORATED STRAPPING, 1-1/2" WIDE
3. TRENCH TO EXISTING SERVICE POLE AND PROVIDE CONDUIT AND SECONDARY CONDUCTORS. ELECTRICIANS WILL PLACE AND PROVIDE SERVICE CONNECTIONS TO SECONDARY TRANSFORMER. COORDINATE SERVICE CONNECTION WITH BASE UTILITIES.
4. ELECTRICIAN WILL PROVIDE SELF-CONTAINED METER FOR SKID-MOUNTED TREATMENT SYSTEM.
5. USE ADDITIONAL GROUND RODS, WHEN REQUIRED, TO OBTAIN RESISTANCE VALUE, AS SPECIFIED. GROUNDING REQUIREMENTS SHALL BE IN ACCORDANCE WITH NEC GUIDELINES.

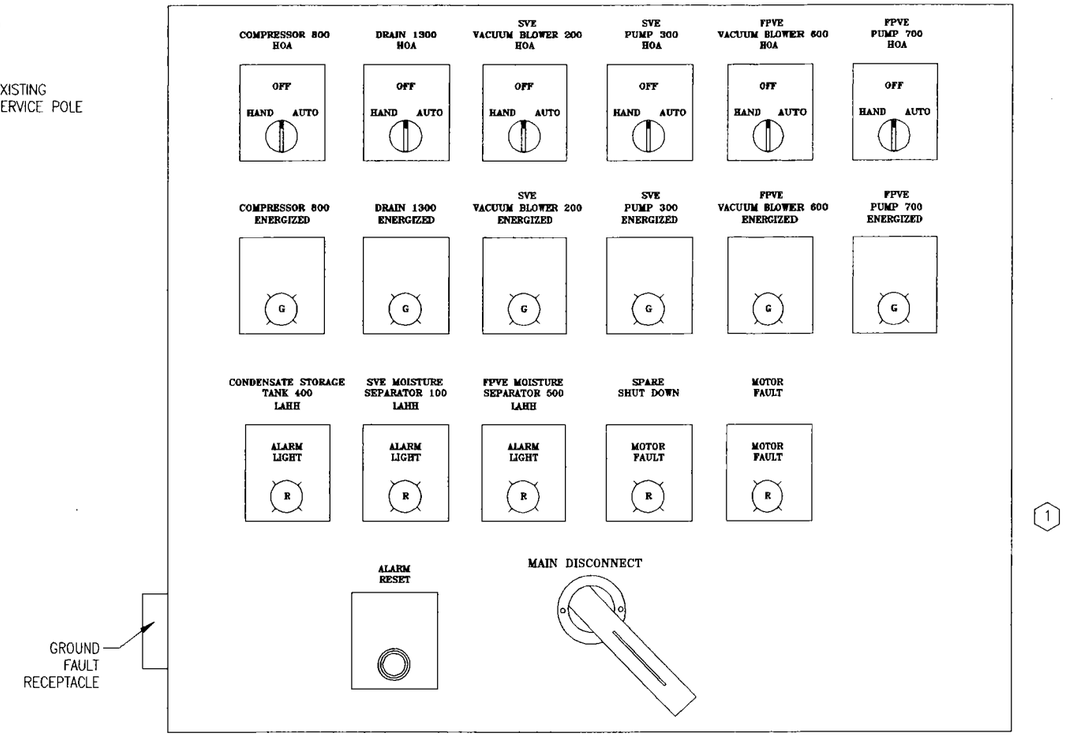

CONTROL PANEL DETAIL

X C-11 E-1

NOT TO SCALE

NOTES:

1. 250 AMP CONTROL PANEL WILL BE UL LISTED AND CERTIFIED FOR USE AS A SERVICE ENTRANCE.

SYMBOL	DESCRIPTION	DATE	APPROVED BY

REVISIONS

J.A. JONES ENVIRONMENTAL SERVICES JACKSONVILLE FLORIDA

A/E CONTRACT NO. N62470-93-D-3033

ACTIVITY - SATISFACTORY TO: DATE

FOR USE FOR SUBMITTAL PURPOSE DATE

A/E: INITIATED, DRAWN, REVIEW, CHIEF APED/CADD, PROJECT MANAGER, FIRE PROTECTION, QUALITY CONTROL, BRANCH MANAGER, DESIGN DIRECTOR

DEPARTMENT OF THE NAVY NAVAL FACILITIES ENGINEERING COMMAND
NAVAL STATION ATLANTIC DIVISION NORFOLK, VIRGINIA

RAC ACTION FOR STATEMENT OF WORK DESIGN
TANK FARM C
MARINE CORPS AIR STATION
CHERRY POINT, NORTH CAROLINA

POWER SUPPLY CONNECTION AND CONTROL PANEL DETAILS

CODE ID. NO. 80091	SIZE D
SCALE:	N.T.S.
EFD NO.	
STA. PROJ. NO.	
SPEC. NO.	
CONSTR. CONTR. NO.	N62470-93-D-3033
NAVFAC DRAWING NO.	
SHEET 16 OF 18	
E-1	

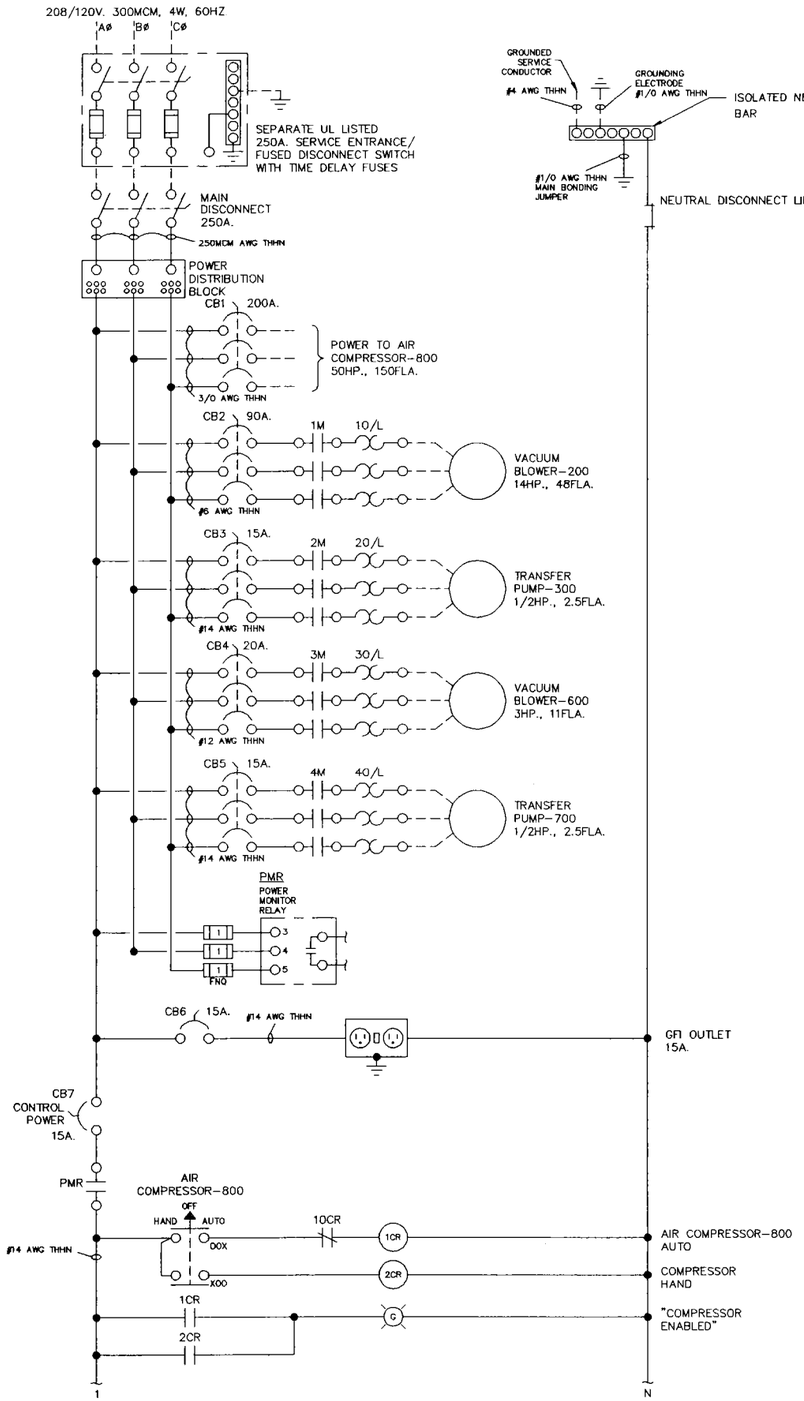

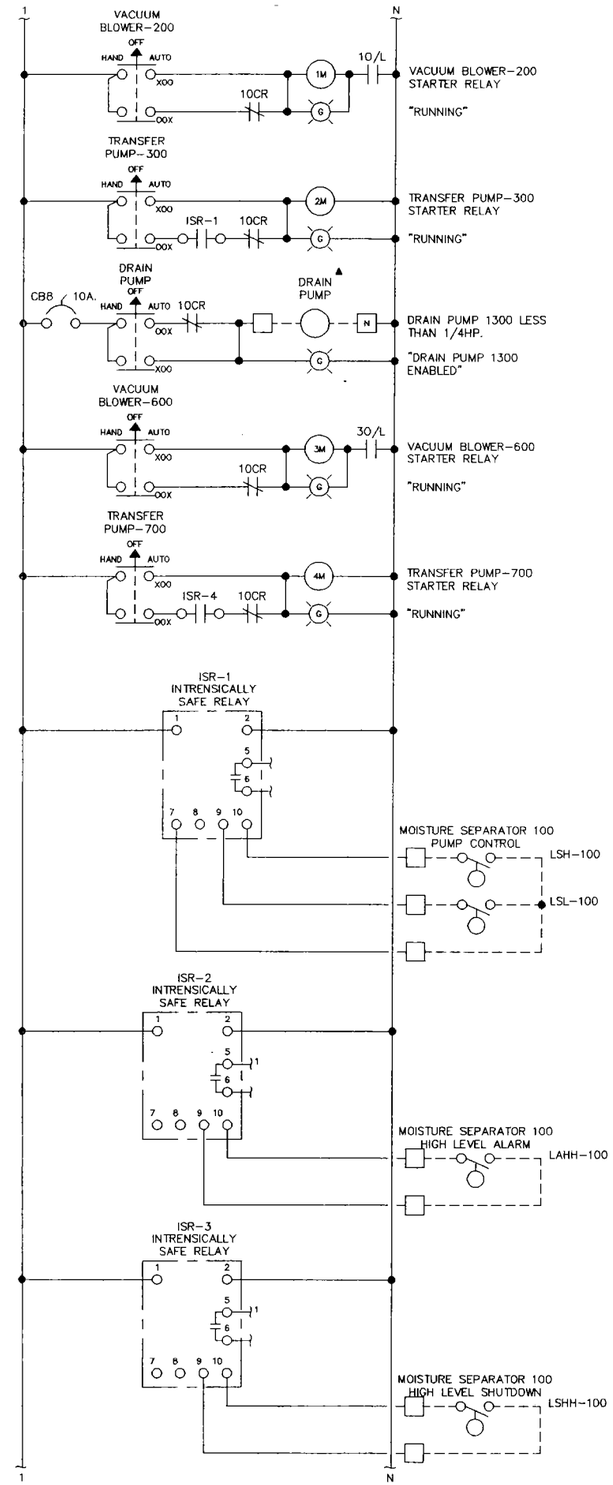

LSHH-400

REMOTE CONTACT

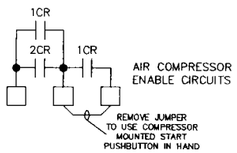

CONTROL LOGIC

1. LOW LEVEL IN MOISTURE SEPARATOR 100 STOP TRANSFER PUMP 300
2. HIGH LEVEL IN MOISTURE SEPARATOR 100 START TRANSFER PUMP 300
3. HIGH-HIGH LEVEL IN MOISTURE SEPARATOR 100 STOP VACUUM BLOWER 200, STOP VACUUM BLOWER 600, STOP COMPRESSOR 500. MANUAL RESTART
4. LOW LEVEL IN MOISTURE SEPARATOR 500 STOP TRANSFER PUMP 700
5. HIGH LEVEL IN MOISTURE SEPARATOR 500 START TRANSFER PUMP 700
6. HIGH-HIGH LEVEL IN MOISTURE SEPARATOR 500 STOP VACUUM BLOWER 200, STOP VACUUM BLOWER 600, STOP COMPRESSOR 500. MANUAL RESTART
7. HIGH-HIGH LEVEL IN STORAGE TANK 400 STOP VACUUM BLOWER 200, STOP VACUUM BLOWER 600, STOP COMPRESSOR 500. MANUAL RESTART

SYMBOL	DESCRIPTION	DATE	APPROVED BY

REVISIONS

J.A. JONES ENVIRONMENTAL SERVICES JACKSONVILLE, FLORIDA

A/E CONTRACT NO: N62470-93-D-3033

FACTORY - SATISFACTORY TO: DATE

FOR EFD COORDINATOR INITIAL DATE

DESIGNED DRAWN CHECKED PROJECT MANAGER FIRE PROTECTION QUALITY CONTROL BRANCH MANAGER DESIGN DIRECTOR

DEPARTMENT OF THE NAVY NAVAL FACILITIES ENGINEERING COMMAND
NAVAL STATION ATLANTIC DIVISION NORFOLK, VIRGINIA

RAC ACTION FOR STATEMENT OF WORK DESIGN
MARINE CORPS AIR STATION TANK FARM C
CHERRY POINT, NORTH CAROLINA

ELECTRICAL LINE DIAGRAM AND SYSTEM CONTROL LOGIC

CODE ID. NO. 80091 SIZE D
SCALE: N.T.S.
EFD NO.
STA. PROJ. NO.
SPEC. NO.
CONSTR. CONTR. NO. N62470-93-D-3033
NAVFAC DRAWING NO.
SHEET 17 OF 18
E-2

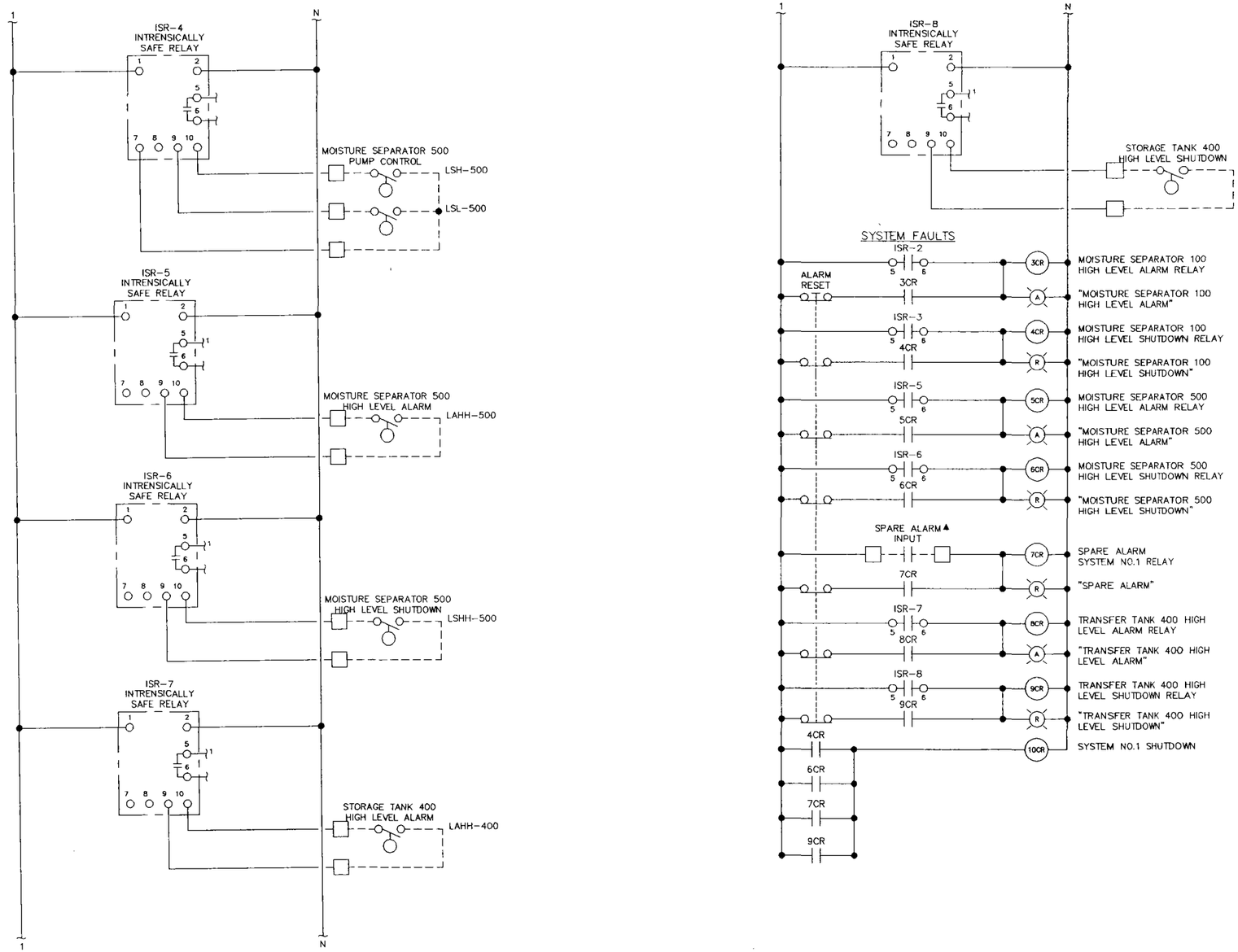

SYMBOL	DESCRIPTION	DATE	APPROVED BY
	REVISIONS		

J.A. JONES
ENVIRONMENTAL
SERVICES
JACKSONVILLE FLORIDA
A/E CONTRACT NO. N62470-93-D-3033

ACTIVITY - SATISFACTORY TO: DATE
FOR USE BY SIGNATURE INITIAL

ALE DESIGNED
DRAWN
REVIEW
CHIEF ARCH/ENGR
PROJECT MANAGER
FIRE PROTECTION
QUALITY CONTROL
BRANCH MANAGER
DESIGN DIRECTOR
DESIGN

DEPARTMENT OF THE NAVY NAVAL FACILITIES ENGINEERING COMMAND
NAVAL STATION ATLANTIC DIVISION NORFOLK, VIRGINIA

RAC ACTION FOR STATEMENT OF WORK DESIGN
TANK FARM C
MARINE CORPS AIR STATION
CHERRY POINT, NORTH CAROLINA

ELECTRICAL LINE DIAGRAM AND SYSTEM CONTROL LOGIC

CODE ID. NO. 80091 | SIZE D
SCALE: N.T.S.
EFD NO.
STA. PROJ. NO.
SPEC. NO.
CONSTR. CONTR. NO. N62470-93-D-3033
NAVFAC DRAWING NO.
SHEET 18 OF 18
E-3

APPENDIX A

CONSTRUCTION SCHEDULE

ID	Task Name	Dur	Start	Finish
1	**D.O. #0050 - Tank Farm C, MCAS Cherry Point, NC**	303d	3/4/98	4/30/99
2	**Mobilization and Preparatory Work**	78d	3/4/98	6/19/98
3	Award of Work	0d	3/4/98	3/4/98
4	Pre-Work Plan Sampling Event	5d	3/9/98	3/13/98
5	Prepare Initial General Site Work Plan	40d	3/16/98	5/8/98
6	Gov't. Review of General Site Work Plan	5d	5/11/98	5/15/98
7	Finalize General Site Work Plan	5d	5/18/98	5/22/98
8	Gov't. Approval of General Site Work Plan	0d	5/22/98	5/22/98
9	Preconstruction Confernece	5d	5/25/98	5/29/98
10	Procurement	10d	6/1/98	6/12/98
11	Mobilization	0d	6/15/98	6/15/98
12	Setup/Construct Temp Facilities	5d	6/15/98	6/19/98
13	Locate Underground Utilities	5d	6/15/98	6/19/98
14	Surveying	5d	6/15/98	6/19/98
15				
16	**Air Sparge/Biosparge, SVE, FPVE**	70d	6/15/98	9/18/98
17	Silt Fence Installation	5d	6/15/98	6/19/98
18	Well Drilling	50d	6/22/98	8/28/98
19	Handling of Cuttings/Water	60d	6/22/98	9/11/98
20	Asphalt and Concrete Demolition for System Installation	5d	8/3/98	8/7/98
21	Trenching Activities	25d	8/10/98	9/11/98
22	Piping Installation Activities	20d	8/17/98	9/11/98
23	Transp/Disposal Activities	20d	8/24/98	9/18/98
24	Site Restoration Activities	5d	9/14/98	9/18/98

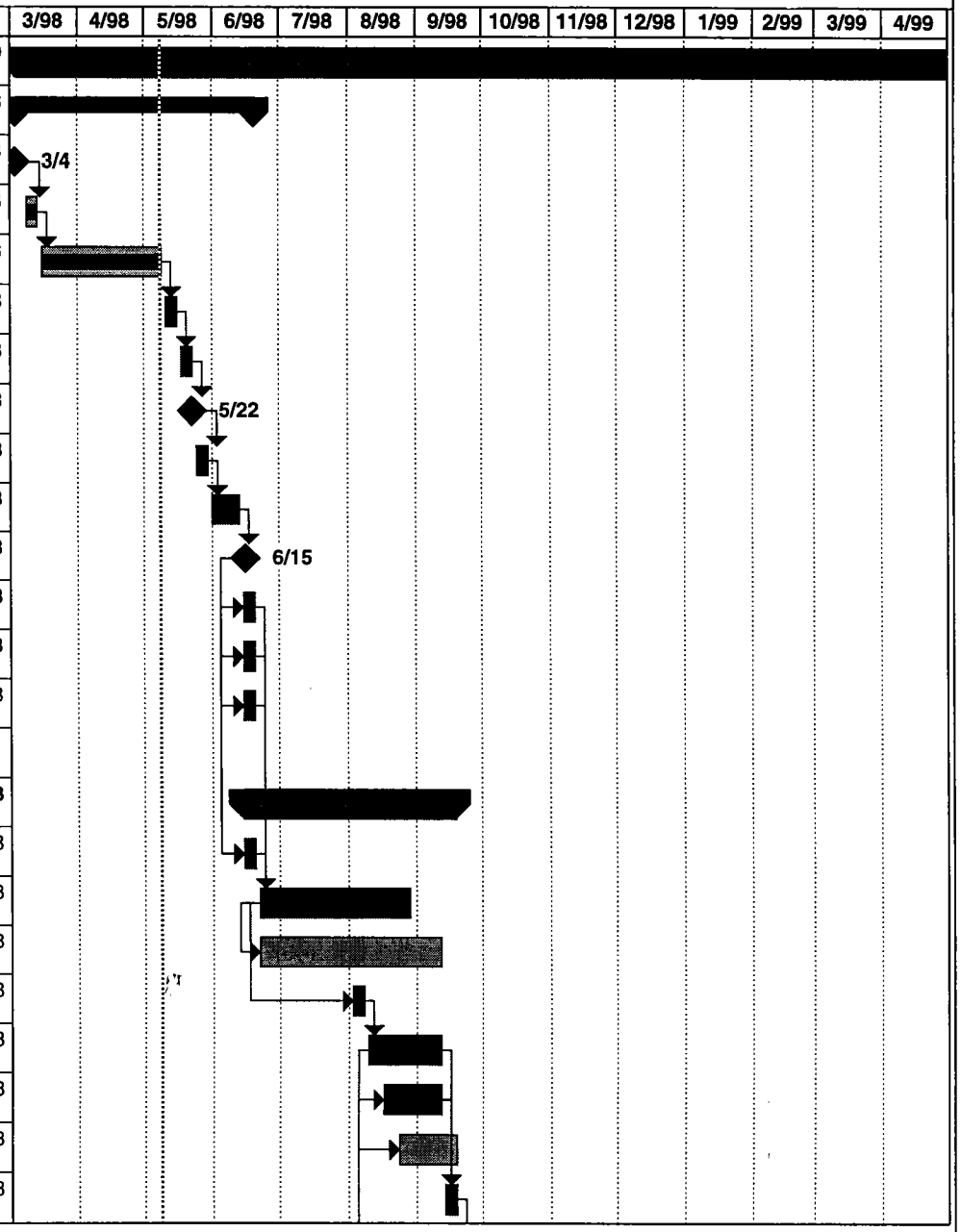

Project: D.O. #0050
Date: 5/8/98

Task
Critical
Progress
Milestone
Summary
Rolled Up Task
Rolled Up Milestone
Rolled Up Progress

ID	Task Name	Dur	Start	Finish
25	**Treatment Systems**	180d	8/24/98	4/30/99
26	Install Manways for Sparge, SVE and FPVE wells	15d	8/24/98	9/11/98
27	Install Air Sparge/Biosparge System	5d	9/21/98	9/25/98
28	Install SVE System	5d	9/28/98	10/2/98
29	Install FPVE System	5d	10/5/98	10/9/98
30	System Electrical connection	15d	10/5/98	10/23/98
31	System Startup	5d	10/26/98	10/30/98
32	Demobilization/Final Site Cleanup	5d	11/2/98	11/6/98
33	System O&M (6 months)	130d	11/2/98	4/30/99

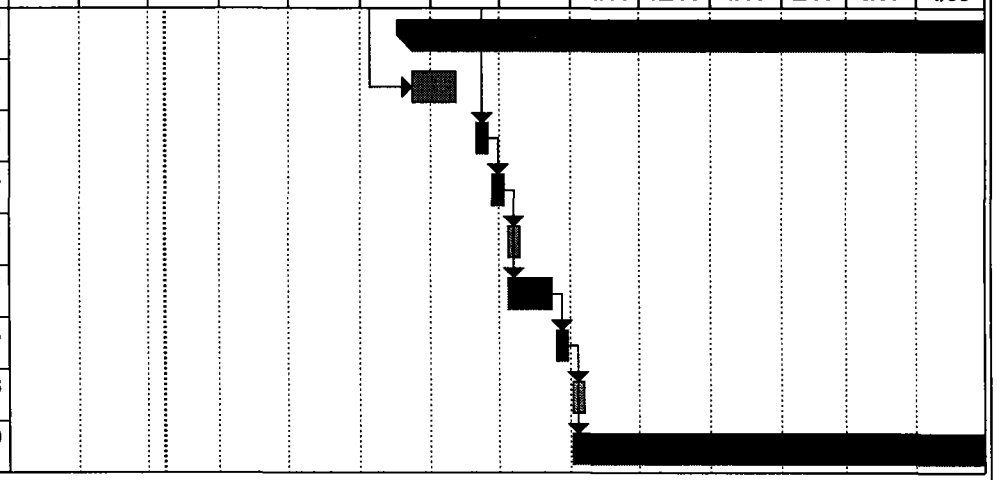

Project: D.O. #0050
Date: 5/8/98

Task
Critical
Progress
Milestone
Summary
Rolled Up Task
Rolled Up Milestone
Rolled Up Progress

APPENDIX B

EROSION AND SEDIMENT CONTROL PLAN

1.0 INTRODUCTION

1.1 PROJECT DESCRIPTION

The work scope includes the construction of a soil and groundwater treatment system consisting of two horizontal air sparge wells, two horizontal biosparge wells, three horizontal soil vapor extraction wells, five horizontal free product vapor extraction wells, system start-up, and operation and maintenance activities.

1.2 EXISTING SITE CONDITIONS

Tank Farm C is the site of a refueling facility for white fleet vehicles and is located north of the intersection of "A" Street and Curtiss Road. The work site topography is mainly flat. Asphalt roads and parking lots and concrete curbs and sidewalks will need to be traversed in order to construct the treatment system.

1.3 ADJACENT AREAS

Since the project site is located within the boundaries of the Marine Corps Air Station, Cherry Point, the adjacent areas are generally well developed with large paved areas.

1.4 OFF SITE AREAS

The construction activities associated with this project will generate excess excavated soil and some asphalt and concrete debris. The soil will be sampled and analyzed for petroleum constituents and will be recycled or treated in accordance with applicable federal, state, and local regulations as outlined in this Work Plan.

1.5 SOILS

Soil borings have been performed at the work site as part of the site characterization studies. Lithologic logs prepared for the site can be found in the Basis of Design prepared by RC&A. These logs indicate the subject area is generally underlain by a lithology which varies from silty sand to clayey sand.

1.6 CRITICAL AREAS

The site has many drainage ditches and culverts which could ultimately allow for erosion and sediment migration. Therefore, silt fencing will be used to prevent soil material from reaching the water and control erosion. Because of the large area of the project, consideration as to the most appropriate location of silt fences on the site during the phases of construction will be updated continually.

1.7 EROSION AND SEDIMENT CONTROL MEASURES

Unless otherwise indicated, all vegetative and structural erosion control measures will be constructed and maintained in a manner which meets the intent of the minimum standards defined under North Carolina Erosion and Sediment Control Regulations.

2.0 STRUCTURAL PRACTICES

2.1 SILT FENCE BARRIER

Silt fences will be erected in the appropriate locations surrounding the construction for the Tank Farm C remediation project. Weather conditions will be taken into consideration for other areas which may be affected by open trenches and soil stockpiles. Silt fence will be installed when rain or wind indicate possible off site migration of soil material. Silt fence barriers and straw hay bales will be available at the work site in the event unforeseen circumstances warrant the use of sediment control measures. A detail of the staked silt fence installation is proved as Detail P, **Figure C-15**.

2.2 STORM DRAIN INLET PROTECTION

Storm drains located within the drainage areas of the construction sites will be protected from sediment laden waters by use of filter fabric in grassy areas and stone filter covers along paved access road gutters.

3.0 VEGETATIVE PRACTICES

3.1 MULCH

Straw or hay mulch will be applied to reseeded areas to reduce gully erosion and promote seed germination.

4.0 MANAGEMENT STRATEGIES

The following erosion and sediment control management strategies will be maintained during project activities.

- The Project Superintendent will be responsible for the installation and maintenance of the erosion and sediment control features.

- Erosion and sediment control features will be installed as the first step of construction operations.
- Seeding and stabilization will follow immediately after final grading is completed. After achieving adequate stabilization, the erosion and sediment control features will be removed.
- Asphalt and concrete will be restored after all pipes are installed and tested.
- Soil stockpiles will be covered to reduce chances of blowing soil.

APPENDIX C

TRANSPORTATION AND DISPOSAL PLAN

1.0 OFF SITE WASTE DISPOSAL

1.1 WASTE IDENTIFICATION AND DOCUMENTATION

J.A. Jones will review waste analyses and any historical information for each waste type to facilitate the preparation of manifest packages for submittal to the AROICC or the EMD. Because contaminants identified at the site are attributable to petroleum contamination, it is anticipated that no hazardous waste will be generated during on site project activities. However, the NTR will be notified under the unlikely event hazardous waste is generated during project activities.

If hazardous waste is generated at the site, then J.A. Jones will use the specific provisions outlined in 40 CFR Parts 261, 262, 268, 302, and 49 CFR Part 172, to evaluate waste streams for characteristic and listed wastes, proper shipping codes, and appropriate disposal methods. The complete manifest package (waste manifests, waste profile sheets, analytical results, and other shipping information) will be certified by the on site regulatory specialist before wastes are transported off the Marine Corps Air Station. J.A. Jones will submit the completed manifest package for generator designation, review, and approval. No hazardous wastes will be transported without approval and manifest signature from the AROICC.

1.2 SELECTION OF OFF SITE TRANSPORTER AND TREATMENT AND DISPOSAL FACILITIES

No waste material will be transported off site until written approval to receive the waste has been provided by the selected treatment or disposal facility. Selection of the transporter and treatment or recycling facility will be based on the review of the received bid submittals.

1.2.1 Transporter

The selected transporter will haul any petroleum-impacted soil or water waste stream generated during the project to the selected treatment or recycling facility. If the waste is non-hazardous, a non-hazardous waste hauler may be selected. A non-hazardous waste hauler is not required to have a USEPA transportation identification number. USEPA identification numbers are required only for hazardous waste transportation companies.

1.2.2 Treatment Facility

Any petroleum contaminated soil excavated at the site is will be treated using thermal treatment or bioremediation at a disposal facility permitted to accept petroleum contaminated soil.

Any petroleum contaminated water generated at the site will be treated using physical and/or chemical treatment techniques at a disposal facility permitted to accept petroleum contaminated water.

Where appropriate, any petroleum-impacted soil or water generated during site activities will be treated or recycled at the Marine Corps Air Station. With Navy approval, petroleum-impacted groundwater will be hauled to an operational groundwater recovery and treatment system at the Marine Corps Air Station. Delivery of the petroleum-impacted groundwater will be based on analytical results and hydraulic loading requirements of the selected groundwater recovery and treatment system.

1.3 PACKAGING, LABELING, AND TRANSPORTATION OF CONTAMINATED WASTE

1.3.1 Packaging and Labeling

All non-hazardous and RCRA hazardous waste being prepared for transport off site will be classified, containerized, and labeled according to applicable USEPA and USDOT regulations (40 CFR Parts 262 and 263, 49 CFR Parts 172, 173, and 178). If necessary, J.A. Jones will require hazardous waste transportation personnel to be trained in accordance with DOT regulations (49 CFR Part 172, SubPart H).

1.3.2 Transportation

J.A. Jones will verify that only waste types and quantities specified by the completed manifest package are loaded in vehicles identified for off site transportation. If necessary, J.A. Jones will also verify that materials are properly containerized, labeled, and loaded, and that the proper placards are placed on the transport vehicle prior to departure.

APPENDIX D

TASK-SPECIFIC HAZARD ANALYSIS AND CHEMICAL AND PHYSICAL PROPERTIES OF KNOWN SITE CONTAMINANTS

HAZARD ANALYSIS

ACTIVITY Mobilization/Equipment Setup/Construction of Temporary Facilities/ Treatment System Installation/ Treatment System Connections/ Demobilization

ANALYZED BY/DATE C. Myers

REVIEWED BY/DATE _____

PRINCIPAL STEPS	POTENTIAL HAZARDS	RECOMMENDED CONTROLS
1. Mobilization 2. Equipment set-up 3. Construction of temporary facilities 4. Treatment building and system installation 5. Demobilization	1. Slip, trip, fall hazards 2. Heavy equipment 3. Noise 4. Traffic	1. Inspect work area for slip, trip, fall hazards. Good housekeeping. 2. Trained heavy equipment operators. Routine Inspections. 3. Utilize hearing protection. 4. Restrict area to necessary traffic.

EQUIPMENT TO BE USED	INSPECTION REQUIREMENTS	TRAINING REQUIREMENTS
1. Small hand tools 2. Heavy equipment for equipment set-up, system installation, and construction of temporary facilities, and treatment building	1. Inspect all equipment in accordance with manufacturer's recommendations. 2. Rigging, as necessary.	1. HAZWOPER, 40-hour health and safety training, as required 2. Heavy equipment operation 3. Rigging

HAZARD ANALYSIS

ACTIVITY Hand Excavation near Utilities/ Machine Excavation And Backfilling/Treatment System Installation/ Pipe Trenching ANALYZED BY/DATE C. Myers REVIEWED BY/DATE _____

PRINCIPAL STEPS	POTENTIAL HAZARDS	RECOMMENDED CONTROLS
1. Locate areas requiring trenching or excavating 2. Mobilize equipment 3. Trench and/or excavate soils	1. Slip, trip, fall hazards 2. Vehicular accidents 3. Subsurface utilities 4. Contaminant exposures 5. Cave-ins 6. Noise	1. Survey areas for slip, trip, fall hazards. Good housekeeping 2. Trained operators 3. Secure excavation permit 4. Work upwind where possible 5. Provide ambient air monitoring 6. Routine excavation inspections. Shore/slope, where necessary 7. Utilize hearing protection

EQUIPMENT TO BE USED	INSPECTION REQUIREMENTS	TRAINING REQUIREMENTS
1. Backhoe 2. Air sampling equipment	1. Inspect equipment daily 2. Maintain calibration in accordance with manufacturer's specifications	1. HAZWOPER, 40-hour health and safety training, as required 2. Heavy equipment operator training

HAZARD ANALYSIS

ACTIVITY Concrete and Asphalt Placement ANALYZED BY/DATE C. Myers REVIEWED BY/DATE _____

PRINCIPAL STEPS	POTENTIAL HAZARDS	RECOMMENDED CONTROLS
1. Grade and compact subbase 2. Place concrete and asphalt 3. Testing and analysis	1. Slip, trip, fall hazards 2. Contaminant exposures 3. Motorized equipment	1. Work upwind, where possible 2. Provide ambient air monitoring 3. Provide personnel protection equipment 4. Use ground guides for heavy equipment 5. Maintain work site cleanliness

EQUIPMENT TO BE USED	INSPECTION REQUIREMENTS	TRAINING REQUIREMENTS
1. Sampling equipment 2. Flame Ionization Detector 3. Backhoe 4. Compactor 5. Concrete vibrator and floats	1. Inspect and calibrate sampling and air monitoring equipment in accordance with manufacturer's recommendations 2. Inspect all equipment in accordance with manufacturer's recommendations	1. HAZWOPER, 40-hour health and safety training, as required 2. Air monitoring equipment 3. Sample collection equipment 4. Heavy equipment operation

HAZARD ANALYSIS

ACTIVITY Soil/Water Sampling Surface Water Control ANALYZED BY/DATE C. Myers REVIEWED BY/DATE

PRINCIPAL STEPS	POTENTIAL HAZARDS	RECOMMENDED CONTROLS
1. Soil/Water Sampling 2. Surface Water Control	1. Slip, trip, fall hazards 2. Containment exposures	1. Work upwind, when possible. 2. Provide ambient air monitoring 3. Provide personnel protection equipment

EQUIPMENT TO BE USED	INSPECTION REQUIREMENTS	TRAINING REQUIREMENTS
1. Sampling equipment 2. Flame Ionization Detector 3. Backhoe	1. Inspect and calibrate sampling and air monitoring equipment in accordance with manufacturer's recommenfations. 2. Inspect surface water diversion trenches and silt fences, as necessary.	1. Hazwoper, 40-hour health and safety training, as required. 2. Air equipment monitoring 3. Sample collection equipment

HAZARD ANALYSIS

ACTIVITY Operation and Maintenance ANALYZED BY/DATE C. Myers REVIEWED BY/DATE _____

PRINCIPAL STEPS	POTENTIAL HAZARDS	RECOMMENDED CONTROLS
1. Operation and maintenance of groundwater treatment system	1. Electrical sources 2. Pneumatic sources 3. Machinery hazards 4. Contaminant exposure	1. Lockout/Tagout procedures 2. Personnel protection equipment

EQUIPMENT TO BE USED	INSPECTION REQUIREMENTS	TRAINING REQUIREMENTS
1. Hand tools	1. Inspection per manufacturer's specifications	1. HAZWOPER, 40-hour health and safety training, as required 2. Lockout/Tagout as required

HAZARD ANALYSIS

ACTIVITY Site Restoration ANALYZED BY/DATE C. Myers REVIEWED BY/DATE _____

PRINCIPAL STEPS	POTENTIAL HAZARDS	RECOMMENDED CONTROLS
1. Backfilling 2. Compaction	1. Vehicle accidents 2. Noise 3. Dust	1. Maintain traffic control 2. Initialize hearing protection 3. Monitor for visible dust. Use dust suppression, as appropriate

EQUIPMENT TO BE USED	INSPECTION REQUIREMENTS	TRAINING REQUIREMENTS
1. Backhoe 2. Compactor	1. Inspection in accordance with manufacturer's specifications	1. HAZWOPER, 40-hour health and safety training, as required 2. Heavy equipment operation

Genium Publishing Corporation
1145 Catalyn Street
Schenectady, NY 12303-1836 USA
(518) 377-8854

Material Safety Data Sheets Collection:

Sheet No. 467
Automotive Gasoline, Lead-free

Issued: 10/81 Revision: A, 9/91

Section 1. Material Identification

Automotive Gasoline, Lead-free, Description: A mixture of volatile hydrocarbons composed mainly of branched-chain paraffins, cycloparaffins, olefins, naphthenes, and aromatics. In general, gasoline is produced from petroleum, shale oil, Athabasca tar sands, and coal. Motor gasolines are made chiefly by cracking processes, which convert heavier petroleum fractions into more volatile fractions by thermal or catalytic decomposition. Widely used as fuel in internal combustion engines of the spark-ignited, reciprocating type. Automotive gasoline has an octane number of approximately 90. A high content of aromatic hydrocarbons and a consequent high toxicity are also associated with a high octane rating. Some gasolines sold in the US contain a minor proportion of tetraethyllead, which is added in concentrations not exceeding 3 ml per gallon to prevent engine "knock." However, methyl-tert-butyl ether (MTBE) has almost completely replaced tetraethyllead.

Other Designations: CAS No. 8006-61-9, benzin, gasoline, gasolene, motor spirits, natural gasoline, petrol.

Manufacturer: Contact your supplier or distributor. Consult latest *Chemical Week Buyers' Guide*[73] for a suppliers list.

R 1
I 2
S 2*
K 4
* Skin absorption

NFPA
3 / 1 / 0 / -

HMIS
H 2
F 3
R 1
PPG†
† Sec. 8

Cautions: Inhalation of automotive gasoline vapors can cause intense burning in throat and lungs, central nervous system (CNS) depression, and possible fatal pulmonary edema. Gasoline is a dangerous fire and explosion hazard when exposed to heat and flames.

Section 2. Ingredients and Occupational Exposure Limits

Automotive gasoline, lead-free*

1990 OSHA PELs
8-hr TWA: 300 ppm, 900 mg/m^3
15-min STEL: 500 ppm, 1500 mg/m^3

1990-91 ACGIH TLVs
TWA: 300 ppm, 890 mg/m^3
STEL: 500 ppm, 1480 mg/m^3

1990 NIOSH REL
None established

1985-86 Toxicity Data*
Man, inhalation, TC_{Lo}: 900 ppm/1 hr; toxic effects include sense organs and special senses (conjunctiva irritation), behavioral (hallucinations, distorted perceptions), lungs, thorax, or respiration (cough)
Human, eye: 140 ppm/8 hr; toxic effects include mild irritation
Rat, inhalation, LC_{50}: 300 g/m^3/5 min

* A typical modern gasoline composition is 80% paraffins, 14% aromatics, and 6% olefins. The mean benzene content is approximately 1%. Other additives include sulfur, phosphorus, and MTBE.
† See NIOSH, *RTECS* (LX3300000), for additional toxicity data.

Section 3. Physical Data

Boiling Point: Initially, 102 °F (39 °C); after 10% distilled, 140 °F (60 °C); after 50% distilled, 230 °F (110 °C); after 90% distilled, 338 °F (170 °C); final boiling point, 399 °F (204 °C)
Vapor Density (air = 1): 3.0 to 4.0

Density/Specific Gravity: 0.72 to 0.76 at 60 °F (15.6 °C)
Water Solubility: Insoluble

Appearance and Odor: A clear (gasoline may be colored with dye), mobile liquid with a characteristic odor recognizable at about 10 ppm in air.

Section 4. Fire and Explosion Data

Flash Point: -45 °F (-43 °C)	Autoignition Temperature: 536 to 853 °F (280 to 456 °C)	LEL: 1.3% v/v	UEL: 6.0% v/v

Extinguishing Media: Use dry chemical, carbon dioxide, or alcohol foam as extinguishing media. Use of water may be ineffective to extinguish fire, but use water spray to knock down vapors and to cool fire-exposed drums and tanks to prevent pressure rupture. Do not use a solid stream of water since it may spread the fuel.

Unusual Fire or Explosion Hazards: Automobile gasoline is an OSHA Class IB flammable liquid and a dangerous fire and explosion hazard when exposed to heat and flames. Vapors can flow to an ignition source and flash back. Automobile gasoline can also react violently with oxidizing agents.

Special Fire-fighting Procedures: Isolate hazard area and deny entry. Since fire may produce toxic fumes, wear a self-contained breathing apparatus (SCBA) with a full facepiece operated in pressure-demand or positive-pressure mode, and full protective clothing. When the fire is extinguished, use nonsparking tools for cleanup. Be aware of runoff from fire control methods. Do not release to sewers or waterways.

Section 5. Reactivity Data

Stability/Polymerization: Automotive gasoline is stable at room temperature in closed containers under normal storage and handling conditions. Hazardous polymerization cannot occur.

Chemical Incompatibilities: Automotive gasoline can react with oxidizing materials such as peroxides, nitric acid, and perchlorates.

Conditions to Avoid: Avoid heat and ignition sources.

Hazardous Products of Decomposition: Thermal oxidative decomposition of automotive gasoline can produce oxides of carbon and partially oxidized hydrocarbons.

Section 6. Health Hazard Data

Carcinogenicity: In 1990 reports, the IARC list gasoline as a possible human carcinogen (Group 2B). Although the IARC has assigned an overall evaluation to gasoline, it has not assigned an overall evaluation to specific substances within this group (inadequate human evidence).
Summary of Risks: Gasoline vapors are considered moderately poisonous. Vapor inhalation can cause central nervous system (CNS) depression and mucous membrane and respiratory tract irritation. Brief inhalations of high concentrations can cause a fatal pulmonary edema. Reported responses to gasoline vapor concentrations are: 160 to 270 ppm causes eye and throat irritation in several hours; 500 to 900 ppm causes eye, nose, and throat irritation, and dizziness in 1 hr; and 2000 ppm produces mild anesthesia in 30 min. Higher concentrations are intoxicating in 4 to 10 minutes. If large areas of skin are exposed to gasoline, toxic amounts may be absorbed. Repeated or prolonged skin exposure causes dermatitis. Certain individuals may develop hypersensitivity. Ingestion can cause CNS depression. Pulmonary aspiration after ingestion can cause severe pneumonitis. In adults, ingestion of 20 to 50 g gasoline may produce severe symptoms of poisoning.
Medical Conditions Aggravated by Long-Term Exposure: None reported.
Target Organs: Skin, eye, respiratory and central nervous systems.
Primary Entry Routes: Inhalation, ingestion, skin contact.
Acute Effects: Acute inhalation produces intense nose, throat, and lung irritation; headaches; blurred vision; conjunctivitis; flushing of the face; mental confusion; staggering gait; slurred speech; and unconsciousness, sometimes with convulsions. Ingestion causes inebriation (drunkenness), vomiting, dizziness, fever, drowsiness, confusion, and cyanosis (a blue to dark purplish coloration of skin and mucous membrane caused by lack of oxygen). Aspiration causes choking, cough, shortness of breath, increased rate of respiration, excessively rapid heartbeat, fever, bronchitis, and pneumonitis. Other symptoms following acute exposure include acute hemorrhage of the pancreas, fatty degeneration of the liver and kidneys, and passive congestion of spleen.
Chronic Effects: Chronic inhalation results in appetite loss, nausea, weight loss, insomnia, and unusual sensitivity (hyperesthesia) of the distal extremities followed by motor weakness, muscular degeneration, and diminished tendon reflexes and coordination. Repeated skin exposure can cause blistering, drying, and lesions.
FIRST AID
Eyes: Gently lift the eyelids and flush immediately and continuously with flooding amounts of water until transported to an emergency medical facility. Consult a physician immediately.
Skin: *Quickly* remove contaminated clothing. Rinse with flooding amounts of water for at least 15 min. For reddened or blistered skin, consult a physician. Wash affected area with soap and water.
Inhalation: Remove exposed person to fresh air and support breathing as needed.
Ingestion: Never give anything by mouth to an unconscious or convulsing person. If ingested, *do not induce vomiting* due to aspiration hazard. Give conscious victim a mixture of 2 tablespoons of activated charcoal mixed in 8 oz of water to drink. Consult a physician immediately.
After first aid, get appropriate in-plant, paramedic, or community medical support.

Section 7. Spill, Leak, and Disposal Procedures

Spill/Leak: Notify safety personnel, evacuate all unnecessary personnel, remove heat and ignition sources, and provide maximum explosion-proof ventilation. Cleanup personnel should protect against vapor inhalation and liquid contact. Use nonsparking tools. Take up small spills with sand or other noncombustible adsorbent. Dike storage areas to control leaks and spills. Follow applicable OSHA regulations (29 CFR 1910.120).
Aquatic Toxicity: Bluegill, freshwater, LC_{50}, 8 ppm/96 hr.
Disposal: Contact your supplier or a licensed contractor for detailed recommendations. Follow applicable Federal, state, and local regulations.
EPA Designations
RCRA Hazardous Waste (40 CFR 261.21): Characteristic of ignitability
CERCLA Hazardous Substance (40 CFR 302.4): Not listed
SARA Extremely Hazardous Substance (40 CFR 355): Not listed
SARA Toxic Chemical (40 CFR 372.65): Not listed
OSHA Designations
Listed as an Air Contaminant (29 CFR 1910.1000, Table Z-1-A)

Section 8. Special Protection Data

Goggles: Wear protective eyeglasses or chemical safety goggles, per OSHA eye- and face-protection regulations (29 CFR 1910.133). Since contact lens use in industry is controversial, establish your own policy.
Respirator: Seek professional advice prior to respirator selection and use. Follow OSHA respirator regulations (29 CFR 1910.134) and, if necessary, wear a NIOSH-approved respirator. There are no specific NIOSH recommendations. However, for vapor concentrations not immediately dangerous to life or health, use chemical cartridge respirator equipped with organic vapor cartridge(s), or a supplied-air respirator. For emergency or nonroutine operations (cleaning spills, reactor vessels, or storage tanks), wear an SCBA. *Warning! Air-purifying respirators do not protect workers in oxygen-deficient atmospheres.*
Other: Wear impervious gloves, boots, aprons, and gauntlets to prevent prolonged or repeated skin contact. Materials such as neoprene or polyvinyl alcohol provide excellent/good resistance for protective clothing. **Note:** Resistance of specific materials can vary from product to product.
Ventilation: Provide general and local explosion-proof exhaust ventilation systems to maintain airborne concentrations below the OSHA PELs (Sec. 2). Local exhaust ventilation is preferred since it prevents contaminant dispersion into the work area by controlling it at its source.[103]
Safety Stations: Make available in the work area emergency eyewash stations, safety/quick-drench showers, and washing facilities.
Contaminated Equipment: Remove this material from your shoes and equipment. Launder contaminated clothing before wearing.
Comments: Never eat, drink, or smoke in work areas. Practice good personal hygiene after using this material, especially before eating, drinking, smoking, using the toilet, or applying cosmetics.

Section 9. Special Precautions and Comments

Storage Requirements: Store in closed containers in a cool, dry, well-ventilated area away from heat and ignition sources and strong oxidizing agents. Protect containers from physical damage. Avoid direct sunlight. Storage must meet requirements of OSHA Class IB liquid. Outside or detached storage preferred.
Engineering Controls: Avoid vapor inhalation and skin or eye contact. Consider a respiratory protection program that includes regular training, maintenance, inspection, and evaluation. Indoor use of this material requires explosion-proof exhaust ventilation to remove vapors. Only use gasoline as a fuel source due to its volatility and flammable/explosive nature. Practice good personal hygiene and housekeeping procedures. Wear clean work clothing daily.

Transportation Data (49 CFR 172.101, .102)

DOT Shipping Name: Gasoline (*including casing-head and natural*)
DOT Hazard Class: Flammable liquid
ID No.: UN1203
DOT Label: Flammable liquid
DOT Packaging Exceptions: 173.118
DOT Packaging Requirements: 173.119

IMO Shipping Name: Gasoline
IMO Hazard Class: 3.1
ID No.: UN1203
IMO Label: Flammable liquid
IMDG Packaging Group: II

MSDS Collection **References:** 26, 73, 89, 100, 101, 103, 124, 126, 127, 132, 133, 136, 138, 140, 143, 146, 153, 159
Prepared by: M Allison, BS; **Industrial Hygiene Review:** DJ Wilson, CIH; **Medical Review:** W Silverman, MD; **Edited by:** JR Stuart, MS

Copyright © 1991 by Genium Publishing Corporation. Any commercial use or reproduction without the publisher's permission is prohibited. Judgments as to the suitability of information herein for the purchaser's purposes

Genium Publishing Corporation
1145 Catalyn Street
Schenectady, NY 12303-1836 USA
(518) 377-8854

Material Safety Data Sheets Collection:

Sheet No. 470
Diesel Fuel Oil No. 2-D

Issued: 10/81 Revision: A, 11/90

Section 1. Material Identification

33

Diesel Fuel Oil No. 2-D Description: Diesel fuel is obtained from the middle distillate in petroleum separation; a distillate oil of low sulfur content. It is composed chiefly of unbranched paraffins. Diesel fuel is available in various grades, one of which is synonymous with fuel oil No. 2-D. This diesel fuel oil requires a minimum Cetane No. (efficiency rating for diesel fuel comparable to octane number ratings for gasoline) of 40 (ASTM D613). Used as a fuel for trucks, ships, and other automotive engines; as mosquito control (coating on breeding waters); and for drilling muds.

Other Designations: CAS No. 68334-30-5, diesel fuel.

Manufacturer: Contact your supplier or distributor. Consult the latest *Chemicalweek Buyers' Guide*[73] for a suppliers list.

Cautions: Diesel fuel oil No. 2-D is a skin irritant and central nervous depressant with high mist concentrations. It is an environmental hazard and moderate fire risk.

R	1
I	-
S	2
K	2

NFPA

HMIS
H 0
F 2
R 0
PPG*
* Sec. 8

Section 2. Ingredients and Occupational Exposure Limits

Diesel fuel oil No. 2-D*

1989 OSHA PEL	1990-91 ACGIH TLV	1988 NIOSH REL	1985-86 Toxicity Data‡
None established	Mineral Oil Mist TWA: 5 mg/m³† STEL: 10 mg/m³	None established	Rat, oral, LD_{50}: 9 g/kg produces gastrointestinal (hypermotility, diarrhea effects

* Diesel fuel No. 2-D tends to be low in aromatics and high in paraffinics. This fuel oil is complex mixture of: 1) >95% paraffinic, olefinic, naphthenic, and aromatic hydrocarbons, 2) sulfur (<0.5%), and 3) benzene (<100 ppm). [A low benzene level reduces carcinogenic risk. Fuel oils can be exempted under the benzene standard (29 CFR 1910.1028)]. Although low in the fuel itself, benzene concentrations are likely to be much higher in processing areas.
† As sampled by nonvapor-collecting method.
‡ Monitor NIOSH, *RTECS* (HZ1800000), for future toxicity data.

Section 3. Physical Data

Boiling Point Range: 340 to 675 °F (171 to 358 °C)
Viscosity: 1.9 to 4.1 centistoke at 104 °F (40 °C)
Specific Gravity: <0.86
Water Solubility: Insoluble

Appearance and Odor: Brown, slightly viscous liquid.

Section 4. Fire and Explosion Data

Flash Point: 125 °F (52 °C) min.	Autoignition Temperature: >500 °F (932 °C)	LEL: 0.6% v/v	UEL: 7.5% v/v

Extinguishing Media: Use dry chemical, carbon dioxide, or foam to fight fire. Use a water spray to cool fire exposed containers. Do not use a forced water spray directly on burning oil since this will scatter the fire. Use a smothering technique for extinguishing fire.

Unusual Fire or Explosion Hazards: Diesel fuel oil No. 2-D is a OSHA Class II combustible liquid. Its volatility is similar to that of gas oil. Vapors may travel to a source of ignition and flash back.

Special Fire-fighting Procedures: Isolate hazard area and deny entry. Since fire may produce toxic fumes, wear a self-contained breathing apparatus (SCBA) with a full facepiece operated in the pressure-demand or positive-pressure mode and full protective clothing. If feasible, remove containers from fire. Be aware of runoff from fire control methods. Do not release to sewers or waterways due to pollution and fire or explosion hazard.

Section 5. Reactivity Data

Stability/Polymerization: Diesel fuel oil No. 2-D is stable at room temperature in closed containers under normal storage and handling conditions. Hazardous polymerization cannot occur.

Chemical Incompatibilities: It is incompatible with strong oxidizing agents; heating greatly increases the fire hazard.

Conditions to Avoid: Avoid heat and ignition sources.

Hazardous Products of Decomposition: Thermal oxidative decomposition of diesel fuel oil No. 2-D can produce various hydrocarbons and hydrocarbon derivatives, and other partial oxidation products such as carbon dioxide, carbon monoxide, and sulfur dioxide.

Section 6. Health Hazard Data

Car enicity: Although the IARC has not assigned an overall evaluation to diesel fuels as a group, it has evaluated occupational exposures in ett a refining as an IARC probable human carcinogen (Group 2A). It has evaluated distillate (light) diesel oils as not classifiable as human arcin ens (Group 3).

Sun y of Risks: Although diesel fuel's toxicologic effects should resemble kerosine's, they are somewhat more pronounced due to additives uch ulfurized esters. Excessive inhalation of aerosol or mist can cause respiratory tract irritation, headache, dizziness, nausea, vomiting, and oss of coordination, depending on concentration and exposure time. When removed from exposure area, affected persons usually recover ompletely. If vomiting occurs after ingestion and if oil is aspirated into the lungs, hemorrhaging and pulmonary edema, progressing to renal involvement and chemical pneumonitis, may result. A comparative ratio of oral to aspirated lethal doses may be 1 pt vs. 5 ml. Aspiration may also esult in transient CNS depression or excitement. Secondary effects may include hypoxia (insufficient oxygen in body cells), infection, pneumatocele formation, and chronic lung dysfunction. Inhalation may result in euphoria, cardiac dysrhythmias, respiratory arrest, and CNS toxicity. Prolonged or repeated skin contact may irritate hair follicles and block sebaceous glands, producing a rash of acne pimples and spots, usually on rms and legs.

Medical Conditions Aggravated by Long-Term Exposure: None reported.

Target Organs: Central nervous system, skin, and mucous membranes.

Primary Entry Routes: Inhalation, ingestion.

Acute Effects: Systemic effects from ingestion include gastrointestinal irritation, vomiting, diarrhea, and in severe cases central nervous system epression, progressing to coma or death. Inhalation of aerosols or mists may result in increased rate of respiration, tachycardia (excessively rapid eart beat), and cyanosis (dark purplish discoloration of the skin and mucous membranes caused by deficient blood oxygenation).

Chronic Effects: Repeated contact with the skin causes dermatitis.

FIRST AID

Eyes: Gently lift the eyelids and flush immediately and continuously with flooding amounts of water until transported to an emergency medical acility. Consult a physician immediately.

Skin: *Quickly* remove contaminated clothing. Rinse with flooding amounts of water for at least 15 min. If large areas of the body have been xposed or if irritation persists, get medical help immediately. Wash affected area with soap and water.

Inhalation: Remove exposed person to fresh air and support breathing as needed.

Ingestion: Never give anything by mouth to an unconscious or convulsing person. If ingested, *do not induce vomiting* due to aspiration hazard. Contact a physician immediately. Position to avoid aspiration.

After first aid, get appropriate in-plant, paramedic, or community medical support.

Note to Physicians: Gastric lavage is contraindicated due to aspiration hazard. Preferred antidotes are charcoal and milk. In cases of severe aspiration pneumonitis, consider monitoring arterial blood gases to ensure adequate ventilation. Observe the patient for 6 hr. If vital signs become abnormal or symptoms develop, obtain a chest x-ray.

Section 7. Spill, Leak, and Disposal Procedures

Spill/Leak: Notify safety personnel, evacuate area for large spills, remove all heat and ignition sources, and provide maximum explosion-proof ventilation. Cleanup personnel should protect against vapor inhalation and liquid contact. Clean up spills promptly to reduce fire or vapor hazards. Use nonconbustible absorbent material to pick up small spills or residues. For large spills, dike far ahead to contain. Pick up liquid for reclamation sposal. Do not release to sewers or waterways due to health and fire and/or explosion hazard. Follow applicable OSHA regulations (29 CF 0.120). Diesel fuel oil No. 2-D spills may be environmental hazards. Report large spills.

Dis l: Contact your supplier or a licensed contractor for detailed recommendations. Follow applicable Federal, state, and local regulations.

EP signations

RCR Hazardous Waste (40 CFR 261.21): Ignitable waste

CERCLA Hazardous Substance (40 CFR 302.4): Not listed

SARA Extremely Hazardous Substance (40 CFR 355): Not listed

SARA Toxic Chemical (40 CFR 372.65): Not listed

OSHA Designations

Air Contaminant (29 CFR 1910.1000, Subpart Z): Not listed

Section 8. Special Protection Data

Goggles: Wear protective eyeglasses or chemical safety goggles, per OSHA eye- and face-protection regulations (29 CFR 1910.133).

Respirator: Seek professional advice prior to respirator selection and use. Follow OSHA respirator regulations (29 CFR 1910.134) and, if necessary, use a NIOSH-approved respirator with a mist filter and organic vapor cartridge. For emergency or nonroutine operations (cleaning spills, reactor vessels, or storage tanks), wear an SCBA. *Warning! Air-purifying respirators do not protect workers in oxygen-deficient atmospheres.*

Other: Wear impervious gloves, boots, aprons, and gauntlets to prevent skin contact.

Ventilation: Provide general and local explosion-proof ventilation systems to maintain airborne concentrations that promote worker safety and productivity. Local exhaust ventilation is preferred since it prevents contaminant dispersion into the work area by controlling it at its source.[103]

Safety Stations: Make available in the work area emergency eyewash stations, safety/quick-drench showers, and washing facilities.

Contaminated Equipment: Never wear contact lenses in the work area: soft lenses may absorb, and all lenses concentrate, irritants. Remove this material from your shoes and equipment. Launder contaminated clothing before wearing.

Comments: Never eat, drink, or smoke in work areas. Practice good personal hygiene after using this material, especially before eating, drinking, smoking, using the toilet, or applying cosmetics.

Section 9. Special Precautions and Comments

Storage Requirements: Use and storage conditions should be suitable for a OSHA Class II combustible liquid. Store in closed containers in a well-ventilated area away from heat and ignition sources and strong oxidizing agents. Protect containers from physical damage. To prevent static sparks, electrically ground and bond all containers and equipment used in shipping, receiving, or transferring operations. Use nonsparking tools and explosion-proof electrical equipment. No smoking in storage or use areas.

Engineering Controls: Avoid vapor or mist inhalation and prolonged skin contact. Wear protective rubber gloves and chemical safety glasses where contact with liquid or high mist concentration may occur. Additional suitable protective clothing may be required depending on working conditions. Institute a respiratory protection program that includes regular training, maintenance, inspection, and evaluation. Practice good personal hygiene and housekeeping procedures. Do not wear oil contaminated clothing. At least weekly laundering of work clothes is recommended. Do not put oily rags in pockets. When working with this material, wear gloves or use barrier cream.

Tr ortation Data (49 CFR 172.101)

D ipping Name: Fuel oil

DO Hazard Class: Combustible liquid

ID NA1993

DOT Label: None

DOT Packaging Exceptions: 173.118a

DOT Packaging Requirements: None

MSDS Collection References: 1, 6, 7, 12, 73, 84, 101, 103, 126, 127, 132, 133, 136, 143, 146

Prepared by: MJ Allison, BS; **Industrial Hygiene Review:** DJ Wilson, CIH; **Medical Review:** AC Darlington, MD; **Edited by:** JR Stuart, MS

Copyright © 1990 by Genium Publishing Corporation. Any commercial use or reproduction without the publisher's permission is prohibited. Judgments as to the suitability of information herein for the purchaser's purposes

1 - PRODUCT IDENTIFICATION

PRODUCT NAME: BENZENE
FORMULA: C6H6
FORMULA WT: 78.10
CAS NO.: 71-43-2
NIOSH/RTECS NO.: CY1400000
COMMON SYNONYMS: BENZOL; PHENYL HYDRIDE; COAL NAPHTHA
PRODUCT CODES: 9156,9256,9153,9154,9155,B717,9149
EFFECTIVE: 01/22/87
REVISION #04

PRECAUTIONARY LABELLING

BAKER SAF-T-DATA(TM) SYSTEM

HEALTH	-	4	EXTREME (CANCER CAUSING)
FLAMMABILITY	-	3	SEVERE (FLAMMABLE)
REACTIVITY	-	0	NONE
CONTACT	-	1	SLIGHT

HAZARD RATINGS ARE 0 TO 4 (0 = NO HAZARD; 4 = EXTREME HAZARD).

LABORATORY PROTECTIVE EQUIPMENT

GOGGLES & SHIELD; LAB COAT & APRON; VENT HOOD; PROPER GLOVES; CLASS B EXTINGUISHER

PRECAUTIONARY LABEL STATEMENTS

POISON DANGER
EXTREMELY FLAMMABLE
CAUTION: CONTAINS BENZENE, CANCER HAZARD
HARMFUL IF SWALLOWED, INHALED, OR ABSORBED THROUGH SKIN
EXCEPTIONAL HEALTH HAZARD - READ MATERIAL SAFETY DATA SHEET
KEEP AWAY FROM HEAT, SPARKS, FLAME. AVOID CONTACT WITH EYES, SKIN, CLOTHING. AVOID BREATHING VAPOR. KEEP IN TIGHTLY CLOSED CONTAINER. USE WITH ADEQUATE VENTILATION. WASH THOROUGHLY AFTER HANDLING. IN CASE OF FIRE, USE ALCOHOL FOAM, DRY CHEMICAL, CARBON DIOXIDE - WATER MAY BE INEFFECTIVE. FLUSH SPILL AREA WITH WATER SPRAY.

SAF-T-DATA(TM) STORAGE COLOR CODE: RED STRIPE (STORE SEPARATELY)

2 - HAZARDOUS COMPONENTS

COMPONENT	%	CAS NO.
BENZENE	90-100	71-43-2

3 - PHYSICAL DATA

BOILING POINT: 80 C (176 F) VAPOR PRESSURE(MM HG): 74.6

MELTING POINT: 6 C (43 F) VAPOR DENSITY(AIR=1): 2.77

SPECIFIC GRAVITY: 0.88 (H2O=1) EVAPORATION RATE: N/A (BUTYL ACETATE=1)

SOLUBILITY(H2O): NEGLIGIBLE (LESS THAN 0.1 %) % VOLATILES BY VOLUME: 100

APPEARANCE & ODOR: CLEAR COLORLESS LIQUID HAVING CHARACTERISTIC AROMATIC ODOR.

---

4 - FIRE AND EXPLOSION HAZARD DATA

FLASH POINT (CLOSED CUP: -11 C (12 F) NFPA 704M RATING: 2-3-0

FLAMMABLE LIMITS: UPPER - 8.0 % LOWER - 1.3 %

FIRE EXTINGUISHING MEDIA
USE ALCOHOL FOAM, DRY CHEMICAL OR CARBON DIOXIDE.
(WATER MAY BE INEFFECTIVE.)

SPECIAL FIRE-FIGHTING PROCEDURES
FIREFIGHTERS SHOULD WEAR PROPER PROTECTIVE EQUIPMENT AND SELF-CONTAINED BREATHING APPARATUS WITH FULL FACEPIECE OPERATED IN POSITIVE PRESSURE MODE. MOVE CONTAINERS FROM FIRE AREA IF IT CAN BE DONE WITHOUT RISK. USE WATER TO KEEP FIRE-EXPOSED CONTAINERS COOL.

UNUSUAL FIRE & EXPLOSION HAZARDS
VAPORS MAY FLOW ALONG SURFACES TO DISTANT IGNITION SOURCES AND FLASH BACK. CLOSED CONTAINERS EXPOSED TO HEAT MAY EXPLODE. CONTACT WITH STRONG OXIDIZERS MAY CAUSE FIRE.

TOXIC GASES PRODUCED
CARBON MONOXIDE, CARBON DIOXIDE

---

5 - HEALTH HAZARD DATA

THIS SUBSTANCE IS LISTED AS ACGIH SUSPECT HUMAN CARCINOGEN, NTP HUMAN CARCINOGEN, IARC HUMAN CARCINOGEN (GROUP 1). ACCEPTABLE MAXIMUM PEAK ABOVE THE ACCEPTANCE CEILING CONCENTRATION FOR AN EIGHT-HOUR SHIFT = 50 PPM FOR 10 MINUTES; (PEL) CEILING = 25 PPM.

THRESHOLD LIMIT VALUE (TLV/TWA): 30 MG/M3 (10 PPM)

SHORT-TERM EXPOSURE LIMIT (STEL): 75 MG/M3 (25 PPM)

PERMISSIBLE EXPOSURE LIMIT (PEL): 30 MG/M3 (10 PPM)

TOXICITY:	LD50 (ORAL-RAT)(MG/KG)	- 4894
	LD50 (ORAL-MOUSE)(MG/KG)	- 4700
	LD50 (IPR-RAT)(MG/KG)	- 2.9
	LC50 (INHL-MOUSE-7H) (PPM)	- 9980

CARCINOGENICITY: NTP: YES IARC: YES Z LIST: NO OSHA REG: NO

EFFECTS OF OVEREXPOSURE
INHALATION MAY CAUSE HEADACHE, NAUSEA, VOMITING, DIZZINESS, NARCOSIS, SUFFOCATION, LOWER BLOOD PRESSURE, CENTRAL NERVOUS SYSTEM DEPRESSION. INHALATION OF VAPORS MAY CAUSE SEVERE IRRITATION OR BURNS OF THE

RESPIRATORY SYSTEM, PULMONARY EDEMA, OR LUNG INFLAMMATION.
LIQUID MAY BE IRRITATING TO SKIN AND EYES. PROLONGED SKIN CONTACT MAY RESULT IN DERMATITIS. EYE CONTACT MAY RESULT IN TEMPORARY CORNEAL DAMAGE. INGESTION MAY CAUSE NAUSEA, VOMITING, HEADACHES, DIZZINESS, GASTRO-INTESTINAL IRRITATION, BLURRED VISION, LOWERING OF BLOOD PRESSURE. IRREVERSIBLE INJURY TO BLOOD FORMING TISSUE MAY RESULT FROM CHRONIC LOW LEVEL EXPOSURE.

TARGET ORGANS
BLOOD, CENTRAL NERVOUS SYSTEM, EYES, SKIN, BONE MARROW, RESPIRATORY SYSTEM

MEDICAL CONDITIONS GENERALLY AGGRAVATED BY EXPOSURE
NONE IDENTIFIED

ROUTES OF ENTRY
INGESTION, INHALATION, EYE CONTACT, SKIN CONTACT, ABSORPTION

EMERGENCY AND FIRST AID PROCEDURES
CALL A PHYSICIAN.
IF SWALLOWED, DO NOT INDUCE VOMITING.
IF INHALED, REMOVE TO FRESH AIR. IF NOT BREATHING, GIVE ARTIFICIAL RESPIRATION. IF BREATHING IS DIFFICULT, GIVE OXYGEN.
IN CASE OF CONTACT, IMMEDIATELY FLUSH EYES OR SKIN WITH PLENTY OF WATER FOR AT LEAST 15 MINUTES.

---

6 - REACTIVITY DATA

STABILITY: STABLE HAZARDOUS POLYMERIZATION: WILL NOT OCCUR

CONDITIONS TO AVOID: HEAT, FLAME, OTHER SOURCES OF IGNITION

INCOMPATIBLES: STRONG OXIDIZING AGENTS, SULFURIC ACID, NITRIC ACID

DECOMPOSITION PRODUCTS: CARBON MONOXIDE, CARBON DIOXIDE

---

7 - SPILL AND DISPOSAL PROCEDURES

STEPS TO BE TAKEN IN THE EVENT OF A SPILL OR DISCHARGE
WEAR SELF-CONTAINED BREATHING APPARATUS AND FULL PROTECTIVE CLOTHING. SHUT OFF IGNITION SOURCES; NO FLARES, SMOKING OR FLAMES IN AREA. STOP LEAK IF YOU CAN DO SO WITHOUT RISK. USE WATER SPRAY TO REDUCE VAPORS. TAKE UP WITH SAND OR OTHER NON-COMBUSTIBLE ABSORBENT MATERIAL AND PLACE INTO

CONTAINER FOR LATER DISPOSAL. FLUSH AREA WITH WATER.

J. T. BAKER SOLUSORB(R) SOLVENT ADSORBENT IS RECOMMENDED FOR SPILLS OF THIS PRODUCT.

DISPOSAL PROCEDURE
DISPOSE IN ACCORDANCE WITH ALL APPLICABLE FEDERAL, STATE, AND LOCAL ENVIRONMENTAL REGULATIONS.

EPA HAZARDOUS WASTE NUMBER: U019 (TOXIC WASTE)

 http://www.chem.utah.edu/MSDS/B/BENZENE

8 - PROTECTIVE EQUIPMENT

VENTILATION:	USE GENERAL OR LOCAL EXHAUST VENTILATION TO MEET TLV REQUIREMENTS.
RESPIRATORY PROTECTION:	RESPIRATORY PROTECTION REQUIRED IF AIRBORNE CONCENTRATION EXCEEDS TLV. AT CONCENTRATIONS ABOVE 10 PPM, A SELF-CONTAINED BREATHING APPARATUS IS ADVISED.
EYE/SKIN PROTECTION:	SAFETY GOGGLES AND FACE SHIELD, UNIFORM, PROTECTIVE SUIT, POLYVINYL ALCOHOL GLOVES ARE RECOMMENDED.

9 - STORAGE AND HANDLING PRECAUTIONS

SAF-T-DATA(TM) STORAGE COLOR CODE: RED STRIPE (STORE SEPARATELY)

SPECIAL PRECAUTIONS
BOND AND GROUND CONTAINERS WHEN TRANSFERRING LIQUID. KEEP CONTAINER TIGHTLY CLOSED. STORE IN A COOL, DRY, WELL-VENTILATED, FLAMMABLE LIQUID STORAGE AREA.

10 - TRANSPORTATION DATA AND ADDITIONAL INFORMATION

DOMESTIC (D.O.T.)

PROPER SHIPPING NAME	BENZENE (BENZOL)
HAZARD CLASS	FLAMMABLE LIQUID
UN/NA	UN1114
LABELS	FLAMMABLE LIQUID
REPORTABLE QUANTITY	1000 LBS.

INTERNATIONAL (I.M.O.)

PROPER SHIPPING NAME	BENZENE
HAZARD CLASS	3.2
UN/NA	UN1114
LABELS	FLAMMABLE LIQUID

1 - PRODUCT IDENTIFICATION

PRODUCT NAME: CHLOROFORM
FORMULA: CHCL3
FORMULA WT: 119.38
CAS NO.: 67-66-3
NIOSH/RTECS NO.: FS9100000
COMMON SYNONYMS: TRICHLOROMETHANE; METHYL TRICHLORIDE
PRODUCT CODES: 9175,9182,E910,9183,9174,9181,9257,9186,9180
EFFECTIVE: 01/22/87
REVISION #03

PRECAUTIONARY LABELLING

BAKER SAF-T-DATA(TM) SYSTEM

HEALTH	-	3	SEVERE (CANCER CAUSING)
FLAMMABILITY	-	0	NONE
REACTIVITY	-	1	SLIGHT
CONTACT	-	2	MODERATE

HAZARD RATINGS ARE 0 TO 4 (0 = NO HAZARD; 4 = EXTREME HAZARD).

LABORATORY PROTECTIVE EQUIPMENT

GOGGLES & SHIELD; LAB COAT & APRON; VENT HOOD; PROPER GLOVES

PRECAUTIONARY LABEL STATEMENTS

POISON DANGER
MAY BE FATAL IF SWALLOWED OR INHALED
EXCEPTIONAL HEALTH HAZARD - READ MATERIAL SAFETY DATA SHEET
NOTE: REPORTED AS CAUSING CANCER IN LABORATORY ANIMALS. EXERCISE DUE CARE.
AVOID CONTACT WITH EYES, SKIN, CLOTHING.
DO NOT BREATHE VAPOR. KEEP IN TIGHTLY CLOSED CONTAINER. USE WITH ADEQUATE VENTILATION. WASH THOROUGHLY AFTER HANDLING.

SAF-T-DATA(TM) STORAGE COLOR CODE: BLUE (HEALTH)

2 - HAZARDOUS COMPONENTS

COMPONENT	%	CAS NO.
CHLOROFORM	90-100	67-66-3

3 - PHYSICAL DATA

BOILING POINT: 61 C (142 F)
MELTING POINT: -64 C (-83 F)
VAPOR PRESSURE(MM HG): 159
VAPOR DENSITY(AIR=1): 4.1

SPECIFIC GRAVITY: 1.48 (H2O=1)
EVAPORATION RATE: 0.09 (BUTYL ACETATE=1)

SOLUBILITY(H2O): SLIGHT (0.1 TO 1 %) % VOLATILES BY VOLUME: 100

APPEARANCE & ODOR: CLEAR, COLORLESS LIQUID WITH PLEASANT, SWEET ODOR.

---

4 - FIRE AND EXPLOSION HAZARD DATA

FLASH POINT (CLOSED CUP: N/A NFPA 704M RATING: 2-0-0

FLAMMABLE LIMITS: UPPER - N/A % LOWER - N/A %

FIRE EXTINGUISHING MEDIA
USE EXTINGUISHING MEDIA APPROPRIATE FOR SURROUNDING FIRE.

SPECIAL FIRE-FIGHTING PROCEDURES
FIREFIGHTERS SHOULD WEAR PROPER PROTECTIVE EQUIPMENT AND SELF-CONTAINED BREATHING APPARATUS WITH FULL FACEPIECE OPERATED IN POSITIVE PRESSURE MODE. MOVE CONTAINERS FROM FIRE AREA IF IT CAN BE DONE WITHOUT RISK. USE WATER TO KEEP FIRE-EXPOSED CONTAINERS COOL.

TOXIC GASES PRODUCED
HYDROGEN CHLORIDE, CHLORINE, PHOSGENE

---

5 - HEALTH HAZARD DATA

PEL LISTED DENOTES CEILING LIMIT.

THRESHOLD LIMIT VALUE (TLV/TWA): 50 MG/M3 (10 PPM)

PERMISSIBLE EXPOSURE LIMIT (PEL): 240 MG/M3 (50 PPM)

TOXICITY:	LD50 (ORAL-RAT)(MG/KG)	-	1194
	LD50 (SCU-MOUSE)(MG/KG)	-	704
	LC50 (INHAL-MOUSE) (G/M3)	-	28
	LD50 (IPR-MOUSE)(G/KG)	-	1

CARCINOGENICITY: NTP: YES IARC: YES Z LIST: NO OSHA REG: NO

EFFECTS OF OVEREXPOSURE
INHALATION AND INGESTION ARE HARMFUL AND MAY BE FATAL.
INHALATION OF VAPORS MAY CAUSE HEADACHE, NAUSEA, VOMITING, DIZZINESS, DROWSINESS, IRRITATION OF RESPIRATORY TRACT, AND LOSS OF CONSCIOUSNESS.
LIQUID MAY BE IRRITATING TO SKIN AND EYES. PROLONGED SKIN CONTACT MAY RESULT IN DERMATITIS. EYE CONTACT MAY RESULT IN TEMPORARY CORNEAL DAMAGE.
LIQUID IS READILY ABSORBED THROUGH THE SKIN. CONTACT WITH SKIN HAS A DEFATTING EFFECT, CAUSING DRYING AND IRRITATION. OVER EXPOSURE TO VAPORS MAY CAUSE IRRITATION OF MUCOUS MEMBRANES, DRYNESS OF MOUTH AND THROAT, HEADACHE, NAUSEA AND DIZZINESS.
INGESTION MAY CAUSE NAUSEA, VOMITING, GASTROINTESTINAL IRRITATION, AND BURNS TO MOUTH AND THROAT.
CHRONIC EFFECTS OF OVEREXPOSURE MAY INCLUDE KIDNEY AND/OR LIVER DAMAGE.

TARGET ORGANS
LIVER, KIDNEYS, HEART, EYES, SKIN

MEDICAL CONDITIONS GENERALLY AGGRAVATED BY EXPOSURE
KIDNEY DISORDERS, LIVER DISORDERS, HEART DISORDERS, SKIN DISORDERS

ROUTES OF ENTRY
INHALATION, INGESTION, SKIN CONTACT, EYE CONTACT

EMERGENCY AND FIRST AID PROCEDURES
CALL A PHYSICIAN.
IF SWALLOWED, IF CONSCIOUS, IMMEDIATELY INDUCE VOMITING.
IF INHALED, REMOVE TO FRESH AIR. IF NOT BREATHING, GIVE ARTIFICIAL RESPIRATION. IF BREATHING IS DIFFICULT, GIVE OXYGEN.
IN CASE OF CONTACT, IMMEDIATELY FLUSH EYES WITH PLENTY OF WATER FOR AT LEAST 15 MINUTES. FLUSH SKIN WITH WATER.

THIS SUBSTANCE IS LISTED AS ACGIH ANTICIPATED HUMAN CARCINOGEN, NTP ANTICIPATED HUMAN CARCINOGEN, AND IARC PROBABLE HUMAN CARCINOGEN (GROUPS 2A & 2B).

---

6 - REACTIVITY DATA

STABILITY: STABLE HAZARDOUS POLYMERIZATION: WILL NOT OCCUR

CONDITIONS TO AVOID: HEAT, FLAME, OTHER SOURCES OF IGNITION, LIGHT, AIR, MOISTURE

INCOMPATIBLES: STRONG BASES, ALKALI METALS, ALUMINUM, MAGNESIUM, STRONG OXIDIZING AGENTS

DECOMPOSITION PRODUCTS: CHLORINE, HYDROGEN CHLORIDE, PHOSGENE

---

7 - SPILL AND DISPOSAL PROCEDURES

STEPS TO BE TAKEN IN THE EVENT OF A SPILL OR DISCHARGE
WEAR SELF-CONTAINED BREATHING APPARATUS AND FULL PROTECTIVE CLOTHING.
STOP LEAK IF YOU CAN DO SO WITHOUT RISK. USE WATER SPRAY TO REDUCE VAPORS.
TAKE UP WITH SAND OR OTHER NON-COMBUSTIBLE ABSORBENT MATERIAL AND PLACE INTO CONTAINER FOR LATER DISPOSAL. FLUSH SPILL AREA WITH WATER.

J. T. BAKER SOLUSORB(R) SOLVENT ADSORBENT IS RECOMMENDED FOR SPILLS OF THIS PRODUCT.

DISPOSAL PROCEDURE
DISPOSE IN ACCORDANCE WITH ALL APPLICABLE FEDERAL, STATE, AND LOCAL ENVIRONMENTAL REGULATIONS.

EPA HAZARDOUS WASTE NUMBER: U044 (TOXIC WASTE)

---

8 - PROTECTIVE EQUIPMENT

VENTILATION: USE GENERAL OR LOCAL EXHAUST VENTILATION TO MEET TLV REQUIREMENTS.

RESPIRATORY PROTECTION: RESPIRATORY PROTECTION REQUIRED IF AIRBORNE CONCENTRATION EXCEEDS TLV. AT CONCENTRATIONS ABOVE 10 PPM, A SELF-CONTAINED BREATHING APPARATUS IS ADVISED.

EYE/SKIN PROTECTION: SAFETY GOGGLES AND FACE SHIELD, UNIFORM, PROTECTIVE SUIT, POLYVINYL ALCOHOL GLOVES ARE RECOMMENDED.

---

9 - STORAGE AND HANDLING PRECAUTIONS

SAF-T-DATA(TM) STORAGE COLOR CODE: BLUE (HEALTH)

SPECIAL PRECAUTIONS
KEEP CONTAINER TIGHTLY CLOSED. STORE IN SECURE POISON AREA.

---

10 - TRANSPORTATION DATA AND ADDITIONAL INFORMATION

DOMESTIC (D.O.T.)

PROPER SHIPPING NAME	CHLOROFORM (AIR AND WATER ONLY)
HAZARD CLASS	ORM-A
UN/NA	UN1888
LABELS	NONE
REPORTABLE QUANTITY	5000 LBS.

INTERNATIONAL (I.M.O.)

PROPER SHIPPING NAME	CHLOROFORM
HAZARD CLASS	6.1
UN/NA	UN1888
LABELS	POISON

1 - PRODUCT IDENTIFICATION

PRODUCT NAME: 1,2-DICHLOROETHANE
FORMULA: CLCH2CH2CL
FORMULA WT: 98.96
CAS NO.: 107-06-2
NIOSH/RTECS NO.: KL0525000
COMMON SYNONYMS: ETHYLENE DICHLORIDE; 1,2-BICHLOROETHANE; ETHYLENE CHLORIDE
PRODUCT CODES: H076,9302
EFFECTIVE: 01/22/87
REVISION #04

PRECAUTIONARY LABELLING

BAKER SAF-T-DATA(TM) SYSTEM

HEALTH	-	3	SEVERE (CANCER CAUSING)
FLAMMABILITY	-	3	SEVERE (FLAMMABLE)
REACTIVITY	-	1	SLIGHT
CONTACT	-	2	MODERATE

HAZARD RATINGS ARE 0 TO 4 (0 = NO HAZARD; 4 = EXTREME HAZARD).

LABORATORY PROTECTIVE EQUIPMENT

GOGGLES & SHIELD; LAB COAT & APRON; VENT HOOD; PROPER GLOVES; CLASS B EXTINGUISHER

PRECAUTIONARY LABEL STATEMENTS

WARNING
FLAMMABLE
CAUSES IRRITATION
HARMFUL IF SWALLOWED OR INHALED

NOTE: REPORTED AS CAUSING CANCER IN LABORATORY ANIMALS. EXERCISE DUE CARE. KEEP AWAY FROM HEAT, SPARKS, FLAME. AVOID CONTACT WITH EYES, SKIN, CLOTHING. AVOID BREATHING VAPOR. KEEP IN TIGHTLY CLOSED CONTAINER. USE WITH ADEQUATE VENTILATION. WASH THOROUGHLY AFTER HANDLING. IN CASE OF FIRE, USE ALCOHOL FOAM, DRY CHEMICAL, CARBON DIOXIDE - WATER MAY BE INEFFECTIVE. FLUSH SPILL AREA WITH WATER SPRAY.

SAF-T-DATA(TM) STORAGE COLOR CODE: RED (FLAMMABLE)

2 - HAZARDOUS COMPONENTS

COMPONENT	%	CAS NO.
1,2-DICHLOROETHANE	90-100	107-06-2

3 - PHYSICAL DATA

BOILING POINT: 84 C (183 F) VAPOR PRESSURE(MM HG): 62

MELTING POINT: -36 C (-33 F) VAPOR DENSITY(AIR=1): 3.4

SPECIFIC GRAVITY: 1.25 (H2O=1) EVAPORATION RATE: 6.5 (BUTYL ACETATE=1)

SOLUBILITY(H2O): SLIGHT (0.1 TO 1 %) % VOLATILES BY VOLUME: 100

APPEARANCE & ODOR: CLEAR LIQUID WITH SWEET ODOR LIKE CHLOROFORM.

---

4 - FIRE AND EXPLOSION HAZARD DATA

FLASH POINT (CLOSED CUP 13 C (56 F) NFPA 704M RATING: 2-3-0

FLAMMABLE LIMITS: UPPER - 15.9 % LOWER - 6.2 %

FIRE EXTINGUISHING MEDIA
USE ALCOHOL FOAM, DRY CHEMICAL OR CARBON DIOXIDE.
(WATER MAY BE INEFFECTIVE.)

SPECIAL FIRE-FIGHTING PROCEDURES
FIREFIGHTERS SHOULD WEAR PROPER PROTECTIVE EQUIPMENT AND SELF-CONTAINED BREATHING APPARATUS WITH FULL FACEPIECE OPERATED IN POSITIVE PRESSURE MODE. MOVE CONTAINERS FROM FIRE AREA IF IT CAN BE DONE WITHOUT RISK. USE WATER TO KEEP FIRE-EXPOSED CONTAINERS COOL.

UNUSUAL FIRE & EXPLOSION HAZARDS
VAPORS MAY FLOW ALONG SURFACES TO DISTANT IGNITION SOURCES AND FLASH BACK. CLOSED CONTAINERS EXPOSED TO HEAT MAY EXPLODE. CONTACT WITH STRONG OXIDIZERS MAY CAUSE FIRE.

TOXIC GASES PRODUCED
HYDROGEN CHLORIDE, PHOSGENE, CARBON MONOXIDE, CARBON DIOXIDE

---

5 - HEALTH HAZARD DATA

THIS SUBSTANCE IS LISTED AS AN NTP ANTICIPATED HUMAN CARCINOGEN, IARC ANIMAL CARCINOGEN. ACCEPTABLE MAXIMUM PEAK ABOVE THE ACCEPTANCE CEILING CONCENTRATION FOR AN EIGHT-HOUR SHIFT = 200 PPM FOR 5 MINUTES IN ANY 3 HOURS. (PEL) CEILING = 100 PPM.

THRESHOLD LIMIT VALUE (TLV/TWA): 40 MG/M3 (10 PPM)

SHORT-TERM EXPOSURE LIMIT (STEL): 60 MG/M3 (15 PPM)

PERMISSIBLE EXPOSURE LIMIT (PEL): MG/M3 (50 PPM)

TOXICITY: LD50 (ORAL-RAT)(MG/KG) - 670

CARCINOGENICITY: NTP: YES IARC: NO Z LIST: NO OSHA REG: NO

EFFECTS OF OVEREXPOSURE
INHALATION AND INGESTION ARE HARMFUL AND MAY BE FATAL.
INHALATION MAY CAUSE HEADACHE, NAUSEA, VOMITING, DIZZINESS, NARCOSIS, SUFFOCATION, LOWER BLOOD PRESSURE, CENTRAL NERVOUS SYSTEM DEPRESSION.
INHALATION OF VAPORS MAY CAUSE PULMONARY EDEMA.
CONTACT WITH SKIN OR EYES MAY CAUSE SEVERE IRRITATION OR BURNS. PROLONGED CONTACT MAY CAUSE SKIN SENSITIZATION. SUBSTANCE IS READILY ABSORBED

THROUGH THE SKIN.
INGESTION MAY CAUSE NAUSEA, VOMITING, HEADACHES, DIZZINESS, GASTROINTESTINAL IRRITATION.
CHRONIC EFFECTS OF OVEREXPOSURE MAY INCLUDE DAMAGE TO KIDNEYS, LIVER, LUNGS, BLOOD, OR CENTRAL NERVOUS SYSTEM.

TARGET ORGANS
KIDNEYS, LIVER, EYES, SKIN, CENTRAL NERVOUS SYSTEM

MEDICAL CONDITIONS GENERALLY AGGRAVATED BY EXPOSURE
BRONCHITIS, KIDNEY, LIVER, OR BLOOD DISORDERS, HEART DISORDERS, ASTHMA, CIRCULATOY DISORDERS

ROUTES OF ENTRY
INGESTION, INHALATION, ABSORPTION, EYE CONTACT, SKIN CONTACT

EMERGENCY AND FIRST AID PROCEDURES
CALL A PHYSICIAN.
IF SWALLOWED, DO NOT INDUCE VOMITING.
IF INHALED, REMOVE TO FRESH AIR. IF NOT BREATHING, GIVE ARTIFICIAL RESPIRATION. IF BREATHING IS DIFFICULT, GIVE OXYGEN.
IN CASE OF CONTACT, IMMEDIATELY FLUSH EYES WITH PLENTY OF WATER FOR AT LEAST 15 MINUTES. FLUSH SKIN WITH WATER.

6 - REACTIVITY DATA

STABILITY: STABLE HAZARDOUS POLYMERIZATION: WILL NOT OCCUR

CONDITIONS TO AVOID: HEAT, FLAME, OTHER SOURCES OF IGNITION

INCOMPATIBLES: STRONG OXIDIZING AGENTS, ALUMINUM, MAGNESIUM, AMMONIA, STRONG BASES, NITRIC ACID, POTASSIUM METAL

DECOMPOSITION PRODUCTS: HYDROGEN CHLORIDE, PHOSGENE, CARBON MONOXIDE, CARBON DIOXIDE

7 - SPILL AND DISPOSAL PROCEDURES

STEPS TO BE TAKEN IN THE EVENT OF A SPILL OR DISCHARGE
WEAR SELF-CONTAINED BREATHING APPARATUS AND FULL PROTECTIVE CLOTHING.
SHUT OFF IGNITION SOURCES; NO FLARES, SMOKING OR FLAMES IN AREA. STOP LEAK IF YOU CAN DO SO WITHOUT RISK. USE WATER SPRAY TO REDUCE VAPORS. TAKE UP WITH SAND OR OTHER NON-COMBUSTIBLE ABSORBENT MATERIAL AND PLACE INTO

CONTAINER FOR LATER DISPOSAL. FLUSH AREA WITH WATER.

J. T. BAKER SOLUSORB(R) SOLVENT ADSORBENT IS RECOMMENDED FOR SPILLS OF THIS PRODUCT.

DISPOSAL PROCEDURE
DISPOSE IN ACCORDANCE WITH ALL APPLICABLE FEDERAL, STATE, AND LOCAL ENVIRONMENTAL REGULATIONS.

EPA HAZARDOUS WASTE NUMBER: D001 (IGNITABLE WASTE)

8 - PROTECTIVE EQUIPMENT

VENTILATION:	USE GENERAL OR LOCAL EXHAUST VENTILATION TO MEET TLV REQUIREMENTS.
RESPIRATORY PROTECTION:	RESPIRATORY PROTECTION REQUIRED IF AIRBORNE CONCENTRATION EXCEEDS TLV. AT CONCENTRATIONS ABOVE 10 PPM, A SELF-CONTAINED BREATHING APPARATUS IS ADVISED.
EYE/SKIN PROTECTION:	SAFETY GOGGLES AND FACE SHIELD, UNIFORM, PROTECTIVE SUIT, NEOPRENE GLOVES ARE RECOMMENDED.

9 - STORAGE AND HANDLING PRECAUTIONS

SAF-T-DATA(TM) STORAGE COLOR CODE: RED (FLAMMABLE)

SPECIAL PRECAUTIONS
BOND AND GROUND CONTAINERS WHEN TRANSFERRING LIQUID. KEEP CONTAINER TIGHTLY CLOSED. STORE IN A COOL, DRY, WELL-VENTILATED, FLAMMABLE LIQUID STORAGE AREA.

10 - TRANSPORTATION DATA AND ADDITIONAL INFORMATION

DOMESTIC (D.O.T.)

PROPER SHIPPING NAME	ETHYLENE DICHLORIDE
HAZARD CLASS	FLAMMABLE LIQUID
UN/NA	UN1184
LABELS	FLAMMABLE LIQUID
REPORTABLE QUANTITY	5000 LBS.

INTERNATIONAL (I.M.O.)

PROPER SHIPPING NAME	ETHYLENE DICHLORIDE
HAZARD CLASS	3.2, 6.1
UN/NA	UN1184
LABELS	FLAMMABLE LIQUID, POISON

CHEM SERVICE -- 1,2-DICHLOROPROPANE, O-638
MATERIAL SAFETY DATA SHEET
NSN: 681000N067785
Manufacturer's CAGE: 8Y898
Part No. Indicator: A
Part Number/Trade Name: 1,2-DICHLOROPROPANE, O-638

General Information

Company's Name: CHEM SERVICE INC
Company's P. O. Box: 3108
Company's City: WEST CHESTER
Company's State: PA
Company's Country: US
Company's Zip Code: 19381
Company's Emerg Ph #: 215-692-3026
Company's Info Ph #: 215-692-3026
Record No. For Safety Entry: 001
Tot Safety Entries This Stk#: 001
Status: SMJ
Date MSDS Prepared: 01SEP88
Safety Data Review Date: 08FEB96
MSDS Serial Number: CBGLZ

Ingredients/Identity Information

Proprietary: NO
Ingredient: PROPANE, 1,2-DICHLORO-; (1,2-DICHLOROPROPANE) (SARA 313) (CERCLA)
Ingredient Sequence Number: 01
NIOSH (RTECS) Number: TX9625000
CAS Number: 78-87-5
OSHA PEL: 75 PPM
ACGIH TLV: 75 PPM; 110 STEL

Physical/Chemical Characteristics

Appearance And Odor: COLORLESS LIQUID; ETHER LIKE ODOR.
Boiling Point: 205F,96C
Melting Point: -148F,-100C
Vapor Pressure (MM Hg/70 F): 40 @ 20C
Specific Gravity: 1.156
Solubility In Water: INSOL (IMMISCIBLE)

Fire and Explosion Hazard Data

Flash Point: 39.2F,4.0C
Lower Explosive Limit: 3.4%
Upper Explosive Limit: 14.5%
Extinguishing Media: CARBON DIOXIDE, DRY CHEMICAL POWDER OR WATER SPRAY.
Special Fire Fighting Proc: USE NIOSH/MSHA APPROVED SCBA AND FULL PROTECTIVE EQUIPMENT (FP N).
Unusual Fire And Expl Hazrds: THIS IS A FLAMMABLE CHEMICAL.

Reactivity Data

Stability: YES
Cond To Avoid (Stability): FLAMMABLE. DO NOT USE MAGNESIUM/ALUMINUM OR THEIR ALLOYS AS CONTAINERS.
Materials To Avoid: INCOMPATIBLE WITH STRONG BASES. INCOMPATIBLE WITH STRONG OXIDIZING AGENTS. INCOMPATIBLE WITH STRONG ACIDS.
Hazardous Decomp Products: DECOMPOSITION LIBERATES TOXIC FUMES. DECOMPOSITION PRODUCTS ARE CORROSIVE.
Hazardous Poly Occur: NO
Conditions To Avoid (Poly): NOT RELEVANT

==========

Health Hazard Data

==========

LD50-LC50 Mixture: LD50: (RAT) 2196 MG/KG
Route Of Entry - Inhalation: YES
Route Of Entry - Skin: YES
Route Of Entry - Ingestion: YES
Health Haz Acute And Chronic: ALL CHEMICALS SHOULD BE CONSIDERED HAZARDOUS - AVOID DIRECT PHYSICAL CONTACT! CAN BE HARMFUL IF ABSORBED THROUGH THE SKIN. CAN BE HARMFUL IF INHALED. CAN CAUSE SKIN IRRITATION. CAN BE IRRITATING TO MUCOUS MEMBRANES. SUSPECTED CARCINOGEN-MAY PRODUCE CANCER. CAN CAUSE EYE IRRITATION. CAN BE HARMFUL IF (EFTS OF OVEREXP)
Carcinogenicity - NTP: NO
Carcinogenicity - IARC: NO
Carcinogenicity - OSHA: NO
Explanation Carcinogenicity: NOT RELEVANT
Signs/Symptoms Of Overexp: HLTH HAZ: SWALLOWED. PROLONGED EXPOSURE MAY CAUSE NAUSEA/HEADACHE/DIZZINESS AND/OR EYE DAMAGE. CAN CAUSE NERVOUS SYSTEM INJURY. CAN CAUSE LIVER INJURY. CAN CAUSE KIDNEY INJURY. CAN CAUSE AN ALLERGIC SKIN REACTION. CAN BE IRRITATING TO MUCOUS MEMBRANES.
Med Cond Aggravated By Exp: NONE SPECIFIED BY MANUFACTURER.
Emergency/First Aid Proc: ANTIDOTE IS SUBSTANCE INTENDED TO COUNTERACT EFT OF POISON. IT SHOULD BE ADMIN ONLY BY MD/TRAINED EMER PERS. MED ADVICE CAN BE OBTAINED FROM POIS CTL CTR. EYES:FLUSH CONTINUOUSLY W/WATER FOR AT LEAST 15-20 MIN. SKIN: FLUSH W/WATER FOR 15-20 MIN. IF NO BURNS HAVE OCCURRED-USE SOAP & WATER TO CLEANSE SKIN. INHAL: REMOVE TO FRESH AIR. ADMIN OXYGEN IF HAVING DFCLTY BRTHG. IF BRTHG HAS STOPPED (SUPDAT)

==========

Precautions for Safe Handling and Use

==========

Steps If Matl Released/Spill: EVACUATE AREA. WEAR APPROPRIATE OSHA-REGULATED EQUIPMENT. VENTILATE AREA. ABSORB ON VERMICULITE OR SIMILAR MATERIAL. SWEEP UP AND PLACE IN AN APPROPRIATE CONTAINER. HOLD FOR DISPOSAL. WASH CONTAMINATED SURFACES TO REMOVE ANY RESIDUES.
Neutralizing Agent: NONE SPECIFIED BY MANUFACTURER.
Waste Disposal Method: DISPOSAL MUST BE IN ACCORDANCE WITH FEDERAL, STATE AND LOCAL REGULATIONS (FP N). BURN IN A CHEMICAL INCINERATOR EQUIPPED WITH AN AFTERBURNER AND SCRUBBER.
Precautions-Handling/Storing: AVOID CONTACT WITH SKIN, EYES AND CLOTHING. KEEP TIGHTLY CLOSED AND STORE IN A COOL, DRY PLACE. STORE ONLY WITH COMPATIBLE CHEMICALS.
Other Precautions: PERSONS NOT SPECIFICALLY & PROPERLY TRAINED SHOULD NOT HANDLE THIS CHEM OR ITS CNTNR. THIS PROD IS FURNISHED FOR LAB USE ONLY! PRODS MAY NOT BE USED AS DRUGS, COSMETICS, AGRICULTURAL/PESTICIDAL PRODS, FOOD ADDITIVES OR AS HOUSEHOLD CHEMS.

==========

Control Measures

==========

Respiratory Protection: USE NIOSH/MSHA APPROVED RESPIRATOR APPROPRIATE FOR EXPOSURE OF CONCERN (FP N).
Ventilation: THIS CHEMICAL SHOULD BE HANDLED ONLY IN A HOOD.
Protective Gloves: IMPERVIOUS GLOVES (FP N).
Eye Protection: ANSI APPRVD CHEM WORKERS GOGGLES (FP N).
Other Protective Equipment: ANSI APPROVED EYE WASH & DELUGE SHOWER (FP N). USE APPROPRIATE OSHA/MSHA APPROVED SAFETY EQUIPMENT.
Work Hygienic Practices: CONTACT LENSES SHOULD NOT BE WORN IN THE LABORATORY.
Suppl. Safety & Health Data: FIRST AID PROC: ADMIN ARTF RESP. IF IN CARD ARREST ADMIN CPR. CONTINUE LIFE SUPPORTING MEASURES UNTIL MED ASSISTANCE HAS ARRIVED.

==========

Transportation Data

==========

==========

Disposal Data

==========
==========
Label Data
==========

Label Required: YES
Technical Review Date: 08FEB96
Label Date: 27DEC95
Label Status: G
Common Name: 1,2-DICHLOROPROPANE, O-638
Chronic Hazard: YES
Signal Word: DANGER!
Acute Health Hazard-Moderate: X
Contact Hazard-Slight: X
Fire Hazard-Severe: X
Reactivity Hazard-None: X
Special Hazard Precautions: EXTREMELY FLAMMABLE. ACUTE: CAN BE HARMFUL IF ABSORBED THROUGH THE SKIN, IF INHALED OR IF SWALLOWED. CAN CAUSE SKIN AND EYE IRRITATION. CAN BE IRRITATING TO MUCOUS MEMBRANES. PROLONGED EXPOSURE MAY CAUSE NAUSEA/HEADACHE/DIZZINESS AND/OR EYE DAMAGE. CAN CAUSE NERVOUS SYSTEM INJURY, LIVER OR KIDNEY INJURY. CAN CAUSE AN ALLERGIC SKIN REACTION. CHRONIC: SUSPECTED CARCINOGEN-MAY PRODUCE CANCER (MFR).
Protect Eye: Y
Protect Skin: Y
Protect Respiratory: Y
Label Name: CHEM SERVICE INC
Label P.O. Box: 3108
Label City: WEST CHESTER
Label State: PA
Label Zip Code: 19381
Label Country: US
Label Emergency Number: 215-692-3026

Genium Publishing Corporation
One Genium Plaza
Schenectady, NY 12304-4690 USA
(518) 377-8854

Material Safety Data Sheets Collection:

Sheet No. 385
Ethylbenzene

Issued: 8/78 Revision: B, 9/92

Section 1. Material Identification

Ethylbenzene ($C_6H_5C_2H_5$) Description: Derived by heating benzene and ethylene in presence of aluminum chloride with subsequent distillation, by fractionation directly from the mixed xylene stream in petroleum refining, or dehydrogenation of naphthenes. Used as a solvent, an antiknock agent in gasoline; and as an intermediate in production of synthetic rubber, styrene, cellulose acetate, diethylbenzene, acetophenone, ethyl anthraquinone, propyl oxide, and α-methylbenzol alcohol.
Other Designations: CAS No. 100-41-4, ethylbenzol, EB, phenylethane, NCI-C56393.
Manufacturer: Contact your supplier or distributor. Consult latest *Chemical Week Buyers' Guide*[73] for a suppliers list.

R 1
I 3
S 2*
K 4
* Skin absorption

NFPA
3
2 0
-

HMIS
H 2†
F 3
R 0
PPE - Sec. 8
† Chronic effects

Cautions: Ethylbenzene is a skin and mucous membrane irritant considered the most irritating of the benzene series. Inhalation causes acute and chronic central nervous system (CNS) effects. It is highly flammable and forms explosive mixtures with air.

Section 2. Ingredients and Occupational Exposure Limits

Ethylbenzene, ca >99.0%. Impurities include ~ 0.1% *meta & para* xylene, ~ 0.1% cumene, and ~ 0.1% toluene.

1991 OSHA PELs
8-hr TWA: 100 ppm (435 mg/m^3)
15-min STEL: 125 ppm (545 mg/m^3)
Action Level: 50 ppm (217 mg/m^3)

1990 IDLH Level
2000 ppm

1990 NIOSH REL
TWA: 100 ppm (435 mg/m^3)
STEL: 125 ppm (545 mg/m^3)

1992-93 ACGIH TLVs
TWA: 100 ppm (434 mg/m^3)
STEL: 125 ppm (545 mg/m^3)

1990 DFG (Germany) MAK
TWA: 100 ppm (440 mg/m^3)
Category 1: local irritants
Peak Exposure Limit: 200 ppm, 5 min momentary value, max of 8/shift
Danger of cutaneous absorption

1985-86 Toxicity Data*
Human, inhalation, TC_{Lo}: 100 ppm/8 hr caused eye effects, sleep, and respiratory changes.
Human, lymphocyte: 1 mmol/L induced sister chromatid exchange.
Rat, oral, LD_{50}: 3500 mg/kg; toxic effects not yet reviewed
Rat (female), inhalation, TC_{Lo}: 1000 ppm/7 hr/day, 5 days/wk, for 3 wk prior to mating and daily for 19 days of gestation produced pups with high incidence of extra ribs.[179]

* See NIOSH, *RTECS* (DA0700000), for additional irritation, mutation, reproductive, and toxicity data.

Section 3. Physical Data

Boiling Point: 277 °F (136 °C)
Melting Point: -139 °F (-95 °C)
Surface Tension: 31.5 dyne/cm
Ionization Potential: 8.76 eV
Viscosity: 0.64 cP at 77 °F (25 °C)
Refraction Index: 1.4959 at 68 °F (20 °C)
Relative Evaporation Rate (ether = 1): 0.0106
Bulk Density: 7.21 lb/Gal at 77 °F (25 °C)
Critical Temperature: 651 °F (343.9 °C)
Critical Pressure: 35.6 atm

Molecular Weight: 106.16
Density: 0.863 at 77 °F (25 °C)
Water Solubility: Slightly, 14 mg/100 mL at 59 °F (15 °C)
Other Solubilities: Miscible in alcohol, ether; soluble in carbon tetrachloride, benzene, sulfur dioxide, and many organic solvents; insoluble in ammonia
Odor Threshold: 2.3 ppm
Vapor Pressure: 7.1 mm Hg at 68 °F (20 °C); 10 mmHg at 78.62 °F (25.9 °C); 100 mm Hg 165.38 °F (74.1 °C)
Saturated Vapor Density (Air = 0.075 lb/ft^3 or 1.2 kg/m^3): 0.0768 lb/ft^3 or 1.2298 kg/m^3

Appearance and Odor: Colorless, flammable liquid with a pungent odor.

Section 4. Fire and Explosion Data

Flash Point: 64 °F (18 °C) CC	Autoignition Temperature: 810 °F (432 °C)	LEL: 1.0% v/v	UEL: 6.7% v/v

Extinguishing Media: Class 1B Flammable liquid. For small fires, use dry chemical, carbon dioxide, or 'alcohol-resistant' foam. For large fires, use fog or 'alcohol-resistant' foam. Use water only if other agents are unavailable; EB floats on water and may travel to an ignition source and spread fire. **Unusual Fire or Explosion Hazards:** Burning rate = 5.8 mm/min. Vapors may travel to an ignition source and flash back. Container may explode in heat of fire. EB poses a vapor explosion hazard indoors, outdoors, and in sewers. **Special Fire-fighting Procedures:** Because fire may produce toxic thermal decomposition products, wear a self-contained breathing apparatus (SCBA) with a full facepiece operated in pressure-demand or positive-pressure mode. Cool container sides with water until well after fire is out. Stay away from ends of tanks. For massive fire in cargo area, use monitor nozzles or unmanned hose holders; if impossible, withdraw from area and let fire burn. Withdraw immediately if you hear rising sound from venting safety device or notice any tank discoloration due to fire. Do not release runoff from fire control methods to sewers or waterways.

Section 5. Reactivity Data

Stability/Polymerization: Ethylbenzene is stable at room temperature in closed containers under normal storage and handling conditions. Hazardous polymerization cannot occur.
Chemical Incompatibilities: Reacts vigorously with oxidizers.
Conditions to Avoid: Exposure to heat and oxidizers.
Hazardous Products of Decomposition: Thermal oxidative decomposition of EB can produce acrid smoke and irritating fumes.

Section 6. Health Hazard Data

Carcinogenicity: The IARC,[164] NTP,[169] and OSHA[164] do not list EB as a carcinogen. **Summary of Risks:** Occupational exposure to EB alone is rare since it is usually present together with other solvents. EB is irritating to the eyes, skin, and respiratory tract. Vapor inhalation produces varying degrees of CNS effects depending on concentration. The liquid is absorbed through the skin but vapors are not. 56 to 64% of inhaled ethylbenzene is retained and metabolized. Urinary metabolites following exposure to 23 to 85 ppm for 8 hr are mandelic acid (64%), phenylglyoxylic acid (25%), and methylphenylcarbinol/1-phenyl ethanol (5%). Concurrent exposure to xylene and ethylbenzene causes slower excretion of EB metabolites. Based on the rat LD_{50}, one manufacturer gives 3 to 4 oz. as the lethal dose for a 100 lb person.

Continue on next page

Section 6. Health Hazard Data

Medical Conditions Aggravated by Long-Term Exposure: Skin and CNS diseases and impaired pulmonary function (especially obstructive ai[illegible] disease). **Target Organs:** Eyes, respiratory system, skin, CNS, blood. **Primary Entry Routes:** Inhalation, skin and eye contact. **Acute E[illegible]:** Vapor inhalation of 200 ppm caused transient eye irritation; 1000 ppm caused eye irritation with profuse watering (tolerance developed r[illegible]v); 2000 ppm caused severe and immediate eye irritation and watering, nasal irritation, chest constriction, and vertigo; 5000 ppm was i[illegible]able and caused eye and nose irritation. Inhalation of high concentrations may cause narcosis, cramps, and death due to respiratory paralysis. Skin exposed to pure ethylbenzene for 10 to 15 min absorbed 22 to 33 mg/cm^2/hr. Immersion of hand in solutions of 112 & 156 mg/L for 1 hr absorbed 118 & 215.7 µg/cm^2/hr, respectively. **Chronic Effects:** Repeated skin contact may cause dryness, scaling, and fissuring. Workers chronically exposed to > 100 ppm complained of fatigue, sleepiness, headache, and mild irritation of the eyes and respiratory tract. Repeated vapor inhalation may result in blood disorders, particularly leukopenia (abnormally low level of white blood cells) and lymphocytosis.

FIRST AID

Eyes: *Do not* allow victim to rub or keep eyes tightly shut. Gently lift eyelids and flush immediately and continuously with flooding amounts of water until transported to an emergency medical facility. Consult a physician immediately. **Skin:** *Quickly* remove contaminated clothing. Rinse with flooding amounts of water for at least 15 min. Wash exposed area with soap and water. For reddened or blistered skin, consult a physician. **Inhalation:** Remove exposed person to fresh air and support breathing as needed. **Ingestion:** Never give anything by mouth to an unconscious or convulsing person. Contact a poison control center and unless otherwise advised, have that *conscious and alert* person drink 1 to 2 glasses of water to dilute. *Do not* induce vomiting! Aspiration of even a small amount of EB in vomitus can cause severe damage since its low viscosity and surface tension will cause it to spread over a large area of the lung tissue.

After first aid, get appropriate in-plant, paramedic, or community medical support.

Note to Physicians: BEI = mandelic acid in urine (1.5 g/g of creatinine), sample at end of shift at workweeks end. Since this test is not specific, test for EB in expired air for confirmation.

Section 7. Spill, Leak, and Disposal Procedures

Spill/Leak: Notify safety personnel. Isolate and ventilate area, deny entry and stay upwind. Shut off all ignition sources. Cleanup personnel should protect against vapor inhalation and skin/eye contact. Take up small spills with earth, sand, vermiculite, or other absorbent, noncombustible material and place in suitable container. Dike far ahead of large spill for later reclamation or disposal. Report any release >1000 lb. Follow applicable OSHA regulations (29 CFR 1910.120). **Environmental Transport:** If released to soil, EB partially evaporates into the atmosphere, with a half-life of hrs to wks, and some leaches into groundwater, especially in soil with low organic carbon content. Biodegradation occurs with a half-life of 2 days. Some EB may absorb to sediment or bioconcentrate in fish. Evidence points to slow biodegradation in groundwater. In air, it reacts with photochemically produced hydroxyl radicals with a half-life of hrs to 2 days. Additional amounts may be removed by rain. **Ecotoxicity Values:** Shrimp (*Mysidopsis bahia*), LC_{50} = 87.6 mg/L/96 hr; sheepshead minnow (*Cyprinodon variegatus*) LC_{50} = 275 mg/L/96 hr; fathead minnow (*Pimephales promelas*) LC_{50} = 42.3 mg/L/96 hr in hard water & 48.5 mg/L/96 hr in softwater. **Disposal:** A candidate for rotary kiln incineration at 1508 to 2912°F (820 to 1600°C), liquid injection incineration at 1202 to 2912°F (650 to 1600°C), and fluidized bed incineration at 842 to 1796°F (4[illegible] to 980°C). Contact your supplier or a licensed contractor for detailed recommendations. Follow applicable Federal, state, and local regulations.

[illegible] Designations

L[illegible]d as a RCRA Hazardous Waste (40 CFR 261.21): No. D001

[illegible] as a SARA Toxic Chemical (40 CFR 372.65)

S[illegible]A Extremely Hazardous Substance (40 CFR 355), TPQ: Not listed

Listed as a CERCLA Hazardous Substance* (40 CFR 302.4): Final Reportable Quantity (RQ), 1000 lb (454 kg) [* per CWA, Sec. 311 (b)(4) & CWA, Sec. 307 (a)]

OSHA Designations

Listed as an Air Contaminant (29 CFR 1910.1000, Table Z-1-A)

Section 8. Special Protection Data

Goggles: Wear protective eyeglasses or chemical safety goggles, per OSHA eye- and face-protection regulations (29 CFR 1910.133). Because contact lens use in industry is controversial, establish your own policy. **Respirator:** Seek professional advice prior to selection and use. Follow OSHA respirator regulations (29 CFR 1910.134) and, if necessary, wear a MSHA/NIOSH-approved respirator. For < 1000 ppm, use a powered air-purifying respirator with an appropriate organic vapor cartridge, a supplied-air respirator (SAR), SCBA, or chemical cartridge respirator with appropriate organic vapor cartridge. For < 2000 ppm, use a SAR or SCBA with a full facepiece. For emergency or nonroutine operations (cleaning spills, reactor vessels, or storage tanks), wear an SCBA. *Warning! Air-purifying respirators do not protect workers in oxygen-deficient atmospheres.* If respirators are used, OSHA requires a respiratory protection program that includes at least: medical certification, training, fit-testing, periodic environmental monitoring, maintenance, inspection, cleaning, and convenient, sanitary storage areas. **Other:** Wear chemically protective gloves, boots, aprons, and gauntlets made of Viton or polyvinylchloride to prevent skin contact. **Ventilation:** Provide general and local exhaust ventilation systems to maintain airborne concentrations below the OSHA PELs (Sec. 2). Local exhaust ventilation is preferred because it prevents contaminant dispersion into the work area by controlling it at its source.[103] **Safety Stations:** Make available in the work area emergency eyewash stations, safety/quick-drench showers, and washing facilities. **Contaminated Equipment:** Separate contaminated work clothes from street clothes and launder before reuse. Remove this material from your shoes and clean PPE. **Comments:** Never eat, drink, or smoke in work areas. Practice good personal hygiene after using this material, especially before eating, drinking, smoking, using the toilet, or applying cosmetics.

Section 9. Special Precautions and Comments

Storage Requirements: Store in a cool, dry, well-ventilated area away from ignition sources and oxidizers. Outside or detatched storage is preferred. If inside, store in a standard flammable liquids cabinet. Containers should have flame-arrester or pressure-vacuum venting. To prevent static sparks, electrically ground and bond all equipment used with ethylbenzene. Install Class 1, Group D electrical equipment. **Engineering Controls:** To reduce potential health hazards, use sufficient dilution or local exhaust ventilation to control airborne contaminants and to maintain levels as low as possible. Purge and ventilate reaction vessels before workers are allowed to enter for maintenance or cleanup. **Administrative Controls:** Consider preplacement and periodic medical exams of exposed workers that emphasize the CNS, skin, blood, and respiratory system.

Transportation Data (49 CFR 172.101)

Shipping Name: Ethylbenzene
[illegible]f Hazard Class: 3
[illegible]o.: UN1175
[illegible]f Packing Group: II
DOT Label: Flammable liquid
Special Provisions (172.102): T1

Packaging Authorizations
a) Exceptions: 173.150
b) Non-bulk Packaging: 173.202
c) Bulk Packaging: 173.242

Quantity Limitations
a) Passenger Aircraft or Railcar: 5L
b) Cargo Aircraft Only: 60 L

Vessel Stowage Requirements
a) Vessel Stowage: B
b) Other: —

***MSDS Collection* References:** 26, 73, 100, 101, 103, 124, 126, 127, 132, 133, 136, 139, 140, 148, 153, 159, 162, 163, 164, 167, 168, 171, 176, 179
Prepared by: M Gannon, BA; **Industrial Hygiene Review:** D Wilson, CIH; **Medical Review:** W Silverman, MD

Copyright © 1992 by Genium Publishing Corporation. Any commercial use or reproduction without the publisher's permission is prohibited. Judgments as to the suitability of information herein for the purchaser's purposes

Genium Publishing Corporation
One Genium Plaza
Schenectady, NY 12304-4690 USA
(518) 377-8854

Section 1. Material Identification

Toluene ($C_6H_5CH_3$) Description: Derived from petroleum i.e., dehydrogenation of cycloparaffin fractions followed by the aromatization of saturated aromatic hydrocarbons or by fractional distillation of coal-tar light oil and purified by rectification. Used widely as a solvent (replacing benzene in many cases) for oils, resins, adhesives, natural rubber, coal tar, asphalt, pitch, acetyl celluloses, cellulose paints and varnishes; a diluent for photogravure inks, raw material for organic synthesis (benzoyl & benzilidene chlorides, saccharine, TNT, toluene diisocyanate, and many dyestuffs), in aviation and high octane automobile gasoline, as a nonclinical thermometer liquid and suspension solution for navigational instruments.
Other Designations: CAS No. 108-88-3, Methacide, methylbenzene, methylbenzol, phenylmethane, toluol, Tolu-sol.
Manufacturer: Contact your supplier or distributor. Consult latest *Chemical Week Buyers' Guide*[73] for a suppliers list.

Cautions: Toluene is an eye, skin, and respiratory tract irritant becoming narcotic at high centrations. Liver and kidney damage has occurred. Pregnant women chronically exposed to toluene have shown teratogenic effects. Toluene is highly flammable.

NFPA
R 1
I 3
S 2*
K 3
* Skin absorption
3 / 2 / 0 / -

HMIS
H 2- Chronic effects
F 3
R 0
PPE-Sec. 8

Section 2. Ingredients and Occupational Exposure Limits

Toluene, < 100%; may contain a small amount of benzene (~ 1%), xylene, and nonaromatic hydrocarbons.

1991 OSHA PELs
8-hr TWA: 100 ppm (375 mg/m^3)
15-min STEL: 150 ppm (560 mg/m^3)

1990 IDLH Level
2000 ppm

1990 NIOSH RELs
TWA: 100 ppm (375 mg/m^3)
STEL: 150 ppm (560 mg/m^3)

1992-93 ACGIH TLV (Skin)
TWA: 50 ppm (188 mg/m^3)

1990 DFG (Germany) MAK*
TWA: 100 ppm (380 mg/m^3)
Half-life: 2 hr to end of shift
Category II: Substances with systemic effects
Peak Exposure Limit: 500 ppm, 30 min average value, 2/shift

1985-86 Toxicity Data†
Man, inhalation, TC_{Lo}: 100 ppm caused hallucinations, and changes in motor activity and changes in psychophysiological tests.
Human, oral, LD_{Lo}: 50 mg/kg; toxic effects not yet reviewed
Human, eye: 300 ppm caused irritation.
Rat, oral, LD_{50}: 5000 mg/kg
Rat, liver: 30 µmol/L caused DNA damage.

* Available information suggests damage to the developing fetus is probable.
†See NIOSH, *RTECS* (XS5250000), for additional irritation, mutation, reproductive, and toxicity data.

Section 3. Physical Data

Boiling Point: 232 °F (110.6 °C)
Melting Point: -139 °F (-95 °C)
Molecular Weight: 92.15
Density: 0.866 at 68 °F (20/4 °C)
Surface Tension: 29 dyne/cm at 68 °F (20 °C)
Viscosity: 0.59 cP at 68 °F (20 °C)
Refraction Index: 1.4967 at 20 °C/D
Water Solubility: Very slightly soluble, 0.6 mg/L at 68 °F (20 °C)
Other Solubilities: Soluble in acetone, alcohol, ether, benzene, chloroform, glacial acetic acid, petroleum ether, and carbon disulfide.
Vapor Pressure: 22 mm Hg at 68 °F (20 °C); 36.7 mm Hg at 86 °F (30 °C)
Saturated Vapor Density (Air = 0.075 lb/ft^3 or 1.2 kg/m^3): 0.0797 lb/ft^3 or 1.2755 kg/m^3
Odor Threshold (range of all referenced values): 0.021 to 69 ppm

Appearance and Odor: Colorless liquid with a sickly sweet odor.

Section 4. Fire and Explosion Data

Flash Point: 40 °F (4.4 °C) CC	Autoignition Temperature: 896 °F (480 °C)	LEL: 1.27% v/v	UEL: 7.0% v/v

Extinguishing Media: Toluene is a Class 1B flammable liquid. To fight fire, use dry chemical carbon dioxide, or 'alcohol-resistant' foam. Water spray may be ineffective as toluene floats on water and may actually spread fire. **Unusual Fire or Explosion Hazards:** Concentrated vapors are heavier than air and may travel to an ignition source and flash back. Container may explode in heat of fire. Toluenes' burning rate = 5.7 mm/min and its flame speed = 37 cm/sec. Vapor poses an explosion hazard indoors, outdoors, and in sewers. May accumulate static electricity. **Special Fire-fighting Procedures:** Because fire may produce toxic thermal decomposition products, wear a self-contained breathing apparatus (SCBA) with a full facepiece operated in pressure-demand or positive-pressure mode. Structural firefighter's protective clothing provides only limited protection. Apply cooling water to sides of tanks until well after fire is out. Stay away from ends of tanks. For massive fire in cargo area, use monitor nozzles or unmanned hose holders; if impossible, withdraw from fire and let burn. Withdraw immediately if you hear a rising sound from venting safety device or notice any tank discoloration due to fire because a BLEVE (boiling liquid expanding vapor explosion) may be imminent. Do not release runoff from fire control methods to sewers or waterways.

Section 5. Reactivity Data

Stability/Polymerization: Toluene is stable at room temperature in closed containers under normal storage and handling conditions. Hazardous polymerization can't occur. **Chemical Incompatibilities:** Strong oxidizers, concentrated nitric acid, nitric acid + sulfuric acid, dinitrogen tetroxide, silver perchlorate, bromine trifluoride, tetranitromethane, and 1,3-dichloro-5,5-dimethyl-2,4-imidazolididione. **Conditions to Avoid:** Contact with heat, ignition sources, or incompatibles. **Hazardous Products of Decomposition:** Thermal oxidative decomposition of toluene can produce carbon dioxide, and acrid, irritating smoke.

Section 6. Health Hazard Data

Carcinogenicity: The IARC,[164] NTP,[169] and OSHA[164] do not list toluene as a carcinogen. **Summary of Risks:** Toluene is irritating to the eyes, nose, and respiratory tract. Inhalation of high concentrations produces a narcotic effect sometimes leading to coma as well as liver and kidney damage. 93% of inhaled toluene is retained in the body of which 80% is metabolized to benzoic acid, then to hippuric acid and excreted in urine. The remainder is metabolized to *o*-cresol and excreted or exhaled unchanged. Toluene metabolism is inhibited by alcohol ingestion and is synergistic with benzene, asphalt fumes, or chlorinated hydrocarbons (i.e. perchloroethylene). Toluene is readily absorbed through the skin at 14 to 23 mg/cm^2/hr. Toluene is absorbed quicker during exercise than at rest and appears to be retained longer in obese versus thin victims; presumably due to its lipid solubility. There is inconsistent data on toluene's ability to damage bone marrow; chronic poisoning has resulted in anemia and leucopenia with biopsy showing bone marrow hypo-plasia. These reports are few and some authorities argue that the effects may have been due to benzene contaminants. Chronic inhalation during pregnancy has been associated with teratogenic effects on the fetus including microcephaly, CNS dysfunction, attentional deficits, developmental delay + language impairment, growth retardation, and physical defects including a small midface, short palpebral fissures, with deep-set eyes, low-set ears, flat nasal bridge with a small nose, micrognathia, and blunt fingertips. There is some evidence that toluene causes an autoimmune illness in which the body produces antibodies that cause inflammation of its own kidney.

Section 6. Health Hazard Data

lical Conditions Aggravated by Long-Term Exposure: Alcoholism and CNS, kidney, skin, or liver disease. **Target Organs:** CNS, liver, ey, skin. **Primary Entry Routes:** Inhalation, skin contact/absorption. **Acute Effects:** Vapor inhalation causes respiratory tract irritation, fatigue, kness, confusion, dizziness, headache, dilated pupils, watering eyes, nervousness, insomnia, parasthesis, and vertigo progressing to narcotic coma. th may result from cardiac arrest due to ventricular fibrillation with catecholamines loss. Liquid splashed in the eye causes conjunctival irritation, ansient corneal damage and possible burns. Prolonged skin contact leads to drying and fissured dermatitis. Ingestion causes GI tract irritation and symptoms associated with inhalation. **Chronic Effects:** Symptoms include mucous membrane irritation, headache, vertigo, nausea, appetite loss and alcohol intolerance. Repeated heavy exposure may result in encephalopathies (cerebellar ataxia and cognitive dysfunction), liver enlargement, and kidney dystrophy (wasting away). Symptoms usually appear at workdays end, worsen at weeks end and decrease or disappear over the weekend. **FIRST AID Eyes:** *Do not* allow victim to rub or keep eyes tightly shut. Gently lift eyelids and flush immediately and continuously with flooding amounts of water until transported to an emergency medical facility. Consult an ophthalmologist immediately. **Skin:** *Quickly* remove contaminated clothing. Rinse with flooding amounts of water for at least 15 min. Wash exposed area with soap and water. **Inhalation:** Remove exposed person to fresh air and support breathing as needed. **Ingestion:** Never give anything by mouth to an unconscious or convulsing person. Contact a poison control center and unless otherwise advised, have that *conscious and alert* person drink 1 to 2 glasses of water to dilute. *Do not* induce vomiting because of danger of aspiration into the lungs. Gastric lavage may be indicated if large amounts are swallowed; potential toxicity needs to be weighed against aspiration risk when deciding for or against gastric lavage. **Note to Physicians:** Monitor cardiac function. If indicated, use epinephrine and other catecholamines carefully, because of the possibility of a lowered myocardial threshold to the arrhythmogenic effects of such substances. Obtain CBC, electrolytes, and urinalysis. Monitor arterial blood gases. If toluene has > 0.02% (200 ppm) benzene, evaluate for potential benzene toxicity. BEI: hippuric acid in urine, sample at shift end (2.5 g/g creatinine); Toluene in venous blood, sample at shift end (1.0 mg/L).

Section 7. Spill, Leak, and Disposal Procedures

Spill/Leak: Notify safety personnel, isolate and ventilate area, deny entry, and stay upwind. Cleanup personnel protect against inhalation and skin/eye contact. Use water spray to cool and disperse vapors but it may not prevent ignition in closed spaces. Cellosolve, hycar absorbent materials, and fluorocarbon water can also be used for vapor suppression/containment. Take up small spill with earth, sand, vermiculite, or other absorbent, noncombustible material. Dike far ahead of large spills for later reclamation or disposal. For water spills, (10 ppm or greater) apply activated carbon at 10X the spilled amount and remove trapped material with suction hoses or use mechanical dredges/lifts to remove immobilized masses of pollutants and precipitates. Toluene can undergo fluidized bed incineration at 842 to 1796 °F (450 to 980 °C), rotary kiln incineration at 1508 to 2912 °F (820 to 1600 °C), or liquid injection incineration at 1202 to 2912 °F (650 to 1600 °C). Follow applicable OSHA regulations (29 CFR 1910.120). **Ecotoxicity Values:** Blue gill, LC_{50} = 17 mg/L/24 hr; shrimp (*Crangonfracis coron*), LC_{50} = 4.3 ppm/96 hr; fathead minnow (*Pimephales promelas*), LC_{50} = 36.2 mg/L/96 hr. **Environmental Degradation:** If released to land, toluene evaporates and undergoes microbial degradation. In water, toluene volatilizes and biodegrades with a half-life of days to several weeks. In air, toluene degrades by reaction with photochemically produced hydroxyl radicals. **Disposal:** Treat contaminated water by gravity separation of solids, followed by skimming of surface. Pass through dual media filtration and carbon absorption units (carbon ratio 1 kg to 10 kg soluble material). Return waste water from backwash to gravity separator. Contact your supplier or a licensed contractor for detailed recommendations. Follow applicable Federal, state, and local regulations.

PA Designations
ted as a RCRA Hazardous Waste (40 CFR 261.33): No. U220
ARA Extremely Hazardous Substance (40 CFR 355), TPQ: Not listed
sted as a CERCLA Hazardous Substance* (40 CFR 302.4): Final Reportable Quantity (RQ), 1000 lb (454 kg)
[* per RCRA, Sec. 3001; CWA, Sec. 311 (b)(4); CWA, Sec. 307 (a)]
Listed as a SARA Toxic Chemical (40 CFR 372.65): Not listed

OSHA Designations
Listed as an Air Contaminant (29 CFR 1910.1000, Table Z-1-A)

Section 8. Special Protection Data

Goggles: Wear protective eyeglasses with shatter-resistant glass and side-shields or chemical safety goggles, per OSHA eye- and face-protection regulations (29 CFR 1910.133). Because contact lens use in industry is controversial, establish your own policy. **Respirator:** Seek professional advice prior to respirator selection and use. Follow OSHA respirator regulations (29 CFR 1910.134) and, if necessary, wear a MSHA/NIOSH-approved respirator. For < 100 ppm, use any chemical cartridge respirator with appropriate organic vapor cartridges, any supplied-air respirator (SAR), or SCBA. For < 200 ppm, use any SAR operated in continuous-flow mode, any SAR or SCBA with a full facepiece, or any air-purifying respirator with a full facepiece having a chin-style, front or back mounted organic vapor canister. For emergency or nonroutine operations (cleaning spills, reactor vessels, or storage tanks), wear an SCBA. *Warning! Air-purifying respirators do not protect workers in oxygen-deficient atmospheres.* If respirators are used, OSHA requires a written respiratory protection program that includes at least: medical certification, training, fit-testing, periodic environmental monitoring, maintenance, inspection, cleaning, and convenient, sanitary storage areas. **Other:** Wear chemically protective gloves, boots, aprons, and gauntlets to prevent skin contact. Polyvinyl alcohol with a breakthrough time of > 8 hr, Teflon and Viton are recommended as suitable materials for PPE. **Ventilation:** Provide general and local exhaust ventilation systems to maintain airborne concentrations below the OSHA PELs (Sec. 2). Local exhaust ventilation is preferred because it prevents contaminant dispersion into the work area by controlling it at its source.[103] **Safety Stations:** Make available in the work area emergency eyewash stations, safety/quick-drench showers, and washing facilities. **Contaminated Equipment:** Separate contaminated work clothes from street clothes and launder before reuse. Remove toluene from your shoes and clean PPE. **Comments:** Never eat, drink, or smoke in work areas. Practice good personal hygiene after using this material, especially before eating, drinking, smoking, using the toilet, or applying cosmetics.

Section 9. Special Precautions and Comments

Storage Requirements: Prevent physical damage to containers. Store in a cool, dry, well-ventilated area away from ignition sources and incompatibles. Outside or detached storage is preferred. If stored inside, use a standard flammable liquids warehouse, room, or cabinet. To prevent static sparks, electrically ground and bond all equipment used with toluene. Do not use open lights in toluene areas. Install Class 1, Group D electrical equipment. Check that toluene is free of or contains < 1% benzene before use. **Engineering Controls:** To reduce potential health hazards, use sufficient dilution or local exhaust ventilation to control airborne contaminants and to maintain concentrations at the lowest practical level. **Administrative Controls:** Adopt controls for confined spaces (29 CFR 1910.146) if entering areas of unknown toluene levels (holes, wells, storage tanks). Consider preplacement and periodic medical exams of exposed workers that emphasize the CNS, liver, kidney, and skin. Include hemocytometric and thrombocyte count in cases where benzene is a contaminant of toluene. Monitor air at regular intervals to ensure effective ventilation.

Transportation Data (49 CFR 172.101)

DOT Shipping Name: Toluene	**Packaging Authorizations**	**Quantity Limitations**	**Vessel Stowage Requirements**
DOT Hazard Class: 3	**a) Exceptions:** 150	**a) Passenger Aircraft or Railcar:** 5L	**Vessel Stowage:** B
ID No.: UN1294	**b) Non-bulk Packaging:** 202	**b) Cargo Aircraft Only:** 60L	**Other:** --
DOT Packing Group: II	**c) Bulk Packaging:** 242		
DOT Label: Flammable Liquid			
Special Provisions (172.102): T1			

MSDS Collection **References:** 26, 73, 100, 101, 103, 124, 126, 127, 132, 140, 148, 153, 159, 163, 164, 167, 169, 171, 174, 175, 176, 180.
Prepared by: M Gannon, BA; **Industrial Hygiene Review:** PA Roy, CIH, MPH; **Medical Review:** AC Darlington, MD, MPH

Copyright © 1992 by Genium Publishing Corporation. Any commercial use or reproduction without the publisher's permission is prohibited. Judgments as to the suitability of information herein for the purchaser's purposes are necessarily the purchaser's responsibility. Although reasonable care has been taken in the preparation of such information, Genium Publishing Corporation

Genium Publishing Corporation
One Genium Plaza
Schenectady, NY 12304-4690 USA
(518) 377-8854

Material Safety Data Sheets Collection:

Sheet No. 318
Xylene (*Mixed Isomers*)

Issued: 11/80 Revision: E, 9/92

Section 1. Material Identification

39

Xylene (Mixed Isomers) (C_8H_{10}) Description: The commercial product is a blend of the three isomers [*ortho-(o-)*, *meta-(m-)*, *para-(p-)*] with the largest proportion being *m-* xylene. Xylene is obtained from coal tar, toluene by transalkylation, and pseudocumene. Used in the manufacture of dyes, resins, paints, varnishes, and other organics; as a general solvent for adhesives, a cleaning agent in microscope technique; as a solvent for Canada balsam microscopy; as a fuel component; in aviation gasoline, protective coatings, sterilizing catgut, hydrogen peroxide, perfumes, insect repellants, pharmaceuticals, and the leather industry; in the production of phthalic anhydride, isophthalic, and terephthalic acids and their dimethyl esters which are used in the manufacture of polyester fibers; and as an indirect food additive as a component of adhesives. Around the home, xylene is found as vehicles in paints, paint removers, degreasing cleaners, lacquers, glues and cements and as solvent/vehicles for pesticides.

Other Designations: CAS No. 1330-20-7 [95-47-6; 108-38-3; 106-42-3 (*o-*, *m-*, *p-*isomers)], dimethylbenzene, methyltoluene, NCI-C55232, Violet 3, xylol.

Manufacturer: Contact your supplier or distributor. Consult latest *Chemical Week Buyers' Guide*[73] for a suppliers list.

Cautions: Xylene is an eye, skin, and mucous membrane irritant and may be narcotic in high concentrations. It is a dangerous fire hazard.

R	1
I	2
S	2
K	3

NFPA

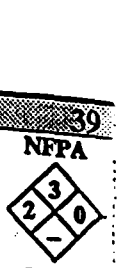

HMIS
H 2†
F 3
R 0
PPE ‡
† Chronic Effects
‡ Sec. 8

Section 2. Ingredients and Occupational Exposure Limits

Xylene (mixed isomers): the commercial product generally contains ~40% *m*-xylene; 20% each of *o*-xylene, *p*-xylene, and ethylbenzene; and small quantities of toluene. Unpurified xylene may contain pseudocumene.

1991 OSHA PELs
8-hr TWA: 100 ppm (435 mg/m³)
15-min STEL: 150 ppm (655 mg/m³)

1990 IDLH Level
1000 ppm

1990 NIOSH RELs
TWA: 100 ppm (435 mg/m³)
STEL: 150 ppm (655 mg/m³)

1992-93 ACGIH TLVs
TWA: 100 ppm (434 mg/m³)
STEL: 150 ppm (651 mg/m³)
BEI (Biological Exposure Index): Methylhippuric acids in urine at end of shift: 1.5 g/g creatinine

1990 DFG (Germany) MAK
TWA: 100 ppm (440 mg/m³)
Category II: Substances with systemic effects
Half-life: < 2 hr
Peak Exposure: 200 ppm, 30 min, average value, 4 peaks per shift

1985-86 Toxicity Data*
Human, inhalation, TC_{Lo}: 200 ppm produced olfaction effects, conjunctiva irritation, and other changes involving the lungs, thorax, or respiration.
Man, inhalation, LC_{Lo}: 10000 ppm/6 hr; toxic effects not yet reviewed.
Human, oral, LD_{Lo}: 50 mg/kg; no toxic effect noted.
Rat, oral, LD_{50}: 4300 mg/kg; toxic effect not yet reviewed.
Rat, inhalation, LC_{50}: 5000 ppm/4 hr; toxic effects not yet reviewed.

* See NIOSH, *RTECS* (XE2100000), for additional toxicity data.

Section 3. Physical Data

Boiling Point Range: 279 to 284 °F (137 to 140 °C)*
Boiling Point: *ortho:* 291 °F (144 °C); *meta:* 281.8 °F (138.8 °C); *para:* 281.3 °F (138.5 °C)
Freezing Point/Melting Point: *ortho:* -13 °F (-25 °C); *meta:* -53.3 °F (-47.4 °C); *para:* 55 to 57 °F (13 to 14 °C)
Vapor Pressure: 6.72 mm Hg at 70 °F (21 °C)
Saturated Vapor Density (Air = 1.2 kg/m³): 1.23 kg/m³, 0.077 lbs/ft³

Appearance and Odor: Clear, sweet-smelling liquid.

* Materials with wider and narrower boiling ranges are commercially available.

Molecular Weight: 106.16
Specific Gravity: 0.864 at 20 °C/4 °C
Water Solubility: Practically insoluble
Other Solubilities: Miscible with absolute alcohol, ether, and many other organic liquids.
Octanol/Water Partition Coefficient: logKow = 3.12-3.20
Odor Threshold: 1 ppm
Viscosity: <32.6 SUS

Section 4. Fire and Explosion Data

Flash Point: 63 to 77 °F (17 to 25 °C) CC	Autoignition Temperature: 982 °F (527 °C) (*m-*)	LEL: 1.1 (*m-*, *p-*); 0.9 (*o-*)	UEL: 7.0 (*m-*, *p-*); 6.7 (*o-*)

Extinguishing Media: For small fires, use dry chemical, carbon dioxide (CO_2), water spray or regular foam. For large fires, use water spray, fog or regular foam. Water may be ineffective. Use water spray to cool fire-exposed containers. **Unusual Fire or Explosion Hazards:** Xylene vapors or liquid (which floats on water) may travel to an ignition source and flash back. The heat of fire may cause containers to explode and/or produce irritating or poisonous decomposition products. Xylene may present a vapor explosion hazard indoors, outdoors, or in sewers. Accumulated static electricity may occur from vapor or liquid flow sufficient to cause ignition. **Special Fire-fighting Procedures:** Because fire may produce toxic thermal decomposition products, wear a self-contained breathing apparatus (SCBA) with a full facepiece operated in pressure-demand or positive-pressure mode. Structural firefighter's protective clothing will provide limited protection. If feasible and without risk, move containers from fire area. Otherwise, cool fire-exposed containers until well after fire is extinguished. Stay clear of tank ends. Use unmanned hose holder or monitor nozzles for massive cargo fires. If impossible, withdraw from area and let fire burn. Withdraw immediately in case of any tank discoloration or rising sound from venting safety device. Do not release runoff from fire control methods to sewers or waterways.

Section 5. Reactivity Data

Stability/Polymerization: Xylene is stable at room temperature in closed containers under normal storage and handling conditions. Hazardous polymerization cannot occur. Xylene is easily chlorinated, sulfonated, or nitrated. **Chemical Incompatibilities:** Incompatibilities include strong acids and oxidizers and 1,3-dichloro-5,5-dimethyl-2,4-imidazolidindione (dichlorohydrantoin). Xylene attacks some forms of plastics, rubber, and coatings. **Conditions to Avoid:** Avoid heat and ignition sources and incompatibles. **Hazardous Products of Decomposition:** Thermal oxidative decomposition of xylene can produce carbon dioxide, carbon monoxide, and various hydrocarbon products.

Section 6. Health Hazard Data

Carcinogenicity: The IARC,[160] NTP,[169] and OSHA[164] do not list xylene as a carcinogen. **Summary of Risks:** Xylene is an eye, mucous membrane, and respiratory tract irritant. Irritation starts at 200 ppm; severe breathing difficulties which may be delayed in onset can occur at high concentrations. It is a central nervous system (CNS) depressant and at high concentrations can cause coma. Kidney and liver damage can occur with xylene exposure. With prolonged or repeated cutaneous exposure, xylene produces a defatting dermatitis. Chronic toxicity is not well defined, but it is less toxic than benzene. Prior to the 1950s, benzene was often found as a contaminant of xylene and the effects attributed to xylene such as blood dyscrasias are questionable. Since the late 1950s, xylenes have been virtually benzene-free and blood dyscrasias have not been associated with xylenes. Chronic exposure to high concentrations of xylene in animal studies have demonstrated milk reversible decrease in red and white cell counts as well as increases in platelet counts.

Continue on next page

Section 6. Health Hazard Data, *continued*

irregularity was reported in association with workplace exposure to xylene perhaps due to effects on liver metabolism. Xylene crosses the human p[illegible]nta, but does not appear to be teratogenic under conditions tested to date. **Medical Conditions Aggravated by Long-Term Exposure:** CNS, [illegible]tory, eye, skin, gastrointestinal (GI), liver and kidney disorders. **Target Organs:** CNS, eyes, GI tract, liver, kidneys, and skin. **Primary [illegible] Routes:** Inhalation, skin absorption (slight), eye contact, ingestion. **Acute Effects:** Inhalation of high xylene concentrations may cause d[illegible]ess; nausea, vomiting, and abdominal pain; eye, nose, and throat irritation; respiratory tract irritation leading to pulmonary edema (fluid in l[illegible]drowsiness; and unconsciousness. Direct eye contact can result in conjunctivitis and corneal burns. Ingestion may cause a burning sensation in the oropharynx and stomach and transient CNS depression. **Chronic Effects:** Repeated or prolonged skin contact may cause drying and defatting of the skin leading to dermatitis. Repeated eye exposure to high vapor concentrations may cause reversible eye damage, peripheral and central neuropathy, and liver damage. Other symptoms of chronic exposure include headache, fatigue, irritability, chronic bronchitis, and GI disturbances such as nausea, loss of appetite, and gas.

FIRST AID *Emergency personnel should protect against exposure.* **Eyes:** *Do not* allow victim to rub or keep eyes tightly shut. Gently lift eyelids and flush immediately and continuously with flooding amounts of water until transported to an emergency medical facility. Consult a physician immediately. **Skin:** *Quickly* remove contaminated clothing. Rinse with flooding amounts of water for at least 15 min. Wash exposed area with soap and water. For reddened or blistered skin, consult a physician. Carefully dispose of contaminated clothing as it may pose a fire hazard. **Inhalation:** Remove exposed person to fresh air and support breathing as needed. Monitor exposed person for respiratory distress. **Ingestion:** Never give anything by mouth to an unconscious or convulsing person. Contact a poison control center and unless otherwise advised, *do not induce vomiting!* If spontaneous vomiting should occur, keep exposed person's head below the hips to prevent aspiration (breathing liquid xylene into the lungs). *Aspiration of a few millimeters of xylene can cause chemical pneumonitis, pulmonary edema, and hemorrhage.* **Note to Physicians:** Hippuric acid or the ether glucuronide of *ortho*-toluic acid may be useful in diagnosis of *meta-*, *para-* and *ortho*-xylene exposure, respectively. Consider gastric lavage if a large quantity of xylene was ingested. Proceed gastric lavage with protection of the airway from aspiration; consider endotracheal intubation with inflated cuff.

Section 7. Spill, Leak, and Disposal Procedures

Spill/Leak: Notify safety personnel, evacuate all unnecessary personnel, remove all heat and ignition sources, and ventilate spill area. Cleanup personnel should protect against vapor inhalation and skin or eye contact. If feasible and without undue risk, stop leak. Use appropriate foam to blanket release and suppress vapors. Water spray may reduce vapor, but does not prevent ignition in closed spaces. For small spills, absorb on paper and evaporate in appropriate exhaust hood or absorb with sand or some non-combustible absorbent and place in containers for later disposal. For large spills dike far ahead of liquid to contain. Do not allow xylene to enter a confined space such as sewers or drains. On land, dike to contain or divert to impermeable holding area. Apply water spray to control flammable vapor and remove material with pumps or vacuum equipment. On water, contain material with natural barriers, booms, or weirs; apply universal gelling agent; and use suction hoses to remove spilled material. Report any release in excess of 1000 lb. Follow applicable OSHA regulations (29 CFR 1910.120). **Environmental Transport:** Little bioconcentration is expected. Biological oxygen demand 5 (after 5 days at 20 °C): 0.64 (no stated isomer). **Ecotoxicity values:** LD_{50}, Goldfish, 13 mg/L/24 hr, conditions of bioassay not specified, no specific isomer. **Environmental Degradation:** In the atmosphere, xylenes degrade by reacting with photochemically produced hydroxyl radicals with a half-life ranging from 1-1.7 hr. in the summer to 10-18 hr in winter or a typical loss of 67-86% per day. Xylenes are resistant to hydrolysis. **Soil Absorption/Mobility:** Xylenes have low to moderate adsorption to soil and when spilled on land, [illegible]latilize and leach into groundwater. **Disposal:** As a hydrocarbon, xylene is a good candidate for controlled incineration. Contact your supplier [illegible]ensed contractor for detailed recommendations. Follow applicable Federal, state, and local regulations.

Er[illegible] Designations	OSHA Designations
S[illegible] Extremely Hazardous Substance (40 CFR 355): Not listed	Listed as an Air Contaminant (29 CFR 1910.1000, Table Z-1-A)
Li[illegible] as a SARA Toxic Chemical (40 CFR 372.65)	

Listed as a RCRA Hazardous Waste (40 CFR 261.33): No. U239, F003 (spent solvent)

Listed as a CERCLA Hazardous Substance* (40 CFR 302.4): Final Reportable Quantity (RQ), 1000 lb (454 kg) [* per Clean Water Act, Sec. 311(b)(4); per RCRA, Sec. 3001]

Section 8. Special Protection Data

Goggles: Wear protective eyeglasses or chemical safety goggles, per OSHA eye- and face-protection regulations (29 CFR 1910.133). Because contact lens use in industry is controversial, establish your own policy. **Respirator:** Seek professional advice prior to respirator selection and use. Follow OSHA respirator regulations (29 CFR 1910.134) and, if necessary, wear a MSHA/NIOSH-approved respirator. For concentrations >1000 ppm, use any chemical cartridge respirator with organic vapor cartridges; any powered, air-purifying respirator with organic vapor cartridges; any supplied-air respirator; or any self-contained breathing apparatus. For emergency or nonroutine operations (cleaning spills, reactor vessels, or storage tanks), wear an SCBA. *Warning! Air-purifying respirators do not protect workers in oxygen-deficient atmospheres.* If respirators are used, **Other:** Wear chemically protective gloves, boots, aprons, and gauntlets to prevent all skin contact. With breakthrough times > 8 hr, consider polyvinyl alcohol and fluorocarbon rubber (Viton) as materials for PPE. **Ventilation:** Provide general and local exhaust ventilation systems to maintain airborne concentrations below the OSHA PELs (Sec. 2). Local exhaust ventilation is preferred because it prevents contaminant dispersion into the work area by controlling it at its source.[103] **Safety Stations:** Make available in the work area emergency eyewash stations, safety/quick-drench showers, and washing facilities. **Contaminated Equipment:** Separate contaminated work clothes from street clothes. Launder contaminated work clothing before wearing. Remove this material from your shoes and clean PPE. **Comments:** Never eat, drink, or smoke in work areas. Practice good personal hygiene after using this material, especially before eating, drinking, smoking, using the toilet, or applying cosmetics.

Section 9. Special Precautions and Comments

Storage Requirements: Store in clearly labelled, tightly closed, containers in a cool, well-ventilated place, away from strong oxidizing materials and heat and ignition sources. During transferring operations, electrically ground and bond metal containers. **Engineering Controls:** To reduce potential health hazards, use sufficient dilution or local exhaust ventilation to control airborne contaminants and to maintain concentrations at the lowest practical level. Use hermetically sealed equipment, transfer xylene in enclosed systems, avoid processes associated with open evaporating surfaces, and provide sources of gas release with enclosures and local exhaust ventilation. Use Class I, Group D electrical equipment. **Administrative Controls:** Establish air and biological monitoring programs and evaluate regularly. Consider preplacement and periodic medical examinations including a complete blood count, a routine urinalysis, and liver function tests. Consider hematologic studies if there is any significant contamination of the solvent with benzene. If feasible, consider the replacement of xylene by less toxic solvents such as petrol (motor fuel) or white spirit. Before carrying out maintenance and repair work, steam and flush all equipment to remove any xylene residues.

Transportation Data (49 CFR 172.101)

	Packaging Authorizations	Quantity Limitations	Vessel Stowage Requirements
I[illegible] Shipping Name: Xylenes	a) Exceptions: 173.150	a) Passenger, Aircraft, or Railcar: 5L	a) Vessel Stowage: B
D[illegible] Hazard Class: 3	b) Nonbulk Packaging: 173.202	b) Cargo Aircraft Only: 60L	b) Other: –
IT[illegible] UN1307	c) Bulk Packaging: 173.242		
D[illegible] Packing Group: II			
DOT Label: Flammable Liquid			
Special Provisions (172.102): T1			

MSDS Collection References: 26, 73, 89, 100, 101, 103, 124, 126, 127, 132, 133, 136, 139, 140, 148, 149, 153, 159, 163, 164, 167, 171, 174, 176, 180.

Prepared by: MJ Wurth, BS; Industrial Hygiene Review: PA Roy, MPH, CIH; Medical Review: W Silverman, MD

Copyright © 1992 by Genium Publishing Corporation. Any commercial use or reproduction without the publisher's permission is prohibited. Judgments as to the suitability of information herein for the purchaser's purposes are necessarily the purchaser's responsibility. Although reasonable care has been taken in the preparation of such information, Genium Publishing Corporation extends no warranties, makes no representations, and assumes

APPENDIX E

MACHINERY AND MECHANIZED EQUIPMENT

1.0 GENERAL

1.1 Before any machinery or mechanized equipment is placed in use, it shall be inspected and tested by a competent person and certified to be in safe operating condition.

1.1.1 Inspections and tests shall be in accordance with manufacturer's recommendations and shall be documented.

1.1.2 Records of tests and inspections shall be maintained at the site by the contractor, and shall be made available upon request of the designated authority, and shall become part of the official project file. Results of the inspections will be provided on the Contractor Quality Control Report, **Figure 6-2**, and attached to the Contractor Production Report, **Figure 6-1**. The Contractor Quality Control Report and the Contractor Production Report will be submitted to the ROICC on a daily basis.

1.2 Daily/Shift Inspections and Tests

1.2.1 All machinery and equipment shall be inspected daily (when in use) to ensure safe operating conditions: The employer shall designate competent persons to conduct the daily inspections and tests.

1.2.2 Tests shall be made at the beginning of each shift during which the equipment is to be used to evaluate that the brakes and operating systems are in proper working condition and that all required safety devices are in place and functional.

1.3 Whenever any machinery or equipment is found to be unsafe, or whenever a deficiency which affects the safe operations of equipment is observed, the equipment shall be immediately taken out of service and its use prohibited until unsafe conditions have been corrected.

1.3.1 A tag indicating that the equipment shall not be operated, and that the tag shall not be removed, shall be placed in a conspicuous location on the equipment. Where required, lockout procedures shall be used.

1.3.2. The tag shall remain in its attached location until it is demonstrated to the individual deadlining the equipment that it is safe to operate.

1.3.3 When corrections are complete, the machinery or equipment shall be retested and reinspected prior to being returned to service.

1.4 Machinery and mechanized equipment shall be operated only by designated qualified personnel.

1.4.1 Machinery or equipment shall not be operated in a manner that will endanger persons or property nor shall the safe operating speeds or loads be exceeded.

1.4.2 Getting off or on any equipment while it is in motion is prohibited.

1.4.3 Machinery and equipment shall be operated in accordance with the manufacturer's instructions and recommendations.

1.5 When the manufacturer's instructions or recommendations are more stringent than the requirements of this manual, the manufacturer's instructions or recommendations shall apply.

1.6 Inspections or determinations of road conditions and structures shall be made in advance to assure that clearances and load capacities are safe for the passage or placing of any machinery or equipment.

1.7 Equipment requirements

1.7.1 Seats or equal protection must be provided for each person required to ride on equipment.

1.7.2 Equipment operated on the highway shall be equipped with headlights, taillights, brake lights, and backup light and turn signals visible from the front and rear.

1.7.3 All equipment with windshields shall be equipped with powerful wipers. Vehicles that operate under conditions that cause fogging or frosting of windshields shall be equipped with operable defogging or defrosting devices.

1.7.4 Mobile equipment, operating within an off-highway job site not open to public traffic, shall have a service brake system and a parking brake system capable of stopping and holding the equipment while fully loaded on the grade of operation. In addition, it is recommended that heavy duty hauling equipment have an emergency brake system which will automatically stop the equipment upon failure of the service brake system; this emergency brake system should be manually operable from the driver's position.

1.8 Maintenance and repairs.

1.8.1 Preventive maintenance procedures recommended by the manufacturer shall be followed.

1.8.2 All machinery or equipment shall be shut down and positive means taken to prevent its operation while repairs or manual lubrications are being done. Equipment designed to be serviced while running are exempt from this requirement.

1.8.3 All repairs on machinery or equipment shall be made at a location which will protect repair personnel from traffic.

1.8.4 Heavy machinery, equipment, or parts thereof which are suspended or held apart by slings, hoist, or jacks also shall be substantially blocked or cribbed before personnel are permitted to work underneath or between them.

1.9 Bulldozer and scraper blades, end-loader buckets, dump bodies, and similar equipment shall be either fully lowered or blocked when being repaired or when not in use. All controls shall be in a neutral position, with the engines stopped and brakes set, unless work being performed on the machine requires otherwise.

1.10 Stationary machinery and equipment shall be placed on a firm foundation and secured before being operated.

1.11 All mobile equipment and the areas in which they are operated shall be adequately illuminated while work is in progress.

1.12 All vehicles which will be parked or moving slower than normal traffic on haul roads shall have a yellow flashing light or four-way flashers visible from all directions.

1.13 No one shall be permitted in the truck cab during loading operations except the driver and then only if the truck has a cab protector.

1.14 Mechanized equipment shall be shut down prior to and during fueling operations. Closed systems, with automatic shut-off which will prevent spillage if connections are broken, may be used to fuel diesel powered equipment left running.

1.15 Towing

1.15.1 All towing devices used on any combination of equipment shall be structurally adequate for the weight drawn and securely mounted.

1.15.2 Persons shall not be permitted to get between a towing vehicle and the piece of towed equipment until both have been completely stopped with all brakes set and wheels chocked on both vehicle and equipment.

1.16 All machinery or equipment operating on rails, tracks, or trolleys (except railroad equipment) shall be provided with substantial track scrapers or track cleaners - effective in both directions - on each wheel or set of wheels.

1.17 Parking

1.17.1 Whenever equipment is parked the parking brake shall be set.

1.17.2 Equipment parked on an incline shall have the wheels chocked or track mechanisms blocked and the parking brake set.

1.17.3 All equipment left unattended at night, adjacent to a highway in normal use or adjacent to construction areas where work is in progress, shall have lights or reflectors, or barricades equipped with lights or reflectors, to identify the location of the equipment.

1.18 No modification or additions which affect the capacity or safe operation of machinery or equipment shall be made without the manufacturer's written approval.

1.18.1 If such modifications or changes are made, the capacity, operation, and maintenance instruction plates, tags, or decals shall be changed accordingly.

1.18.2 In no case shall the original safety factor of the equipment be reduced.

1.19 Steering or spinner knobs shall not be attached to the steering wheel unless the steering mechanism prevents road reactions from causing the steering handwheel to spin: when permitted, the steering knob shall be mounted within the periphery of the wheel.

1.20 Safeguards shall be provided to prevent machinery and equipment operating on floating plan from going into the water.

1.21 All industrial trucks shall meet the requirements of design, construction, stability, inspection, testing, maintenance, and operation, defined in American National Standards Institute (ANSI)/ASME B56.1, Safety Standards and Low Lift and High Lift Trucks.

1.22 Lift trucks, stackers, and similar equipment shall have the rated capacity posted on the vehicle so as to be clearly visible to the operator. When auxiliary removable counterweights are provided by the manufacturer, corresponding alternate rated capacities also shall be clearly shown on the vehicle. The ratings shall not be exceeded.

1.23 The controls of loaders, excavators, or similar equipment with folding booms or lift arms shall not be operated from a ground position unless so designed.

1.24 Personnel shall not work or pass under or ride in the buckets or booms of loaders in operation.

1.25 Tire service vehicles shall be operated so that the operator will be clear of tires and rims when hoisting operations are being performed. Tires large enough to require hoisting equipment will be secured from movement by continued support of the hoisting equipment unless bolted to the vehicle hub or otherwise restrained.

1.26 Each bulldozer, scraper, dragline, crane, motor grader, front-end loader, mechanical shovel, backhoe, and other similar equipment shall be equipped with at least one dry chemical or carbon-dioxide fire extinguisher with a minimum rating of 5-B:C.

1.27 Fill hatches on water haul vehicles shall be secured or the opening reduced to a maximum of 8 inches.

2.0 GUARDING AND SAFETY DEVICES

2.1 Reverse signal (back-up) alarm.

2.1.1 All self-propelled construction and industrial equipment, whether moving alone or in combination, shall be equipped with a reverse signal alarm. Equipment designed and operated so that the operator is always facing the direction of motion does not require a reverse signal alarm.

2.1.2 Reverse signal alarms shall be audible and sufficiently distinct to be heard under prevailing conditions.

2.1.3 Alarms shall operate automatically upon commencement of backward motion. Alarms may be continuous or intermittent (not to exceed 3-second intervals) and shall operate during the entire backward movement.

2.1.4 Reverse signal alarms shall be in addition to requirements for signal persons.

2.2 A warning device or signal person shall be provided where there is danger to persons from moving equipment, swinging loads, buckets, booms, etc.

2.3 Guarding

2.3.1 All belts, gears, shafts, pulleys, sprockets, spindles, drums, flywheels, chains, or other reciprocating, rotating or moving parts of equipment shall be guarded when exposed to contact by persons or when they otherwise create a hazard.

2.3.2 All hot surfaces of equipment, including exhaust pipes or other lines, shall be guarded or insulated to prevent injury and fire.

2.3.3 All equipment having a charging skip shall be provided with guards on both sides and open end of the skip area to prevent persons from walking under the skip while it is elevated.

2.3.4 Platforms, footwalks, steps, handholds, guardrails, and toe boards shall be designed, constructed, and installed on machinery and equipment to provide safe footing and access ways.

2.3.5 Equipment shall be provided with suitable working surfaces of platforms, guard rails, and hand grabs when attendants or other employees are required to ride for operating purposes outside the operator's cab or compartment: platforms and steps shall be of nonskid material.

2.3.6 Substantial overhead protection shall be provided for the operators of fork lifts and similar material handling equipment.

2.4 Fuel tanks shall be located in a manner which will not allow spills or overflows to run onto engine, exhaust, or electrical equipment.

2.5 Exhaust or discharges from equipment shall be so directed that they do not endanger persons or obstruct views of operator.

2.6 A safety tire rack, cage, or equivalent protection shall be provided and used when inflating, mounting, or dismounting tires installed on split rims, or rims equipped with locking rings or similar devices.

2.7 No guard, safety appliance, or device shall be removed from machinery or equipment, or made ineffective except for making immediate repairs, lubrications, or adjustments, and then only after the power has been shut off. All guards and devices shall be replaced immediately after completion of repairs and adjustments and before power is turned on.

2.8 Seat belts and anchorages meeting the requirements of 49 CFR 571 shall be installed and worn in all motor vehicles (installation and usage on buses is optional); two-piece seat belts and anchorages for construction equipment shall comply with applicable federal specification or SAE J 386a.

2.9 All high rider industrial trucks shall be equipped with overhead guards which meet the structural requirements defined in paragraph 4.21 of ANSI/ASME B51 1, Safety Standards for Low Lift and High Lift Trucks.

2.10 Suitable protection against the elements, falling or flying objects, swinging loads, and similar hazards shall be provided for operators of all machinery or equipment; glass used in windshields or cabs shall be safety glass.

2.11 Falling object protective structures (FOPS).

2.11.1 All bulldozers, tractors, or similar equipment used in clearing operations shall be provided with guards, canopies, or grills to protect the operator from falling and flying objects as appropriate to the nature of the clearing operations.

2.11.2 FOPS for other construction, industrial, and grounds-keeping equipment will be furnished when the operator is exposed to falling objects hazards.

2.11.3 FOPS will be certified by either the manufacture or a licensed engineer as complying with the following applicable SAE recommended practices:

2.11.3.1 J 231 - Minimum Performances Criteria for FOPS

2.11.3.2 J 1043 - Minimum Performance Criteria for FOPS for Industrial Equipment

2.12 Rollover Protective Structures (ROPS).

2.12.1 In addition to the requirements of 1.8 and 1.11, seat belts and ROPS shall be installed on:

2.12.1.1 Crawler and rubber-tire tractors including dozers, push and pull tractors, winch tractors, and mowers;

2.12.1.2 off-the-highway self-propelled pneumatic-tire earth movers such as trucks, pans, scrapers, bottom dumps and end dumps;

2.12.1.3 motor graders;

2.12.1.4 water tank trucks having a tank height less than the cab; and other self-propelled construction equipment such as front-end loaders, backhoes, rollers, and compactors.

2.12.2 ROPS are <u>not</u> required on:

2.12.2.1 trucks designed for hauling on public highways;

2.12.2.2 crane-mounted dragline backhoes;

2.12.2.3 sections of rollers and compactors of the tandem steel-wheeled and self-propelled pneumatic tired type that do not have an operator's station;

2.12.2.4 self-propelled rubber-tired lawn and garden tractors and side boom pipe-laying tractors operated solely on flat terrain, not exposed to rollover hazards; and

2.12.2.5 cranes, draglines, or equipment on which the operator's cab and boom rotate as a unit.

2.12.3 ROPS may be removed from certain types of equipment when the work cannot be performed with the ROPS in place and when ROPS removal is approved in writing by the Designated Authority.

2.12.4 The operating authority shall furnish proof from the manufacturer or certification from a licensed engineer that the ROPS complies with the following SAE standards, as applicable:

2.12.4.1 J167a - Overhead Protection for Agricultural Tractors - Test Procedures and Performance Requirements;

2.12.4.2 J 1040c - Performance Criteria for ROPS for Construction, Earthmoving, Forestry, and Mining Machines;

2.12.4.3 J 1042 - Operator Protection for Industrial Equipment;

2.12.4.4 J 1084a - Operator Protective Structure Performance Criteria for certain Forestry Equipment;

2.12.4.5 J 1194 - ROPS for Wheeled Agricultural Tractors.

2.12.5 ROPS shall also be acceptable if they meet the criteria of any state which has a DOL approved OSHA program or meet Water and Power Resources Service requirements.

2.12.6 The following information permanently affixed to the ROPS is acceptable in lieu of a written certification:

2.12.6.1 manufacturer's or fabricator's name and address;

2.12.6.2 ROPS model number, if any; and

2.12.6.3 machine make, model, or series number that the structure is designed to fit.

2.12.7 Field welding on ROPS shall be performed by welders who are certified by the contractor as being qualified in accordance with American Welding Society Standards D1.1, Military Standard MIL-STD 248, or the equivalent.

2.13 All points requiring lubrication during operation shall have fittings so located or guarded to be accessible without hazardous exposure.

2.14 All machinery or equipment and material hoists operating on rails, tracks, or trolleys shall have positive stops or limiting devices either on the equipment, rails, tracks, or trolleys to prevent overrunning safe limits.

2.15 Whenever long-bed end-dump trailers are used in off-road hauling they should be equipped with a roll-over warning device: the device should have a continuous monitoring display at the operator station to provide the operator with a quick and easily-read indicator and audible warning of an unsafe condition.

3.0 EARTH DRILLING EQUIPMENT

3.1 Earth drilling equipment shall be operated, inspected, and maintained as specified in the manufacturer's operating manual: a copy of the manual will be available at the job site.

3.2 Prior to bringing earth drilling equipment on the job site, a survey shall be conducted to identify overhead electrical hazards and potential ground hazards, such as contact with unexploded ordnance, hazardous agents in the soil, or underground utilities.

3.2.1 The location of any overhead or ground hazards shall be identified on a site layout plan.

3.2.2 The findings of this survey and the controls for all potential hazards shall become a part of the hazard analysis for the activity.

3.3 The hazard analysis for an earth drilling activity will not be accepted unless:

3.3.1 it contains a copy of the material safety data sheet for the drilling fluids, if required;

3.3.2 it meets the requirements of 01.A.09; and

3.3.3 it indicates that the site layout plan specified in 16.M.02 will become a part of the analysis, and will be covered at the preparatory inspection (pre-activity safety briefing), when the plan has been completed.

3.4 Training.

3.4.1 All members of drilling crews shall be trained in:

3.4.1.1 the operation, inspection, and maintenance of the equipment;

3.4.1.2 the safety features and procedures to be utilized during operation, inspection, and maintenance of the equipment; and

3.4.1.3 overhead electrical line and underground hazards.

3.4.2 This training will be based on the equipment operating manual and the hazard analysis for the activity.

3.5 Earth drilling equipment shall be equipped with two easily-accessible emergency shutdown devices, one for the operator and one for the helper.

3.6 Clearance from electrical sources shall be as specified in 11.E.05. Drilling equipment shall be posted with signs warning the operator of electrical hazards.

3.6.2 The equipment operator shall ascertain proper clearance prior to moving equipment. Clearance shall be monitored by a spotter or by the use of an electrical proximity warning device.

3.7 Moving equipment

3.7.1 Before earth drilling equipment is moved, the travel route shall be surveyed for overhead and terrain hazards, particularly overhead electrical hazards.

3.7.2 Earth drilling equipment shall not be transported with the mast up. The exception is movement of the equipment required in drilling a series of holes, such as in blasting, if the following conditions are satisfied:

3.7.2.1 movement is over level, smooth terrain;

3.7.2.2 the path of travel has been inspected for stability and the absence of holes, other ground hazards, and electrical hazards; and

3.7.2.3 the travel distance is limited to short, safe distances.

3.8 Equipment set-up.

3.8.1 Equipment shall be set-up on stable ground and maintained level: cribbing shall be used when necessary.

3.8.2 Outriggers shall be extended per the manufacturer's specifications.

3.8.3 When drilling equipment is operated in areas with the potential for classification as a confined space, the requirements of Section 6.1 shall be followed.

3.9 Equipment operation.

3.9.1 Weather conditions shall be monitored: operations shall cease during electrical storms or when electrical storms are imminent.

3.9.2 Drill crew members shall not wear loose clothing or equipment.

3.9.3 Auger guides shall be used on hard surfaces.

3.9.4 The operator shall verbally alert employees and visually ensure employees are clear from dangerous parts of equipment prior to starting or engaging equipment.

3.9.5 The discharge of drilling fluids shall be channeled away from the work area to prevent the ponding of water.

3.9.6 Hoists shall be used only for their designed intent and shall not be loaded beyond their rated capacity. Steps shall be taken to prevent two-blocking of hoists.

3.9.7 The equipment manufacturer's procedures shall be followed if rope becomes caught in, or objects pulled into, a cathead.

3.9.8 Drill rods shall be neither run nor rotated through rod slipping devices: no more than 1 foot of drill rod column shall be hoisted above the top of the drill mast. Drill rod tool joints shall not be made up, tightened, or loosened while the rod column is supported by rod slipping device.

3.9.9 Dust shall be controlled.

3.9.10 Augers shall be cleaned only when the rotating mechanism is in neutral and the auger stopped: long-handled shovels shall be used to move cuttings from the auger.

3.9.11 Open boreholes shall be capped and flagged; open excavations shall be barricaded.