M00146.AR.005926
MCAS CHERRY POINT
5090.3a

FINAL OPERABLE UNIT 1 (OU 1) CENTRAL GROUNDWATER PLUME NEAR SOURCE IN SITU BIOREMEDIATION PILOT STUDY IMPLEMENTATION PLAN MCAS CHERRY POINT NC

3/1/2011

CH2M HILL

Final

Operable Unit 1
Central Groundwater Plume
Near Source In-Situ Bioremediation
Pilot Study Implementation Plan

Marine Corps Air Station
Cherry Point, North Carolina

Contract Task Order 0144

March 2011

Prepared for

Department of the Navy
Naval Facilities Engineering Command
Mid-Atlantic

Under the

NAVFAC CLEAN 1000 Program
Contract N62470-08-D-1000

Prepared by

11301 Carmel Commons Blvd., Suite 304
Charlotte, North Carolina 28226
NC Engineering License #F-0699

Contents

Acronyms and Abbreviations ..... **v**

1 Introduction **1-1**

2 Site Background **2-1**
2.1 Site Description 2-1
2.2 Description of Pilot Study Area 2-2
2.2.1 Hydrostratigraphy 2-2
2.2.2 Aquifer Properties 2-3
2.2.3 Groundwater Flow 2-3
2.2.4 Nature and Extent of Impacts 2-3

3 Pilot Study Description **3-1**
3.1 Pilot Study Overview, Objectives, and Goals 3-1
3.1.1 Study Overview 3-1
3.1.2 Study Objectives and Goals 3-1
3.2 Technology Description 3-2
3.2.1 Enhanced Reductive Dechlorination 3-2
3.2.2 Biobarrier Technology 3-3

4 Pilot Study Implementation **4-1**
4.1 Site Preparation 4-1
4.1.1 Utility Location 4-1
4.1.2 Well Installation 4-1
4.2 Groundwater Gauging 4-2
4.3 Baseline Groundwater Monitoring 4-3
4.4 Injections 4-3
4.4.1 Injection Equipment 4-3
4.4.2 ERD Substrate Injection 4-3
4.5 Post-Injection Groundwater Monitoring 4-4

5 Health and Safety and Residuals Management **5-1**
5.1 Health and Safety 5-1
5.2 General Safety 5-1
5.3 Residuals Management 5-1
5.3.1 Waste Streams 5-1
5.3.2 Waste Management 5-1
5.3.3 Container Labels 5-2

6 Site Activity Considerations **6-1**

7 Reporting **7-1**

8 Project Management 8-1
8.1 Project Schedule 8-1
8.2 Project Organization 8-1

9 References 9-1

Tables

2-1 Summary of Potential Source Areas

4-1 Well Construction Details
4-2 Sample Strategy
4-3 Sample Summary

Figures

1-1 Base Location Map
1-2 OU1 Location Map

2-1 Sites within OU1
2-2 OU1 Monitoring Well Network and Locations of Hydrogeologic Cross-Sections
2-3 VOC Isoconcentrations and Cross Section A-A′
2-4 VOC Isoconcentrations and Cross Section B-B′
2-5 2009 Groundwater Elevation Map Upper Surficial Aquifer
2-6 2009 Groundwater Elevation Map Lower Surficial Aquifer
2-7 Simplified Conceptual Site Model of OU1
2-8 Pilot Study Area Location Map
2-9 Trichloroethene (TCE) Isoconcentration Map Upper Surficial Aquifer
2-10 Trichloroethene (TCE) Isoconcentration Map Lower Surficial Aquifer
2-11 1,2-Dichloroethene (1,2-DCE) Isoconcentration Map Upper Surficial Aquifer
2-12 1,2-Dichloroethene (1,2-DCE) Isoconcentration Map Upper Surficial Aquifer
2-13 Vinyl Chloride Isoconcentration Map Upper Surficial Aquifer
2-14 Vinyl Chloride Isoconcentration Map Lower Surficial Aquifer

4-1 Proposed Near Source In-Situ Bioremediation Pilot Study Area
4-2 Substrate Injection P&ID and Details

8-1 Project Schedule
8-2 Project Organization

Acronyms and Abbreviations

bgs	below ground surface
CLEAN	Comprehensive Long-term Environmental Action—Navy
COC	contaminant of concern
CTO	Contract Task Order
DCA	dichloroethane
DCE	dichloroethene
DNAPL	dense non-aqueous phase liquid
DRMO	Defense Reutilization and Marketing Office
EAD	Environmental Affairs Department
ERD	enhanced reductive dechlorination
EVO	emulsified vegetable oil
FFA	Federal Facilities Agreement
FRCE	Fleet Readiness Center
FS	Feasibility Study
ft/day	feet per day
ft/ft	foot per foot
FTL	Field Team Leader
g	gram
g/g	grams of product per gram
gpm	gallons per minute
H&S	health and safety
HSP	Health and Safety Plan
ID	inner diameter
IDW	investigation-derived waste
ISEB	in-situ enhanced bioremediation
IWTP	Industrial Wastewater Treatment Plan
µg/L	micrograms per liter
MCAS	Marine Corps Air Station
MFSP	Master Field Sampling Plan
mg/L	milligrams per liter
mV	millivolt
NAD	North American Datum
NADEP	Naval Aviation Depot
NAVD	North American Vertical Datum
NAVFAC	Naval Facilities Engineering Command
NC 2L Standards	North Carolina Administrative Code Title 15A, Subchapter 2L Groundwater Quality Standards

NCDENR	North Carolina Department of Environment and Natural Resources
ORP	oxidation-reduction potential
OU	Operable Unit
P&ID	piping and instrumentation diagram
PCA	tetrachloroethane
PCE	tetrachloroethene
PM	Project Manager
PPE	personal protective equipment
PVC	polyvinyl chloride
QA/QC	quality assurance/quality control
RCRA	Resource Conservation and Recovery Act
RI	Remedial Investigation
ROI	radius of influence
SAP	Sampling and Analysis Plan
SOD	soil oxidant demand
SOP	standard operating procedure
SPCS	State Plane Coordinate System
SRS™	Slow Release Emulsified Vegetable Oil Substrate
TCE	trichloroethene
TOC	total organic carbon
TSD	treatment, storage, or disposal
UFP	Uniform Federal Policy
ULOCO	North Carolina One Call Center
USEPA	United States Environmental Protection Agency
VC	vinyl chloride
VOC	volatile organic compound

SECTION 1

Introduction

This document presents the Pilot Study Implementation Plan for Operable Unit (OU) 1, denoted as the OU1 Central Groundwater Plume, located aboard Marine Corps Air Station (MCAS) Cherry Point, North Carolina (**Figures 1-1** and **1-2**). This Implementation Plan is prepared under the Naval Facilities Engineering Command (NAVFAC)—Mid-Atlantic, Comprehensive Long-term Environmental Action—Navy (CLEAN) 1000 Contract N62470-08-D-1000, Contract Task Order (CTO) 144.

The *Draft Feasibility Study, Operable Unit 1, Central Groundwater Plume, Marine Corps Air Station, Cherry Point, North Carolina* (CH2M HILL, 2010) (2010 Draft FS) evaluated potential remedial alternatives to address groundwater impacts identified at OU1 (**Figure 1-2**). Near source *in situ* enhanced bioremediation (ISEB) was examined in the Feasibility Study (FS) for the treatment of trichloroethene (TCE), 1,2-dichloroethene (1,2-DCE), and vinyl chloride (VC), in addition to other site-related contaminants of concern (COCs) in groundwater. In August 2010, the Partnering Team agreed to conduct a field-scale pilot study at OU1 to evaluate the site-specific effectiveness of near source ISEB and for potential optimization of full-scale implementation during remedial design.

This Pilot Study Implementation Plan is organized as follows:

- **Section 1, Introduction—**Presents an overview of the project and Implementation Plan.
- **Section 2, Site Background—**Presents the general site background and description of the pilot study area.
- **Section 3, Pilot Study Descriptions—**Presents an overview of the pilot study objectives and goals and a conceptual technical approach for the pilot study.
- **Section 4, Pilot Study Implementation—**Discusses how the pilot study will be conducted.
- **Section 5, Health and Safety and Residuals Management—**Outlines issues to be presented in the Health and Safety Plan (HSP) for the project and presents the process for managing investigation-derived waste (IDW).
- **Section 6, Site Activity Considerations –** Outlines the site-specific requirements and constraints applicable during project implementation.
- **Section 7, Reporting—**Describes the reporting that will occur for the field implementation.
- **Section 8, Project Management—**Provides the project schedule and organization.
- **Section 9, References—**Provides the references used in this document.

Tables and figures are included at the end of each section. A Uniform Federal Policy (UFP) Sampling and Analysis Plan (SAP), to address the collection of analytical data specific to the pilot studies, will be issued under separate cover.

Legend

- Cities
- Rivers and Streams
- Military Installation
- County Boundary

N
W E
S

0 20,000 40,000
Feet

Figure 1-1
Base Location Map
Marine Corps Air Station Cherry Point
Cherry Point, North Carolina

CH2MHILL.

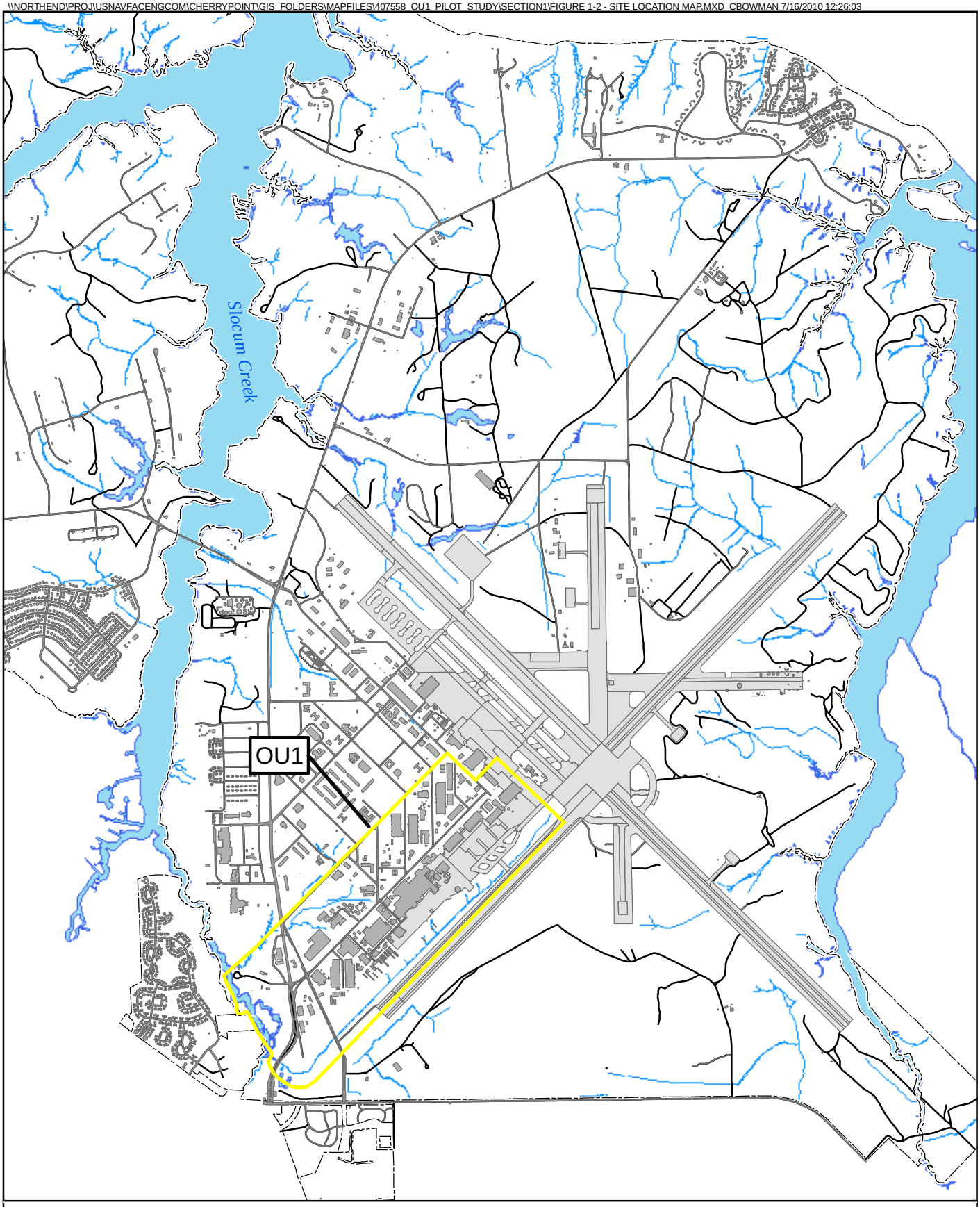

Legend

- OU Boundary
- Base Boundary
- Buildings
- Runway
- Road
- Surface Water

N
W E
S

0 1,500 3,000
Feet

Figure 1-2
OU1 Location Map
Marine Corps Air Station Cherry Point
Cherry Point, North Carolina

CH2MHILL.

SECTION 2

Site Background

Comprehensive information concerning site history, contaminant concentrations, plume distribution, and subsurface geology/hydrogeology was presented in the *Final Remedial Investigation for Operable Unit 1 (OU1)* (TetraTech NUS, 2002) (2002 Remedial Investigation [RI]) for the results of historical site investigations performed at OU1 from 1983 to 2000, in the *Final OU1 Remedial Investigation Addendum* (CH2M HILL, 2009) (2009 RI Addendum) for the results of historical site investigations performed at OU1 from 2000 to 2008, and in the 2010 Draft FS for results of the 2009 additional investigation activities. Information relevant to the pilot study area is summarized below.

2.1 Site Description

MCAS Cherry Point is a 13,164-acre military reservation located adjacent to the city of Havelock in southeastern Craven County, North Carolina (**Figure 1-1**). MCAS Cherry Point was commissioned in 1942 and provides support facilities and services for the Second Marine Aircraft Wing, the Fleet Readiness Center-East (FRCE, formerly Naval Aviation Depot [NADEP]), Combat Service Support Detachment 21 of the Second Marine Logistics Group, the Naval Air Maintenance Training Group Detachment, and the Defense Reutilization and Marketing Office (DRMO). MCAS Cherry Point maintains facilities for training and for supporting the Atlantic Fleet Marine Force aviation units and is designated as a primary aviation supply point.

OU1 is an industrial area approximately 565 acres in size, located in the southwestern portion of MCAS Cherry Point (**Figure 1-2**). OU1 is bounded by C Street and Sandy Branch to the northwest, portions of the MCAS Cherry Point flightline and runway to the northeast and southeast, and East Prong Slocum Creek to the southwest (**Figure 2-1**).

On May 12, 2005, the Navy, United States Environmental Protection Agency (USEPA), and North Carolina Department of Environment and Natural Resources (NCDENR) executed a Federal Facilities Agreement (FFA) for MCAS Cherry Point. Under the FFA, all past and future work at IR Program sites, SWMUs, and AOCs were to be reviewed, and a course of action for future work requirements at each site is to be developed. Eleven sites at OU1 were initially identified in the FFA as requiring additional investigation, and a twelfth site, Site 98, was discovered by MCAS Cherry Point during an investigation of USTs at Building 4032 and identified as a new site for inclusion in the FFA in 1999 (NAVFAC, 2005). These OU1 sites are shown on **Figure 2-1** and are listed as follows:

- Site 14 - Motor Transportation
- Site 15 - Ditch and Area Behind NADEP
- Site 16 - Landfill at Sandy Branch
- Site 17 - DRMO Drainage Ditch
- Site 18 - Facilities Maintenance Compound
- Site 42 - Industrial Wastewater Treatment Plant

- Site 47 - Industrial Area Sewer System
- Site 51 - Building 137 Plating Shop
- Site 52 - Building 133 Plating Shop and Ditch
- Site 83 - Building 96 Former Pesticide Mixing Area
- Site 92 – Volatile Organic Compounds (VOCs) in Groundwater near the Stripper Barn
- Site 98 - VOCs in Groundwater near Building 4032

Of the 12 sites identified in the FFA to be investigated as part of the 2002 RI (**Figure 2-1**), six sites were identified as potential source areas contributing to the OU1 Central Groundwater Plume as described in the 2009 RI Addendum (CH2M HILL, 2009). These sites consist of Sites 42, 47, 51, 52, 92, and 98, and each is summarized in **Table 2-1**.

2.2 Description of Pilot Study Area

2.2.1 Hydrostratigraphy

The pilot study will be conducted within the surficial aquifer above the Yorktown confining unit, just downgradient of the Building 133 source area. A physical description of the surficial aquifer is provided below. The locations of hydrogeologic cross-sections through OU1 are shown in **Figure 2-2**, and the conceptual cross-sections of A-A′ and B-B′, representing the area in the vicinity to where the pilot study is to be conducted, are shown in **Figures 2-3** and **2-4**. VOC isoconcentrations are also shown in these cross-sections, illustrating vertical plume distribution. Regional and additional site-specific geological information can be found in the 2002 RI and 2009 RI Addendum.

Surficial Aquifer

The surficial aquifer consists of the Holocene (Quaternary) undifferentiated sands and Pleistocene (Quaternary) Flanner Beach Formation. The aquifer consists of unconsolidated, interfingered beds of fine-grained sand, silt, clay, shell, and peat beds, and scattered deposits of coarse-grained material as part of relic beach ridges and alluvium (USGS, 1996; TetraTech, 2002).

The surficial aquifer is the first-encountered groundwater beneath OU1 and is unconfined (**Figures 2-3** and **2-4**). The saturated thickness ranges from approximately 30 to 45 feet beneath OU1, and is controlled by the fine-grained Yorktown confining unit at the base of the aquifer. Recharge is by the infiltration of precipitation. No groundwater production from the surficial aquifer occurs in the area.

The surficial aquifer has been evaluated as two different groundwater zones due to minor differences in aquifer properties and in order to more precisely delineate the vertical distribution of contamination: the upper and lower surficial aquifers. The upper surficial aquifer is defined as the upper 10 to 15 feet of saturated thickness, and is generally monitored by wells installed just below or across the water table. The lower surficial aquifer is defined as the lower 20 to 30 feet of the aquifer and monitored by wells installed just above the Yorktown confining unit. The upper surficial aquifer generally contains more finer-grained materials than the lower surficial aquifer. However, the upper and lower surficial aquifers are in direct hydraulic communication.

2.2.2 Aquifer Properties

Aquifer properties were estimated by conducting single-well aquifer hydraulic conductivity ("slug") testing at various monitoring wells within the upper and lower surficial aquifer. The hydraulic conductivity values were estimated to range between 0.23 to 14.1 feet per day (ft/day) and 6.9 to 78.9 ft/day for the upper and lower surficial aquifers, respectively, in the areas nearest the pilot study area in the vicinity of Building 133 (CH2M HILL, 2009).

2.2.3 Groundwater Flow

Groundwater flows generally westward in the upper and lower surficial aquifers towards East Prong Slocum Creek and Sandy Branch, with an average horizontal hydraulic gradient of approximately 0.004 feet per foot (ft/ft) (**Figures 2-5** and **2-6**) (CH2M HILL, 2010). Groundwater flow appears to have minimal discharge to Sandy Branch Tributaries #1 and #2 and follows along their same general direction. The average linear horizontal groundwater velocity in the upper and lower surficial aquifers is estimated at approximately 0.1 to 0.2 ft/day (CH2M HILL, 2010).

2.2.4 Nature and Extent of Impacts

The sampling activities conducted during the RIs for OU1 included soil, groundwater, sediment, and surface water sampling as part of the 2002 RI (TetraTech, 2002), soil and groundwater sampling as part of the 2009 RI Addendum (CH2M HILL, 2009), and groundwater sampling as part of the 2009 additional investigation activities (Appendix A of the 2010 Draft FS [CH2M HILL, 2010]). **Figure 2-7** presents a graphical representation of the conceptual site model for the OU1 Central Groundwater Plume and supports the discussion in this section.

The following discussion focuses on the nature and extent of groundwater VOC and SVOC related impacts relevant to the area where the pilot study is to be conducted, northwest of and parallel to A Street and south of the Industrial Wastewater Treatment Plant (IWTP) (**Figure 2-8**).

VOCs

The most prevalent VOCs detected above regulatory standards within the Central Groundwater Plume (in order based on the greatest frequency of exceedances) included TCE, 1,2-DCE, VC, 1,1-dichloroethane (1,1-DCA), and 1,1-DCE. These chemicals generally exceeded the regulatory standards on a frequency of greater than 10 percent. Other VOCs related to chlorinated solvents detected above regulatory standards, but less frequently, included tetrachloroethene (PCE), 1,1,1-trichloroethane (1,1,1-TCA), 1,1,2,2-tetrachloro-ethane (1,1,2,2-PCA), and 1,2-DCA.

The most-elevated TCE concentrations (**Figures 2-9** and **2-10**) occurred beneath Building 133, at concentrations that may be indicative of the presence of dense non-aqueous phase liquid (DNAPL) (maximum concentration of 62,000 micrograms per liter (µg/L), as reported in the 2009 RI Addendum [CH2M HILL, 2009]). Beneath Building 133, TCE generally occurs only within the upper surficial aquifer and was not observed in the lower surficial aquifer directly beneath the building. TCE extends vertically from the upper surficial aquifer into the lower surficial aquifer at locations downgradient of Building 133, and the plume extends laterally from the western portion of the building over 3,000 feet in a southwesterly

direction to East Prong Slocum Creek and Sandy Branch. TCE was not observed on the western side of the creeks, as the plume is believed to discharge to the creeks.

Detections of 1,2-DCE (**Figures 2-11** and **2-12**) and VC (**Figures 2-13** and **2-14**) generally occurred at monitoring wells that also registered exceedances of North Carolina Administrative Code Title 15A, Subchapter 2L Groundwater Quality Standards (NC 2L Standards) for TCE. The most-elevated concentration of cis-1,2-DCE (maximum concentration of 33,000 µg/L, as reported in the 2009 RI Addendum [CH2M HILL, 2009]) was detected within the upper surficial aquifer beneath Building 133. However, the most-elevated concentration of VC (maximum concentration of 8,000 µg/L, as reported in the RI Addendum) was detected beneath the IWTP within the upper surficial aquifer. Similar to TCE, 1,2- DCE and VC contamination extends vertically from the upper surficial aquifer beneath Building 133 to the lower surficial aquifer downgradient of the building, and laterally to Sandy Branch and East Prong Slocum Creek.

TABLE 2-1
Summary of Potential Source Areas
Marine Corps Air Station Cherry Point
Cherry Point, North Carolina

Site	Description
Site 42: Industrial Wastewater Treatment Plant (IWTP)	Originally constructed in 1957 to treat wastes from industrial sources such as metal plating, painting, aircraft maintenance, vehicle maintenance, and stormwater. A groundwater extraction and treatment system operated at the site from 1998-2005 to remediate the groundwater VOC plume in the vicinity of FRCE.
Site 47: Industrial Area Sewer System	Construction began in 1942 and was expanded over time for a system of underground pipes and aboveground drains to transfer industrial wastewater from various parts of FRCE and OU1 to the IWTP from processes such as metal plating, metal finishing, solvent degreasing, paint stripping, painting, fuel storage, fueling, aircraft washing, and general maintenance. Site 47 only includes the industrial sewers within OU1 that currently discharge to the IWTP. Concentrated wastes are now containerized and transported to the IWTP. Leaks were detected at several locations within the sewer system in the past and have been repaired. Inspections and repairs are conducted as part of the facility's ongoing maintenance process.
Site 51: Building 137 Former Plating Shop	Former Plating Shop that operated from 1942 to 1990, was located within Building 137, and consisted of approximately 4,000 square feet (ft^2) that included a 3-foot-deep sump for containment of spillage and tank overflows. The wastes generated in the plating shop consisted of plating solution overflow and rinse water containing zinc and chromium that were discharged to the sump. The sump discharged to the industrial sewer system (Site 47) until 1987, when the sump was plugged and the plating shop converted to a closed-loop system. From then until the Plating Shop was moved in 1990, wastes were transported to the IWTP (Site 42) in containers for batch treatment.
Site 52: Building 133 Former Plating Shop and Ditch	Former Plating Shop that operated from 1942 to 1990, was located in Building 133, and consisted of approximately 2,000 ft^2 that included a 2.5-ft-deep sump for containment of spillage and tank overflows. Former employees indicated that a ditch was formerly present behind Building 133 that received stormwater and industrial wastewater discharge from the Plating Shop and other areas within Building 133. This former ditch was covered in the 1970s by an addition to Building 133. The plating shop area was cleaned and renovated in 1996 and is currently used to process and store non-hazardous parts and supplies. The wastes generated in the plating shop consisted of plating solution overflow and rinse water that discharged to the sump. The sump wastes likely discharged to the former ditch behind Building 133 prior to the installation of the industrial sewer system (Site 47). An addition constructed on the southeastern side of the building subsequently covered this ditch. The sump then discharged to the industrial sewer system (Site 47) until 1987, when the sump was plugged and the plating shop converted to a closed-loop system. From then until the plating shop was moved in 1990, wastes were transported to the IWTP (Site 42) in containers for batch treatment.
Site 92: VOCs in Groundwater near the Stripper Barn	Site 92 is a plume of VOC-contaminated groundwater near the Stripper Barn portion of Building 137, where paint is removed from aircraft. The area around the site is covered with buildings and concrete, and portions of the industrial sewer system (Site 47) are located beneath and around the Stripper Barn. In the past, large quantities of solvent were used to remove paint; during the paint removal process, spent solvent flowed into the industrial sewer system. The current paint removal method requires approximately 90 percent less solvent, and spent solvent is captured for proper disposal. Any historical spills that occurred outside the building may have flowed toward storm drains located northeast of the Stripper Barn.
Site 98: VOCs in Groundwater near Building 4032	Site 98 is a plume of VOC-contaminated groundwater near Building 4032, located southeast of the IWTP in the central portion of OU1. Site 98 was discovered by MCAS Cherry Point during an investigation of underground storage tanks (USTs) at Building 4032 in 1994, and was identified as a new site in 1999.

\\NORTHEND\PROJ\USNAVFACENGCOM\CHERRYPOINT\GIS_FOLDERS\MAPFILES\407558_OU1_PILOT_STUDY\SECTION2\FIGURE 2-1 - OPERABLE UNIT 1 LOCATION MAP.MXD CBOWMAN 7/16/2010 12:27:39

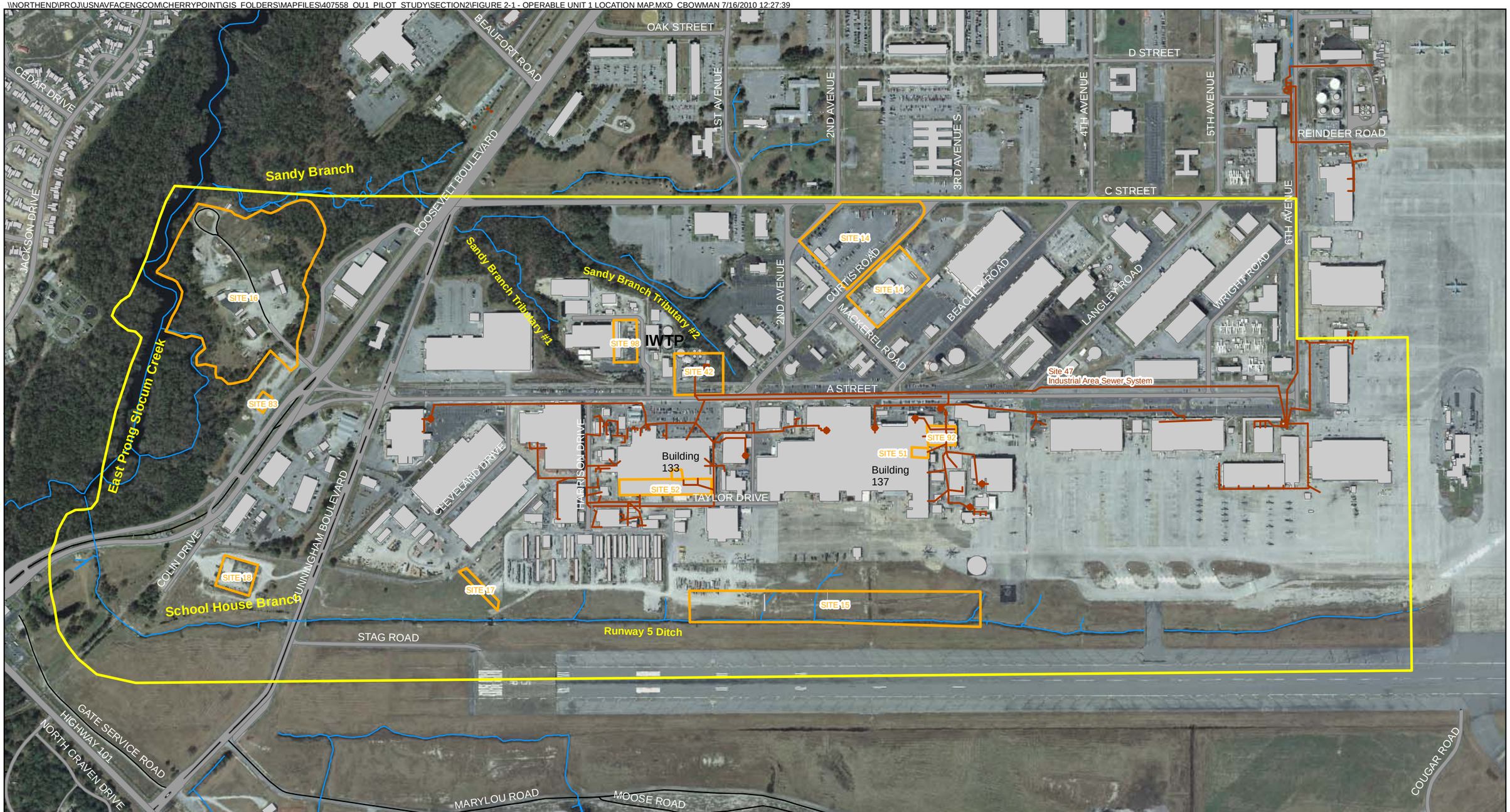

Legend

- Surface Water
- Industrial Area Sewer System
- Site Boundary
- OU1 Boundary
- Existing Buildings

IWTP - Industrial Wastewater Treatment Plant

N W E S

0 500 1,000 Feet

Figure 2-1
Sites Within OU1
Marine Corps Air Station Cherry Point
Cherry Point, North Carolina

CH2MHILL.

Legend

- Extraction Well
- Upper Surficial Monitoring Well
- Lower Surficial Monitoring Well
- Yorktown Monitoring Well
- Cross Section Transects
- Surface Water
- OU1 Boundary
- Existing Buildings

IWTP - Industrial Wastewater Treatment Plant

N W E S

0 600 1,200 Feet

Figure 2-2
OU1 Monitoring Well Network and
Location of Hydrogeologic Cross-Sections
Marine Corps Air Station Cherry Point
Cherry Point, North Carolina

CH2MHILL.

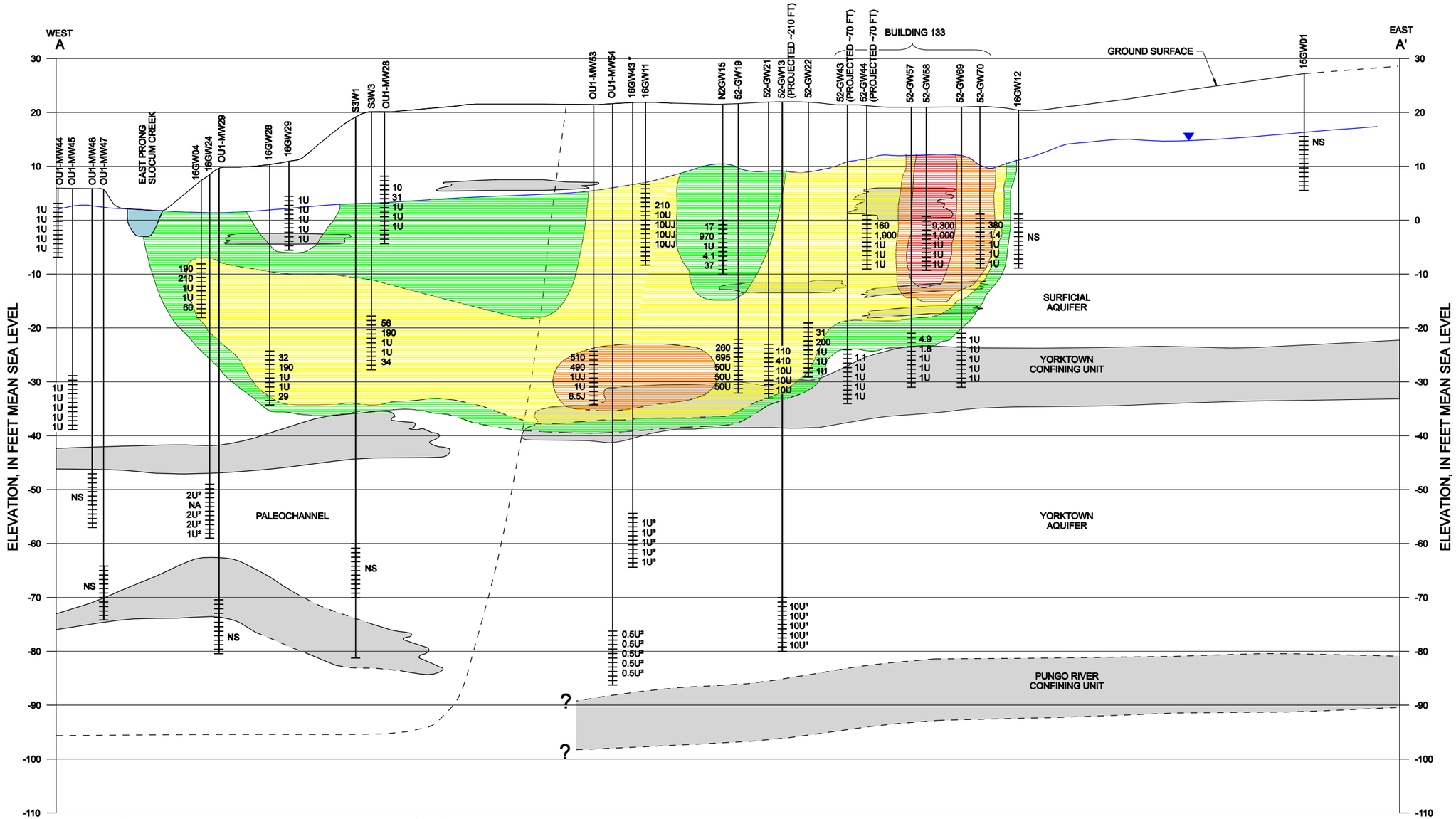

LEGEND

- WELL SCREEN INTERVAL
- LINE OF APPROXIMATELY EQUAL TCE ISOCONCENTRATION IN µg/L
- PREDOMINANTLY COARSE-GRAINED MATERIAL
- PREDOMINANTLY FINE-GRAINED MATERIAL

TCE ISOCONCENTRATION CONTOURS

- 3 – 30 µg/L
- 30 – 300 µg/L
- 300 – 3,000 µg/L
- 3,000 – 11,000 µg/L
- >11,000 µg/L

NOTES.

ALL ANALYTICAL DATA IS FROM THE SPRING 2009 SAMPLING EVENT UNLESS OTHERWISE NOTED.

1. ANALYTICAL DATA IS FROM THE APRIL AND MAY 2006 SAMPLING EVENT.
2. ANALYTICAL DATA IS FROM EITHER MARCH AND MAY 2005 SAMPLING EVENT.
3. ANALYTICAL DATA IS FROM THE AUGUST 2008 SAMPLING EVENT.

CONCENTRATIONS ARE PRESENTED IN THE FOLLOWING ORDER:

TRICHLOROETHENE (TCE)
1,2 - DICHLOROETHENE (1,2 -DCE)
1,1,1 - TRICHLOROETHANE (1,1,1 -TCA)
1,1 - DICHLOROETHENE (1,1 - DCE)
VINYL CHLORIDE

ALL CONCENTRATIONS ARE IN µg/L

NA = NOT ANALYZED
µg/L = MICROGRAMS PER LITER
NS = NOT SAMPLED
J = ESTIMATED VALUE
NC2L FOR TCE = 3 µg/L (Jan 2010)

VERTICAL SCALE: 10 – 0
APPROXIMATE HORIZONTAL SCALE (SCALE IN FEET): 0 – 300

VERTICAL EXAGGERATION = 30

Figure 2-3
VOC Isoconcentrations Cross Section A-A'
Marine Corps Air Station Cherry Point
Cherry Point, North Carolina

CH2MHILL

FILENAME: fn01g004_358454.dgn PLOT DATE: 12/28/2009

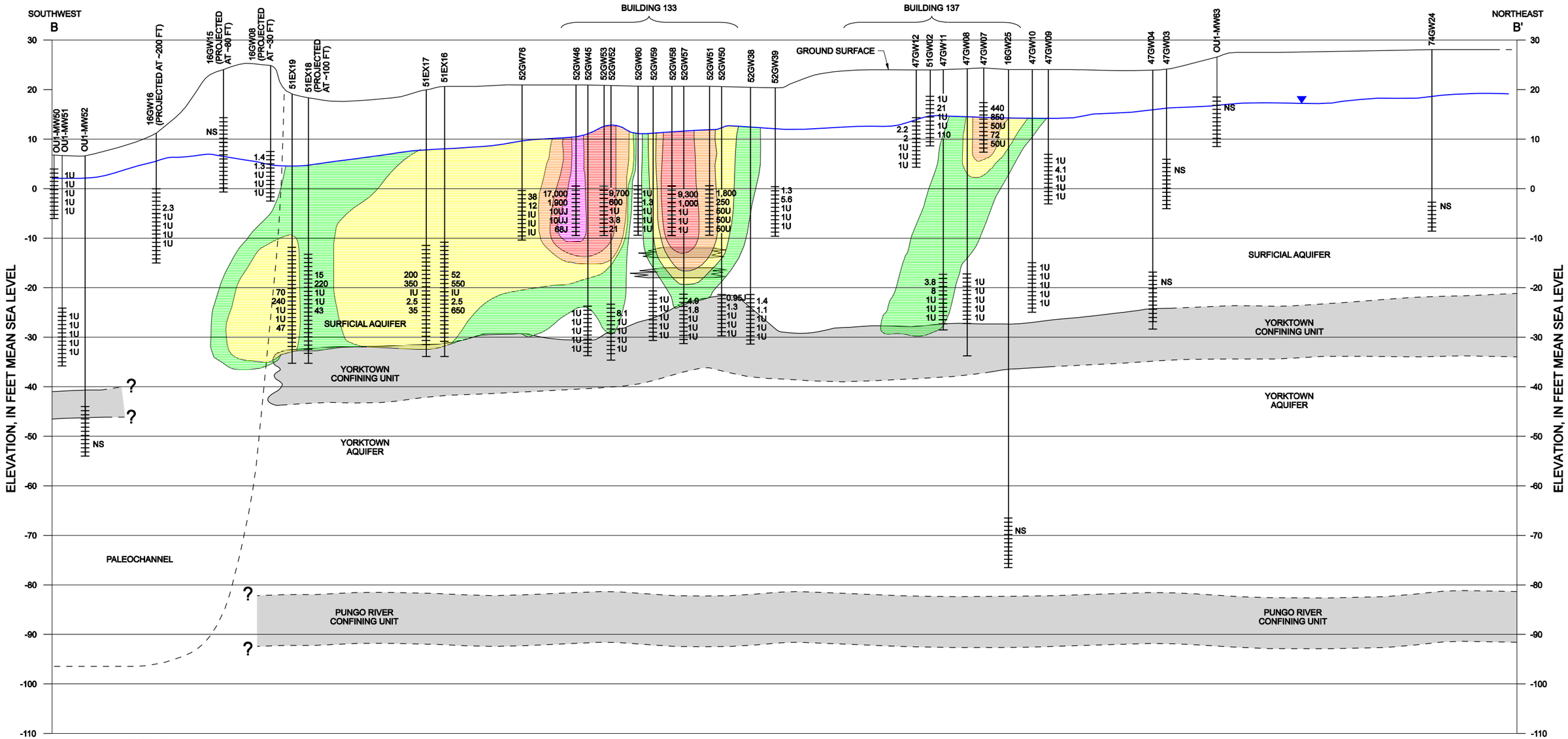

LEGEND

- WELL SCREEN INTERVAL
- LINE OF APPROXIMATELY EQUAL TCE ISOCONCENTRATION IN µg/L
- PREDOMINANTLY COARSE-GRAINED MATERIAL
- PREDOMINANTLY FINE-GRAINED MATERIAL

TCE ISOCONCENTRATION CONTOURS

- 3 – 30 µg/L
- 30 – 300 µg/L
- 300 – 3,000 µg/L
- 3,000 – 11,000 µg/L
- >11,000 µg/L

ALL ANALYTICAL DATA IS FROM THE APRIL AND MAY 2006 SAMPLING EVENT UNLESS OTHERWISE NOTED.

1. ANALYTICAL DATA IS FROM THE MAY 2005 SAMPLING EVENT.

2. ANALYTICAL DATA IS FROM THE NOVEMBER 2005 SAMPLING EVENT.

3. ANALYTICAL DATA IS FROM THE MARCH 2000 SAMPLING EVENT.

CONCENTRATIONS ARE PRESENTED IN THE FOLLOWING ORDER:
TRICHLOROETHENE (TCE)
1,2 - DICHLOROETHENE (1,2 -DCE)
1,1,1 - TRICHLOROETHANE (1,1,1 -TCA)
1,1 - DICHLOROETHENE (1,1 - DCE)
VINYL CHLORIDE

ALL CONCENTRATIONS ARE IN µg/L

NA = NOT ANALYZED
µg/L = MICROGRAMS PER LITER
NS = NOT SAMPLED
J = ESTIMATED VALUE
NC2L FOR TCE = 3 µg/L (Jan 2010)

VERTICAL SCALE: 10 – 0
APPROXIMATE HORIZONTAL SCALE (SCALE IN FEET): 0 – 300

VERTICAL EXAGGERATION = 30

Figure 2-4
VOC Isoconcentrations Cross Section B-B'
Marine Corps Air Station Cherry Point
Cherry Point, North Carolina

CH2MHILL

FILENAME: fn01g005_358454.dgn PLOT DATE: 12/28/2009

\\NORTHEND\PROJ\USNAVFACENGCOM\CHERRYPOINT\GIS_FOLDERS\MAPFILES\407558_OU1_PILOT_STUDY\SECTION2\FIGURE 2-5 - GW CONTOUR UPPER SURFICIAL.MXD CBOWMAN 8/23/2010 14:08:14

Legend

- Extraction Well
- Monitoring Well
- Groundwater Elevation Contour (ft msl)
- Surface Water
- Operable Unit (OU) Boundary
- Existing Buildings
- Paved

Notes:
1. ft msl - feet (relative to) mean sea level
2. NU - Not used in contouring

N W E S

0 200 400 Feet

Figure 2-5
2009 Groundwater Elevation Map
Upper Surficial Aquifer
Marine Corps Air Station Cherry Point
Cherry Point, North Carolina

CH2MHILL

\\NORTHEND\PROJ\USNAVFACENGCOM\CHERRYPOINT\GIS_FOLDERS\MAPFILES\407558_OU1_PILOT_STUDY\SECTION2\FIGURE 2-6 - GW CONTOUR LOWER SURFICIAL_MXD CBOWMAN 8/23/2010 14:09:41

Legend

- Extraction Well
- Monitoring Well
- Groundwater Elevation Contour (ft msl)
- Surface Water
- Operable Unit (OU) Boundary
- Existing Buildings
- Paved

Notes:
1. ft msl - feet (relative to) mean sea level
2. NU - Not used in contouring

N W E S

0 200 400 Feet

Figure 2-6
2009 Groundwater Elevation Map
Lower Surficial Aquifer
Marine Corps Air Station Cherry Point
Cherry Point, North Carolina

CH2MHILL

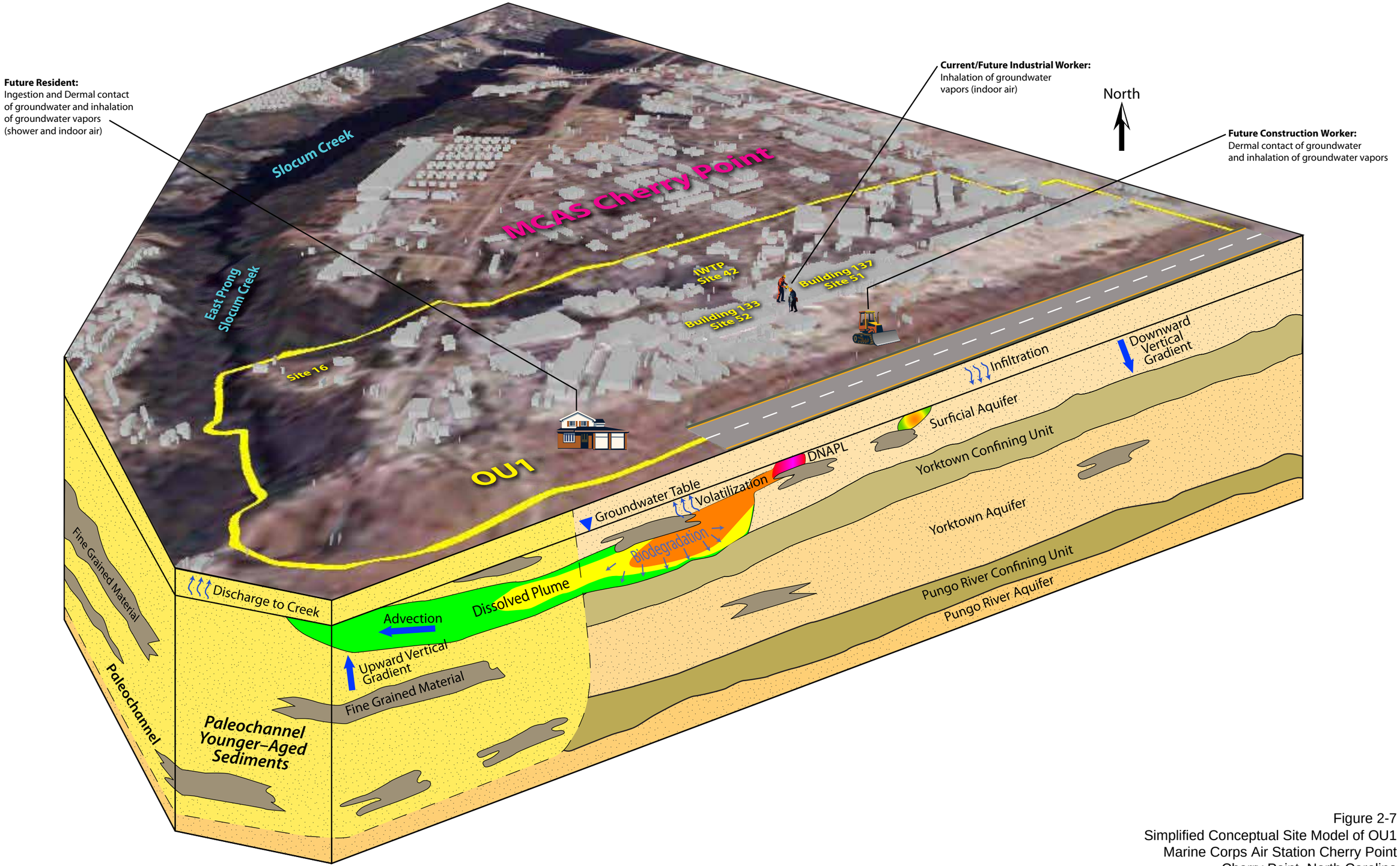

Figure 2-7
Simplified Conceptual Site Model of OU1
Marine Corps Air Station Cherry Point
Cherry Point, North Carolina

CH2MHILL

\\NORTHEND\PROJ\USNAVFACENGCOM\CHERRYPOINT\GIS_FOLDERS\MAPFILES\407558_OU1_PILOT_STUDY\SECTION2\FIGURE 2-8 - OPERABLE UNIT 1 PILOT STUDY LOCATION MAP.MXD CBOWMAN 9/28/2010 13:10:11

Legend

- Monitoring Well - Upper Surficial Aquifer
- Monitoring Well - Lower Surficial Aquifer
- Proposed Monitoring Well - Lower Surficial Aquifer
- Proposed Monitoring Well - Upper Surficial Aquifer
- Proposed Pilot Study Injection Well - Lower Surficial Aquifer
- Proposed Pilot Study Injection Well - Upper Surficial Aquifer
- Fire Hydrant
- Near Source In-Situ Enhanced Bioremediation Pilot Study Area
- Pilot Study Staging Area
- OU1 Boundary
- Site Boundary
- Existing Buildings
- Surface Water
- Industrial Area Sewer System

N S E

0 120 240 Feet

IWTP - Industrial Wastewater Treatment Plant

Figure 2-8
Pilot Study Area Location Map
Marine Corps Air Station Cherry Point
Cherry Point, North Carolina

CH2MHILL.

\\NORTHEND\PROJ\USNAVFACENGCOM\CHERRYPOINT\GIS_FOLDERS\MAPFILES\407558_OU1_PILOT_STUDY\SECTION2\FIGURE 2-9 - TCE - UPPER AQUIFER.MXD CBOWMAN 9/28/2010 12:45:24

Legend

- Extraction Well
- Monitoring Well - Upper Aquifer
- Surface Water
- OU1 Boundary
- Existing Buildings
- 3 - 30 µg/L
- 30 - 300 µg/L
- 300 - 3,000 µg/L
- 3,000 - 11,000 µg/L
- > 11,000 µg/L

IWTP - Industrial Wastewater Treatment Plant

Notes:
NC2L - North Carolina Groundwater Standard
NC2L = 3 µg/L (Jan 2010)
NU = Not Used
Concentrations are from the Spring 2009 sampling event
µg/L = micrograms per liter
U - analyte not detected above detection limit
J - concentration is estimated

N W E S

0 600 1,200 Feet

Figure 2-9
Trichloroethene (TCE) Isoconcentration Map
Upper Surficial Aquifer
Marine Corps Air Station Cherry Point
Cherry Point, North Carolina

CH2MHILL.

\\NORTHEND\PROJ\USNAVFACENGCOM\CHERRYPOINT\GIS_FOLDERS\MAPFILES\407558_OU1_PILOT_STUDY\SECTION2\FIGURE 2-10 - TCE - LOWER AQUIFER.MXD CBOWMAN 9/28/2010 12:46:55

Legend

- Extraction Well
- Monitoring Well - Lower Aquifer
- Surface Water
- OU1 Boundary
- Existing Buildings
- 3 - 30 µg/L
- 30 - 300 µg/L
- 300 - 3,000 µg/L

Notes:
NC2L - North Carolina Groundwater Standard
NC2L = 3 µg/L (Jan 2010)
NU = Not Used
Concentrations are from Spring 2009 sampling event
µg/L = micrograms per liter
U - analyte not detected above detection limit
J - concentration is estimated

N S E W

0 600 1,200 Feet

Figure 2-10
Trichloroethene (TCE) Isoconcentration Map
Lower Surficial Aquifer
Marine Corps Air Station Cherry Point
Cherry Point, North Carolina

CH2MHILL.

IWTP - Industrial Wastewater Treatment Plant

\\NORTHEND\PROJ\USNAVFACENGCOM\CHERRYPOINT\GIS_FOLDERS\MAPFILES\407558_OU1_PILOT_STUDY\SECTION2\FIGURE 2-11 - 1_2_DCE - UPPER AQUIFER.MXD CBOWMAN 9/28/2010 12:49:16

Legend

- Extraction Well
- Monitoring Well
- Surface Water
- OU1 Boundary
- Existing Buildings
- 70 - 700 µg/L
- 700 - 7,000 µg/L

Notes:
NC2L - North Carolina Groundwater Standard
NC2L = 70 µg/L (Jan 2010)
NU = Not Used
Concentrations are from the Spring 2009 sampling event
µg/L = micrograms per liter
U - analyte not detected above detection limit
J - concentration is estimated

N W E S

0 600 1,200 Feet

Figure 2-11
1,2-Dichloroethene (1,2-DCE) Isoconcentration Map
Upper Surficial Aquifer
Marine Corps Air Station Cherry Point
Cherry Point, North Carolina

CH2MHILL.

IWTP - Industrial Wastewater Treatment Plant

\\NORTHEND\PROJ\USNAVFACENGCOM\CHERRYPOINT\GIS_FOLDERS\MAPFILES\407558_OU1_PILOT_STUDY\SECTION2\FIGURE 2-12 - 1_2_DCE - LOWER AQUIFER.MXD CBOWMAN 9/28/2010 12:50:08

Legend

- Extraction Well
- Monitoring Well
- Surface Water
- OU1 Boundary
- Existing Buildings
- 70 - 700 µg/L
- 700 - 7,000 µg/L

Notes:
NC2L - North Carolina Groundwater Standard
NC2L = 70 µg/L (Jan 2010)
NU = Not Used
Concentrations are from the Spring 2009 sampling event
µg/L = micrograms per liter
U - analyte not detected above detection limit
J - concentration is estimated

N W E S

0 600 1,200 Feet

Figure 2-12
1,2-Dichloroethene (1,2-DCE) Isoconcentration Map
Lower Surficial Aquifer
Marine Corps Air Station Cherry Point
Cherry Point, North Carolina

CH2MHILL.

IWTP - Industrial Wastewater Treatment Plant

\\NORTHEND\PROJ\USNAVFACENGCOM\CHERRYPOINT\GIS_FOLDERS\MAPFILES\407558_OU1_PILOT_STUDY\SECTION2\FIGURE 2-13 - VC - UPPER AQUIFER.MXD CBOWMAN 9/28/2010 12:51:21

Legend

- Extraction Well
- Monitoring Well - Upper Aquifer
- Surface Water
- OU1 Boundary
- Existing Buildings
- 0.03 - 30 µg/L
- 30 - 300 µg/L
- 300 - 3,000 µg/L

Notes:
NC2L - North Carolina Groundwater Standard
NC2L = 0.03 µg/L (Jan 2010)
NU = Not Used
Concentrations are from the Spring 2009 sampling event
µg/L = micrograms per liter
U - analyte not detected above detection limit
J - concentration is estimated

N W E S

0 600 1,200 Feet

Figure 2-13
Vinyl Chloride Isoconcentration Map
Upper Surficial Aquifer
Marine Corps Air Station Cherry Point
Cherry Point, North Carolina

CH2MHILL.

IWTP - Industrial Wastewater Treatment Plant

\\NORTHEND\PROJ\USNAVFACENGCOM\CHERRYPOINT\GIS_FOLDERS\MAPFILES\407558_OU1_PILOT_STUDY\SECTION2\FIGURE 2-14 - VC - LOWER AQUIFER.MXD CBOWMAN 9/28/2010 12:52:12

Legend

- Extraction Well
- Monitoring Well - Lower Aquifer
- Surface Water
- OU1 Boundary
- Existing Buildings
- 0.03 - 30 µg/L
- 30 - 300 µg/L
- 300 - 3,000 µg/L

IWTP - Industrial Wastewater Treatment Plant

Notes:
NC2L - North Carolina Groundwater Standard
NC2L = 0.03 µg/L (Jan 2010)
NU = Not Used
Concentrations are from the Spring 2009 sampling event
µg/L = micrograms per liter
U - analyte not detected above detection limit
J - concentration is estimated

N W E S

0 600 1,200 Feet

Figure 2-14
Vinyl Chloride Isoconcentration Map
Lower Surficial Aquifer
Marine Corps Air Station Cherry Point
Cherry Point, North Carolina

CH2MHILL.

SECTION 3

Pilot Study Description

This section presents an overview of the pilot study, as well as objectives, goals, and methodology. The specific implementation plan for the pilot study is presented in Section 4.

3.1 Pilot Study Overview, Objectives, and Goals

3.1.1 Study Overview

The 2010 Draft FS identified near-source ISEB as a potentially viable treatment for TCE and its daughter products in groundwater within the Central Groundwater Plume at OU1 (CH2M HILL, 2010). The Partnering Team agreed in August 2010 to conduct an ISEB pilot study located just downgradient of the source area over a 2-year period.

Key tasks associated with the pilot study are summarized below.

- Installation and development of 14 injection wells (seven nested pairs, each consisting of one upper surficial and one lower surficial aquifer well).
- Installation and development of five monitoring wells (two upper surficial and three lower surficial aquifer wells).
- Baseline groundwater sampling (14 injection wells, five proposed monitoring wells, and two existing monitoring wells).
- Injection of reagents (i.e. emulsified vegetable oil [EVO] and a bioaugmentation culture).
- Post-injection performance monitoring by groundwater sampling and analysis (five proposed monitoring wells and two existing monitoring wells at 3 months, 6 months, 9 months, 12 months, and 24 months after injection).

3.1.2 Study Objectives and Goals

The purpose of the pilot study is to assess the potential effectiveness of the near-source ISEB barrier alternative and for potential optimization of full-scale implementation during a future remedial design of the permanent remedy. The goal of the pilot study is to achieve 90% reduction of TCE in the downgradient monitoring wells and 75% reduction of overall VOCs. However, it should be noted that because the barrier will be installed downgradient of the source area, concentrations are expected to rebound and geochemical parameters are expected to return to baseline (without additional substrate application).

New injection wells and new and existing monitoring wells within the pilot study area will be gauged and sampled prior to initiation of the pilot study. The resulting laboratory and analytical data and field geochemical data will be used to establish baseline conditions in the area. Subsequent data will be compared to baseline conditions to evaluate performance during the pilot study.

3.2 Technology Description

This section presents a brief technical overview of the methodology associated with the technology and the reagents selected for the OU1Central Groundwater Plume Near Source ISEB Pilot Study.

3.2.1 Enhanced Reductive Dechlorination

Enhanced reductive dechlorination (ERD) is a bioremediation technology used for treating chlorinated ethenes (PCE, TCE, cis-1,2-DCE, and VC) with the addition of organic compounds (electron donors) such as molasses, lactate, vegetable oil, and other commercially-available carbon sources. The ERD accelerates the naturally-occurring process of reductive dechlorination in two steps:

- Anaerobic microorganisms take electrons from the added ERD substrate and produce hydrogen (fermentation), depleting competing electron acceptors and creating strongly reducing conditions in the process.
- Dechlorinating microorganisms use the electrons in the hydrogen produced during fermentation of the ERD substrate to replace a chlorine atom with a hydrogen atom in the chlorinated ethenes.

These substrates also provide a carbon source for microbial growth, further stimulating dechlorination. The principal anaerobic biodegradation pathway for reductive dechlorination of chlorinated ethenes is:

$$\text{PCE} \rightarrow \text{TCE} \rightarrow \text{cis-1,2-DCE} \rightarrow \text{VC} \rightarrow \text{ethene}$$

The transformation rates for each step vary but tend to become slower with progress along the breakdown sequence, often resulting in accumulation of cis-1,2-DCE and VC. Further breakdown from cis-1,2-DCE and VC to ethene varies and is based on site-specific conditions.

For the pilot study, EVO combined with a bioaugmentation culture (dechlorinating microorganisms) for ERD will be used. These ERD substrates are discussed further below.

SRS™

Slow Release Emulsified Vegetable Oil Substrate (SRS™) is a common substrate utilized for ERD provided by Terra Systems, Inc. (Terra Systems). SRS™ degrades to fatty acids, which are then fermented to hydrogen, the electron donor required for reductive dechlorination. SRS™ contains mostly food-grade soy bean oil with some sodium lactate, emulsifiers, and a proprietary nutrient package containing nitrogen, phosphorus, and vitamin B12 (Terra Systems, 2006a). It is a combination of slow and fast release electron donors (soybean oil and sodium lactate, respectively), is overall relatively insoluble, and is designed to release bio-available hydrogen over a period of up to 3 to 5 years, depending on the applied dosage and site conditions (Terra Systems, 2006a). SRS™ has a low viscosity, which makes it more mobile, allowing for more uniform distribution in the aquifer.

No significant health and safety (H&S) concerns are associated with SRS™; however, it is recommended that eye protection and impervious gloves be donned during handling to avoid irritation.

Bioaugmentation

Bioaugmentation is the introduction of microorganisms into the subsurface for the treatment of contaminated soil or groundwater. Bioaugmentation is used to ensure that contaminants, particularly chlorinated ethenes, are completely degraded to the non-harmful end product ethene. The TSI-DC™ Bioaugmentation Culture, provided by Terra Systems, will be injected into the subsurface for the ERD pilot studies. TSI-DC™ is an enriched natural bacteria culture that contains *Dehalococcoides* species, the only known organisms capable of dechlorination of PCE to ethene (Terra Systems, 2006b). Without *Dehalococcoides*, dechlorination of PCE typically only progresses to cis-1,2-DCE. Bioaugmentation has been demonstrated to work with most commonly used electron donors, including lactate, vegetable oils, and slow-release compounds. Bioaugmentation can be inhibited by aerobic conditions, high sulfate concentrations, moderate concentrations of chloroform, and extremely low groundwater temperatures (SiREM, 2009).

3.2.2 Biobarrier Technology

A biobarrier is a technology that creates a subsurface (in-situ) zone of biological treatment of contaminants that are dissolved in groundwater. A typical biobarrier is oriented perpendicular to groundwater flow and relies on natural gradients to bring chlorinated ethenes into the treatment zone. Substrate injection within the biobarrier will promote ERD of chlorinated ethenes, thus reducing contaminant mass and limiting offsite migration.

The injection of bioenhancing substrate will be conducted through a string of 14 permanent injection wells (seven nested pairs, each consisting of one upper surficial constructed to a depth of 20 to 35 feet below ground surface (bgs) and one lower surficial aquifer well constructed to a depth of 35 to 50 feet bgs). Each pair of injection wells will be installed approximately 25 feet apart. The ERD injection wells will act as a plume remediation and treatment strategy, or biobarrier, and reduce the potential for migration of impacted groundwater into either East Prong Slocum Creek or Sandy Branch at concentrations that exceed the NC 2L. Due to site constraints, the biobarrier to be installed during the pilot study will be oriented at an offset of 45 degrees to the assumed westerly groundwater flow direction, from southwest to the northeast.

SECTION 4

Pilot Study Implementation

This section specifies the implementation plan for the OU1Central Groundwater Plume Near Source ISEB Pilot Study.

4.1 Site Preparation

4.1.1 Utility Location

Prior to initiating drilling activities, the North Carolina One Call Center (ULOCO) will be called to markout utilities. A record of each utility markout ticket will be retained to verify ULOCO was contacted.

CH2M HILL will coordinate with Base personnel and a professional utilities locating subcontractor to define all subsurface structures that could be impacted by drilling activity in the immediate area of the pilot studies. The private utility locator will be contracted to mark utilities within a 20-foot radius of each proposed well location. No drilling will be conducted unless a utility markout verification is identified and no subsurface utilities are present. A 3.5-inch diameter hand auger will also be required to clear each boring location to 5 feet bgs prior to drilling at each well location. Three hand auger locations must be advanced to 5 feet bgs in a triangular pattern with the drilling location centered in this triangulation. The preliminary well locations are shown on **Figure 4-1**; final locations will be determined based on results of subsurface structure/utility locations and other conditions encountered in the field. Locations of known subsurface utilities are shown on each figure.

4.1.2 Well Installation

All of the wells will be constructed and developed in accordance with the MCAS Cherry Point Master Field Sampling Plans (MFSPs) (AGVIQ/CH2M HILL, 2004a). For the installation of each proposed injection and monitoring well, cores will be logged for lithological characterization on a boring log and final well installation information will be indicated on a well construction diagram.

Injection Wells

Fourteen new 4-inch injection wells (OU1-52IW01 through OU1-52IW14) will be installed as nested pairs using rotosonic drilling techniques within the Near Source In-Situ Bioremediation Pilot Study Area as shown on **Figure 4-1** and as follows:

- 7 injection wells screened in the upper surficial aquifer (from 20 to 35 feet bgs)
- 7 injection wells screened in the lower surficial aquifer (from 35 to 50 feet bgs)

Proposed well construction details are provided in **Table 4-1**. Final well construction for targeted injection zones may be modified slightly in the field as site-specific geologic information becomes available upon lithological classification of soil cores.

The 14 injection wells will be installed in a biobarrier formation, parallel to A Street on the northwest side of the railroad tracks, with 25 feet between each nested well pair. Each injection well will be installed using a 15-foot section of 4-inch inner diameter (ID) 0.020-inch slot Vee-wire polyvinyl chloride (PVC) screen.

Monitoring Wells

To monitor for the effectiveness of ERD distribution into the subsurface, or the radius of influence (ROI), as well as ERD treatment effectiveness, five monitoring wells will be installed using rotosonic drilling techniques within the study area (OU1-52GW77 to OU1-52GW81), as shown on **Figure 4-1**. Proposed well construction details are provided in **Table 4-1**. Final well construction of screened interval may be modified slightly in the field as site-specific geologic information becomes available upon lithological classification of soil cores. The monitoring wells will be installed hydraulically downgradient, or west, of the injection well nested pairs at varying distances, to monitor for ROI, as follows:

- OU1-52GW77 – Upper Surficial Aquifer Monitoring Well – Located 15 feet downgradient of the OU1-52IW05/06 injection well pair
- OU1-52GW78 – Lower Surficial Aquifer Monitoring Well – Located 12 feet downgradient of the OU1-52IW07/08 injection well pair
- OU1-52GW79 – Lower Surficial Aquifer Monitoring Well – Located 15 feet downgradient of the OU1-52IW09/10 injection well pair
- OU1-52GW80 – Upper Surficial Aquifer Monitoring Well – Located 10 feet downgradient of the OU1-52IW09/10 injection well pair
- OU1-52GW81 – Lower Surficial Aquifer Monitoring Well – Located 10 feet downgradient of the OU1-52IW11/12 injection well pair

Each monitoring well will be installed using a 10-foot section of 2-inch ID 0.010-inch slot PVC screen to be centered along the screened interval of the closest injection well. **Table 4-1** includes the proposed screened intervals of each monitoring and injection well.

Survey

Following well installation, the new injection and monitoring wells will be surveyed. The surveyor will provide coordinates of all horizontal and vertical points to the nearest 0.01 foot (0.1 foot for unpaved ground surfaces). Coordinates will be provided in the appropriate State Plane Coordinate System (SPCS) and zone (latest adjustment) for the area. The horizontal and vertical datum(s) will be the North American Datum (NAD) 83 (latest adjustment) for the horizontal and North American Vertical Datum (NAVD) 88 for the vertical.

4.2 Groundwater Gauging

Following installation, all newly installed injection and monitoring wells and will be gauged for depth to groundwater and depth to bottom. Existing wells 16GW11 and MW53 will be gauged also.

4.3 Baseline Groundwater Monitoring

Prior to injections, groundwater samples will be collected for the baseline groundwater sampling event from the five newly-installed monitoring wells (OU1-52GW77 to OU1-52GW81), 14 newly-installed injection wells (OU1-52IW01 through OU1-52IW14), and 2 existing monitoring wells (16GW11, screened in the upper surficial aquifer and MW53, screened in the lower surficial aquifer), as shown on **Figure 4-1**. The injection wells will not be sampled after this initial baseline groundwater sampling event. The groundwater sample analyses parameters that will be measured during each sampling event are listed in **Table 4-1**. **Tables 4-2** and **4-3** provide a breakdown of which sample analyses will be conducted for each sample location during groundwater monitoring events, including QA/QC samples. All sample handling and analysis will be conducted in accordance with the Master Quality Assurance Plan (AGVIQ/CH2M HILL, 2004b). Additionally, injection of the EVO and bioaugmentation culture will be conducted only in concurrence with the NCDENR-Division of Water Quality, Underground Injection Control Program, Aquifer Protection Section.

4.4 Injections

4.4.1 Injection Equipment

A piping and instrumentation diagram (P&ID) for the pilot study ERD injection trailer is shown on **Figure 4-2**. SRS™ will be supplied in a tank, which will be staged onsite. Water will be obtained from a fire hydrant located approximately 120 feet north of the pilot study area, as shown on **Figure 4-1**. The fire hydrant will be equipped with a backflow preventer. The water will be pumped to a 300-gallon tank equipped with a recirculation pump. A substrate metering device, or Dosatron, will pump the SRS™ out of the poly tank and meter it into water from the fire hydrant that is flowing through the piping on the injection trailer. The solution will then be pumped into the injection wells through a series of hoses connected to an injection manifold. Each manifold leg will include a flow meter and pressure gauge.

4.4.2 ERD Substrate Injection

Recommended ERD substrate dosages have been based on oil retention, often in the range of 0.002-0.004 grams of product per gram of dry soil (g/g) (for an SRS™ product containing 60 percent oil), depending on soil type. A dosage estimation of 0.002 g/g dry soil was used for the SRS™ dosage estimation for this pilot study. This resulted in approximately 1,694 pounds of SRS™ per injection well. To achieve a 12.5-foot ROI, approximately 220 gallons of SRS™ will be mixed with approximately 8,050 gallons of water to achieve 8,270 gallons of a 2.66 percent (24,541 mg/L) solution of SRS™, to be injected into each of the 14 injection wells at a rate of 5 to 10 gallons per minute (gpm).

Two weeks following the SRS™ injection, Terra Systems, Inc. will perform the TSI-DC™ bioaugmentation injections. Approximately 14.0 liters, or 1.0 liter per injection well, of a 5 x 10^{10} cells per liter (cells/L) microorganism solution will be injected with 1,000 gallons of anaerobic chase water per well. The anaerobic chase water will be generated onsite by dosing with 0.0066 pounds per gallon of sodium sulfite to remove the oxygen and reduce the ORP to less than 0 millivolts (mV).

Groundwater parameters, including ORP and conductivity, will be monitored in select monitoring wells during injections using downhole water quality meters.

4.5 Post-Injection Groundwater Monitoring

Groundwater samples will be collected from the pilot study area to monitor the effectiveness of the injections. Groundwater monitoring will be conducted after 3, 6, 9, 12, and 24 months following completion of injections. Groundwater sampling will be conducted in accordance with the OU1 UFP-SAP, which will be issued under separate cover.

Post-injection groundwater samples will be collected from the five newly installed monitoring wells (OU1-52GW77 to OU1-52GW81) and two existing monitoring wells (16GW11, screened in the upper surficial aquifer and MW53, screened in the lower surficial aquifer), as shown on **Figure 4-1.** The injection wells will not be sampled after the initial baseline groundwater sampling event. The groundwater sample analyses parameters that will be measured are listed in **Table 4-1**. **Tables 4-2** and **4-3** provide a breakdown of which sample analyses will be conducted for each sample location during groundwater monitoring events, including QA/QC samples. All sample handling and analysis will be conducted in accordance with the Master Quality Assurance Plan (AGVIQ/CH2M HILL, 2004b).

TABLE 4-1
Well Construction Details
Marine Corps Air Station Cherry Point
Cherry Point, North Carolina

Pilot Study	Well	Surficial Aquifer Zone	Total Well Depth (ft bgs)	Screen[a,b] Length (ft)	Screen Interval (ft bgs)
Injection Well Pairs	OU1-52IW01	Upper	35	15	20 - 35
	OU1-52IW02	Lower	50	15	35 - 50
	OU1-52IW03	Upper	35	15	20 - 35
	OU1-52IW04	Lower	50	15	35 - 50
	OU1-52IW05	Upper	35	15	20 - 35
	OU1-52IW06	Lower	50	15	35 - 50
	OU1-52IW07	Upper	35	15	20 - 35
	OU1-52IW08	Lower	50	15	35 - 50
	OU1-52IW09	Upper	35	15	20 - 35
	OU1-52IW10	Lower	50	15	35 - 50
	OU1-52IW11	Upper	35	15	20 - 35
	OU1-52IW12	Lower	50	15	35 - 50
	OU1-52IW13	Upper	35	15	20 - 35
	OU1-52IW14	Lower	50	15	35 - 50
Proposed Monitoring Wells	OU1-52MW77	Upper	32	10	22 - 32
	OU1-52MW78	Lower	48	10	38 - 48
	OU1-52MW79	Lower	48	10	38 - 48
	OU1-52MW80	Upper	32	10	22 - 32
	OU1-52MW81	Lower	48	10	38 - 48
Existing Monitoring Wells	16GW11	Upper	27	15	12 - 27
	MW53	Lower	54	10	44 - 54

Notes:
ft - feet
ft bgs - feet below ground surface
[a] 4-inch diameter with 0.020-inch slot Vee-wire Schedule (Sch.) 40 PVC screen for injection wells
[b] 2-inch diameter 0.010-inch machine slot Sch. 40 PVC screen for monitoring wells

TABLE 4-2
Groundwater Sample Strategy
Marine Corps Air Station Cherry Point
Cherry Point, North Carolina

Analytical Group	Analyte	Method	Containers (number, size, and type)	Preservation Requirements (chemical, temperature, light-protected)	Maximum Holding Time (preparation/analysis)
VOCs	1,1,1-Trichloroethane (1,1,1-TCA)	USEPA Method 8260B	(3) 40 mL VOA Vial	HCl, pH < 2, (4 ± 2) ° C, no headspace	14 days
	1,1,2,2-Tetrachloroethane (1,1,2,2-PCA)				
	1,1,2-Trichloro-1,2,2-trifluoroethane (Freon-113)				
	1,1,2-Trichloroethane (1,1,2-TCA)				
	1,1-Dichloroethane (1,1-DCA)				
	1,1-Dichloroethene (1,1-DCE)				
	1,2-Dichloroethane (1,2-DCA)				
	cis-1,2-Dichloroethene (cis-1,2-DCE)				
	trans-1,2-Dichloroethene (trans-1,2-DCE)				
	Bromodichloromethane				
	Bromoform				
	Chloromethane				
	Dichlorodifluoromethane (Freon-12)				
	Methylene Chloride				
	Tetrachloroethene (PCE)				
	Trichloroethene (TCE)				
	Vinyl chloride				
NAIPs - Analytical Lab	Sulfate	USEPA Method 375.4	(1) 250 mL	(4 ± 2) ° C	28 days
	Sulfide	USEPA Method SM4500S2-E	(1) 500 mL	1 mL 2N ZnAc/L & NaOH, (4 ± 2) ° C	7 Days
	Methane/Ethene/Ethane	EPA Method RSK-175	(2) 40 mL VOA Vial	HCl, pH <2, (4 ± 2) ° C, no headspace	14 Days
	Total Organic Carbon (TOC)	USEPA Method 9060A	(2) 40 mL VOA Vial	pH <2 with H2SO4, (4 ± 2) ° C	28 days
	Volatile Fatty Acids (VFA)	AM23G	(2) 40ml vials	Benzalkonium chloride ice to 4C	14 days
	Microbial Analysis for Dehalococcoides spp.(1) and functional genes	qPCR/DNA-qPCR	1 L	cool to 4 ± 2° C	24-48 hours to extraction, 1 year to analysis (frozen at -20°C)
NAIPs - Field Analysis	DO	HACH field kit and Water Quality Meter	NA	NA	NA
	Ferrous Iron	HACH field kit	NA	NA	NA
	Temperature	Water Quality Meter	NA	NA	NA
	pH	Water Quality Meter	NA	NA	NA
	Conductivity	Water Quality Meter	NA	NA	NA
	ORP	Water Quality Meter	NA	NA	NA
	Turbidity	Turbidity Meter	NA	NA	NA

Notes:
- Table adapted from Worksheet #19-Analytical SOP Requirements Table in UFP-SAP
- NAIPs - Field Analysis - To be completed in field at time of sampling, following all groundwater sampling procedures

NA - Not applicable, field method
NAIPS - natural attenuation indication parameters
VOCs - volatile organic compounds

TABLE 4-3
Sample Summary
Marine Corps Air Station Cherry Point
Cherry Point, North Carolina

Site	Well ID/Sample Location	Analyses						QA/QC															
								Dup				MS/MSD				FB				EB			
		VOCs[1]	Sulfate/ sulfide[2]	TOC[3]	VFAs[4]	Microbial[5]	DO and Ferrous Iron[6]	VOCs[1]	Sulfate/ sulfide[2]	TOC[3]	VFAs[4]	VOCs[1]	Sulfate/ sulfide[2]	TOC[3]	VFAs[4]	VOCs[1]	Sulfate/ sulfide[2]	TOC[3]	VFAs[4]	VOCs[1]	Sulfate/ sulfide[2]	TOC[3]	VFAs[4]
Injection Wells[†]	OU1-52IW01	X					X	--	--	--	--	--	--	--	--								
	OU1-52IW02	X					X	--	--	--	--	--	--	--	--								
	OU1-52IW03	X					X	--	--	--	--	--	--	--	--								
	OU1-52IW04	X					X	--	--	--	--	--	--	--	--								
	OU1-52IW05	X					X	--	--	--	--	--	--	--	--								
	OU1-52IW06	X					X	--	--	--	--	--	--	--	--								
	OU1-52IW07	X					X	--	--	--	--	--	--	--	--								
	OU1-52IW08	X					X	--	--	--	--	--	--	--	--								
	OU1-52IW09	X					X	--	--	--	--	--	--	--	--								
	OU1-52IW10	X					X	--	--	--	--	--	--	--	--								
	OU1-52IW11	X					X	--	--	--	--	--	--	--	--	X	X	X	X	X	X	X	X
	OU1-52IW12	X					X	--	--	--	--	--	--	--	--								
	OU1-52IW13	X					X	--	--	--	--	--	--	--	--								
	OU1-52IW14	X					X	--	--	--	--	--	--	--	--								
Proposed Monitoring Wells	OU1-52MW77	X	X	X	X	X	X	X	X	X	X	--	--	--	--								
	OU1-52MW78	X	X	X	X	X	X	--	--	--	--	X	X	X	X								
	OU1-52MW79	X	X	X	X	X	X	--	--	--	--	--	--	--	--								
	OU1-52MW80	X	X	X	X	X	X	--	--	--	--	--	--	--	--								
	OU1-52MW81	X	X	X	X	X	X	--	--	--	--	--	--	--	--								
Existing Monitoring Wells	16GW11	X	X	X	X	X	X	--	--	--	--	--	--	--	--								
	MW53	X	X	X	X	X	X	--	--	--	--	--	--	--	--								
	Totals:	21	7	7	7	7	21	1	1	1	1	1	1	1	1	1	1	1	1	1	1	1	1

Notes:
[1]Select VOCs: (contaminants of concern [COCs] only) (USEPA Method 8260B)
[2]Sulfate/sulfide (USEPA Method 375.4/SM4500S2-E)
[3]Total Organic Carbon (TOC) (USEPA Method 9060A)
[4]Volatile Fatty Acids (VFA) (Method AM23G)
[5]Microbial Analysis for Dehalococcoides spp.(1) (qPCR/DNA-qPCR)
[6]Dissolved oxygen (DO) and ferrous Iron (using a HACH field kit)
*Trip Blank required in each cooler containing samples with VOCs
[†]Injection Wells will be monitored for VOCs, DO, and Ferrous Iron only during the baseline sampling event

Baseline Event		Quarterly Monitoring Events	
VOC Bottles	25	VOC Bottles	11
Sulfate Bottles	11	Sulfate Bottles	11
Sulfide Bottles	11	Sulfide Bottles	11
TOC Bottles	11	TOC Bottles	11
VFA Bottles	11	VFA Bottles	11
Microbial Sample Kits	7	Microbial Sample Kits	7

\\NORTHEND\PROJ\USNAVFACENGCOM\CHERRYPOINT\GIS_FOLDERS\MAPFILES\407558_OU1_PILOT_STUDY\FIGURE 4-1 - PROPOSED NEAR SOURCE IN-SITU BIOREMEDIATION PILOT STUDY AREA_LABELS.MXD CBOWMAN 7/28/2010 12:10:33

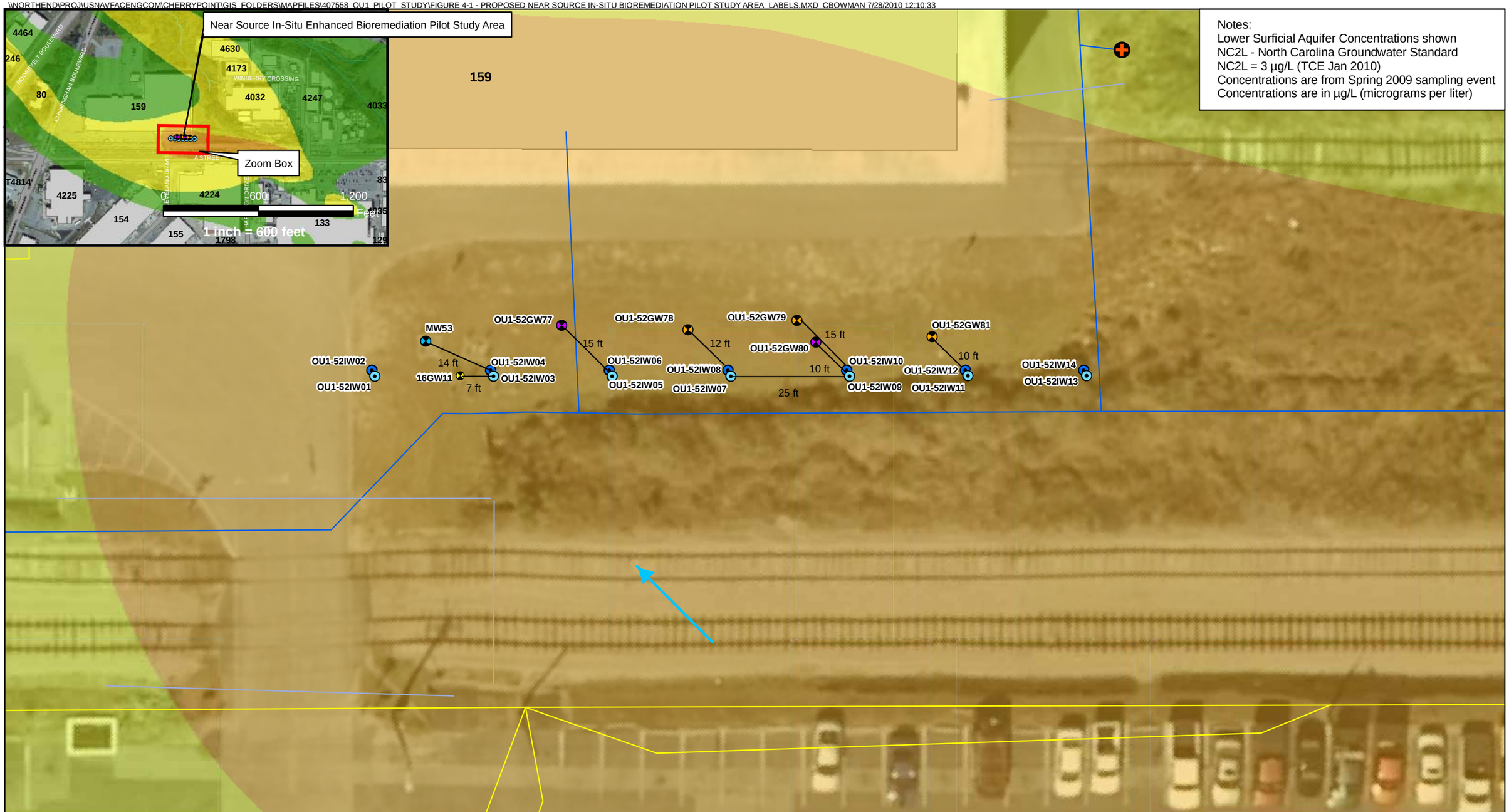

Legend

- Proposed Monitoring Well - Lower Surficial Aquifer
- Proposed Monitoring Well - Upper Surficial Aquifer
- Proposed Pilot Study Injection Well - Lower Surficial Aquifer
- Proposed Pilot Study Injection Well - Upper Surficial Aquifer
- Monitoring Well - Upper Surficial Aquifer
- Monitoring Well - Lower Surficial Aquifer
- Fire Connect
- Fire Hydrant
- Electrical Cable Line
- Industrial Waste Line
- Storm Sewer Line
- Water Line
- Assumed Groundwater Flow Direction
- 3 - 30 µg/L
- 30 - 300 µg/L
- 300 - 3,000 µg/L
- Existing Buildings

N W E S

0 20 40 Feet

1 inch = 20 feet

Figure 4-1
Proposed Pilot Study Wells
Marine Corps Air Station Cherry Point
Cherry Point, North Carolina

CH2MHILL.

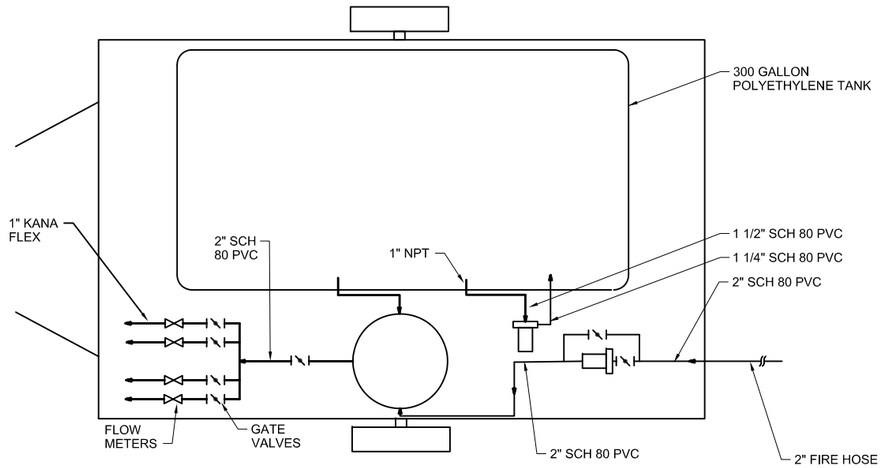

P & ID (PLAN VIEW)

1"=1'-0"

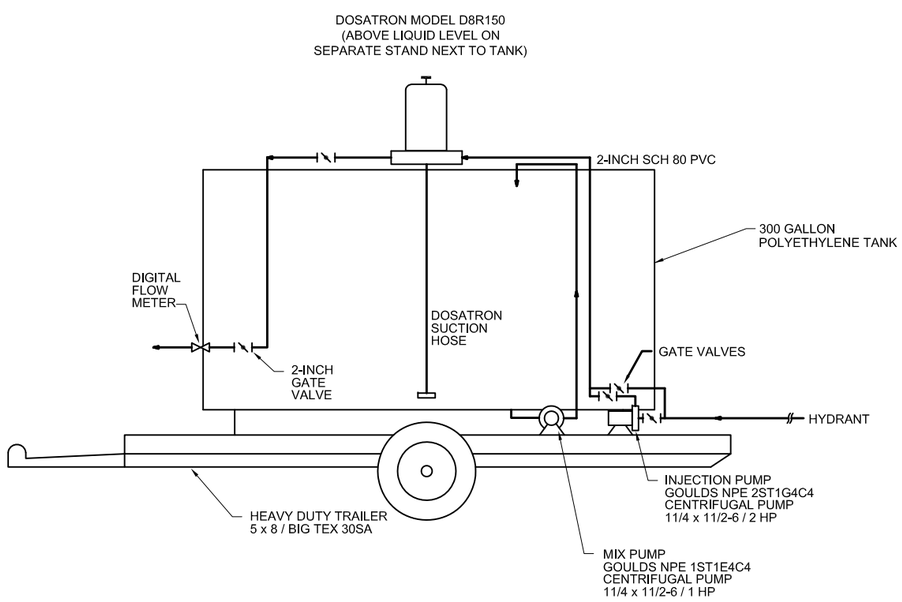

INJECTION SYSTEM DETAIL (PROFILE)

1"=1'-0"

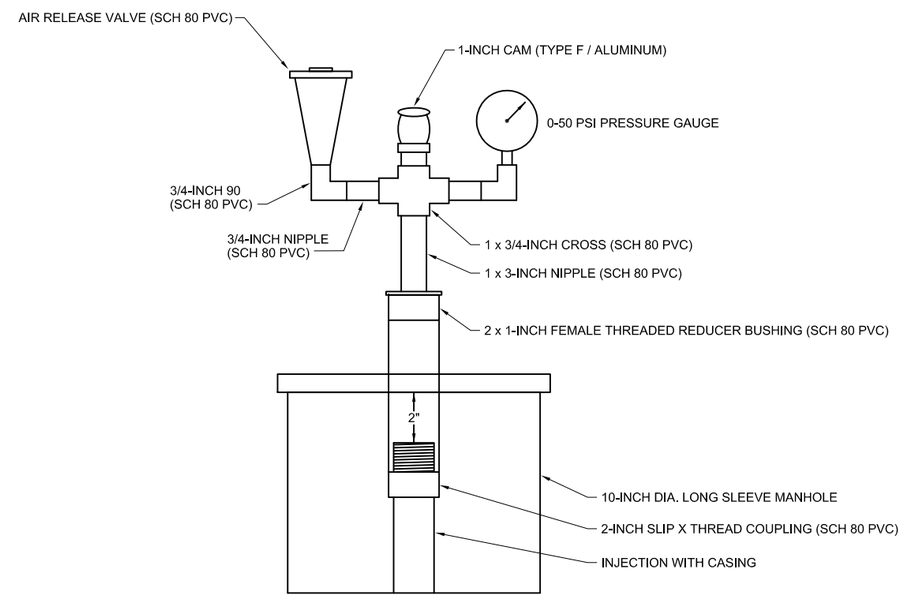

WELL HEAD DETAIL

1/4"=1'-0"

Figure 4-2
Substrate Injection P & ID and Details
Marine Corps Air Station Cherry Point
Cherry Point, North Carolina

CH2MHILL

DRAWN BY: G. Hartley
CHECKED BY: J. High

Ariadne\Proj\CLEANII\BASES\Cherry Point\OU1\Reports\Biobarrier Pilot Study\Work Plan\Figures\CADD

SECTION 5

Health and Safety and Residuals Management

5.1 Health and Safety

A HSP will be prepared in accordance with 29CFR1910 and 29CFR1926. The HSP will address the potential hazards associated with the field activities and pilot studies. Subcontractors are responsible for H&S procedures specific to their particular work components and are required to develop and submit an Activity Hazard Analysis to CH2M HILL for review prior to the start of field work. Subcontractors must comply with the established HSP, and CH2M HILL will monitor and enforce compliance with the established HSP.

5.2 General Safety

All personnel involved with the injections will undergo training on chemical handling and proper operation of the mixing/injection equipment. The training will also cover personal protective equipment (PPE) and spill response measures. Only trained personnel will be allowed to operate mixing and injection equipment or to respond to spills.

5.3 Residuals Management

Wastes generated during the investigation of potentially contaminated sites are classified as IDW and will be managed to protect the public and the environment. The MFSP provides general information for the characterization, handling, and disposal of contaminated wastes expected to be encountered or generated during this work (AGVIQ/CH2M HILL, 2004a).

5.3.1 Waste Streams

The waste streams associated with this project may include:

- Soil cuttings from the installation of injection and monitoring wells
- Equipment and personnel decontamination fluid
- Development/purge water from the monitoring wells
- PPE
- Used sampling supplies
- Uncontaminated general debris

5.3.2 Waste Management

All IDW management actions will be documented in the field notes. Specific waste management procedures are documented in the MFSP (AGVIQ/CH2M HILL, 2004a). The Field Team Leader (FTL) will coordinate and oversee placement of IDW.

Decontamination Fluids/Development Water

Decontamination fluids and development water from the monitoring wells will be collected in bulk containers that will be provided by the drilling subcontractor and/or CH2M HILL.

All water generated will be containerized for characterization and subsequent disposal at the IWTP. The IWTP is located near the center of OU1, north of A Street. The CH2M HILL FTL will coordinate the transportation of all IDW fluids to the IWTP for disposal. A CH2M HILL representative will provide oversight when transferring IDW fluids to the IWTP. Adequate time will be allotted to allow for any solids to settle from the fluids prior to discharging to the wet well at the IWTP.

Soil Cuttings

Soil cuttings will be containerized in drums. The drilling subcontractor will move the drums to a temporary storage area designated by MCAS Cherry Point personnel. Appropriate emergency response equipment should be available in case of fires or spills. This equipment may include a fire extinguisher, spill response equipment, and appropriate PPE depending on the waste being staged.

Soil IDW is expected to be characterized as non-hazardous. However, if soil IDW is characterized as hazardous, then the drums will be marked with pre-printed hazardous waste labels that include the following information: accumulation start date, generator name, USEPA identification number, applicable waste codes, and the manifest number. Hazardous wastes will be segregated from non-hazardous wastes. Additionally, incompatible wastes (e.g., flammable and corrosive wastes) will be segregated. Wastes of the same matrix, contamination, and the same source may be aggregated to facilitate storage and disposal.

All IDW drums will be moved by a licensed waste transporter. Within 90 days from the accumulation start date, the soil will be transported offsite for disposal at a properly permitted Resource Conservation and Recovery Act (RCRA) Subtitle C treatment, storage, or disposal (TSD) facility.

PPE, Used Sampling Supplies, and General Debris

PPE and used sampling supplies associated with the generation of non-hazardous wastes and general debris will be collected in black, non-translucent trash bags and disposed of in an ordinary refuse dumpster aboard MCAS Cherry Point.

5.3.3 Container Labels

Labels will include the type of waste, location of where the waste was generated, and accumulation start date. Labels must be legible and readable at all times. Faded labels will be rewritten or replaced. Each container will have one of the following labels:

- "Analysis Pending" - Temporary or handwritten label used until analytical results are received and reviewed. If handwritten, a paint pen will be used. This label will include the following:
  - Accumulation Start Date: The date that waste first entered the container
  - Type of waste (e.g., IDW soil)
  - Site
  - The words "CERCLA-derived, Analysis Pending"
  - Generator Name: Mr. Will Potter, MCAS Cherry Point [Environmental Affairs Department (EAD) field office]

- "Hazardous Waste" - Pre-printed hazardous waste labels with the following information:
  - Accumulation start date: The date that waste first entered the container
  - Generator Name: Mr. Will Potter or Jeff Christopher, MCAS Cherry Point [Environmental Affairs Department (EAD) field office]
  - Hazardous Waste Generator Number (NC 1170027261)
  - Waste codes
  - Prior to transport, the manifest number must be added (for containers of less than 110-gallon capacity)
- "Non-Hazardous Waste" - Preprinted labels (if handwritten paint pen is required) with the following information:
  - Accumulation start date: The date that waste first entered the container
  - Generator name: Mr. Will Potter, MCAS Cherry Point EAD field office
  - The words "CERCLA-derived"
  - Waste-specific information (e.g., IDW soil)

Where applicable, the major hazards (e.g., flammable, oxidizer, and carcinogen) will be included on the label.

It is expected that the required labels will be the "Analysis Pending" and/or the "Non-Hazardous Waste" label.

SECTION 6

Site Activity Considerations

The pilot study will be conducted within a congested area of the Base, within close proximity to the flightline. Care will be taken to minimize disturbance of surrounding operations. Considerations related to implementing the pilot study at OU1 include, but are not limited to, the following:

1. Equipment, space, and utility requirements:
    - Subcontractors will be solely responsible for their equipment, instrumentation, materials, and supplies.
    - Drilling subcontractor will be responsible for providing an equipment and materials storage area during the well installation phase.
    - Underground utilities will be identified by a professional utilities locating subcontractor.
2. Site security:
    - During working hours, CH2M HILL personnel will secure the work area.
    - Site access during the project will be limited to authorized personnel only.
    - During non-working hours, the work area will be secured by temporary construction fencing to prevent trespasser access.
    - No personnel, CH2M HILL or subcontracted, are to have cell phones or cameras within a portion of the pilot study area (i.e., within the Fleet Readiness Center East). Two-way radios will be required for communication within this area.

SECTION 7

Reporting

A pilot study completion report will be prepared following installation of the new monitoring and injection wells and after substrate injections and surveying activities are completed. Pre-mobilization activities (Section 4.1) and field activities will be summarized, and boring logs, well construction details, ERD substrate injection records, official survey data, and an overview of baseline sampling activities will be presented. A baseline sampling results report will prepared once analytical data from the procured lab is returned and validated. Quarterly groundwater monitoring results will be conducted and presented in four quarterly reports to evaluate the on-going progress of the pilot study at 3, 6, 9, and 12 months following completion of injections. A final groundwater sampling event will be conducted to evaluate the long-term effectiveness of the pilot study and the results will be presented in a pilot study summary report after 24 months. After a comment period for each draft report, any comments received will be addressed in the respective final report.

The results of the pilot studies will then be used for potential optimization of full-scale implementation during remedial design.

SECTION 8

Project Management

8.1 Project Schedule

The proposed schedule for implementing the Near Source ISEB Pilot Study at OU1 is presented on **Figure 8-1**. The tasks shown on the schedule correspond to the tasks identified in this Implementation Plan.

8.2 Project Organization

The project organization is presented on **Figure 8-2**. The Partnering Team includes representatives from CH2M HILL, NAVFAC, MCAS Cherry Point, NCDENR, and USEPA Region 4.

Ms. Keri Hallberg, P.E., will serve as the Project Manager (PM) for the pilot study. The PM is responsible for overall project management and the overall quality assurance/quality control (QA/QC) of project deliverables.

Mr. Dean Williamson, P.E. will serve as the Technical Consultant for the pilot study. He will work with the PM to ensure the quality of project execution and will review the technical aspects of the work from project scoping to project completion.

Other members of the project team include:

- Project Engineer/Hydrogeologist
- FTL
- Field support staff
- Technical project staff

All field and subcontractor activity will be under the direction of the FTL.

ID	Task Name	Duration	Start	Finish
1	**Cherry Point OU1 Pilot Study (ERD Bio-Barrier)**	**785 days**	**Mon 6/28/10**	**Fri 6/28/13**
2	**UFP-SAP**	**190 days**	**Mon 6/28/10**	**Fri 3/18/11**
3	Draft	47 days	Mon 6/28/10	Tue 8/31/10
4	Pre-Partnering Scoping Session	10 days	Mon 7/19/10	Fri 7/30/10
5	Revise Draft	10 days	Mon 1/24/11	Fri 2/4/11
6	Regulatory Review	23 days	Mon 2/7/11	Wed 3/9/11
7	Response to Comments	3 days	Thu 3/10/11	Mon 3/14/11
8	Finalize UFP-SAP	2 days	Tue 3/15/11	Wed 3/16/11
9	Sumbit Final UFP-SAP	2 days	Thu 3/17/11	Fri 3/18/11
10	**Field Work**	**625 days**	**Mon 2/7/11**	**Fri 6/28/13**
11	Pilot Study Plan and UIC Permit Approval	65 days	Mon 2/7/11	Fri 5/6/11
12	**First Field Event**	**35 days**	**Mon 5/9/11**	**Fri 6/24/11**
13	Utility Locating	2 days	Mon 5/9/11	Tue 5/10/11
14	Monitoring well installation	15 days	Wed 5/11/11	Tue 5/31/11
15	Groundwater Sampling & Surveying	5 days	Wed 6/1/11	Tue 6/7/11
16	Injections	13 days	Wed 6/8/11	Fri 6/24/11
17	**2nd Field Event**	**5 days**	**Mon 9/19/11**	**Fri 9/23/11**
18	Groundwater Sampling (3 month)	5 days	Mon 9/19/11	Fri 9/23/11
19	**3rd Field Event**	**5 days**	**Mon 12/19/11**	**Fri 12/23/11**
20	Groundwater Sampling (6 month)	5 days	Mon 12/19/11	Fri 12/23/11
21	**4th Field Event**	**5 days**	**Mon 3/19/12**	**Fri 3/23/12**
22	Groundwater Sampling (9 month)	5 days	Mon 3/19/12	Fri 3/23/12
23	**5th Field Event**	**5 days**	**Mon 6/25/12**	**Fri 6/29/12**
24	Groundwater Sampling (12 month)	5 days	Mon 6/25/12	Fri 6/29/12
25	**6th Field Event**	**5 days**	**Mon 6/24/13**	**Fri 6/28/13**
26	Groundwater Sampling (24 month)	5 days	Mon 6/24/13	Fri 6/28/13
27	**Reporting**	**390 days**	**Mon 6/27/11**	**Fri 12/21/12**
28	**Pilot Study Implementation Report**	**145 days**	**Mon 6/27/11**	**Fri 1/13/12**
29	Draft	30 days	Mon 6/27/11	Fri 8/5/11
30	Client Review	15 days	Mon 8/8/11	Fri 8/26/11
31	Response to Comments	15 days	Mon 8/29/11	Fri 9/16/11
32	Draft Final	15 days	Mon 9/19/11	Fri 10/7/11
33	Regulatory Review	25 days	Mon 10/10/11	Fri 11/11/11
34	Response to Comments	25 days	Mon 11/14/11	Fri 12/16/11
35	Finalize Report	20 days	Mon 12/19/11	Fri 1/13/12
36	**1st Quaterly Report**	**105 days**	**Mon 10/24/11**	**Fri 3/16/12**
37	Draft	30 days	Mon 10/24/11	Fri 12/2/11
38	Client Review	15 days	Mon 12/5/11	Fri 12/23/11
39	Draft Final	15 days	Mon 12/26/11	Fri 1/13/12
40	Regulatory Review	25 days	Mon 1/16/12	Fri 2/17/12
41	Response to Comments	20 days	Mon 2/20/12	Fri 3/16/12
42	Submit Final Report	0 days	Fri 3/16/12	Fri 3/16/12
43	**2nd Quarterly Report**	**105 days**	**Mon 1/23/12**	**Fri 6/15/12**
44	Draft	30 days	Mon 1/23/12	Fri 3/2/12
45	Client Review	15 days	Mon 3/5/12	Fri 3/23/12
46	Draft Final	15 days	Mon 3/26/12	Fri 4/13/12
47	Regulatory Review	25 days	Mon 4/16/12	Fri 5/18/12
48	Response to Comments	20 days	Mon 5/21/12	Fri 6/15/12
49	Submit Final Report	0 days	Fri 6/15/12	Fri 6/15/12
50	**3rd Quarterly Report**	**105 days**	**Mon 4/30/12**	**Fri 9/21/12**
51	Draft	30 days	Mon 4/30/12	Fri 6/8/12
52	Client Review	15 days	Mon 6/11/12	Fri 6/29/12
53	Draft Final	15 days	Mon 7/2/12	Fri 7/20/12
54	Regulatory Review	25 days	Mon 7/23/12	Fri 8/24/12
55	Response to Comments	20 days	Mon 8/27/12	Fri 9/21/12
56	Submit Final Report	0 days	Fri 9/21/12	Fri 9/21/12
57	**4th Quarterly Report**	**105 days**	**Mon 7/30/12**	**Fri 12/21/12**
58	Draft	30 days	Mon 7/30/12	Fri 9/7/12
59	Client Review	15 days	Mon 9/10/12	Fri 9/28/12
60	Draft Final	15 days	Mon 10/1/12	Fri 10/19/12
61	Regulatory Review	25 days	Mon 10/22/12	Fri 11/23/12
62	Response to Comments	20 days	Mon 11/26/12	Fri 12/21/12
63	Submit Final Report	0 days	Fri 12/21/12	Fri 12/21/12

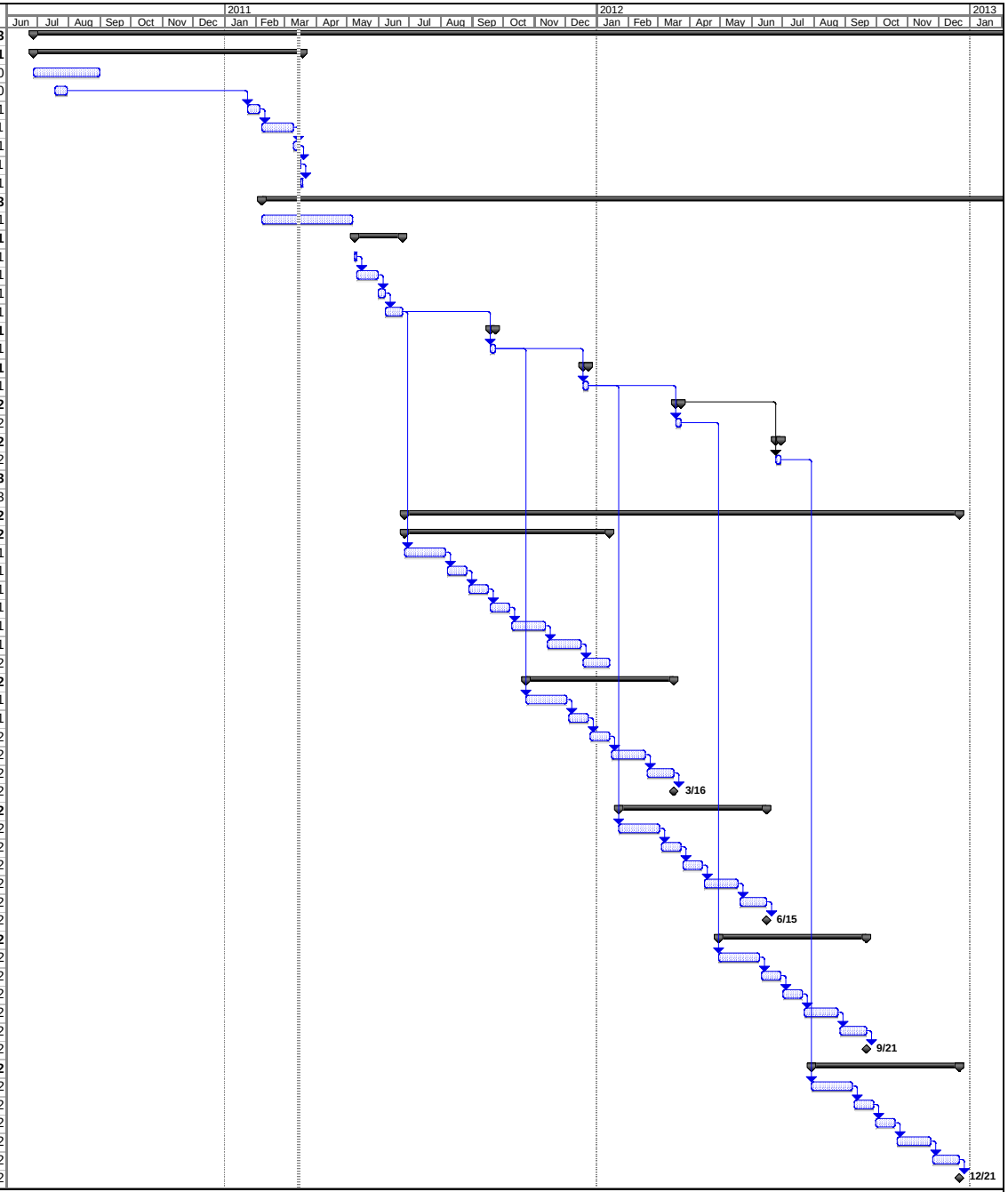

Task | Progress | Summary | External Tasks | Deadline
Split | Milestone | Project Summary | External Milestone

Figure 8-1
CTO 144 Project Schedule
Marine Corps Air Station Cherry Point, NC

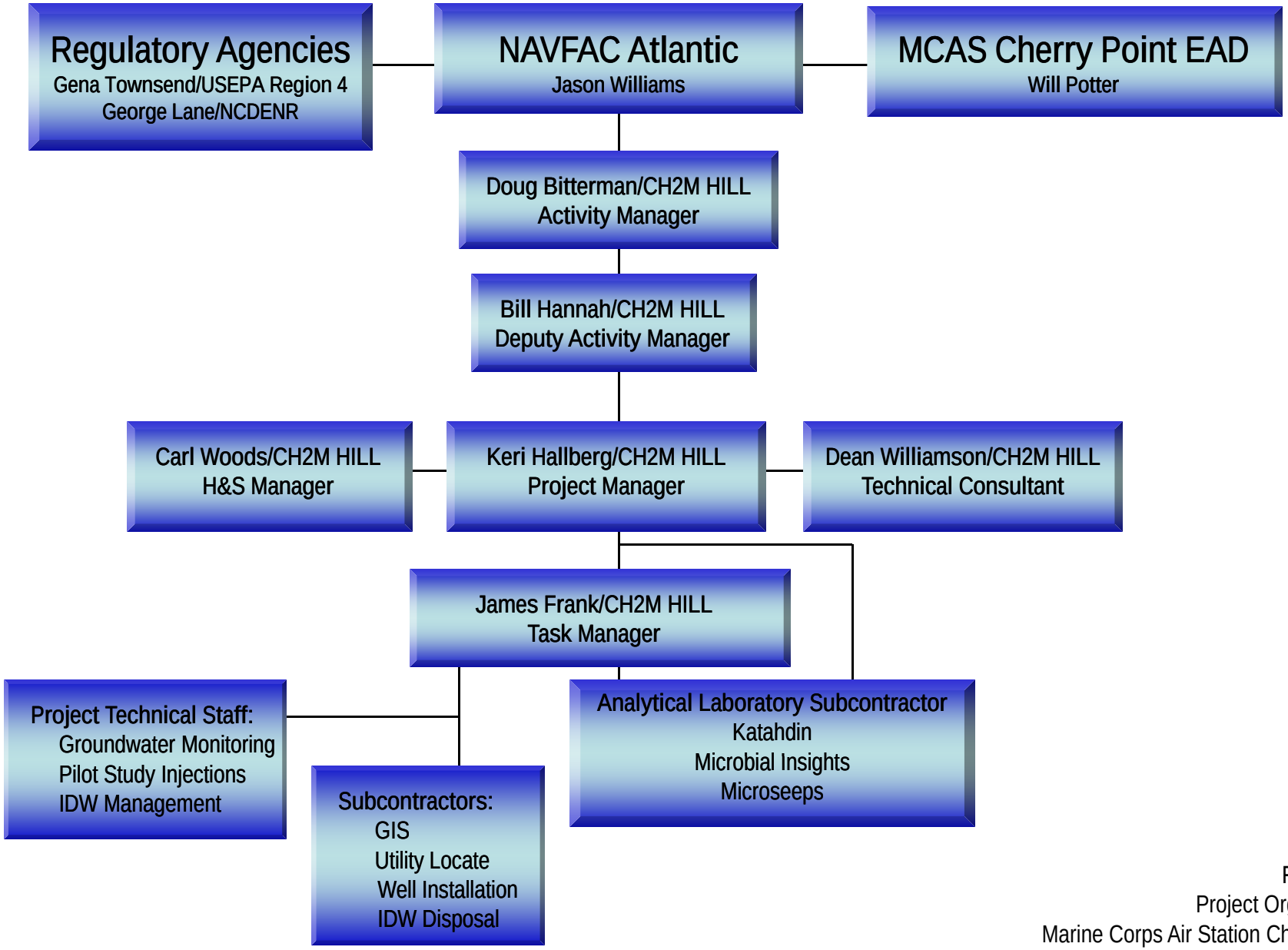

Figure 8-2
Project Organization
Marine Corps Air Station Cherry Point
Cherry Point, North Carolina

CH2MHILL®

SECTION 9

References

AGVIQ/CH2M HILL Joint Venture (JV) 1. 2004a. *Master Field Sampling Plan*, *Marine Corps Air Station Cherry Point, Cherry Point, North Carolina*. November.

AGVIQ/CH2M HILL JV 1. 2004b. *Master Quality Assurance Plan*, *Marine Corps Air Station Cherry Point, Cherry Point, North Carolina*. November.

CH2M HILL. 2009. *OU1 Remedial Investigation Addendum*, *Marine Corps Air Station Cherry Point, Cherry Point, North Carolina*. April.

CH2M HILL. 2010. *Draft Operable Unit 1 Central Groundwater Plume Feasibility Study*, Marine Corps Air Station, Cherry Point, North Carolina. March.

Naval Facilities Engineering Command (NAVFAC). 2005. *United States Environmental Protection Agency Region 4, State of North Carolina, and the United States Department of the Navy, Marine Corps Air Station, Cherry Point, North Carolina, Federal Facility Agreement Under CERCLA Section 120 Administrative Docket Number: CERCLA-04-2005-3766*. May.

SiRem, 2009. *KB-1 Bioaugmentation*. http://www.siremlab.com/kb1bioaugmentation.html. May.

Terra Systems, Inc. (Terra Systems). 2006a. *SRS® Emulsified Vegetable Oil (EVO) Substrate United States Patent# RE40,448, Product Specifications*. http:// www.terrasystems.net/ Products/products_SRS.htm.

Terra Systems. 2006b. *TSI DC Bioaugmentation Culture™, Product Specifications*. http:// www.terrasystems.net/Products/products_TSI_DC.htm.

TetraTech NUS, Inc. 2002. *Final Remedial Investigation Report for Operable Unit 1 (OU 1)*. Marine Corps Air Station, Cherry Point, North Carolina. November.

USGS. 1996. *Application of Geophysical Methods for the Delineation of Paleochannels and Missing Confining Units Above the Castle Hayne Aquifer at U.S. Marine Corps Air Station, Cherry Point, North Carolina*. Water-Resources Investigation Report 94-4186.