948

DEPARTMENT OF THE NAVY
NAVAL WEAPONS SUPPORT CENTER
CRANE, INDIANA 47522-5000

IN REPLY REFER TO:

5090/H11.9
0924

06 SEP 1990

RCRA Activities
U.S. EPA, Region V
Post Office Box A-3587
Chicago, Illinois 60690-3587

Gentlemen:

Submitted for review is the revised RFI Phase II Soils Work Plan for the Old Rifle Range, Solid Waste Management Unit (SWMU) #07/09 which incorporates comments or revisions discussed in your letter dated July 27, 1990. Requirements for submittal of this report was setforth in the Corrective actions portion of the Hazardous Waste Part B Permit issued to Naval Weapons Support Center Crane in January 1990.

NWSCC point of contact is Mr. Jim Hunsicker, Code 0924, telephone 812-854-3233.

Sincerely,

JOHN W. HAYS
Public Works Officer
By direction of the
Commanding Officer

Encl:
(1) Revised RFI Phase II Soils Work Plan for the Old Rifle Range, SWMU #07/09.
(2) Certification Statement

Copy to:
NORTHNAVFACENGCOM, Philadelphia (Code 14)
COMNAVSEASYSCOM (SEA-6541)
WES

CERTIFICATION STATEMENT

I certify under penalty of law that this document and all attachments were prepared under my direction or supervision in accordance with a system designed to assure that qualified personnel properly gather and evaluate the information submitted. Based on my inquiry of the person or persons who manage the system, or those persons directly responsible for gathering the information, the information submitted is, to the best of my knowledge and belief, true, accurate, and complete. I am aware that there are significant penalties for submitting false information, including the possibility of fine and imprisonment for knowing violations.

SIGNATURE

PUBLIC WORKS OFFICER 9/6/90

TITLE **DATE**

Enclosure (2)

RFI Phase II Soils Work Plan for:
Naval Weapons Support Center, Crane, Indiana
Old Rifle Range, SWMU #07/09

ERRATA

PAGE	SECTION	LOCATION	CORRECTIVE ACTION
14	3.1.2	Line 6	Change WES ???? to WES-6-21-83
14	3.1.2	Line 8	Change thee to the
28	4.1.3	Line 6	Change Reinsate to Rinsate

Corrections to
ORR Final W.P.

DEPARTMENT OF THE ARMY
WILMINGTON DISTRICT, CORPS OF ENGINEERS
P.O. BOX 1890
WILMINGTON, NORTH CAROLINA 28402-1890

IN REPLY REFER TO

CESAW-EN-GG

5 September 1990

MEMORANDUM FOR Commander, NWSC Crane, ATTN: Mr. Jim Hunsicker, Code 0924
Building 2694, Crane, IN 47522-5009

SUBJECT: Final Work Plan for the Old Rifle Range, SWMU 07/09

1. Enclosed are two copies of the final subject work plan for submittal to the U.S. Environmental Protection Agency and your use.

2. If there are any questions, please contact Mr. Robert Magee of our Geology Section at (919) 251-4709.

FOR THE COMMANDER:

Wm R Dawson

2 Encls

WILLIAM R. DAWSON, P.E.
Chief, Engineering Division

Jim,
xtra copies file one
with original.

RFI Phase II Soils Work Plan for:
Naval Weapons Support Center, Crane, Indiana
Old Rifle Range, SWMU #07/09

ERRATA

PAGE	SECTION	LOCATION	CORRECTIVE ACTION
14	3.1.2	Line 6	Change WES ???? to WES-6-21-83
14	3.1.2	Line 8	Change thee to the
28	4.1.3	Line 6	Change Reinsate to Rinsate

RFI Phase II Soils Work Plan for:
Naval Weapons Support Center, Crane, Indiana
Old Rifle Range, SWMU #07/09

Prepared By:
U.S. Army Corps of Engineers;
Waterways Experiment Station
Geotechnical Section
3909 Halls Ferry Rd.
Vicksburg, Mississippi

Prepared for:
Northern Division,
Naval Facilities Engineering Command
U.S. Naval Base, Bldg. 77 Low
Philadelphia, Pennsylvania

TABLE OF CONTENTS

	TITLE	PAGE
1.0	INTRODUCTION	3
	1.1.0 Site Description	3
	1.2.0 Study History	3
2.0	MANAGEMENT PLAN	8
	2.1.0 Project Objectives	8
	2.2.0 Technical Approach	8
	2.3.0 Study Management	11
3.0	SAMPLE AND ANALYSIS PLAN	14
	3.1.0 Selection Procedures	14
	3.2.0 Sampling Procedures	18
	3.3.0 Decontamination Procedures	22
	3.4.0 Sample Documentation Procedures	23
4.0	QUALITY ASSURANCE/QUALITY CONTROL PLAN	28
	4.1.0 General	28
	4.2.0 Field Activities	29
	4.3.0 Shipping Procedures	30
	4.4.0 Laboratory Q.A. Procedures	30
	4.5.0 Data Validation	33
5.0	SITE SPECIFIC SAFETY AND HEALTH PLAN	35
6.0	DATA MANAGEMENT PLAN	36
	6.1.0 General	36
	6.2.0 Data Record	36
	6.3.0 Tabular Displays	36
	6.4.0 Graphical Displays	36
	6.5.0 Report Format	36

APPENDICES

Appendix A Site Specific Safety and Health Plan
Appendix B Generic Work Plan
Appendix C Excerpts for ALG's Submission to the Navy
Appendix D ORR Groundwater Analytical Results

1.0 INTRODUCTION

1.1.0 SITE DESCRIPTION

1.1.1 Background. To fulfill the Corrective Action Requirements of the Federal Portion of the Final RCRA/HSWA Part B Permit, Naval Weapons Support Center (NWSC), Crane, Indiana is evaluating its hazardous waste management practices at its past and present disposal sites. This RCRA Facility Investigation (RFI) Phase II Soils study will be conducted at an area known as the Old Rifle Range (ORR). The US Army Corps of Engineers' (USACE), Waterways Experiment Station (USACEWES) will be conducting the study.

1.1.2 Location. NWSC Crane is a Navy facility located in Martin County Indiana. NWSC covers approximately 62,463 acres. The ORR occupies approximately 10 acres. The ORR is located near the center of the facility in the NW 1/4 of Section 35 and the SW 1/4 of section 26, T5N, R4W. The area is approximately 2000' east of the Demolition Area, SWMU #06/09. It is in the Turkey Creek valley, and it is accessed using a jeep trail off of Highway #58 (Figure 1.1.2).

1.1.3 Site History. A waste explosive flashing process is and was operated at this site. This is an operation seeking a Subpart X permit. The process started at a time which preceded 1983. Prior to being moved to this site the operation had been located at the Ammunition Burn Grounds (ABG) in T5N R3W. The operation was moved to the ORR, because it was suspected that the process was contaminating the groundwater at the ABG. This site was thought to be a more secure. Flashing is a thermal incineration process used to dispose of explosive contaminated aqueous waste. Flashing today is done in clay lined steel pans. In the past it was is done in earthen structures called flash pans (or pits). They were constructed to contain the waste materials (see Figure 1.1.3a). These pits were located along an access road shown in Figure 1.1.3b.

1.1.4 Site Hydrogeology. The majority of thee bedrock at tehe ORR is Mississippian-aged sandstone from the Hardingsburg Formation, Stephensport Group. These sandstones are described as being uniform, moderately friable, very finegrained, massive, and ranging in color from tan to orange brown. The bedrock has been cut by the ancestral Turkey Creek. The ancestral channel is filled by a gravelly clay, sandy clay, clay and clayey sand of about 20' in thickness. The soils at the site are mostly stiff, alluvial clay with minor amounts of sand and sandstone gravel. The soil thickness varies from 0' to 30'. Dunbar's report (1984) indicates that the elevation of the water table seasonaly flucuates between 4' and 17', and that the groundwater flow direction is generally eastward toward Turkey Creek, and coincident with the topography

1.2.0 STUDY HISTORY

1.2.1 Previous Investigations. In 1981 a team from the USACEWES completed a groundwater and soils investigation at the ORR. Seven monitoring wells were placed by USACEWES at this site. This study was followed by a round of groundwater and soils testing and a draft report entitled "Hydrogeological Investigation of Waste Disposal Sites at the Naval Weapons Support Center, Crane Indiana" (Dunbar, 1982). Groundwater contamination was detected in the 1981 groundwater sampling program. Detectable quantities of metals, Explosives, and Phenols were found in some of the samples. In the

groundwater analysis completed in 1989, only the inorganic contaminants was found in the groundwater. The early USACEWES hydrogeologic study was later followed by a final report entitled "Hydrogeological Site Characterization of the Old Rifle Range for Hazardous Waste Disposal Facility, Naval Weapons Support Center, Crane, Indiana (Dunbar, 1984).

1.2.2 Regulatory Status. RCRA as amended by HSWA, a hazardous waste treatment, storage, and disposal facility must be permitted by the EPA. In 1989 NWSC Crane was issued a Storage Operating Permit. The facility was required to complete a RCRA Facility Investigation (RFI). The ORR was named as a Solid Waste Management Unit (SWMU). Corrective Action Requirements (CAR) were negotiated between NWSC CRANE and the USEPA Region V. As part of the CAR the NWSC CRANE is to conduct a RFI at its SWMUs. Table 1.2.2 is a list of those SWMUs which require Phase II soils investigations. Surface and shallow subsurface soil investigations are parts of that RFI process. A RFI is a three part study, consisting of a Phase I or Environmental Monitoring Report, a Phase II or Release Assessment, and a Phase III or Release Characterization study. A RFI Phase II soils study for the Old Rifle Range site, SWMU 07/09, is to be discussed in this work Plan.

TABLE 1.2.2
RCRA Solid Waste Management Units identified
for Phase II Release Assessment, Soils

Priority	Solid Waste Management Unit	Site Number
1.	Rockeye Munitions Facility	10/15
2.	Demolition Area	06/09
3.	Old Rifle Range	07/09
4.	Pesticide Control Area	09/05
5.	Old Burning Pad	05/03
6.	Mc Comish Gorge	04/02
7.	Mustard Gas Burial Grounds	01/12
8.	Old Storage Bldg. 225	11/00
9.	Load & Fill Area, Bldg 106 Pond	08/17
10.	Mine Fill A	12/14
11.	Mine Fill B	13/14
12.	Road & Grounds Area	15/06
13.	Load & Fill Area Bldgs.	18/13
14.	Pyrotechnic Test Area	19/00
15.	CAAA QA/QC Test Area	20/00
16.	DMRO Storage Lot	21/00
17.	Lead Azide	22/00
18.	Battery Shop, Bldg. 36	23/00
19.	Sludge Drying Beds	24/00
20.	Sanitary Landfill and Lithium Batteries	14/00

1.2.3 Work Plan Structure. A RFI Phase II Release Assessment is to cover four main tasks. They are the development of a Work Plan, a Facility Investigation, an Investigation Analysis, and a Report. The enclosure is the Work Plan which is made up of five plans. Those plans are a project management plan, a sampling and analysis plan, a Quality Assurance/Quality Control plan, a health and safety plan, and a data management plan. Those individual plans will be treated as major headings and elements.

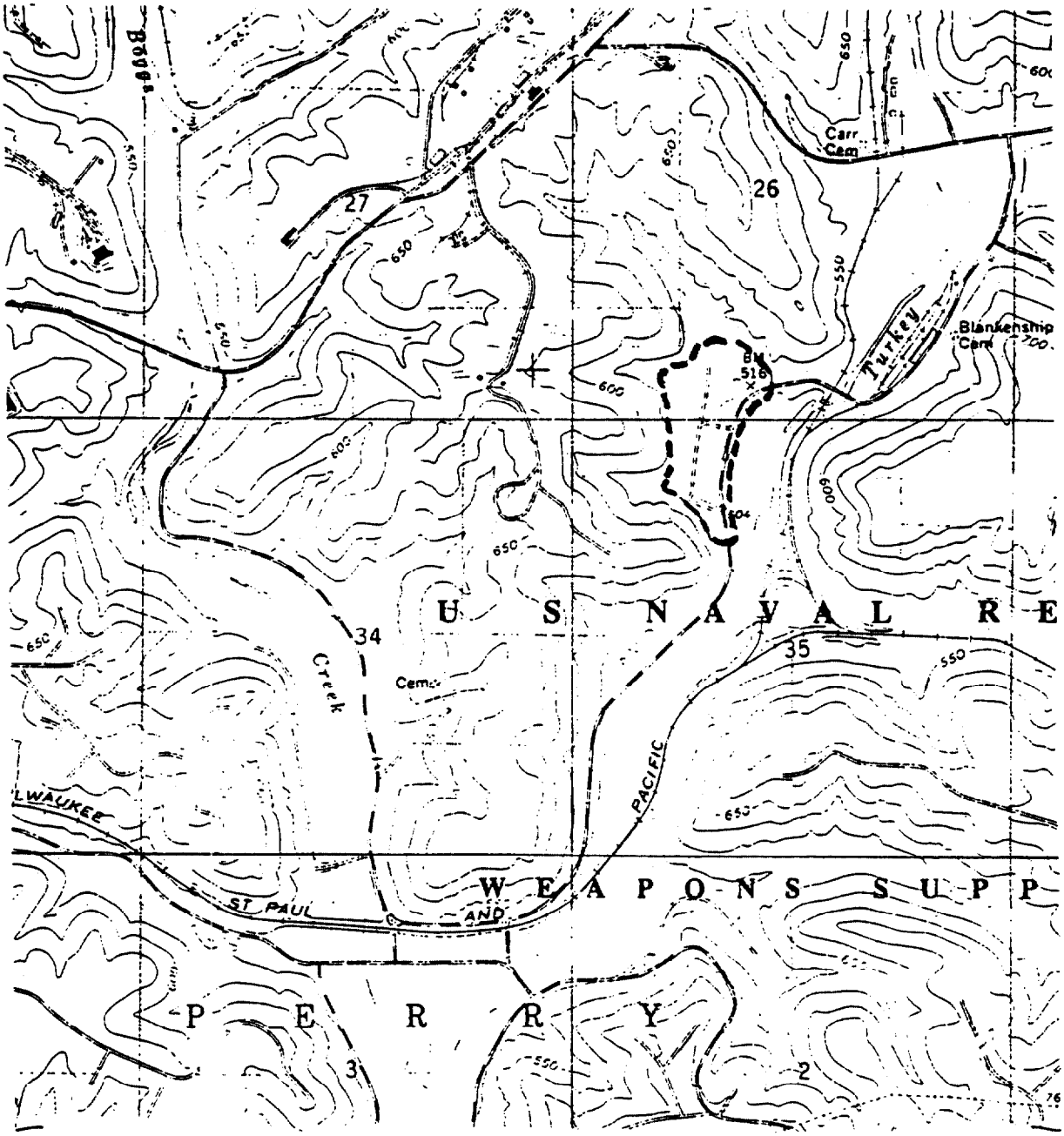

Approximate limits of Old Rifle Range

0 2000
Scale, FT

Figure 1.1.2

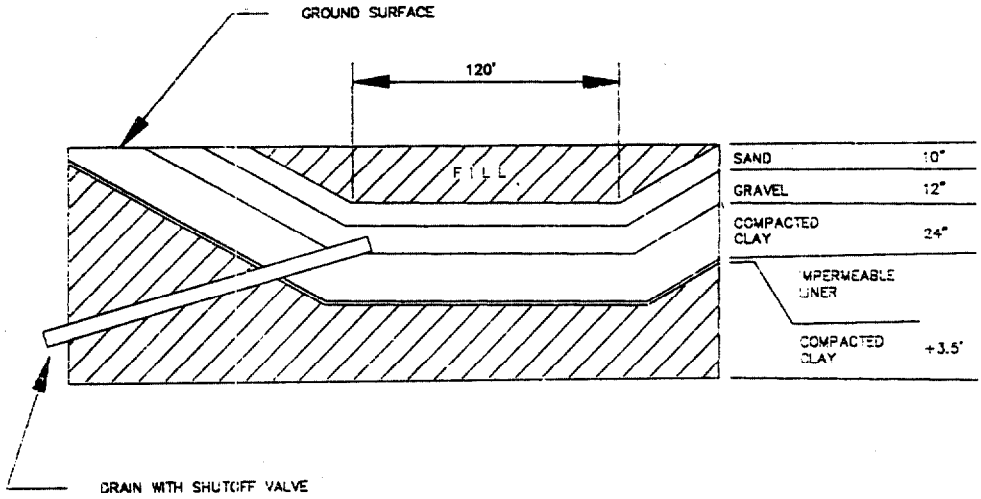

SIDE VIEW

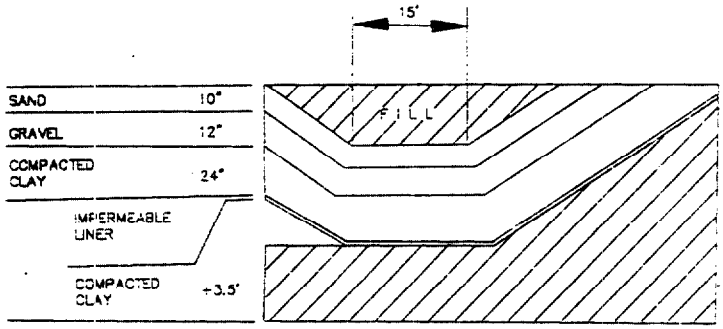

END VIEW

Figure 1.1.3a
Schematic of Flashing Pit Construction

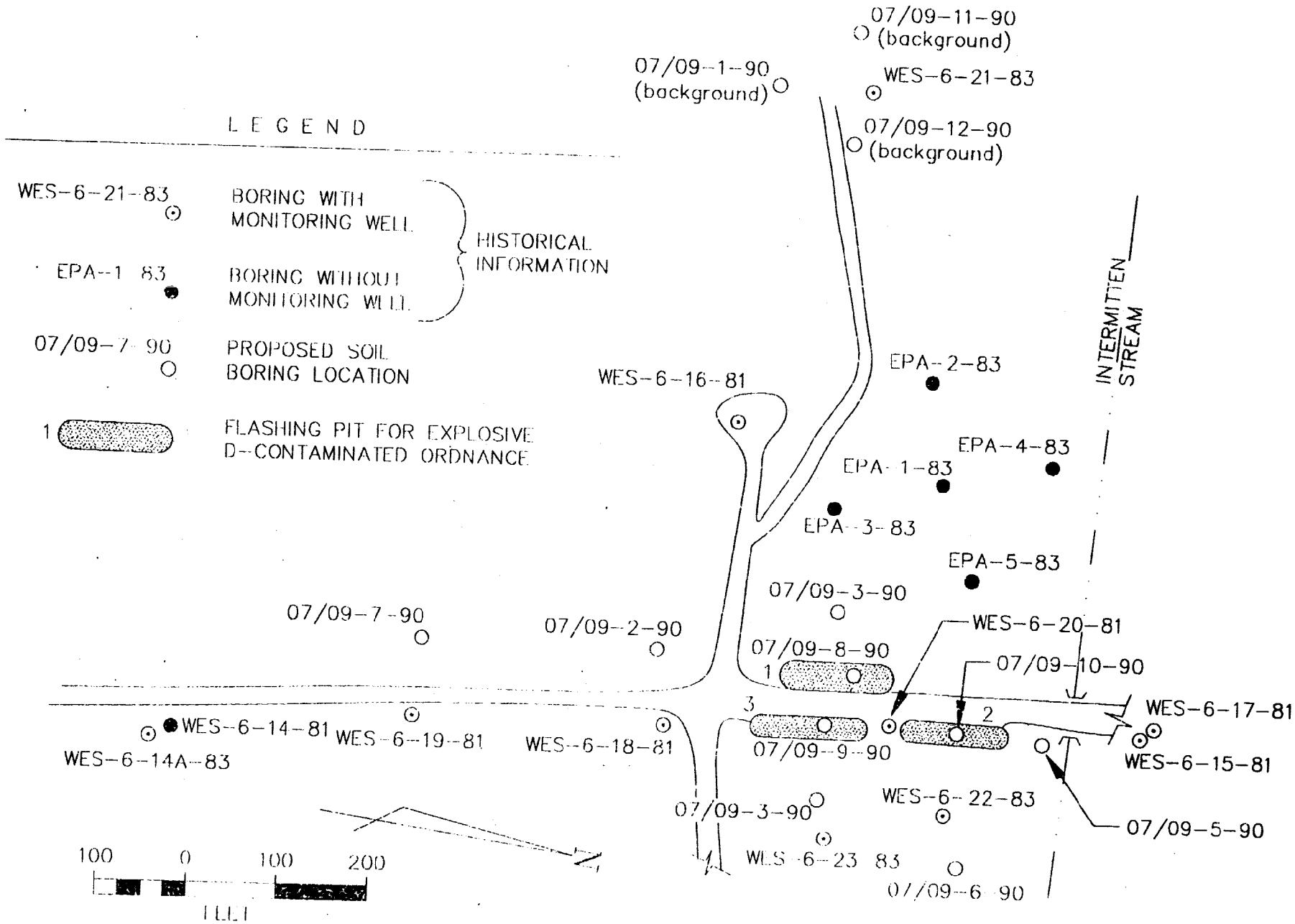

Figure 1.1.3b
Old Rifle Range Boring, Monitoring Well & Flashing Pit

2.0 ELEMENT A: MANAGEMENT PLAN

2.1.0 PROJECT OBJECTIVES

2.1.1 Study Intent. The intent of this Phase II investigation is to:1) determine if a hazardous release to the soil has occurred; 2) describe the hazardous release if it exists; 3) characterize the host medium, the soil; 4) and to address the affects the hazardous wastes and constituents have manifested on the host medium.

2.1.2 Project Description. The project is to quickly determine if there are any residual contaminants present in the soils at the site. This objective will be reached by concentrating the search at probable sites of surface and subsurface contamination. Soil samples will be gathered at those sites. Those samples will be tested for the presence of contamination. Conclusions concerning the presence or absence of contamination, the risk posed by those contaminants, and the possible future steps to be taken will be drawn. A report explaining the findings, conclusions, and future studies will be issued.

2.2.0 TECHNICAL APPROACH

2.2.1 Sample Locations. The soils portion of this RFI is to use a procedural outline provided in the Generic Work Plan for the NWSC CRANE's RFI. This Generic Work Plan has been submitted to the EPA for review. The individual studies are to be site specific. Because the site is and was a waste treatment operation, the contamination should be concentrated at the flash pits, in the immediate vicinity of the pits, and at any waste piles that may have existed at the site. Following that reasoning the sampling will be biased to locations in the pad underlying the presently used pans, in the vicinity of the pits, and at any discerned pile locations which may be identified. The structure underlying the pans was at one time used as a flash pit structure. Three background borings will be dug at a site located within the unit boundary but removed from the flashing operation. They will be dug, sampled, and analyzed using the identical procedures as were used at the other boring locations.

2.2.2 Sample Collection. Disturbed soil samples will be collected using split spoon sampling methods. For the first 5' the boring will be advanced in 1&1/2' drive lengths. From the last soil sample interval at a depth of 5' to the water table or top of rock if encountered first, samples will only be taken at major stratigraphic breaks. A soil sample will be collected just above the water table or top of rock if encountered first. For the borings within the pits care will be taken to prevent the penetration of the impermeable barrier. Pits in this usage refer to the containment structure, which was used in the flashing process, not to the clay lined, metal pans which are used today at the site. A hand auger will be used to collect those samples. In the pits samples will be collected only at the soil surface, at the sand layer, and in the clay layer (Figure 2.2.2). A puncture in the plastic impermeable barrier could result in the further spread of the contaminant.

2.2.3 Sample Testing. Flashing is an incineration disposal process. It is used to dispose of aqueous explosive (RDX, HMX, and TNT) wastes, and to reclaim metals. It is expected that the contaminants of concern are explosives and inorganics. Soil testing for the presence of inorganics,

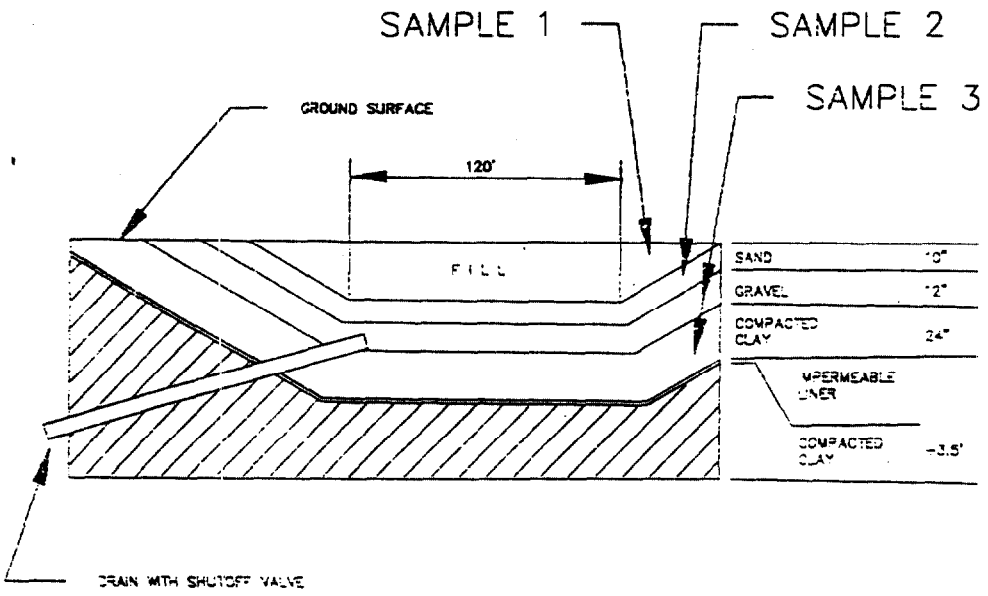

SIDE VIEW

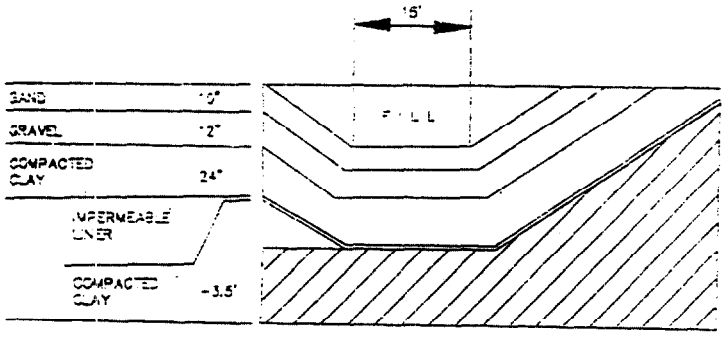

END VIEW

Figure 2.2.2
Schematic of Flashing Pit Construction

TABLE 2.2.3
Types and Numbers of Samples Collected

	Field Samples	Quality Assurance and Quality Control: Splits/Dups QC(AE)	Splits/Dups QA(CE)	Rinsates QC(AE)	Rinsates QA(CE)	Trip Blanks QC(AE)	Trip Blanks QA(CE)	
GROUNDWATER:								
Volatiles	___	___	___	___	___	___	___	
B/N/A	___	___	___	___	___	NR	NR	
Pesticides/PCB's	___	___	___	___	___	NR	NR	
TRPH	___	___	___	___	___	NR	NR	
Metals	___	___	___	___	___	NR	NR	
Other: ___	___	___	___	___	___	___	___	
SURFACE WATER:								
Volatiles	___	___	___	___	___	___	___	
B/N/A	___	___	___	___	___	NR	NR	
Pesticides/PCB's	___	___	___	___	___	NR	NR	
TRPH	___	___	___	___	___	NR	NR	
Metals	___	___	___	___	___	NR	NR	
Other: ___	___	___	___	___	___	___	___	
SURFACE SOILS:								
Volatiles	___	___	___	NR	NR	NR	NR	
B/N/A	___	___	___	NR	NR	NR	NR	
Pesticides/PCB's	___	___	___	NR	NR	NR	NR	
TRPH	___	___	___	NR	NR	NR	NR	
Metals	9	1	___	~~NR~~ 1	NR	NR	NR	10
Other:explosives	9	1	___	~~NR~~ 1	NR	NR	NR	10
SUBSURFACE SOILS:								
Volatiles 8240	7	1	___	~~NR~~ 3	~~NR~~ 2	~~NR~~ 4	NR	17
semivol 8270	7	1	___	~~NR~~ 3	~~NR~~ 2	NR	NR	13
Pesticides/PCB's	___	___	___	NR	NR	NR	NR	
TRPH	___	___	___	NR	NR	NR	NR	
Metals	35	4	___	~~NR~~ 3	~~NR~~ 2	NR	NR	39
Other:explosives	35	4	___	~~NR~~ 3	~~NR~~ 2	NR	NR	39
							TOTAL	138

explosives, and some organics will be done (Figure 2.2.3). For physical testing of the soils at least one disturbed split spoon sample per boring will be collected. Additional samples for physical testing will be collected at major stratigraphic breaks. This information will be used to characterize the soils and in the remedial technique selection. Samples collected for chemical analysis will be sent to USACEWES' Analytical Laboratory Group (ALG) in Vicksburg Mississippi, and the samples collected for physical characterization will be sent to USACEWES' Geotechnical Laboratory also in Vicksburg, Mississippi. ALG's (POC Ann Strong) address is: 3909 Halls Ferry Rd.; Vicksburg, Mississippi. The address for the Soils Investigation Laboratory (POC Mr. Jesse Oldham) is: 3909 Halls Ferry Rd.; Vicksburg, Mississippi.

2.3.0 STUDY MANAGEMENT

2.3.1 Management Responsibilities. USACEWES is the Navy's prime contractor for this Phase II soils investigation. A project team, which is made up of United States Army Corps of Engineers (USACE) personnel, was assembled (Diagram 2.3.1). Oversight and management responsibility will be handled by William Murphy of USACEWES' Geotechnical Section. The planning, scope writing, and report preparation is the responsibility of Robert Magee of USACE Engineering District, Wilmington, N.C. Field work supervision and soil sampling will be the responsibility of Paul Albertson of USACE Engineering District, Vicksburg, Ms. Drilling will be done by personnel from the In situ Section, Geotechnical Branch of USACEWES. Mr. Mark Vespi is the Section Chief. The chemical analysis is to be processed through the USACEWES' Analytical Laboratory Group (ALG) under the supervision of Ann Strong. The explosive testing is to be done by the USACE Cold Regions Research & Engineering Lab (CRREL). All chemical data validation will be done by Ann Strong's group. Soils classification and physical testing will be done at USACEWES' Soils Investigation Laboratory under the supervision of Mr. Jesse Oldham.

2.3.2 Program Schedule. Diagram 2.3.2 is a work schedule which illustrates expected work durations, phase structure, phase completion dates, and milestone dates. The dates are time figures shown in working days. Allowances for exact start dates, off days, and work delays are not shown. Field work weeks are to be 6 day weeks. The field work is scheduled to take 9 days total. This is figuring on 2 borings per day, and two days for pit sampling. To expedite data reduction the field data will be forwarded to the Wilmington Engineering District office were it will be processed in final form. 45 days are set aside for chemical and physical analysis. This is followed by 24 days of data reduction, and report preparation. The final report should be ready in 115 working days after commencement of the field work. Following the start of the soils investigation, bimonthly progress reports will be issued. These reports will include overall project progress, individual study progress, impending schedule targets, and expected or existent schedule adjustments. Because the bimonthly progress reports are independent of the individual study work plans, they are not shown on the work schedule (Diagram 2.3.2).

TABLE 2.3.1

RCRA FACILITY INVESTIGATION, PHASE II SOILS

OLD RIFLE RANGE 07/09

PROJECT ORGANIZATION CHART

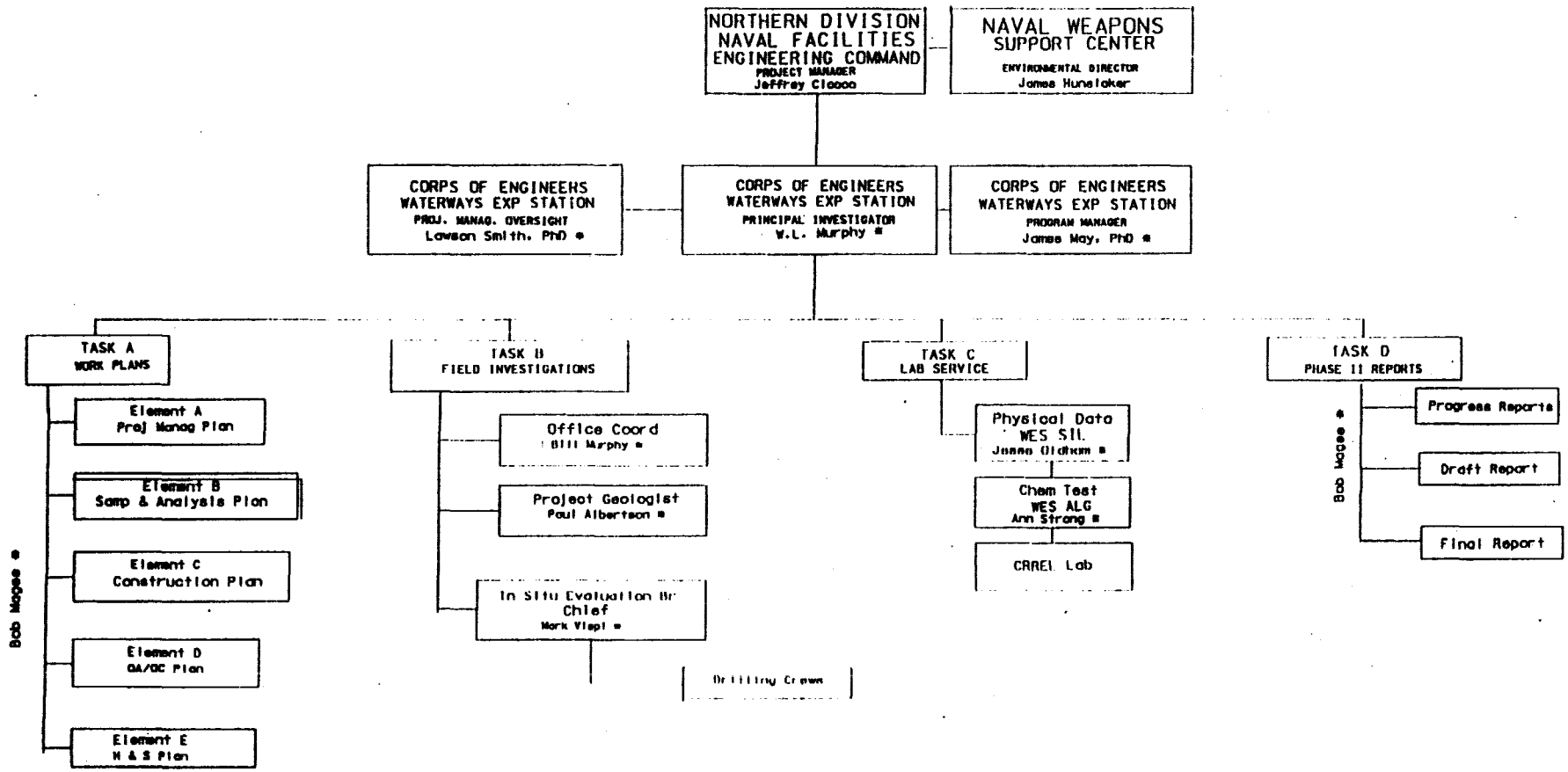

* Corps of Engineers Employees

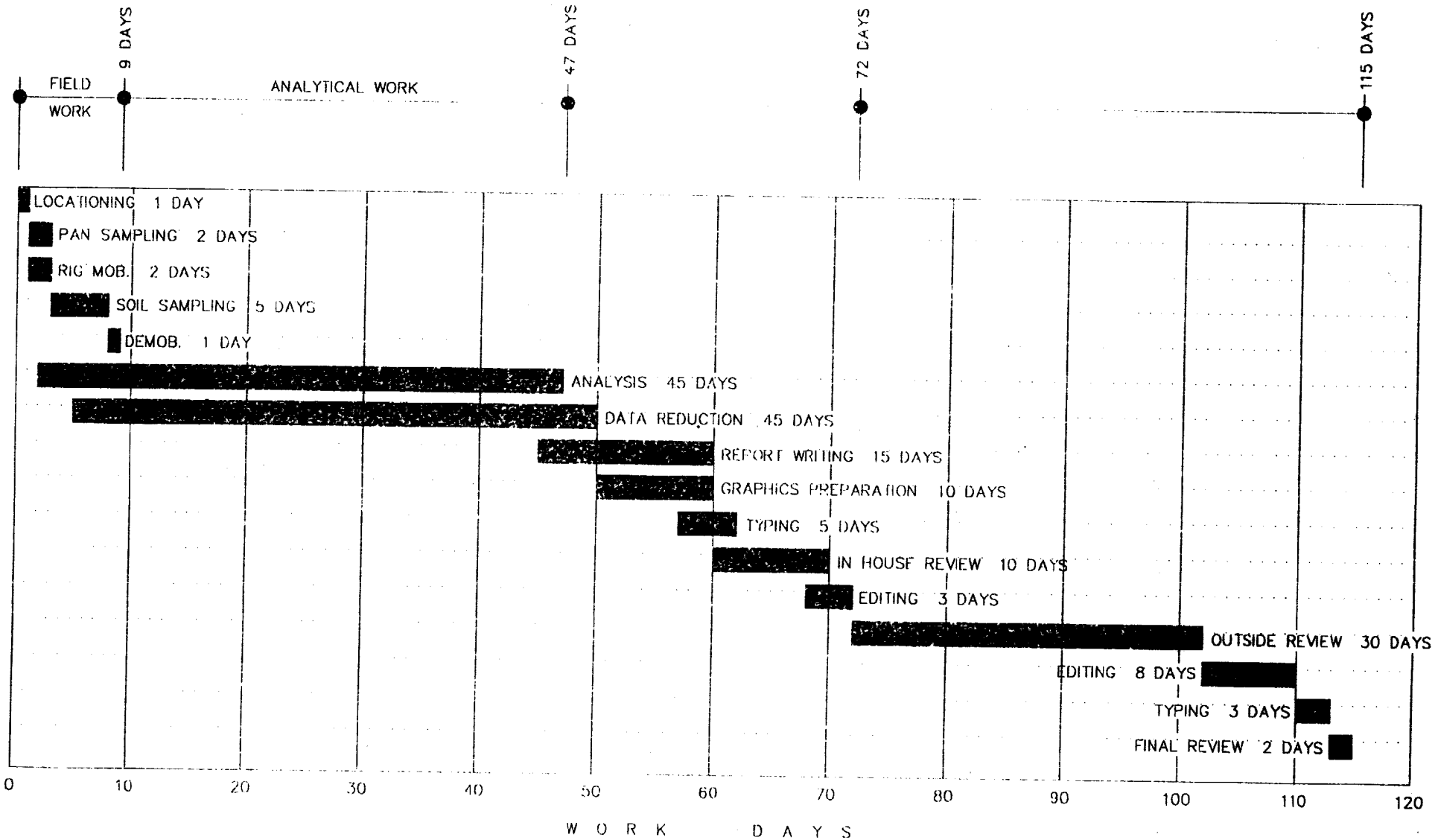

Diagram 2.3.2
Time Schedule

3.0 ELEMENT B: SAMPLE AND ANALYSIS PLAN

3.1.0 SELECTION PROCEDURES

3.1.1 Selection Rational. Because the Old Rifle Range (ORR) is used as a treatment site for contaminated aqueous waste, it was identified as a Solid Waste Management Unit (SWMU). A Phase II release assessment must be performed at the ORR. The intent of a Phase II study is to evaluate the presence or absence of a release, and to characterize the hazardous waste and its constituents. Chemical analysis will be done using SW-846 analytical methods, or other accepted methods when not SW-846 methods are available. The soil will be physically characterized using US Army Corps of Engineers geotechnical procedures. This Release Assessment will be accomplished by judiciously selecting sample locations, selecting the appropriate analytes, and using proper analytical methods.

3.1.2 Sample Location. Borings and sample locations were selected with a bias toward areas having the greatest probability of contamination. These locations are the previously used flash pit structures, the area surrounding the pits, and the areas down slope from the pits (Figure 3.1.2a). The location for the background borings were selected for their remoteness to the flash pans, and because analysis of water extracted from well WES was free of explosive contaminants. The borings shown in Figure 3.1.2 a are approximate. The exact location for the individual borings will be picked in the field. The field selected boring locations will be surveyed by field personnel. The down slope areas could have been contaminated by a contaminant spill. In the pits the sites of most imminent hazard or probable contamination will be sampled. Those sites are the upper soil layer, the sand layer, and the impermeable clay layer (Figure 3.1.2b). A programmed sample routine will be used at the boring locations. The upper soil surface will be sampled. A sample at the groundwater interface or top of rock surface will be taken.

3.1.3 Chemical Analyte Selection. Analyte selection is based on the probability of a contaminant occurring at the site. The area was used to treat liquid wastes derived from a washing process. This aqueous waste was placed in the pit structure, allowed to air dry, and then was flashed. The principle contaminants were explosives and metal wastes. Groundwater monitoring has been performed at the site and the detected contaminants were explosives and inorganics. The groundwater testing results from ORR wells are listed in Appendix D. The list of analytical test parameters shown in Table 3.1.3 were selected on the bases of their probility of occuring at the site. Explosive were burned at the site and some explosive contaminants were detected in the groundwater. The inorganic parameters consist of common metals associated with munition distruction, common toxic metals, and phosphorus which was reportably flashed at the site. The 8240 and 8270 organics were selected, because of their common industrial usage, not because there was a reported disposal or that their presence was detected in groundwater analysis. In each soil boring one set of samples will be collected for organic compound analysis. These samples will be taken from the soil interval directly overlying the water table or if bedrock is reached prior to encountering groundwater, the soil layer directly above the top of rock will be sampled. It is expected that if volatile organics exist they will will exist in the groundwater and the soil directly above the groundwater.

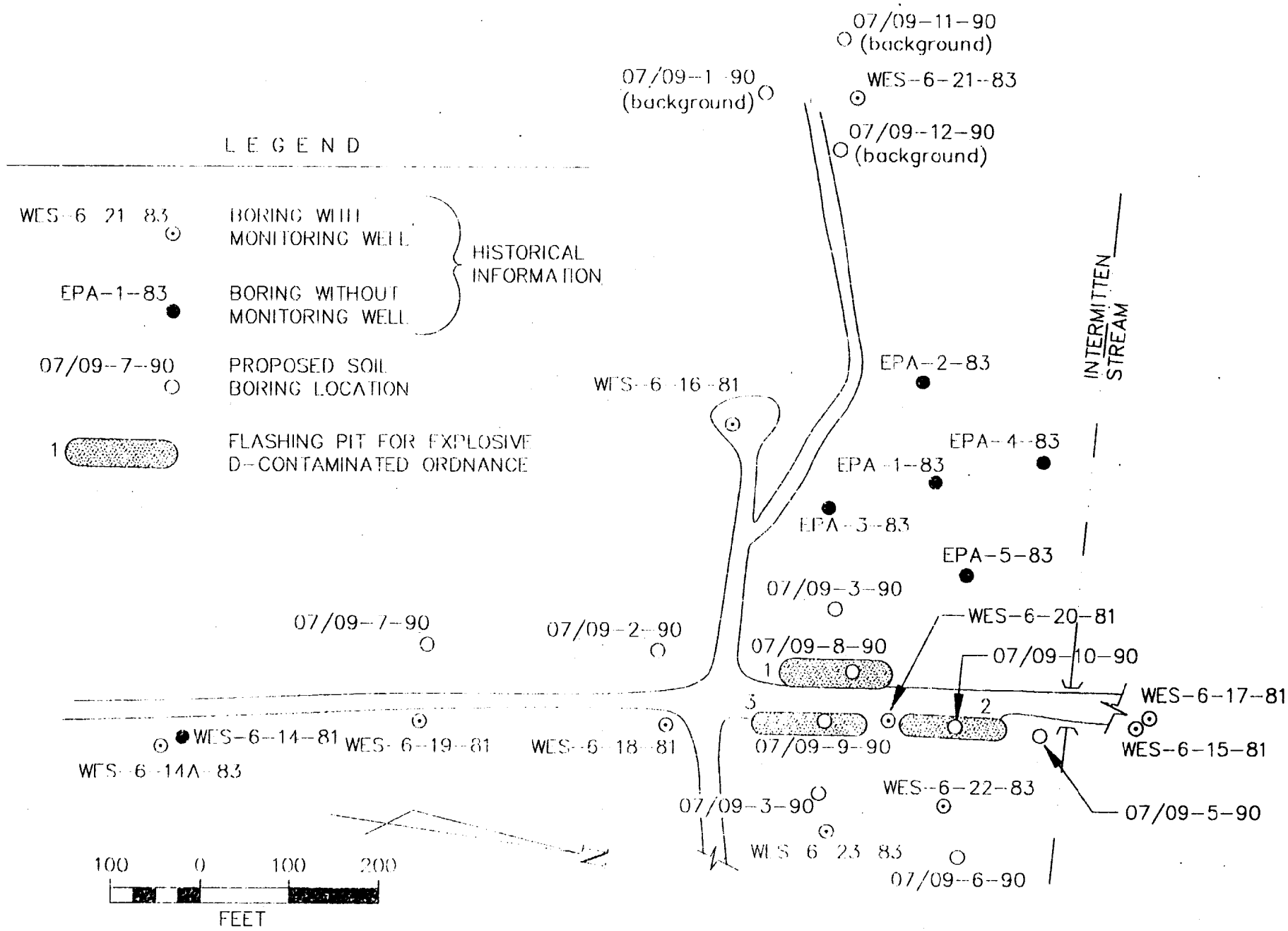

Figure 3.1.2a
Old Rifle Range Boring, Monitoring Well & Flashing Pit

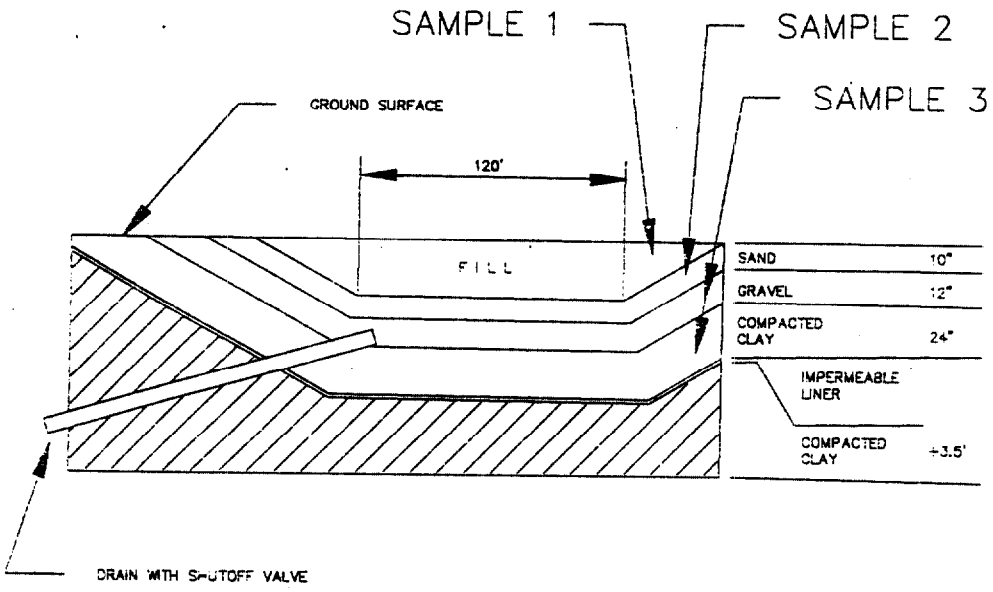

SIDE VIEW

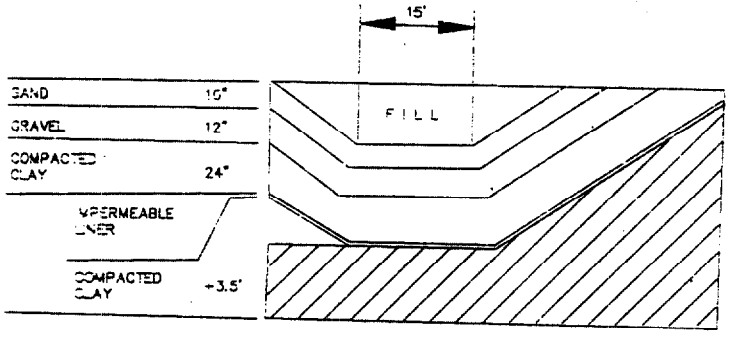

END VIEW

Figure 3.1.2b
Schematic of Flashing Pit Construction

TABLE 3.1.3
LIST OF PARAMETERS

EXPLOSIVES	INORGANICS		ORGANICS
HMX	Aluminum	Mangnesium	8240 Volatiles
TNT	Antimony	Manganese	8270 Semivol.
RDX	Arsenic	Mercury	
TNB	Barium	Nickel	
2,4 DNT	Beryllium	Phosphorus	
2,6 DNT	Cadmium	Selenium	
TETRYL	Calcium	Silver	
	Chromium	Sodium	
	Cobalt	Thallium	
	Copper	Zinc	
	Iron		
	Lead		

TABLE 3.1.4a
SUMMARY OF METHODS FOR
DETERMINATION OF INORGANIC METALLIC ANALYSIS

		SOILS METHODS from SW-846	
METAL ANALYSIS	TECHNIQUE*	EXTRACTION**	ANALYSIS
Aluminum	ICP	3050	6010
Antimony	ICP	3050	6010
Arsenic	GF	3050	7060
Barium	ICP	3050	6010
Beryllium	ICP	3050	6010
Cadmium	ICP	3050	6010
Calcium	ICP	3050	6010
Chromium	ICP	3050	6010
Copper	ICP	3050	6010
Iron	ICP	3050	6010
Lead	ICP	3050	6010
Manganese	ICP	3050	6010
Mercury	CV		7471
Nickel	ICP	3050	6010
Selenium	GF	3050	7740
Silver	ICP	3050	6010
Sodium	ICP	3050	6010
Thallium	ICP	3050	6010
Zinc	ICP	3050	6010

* Abbreviations: GF = Graphite Furnace, CV = Cold Vapor, and ICP = Inductively Coupled Plasma.
**Extraction process, when not noted, is included in the analytical method.

3.1.4 Analytical Methods Selection. Analytical method selection for chemical analytes is a mater determined by environmental regulation. US EPA mandates that RCRA studies adhere to procedures and methods set out in "Test Methods for Evaluating Solid Wastes, Physical/Chemical Methods" SW-846, Third Edition. Organic and inorganic test methods are given in Tables 3.1.3a and 3.1.3b. There are no EPA methods for the detection of explosive contaminants. The USATHAMA method SO2, developed for USATHAMA by CRREL, is the recognized detection method and will be used in this study. See the generic work plan Appendix B for a full description of the SO2 method.

3.1.5 Physical Parameter Selection. Soil samples will be characterized using standard US Army COE geotechnical methods. The soil samples will be described and classified in the field by the field crew. Unified Soil Classification System classification will be done at the laboratory. The classification will consist of a visual classification, a sieve and hydrometer analysis to determine grain size distribution of the sample, determination of natural water content, USCS classification, organic content and density. The sieve analysis determines the gradation of grain sizes ranging from the number 4 sieve to the number 200 sieve. The hydrometer analysis determines the percentage of silt and clay sized particles in the sample.

TABLE 3.1.4b
SUMMARY OF METHODS FOR
DETERMINATION OF NON-METALLIC ANALYSIS

		SOILS METHODS	
ORGANIC ANALYSIS	TECHNIQUE	EXTRACTION	ANALYSIS
Volatiles	GC/MS	INC. *	8240
Semivolatiles	GC/MS	3540/3550	8270
Explosives	HPLC	USATHAMA	USATHAMA

* INC. is used when the extraction method is included in the analysis method.

3.2.0 SAMPLING PROCEDURES

3.2.1 General Principles. Soil samples will be taken with a split spoon sampler and/or a hand auger. All sampling equipment and drilling equipment will be deconed between usage. A split spoon sampler will be used to take the soil samples outside of the flash pit area. Inside the flash pits a hand auger will be used to take soil samples. In the pits samples of the top soil, the sand layer and the clay layer will be taken. There are 3 pit structures at the ORR. Outside of the pits 9 borings are to be taken. Three of these borings will be used as a background boring. The background borings will be the first borings to be augered at the location. They will be placed at a location away from the pits. At each boring soil samples will be taken at the following depth levels, 3" to 6", 12" to 18", 18" to 24", 36" to 42" and from the last 6" directly above the water table, or top of rock which ever is encountered first. These sample intervals are shown on Figure 3.2.1. If intervals of evident or suspected contamination are found additional samples may be taken. Past soil borings in the area encountered the top of rock at a depth of 2' to 25' and encountered the water table at a depth of 15 to 20'.

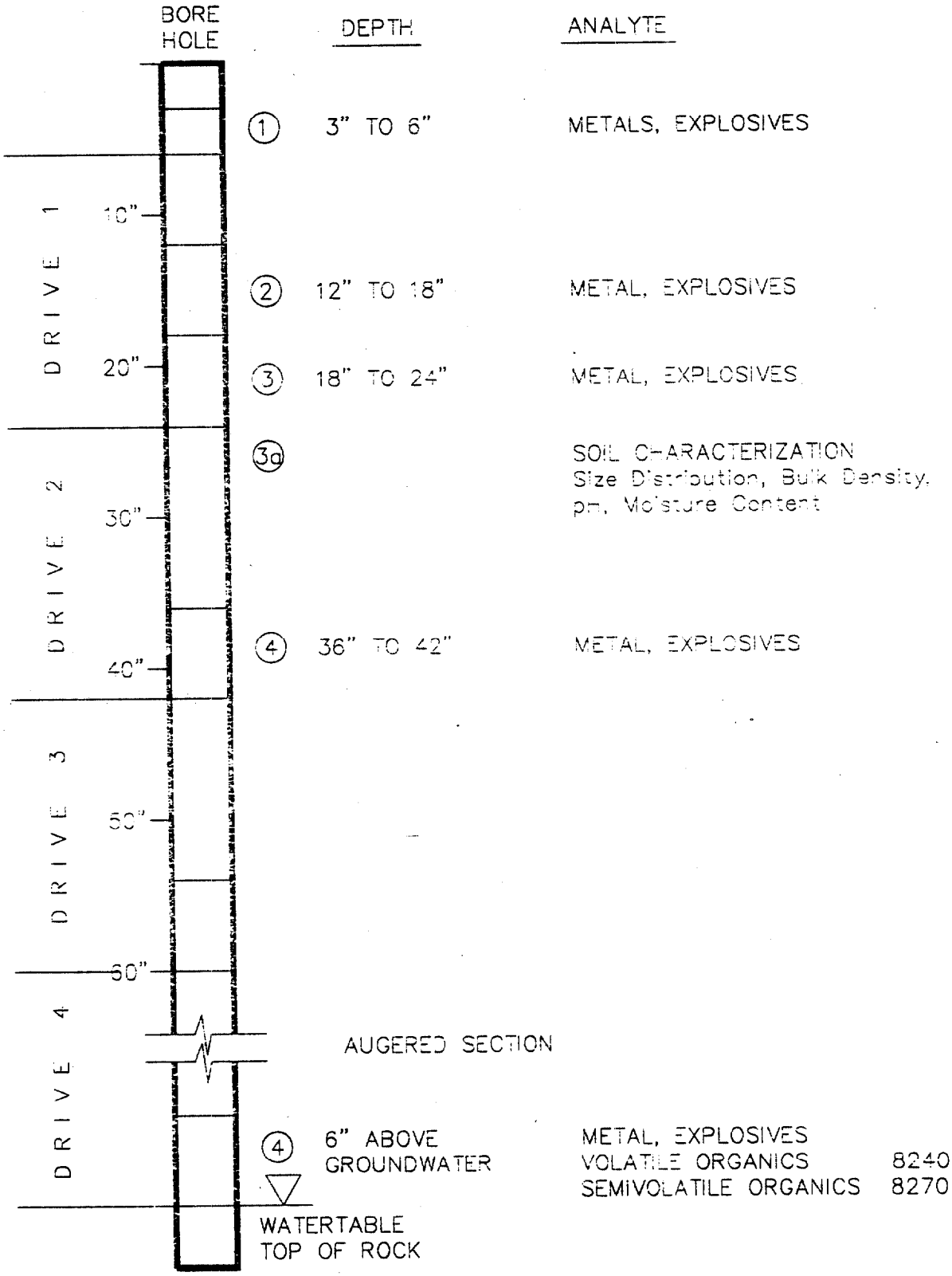

Figure 3.2.1
Diagram of Boring Log with Smaple Points
NWSC Crane Phase II Soils

One test boring will be dug to determine the present relative depths. No samples are to be taken below the water table and no samples will be taken below the top of rock. The borings are to be taken to bedrock or refusal.

3.2.2 Surface Sampling. Surface samples will be collected at all boring sites. Sod and top soil will be removed to a depth of approximately 3" below the ground surface. A soil sample will be taken using a pre-cleaned stainless sampling trowel. 8 oz. of soil will be taken for inorganic detection and 8 oz. of sample will be taken for explosives detection. A surface sample will be collected at all sampling sites.

3.2.3 Hand Auger Sampling. A cleaned shovel will be used to expose the sand layer. A grab sample will be taken using pre-cleaned hand auger. Care will be taken when extracting the sampler so that the sample does not contact the hole walls. This sample will be used to test for the presence of explosives and inorganics. 8 oz. of soil will be taken for inorganic detection and 8 oz. of sample will be taken for explosives detection. The clay layer will be exposed. It will be sampled using a separate pre-cleaned hand auger. Care is to be taken to prevent damage to the impermeable plastic liner which underlies the clay layer. 8 oz. of soil will be taken for inorganic detection and 8 oz. of sample will be taken for explosives detection.

3.2.4 Subsurface Sampling. Soil borings will be placed using a Failing 1500 truck mounted drilling rig. Samples will be taken at specified depths all above the water table and refusal. A split spoon sampler will be used to collect the soil samples. The sampler will be advanced through a hollow stem auger. The hollow stem auger will be used because it will minimize cross contamination of samples. As the auger advances into the soil protective casing is advanced which will prevent the hole from caving. At the surface, the split spoon sampler will be opened and the sample extracted, peeled, and bottled in the shortest time possible. Peeling is the process that removes the portion of the sample which is in direct contact with the sampler. Ends of the sample will not be used. Samples for volatiles analysis will be taken, bottled, and capped within 15 seconds from the time the sampler is opened. All samples will be extruded into wide-mouth glass jars or other containers with minimal disturbance of the sample. Stainless steel or plastic tools will be used to place the peeled samples into the containers. Steel tools will be used to take samples for organic tests and plastic tools will be used to take samples for inorganic analysis. The sample jars or bottles will then be sealed. Following collection, soil samples will be placed in locked ice chests (coolers) for storage at a temperature of 4 degrees C. Preservatives will not be required for the soil samples. The coolers containing the samples with their accompanying Chain of Custody forms will be transported to the analytical lab for analysis. Transport will be by air freight with an overnight carrier service. A seal will be placed on each cooler to ensure that the samples have not been disturbed during transport to the laboratory. 8 oz. of soil will be collected for inorganic detection and 8 oz. of sample will be taken for explosives detection.

The auger will advance to the vicinity of the groundwater table or top of rock which ever is encountered first. A soil sample will be taken. This sample will be analyzed for the presence of explosives, inorganics, and Appendix IX organics. 8 oz. of soil will be collected for inorganic detection, 8 oz. of sample will be taken for explosives detection, 8 oz. of soil will be taken for semivol. testing, and two 40 mL VOA vials of sample.

Appendix IX Groundwater Monitoring

The lists below summarize the compounds by fraction which are analyzed in accordance with Appendix IX regulations, published in the Federal Register, Vol. 52, No. 131, Thursday, July 9, 1987.

Volatile Compounds by EPA Method 8240

Acetone
Acetonitrile
Acrolein
Acrylonitrile
Allyl chloride
Benzene
Bromodichloromethane
Bromoform
Carbon disulfide
Carbon tetrachloride
Chlorobenzene
Chloroethane
Chloroform
Chloroprene
Dibromochloromethane
1,2-Dibromo-3-chloropropane
1,2-Dibromoethane
trans-1,4-Dichloro-2-butene
Dichlorodifluoromethane
1,1-Dichloroethene
1,2-Dichloroethane
1,1-Dichloroethane
trans-1,2-Dichloroethene
1,2-Dichloropropane
cis-1,3-Dichloropropene
trans-1,3-Dichloropropene
1,4-Dioxane
Ethylbenzene
Ethyl methacrylate
2-Hexanone
Isobutyl alcohol
Methacrylonitrile
Methyl bromide
Methyl chloride
Methylene bromide
Methylene chloride
Methyl ethyl ketone
Methyl iodide
Methyl methacrylate
4-Methyl-2-pentanone
Pentachloroethane
Propionitrile
Pyridine
Styrene
1,1,1,2-Tetrachloroethane
1,1,2,2-Tetrachloroethane
Tetrachloroethene
Toluene
1,1,1-Trichloroethane
1,1,2-Trichloroethane
Trichloroethene
Trichlorofluoromethane
1,2,3-Trichloropropane
Vinyl acetate
Vinyl chloride
Xylene

Semivolatile Compounds by EPA Method 8270

Acenaphthene
Acenaphthylene
Acetophenone
2-Acetylaminofluorene
4-Aminobiphenyl
Aniline
Anthracene
Aramite
Benzo[a]anthracene
Benzo[b]fluoranthene
Benzo[k]fluoranthene
Benzo[ghi]perylene
Benzo[a]pyrene
Benzyl alcohol
Bis(2-chloroethoxy)methane
Bis(2-chloroethyl)ether
Bis(2-chloro-1-methylethyl)ether
Bis(2-ethylhexyl)phthalate
4-Bromophenyl phenyl ether
Butyl benzyl phthalate
p-Chloroaniline
Chlorobenzilate
p-Chloro-m-cresol
2-Chloronaphthalene
2-Chlorophenol
4-Chlorophenyl phenyl ether
Chrysene
o-Cresol
m-Cresol
p-Cresol
Diallate
Dibenzofuran
Di-n-butyl phthalate
Dibenz[a,h]anthracene
o-Dichlorobenzene
m-Dichlorobenzene
p-Dichlorobenzene
3,3-Dichlorobenzidine
2,4-Dichlorophenol
2,6-Dichlorophenol
Diethyl phthalate
O,O-diethyl-O-2-pyrazinyl phosphorothioate
Dimethoate
p-(dimethylamino)azobenzene
7,12-Dimethylbenz[a]anthracene
3,3'-Dimethylbenzidine
a,a-Dimethylphenethylamine
2,4-Dimethylphenol
Dimethyl phthalate
m-Dinitrobenzene
4,6-Dinitro-o-cresol
2,4-Dinitrophenol
2,4-Dinitrotoluene
2,6-Dinitrotoluene
Di-n-octyl phthalate
Diphenylamine
Ethyl methanesulfonate
Fluoranthene
Fluorene
Hexachlorobenzene
Hexachlorobutadiene
Hexachlorocyclopentadiene
Hexachloroethane
Hexachlorophene
Hexachloropropene
Indeno(1,2,3-cd)pyrene
Isodrin
Isophorone
Isosafrole
Methapyrilene
3-Methylcholanthrene
Methyl methanesulfonate
2-Methylnaphthalene
Naphthalene
1,4-Naphthoquinone
1-Naphthylamine
2-Naphthylamine
o-Nitroaniline
m-Nitroaniline
p-Nitroaniline
Nitrobenzene
o-Nitrophenol
p-Nitrophenol
4-Nitroquinoline-1-oxide
n-Nitrosodi-n-butylamine
n-Nitrosodiethylamine
n-Nitrosodimethylamine
n-Nitrosodiphenylamine
n-Nitrosodipropylamine
n-Nitrosomethylethylamine
n-Nitrosomorpholine
n-Nitrosopiperidine
n-Nitrosopyrrolidine
5-Nitro-o-toluidine
Pentachlorobenzene
Pentachloronitrobenzene
Pentachlorophenol
Phenacetin
Phenanthrene
Phenol
p-Phenylenediamine
2-Picoline
Pronamide
Pyrene
Safrole
1,2,4,5-Tetrachlorobenzene
2,3,4,6-Tetrachlorophenol
Tetraethyl dithiopyrophosphate
o-toluidine
1,2,4-Trichlorobenzene
2,4,5-Trichlorophenol
Acenaphthene
2,4,6-Trichlorophenol
O,O,O-Triethyl phosphorothioate
sym-Trinitrobenzene

TABLE 3.2.4

5829 COPIES

will be taken for volatile analysis. Following collection, soil samples will be placed in locked ice chests (coolers) for storage at a temperature of 4 degrees C. Preservatives will not be required for the soil samples. The coolers containing the samples with their accompanying Chain of Custody forms will be transported to the analytical lab for analysis. Transport will be by air freight with an overnight carrier service. A seal will be placed on each cooler to ensure that the samples have not been disturbed during transport to the laboratory. For a listing of Appendix IX organics see Table 3.2.4. The hole will then be advanced to the bedrock using drill bit and drill pipe methods. The hole will be back filled using grout and drill cuttings. The cuttings from the first 5' of the hole, not removed for sampling, will be contained in drums. The drums will be marked and left on site. The markings will include information describing the contents of the drum, and the boring from which the cuttings were gotten. NWSC Crane will take custody of the drums and will be responsible for the disposal of the material. The remaining cuttings from the boring will be mixed with a cement/bentonite mix and will be used to fill the hole.

3.3.0 DECONTAMINATION PROCEDURES

3.3.1 General Procedures. To prevent the spreading of contaminants from one location to another and from one level to another, the sampling and drilling equipment will be cleaned between uses. The sample containers will be pre-cleaned before being delivered to the site. All personnel involved in the equipment decontamination will wear protective clothing.

3.3.2 Sampling Devices. All sampling devices will be cleaned using the following steps.

#1. Scrub equipment with a non-phosphoric detergent and potable water.

#2. Rinse with potable water.

#3. Rinse with 0.1 N (nitric acid) when sampling for inorganics. 0.1 N is prepared by adding approximately 4.2 mL. concentrated nitric acid to approximately 500 mL water. Then dilute the solution to 1 L final volume with water. Caution: add concentrated acid to water, never add water to concentrated acid.

#4. Rinse with deionized water.

#5. Rinse with methanol (pesticide grade).

#6. Air dry.

#7. Rinse with hexane (pesticide grade).

#8. Rinse with deionized water. Collect rinsate blanks now.

#9. Air Dry

#10. Wrap or cover sampling equipment with aluminum foil (shining side out) when not in use.

3.3.3 Sample Containers. The sample containers will be obtained from a supplier. The containers will be pre-cleaned. The containers will be shipped to the location in protected containers. The sample jar types and sizes are given on Table 3.3.3. A verification of the decontamination procedure will accompany every container shipment.

3.3.4 Drilling Equipment. Before moving onto a new drilling location, the rig, its substructure, and its drill rods, bits and auger flights will be steam cleaned. A combination steam cleaner/pressure washer will be used. A non-phosphoric detergent can be used. The washing is to remove all soil from the rig and drill equipment. A decontamination pad will

be constructed at the site. The wastewater generated during decontamination will be collected and drummed at the site. NWSC Crane will take custody of the wastewater and arrange for the testing and disposal of the waste.

TABLE 3.3.3
CHEMICAL ANALYSIS
SUMMARIZATION OF SAMPLE CONTAINERS

MATRIX	PARAMETERS	CONTAINERS
Soil	Volatiles	40 mL glass Septa vial
Soil	Semivolatiles Pesticides & PCBs Inorganics Explosives	1 X 8 oz. glass

3.3.5 Rinsate Disposal. Wastewater generated during the cleaning and decontaminating of the sampling equipment, will be collected. Decon will be done on site. Decon water will be segregated into detergent wash, acid wash water, and organic wash water. These waters will be put into drums. The drums will be properly closed and marked. The drums will be collected by facility personnel. NWSC Crane will be responsible for the disposal of the material.

3.4.0 SAMPLE DOCUMENTATION PROCEDURES

3.4.1 General Procedure. Field parameters will be recorded in a field notebook. These parameters will be transferred to Data Sheets, Chain of Custody Forms, Drilling Logs, and Sample Tags. Final documentation will be made from a consolidation of those notes, data sheets, and laboratory data.

3.4.2 Chain of Custody. A Chain of Custody program will be initiated in the field upon collection of the sample. A Chain of Custody record will accompany each shipment of samples at all times. An example of a Chain of Custody record is shown in Figure 3.4.2.

3.4.3 Sample Labeling. At the time of sample collection the sample will be placed in a prelabled, pre-cleaned sample container. The sample label is to contain the following information:

1. Site name.
2. Field station number.
3. Date and time of sample collection.
4. Sample type (grab or composite).
5. Sample location description.
6. Signature
7. Sample preservation used.
8. Analyses type.

An example of a sample label is shown in Figure 3.4.3

3.4.4 Field Logs. Field logs will be made by the geologist or inspector of each sample boring. Figure 3.4.4 is an example of a field sample/boring log. The field log documents the sample number, the date of sampling, the depth sampled, provides a field classification of the soil or

other material, the type of sampler used, the container number, and job information including type of drill rig, operator's name, site name, boring number and surface elevation if available.

3.4.5 Field Notebook. The geologist will keep a notebook. It will contain a detailed record of particulars about each sample, and sampling condition. This notebook will contain sampling dates, environmental conditions at the time of sampling, equipment conditions, soil conditions, boring locations, sample numbers, sample descriptions, sample depths, groundwater conditions, and other pertinent sampling information. Other information may include Chain of Custody data, sample shipment information, decontamination documentation, and personnel changes. This note book will remain at the site and will become a part of the project record at the end of the project.

Figure 3.4.2

USAE WATERWAYS EXPERIMENT STATION

CHAIN OF CUSTODY RECORD

PROJECT NAME

SAMPLERS: (Signature)

DATE	TIME	SAMPLE ID	NO. OF CONTAINERS								REMARKS

Relinquished by: (Signature)	Date /Time	Received by: (Signature)	Relinquished by: (Signature)	Date /Time	Received by: (Signature)
Relinquished by: (Signature)	Date /Time	Received by: (Signature)	Relinquished by: (Signature)	Date /Time	Received by: (Signature)
Relinquished by: (Signature)	Date /Time	Received by: (Signature)	Date /Time	Remarks	

WES FORM 21[illegible] 86 [illegible] EDIT OBSOLET

CHAIN OF CUSTODY

U. S. ARMY CORPS OF ENGINEERS
WATERWAYS EXPERIMENT STATION
P.O. DRAWER 631
VICKSBURG, MS 39180

United States Army
Corps of Engineers
...Serving the Army
...Serving the Nation

U.S. ARMY CORPS OF ENGINEERS

Station No.	Date	Time	Sequence No.
Station Location			____ Grab ____

____ BOD ____ Solids ____ COD ____ Nutrients	____ Metals ____ Oil & Grease ____ D.O. ____ Bact. ____ Other	Remarks/Preservative:
Samplers:		

Serial Tag No. ____

Figure 3.4.3 Example of Chain of Custody Sample Tag

U.S. ARMY CORPS OF ENGINEERS
OFFICIAL SAMPLE SEAL

Sample No. Date

Signature

Print Name and Title (Inspector, Analyst, Tech.)

SEAL BROKEN BY

Figure 3.2.4 Example of Tamper-proof Seal

BORING LOG
FIELD DATA

Project NWSC Ground - Water Study Site Crane, IN Date:
Location Job No. 441-G150.13GR21/22
Drill Rig Failing Inspector J. Dunbar Operator G. Drake Surface El 764.37 Boring No.

SAMPLE NUMBER	DATE TAKEN 1983	STRATUM FROM	STRATUM TO	DRIVE FROM	DRIVE TO	SAMPLE FROM	SAMPLE TO	TYPE OF SAMPLER	Hyd Press.	Cont.	CLASSIFICATION AND REMARKS
1	25 July	0.0		0.0	0.5	0.0	1.79	3" Shelby Tube	100	ST	Sandy Clay (CL): brown, soft, damp,
1A				0.5	1.0	1.79	1.94		200	Jar	very fine-grained sand, gravelly
				1.0	1.5				230		(sandstone)
			2.8	1.5	2.0				360		Sample length: 1.94 ft
1B				0.0	2.8	0.0	2.80	5" Folding Auger		Jar	Cleanout
				2.0	3.0			6" Rock Bit			Cleanout: room for core barrel
		2.8	—	3.0	8.0	3.0	8.0	4x5-1/2" Core Barrel		Run1	See drilling log page 2
				8.0	9.8	8.0	9.8	" "		Run2	
				9.8	14.8	9.8	14.8	" "		Run3	
				14.8	20.0	14.8	20.0	" "		Run4	
	26 July			20.0	25.0	20.0	25.0	" "		Run5	
				25.0	25.7	25.0	25.7	" "		Run6	
				25.7	30.2	25.7	30.2	" "		Run7	
				30.2	35.0	30.2	35.0	" "		Run8	

WES FORM JAN 74 819 EDITION OF NOV 1971 MAY BE USED

*Jar sample given to NWSC for chemical analysis

Sheet 1 of 7 Sheets

Figure 3.4.4

Figure 3.4.4 Boring log with sample data.

4.0 ELEMENT C: QUALITY ASSURANCE/QUALITY CONTROL PLAN

4.1.0 GENERAL:

4.1.1 Regulatory Framework. This soils investigation is a part of a Phase II RCRA Facilities Investigation. It is part of the Navy's Installation Restoration Program. Navy regulations require that its studies follow NEESA Guidance 20.2-047B "Sampling and Chemical Analysis Quality Assurance Requirements for the Navy Installation Restoration Program". USEPA regulations mandate that RCRA studies adhere to procedures and methods set out in "Test Methods for Evaluating Solid Wastes, Physical/Chemical Methods" SW-846, Third Edition.

4.1.2 QC Level Selection. The QC level selected for this site is a NEESA Level C.

4.1.3 CDQO. The Chemical Data Quality Objectives are assured by adhering to the procedures stipulated by the selected QC level. The Navy's Level C requires that:

1. EPA approved methods (SW-846 Third Edition), when available, be used.
2. Trip blanks must accompany every glassware shipment.
3. Rinsate ~~Reinsate~~ blanks be collected each day.
4. Field blanks be collected from each source of water.
5. A 10% duplication of samples be taken.

The objective of such a plan is to insure that the data collected is comparable with known conditions, that sources of extraneous contamination can be determined, and that decisions made are meaningful and supported. Holding times are dictated by SW-846 procedures. Those holding times are parameter specific (Chart 4.4.2). They are to be adhered to specifically to assure the quality of the analytical data.

TABLE 4.1.3
CHEMICAL ANALYSIS
PRESERVATION AND HOLDING TIMES

MATRIX	PARAMETERS	PRESERVATION	MAX. HOLDING TIMES	
			EXTRACTION	ANALYSIS
Soil	Volatiles	Ice to 4 Deg.		14 d.
Soil	Semivolatiles	Ice to 4 Deg.	7 d.	40 d.
Soil	Inorganics & Cyanide	Ice to 4 Deg.		180 d.

When only analysis holding time is given, this implies total holding time from sampling until analysis.

4.1.4 Field QC Samples. The number of QC samples are determined by the level of QC implemented. The types of QC samples remain the same.

4.1.4.1 Trip Blanks are defined as samples which originate from analyte-free water taken from the laboratory to the sampling site and returned to the laboratory with the volatile organic (VOA) samples. One trip blank

should accompany each cooler containing VOAs, should be stored at the laboratory with the samples, and analyzed by the laboratory. Trip blanks are only analyzed for VOAs.

4.1.4.2 Equipment Rinsates are the final analyte-free water rinse from equipment cleaning collected daily during a sampling event. Initially, samples from every other day should be analyzed. If analytes pertinent to the project are found in the rinsate, the remaining samples must be analyzed. The results from the blanks will be used to flag or assess the levels of analytes in the samples. This comparison is made during data validation. The rinsates are analyzed for the same parameters as the related samples.

4.1.4.3 Field Blanks consist of the source water used in decontamination and steam cleaning. At a minimum, one field blank from each event and each source of water must be collected and analyzed for the same parameters as the related samples.

4.1.4.4 Field Duplicates for soil samples are collected, homogenized, and split. All samples except VOAs are homogenized and split. Volatiles are not mixed, but select segments of soil are taken from the length of the core and placed in 40-mL glass vials. Field duplicates should be collected at a frequency of 10% per matrix for Level C. All the duplicates should be sent to the laboratory responsible for analysis. The same samples used for field duplicates shall be split by the laboratory and be used as the laboratory duplicate or matrix spike. This means that for the duplicate sample, there will be analysis of the normal sample, the field duplicate, and the laboratory matrix spike/duplicate.

4.1.4 Data Comparison. US Army Corp of Engineers soil sampling procedures are to be used when collecting soil samples at the ORR site. NEESA QC Level C requirements are to be met. The analytical laboratory to be used is a Navy approved laboratory. EPA approved test methods, when available, will be used, and USATHAMA analytical methods will be used to test for explosive contaminants. Background soil samples will be collected. They will be taken in the same manner as are the other samples, processed in the same way, and analyzed for the same parameters using the same methods.

4.2.0 FIELD ACTIVITIES:

4.2.1 Sampling. The surface soil samples will be taken with a hand trowel. The borings outside of the pit structures will be advanced using a hollow stem auger. In each boring one soil sample will be taken from the soil interval directly above the groundwater table or top of rock. Samples will be collected at each of the pit sites. Hand tools will be used to take those samples. The deeper soil will be sampled using a hand auger. The soil samples will be tested for the presence of explosives and inorganics. Only the water table samples will be tested for the presence of semivolatile and volatile organics. Soil moisture, and soil temperatures should not significantly effect the samples. Samples will be taken under the most consistent condition possible. This is to be a one time sampling event.

4.2.2 Field Documentation.The geologist will keep a notebook detailing particulars about each sample, and sampling conditions. This notebook will contain environmental conditions at the time of sampling, equipment conditions, soil conditions, boring locations, sample depths, groundwater conditions, and other pertinent information.Generic Work Plan procedures will be used. Field logs will be made by the geologist or inspector of each sample

boring. Figure 4.2.2 is an example of a field sample/boring log. The field log documents the sample number, the date of sampling, the depth sampled, soil classification, the type of sampler used, the container number, and job information including type of drill rig, operator's name, site name, boring number and surface elevation if available.

4.2.3 Sample Documentation. Samples will be named using the following procedure. The sample number will include the past and present (SWMU) site number followed by a medium identifier (S = soil), followed by a boring number, followed with a sample interval, and followed by the sampling year. Sample intervals are numbered by depth with the first interval being the shallowest sample taken. At the time of sample collection the collected samples will be placed in prelabled, pre-cleaned sample containers. The sample label will contain the following information:

1. Site name.
2. Field station number.
3. Date and time of sample collection.
4. Sample type (grab or composite).
5. Sample location description.
6. Signature
7. Sample preservation used.
8. Analyses type.

An example of a sample label is shown in Figure (4.2.3)

4.3.0 SHIPPING PROCEDURES

4.3.1 Chain of Custody Procedures. A chain-of custody program will be initiated in the field upon collection of the sample. A Chain of Custody record will accompany the shipping containers at all times. An example of a Chain of Custody record is shown in Figure (4.3.1).

4.3.2 Sample Containers. Sample containers will be delivered from the laboratory in a cleaned condition. They will be shipped with appropriate documentation certifying their decontaminated condition. The containers will be stored on location in a secure location until used.

4.3.4 Sample Preservation. Each sample will be placed in an appropriate sample container. The containers will contain proper preservatives when needed. Following collection, the samples will be placed in ice chests for storage and shipping.

4.3.5 Sample Shipping. Transportation will be by commercial airfreight transporter. Delivery to the laboratory will be within 24 hours of sampling. A Chain of Custody program will be initiated in the field and a Chain of Custody form will accompany the shipment. All shipments of samples must have correct Department of Transportation placarding and documentation. The shipments will be accompanied by signed Chain of Custody forms.

4.4.0 LABORATORY QA PROCEDURES

4.4.1 General. The Corps of Engineers' Waterways Experiment Stations Analytical Laboratory Group have a set QA procedure which was covered in its application for Navy approval. Excerpts from the application document are contained in the Appendix C to this Work Plan.

Hole No.

DRILLING LOG	DIVISION	INSTALLATION	SHEET OF SHEETS

1. PROJECT	10. SIZE AND TYPE OF BIT
2. LOCATION (Coordinates or Station)	11. DATUM FOR ELEVATION SHOWN (TBM or MSL)
3. DRILLING AGENCY	12. MANUFACTURER'S DESIGNATION OF DRILL
4. HOLE NO. (As shown on drawing title and file number)	13. TOTAL NO. OF OVER-BURDEN SAMPLES TAKEN — DISTURBED — UNDISTURBED
5. NAME OF DRILLER	14. TOTAL NUMBER CORE BOXES
	15. ELEVATION GROUND WATER
6. DIRECTION OF HOLE ☐ VERTICAL ☐ INCLINED _____ DEG. FROM VERT.	16. DATE HOLE — STARTED — COMPLETED
7. THICKNESS OF OVERBURDEN	17. ELEVATION TOP OF HOLE
8. DEPTH DRILLED INTO ROCK	18. TOTAL CORE RECOVERY FOR BORING %
9. TOTAL DEPTH OF HOLE	19. SIGNATURE OF INSPECTOR

ELEVATION a	DEPTH b	LEGEND c	CLASSIFICATION OF MATERIALS (Description) d	% CORE RECOVERY e	BOX OR SAMPLE NO. f	REMARKS (Drilling time, water loss, depth of weathering, etc., if significant) g

Figure 4.2.2

USAE WATERWAYS EXPERIMENT STATION

CHAIN OF CUSTODY RECORD

PROJECT NAME

SAMPLERS: (Signature)

DATE	TIME	SAMPLE ID	NO. OF CONTAINERS								REMARKS

Relinquished by: (Signature)	Date /Time	Received by: (Signature)	Relinquished by: (Signature)	Date /Time	Received by: (Signature)
Relinquished by: (Signature)	Date /Time	Received by: (Signature)	Relinquished by: (Signature)	Date /Time	Received by: (Signature)
Relinquished by: (Signature)	Date /Time	Received by: (Signature)	Date /Time	Remarks	

WES FORM 2196

PREVIOUS EDITIONS OBSOLETE

4.4.2 Sample Receipt. Laboratory procedures outlined in Appendix C cover the receipt, storage, and disposal of received samples. Field samples are to be delivered to ALG within 24 hours of the sample date. Proper Chain of Custody procedures will be followed.

4.4.3 Calibration Procedures. The laboratory has set calibration procedures which are instrument and method specific. Those procedures are explained in Appendix C.

4.4.4 Detection Limits. Material contained in SW-846 are used to determine ability to meet contract required detection limits. The analytical methods and detection/practical quantitation limits are presented in Appendix C. For organic analyses, the analyses are highly matrix dependent and higher detection limits are reported when interferences prohibit the reporting of the specified limits.

4.4.5 Data Evaluation. All data is checked by the analyst, the inorganic team leader or the organic team leader, and the Chief, ALG before it is submitted to the customer. The following items are checked:

1. Completeness
2. Duplicate values for precision
3. Recovery of Spikes for accuracy
4. Method blanks for contamination
5. Surrogate recoveries for organic analysis
6. Data for QA check samples
7. Reasonableness and trends

If data falls outside acceptable limits as described in the procedures, sample are rerun if sample is available. If data falls outside acceptable limits on the reruns and QA check sample data is good, then data may be reported with qualifying explanations. Acceptable data is usually defined by the specific procedural method (i.e. SW-846).

4.4.6 Control Conditions. Control Chart construction and Corrective Actions are explained in Appendix C.

4.4.7 Document Management. The sample management officer is also in charge of the document control. She maintains the master logbook, the computer logbook, the computer-generated bench sheets, the completed computer generated bench sheets and the final computer generated reports, Each analyst maintains the raw data files and his/her instruments. Final Data reports are approved by the team leader, the quality assurance officer and the Chief, ALG.

4.5.0 DATA VALIDATION:

4.5.1 Management Responsibility. Analytical data is validated by the team leaders, the quality control officer, and the Chief, Analytical Laboratory and consists of the following steps.

4.5.2 Procedures. Completeness Check is (1) be sure that all samples and analysis have been processed, (2) ensure complete records including Chain of Custody for each analysis and associated QC sampled, (3) ensure that procedures specified in project planning have been followed, and (4) assure that all calibrations were performed.

4.5.3 Data Evaluation. Data evaluation with respect to:

1. detection limits.
2. control limits for duplicates, spikes, blanks, and surrogates.
3. data control within control limits and corrective action.
4. flagging of consistently out of control data.

4.5.4 Control Factors. Data is to be evaluated with respect to holding times and QA sample analysis results.

5.0 ELEMENT D: HEALTH AND SAFETY PLAN

SEE APPENDIX A

6.0 DATA MANAGEMENT PLAN

6.1.0 General. A RFI Work Plan is made up of five elements. The purpose of the Work Plan is to guide the investigative work through those separate elements. The Data Management Plan is the final element of the Work Plan. It is the part of the Work Plan that explains the movement of the data to final report form. Chemical and Physical Data is reduced from its raw form into final form by the laboratory personnel. The final data is then put into a report format. The data will be presented in various text, tabular, and graphic formats. Concurrent with the work on the individual sites progress reports for the overall soil investigation program, bimonthly reports of progress will be issued. These bimonthly progress reports are separate from the individual SWMUs' studies and are covered under the generic work plan for the RFI soils investigation.

6.2.0 Data Record. Recorded data will consist of site (SWMU) locations, sampling station (boring) numbers and location, sample number and depth sampled, date sampled, names of sampling personnel, sample descriptions and other boring log data, Chain of Custody information, parameters measured, laboratory results, and analysis of results. Locations will be recorded on map positions on base maps.

Chemical and Physical laboratory results will be presented as computer print outs generated by the analyzing laboratory and will include parameters such as the sample number, parameter measured, amount detected, date analyzed, units used, a lab ID number for each sample, duplicates, and results of analysis of blanks. The data will be presented in Appendixes to the Draft and Final Report.

6.3.0 Tabular Displays. Tables of data will include field data (sample station number, number of samples per station, depths sampled, date sampled, and ect.) and laboratory data for chemical and physical testing results.

6.4.0 Graphical Displays. Data will be presented in various graphical formats. Sample boring locations will be presented on base maps. Contaminant Plume maps will be made to display the contaminate spread. Cross sections of the soil profile will be made to display the vertical distribution of soil type and contaminant concentrations. Bar and line graphs will be used to show contamination levels. Pertinent photographs will be included in the report to refine a point or add emphasis to a finding. Other displays are possible.

6.5.0 Report Format. A draft and a final report will be written. A period of time for commenting will occur between the draft report and final report. This comment period will allow for important prespectives to be considered. The contents of the reports shall be arranged in accordance with the suggested RFI format as presented in RFI Guidance Manual (USEPA, OSWER Directive 9502.00-6c, April 1987). The report shall consist of 8 1/2" X 11" pages with drawings to be folded, if necessary, to this size. Large displays will be presented as Plates found at the end of the report but refered to within the text. To reduce the number of drawings, data, and ideas should be combined on drawings. But drawing details will not be cluttered or poorly organized. The data must not reduce the drawings effectiveness. All drawings shall be of engineering quality in drafted form with sufficient detail to show interrelations of major features and/or thoughts on the installation site map. A decimal paragraphing system shall be used, with each section and paragraph of the reports having a unique decimal designation. The report covers shall consist of durable 3-ring binders and shall hold pages firmly while allowing

the easy removal, addition, or replacement of pages. In the appendix of the draft report only there shall be a statement listing the persons who had significant and specific imput into the report's preparation. This statement will include the individual's name, job title, and telephone number.

APPENDIX A

SITE SPECIFIC SAFETY AND HEALTH PLAN
RFI PHASE II SOILS STUDY
FOR ORR, NWSC CRANE

SITE-SPECIFIC SAFETY and HEALTH PLAN
for NWSC, CRANE, IN
for
FLASH PANS, OLD RIFLE RANGE ORDINANCE DISPOSAL AREAS

PREPARED FOR

U.S ARMY CORPS OF ENGINEERS (WES)

TABLE OF CONTENTS

1.0 Purpose 1

2.0 Location and Site Description 1

3.0 Site Investigation Personnel 1

4.0 Hazard Assessment and Contaminant Characterization 6
4.1 Physical 6
4.1.2 Equipment 6
4.1.3 Chemical 6
4.1.4 Radiological 6
4.1.5 Biological 6

5.0 Investigation Activities and Associated Hazards 6
5.1 Drilling 6

6.0 Worker Protection Requirements 6
6.1 Training Requirements 6
6.2 Medical Monitoring Requirements 8
6.3 Site Inspections Meetings 10
6.4 Site Inspections 10
6.5 Personnel Protection 10
6.5.1 Division of Work Areas 10
6.5.1.1 Exclusion Zone 10
6.5.1.2 Contamination Reduction Zone 12
6.5.1.3 Support Zone 12
6.5.1.4 Work Zone Integrity 12
6.5.2 Personal Protective Equipment 12
6.5.2.1 Proposed Levels of Protection 12
6.5.2.2 PPE Inspection 13
6.5.2.3 Donning PPE 13
6.5.2.4 Work Mission Duration 13
6.5.2.5 In-Use Monitoring 13
6.5.2.6 Temperature Stress 14
6.5.2.7 Storage 14
6.5.3 Air Monitoring 14
6.5.3.1 Combustible Gas Concentrations 14
6.5.3.2 Organic Vapors (PID) 14
6.5.4 Decontamination 15
6.5.4.1 Standard Procedures 15
6.5.4.2 Emergency Decontamination 18

7.0 Contingency Plan 18
7.1 Line of Authority 18
7.2 Pre-emergency Planning 18
7.3 Fire and Accident Procedures 18
7.3.1 Fire Response 19
7.3.2 Accident Response 19

7.4 Emergency Information 20
7.4.1 Site Maps 20
7.4.2 Emergency Telephone 20
7.5 Emergency Documentation 21

8.0 Logs Records and Reports 21

9.0 Field SSHP 21

10.0 Changes to the SSHP 21

11.0 References 21

APPENDICES

APPENDIX A STANDARD OPERATING PROCEDURES
APPENDIX B EMERGENCY CONTINGENCY PLAN, LOG/RECORD
APPENDIX C CHEMICAL FACT SHEETS

1.0 PURPOSE:

The Site-specific Safety and Health Plan (SSHP) establishes procedures that are to be followed in order to protect Corps of Engineers' employees from potential safety and health hazards arising from the collection of soil samples from areas adjacent to three former flash pans located in the Old Rifle Range, Ordinance Disposal Areas of the Naval Weapons Support Center (NWSC) Crane. The site is an active disposal area, no drilling/sampling activity will be carried out when the disposal operation is occurring. Any contract personnel required on this job will be required to develop and implement a SSHP that meets the minimum requirements that are outlined in the following SSHP. Supervisors are to ensure that employees understand and follow these guidelines.

2.0 LOCATION and SITE DESCRIPTION

The NWSC is located in the northern half of Martin County, in southwestern Indiana , approximately 75 miles southwest of Indianapolis and 71 miles northwest of Louisville, Kentucky. The nearest major metropolitan area is Bloomington Indiana approximately 40 miles northeast on State Highway 45. NWSC occupies approximately 100 sq. miles zone (62,463.46 acres) which includes 1,006 acres of improved grounds, 49,611 acres of unimproved grounds, and 800 acres of water (Lake Greenwood). The area is divided into facility operations, safety buffer,security zones and surrounding farmland (Figure 1,).

The exact site location is designated as the Old Rifle Range-SWMU #07/09 GG-24 and is located approximately 2000' east of the Demolition Area. The ORR occurs along the western margin of the floodplain associated with Turkey Creek, at the base of the ridge from the Demolition Area. The ORR is located near the center of the facility in the NW 1/4 of Section 35 and the SM 1/4 of Section 26, T5N, R4W. The area is composed of undulating terrain dissected by numerous well-defined drainageways. The elevation ranges from approximately 470 ft at the drainage exiting to the south to 860 ft on a ridge. The area is accessible by using a jeep trail off of Highway #58 (Figure 2,3,).
The area was utilized for bomb cook-off testing, and " waste explosive flashing ". Flashing is a thermal incineration process used to dispose of explosive contaminated aqueous waste. Formally flashing is done in earthen structures called flash pits. Todays Flashing is carried out in clay lined, steel pans set on elevated earthern structures. The elevated earthen structures are the former flash pans. It is expected that the contaminants of concern are aqueous explosive wastes Trinitrotoluene (TNT), Cyclonite (RDX), Cyclotetramethylenetrantramine (HMX), and a number of heavy metal contaminants (i.e Barium,Cadmium,Chromium,Lead,Mercury,Selenium,Silver).

In 1981 ACOE-WES/DUNBAR installed 11 monitoring wells (WES-6-14-81 to 6-23-81), in 1983 the EPA installed an additional 5 borings' (EPA-1-83 to EPA-5-83). The exact locations of the Rifle Range/flash pans and monitoring wells are shown in Figure 4.

3.0 Site Investigation Personnel. A four-person Corps of Engineers' sampling (drill crew) under the direction of a Corps of Engineers geologist will perform the investigation activities. The geologist in the supervisory capacity will act as the Site Safety Coordinator (SSC).

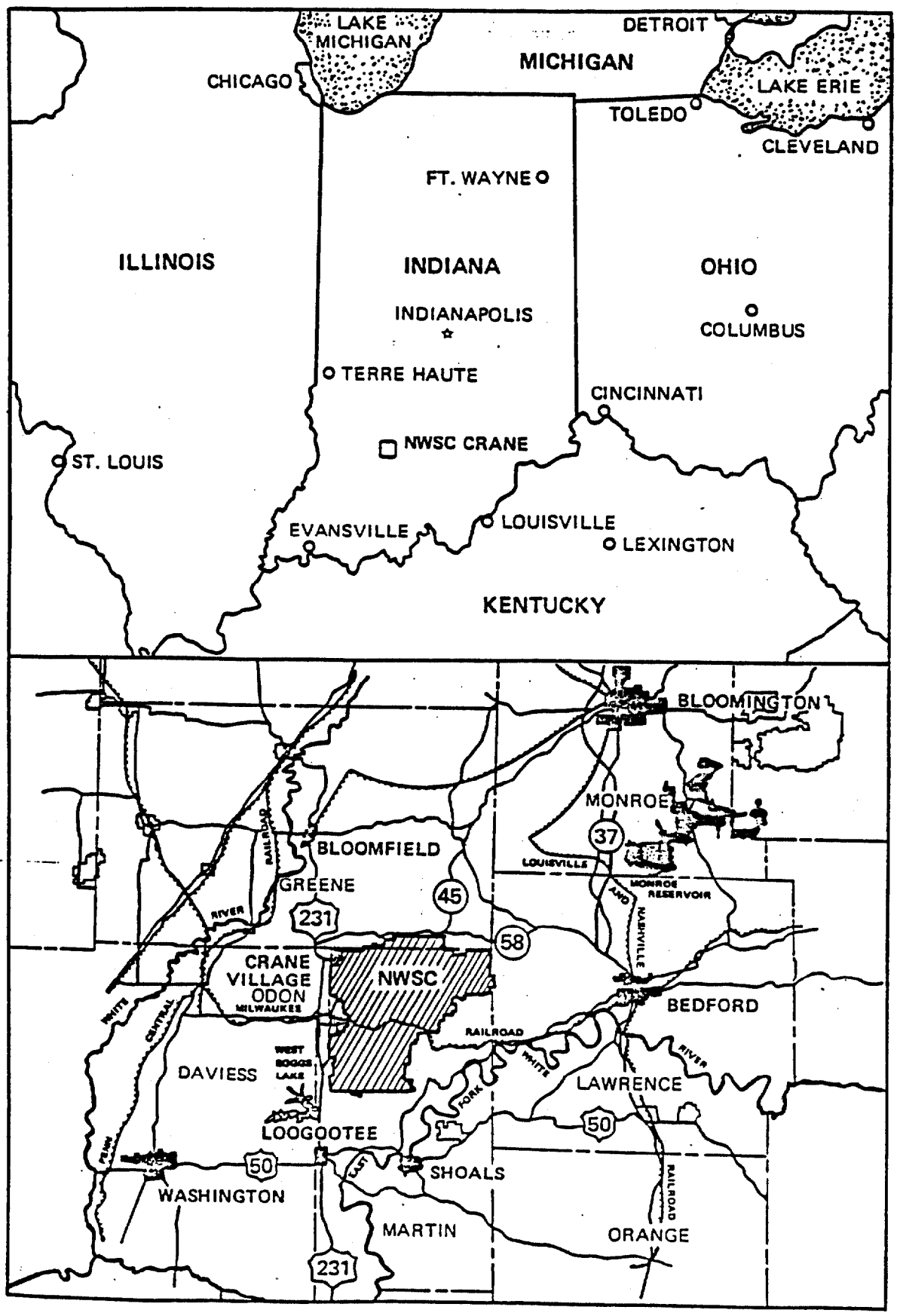

Figure 1. NWSC and Vicinity

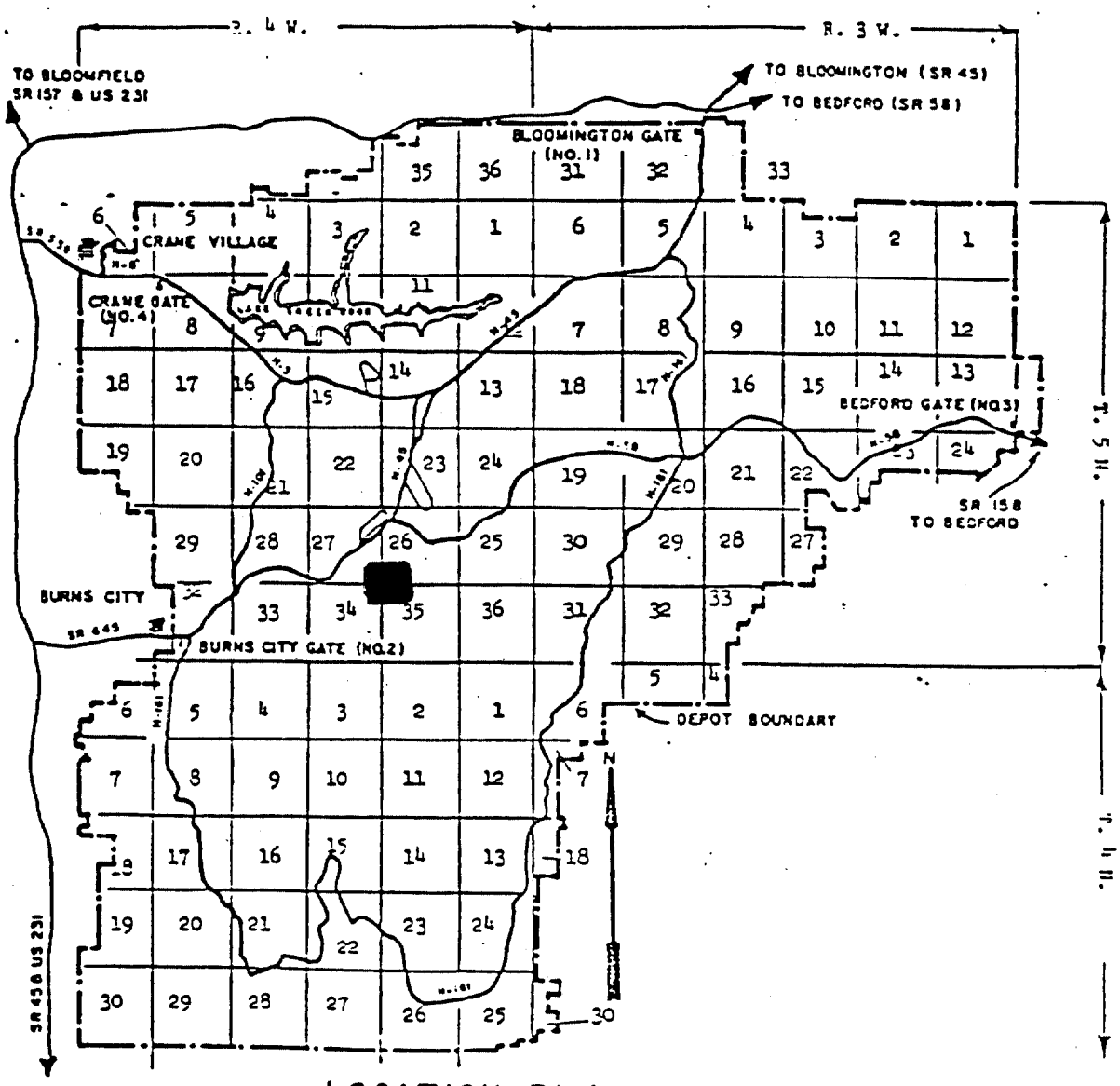

LOCATION PLAN

SCALE = GRID LINES FORM MILE SQUARES

Figure. 2. NWSC Crane Boundries and ORR

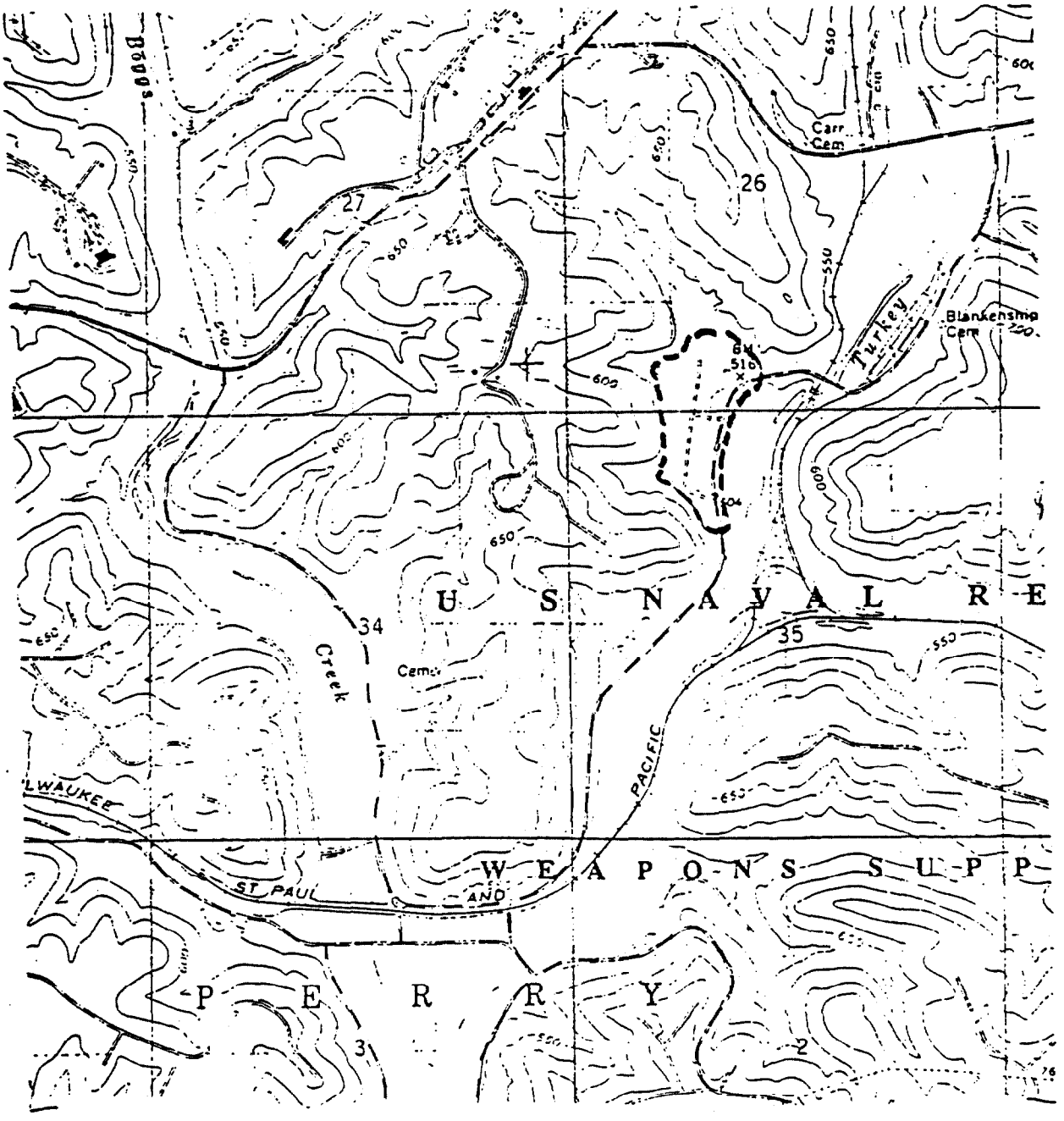

Approximate limits of Old Rifle Range

0 2000
Scale, FT

Figure 3.

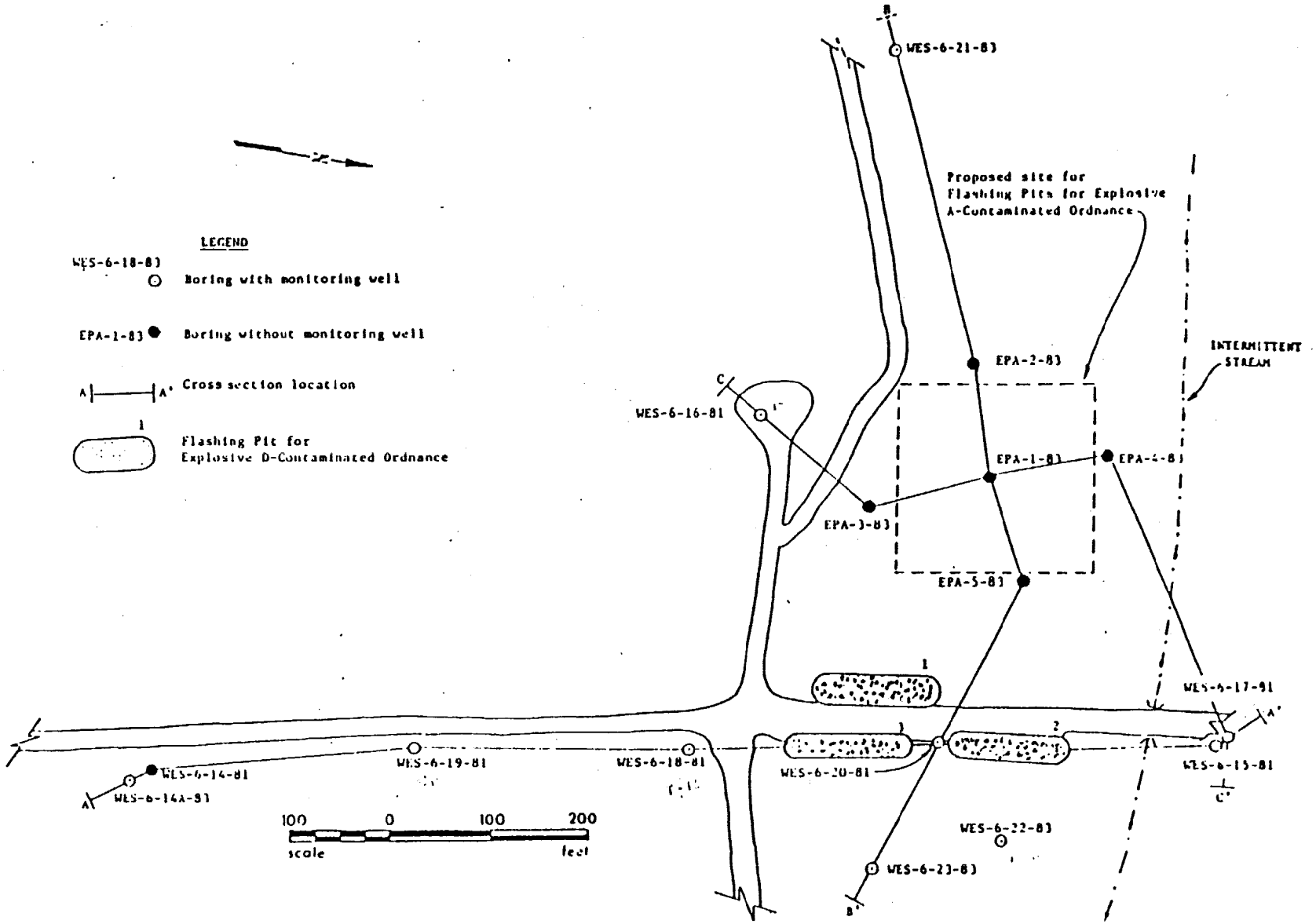

Figure 4. Old Rifle Range Boring, Monitoring Well, Flashing Pit, and Cross Section Locations

4.0 Hazard Assessment and Contaminant Characterization

4.1 Physical

4.1 Weather Extremes . The climate in the region of NWSC is a temperate climate with broad seasonal variations. Characterized by a mean January temperature of 26 degrees F and a mean July temperature of 89 degrees F. Precipitation averages approximately 44 inches annually, with 42 inches of rainfall and 15 inches of snowfall. Humidity averages 40 to 90 % in the summer and 60 to 90 % in the winter. Both heat stress and cold stress are significant potential hazards to workers. Severe weather with thunderstorms is also a possible feature of the area (Appendix A).

4.1.2 Heavy Equipment. A truck-mounted drilling operations present inherent noise and equipment hazards, a Job Hazard Analysis is attached (Appendix A).

4.1.3 Chemical. Sampling of the wells in July, 1989 revealed the contaminant concentrations shown in Table 1. A description of contaminants is provided in Appendix C.

4.1.4 Radiological. Contact with radiological contaminants is not anticipated based on the results of previous WES testing.

4.1.5 Biological. Biological Hazards include insects (ticks, mosquitoes) and two species of poisonous snakes (Appendix A).

5.0 Investigation Activities and Associated Hazards

5.1 Drilling. Drilling will be performed at the site for the collection of soil samples. Some of the bore holes will penetrate material known or suspected to contain hazardous material. The sampling and drilling have limited potential for exposing employees to parts per million (ppm, mg/m3) levels of organic vapors or soil particulates carrying heavy metal contaminants. Primary exposure routes during drilling operations will be skin absorption, ingestion and possible inhalation due to vapors and contaminant volatilization from the drill cuttings.

6.0 Worker Protection Requirements

6.1 Training Requirements. All personnel who will be engaged in hazardous waste operations must first present to the SSC certification of completion of a 40 hr hazardous waste site investigation course and an 8 hrs of annual update training as required. This training must comply with OSHA regulations found in 29 CFR 1910.120(e). Personnel not safety trained will not be allowed within the control zone (a 30 foot radius) of any field investigations being conducted at the site.
Besides initial training, all personnel involved in field investigations will be required to have site-specific training. Topics to include in site training sessions for on-site personnel include:

Table 1

Contaminant Concentration Ranges at Flash Pans
Monitoring Wells at the ORR
July, 1989

SEMI-VOLATILES

Contaminants	Well	Concentration	TLV Exposure
Phenol	6/14A-6/23	<0.05 mg/L	5ppm, 13.5mg/m3 in air.

(Inhalation Hazard, strong irritant to tissue)

EPA TOXIC METALS	Well	Concentration	EPA MCL	TWA
Arsenic	6/14A-6/22	<0.05 mg/L	0.05 mg/L	1mg/m3
Barium	6/14A	0.071 "	1 mg/L	0.5mg/m3
"	6/15	0.030 "	"	"
	6/16	0.08 "	"	"
	6/17	0.04 "	"	"
	6/18	0.026 "	"	"
	6/19	0.133 "	"	"
	6/20	<0.01 "	"	"
	6/21	<0.01 "	"	"
	6/22	0.023 "	"	"
	6/23	0.021 "	"	"
Cadmium	6/14A-6/22	<0.01 "		0.05mg/m3)
Chromium	6/14A-6/22	<0.05 "	.1 mg/L	0.05mg/m3)
Lead	6/14A-6/22	<0.05 "	.05mg/L	(NIOSH) <0.1mg/m3
Mercury	6/14A-6/22	<0.002 "	.002mg/L	0.1mg/m3
Selenium	6/14A-6/22	<0.01 "	0.05mg/L	0.2mg/m3
Silver	6/14A-6/22	<0.05 "	0.05mg/L	0.01mg/m3

EXPLOSIVES

Contaminant	Well	Concentration	TWA
TNT	6/14A-6/22	<0.02 "	1.5 mg/m3
RDX	"	<0.02 "	1.5 mg/m3
HMX	"	<0.02 "	1.5 mg/m3

MCL-Maximum Contamination Limit (in water), TWA-Time Weighted Average (8hr day, 40hr week maximum exposure)

1. Biological, Chemical, and Physical Hazards. The biological, chemical and physical hazards at the site and their respective properties will be discussed.
2. Toxicology. The potential routes of exposure to chemicals, the possible toxic effects, the IDLH (Immediately Dangerous to Life and Health) and TLV (Threshold Limit Value) values of chemical hazards at the site, and the level of personal exposure which can be anticipated will be discussed.
3. Personal Hygiene. Personal cleanliness and restrictions on the eating, drinking, and smoking on the site will be discussed.
4. Rights and Responsibilities of Workers under OSHA. Applicable provisions of the Occupational Safety and Health Act (29 CFR 1910) and the Corps of Engineers Safety and Health Program will be discussed.
5. Monitoring Equipment. The functions, capabilities, limitations use and maintenance of monitoring equipment will be discussed. A hands-on review will be held with persons assigned to use the equipment.
6. Site-Specific Safety and Health Plan. The full SSHP will be reviewed, and a field SSHP will be available to each on-site worker.
7. Standard Operating Procedures. SOP's for this work will be reviewed. These SOP's are included in the appendices.
8. Personal Protective Equipment. The use, care, and disposition of the specific PPE selected for this work will be discussed. The PPE will be available for hands-on familiarity and practice donning, as needed. Individual respirator fit testing will be conducted at this time, if needed.
9. Medical Program. Handling of medical emergencies will be discussed. The names, locations and telephone numbers of an available physician, ambulance, and hospital will be posted and available.
10. Decontamination. The decontamination procedures established for this work will be discussed.
11. Emergencies. The Emergency Contingency Plan contained in the SSHP will be reviewed.
12. Public Relations. The SSC will be provided with instruction in communicating with the press and local community.

6.2 Medical Monitoring Requirements. All site personnel will participate in a medical monitoring program. The respective components and divisions of this plan are shown in Table 2. All examinations are implemented by a licensed physician who is board-certified/board-eligible in occupational medicine. All personnel who will be engaged in hazardous waste operations must first present to the SSC certification of completion of the comprehensive medical monitoring examination within 12 months prior to the beginning of site activities. The medical monitoring program complys with OSHA regulations found at 29 CFR 1910.120(f) and Corps of Engineers requirements. The COE provides their employees with an annual indepth physical examination, including blood chemistry with complete blood count and differential; urinalysis; medical history; required chest X-ray; audiograms; pulmonary function testing; and a physician's interpretation of the employee's ability to wear a respirator. The examination may include testing for heavy metals, i.e. lead, mercury and pesticides such as DDT, DDE. The following signatures from each individual on the site verifies completion of requirements:

1. _____ 2. _____

3. _____ 4. _____

TABLE 2. Medical Monitoring Program

1. Pre-employment Screening

   a. Medical history
   b. Occupational history
   c. Physical examination
   d. Determination of fitness to work wearing protective equipment
   e. Baseline monitoring for specific exposure

2. Periodic Medical Examinations

   a. Yearly update of medical and occupational history; yearly physical examination ; testing based upon (1) examination results, (2) exposures, and (3) job class and task.
   b. More frquent testing based on specific exposures.

3. Record-keeping and Review

   a. Maintain and provide access to medical records in accordance with OSHA and state regulations.
   b. Report and record occupational injuries and illnesses.
   c. Review health and safety plan periodically to determine if additional testing is needed.
   d. Review medical monitoring program periodically in light of current site hazards, exposures, and industrial hygiene standards.

6.3 Site Inspections Meetings. To ensure that the SSHP is followed, the SSC shall conduct safety meetings before each day's work. The purpose of these meetings is to:

- Coordinate site work activities.
- Describe any changes in the SSHP.
- Obtain worker feedback on conditions affecting health and safety.
- Obtain feedback on how well the HSP is working, and discuss needed changes
- Reinforce proper work habits.

6.4 Site Inspections. The SSC will inspect daily site conditions, facilities , equipment, and activities to determine whether the SSHP is adequate and being followed. In order to make inspections effective, the SSC shall:

- Have a checklist applicable for each site and activity, listing the items to be inspected.
- Review results of these inspections with supervisors and workers in the safety meetings.
- Inspect again any identified problems to ensure that they have been corrected.
- Document all inspections and subsequent follow-up actions. Retain these records until site activities are completed and turn them in to the Geotechnical Branch at the conclusion of the work.

The frequency of inspections shall be made more or less commensurate with the characteristics of the site the equipment used on the site, and the progress of the work on the site.

6.5 Personnel Protection.

6.5.1 Division of Work Area. Considering the isolated area of the ORR in which the flash pans are located and the low levels of contaminants revealed in earlier sampling, no formal division of the work area will be made at the start of sampling. However, if air monitoring indicates the need to minimize the transfer of hazardous substances from the work site and to ensure proper protection of personnel, three zones will be established. The three contiguous work zones are (1) Zone 1: Exclusion Zone, (2) Zone 2: Contamination Reduction Zone, and (3) Zone 3: Support Zone (Figure 5).

6.5.1.1 Exclusion Zone. Contamination does or could not occur in this zone. All people entering the Exclusion Zone must wear Modified Level D protection as a minimum. An entry and exit point for personnel and equipment will be established at the periphery of the Exclusion Zone to regulate the flow of personnel and equipment by the Site Safety Coordinator.

The outer boundary of Zone 1, the Hotline, will initially be established as a 30-ft radius circle surrounding the drill rig or completed hole when bore samples are gathered. This Hotline will be defined in the field by a printed hazard ribbon or equal. Factors that will be considered in extending this boundary will be air monitoring data, the physical area necessary to conduct site operations, and the potential for contaminants to be blown from the area, but in no case will the circular boundary have a radius of less than 30-ft.

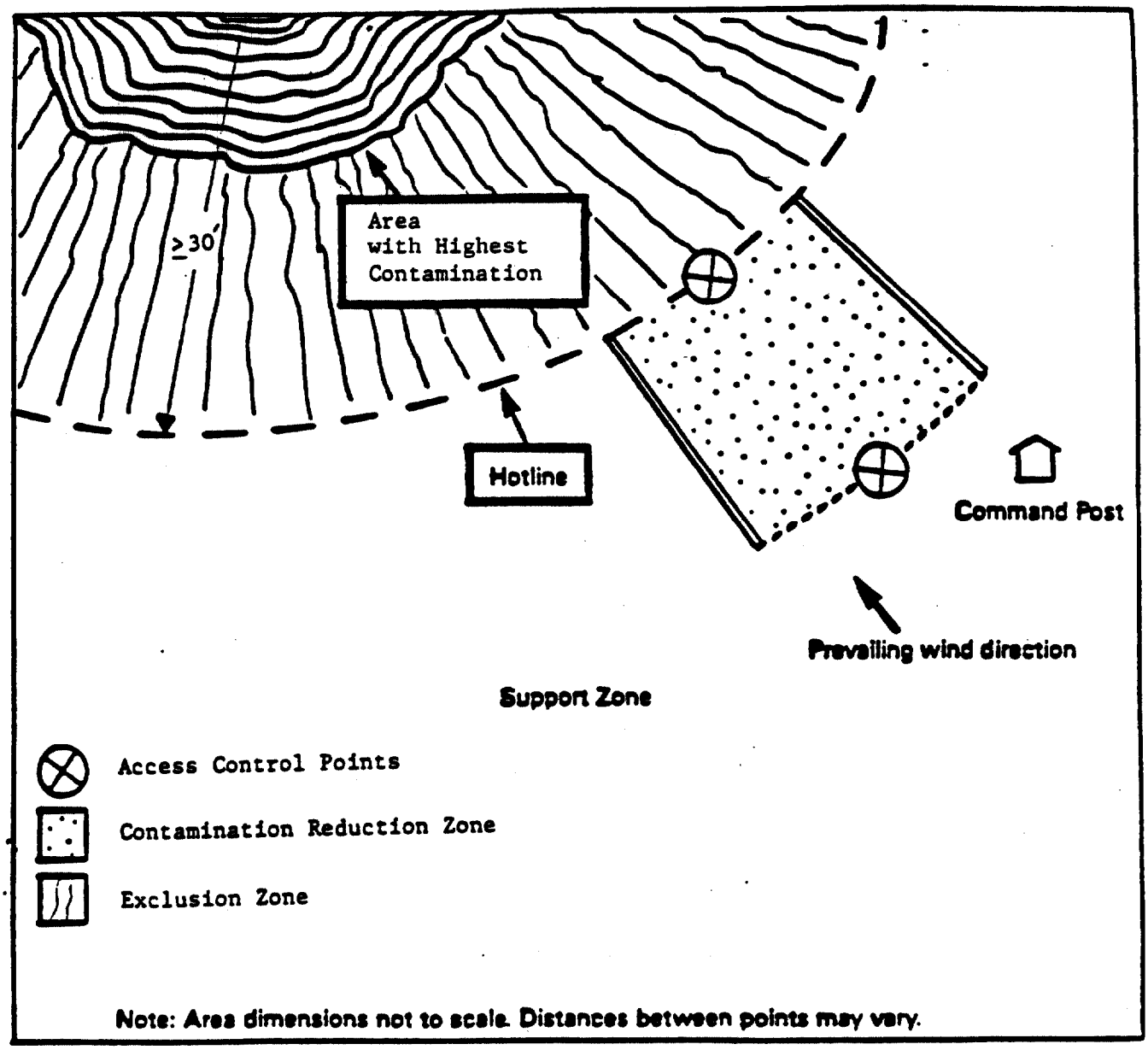

Figure 5 Site Work Zones

6.5.1.2 Contamination Reduction Zone. Between the Exclusion Zone and the Support Zone will be the Contamination Reduction Zone which will provide a transition between the potentially contaminated zone and the clean zone. Zone 2 will serve as a buffer to further reduce the probability of the clean zone becoming contaminated. It will provide additional assurances that the physical transfer of contaminating substances on people equipment, or in the air will be limited through a combination of decontamination, zone restrictions, and work functions. Exit from the Exclusion Zone will be through this Contamination Reduction Zone.

6.5.1.3 Support Zone. The Support Zone will be considered a non-contaminated area. The location of support facilities in the Support Zone and readily accessible to the nearest road. Support facilities (i.e command post. equipment trailer, first aid station,) will be located in this zone. Since normal work clothes are appropriate within this zone, potentially contaminated personal clothing, equipment, and samples are not permitted in this zone.

6.5.1.4 Work Zone Integrity. The integrity of the division of the work zone during duty hours shall be maintained by control of access and egress. Before crossing into another zone, a person will be admitted by the Site Safety Coordinator only after having given proper identification, authorization and certification of required training and medical examinations. The Site Safety Coordinator will record each person's:

- Name
- Status (in or out)
- Time of entry
- Anticipated exit time
- Areas to be entered
- Task to be performed
- PPE worn if applicable

Access to any divisions of the work zone during off-duty hours shall be controlled by security at NWSC. They will be appraised of the work at the site and its hazards and will be instructed in contacting emergency services.

6.5.2 Personal Protective Equipment

6.5.2.1 Proposed Levels of Protection. Modified Level D is prescribed for all activities on this except for the Support Zone, where no level of protection will be required.

Modified Level D protection includes:

- Tyvex disposable coveralls
- Disposable inner and outer gloves
- Chemical-resistant safety boots with steel toes and shanks
- Disposable boot covers
- Hard hat
- Safety glasses or chemical splash goggles
- Hearing protection (if needed)

Monitoring will be periodically performed with a photoionization detection in the breathing zone during all investigation activities to ensure that the level of protection is proper. Upon detection and identification of contaminants by air monitoring surveillance the SSC will, if necessary, upgrade the level of protection to Level C, which requires in addition a full-face, air-purifying, organic vapor, dust, mist canister-equipped respirator.

6.5.2.2 PPE Inspection. All PPE will be inspected by the Site Safety Coordinator prior to being issued to workers on the job. The exception will be individually issued items such as respirators, which are previously fit tested by each individual. The SSC will:

- Inspect and operational testing of newly received equipment
- Inspection of equipment prior to issue to workers
- Inspect multiple-use equipment after use or training and prior to maintenance
- Periodically inspect stored safety equipment

Equipment inspection will follow procedures specified by PPE manufacturers.

The SSC will maintain records of all inspection procedures. Individual identification numbers shall be assigned to all multiple-use pieces of equipment, and records will be maintained by that number. Inspections, will record the ID number, date, inspector's name and findings. Damaged or otherwise objectionable equipment shall be repaired or removed from the job.

6.5.2.3 Donning PPE. A routine will be established for donning PPE. Once the equipment has been donned, fit will be evaluated by the SSC.

6.5.2.4 Work Mission Duration. Before the workers actually begin work in their PPE ensembles, the anticipated duration of their work mission will be established. Several factors will be considered in determining mission length. These include:

- Suit/ensemble permeation and penetration by chemical contaminants.
- Ambient temperatures

6.5.2.5 In-use Monitoring. During equipment use; workers will be encouraged to report any perceived difficulties to their supervision. These difficulties include, but are not limited to:

- Degradation or permeation of PPE
- Perception of odors
- Skin irritation
- Unusual residues on PPE
- Discomfort
- Resistance to breathing (if respirators are worn)
- Fatigue due to respirator use
- Interference with vision or communication
- Restriction of movement
- Personal response such as rapid pulse, nausea, and chest pain

6.5.2.6 Temperature Stress. Site training will address the topics of heat stress and cold stress as presented in (Appendix A).

6.5.2.7 Storage. PPE will be stored properly to prevent damage or malfunction due to exposure to dust, moisture, sunlight, damaging chemicals, extreme temperatures and/or impact. The SSC shall be responsible for proper storage of PPE.

6.5.3 Air Monitoring. A program will be established for the periodic surveillance to detect changes in the areas of investigation sites so as to continually ensure the accuracy of the division of the work area and the adequacy of worker protection. During investigation activities, the Site Safety Coordinator will monitor the work site for (1) combustible gas concentrations and for (2) organic vapors.

6.5.3.1 Combustible Gas Concentrations. During drilling, the SSC will monitor the work area to detect, measure, and document any explosive concentrations of contaminants. Explosion potential measurements will be made using a combination combustible gas/oxygen (CGM) (Neotronics Meter, Exotox Model 40-OFH) and hydrogen sulfide meter. Drill crews shall use the CGM while drilling to determine if any explosive potential exists within the working area. Readings taken at the barrel or opening of the boring are indicative of vapor-gas escape, but may be inaccurate or inconclusive. Readings taken approximately one foot above the source indicate a greater potential for a hazardous condition developing. Readings one foot above a source showing 20% of LEL or greater requires an immediate shut down of operation and area evacuation of the Exclusion Zone until bore readings return to background levels. The Industrial Hygienist (IH) or Safety Office shall be notified to determine further action. All readings shall be recorded on direct reading forms (Appendix B). Potential for oxygen deficient atmosphere is unlikely for the work being conducted. Hydrogen sulfide will generally not be a problem in this project, but any readings greater than 10ppm of Hydrogen Sulfide above a source require an immediate shut down. The IH or Safety Office shall be notified immediately to determine further action.

6.5.3.2 Organic Vapors/Photoionization Indicating Device (PID) The SSC shall use a photoionization detector (HNU Systems Model 101, Hazardous Waste Detector) to monitor the levels of ionizable vapors at the investigation site. Depending on the investigation activity, 1-min measurements will be made in the bore hole, at ground level, and at the worker's breathing zone. The PID will be calibrated relative to benzene concentration or to standards traceable to benzene. In the event that the PID detects a contaminant(s), a 0.5a Draeger tube for benzene will be used to confirm the presence of benzene and its concentration. Benzene will be specifically monitored for each drilling. If benzene is detected, but its concentration is below 5ppm in the breathing zone, work will stop, and the IH or Safety Office will be notified to inquire about donning respirators. If the benzene level exceeds 5ppm in the breathing zone, all personnel will evacuate the Exclusion Zone until bore hole readings return to background values, and the SSC will call the designated Safety Office or IH for further instruction.

If benzene is not detected, the protection level will be based on total organic concentration levels for a 1-min detector reading in the breathing zone. The following protection levels will be used for concentration measurements in the breathing zone:

Concentration	Protection Level or Action
0-5 units above background	Modified Level D PPE will be worn
5-50 units above background	The SSC will suspend work and consult the IH or Safety Office about donning respirators.
>50 units above background	Evacuation of Exclusion Zone

6.5.4 Decontamination

6.5.4.1 Standard Procedures. All personnel, clothing and equipment leaving the Exclusion Zone (if applicable) must be decontaminated to remove any contaminants. Decontamination activities will be conducted in the Contamination Reduction Zone. The location of the Contamination Reduction Zone is shown in Figure 5 Site Work Zone, and its layout is shown in Figure 6. For personnel, the following steps will be taken for decontamination:

Station 1. Deposit equipment (tools, sampling devices and containers, monitoring instruments, clipboard etc.) on plastic drop cloths.

Station 2. Scrub outer boots, outer gloves, and splash suit with decon solution or detergent water. Rinse thoroughly with water.

Station 3. Remove outer boots and gloves. Deposit in a canister lined with a plastic liner.

Station 4. If a worker leaves the Exclusion Zone to change a canister or mask, this is the last step in the decontamination procedure. Obtain a new canister, don new outer gloves and boot covers, tape joints, and return to work.

Station 5. Remove boots, chemical-resistant splash suit, and inner gloves and deposit in separate containers lined with plastic.

Station 6. Remove facepiece/shield, and deposit it on a plastic sheet.

Station 7. Wash hands and face thoroughly. Shower as soon as possible.

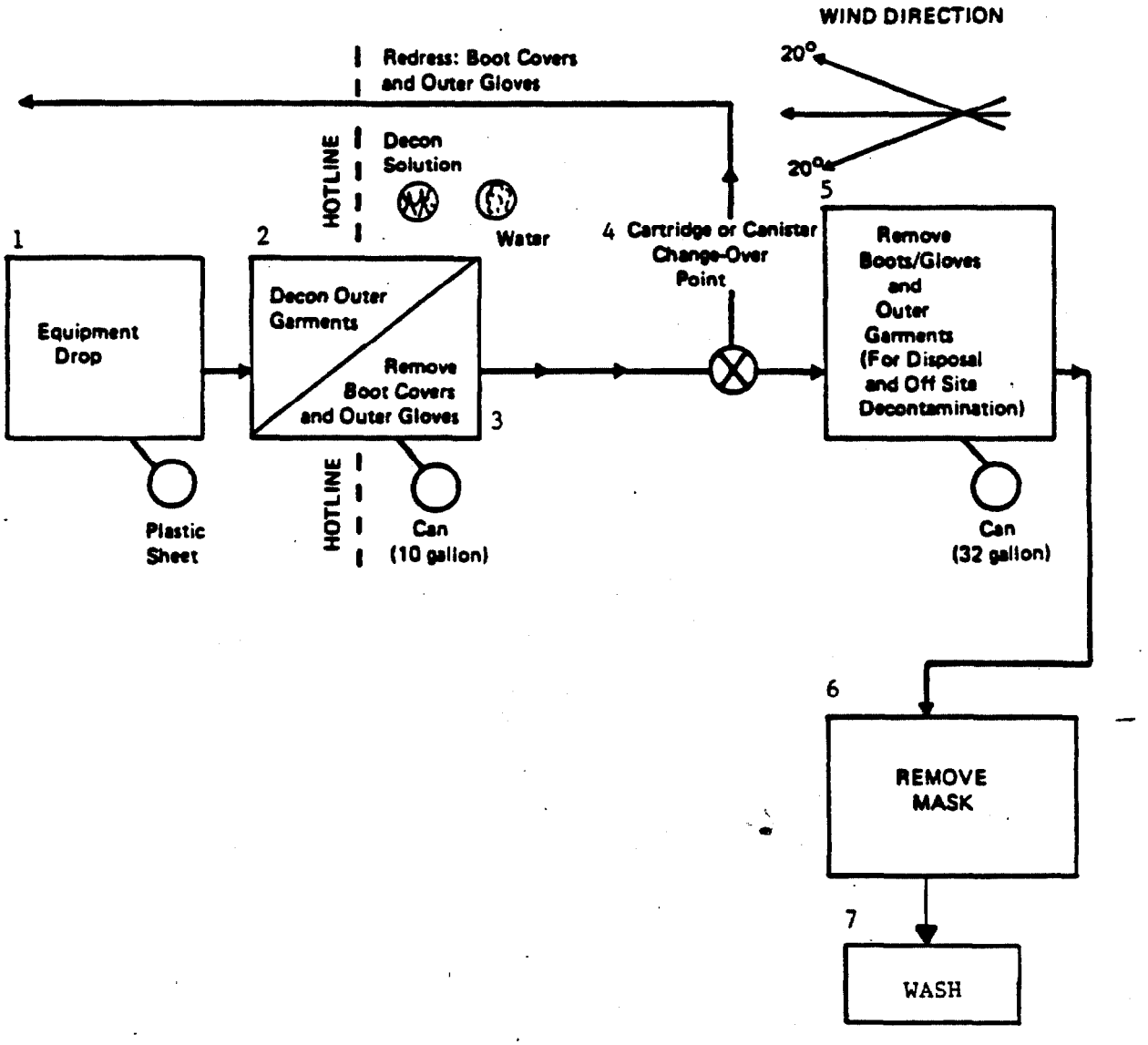

Figure 6 Contamination Reduction Zone Layout

The equipment needed to perform the decontamination steps as follows:

Station 1. Containers of variable sizes
Plastic liners
Plastic drop cloths
Station 2. Containers (20-30 gallons)
Decon solution
Rinse water
2 to 3 long-handled, soft-bristled brushes
Station 3. Container (20-30 gallons)
Plastic liners
Bench or stools
Station 4. Masks and cartridges
tape
Boot covers
gloves
Station 5. Containers (20-30) gallons
plastic liners
Bench or stools
Station 6. Plastic sheets
Wash basin or bucket
Bench and stools
Station 7. Water
Soap
Tables
Wash basin or bucket

For equipment, the following steps will be taken for decontamination:

1. Remove any solid particles from the equipment by brushing and then rinsing with tap water. For drilling equipment , steam cleaning is necessary.

2. Wash equipment with a detergent solution.

3. Rinse with tap water by submerging or spraying.

4. For organic contaminants, an optional rinse with a solvent (methanol or acetone) may be used to dissolve and remove contaminants.

5. Rinse thoroughly with distilled water.

6. Air dry equipment or rinse with methanol.

To protect delicate instruments prior to use in the Exclusion and Contamination Zones, they shall be placed in a clear plastic bag, and the bag shall be taped and secured around the instrument. Openings are made in the bag for sample intake. The plastic bag shall be discarded appropriately in lieu of decontamination.

The supplies needed to decontaminate equipment follows:

- Decontamination solutions.
- Cleaning liquids: detergent solutions, tap water, distilled water, and methanol.
- Chemical-free paper towels.
- Cleaning brushes.
- Cleaning containers; plastic buckets and galvanized steel pans.
- Waste storage containers: drums and plastic bags.

Decontamination solutions and rinses shall be contained collected and stored until they shall be analyzed to determine suitable disposal methods.

6.5.4.2 Emergency Decontamination. If immediate medical treatment is required to save a life, decontamination will be delayed until the victim is stabilized. If decontamination can be performed without interfering with essential first aid , decontamination will be performed immediately.

7.0 Contingency Plan

7.1 Line of Authority. The SSC will be responsible for all decisions relating to site safety. This includes overseeing all the worker protection requirements. The SSC will ensure that all participants conduct their work in accordance with the SSHP, and will direct any employee to leave the site if the employee fails to observe safety requirements or in any way creates a safety hazard. The SSC will be backed up by a specified alternate. Other personnel who may be involved in emergency response will be identified and their respective roles defined: at least two emergency response personnel on the job shall be certified in CPR and First Aid.

7.2 Pre-emergency Planning. The SSC will contact the local hospital emergency room, the local poison control center, and the NWSC security, fire and ambulance services before activities begin. The SSC will inform the hospital emergency and ambulance service of probable emergencies. At the investigation site, the SSC shall ensure that adequate emergency equipment is at the investigation site. This equipment shall include:

- Mobile telephone (optional) And in this project not authorized.
- First Aid Kits
- Portable Eyewash and shower
- Blankets
- Stretchers
- Water in portable containers
- Fire-fighting equipment and supplies
- Level B PPE, available from NWSC

7.3 Fire and Accident Procedures. All employees will be made aware of the fire and accident response procedures by site-specific training prior to start of work. And the available support from the local Crane Spill Response Team (Appendix B, Spill/Emergency Contingency Plan).

7.3.1 Fire Response

1. Report fire

2. Secure equipment and vehicles.

3. Only attempt to extinguish small controllable fires which can be easily controlled with portable fire fighting equipment (i.e 5 lb ABC, Co2) until help arrives, unless imminent danger exists. Evacuation will be necessary whenever an uncontrollable fire threatens health and safety at the site. Notify the NWCS fire department immediately following evacuation.

7.3.2 Accident Response

1. Remove the injured or exposed worker(s) from the immediate danger.

2. If decontamination can be done, first wash, rinse and/or cut off protective clothing and equipment next render first aid as needed, and then call for transport to the hospital.

3. If decontamination cannot be done, first wrap the victim in blankets or plastic to reduce contamination of other personnel. Next alert emergency and off-site medical personnel of potential contamination and instruct them of specific procedures if necessary.

4. Evacuate other personnel from the immediate affected area to a safe location until the Safety Coordinator determines that the site is safe for work to resume.

7.4 Emergency Information

7.4.1 Site Maps. Site maps showing topographic features, prevailing wind direction, work zones, and evacuation routes shall be posted conspicuously at the work site in locations known to all personnel. Site personnel must verify these numbers upon arrival to the site and prior to beginning any activities.

7.4.2 Emergency Telephone Numbers The following list of emergency telephone numbers will be posted conspicuously. And all site personnel will be told their locations. (attached)

EMERGENCY SERVICE/CONTACTS	TELEPHONE NUMBER
- USEPA Environmental Response Team	201/321-6460
- US Coast Guard Environmental Response Team	800/424-8802 686/759-0313 or 759-0357
- Association of American Railroads Response Team	202/293-4048
- Project Manager Robert Magee	919/251-4709
- Health & Safety Officer Paul Albertson	812/854-3447 or 854-1625
- Fire Department NWSC CRANE	812/854-1235 or 854-1333
- Police/Security Department NWSC CRANE	812/854-3300
- State Police Indiana State Police	812/332-4411
- Hospital NWSC CRANE Bedford Medical Center	854-1220 854-1339
- Ambulance On-Site/Off-Site NWSC CRANE LAWRENCE CO.	854-1100 279-6545
- Poison Control Center	800/382-9097

****

Name of Hospital: Bedford Medical Center

Telephone Number: 812/275-1200

Hospital Address: 2900 West 16th St.
Bedford,In. 47432
Route to Hospital (Also, note route on a map and attach to plan)
Left Bedford Gates South, to Bedford, take left on 16th St. on Route 37.
Distance to Hospital: 20 miles

7.5 Emergency Documentation. All incidents involving personal injury shall be investigated and documented so that preventive measures may be taken to avoid similar incidents. At a minimum, the following steps shall be taken:

- Notify the Safety and Occupational Health Office

- Prepare the Accident Report, Eng 3394, in accordance with Corps of Engineers regulations.

- Prevent the work area from being disturbed until the accident investigation is completed.

- Notify NWSC personnel in accordance with their regulations.

8.0 Logs, Records, and Reports The following logs, reports, and records shall be developed, retained and made available to entitled regulatory agencies upon request: (1) Training logs; (2) Medical records; (3) Daily safety meeting reports; (4) Daily air monitoring logs; and (5) Daily safety inspection logs. The daily records for safety meetings, air monitoring, and inspections will be kept in a separate safety and health log book (Appendix B).

9.0 Field SSHP Appendix C contains a condensed version of this SSHP for consultation by Corps of Engineer employees at the work site. Copies of the field SSHP will be made available to each worker and also to the Site Safety Coordinator in addition to the full version of the SSHP.

10.0 Changes to the SSHP The Site Safety Coordinator will submit changes to the SSHP for approval by the District Safety and Occupational Health Office prior to implementing the changes.

11.0 References

(1) U.S Army Corps of Engineers (USACE), Safety and Health Requirements Manual, EM 385-1-1, October 1987.

(2) Occupational Safety and Health Administration (OSHA), Construction Industry Standards, 29 CFR 1926, and General Industry Standards, 29 CFR 1910; 29 CFR 1910.120 " Hazardous Waste Site Operations and Emergency Response ", Federal Register, Vol. 54, NO. 42, dated 6 March 1990.

(3) NIOSH/OSHA/USCG/EPA, Occupational Safety and Health Guidance Manual for Hazardous Waste Site Activities", October 1985.

(4) EPA " Standard Operating Safety Guides", July 1988.

(5) Hawley's , Condensed Chemical Dictionary, 11 Edition, Van Nostrand Reinhold Company, NY. 1987.

APPENDIX A
STANDARD OPERATING PROCEDURES

SOP	TITLE	PAGE
A	SEVERE THUNDERSTORMS/TORNADOES	A-1
B	DRILLING JHA	A-2
C	SNAKE BITE	A-3
D	TEMPERATURE STRESS	A-4

STANDARD OPERATING PROCEDURE A

SEVERE THUNDERSTORMS AND TORNADOES

Meteorological conditions shall be closely watched, especially in the spring, when severe thunderstorms and tornadoes are most likely. Often they occur late in the afternoon on hot spring days, but they can occur at any time of the day in any season of the year. Usually, tornadoes are preceded by severe thunderstorms with frequent lightning, heavy rains, and strong winds.

A severe storm watch or a tornado watch announcement on radio or television indicates that a severe thunderstorm or tornado is possible. No work is permitted in the Exclusion Zone during thunderstorms, severe thunderstorm watches or tornado watches.

A severe thunderstorm warning or a tornado warning signify that a severe thunderstorm or a tornado has been sighted or detected by radar and may be approaching. All work on site shall stop during the time of a severe thunderstorm warning or tornado warning.

Personnel on site during a tornado shall take the following steps:

- Leave office trailers or vehicles.
- If outdoors, lie flat in a nearby ditch.
- Beware of lighting hazards. Stay away from power poles, electrical appliances, and metal objects.
- Do not try to outrun a tornado.

ACTIVITY Earth drilling operations

ANALYZED BY REVIEWED BY DATE

PRINCIPAL STEPS	POTENTIAL HAZARDS	RECOMMENDED CONTROLS
	Hands cut by equipment.	Use of work gloves.
	Dust.	Use of wet drilling techniques or other dust control procedures.
	Foreign object in eye.	Use of goggles.
	Hazardous noise.	Use of hearing protection devices; enrollment, if necessary, in hearing conservation program.
	Hazards of on-line maintenance and repair.	Stop and lockout/block energized equipment; lower mast for repairs. grease/lubrication fittings located at safe positions.
	Contact w/underground utiiities.	Contact utilities/review existing site plans to identify ungerground utilities.
	Climbing/falls from rig.	Use safe means of access; fall protection devices if necessary; clean mud and grease from shoes prior to climbing rig.
	Uncovered boreholes (tripping hazards).	Cap/flag boreholes.
	Operation during electrical storm.	Monitor weather if necessary; cease operations when thunderstorms are impending.
	Hazards w/rod slipping device.	Do not run/rotate drill rods through device; do not hoist more than 1 ft. of drill rod column above the top of the mast; do not hoist a drill rod column which has loose tool joints; do not make up, tighten, or loosen tool joints while the rod column is supported by a rod slipping device.
	Improperly secured/-stored rod sections.	Ensure drill rod columns which are not being used are properly stored and secured.
	Hazardous air due to operation in enclosed areas (incl. trenches).	Air monitoring; compliance with confined space procedures.
	Operator leaving station during rig operation.	Operators required to remain at station at all times of operation.

ACTIVITY Earth drilling operations

ANALYZED BY REVIEWED BY DATE

PRINCIPAL STEPS	POTENTIAL HAZARDS	RECOMMENDED CONTROLS
	Hazards in using hoists (incl. cathead) and wire rope.	Keep the cathead clean and lubricated; periodically inspect rope and keep rope clean; periodically check cathead for rope wear groves; compliance with hoist and wire rope requirements.
	Rope grabbing on cathead.	Release rope and warn others to back away and keep clear of rig; shut down engine and take safe measures to release hoisted load.
	Objects pulled into cathead.	Rope handler shall maintain at least 3 ft. clearance from cathead; keep rope free and untangled.
	Starting/guiding auger.	Use auger guide on hard surfaces; apply adequate down pressure on drill rod to penetrate ground surface prior to starting auger; start auger slowly and watch to ensure a controlled penetration into the ground; if auger head slides out of alignment, stop and repeat process.
	Rotary and core drilling - hydraulic equipment.	Compliance with requirements for hydraulic equipment.
	Rotary and core drilling - general.	Inspect and maintain water swivels, hoisting plugs, and drill rod chuck jaws.

ACTIVITY HAZARD ANALYSIS

ACTIVITY Earth drilling operations ANALYZED BY REVIEWED BY DATE

PRINCIPAL STEPS	POTENTIAL HAZARDS	RECOMMENDED CONTROLS
General	Lack of knowledge in safety requirements and safe use of equipment.	Training in safety requirements (EM 385-1-1); training in manufacturer's literature (e.g., operator,s manual); review of activity hazard analyses.
	Pre-existing physical condition; physically unqualified.	Pre-employment and follow-up physical examinations.
	Unfamiliar with project rules and procedures.	Project safety and health orientation; make accident prevention plan available to employees.
	Exposure to the elements.	Meet minimum clothing requirements.
Traveling	Collision.	Know dimensions/capacities of rig; trained and licensed operators.
	Persons riding rig.	Prohibit persons riding on rig in other than proper seating arrangements.
	Running over objects.	Require use of spotter.
	Moving equipment w/mast up.	Prohibit moving equipment with mast up; interlock to prevent movement of equipment with mast up; warning device to sound when equipment is moved with mast up.
	Traveling on rough terrain.	Survey terrain prior to travel; if necessary, smooth terrain prior to operation; move equipment parallel to slope; use of spotter to identify terrain hazards.
Set-up	Contact w/overhead electrical lines.	Use of proximity warning devices; warning signs; training.
	Unstable ground.	Check ground stability prior to set-up.
	Machinery out of level.	Extend and level outriggers; use of warning device.

ACTIVITY Earth drilling operations ANALYZED BY REVIEWED BY DATE

PRINCIPAL STEPS	POTENTIAL HAZARDS	RECOMMENDED CONTROLS
	Defective equipment.	Pre-operation check of fluids, pressures, clearances, gauges, warning devices, safety devices, operation of controls, belts, hoses, nuts/bolts, drilling fluid levels, etc.
	Two-blocking of hoist.	Anti two-blocking device and alarm.
	Operation of hoists beyond capacities.	Know capacities and loads; use hoists only for their designed intent, not for lifting other materials and personnel.
Drill operations	Personnel caught in machinery during start-up and operation.	Sound alarm to warn persons prior to starting/engaging equipment; proper machine guarding; lubrication points shall be located in safe positions; use long-handled shovels to move auger cuttings away from the auger; clean augers only when the rotation mechanism is in neutral and the auger stopped.
	Contact w/hazardous chemicals agents in soil.	Pre-work surveys to identify previous use of land; soil sampling, if necessary to determine type and concentrations of hazards; use protective clothing.
	Contact with hazardous drilling fluids.	Train workers in hazards of fluids (MSDS); proper protective cothing.
	Defective equipment.	Periodically inspect (same as above).
	Hoisting hazards.	Use slings/chains - don't wrap hoist line around object.
	Clothing/equipment caught in reciprocating equipment.	Don't wear loose clothing, jewelry; keep body parts, rags, tools, etc. away from equipment.
	Tripping (housekeeping) hazards.	Keep work area clean and equipment properly stored/secured
	Striking head, head struck.	Use of hard hats.
	Object falling on foot.	Use of steel-toed safety boots.

STANDARD OPERATING PROCEDURE B

SNAKE BITES

Normally, the noise of a person approaching a snake habitat is sufficient to frighten the snakes off. However, extreme caution is necessary when exploring areas where snakes might be found, such as behind rocks, under bushes, or in holes, crevices, and abandoned pipes.

The rules to follow if bitten by a snake are:

- Do not cut the bite area as it will exacerbate the effect of the venom.
- Do not apply suction to the wound as it is minimally effective in removing venom.
- Do not apply a tourniquet since venom is most dangerous when concentrated in a small area.
- Do not allow the victim to run for help as this allows accelerates circulation.
- Do seek immediate medical attention.
- Do keep the victim calm and immobile.
- Do have the victim hold the affected extremity lower than the body while waiting for medical assistance.

STANDARD OPERATING PROCEDURE C

TEMPERATURE STRESS

- Heat Stress. Wearing PPE puts a hazardous waste worker at considerable risk of developing heat stress. Because heat stress is probably one of the most common illnesses at hazardous waste sites, regular monitoring and other preventative precautions are vital.

To monitor heat stress, the Site Safety Coordinator will have workers count their pulse during a 30-second period as early as possible in a rest period. If the heart rate exceeds 110 beats per minute at the beginning of the rest period, the Site Safety Coordinator will shorten the next work cycle by one-third and keep the rest period the same. If the heart rate still exceeds 110 beats per minute at the next rest period, the Site Safety Coordinator will shorten the following work cycle by one-third.

The frequency of physiological monitoring depends on the air temperature adjusted for solar radiation and the level of physical work (See Table 1.).

The Site Safety Coordinator will take the following preventative steps:

- Adjust work schedules as required in the following ways:

  Modify work/rest schedules according to physiological monitoring results.

  Mandate work slowdowns as needed.

  Alternate job functions to minimize overexertion at one task.

- Perform work during cooler hours of the day, if possible.

- Provide cooled shelter or shaded areas to protect personnel during rest periods.

- Maintain workers' body fluids at normal levels.

- Provide cooling devices to aid natural body heat exchange during prolonged work or severe heat exposure. Cooling devices include:

  Field showers or hose-down areas to reduce body temperature and/or to cool off protective clothing.

  Cooling jackets, vests, or suits.

- Train workers to recognize and treat heat stress. As part of on-site training, identify the signs and symptoms of heat stress (See Table 2.).

Table 1

Suggested Frequency of Physiological Monitoring for Fit and Acclimatized Workers

ADJUSTED TEMPERATURE[b]	NORMAL WORK ENSEMBLE[c]	IMPERMEABLE ENSEMBLE
90°F (32.2°C) or above	After each 45 minutes of work	After each 15 minutes of work
87.5°–90°F (30.8°–32.2°C)	After each 60 minutes of work	After each 30 minutes of work
82.5°–87.5°F (28.1°–30.8°C)	After each 90 minutes of work	After each 60 minutes of work
77.5°–82.5°F (25.3°–28.1°C)	After each 120 minutes of work	After each 90 minutes of work
72.5°–77.5°F (22.5°–25.3°C)	After each 150 minutes of work	After each 120 minutes of work

Source: Reference [13].

[a]For work levels of 250 kilocalories/hour.

[b]Calculate the adjusted air temperature (ta adj) by using this equation: ta adj °F = ta °F + (13 × % sunshine). Measure air temperature (ta) with a standard mercury-in-glass thermometer, with the bulb shielded from radiant heat. Estimate percent sunshine by judging what percent time the sun is not covered by clouds that are thick enough to produce a shadow. (100 percent sunshine = no cloud cover and a sharp, distinct shadow; 0 percent sunshine = no shadows.)

[c]A normal work ensemble consists of cotton coveralls or other cotton clothing with long sleeves and pants.

Table 2

Signs and Symptoms of Heat Stress

- Heat rash may result from continuous exposure to heat or humid air.
- Heat cramps are caused by heavy sweating with inadequate electrolyte replacement. Signs and symptoms include:
  - muscle spasms
  - pain in the hands, feet, and abdomen
- Heat exhaustion occurs from increased stress on various body organs including inadequate blood circulation due to cardiovascular insufficiency or dehydration. Signs and symptoms include:
  - pale, cool, moist skin
  - heavy sweating
  - dizziness
  - nausea
  - fainting
- Heat stroke is the most serious form of heat stress. Temperature regulation fails and the body temperature rises to critical levels. Immediate action must be taken to cool the body before serious injury and death occur. Competent medical help must be obtained. Signs and symptoms are:
  - red, hot, usually dry skin
  - lack of or reduced perspiration
  - nausea
  - dizziness and confusion
  - strong, rapid pulse
  - coma

Table 3

Wind Chill Factor Chart*

Estimated Wind Speed (in mph)	Actual Temperature Reading (°F)											
	50	40	30	20	10	0	-10	-20	-30	-40	-50	-60
	Equivalent Chill Temperature (°F)											
calm	50	40	30	20	10	0	-10	-20	-30	-40	-50	-60
5	48	37	27	16	6	-5	-15	-26	-36	-47	-57	-68
10	40	28	16	4	-9	-24	-33	-46	-58	-70	-83	-95
15	36	22	9	-5	-18	-32	-45	-58	-72	-85	-99	-112
20	32	18	4	-10	-25	-39	-53	-67	-82	-96	-110	-121
25	30	16	0	-15	-29	-44	-59	-74	-88	-104	-118	-133
30	28	13	-2	-18	-33	-48	-63	-79	-94	-109	-125	-140
35	27	11	-4	-20	-35	-51	-67	-82	-98	-113	-129	-145
40	26	10	-6	-21	-37	-53	-69	-85	-100	-116	-132	-148
(Wind speeds greater than 40 mph have little additional effect.)	*LITTLE DANGER* In < hr with dry skin. Maximum danger of false sense of security				*INCREASING DANGER* Danger from freezing of exposed flesh within one minute.				*GREAT DANGER* Flesh may freeze within 30 seconds.			
	Trenchfoot and immersion foot may occur at any point on this chart.											

* Developed by U.S. Army Research Institute of Environmental Medicine, Natick, MA.

Table 4

Symptoms of Cold Exposure

<u>Stages of Frostbite</u>

1. Whitening of skin
2. Waxy skin
3. Skin firm to touch
4. Tissues cold, pale, and solid

<u>Stages of Hypothermia</u>

1. Shivering
2. Apathetic, sleepy, lowered body temperature
3. Glassy stare, slow, pulse, slow breathing, unconsciousness
4. Freezing of extremities
5. Death

- Cold Stress. Cold injury (frostbite and hypothermia) and impaired ability to work are dangers at low temperatures and when the wind-chill factor is low. If the available clothing does not give adequate protection to prevent hypothermia or frostbite, work shall be modified or suspended until adequate clothing is made available or until weather conditions improve. Specifically, for exposed skin, continuous exposure should not be permitted when the air speed and temperature results in an equivalent chill temperature of -25°F (See Table 3.), and at air temperatures of 34.6°F or less it is imperative that workers who become immersed in water or whose clothing becomes wet be immediately provided a change of clothing and be treated for hypothermia.

If work is performed continuously in the cold at an equivalent chill temperature (ECT) below 20°F, heated warming shelters shall be made available nearby; the frequency of use of these shelters shall depend on the severity of the environmental exposure. The onset of intense shivering, frostnip, the feeling of excessive fatigue, drowsiness, irritability, or euphoria, are indications for immediate return to the shelter. When entering the heated shelter, the outer layer of clothing shall be removed and the remainder of the clothing shall be loosened to permit sweat evaporation, or a change of dry work clothing shall be provided. A change of dry work clothing shall be provided as necessary to prevent workers from returning to their work with wet clothing. Dehydration occurs insidiously in cold environments and may increase the susceptibility of the worker to cold injury due to a significant change in blood flow to the extremities. Warm sweet drinks and soups should be provided at the work site to provide caloric intake and fluid volume. The intake of caffeinic beverages shall be prohibited because of diuretic and circulatory effects.

As part of on-site training, workers will be instructed in:

- Proper warming procedures and appropriate first aid treatment.

- Proper clothing practices.

- Proper eating and drinking habits.

- Recognition of impending frostbite.

- Recognition of signs and symptoms of impending hypothermia or excessive cooling of the body (See Table 4.).

APPENDIX B

SPILL CONTINGENCY PLAN

NAVAL WEAPONS SUPPORT CENTER, CRANE, INDIANA 47522

EPA IDENTIFICATION NUMBER - IN5170023498

AMENDED OCTOBER 1988

TABLE OF CONTENTS

SECTION	TITLE	PAGE
I.	Background	1
II.	Purpose and Scope	1
III.	Mission	2
IV.	Who are the Environmental Emergency Coordinators?	2
V.	Duties of Emergency Coordinators	3
VI.	Spill Response Team (SRT)	4
VII.	Authorization Statement	4
VIII.	Identification of Hazardous Materials	5
IX.	Assessment	5
X.	Emergency Plan for Off-Center Spill Incidents	6
XI.	Notification	7
XII.	Evacuation Plan	7
XIII.	Control Procedures	7
XIV.	Storage and Treatment of Release Material	11
XV.	Disposal	11
XVI.	Incompatible Waste	11
XVII.	Prevention of Recurrence or Spread of Fires, Explosions, or Releases	11
XVIII.	Post-Emergency Equipment Maintenance	12
XIX.	Materials and Equipment	13
XX.	Coordination Agreement	13
XXI.	Required Reports	14
XXII.	Amendments to the Contingency Plan	15
XXIII.	Documentation and Cost Accounting	15

TABLE OF CONTENTS (CONT.)

SECTION	TITLE	PAGE

APPENDICES

APPENDIX I - Site Specific Plans.....I-1
APPENDIX II - Fuel Storage Tanks.....II-1
APPENDIX III - Pesticides in Building 2189.....III-1
APPENDIX IV - Phone Numbers for Reporting Spills.....IV-1
APPENDIX V - Emergency Plan for Off-Center Incidents Involving Hazardous Materials.....V-1
APPENDIX VI - Emergency Equipment.....VI-1
APPENDIX VII - Mutual Emergency Assistant Agreements.....VII-1
APPENDIX VIII - Spill Cleanup Contractors.....VIII-1
APPENDIX IX - Map of Facility and Primary Evacuation Routes...IX-1

I. Background:

40 CFR 264.50 and 329 IAC 43 regulations require the preparation of a Spill Contingency (SC) Plan outlining in detail the emergency procedures to be effected if a spill or release of hazardous material occurs which could threaten human health or the environment. OPNAVNOTE 6240 (20 February 1980) and OPNAVINST 5090.1 (26 May 1983) directed all Navy facilities to prepare and submit a Spill Contingency Plan along with a Spill Prevention, Control and Countermeasures (SPCC) Plan and a Hazardous Waste Management Plan.

II. Purpose and Scope:

The purpose of this SC Plan is to provide response procedures for a spill or release of hazardous material and/or waste within the boundaries of the Naval Weapons Support Center Crane (NWSCC), Crane, Indiana. This plan is intended to enable the NWSCC to meet the requirements of Federal and State regulations and Navy instructions concerning hazardous material spills. This plan will be modified as necessary to meet any future requirements.

This plan will be implemented in case of incident within the boundaries of NWSCC wherever hazardous material is spilled or released in an unplanned manner and presents any threat to human health or the environment.

III. Mission

The NWSCC is situated on a 62,463-acre tract of land in southwest Indiana. It is located in the northern portion of Martin County and extends into neighboring Daviess, Greene, and Lawrence Counties.

Crane's mission is to "Provide quality and responsive engineering, technical and material support to the Fleet for combat subsystems, equipment and components; Microelectronic Technology, Microwave Components, Electronic Warfare, Acoustic Sensors Test, Electrochemical Power Systems, Conventional Ammunition Engineering Pyrotechnics, Small Arms, Electronic Module Test and Repair, Electronic Warfare, as assigned by the Commander, Naval Sea Systems Command." Under the Single Service Management Program, a segment of the Center's mission includes support of the Crane Army Ammunition Activity (CAAA). This Army activity is tasked with the production and renovation of conventional ammunition and related items; the performance of manufacturing, engineering, and product quality assurance to

support production; and the storage, shipment, and/or demilitarization and disposal of conventional ammunition and related components.

Approximately 4348 people are employed at NWSCC. Of these, about 747 personnel work for the Army. The Center engages these people in a variety of processes and functions to accomplish the missions of the Navy and Army. A tremendous assortment and volume of hazardous materials are used for this purpose.

IV. Who are the Environmental Emergency Coordinators?
329 IAC 3-43-3(d) and 3-43-6

The primary and alternate Environmental Emergency Coordinators (EEC) listed in this section are available at all times, either on-site or on-call, to coordinate emergency spill response measures. If they are unavailable, the Fire Division shift captain will act as On-Scene Commander (OSC) until the Environmental Protection Branch Manager or alternates arrives on the scene. In cases where a fire involved, the OSC will remain in charge until the fire is controlled. At that time, the OSC can transfer command to the EEC.

Three Indiana Page Beepers have been assigned to the Environmental Protection Branch (Code 0924) so that Code 0924 personnel can be reached in transit to and from work and during off-work hours.

Process for using the Beepers is:

-Dial number assigned to the beeper Wats 701_____

-It will ring 2 times and then you will hear 3 computer beeps.

-Key in the phone number you want the person to call and follow up with the # sign.

-It will then beep and you will get a busy signal. Hang up.

-It is then in the computer and the beeper will be notified.

Each person listed below is thoroughly familiar with this plan as well as operations and activities of the regulated units listed in Appendices I, II, and III. Each person has the authority to commit the resources necessary to carry out this plan.

Primary Contact: NWSCC Environmental Protection Branch Manager, Jim Hunsicker (Code 0924), work phone 812-854-1132 or 3114. Home address: 408 12th St., Huntingburg, IN 47542, home phone 812-683-3323. To make contact by beeper dial 7-0-1-278-2447.

Alternate: NWSCC Environmental Protection Assistant, Phil Keith (Code 09247), work phone 812-854-3114 or 1132. Home address: 2526 North 14 1/2 Street, Terre Haute, IN 47804, home phone: 812-466-7592. To make contact by beeper dial 7-0-1-278-2441.

2nd Alternate: NWSCC Environmental Protection Assistant, Jerry McCracken, (Code 09241), work phone 812-854-3114 or 1132. Home address: R.R.#1, Box 55, Bloomfield, IN 47424, home phone: 812-384-3073.
To make contact by beeper dial 7-0-1-278-2445.

3rd Alternate: NWSCC Fire Division Shift Captain, work phone 1235. Below is a list of potential shift captains.

Name	Title	Address	Phone # (Area Code 812)
David Anderson	Asst. Fire Chief	Box 71 Sandborn, IN 47578	694-8879
Larry Wools	Asst. Fire Chief	P.O. Box 118 Linton, IN 47441	847-9593
C. Scott Wolfe	Fire Captain	R. R. #1 Loogootee, IN 47558	295-3694
James W. Wires	Fire Captain	R. #3, Box 36 Orleans, IN 47452	849-4195
Sam Wilcoxen	Fire Captain	R. R. #1, Box 205 Milltown, IN 47145	633-7525
Phillip Burger	Fire Captain	R. R. #2, Box 218 Bloomfield, IN 47424	384-4000

V. Duties of Emergency Coordinators:
329 IAC 3-43-6 and 3-43-7

The primary duty of the EEC is to coordinate and supervise all spill response efforts. This includes:

A. Notifying and organizing the spill response team and other needed personnel.

B. Enacting further spill containment procedures.

C. Identifying the type/chemical composition of the spill.

D. Evacuating and securing the area of the spill as necessary.

E. Notifying or Reporting spill to the DUTY OFFICER AND COMMANDING OFFICER. The EEC will also contact the NATIONAL SPILL RESPONSE CENTER, INDIANA DEPARTMENT OF ENVIRONMENTAL MANAGEMENT and outside authorities in the community (State Police, local hospitals and Local Emergency Planning Commissions) as necessary. Telephone numbers for aforementioned personnel and Agencies is found in Appendix IV.

F. Initiation of spill cleanup and equipment decontaminatio.

VI. Spill Response Team (SRT):

A. Drills: Routine drills and exercises in spill containment procedures involving key personnel will be performed periodically.

B. The regular members of the SRT will include the following:

1. Environmental Protection Branch Manager, who serves as the EEC (extension 3114/1132);

2. Hazardous Waste Handlers (extension 1192 or page by dialing extension 3125, then dial 236 or 240 after beeping tone stops);

3. Environmental Protection Assistants;

4. Public Works shops personnel, Codes 04, 104, EOD, 10, Disaster Preparedness Team, or other personnel will be noti~ied according to the discretion of the OSC and/or the EEC.

VII. Authorization Statement: 329 IAC 3-43-6

The EEC and the OSC have the authority to call in any personnel (EOD, Public Works, Industrial Hygiene, Safety, etc.) needed in an emergency situation. In situations where the EEC and the OSC have assessed that a release, fire or explosive threatens human health or the environment outside the facility, the Captain should be advised of the situation simultaneously as outside officials are being notified. If a spill cleanup contractor is to be called in, the Captain, Technical Director, and Public Works Officer should be notified and advised of the decision, and)he contractor contacted. If the Captain, Technical Director or the Public Works Officer are not available, the OSC or EEC will proceed with contacting and requesting the services of a contractor.

VIII. Identification of Hazardous Materials: 329 IAC 3-43-7(b)

A. If there is a release, fire, or explosion, the EEC will immediately identify the character, exact source, amount and areal extent of any released materials to the extent possible with respect to the release circumstances.

B. If the identity of the spill material is not known or relayed by the report of the spill, the EEC may be able to determine the identity on the basis of the location of the material and knowledge of the related processes in its vicinity. The Environmental Protection Branch has data files of processes and storage areas involving hazardous wastes/materials throughout the Center. This information file will also be of assistance in determining the exact source of the spill. Identification of spilled material can also be made by actual observation or production records to determine what materials are being used by process. Samples may be taken to verify the identity of the released material. Analysis could be received back if analyzed: on-Center - 24 hours; off-Center - 48 hours.

C. A member of the Center's spill response team will be dispatched by the EEC to determine or verify the reported volume of the spill, as well as to investigate the cause of the release, through observation and discussions with key personnel in the area. If a spill occurs locally during transit of a hazardous waste/material, logs and/or manifests and label information will provide data on the identity, volume and source of the spill.

IX. Assessment: 329 IAC 3-43-7(c) and (e)

A. Concurrently while identifying the character, exact source and areal extent of any released materials the EEC will assess possible hazards to human health and the environment due to emergency incident. This assessment would be developed through consultation and coordination with representatives from NWSCC's Safety, Medical, Fire, and Security Departments and the Explosive Ordnance Disposal detachment. The assessment should address:

1. Direct and indirect results from the release, fire, or explosion;

2. Effects of any toxic, irritating or asphyxiating gases that are generated;

3. Effects of any hazardous surface water run-off from water or chemical agents used for fire control.

B. The following resources would be reviewed by the assessment group to complete the hazards assessment:

1. Material Safety Data Syeets for material involved in incidents, to determine decomposition by-products;

2. Chemical reference documents such as Sax Dangerous Properties of Industrial Materials, Merck Index, Condensed Chemical Dictionary, Lange's Handbook of Chemistry, and Emergency Handling of Hazardous Materials;

3. Analytical data that is available for material spilled.

C. The assessment group would also have to evaluate means of egress and direction for any spill or gas/smoke cloud to leave the facility to determine what areas would have to be evacuated. After reviewing the situation and determining that a release (spill, fire or explosion) has occurred which can affect human health and the environment outside facility boundaries, the following notifications would be made:

1. Outside notification of state or local police, local hospitals in Bloomington, Linton, Vincennes, Jasper, Washington, or Bedford, will be made by the OSC or EEC. The hospitals will be advised by the Center's medical staff of any related injuries resulting in transportation of injured parties to the hospital for treatment;

2. If areas outside the Center must be evacuated, and traffic rerouted, the state police will be advised of such by the EEC, as well as the nature of the hazards involved;

3. The EEC will immediately notify either the government official designated as the on-scene coordinator for that geographical area, (in the applicable contingency plan under 40 CFR Part 300) or the National Response Center, the Indiana Department of Environmental Management's 24-hour emergency number and the Martin County Sheriff's Department and will seek outside assistance from these agencies as necessary. The key telephone numbers for emergency spill response are found in Appendix IV.

X. Emergency Plan for Off-Center Spill Incidents:

Appendix V is a formal Center instruction establishing an emergency action plan for off-Center incidents involving hazardous materials shipped by a government vehicle, or a private carrier dispatched by the Supply Department, or where the Center is the nearest government activity and assistance is requested.

XI. Notification: 329 IAC 3-43-7(a)

If an imminent or an actual situation should occur, the EEC will immediately: Activate or cause to be activated internal alarms and/or communications systems in order to notify operating personnel and will notify or cause to be notified appropriate contingency response agencies if their help is needed. As soon as possible, the Indiana Department of Environmental Management and the National Response Center will be notified. Their phone numbers are found in Appendix IV.

The following information should be available at time of call:

A. Type of material spilled;
B. Time of spill;
C. Waterway/stream affected;
D. Amount spilled;
E. Count facility located in.

XII. Evacuation Plan: 329 IAC 3-43-3(f)

Appendix IX contains a map of the facility and Primary Evacuation Routes. Site specific evacuation plans are posted in every occupied building on Center.

XIII. Control Procedures: 329 IAC 3-43-7(e)

The operations at NWSCC are so varied and complex that it is difficult to be all inclusive in one plan, therefore, site specific plans are included in Appendix I. The provisions of this plan will be carried out immediately whenever there is a fire, explosion, or release of hazardous waste, hazardous material, or hazardous waste constituents at any of the units listed in Appendices I, II, or III, which could threaten human life or the environment. The EEC will take all measures necessary to contain the incident within the affected area, and will notify the appropriate personnel. Furthermore, a Disaster Preparedness Oil and Hazardous Substances Spill Contingency Plan and Oil and Hazardous Substances Response Plan for NWSCC is enclosed as Appendix X. Descriptions of control and containment procedures of some potential incidents follow:

A. Explosion: In the event of an explosion, operation of the affected unit will be ceased immediately and the Fire Department and Explosive Ordnance Disposal Group Two Detachment (EOD) will be notified of the incident. Operation will not resume until the cause of the explosion has been determined;all repairs, if any, have been completed; and approval to resume operations has been obtained.

B. Fire: In the event of a fire, NWSCC Fire Department and the EEC will be notified immediately. The Fire Chief will be considered On-Scene Commander (OSC) until the fire is brought under control and spill cleanup/containment can begin. The EEC or his alternate will advise the OSC during the fire what action is needed to contain the spill. Such actions as building dams downstream from the fire will be done to collect runoff generated while fighting the fire. Once the fire is out the OSC will transfer authority for cleanup of the area to the EEC. At the discretion of the OSC, non-essential personnel may be evacuated from the immediate area. No operations will be resumed until inspection and approval is obtained from the EEC and/or OSC.

C. Spill: A spill of hazardous waste at any of the buildings listed in Appendices I, II, and III, or along a haul road used to move wastes could occur. However, due to posted speed limits, hazardous waste handling procedures, and safety precautions, spills are unlikely. If a spill does occur, the following procedure would be initiated:

1. Immediately notify the NWSCC Fire Department. The OSC will transfer command to the EEC once it is determined that an imminent threat to human health or safety no longer exists;

2. Notify the EEC immediately after notifying the NWSCC Fire Department;

3. Assess the extent of surface contamination to determine if a hazardous situation exists. The EEC will assess possible hazards to human health or the environment due to the emergency incident. The assessment will consider the short-term and long-term effects of the event. Examples of long-term effects could include effects of toxic gases generated or effects of run-off generated by fire fighting;

4. If the EEC determines that the incident could be harmful to personnel, he may order evacuation of the affected area. Personnel will not return to affected ?

5. Some of the hazardous wastes are in solid form and do not migrate after the spill. A solid waste spill would be cleaned up, and a report documenting the event and cleanup measures would be submitted by the EEC the next day. The operation would not restart until the EEC or his alternate has determined that the spill has been properly cleaned and has given approval for restart of operation;

5090/H11.9
0924

06 SEP 1990

Revised RFI Phase II Soils Work Plan for Old Rifle Range Appendix B Spill Contingency Plan Page 9 is missing from the original document.

2. If possible, stop the leak by plugging the hole. For a leaking drum, place the drum on its side with hole or leaking area up, put down absorbent (oil dry) or absorbent pads;

3. Select a compatible container to transfer leaking material into. For waste streams handled on a continuous basis Code 0924 knows what drums are compatible. This information is also available from MSDSs, Bureau of Explosives, Tariff No. BOE-6000, and Dangerous Properties of Industrial Materials by N. Irving Sax and Richard J. Lewis, Sr.;

4. Decontamination and/or neutralization of the area where the spill occurred. As examples, in some cases you may use soap and water to decontaminate or caustic soda;

5. Any contaminated material which cannot be decontaminated will be removed and disposed of as hazardous waste;

6. Certification that the area is clean and can be used again.

E. Major Malfunction of Process Equipment: If a major process equipment item should malfunction, that item would immediately be shut down according to SOP's, and the EEC would be notified. If no threat to human health or the environment exists, and if there is otherwise no reason to remain in a shut-down condition, the proper craftsmen would be notified and remedial action would begin. Operation of the item would not resume until certified safe by the EEC and the Safety Department. Examples of malfunctions could include leaking pumps, ruptured pipes, leaking tanks, etc.

F. Severe Weather Conditions: Occasional severe weather may threaten safe cleanup operations. If severe weather should threaten, waste handling operations would be discontinued.

If any of the aforementioned potential incidents occur, the EEC would monitor for leaks, pressure buildup, gas generation, or ruptures in equipment whenever appropriate. During an emergency, the emergency coordinator will take all reasonable measures necessary to ensure that fires, explosions, and releases do not occur, recur, or spread to other hazardous wastes at the facility. These measures will include, where (pplicable, stopping processes and operations, collecting and containing released waste, and removing or isolating containers.

XIV. Storage and Treatment of Release Material: 329 IAC 3-43-7(g)

All recovered wastes, contaminated soil, water, or other substances affected by the emergency incident will be collected to the extent possible, placed in compatible containers, and eiter treated or stored as appropriate in NWSCC's permitted hazardous waste facility.

XV. Disposal: 329 IAC 3-43-7(g)

Waste material generated in a spill cleanup will be turned over to Code 0924 for disposal via the Center's Hazardous Waste Disposal Contractor. All hazardous wastes are stored at Building 2993 while awaiting pickup by contractor for disposal.

XVI. Incompatible Waste: 329 IAC 3-43-7(h)(1)

A. In the case of an emergency incident which results in the recovery of wastes, contaminated soil or water, decontamination solution, or other collected materials, such collected materials will be stored, treated or disposed of with respect to compatibility.

XVII. Prevention of Recurrence or Spread of Fires, Explosions, or Releases: 329 IAC 3-43-7(e), (f), (g), and (h)

During an emergency, the EEC will take all reasonable measures necessary to ensure that fires, explosions, and releases do not occur, reoccur, or spread to other hazardous waste at the building. These measures will include, where applicable, stopping processes and operations, collecting and containing releasedwaste, and removing or isolating containers.

The follow-up actions for the EEC are:

A. Investigate the cause of the emergency and submit a formal report to Command within 48 hours;

B. Fire and Accident reports will be submitted;

C. Ensure that proper restoration actions are instituted as soon as possible after decontamination and clean up procedures have been completed. All decontaminationand clean up records will be submitted to the EEC;

D. Ensure that equipment repaired or replaced as a result of an incident is recertified, as necessary, prior to being placed in service;

E. Within 15 days notify Naval Facilities Engineering Command, the Naval Sea System Command, as well as the Commissioner of the Indiana Department of Environmental Management (IDEM) and the EPA Regional Administrator;

F. The EEC must notify the Commissioner of IDEM and appropriate local authorities that the facility is in compliance with, 329 IAC 3-43-7(h) and (i), and 40 CFR 264.56(h) and (i), before operations are resumed in the affected area(s) of the facility;

G. Immediately after an emergency, the EEC and/or OSC will provide for collection, storage, treatment and disposal of recovered waste, contaminated soil and any other material that results from the incident. This waste will be handled as hazardous waste until a chemical analysis can be obtained that proves otherwise. Emergency/Spill residue will be placed in compatible containers and either treated or stored in a permitted/interim status NWSCC hazardous waste storage facility. Any hazardous waste from emergency situations requiring disposal will be sent by NWSCC to and off-site RCRA permitted TSD facility;

H. If waste from an emergency situation is found by analysis to be considered a Special Waste, approvals for disposal and recommended disposal sites will be sought by NWSCC from the IDEM.

XVIII. Post-Emergency Equipment Maintenance: 329 IAC 3-43-7(h)(2)

Any emergency equipment used in response to an emergency incident covered by this Contingency Plan will be cleaned and certified fit for its intended use by the EEC before operations are resumed. This will be accomplished by:

A. Having Industrial Hygiene prescribe procedures for cleaning all respirators and breathing apparatus. After equipment (respirators etc.) have been decontaminated, Industrial Hygiene will be asked to visually inspect each item and certify if it is fit for intended use;

B. Having all boots, coats, etc. decontaminated and inspected for wear and damage;

C. Having all rubber gloves, Tyveks, etc., collected and handled as hazardous waste;

D. Having pumps, shovels, lifting mechanisms, and other equipment decontaminated, inspected by Safety and the EEC and put back in service.

NWSCC Safety and Industrial Hygiene Departments will play a large role in certifying emergency equipment fit for reuse. If there

is any question about a piece of equipment being fit for reuse, it will be discarded or sent back to the manufacturer (if possible) for recertification.

XIX. Materials and Equipment: 329 IAC 3-43-3(e)

Each department on-Center which handles hazardous material in their programs must have equipment to use for immediate response. This equipment and material, as a minimum, should include a transfer pump (of chemically compatible material), absorbent, and empty container(s) on hand to hold spilled material or contaminated absorbent. Safety eye washes and showers and alarm systems should be checked at least weekly to determine if they are functional. Industrial Hygiene can provide protective gear for personnel, and the Public Works' Environmental Protection Branch (Code 0924) has protective gear for use in material handling. Disaster Preparedness has available a large inventory of protective gear to be used if authorized. This equipment includes respirators, coveralls, boots, and gloves. The EEC, EOD Team and Industrial Hygiene have chemical-resistant Tyvek suits suitable for use in handling toxic, skin-absorbed materials or corrosive materials. See Appendix IV for phone numbers.

A variety of equipment for containment, control, cleanup, and decontamination is available. The Public Works Department has loaders, bulldozers, dump trucks, pumps, and tank trucks. Disaster Preparedness has decontamination apparatuses available, trucks, and decontamination chemicals for use if authorized. Code 0924 has a variety of pumps available for cleanup of spills as well as tank patch kits. Absorbent is available from Storeroom 2 or Code 0924. For a complete listing of items, see Appendix VI of this plan.

Facilities are available from the EEC or Disaster Preparedness personnel for decontamination. Showers (portable) and cleaning equipment can be assembled on site, if needed.

The OSC will use the Disaster Preparedness mobile communications van with self-contained generators for 110-volt power as needed. The van is equipped with two-way radios on the frequencies used for mobile communications on-Center, citizens band, and shortwave. Many vehicles assigned to the departments are equipped wity two-way radios, and portable hand-held units are available in Public Works and other departments and can be used for reporting observations in areas remote from a road.

XX. Coordination Agreement: 329 IAC 3-43-3(c) and 3-42-7

As necessary, for major spill incidents, the Center will seek the assistance of community groups (local fire departments, state police, and hospital services). Mutual aid agreements entitled, "Mutual Aid Fire-Fighting Assistance Agreement", have been established between NWSCC and the following:

Martin County (Indiana) Civil Defense, Fire and Rescue
Crane (Indiana) Volunteer Fire Department
Indiana Division of Forestry
Richland-Taylor Township (Indiana) Volunteer Fire Department
Perry Township (Indiana) Volunteer Fire Department
Loogootee (Indiana) Volunteer Fire Department
Odon (Indiana) Volunteer Fire Department
Owensburg (Indiana) Fire Fighters, Inc.
Daviess County Sheriff's Department
Greene County Sheriff's Department
Lawrence County Sheriff's Department
Martin County Sheriff's Department
Indiana State Police Department

A copy of NWSCC's Spill Contingency Plan has been provided to each of the following organizations/hospitals:

Martin County Sheriff's Department
Good Samaritan Hospital, Vincennes, Indiana
Greene County General, Linton, Indiana
Bedford Medical Center, Bedford, Indiana
Bloomington Hospital, Bloomington, Indiana
Daviess County Hospital, Washington, Indiana
Memorial Hospital and Health Care, Jasper, Indiana
Dunn Memorial Hospital and Health Care, Bedford, Indiana

Documentation concerning these agreements, arrangements, letter to Hospital and responses is found in Appendix VII.

At the present time NWSCC does not have agreements with any specific contractor(s) for cleanup of spills. Appendix VIII is a list that would be used to locate or hire a cleanup contractor.

XXI. Required Reports: 329 IAC 3-43-7(j)

The EEC will note in the operating record the time, date, and details of any incident that requires implementing the contingency plan. Within fifteen (15) days after the incident he must submit in a written report on the incident to the commissioner. The report must include:

A. Name, address, and telephone number of the owner or operator;

B. Name, address, and telephone number of the facility;

C. Date, time, and type of incident, e.g. fire, explosion;

D. Name and quantity of material(s) involved;

E. The extent of injuries, if any;

F. An assessment of actual or potential hazards to human health or the environment, where this is applicable; and

G. Estimated quantity and disposition of recovered material that resulted from the incident.

XXII. Amendments to the Contingency Plan: 329 IAC 3-43-5

The EEC will be responsible for reviewing and immediately amending the Contingency Plan, if necessary, whenever:

A. The facility RCRA permit is revised;

B. The plan fails in an emergency;

C. The facility changes in its design, construction, operation, maintenance, or other circumstances in a way that substantially increases the potential for fires, explosions, or releases of hazardous waste or hazardous waste constituents, or changes in the response necessary in an emergency;

D. The list of emergency equipment changes (minor permit modification); or

E. The list of Emergency Coordinators changes (minor permit modification).

XXIII. Documentation and Cost Accounting:

A. The OSC will maintain a log of all activities related to the spill with times and locations noted in detail. A hand-held recorder (available from Code 0924) will be used for noting details under field conditions where hand writing of notes is slow and cumbersome and may cause loss of pertinent details.

B. Cost accounting will be handled by the Center charge number and accounting system. This system provides separate accounting of labor and material.

AIR MONITORING WORKSHEET

DATE: ________________

Site: ____

Activity:
____Drilling ___Soil/Gas ___Groundwater Sampling___ Other (explain)
____

Instrument:
(P) - Photoinization Meter, Type_______ Unit/Model______ Calibration______
(C) - Combust Gas/O_2 Meter, Type_______ Unit/Model______ Calibration______
(HS)- Hydrogen Sulfide, Type_______ Unit/Model______ Calibration______
(DT)- Detector Tubes, Type_______ Unit/Model______ Calibration______

Monitoring Requirements: ____
____

General Comments: ____
____

READINGS:

Time	Instr.	Reading	Location	Comments

Prepared by ______________________________

APPENDIX C
Table of Contents

Appendix C contains information on the chemicals/compounds previously identified in the areas to be investigated. The tables in the appendix contain physical and chemical property data, hazard information, and toxicological data for the chemical/compound.

1. Arsenic
2. Barium
3. Cadmium
4. Chromium
5. Cyclonite (RDX)
6. HMX
7. Lead
8. Mercury
9. Phenol
10. Selenium
11. Silver
12. 2,4,-6trinitrotoluene

Derivation: Sulfonation of naphthalene with fuming sulfuric acid at low temperature followed by separation from the 1,6-isomer.
Use: Dye intermediate.

Arndt-Eistert synthesis. Procedure for converting an acid to its next higher homolog.

"Arnel."[352] TM for an acetate fiber made from cellulose triacetate. It has a higher melting point, and is less soluble than cellulose acetate.
See acetate fiber, cellulose triacetate.

"Arnox"[245]. TM for a family of 1-component liquid and solid epoxy resins designed for compression and transfer molding, injection molding, filament winding and pultrusion.

aromatic. (arene). A major group of unsaturated cyclic hydrocarbons containing one or more rings, these are typified by benzene which has a 6-carbon ring containing three double bonds. The vast number of compounds of this important group derived chiefly from petroleum and coal tar are rather highly reactive and chemically versatile. The name is due to the strong and not unpleasant odor characteristic of most substances of this nature. Certain 5-membered cyclic compounds such as the furan group (heterocyclic) are analogous to aromatic compounds. *Note*: The term "aromatic" is often used in the perfume and fragrance industries to describe essential oils which are not aromatic in the chemical sense.

aromaticity. A stable electron shell configuration in organic molecules, especially those related to benzene.
See resonance, orbital theory.

aromatization. See hydroforming.

"Aromin."[51] TM for a highly aromatic solvent widely used as a carrier for chemical pesticides.

Arrhenius, Svante. (1859–1927) A native of Sweden, he won the Nobel prize in chemistry in 1903. He is best known for his fundamental investigations on electrolytic dissociation of compounds in water and other solvents, and for his basic equation stating the increase in the rate of a chemical reaction with rise in temperature:

$$\frac{d \ln k}{dT} = \frac{A}{RT^2}$$

in which, k is the specific reaction velocity, T is the absolute temperature, A is a constant usually referred to as the energy of activation of the reaction, and R is the gas law constant.

arsacetin. (sodium acetylarsanilate; sodium p-acetyl aminophenylarsonate).
$CH_3CONHC_6H_4AsO(OH)ONa$.
Properties: White, crystalline powder; odorless; tasteless; free of arsenous or arsenic acid; solutions will admit of thorough sterilization. Soluble in cold water, but more so in warm water.
Use: Medicine (antisyphilitic).

arsanilic acid. (atoxylic acid; p-aminobenzenearsonic acid; p-aminophenylarsonic acid).
$C_6H_4 \cdot C_6H_5AsNO_3$.
Properties: White, crystalline powder; practically odorless; soluble in hot water; slightly soluble in cold water, alcohol, and acetic acid; insoluble in acetone, benzene, chloroform, and ether. Mp 232C.
Derivation: By condensing aniline with arsenic acid removing the excess of aniline by steam distillation in alkaline solution and setting the acid free by hydrochloric acid.
Hazard: Yields flammable vapors on heating above melting point. A poison.
Use: Arsanilates, manufacture of arsenical medicinal compounds such as arsphenamine, etc., veterinary medicine, grasshopper bait.

arsenic. As. CAS: 7440-38-2. A nonmetallic element of atomic number 33, group VA of Periodic Table, aw 74.9216, valence=2,3,5; no stable isotopes.
Properties: Silver-gray, brittle, crystalline solid that darkens in moist air. Allotropic forms: black, amorphous solid (β-arsenic), yellow, crystalline solid, d 5.72 (commercial product ranges from 5.6 to 5.9), mp 814C (36 atm), sublimes at 613C (1 atm), Mohs hardness 3.5, insoluble in water, caustic and nonoxidizing acids. Attacked by hydrochloric acid in presence of oxidant. Reacts with nitric acid. Low thermal conductivity; a semiconductor.
Derivation: Flue dust of copper and lead smelters from which it is obtained as white arsenic (arsenic trioxide) in varying degrees of purity. This is reduced with charcoal. The commercial grade is not made in US.
Grade: Technical, crude (90–95%), refined (99%), semiconductor grade 99.999%, single crystals.
Hazard: Carcinogen and mutagen. TLV OSHA standard for employee exposure is 10 μg/m3 of air. Respirators required for worker exposure to atmospheres of over 500 μg/m3. ACGIH TLV is 200 μg/m3 (arsenic and soluble compounds).
Uses (metallic form): Alloying additive for metals, especially lead and copper as shot, battery grids, cable sheaths, boiler tubes. High-purity (semiconductor) grade: used to make gallium arsenide

for dipole
agent in g
ucts, spec
See also ar

arsenic acid.
CAS: 777
Arsenic p
senic acid
Properties:
water, alc
35.5C, bp
Derivation:
acid.
Grade: Pur
Use: Manu
wood tre
desiccant

arsenical B

arsenical ni

arsenic anhy

arsenic, blac

arsenic bron
bromide.

arsenic chlo

arsenic disu
senic; re
red arsen
AsS.
Properties:
and alkal
mp 307C
Deviation:
rites and
Grade: Te
Use: Leath
ment, sho
cide, taxi

arsenic hyd

arsenic pent
−52.8C,
in alcoho
Use: Dopin

arsenic pent
Properties:
nitric aci
composes
heated.
Derivation
a hydroch
fide. It is

hesives, fertilizers, roofing granules, putties, caulking compounds, etc.

Bardhan-Sengupta phenanthrene synthesis. Formation of octahydrophenanthrene derivatives by cyclodehydration of derivatives of 2-(β-phenethyl)-1-cyclohexanol and consequent dehydration to phenanthrenes with selenium.

bar disintegrator. See cage mill.

Bardol[175]. TM for a coal-tar oil with aromatic content.
Properties: Dark-colored liquid, d 1.07–1.12 (25/25C), distillation at 300C 60% max, low viscous at 4.4C. Combustible.
Use: Swelling agent for natural and synthetic elastomers, dispersing agent for blacks and mineral fillers, tackifier, plasticizer.

Barfoed's reagent. Aqueous solution of copper acetate.
Use: To distinguish monosaccarides from disaccharides (red cuprous oxide forms in presence of glucose).

barite. ($BaSO_4$). Natural barium sulfate, barytes, heavy spar.

barium. CAS: 7440-39-3. Ba. Alkaline-earth element of atomic number 56, Group IIA of Periodic Table; aw 137.34; valence 2; 7 stable isotopes.
Properties: Silver-white, somewhat malleable metal, d 3.6, values for melting and boiling points are reported ranging from 704C to 850C for mp and from 1140C to 1637C for bp. The most acceptable values based on reliable original work appear to be mp 710C and bp 1500C. Extremely reactive, reacts readily with water, ammonia, halogens, oxygen, and most acids. Gives green color in flame. Extrudable and machinable.
Occurrence: Ores of barite and witherite are found in Georgia, Missouri, Arkansas, Kentucky, California, Nevada, Canada, Mexico.
Derivation: Reduction of barium oxide with aluminum or silicon in a vacuum at high temperature.
Forms: Rods, wire, plate, powder.
Grade: Technical, pure.
Hazard: Flammable (pyrophoric) at room temperature in powder form; store under inert gas, petroleum, or other oxygen-free liquid. When heated to approximately 200C in hydrogen, barium reacts violently forming BaH_2. TLV: For all soluble barium compounds, 0.5 mg/m³ in air (as barium).
Use: Getter alloys in vacuum tubes, deoxidizer for copper, Frary's metal, lubricant for anode rotors in x-ray tubes, spark-plug alloys.

barium-137. Radioactive isotope of barium. See Cs-137.

barium acetate. CAS: 543-80-6. $Ba(C_2H_3O_2)_2 \cdot H_2O$.
Properties: White crystals, soluble in water, insoluble in alcohol, d 2.02, mp decomposes.
Derivation: Acetic acid is added to a solution of barium sulfide. The product is recovered by evaporation and subsequent crystallization.
Grade: Technical, CP. See barium.
Use: Chemical reagent, acetates, textile mordant, catalyst manufacturing, paint and varnish driers.

barium aluminate. $3BaO \cdot Al_2O_3$.
Properties: Gray pulverized mass, soluble in water, acids. See barium.

barium azide. CAS: 18810-58-7. $Ba(N_3)_2$.
Crystalline solid, d 2.936, loses nitrogen at 120C, soluble in water, slightly soluble in alcohol.
Hazard: Explodes when shocked or heated. See also barium.
Use: High explosives.

barium binoxide. See barium peroxide.

barium borotungstate. (barium borowolframate). $2BaO \cdot B_2O_3 \cdot 9WO_3 \cdot 18H_2O$.
Properties: Large, white crystals. Effloresces in air. Keep well stoppered! Soluble in water.
Hazard: A poison. TLV: See barium.
Use: Making borotungstates.

barium borowolframate. See barium borotungstate.

barium bromate. CAS: 13967-90-3. $Ba(BrO_3)_2 \cdot H_2O$.
Properties: White crystals or crystalline powder. Slightly soluble in water, insoluble in alcohol, d 3.820, decomposes at 260C.
Derivation: By passing bromine into a soluble of barium hydroxide, barium bromide and barium bromate being formed which are separated by crystallization.
Grade: Pure, reagent.
Hazard: A poison. Moderate fire risk in contact with organic materials. TLV: See barium.
Analytical reagent, oxidizing agent, corrosion inhibitor.

barium bromide. $BaBr_2 \cdot 2H_2O$.
Properties: Colorless crystals. Soluble in water and in alcohol, d 3.852, mp (anhydrous) 847C.
Derivation: Interaction of barium sulfide and hydrobromic acid with subsequent crystallization.
Grade: Technical, CP.

c' oride; insoluble in

r ..id nylon.

: c'uses tempo-
v ve of lysergic

C

C. Symbol for carbon.

^{14}C. (carbon-14). The naturally occurring radioactive isotope of carbon used in chemical dating, tracer studies, etc.

Ca. Symbol for calcium.

CA. Abbreviation for cellulose acetate and cortisone acetate, also for controlled atmosphere.

C_3A. Abbreviation for tricalcium aluminate as used in cement.
See cement, Portland.

CAB. Abbreviation for cellulose acetate butyrate.

"Cab-O-Sil."[275] TM for colloidal silica particles sintered together in chain-like formations. Surface area ranges from 50 to 400 m^2/g, depending on grade.
Grade: Standard M-5, L-5, SD-20.
Use: Thickening and emulsifying agent for oil/water systems, drilling muds, cattle-feed supplements, tile cleaners, disperson of oil slicks on sea water, plastics, solar-heated ceiling tiles.

"Cab-O-Sperse."[275] TM for aqueous dispersions of pyrogenic silica for use in the paper and textile industries.

cacao butter. (cocoa butter). See theobroma oil.

C acid. (2-naphthylamine-4,8-disulfonic acid). $C_{10}H_5(NH)_2(SO_3H)_2$.
Properties: White, crystalline solid; slightly soluble in water.
Derivation: Reduction of 2-nitronaphthalene-4,8-disulfonic acid. The sodium salt is recrystallized from water.
Use: Azo dye intermediate.

cacodylic acid. (dimethylarsinic acid). $(CH_3)_2AsOOH$.
Properties: Colorless, odorless, deliquescent crystals; mp 200C; soluble in water, alcohol, and acetic acid; insoluble in ether.
Derivation: By distilling a mixture of arsenic trioxide and potassium acetate, and oxidizing the resulting product with mercuric oxide.
Hazard: Toxic by ingestion.
Use: Herbicide especially for control of Johnson grass on cotton, soil sterilant, chemical warfare, timber thinning.

cactinomycin. USAN name for an antibiotic produced from *Streptomyces* which is 10% dactinomycin and 90% two kinds of actinomycin C.

"Cadalume" L.[238] TM for a bright cadmium electroplating process for a protective coating on iron and steel. Materials used are CdO, NaCN, and addition agents.

"Cadalyte."[28] TM for a series of compounds for cadmium electroplating.

cadaverine. (1,5-diaminopentane; pentamethylenediamine). $NH_2(CH_2)_5NH_2$. A ptomaine formed in the decay of animal proteins after death, also made synthetically.
Properties: Syrupy, colorless, fuming, odorous liquid; mp 9C; bp 178–179C; soluble in water and alcohol, slightly soluble in ether.
Hazard: Toxic by ingestion, absorbed by skin, a skin and eye irritant.
Use: Preparation of high polymers, intermediate, biological research.

"caddy."[48] TM for a liquid cadmium fungicide used on turf grass.
Hazard: See cadmium.

Cade oil. See juniper tar oil.

cadiene. See sesquiterpene.

"Cadmate."[69] TM for cadmium diethyldithiocarbamate.
Hazard: See cadmium.

"Cadminate."[329] TM for a turf fungicide containing 60% cadmium succinate and 40% inert matter.
Hazard: See cadmium.

cadmium. CAS: 7440-43-9. Cd.
Metallic element of atomic number 48, group IIB of the periodic table. Aw 112.40. Valence 2. There are eight stable isotopes.
Properties: Soft, blue-white, malleable metal or grayish-white powder. Tarnishes in moist air, corrosion resistance poor in industrial atmospheres, becomes brittle at 80C. Resistant to alkalies, high neutron absorber. D 8.642, mp

320.9C, bp 767C, refr index 1.13, Mohs hardness 2.0. Soluble in acids, especially nitric, and in ammonium nitrate solution. Lowers melting point of certain alloys when used in low percentages. Combustible.

Occurrence: A greenockite (cadmium sulfide) ore containing zinc sulfide also with lead and copper ores containing zinc. Canada, central and western US, Peru, Australia, Mexico, Zaire.

Derivations: (1) Dust or fume from roasting zinc ores is collected, mixed with coal or coke and sodium or zinc chloride, and sintered. The cadmium fume is collected in an electrostatic precipitator, leached, fractionally precipitated, and distilled. (2) By direct distillation from cadmium-bearing zinc (3) By recovery from electrolytic zinc process (approximately 40%).

Hazard: Flammable in powder form. Toxic by inhalation of dust or fume. A carcinogen. Cadmium plating of food and beverage containers has resulted in a number of outbreaks of gastroenteritis (food poisoning). Soluble compounds of cadmium are highly toxic; however, ingestion usually induces a strong emetic action which minimizes the risk of fatal poisoning. Use as fungicide may be restricted. TLV: (Dust and soluble compounds) 0.05 mg/m³ of air; (oxide fume as Cd) ceiling 0.05 mg/m³ of air.

Grade: Technical, powder, pure sticks, ingots, slabs, high-purity crystals (less than 10 ppm impurities).

Use: Electrodeposited and dipped coatings on metals, bearing and low-melting alloys, brazing alloys, fire protection systems, nickel-cadmium storage batteries, power transmission wire, TV phosphors, basis of pigments used in ceramic glazes, machinery enamels, baking enamels, Weston standard cell control of atomic fission in nuclear reactors, fungicide, photography and lithography, selenium rectifiers, electrodes for cadmium-vapor lamps and photoelectric cells.

cadmium acetate. (a) $Cd(OOCCH_3)_2 \cdot 3HOH$; (b) $Cd(OOCCH_3)_2$.

Properties: Colorless crystals, soluble in water and alcohols. (a) d 2.01, mp loses water at 130C; (b) d 2.341, mp 256C.

Derivation: Interaction of acetic acid and cadmium oxide.

Hazard: See cadmium.

Use: Ceramics (iridescent glazes), manufacture of acetates, assistant in dyeing and printing textiles, electroplating baths, laboratory reagent.

cadmium ammonium bromide. (ammonium-cadmium bromide). $CdBr_2 \cdot 4NH_4Br$.

Properties: Colorless crystals. Soluble in alcohol and water.

Hazard: See cadmium.

cadmium antimonide. A semiconductor used in thermoelectric devices.

Hazard: See cadmium and antimony.

cadmium-base Babbitt. See Babbitt metal.

cadmium borotungstate. $Cd_5(BW_{12}O_{40}) \cdot 18HOH$.

Properties: Yellow, heavy crystals; mp 75C; soluble in water. The solution is yellow to light brown.

Grade: Technical.

Hazard: See cadmium.

Use: Separating minerals.

cadmium bromate. $Cd(BrO_3)_2 \cdot HOH$.

Properties: White crystals or crystalline powder, d 3.758, mp decomposes. Soluble in water, insoluble in alcohol.

Derivation: By adding cadmium sulfate to a solution of barium bromate.

Hazard: Strong oxidizer, dangerous in contact with organics. Highly toxic, irritant, oxidizer.

Use: Analytical reagent.

cadmium bromide. CAS: 7789-42-6. $CdBr_2$ or $CdBr_2 \cdot 4HOH$.

Properties: White to yellowish efflorescent crystalline, d 5.192, mp (anhydrous) 568C, bp 863C, soluble in water, acetone, alcohol, and acids.

Derivation: By heating cadmium in bromine vapor.

Grade: Technical, reagent.

Hazard: See cadmium.

Use: Photography, process engraving, lithography.

cadmium carbonate. CAS: 513-78-0. $CdCO_3$.

Properties: White, amorphous powder; d 4.258; decomposes at less than 500C; soluble in dilute acids and in concentrated solution of ammonium salts; insoluble in water.

Hazard: See cadmium.

Grade: Reagent.

cadmium chlorate. $Cd(ClO_3)_2 \cdot 2HOH$.

Properties: Colorless, prismatic crystals. Hygroscopic, d 2.28 (18C), mp 80C, soluble in alcohol, water, and acetone.

Grade: Technical.

Hazard: Dangerous in contact with organic materials.

cadmium chloride. CAS: 10108-64-2. (a) $CdCl_2$; (b) $CdCl_2 \cdot 2.5HOH$.

Properties: Small, white, odorless crystals; d (a) 4.05, (b) 3.327; mp (a) 568C; bp (a) 960C; soluble in water and acetone.

Derivation
mium wit
Grade chr
Use: Prepara
chemistry
ing ingre
to tinning s
rors, manuf.

cadmium c
white preci
cyanide is a
a cadmiu
it is diss
agent, an
as an elect
mium.
Hazard: S
Use: Elect

cadmium d
Cd[SC(S
Properties
melting ran
carbon disu
and gaso
Hazard: S
Use: Acceler

cadmium f
Availabl
approxima
insoluble i
Hazard: S
Use:
temp
rial for cr

cadmium h
Cd(OH)
Properties:
loses HO
droxide
and alk
Derivation:
on a cad
Grade: T
Hazard:
Use: Cadm
battery ele

cadmium
Properties
poses; sligh
acid or
Grade: T
Hazard:
als.
Use: Oxidi

(a) 3.012; (b) 1.867; (c) 1.70. (a) Insoluble in water and acids; (b) soluble in water, insoluble in alcohol; (c) soluble in water and alcohol.
Derivation: Action of sulfuric acid on chromium hydroxide with subsequent crystallization.
Use: Chrome plating, chromium alloys, mordant, catalyst, green paints and varnishes, green ink, ceramics (glazes). The basic form (reduction of sodium dichromate) is used in tanning.

chromite. (chrome iron ore).
CAS: 1308-31-2. $FeCr_2O_4$. A natural oxide of ferrous iron and chromium, sometimes with magnesium and aluminum present. Usually occurs in magnesium and iron rich igneous rocks.
Properties: Color iron-black to brownish-black, streak dark brown, luster metallic to submetallic, d 3.6, Mohs hardness 5.5.
Grade: Metallurgical, refractory, chemical.
Occurrence: USSR, South Africa, Zimbabwe, Philippines, Cuba, Turkey.
Hazard: A carcinogen. TLV: 0.05 mg/m³ of air.
Use: Only commercial source of chromium and its compounds.

chromium. CAS: 7440-47-3. Cr. Metallic element of atomic number 24, group VIB of the Periodic Table, aw 51.996, valences=2,3,6; 4 stable isotopes. Name derived from Greek for color.
Properties: Hard, brittle, semi-gray metal; d 7.1; mp 1900C; bp 2200C. Compounds have strong and varied colors. Cr ion forms many coordination compounds. Exists in active and passive forms, the latter giving rise to its corrosion resistance due to a thin surface oxide layer that passivates the metal when treated with oxidizing agents. Active form reacts readily with dilute acids to form chromous salts. Soluble in acids (except nitric) and strong alkalies, insoluble in water.
Occurrence: USSR, South Africa, Turkey, Philippines, Zimbabwe, Cuba.
Derivation: From chromite by direct reduction (ferrochrome), by reducing the oxide with finely divided aluminum or carbon, and by electrolysis of chromium solutions.
Grade: (ore): Chromium ores are classified as (1) metallurgical, (2) refractory, and (3) chemical and their consumption in the US is in that order. (1) Must contain a minimum of 48% Cr_2O_3 and have Cr-Fe ratio of 3:1; (2) must be high in Cr_2O_3, and Al_2O_3 and low in iron; (3) must be low in SiO_2 and Al_2O_3 and high in Cr_2O_3.
Forms available: (1) Chromium metal as lumps, granules or powder; (2) high- or low-carbon ferrochromium; (3) single crystals, high-purity crystals, or powder run 99.97% pure.
Hazard: Hexavalent chromium compounds are carcinogenic (OSHA) and corrosive on tissue, resulting in ulcers and dermatitis on prolonged contact. TLV: For chromium dust and fume is 0.5 mg/m³ of air.
Use: Alloying and plating element on metal and plastic substrates for corrosion resistance, chromium-containing and stainless steels, protective coating for automotive and equipment accessories, nuclear and high-temperature research, constituent of inorganic pigments.

chromium-51. Radioactive Chromium of mass number 51.
Properties: Half-life 26.5D, radiation: gamma (0.32 MeV).
Grade: USP (as sodium chromate Cr-51 injection).
Hazard: Radioactive poison.
Use: Diagnosis of blood volume (as tracer).

chromium acetate. See chromic acetate.

chromium acetylacetonate.
$[CH_3COCHC(CH_3)O]_3Cr$.
Properties: Purple powder or red-violet crystals, mp 216C, bp 340C, insoluble in water, soluble in acetone and alcohol.
Derivation: Reaction of chromium chloride, acetylacetone and sodium carbonate.
Use: Reduction of detonation of nitromethane.

chromium ammonium sulfate. (ammonium chromium sulfate; chrome ammonium alum).
$CrNH_4(SO_4)_2 \cdot 12HOH$.
Properties: Green powder or deep violet crystals, d 1.72, mp 94C. Soluble in water, slightly soluble in alcohol. The aqueous solution is violet when cold, green when hot.
Grade: Technical.
Use: Mordant, tanning.

chromium boride. One of several compounds of chromium and boron, e.g., CrB, CrB_2, and Cr_3B_2. They have high melting points, are very hard and corrosion-resistant and may be suitable for use in jet and rocket engines.
Properties: CrB may be crystals, d 6.2, mp 1550C, Mohs hardness 8.5, resistivity 67 μ-ohm cm (20C). CrB_2: d 5.15, mp 1850C, hardness 2010 (Knoop), resists oxidation up to 1100C. Cr_3B_2: may be crystals, d 6.1, Mohs hardness 9+.
Use: Metallurgical additives, high-temperature electrical conductors, cermets, refractories, coatings resistant to attack by molten metals.

chromium bromide. See chromous bromide.

chromium carbide. Cr_3C_2.
Properties: Ortho-rhombic crystals, d 6.65, microhardness 2700 kg/sq mm (load 50 g), mp 1890C,

but improved models retain particles as small as 20 microns. Cyclones are also used in cleaning and firing pulverized coal.

cyclonite. (sym-trimethylene trinitramine; hexahydro-1,2,5-trintro-sym-triazine; trinitrotrimethylenetriamine; cyclotrimethylenetrinitramine; RDX). CAS: 121-82-4. $N(NO_2)CH_2N(NO_2)CH_2N(NO_2CH_2$.
Properties: White, crystalline solid; d 1.82; mp 203.5C:, soluble in acetone; insoluble in water, alcohol, carbon tetrachloride, and carbon disulfide; slightly soluble in methanol and ether.
Derivation: Reaction of hexamethylenetetramine with concentrated nitric acid.
Hazard: High explosive, easily initiated by mercury fulminate. Toxic by inhalation and skin contact. TLV: 1.5 mg/m³ of air.
Use: Explosive 1.5 times as powerful as TNT.

3-cyclooctadiene. CAS: 29965-97-7. C_8H_{12}. Intermediate for such compounds as suberic acid

1,5-cyclooctadiene.

$HC{:}CH(CH_2)_2CH{:}CHCH_2CH_2$. A butadiene dimer.
Properties: Liquid, fp −56.39C, distillation range 301–303F (technical), bp 149.34C (pure), d 0.88328 (20/4C), lb/gal 7.38, vap press 0.50 psia (37.7C), refr index 1.4933 (20C), flash p 100F (37.7C), combustible.
Derivation: Catalytic dimerization of butadiene.
Grade: Technical 95%, 99%, 99.8 mole %.
Hazard: Moderate fire risk.
Use: Resin intermediate, third monomer in EPT rubber.

cyclooctane. C_8H_{16}.
Properties: Colorless liquid, d 0.835, bp 148C, mp 14C, combustible.

1,3,5,7-cyclooctatetraene. CAS: 629-20-9. C_8H_8.
Properties: Colorless liquid, fp −7C, bp 140C, d 0.943 (0/4C), refr index 1.5394 (20C). It behaves like an aliphatic hydrocarbon, is relatively reactive, and resinifies on standing in air. Combustible.

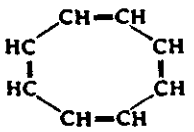

Derivation: Nickel-catalyzed polymerization of acetylene, a reaction discovered by Reppe in Germany about 1940. The mechanism has several possible pathways.
Use: Organic research
See also polyacetylene.

cycloolefin. An alicyclic hydrocarbon having two or more double bonds, e.g., the very reactive and widely used cyclopentadiene derived from coal tar as well as cyclohexadiene and cyclooctatetraene containing six and eight carbon atoms respectively. The latter has four double bonds and is a polymer of acetylene.

cycloparaffin. An alicyclic hydrocarbon in which three or more of the carbon atoms in each molecule are united in a ring structure and each of these ring carbon atoms is joined to two hydrogen atoms or alkyl groups. The simplest members are cyclopropane (C_3H_6), cyclobutane (C_4H_8), cyclopentane (C_5H_{10}), cyclohexane (C_6H_{12}), and derivatives of these such as methylcyclohexane ($C_6H_{11}CH_3$).
Hazard: All members of the cycloparaffin series are narcotic and may cause death through respiratory paralysis. For most of the members there appears to be a narrow range between the concentration causing deep narcosis and those causing death.

1,3-cyclopentadiene. CAS: 542-92-7. C_5H_6.

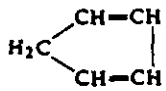

Properties: Colorless liquid with d 0.805 and bp 425C. Insoluble in water; soluble in alcohol, ether, and benzene.
Derivation: From coal tar and cracked petroleum oils.
Hazard: Decomposes violently at high temperature. Toxic. TLV: 75 ppm in air.
Use: Chemical intermediate, organic synthesis (Diels-Alder reaction), starting material for synthetic prostaglandin, chlorinated insecticides, and formation of sandwich compounds by chelation, e.g., cyclopentadienyl iron dicarbonyl dimer $[C_5H_5Fe(CO)_2]_2$.

cyclopentamine hydrochloride. (1-cyclopentyl-2-methyl-aminopropane hydrochloride). $C_5H_9CH_2(CH_3)NHCH_3{:}HCl$.
Properties: White, crystalline powder. Mild characteristic odor and bitter taste. Mp 113.0–116.0C. Freely soluble in water, alcohol, and chloroform; soluble in benzene; slightly soluble in ether; pH (1% solution) approximately 6.2.

Cyclonite (RDX)

Booster Sensitivity Test:
- Condition
- Tetryl, gm
- Wax, in. for 50% Detonation
- Wax, gm
- Density, gm/cc

Heat of:

Combustion, cal/gm	2285
Explosion, cal/gm	1280
Gas Volume, cc/gm	908
Formation, cal/gm	-96
Solution, cal/mol (28-55% HNO_3)	7.169*

*Assuming cyclonite unimolecular

Specific Heat: cal/gm/°C

°C		°C	
20	0.298	100	0.406
40	0.331	120	0.427
60	0.360	140	0.446
80	0.384		

Burning Rate:
cm/sec

Thermal Conductivity:

		(h)
cal/sec/cm/°C	1.263	6.91×10^{-4}
Density, gm/cc	1.533	6.98×10^{-4}

Coefficient of Expansion:
- Linear, %/°C
- Volume, %/°C

Hardness, Mohs' Scale: 2.5

Young's Modulus:
- E', dynes/cm²
- E, lb/inch²
- Density, gm/cc

Compressive Strength: lb/inch²

Vapor Pressure:
°C mm Mercury

Decomposition Equation:

Oxygen, atoms/sec (Z/sec)	(i) $10^{18.5}$
Heat, kilocalorie/mole (ΔH, kcal/mol)	47.5
Temperature Range, °C	213-299
Phase	Liquid

Armor Plate Impact Test:

60 mm Mortar Projectile:
- 50% Inert, Velocity, ft/sec
- Aluminum Fineness

500-lb General Purpose Bombs:

Plate Thickness, inches
- 1
- 1¼
- 1½
- 1¾

Bomb Drop Test:

T7, 2000-lb Semi-Armor-Piercing Bomb vs Concrete:

Max Safe Drop, ft

500-lb General Purpose Bomb vs Concrete:
- Height, ft
- Trials
- Unaffected
- Low Order
- High Order

1000-lb General Purpose Bomb vs Concrete:
- Height, ft
- Trials
- Unaffected
- Low Order
- High Order

Cyclonite* (RDX)

Composition:

%	
C	16.3
H	2.7
N	37.8
O	43.2

C/H Ratio 0.095

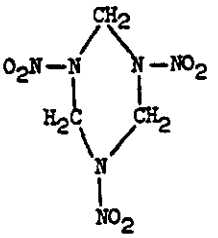

Molecular Weight: ($C_3H_6N_6O_6$) 222

Oxygen Balance:
- CO_2 % -22
- CO % 0.0

Density: gm/cc Crystal 1.82

Melting Point: °C 204

Freezing Point: °C

Boiling Point: °C

Refractive Index, n^D_{20}, n^D_{25}, n^D_{30}

Impact Sensitivity, 2 Kg Wt:
- Bureau of Mines Apparatus, cm 32
  - Sample Wt 20 mg
- Picatinny Arsenal Apparatus, in. 8
  - Sample Wt, mg 18

Friction Pendulum Test:
- Steel Shoe: Explodes
- Fiber Shoe: Unaffected

Rifle Bullet Impact Test:

Trials	%
Explosions	100
Partials	0
Burned	0
Unaffected	0

Explosion Temperature:

Seconds, 0.1 (no cap used)	°C 405
1	316
5 Decomposes	260
10	240
15	235
20	-

75°C International Heat Test:
- % Loss in 48 Hrs 0.03

100 C Heat Test:
- % Loss, 1st 48 Hrs 0.04
- % Loss, 2nd 48 Hrs 0.00
- Explosion in 100 Hrs None

Flammability Index: (d) 278

Hygroscopicity: % 25°C, 100% RH 0.02

Volatility: Nil

Vacuum Stability Test:

cc/40 Hrs, at	
90°C	
100°C	0.7
120°C	0.9
135°C	-
150°C	2.5

200 Gram Bomb Sand Test:
- Sand, gm 60.2

Sensitivity to Initiation:
- Minimum Detonating Charge, gm
  - Mercury Fulminate 0.19*
  - Lead Azide 0.05*
  - Tetryl -

* Alternative initiating charges.

Ballistic Mortar, % TNT: (a) 150

Trauzl Test, % TNT: (b) 157

Plate Dent Test: (c)
- Method A
- Condition Pressed
- Confined Yes
- Density, gm/cc 1.50
- Brisance, % TNT 135

Detonation Rate:
- Confinement None
- Condition Pressed
- Charge Diameter, in. 1.0
- Density, gm/cc 1.65
- Rate, meters/second 8180

*Name given by Clarence J. Bain of Picatinny Arsenal. Germans call it Hexogen; Italians call it T4; British, RDX.

beta-HMX

Booster Sensitivity Test:
Condition
Tetryl, gm
Wax, in. for 50% Detonation
Wax, gm
Density, gm/cc

Heat of:
Combustion, cal/gm 2362
Explosion, cal/gm (e) 1356
Gas Volume, cc/gm
Formation, cal/gm (e) -60.5
Fusion, cal/gm

Specific Heat: cal/gm/°C

°C		Recrystallized (g) °C	
-75	0.153	85	0.288
0	0.228	90	0.290
25	0.248	100	0.295
50	0.266	125	0.307
75	0.282	150	0.315

Burning Rate:
cm/sec

Thermal Conductivity:
cal/sec/cm/°C

Coefficient of Expansion:
Linear, %/°C
Volume, %/°C

Hardness, Mohs' Scale: (e) 2.3

Young's Modulus:
E', dynes/cm²
E, lb/inch²
Density, gm/cc

Compressive Strength: lb/inch²

Vapor Pressure:
°C mm Mercury

Decomposition Equation:
Oxygen, atoms/sec (e)
(Z/sec) $10^{-9.7}$
Heat, kilocalorie/mole
(ΔH, kcal/mol) 52.7
Temperature Range, °C 271-314
Phase Liquid

Armor Plate Impact Test:

60 mm Mortar Projectile:
50% Inert, Velocity, ft/sec
Aluminum Fineness

500-lb General Purpose Bombs:

Plate Thickness, inches
1
1¼
1½
1¾

Bomb Drop Test:

T7, 2000-lb Semi-Armor-Piercing Bomb vs Concrete

Max Safe Drop, ft

500-lb General Purpose Bomb vs Concrete:

Height, ft
Trials
Unaffected
Low Order
High Order

1000-lb General Purpose Bomb vs Concrete:

Height, ft
Trials
Unaffected
Low Order
High Order

beta-HMX (a)

Composition:

%	
C	16.2
H	2.7
N	37.9
O	43.2

C/H Ratio 0.095

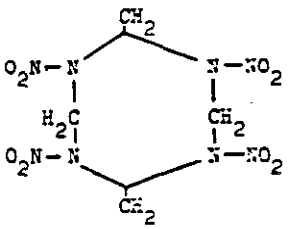

Molecular Weight: ($C_4H_8N_8O_8$) 296

Oxygen Balance:

CO_2 %	-21.6
CO %	0.0

Density: gm/cc Crystal 1.90

Melting Point: °C Capillary method 273
Koffer Micro Hot Stage 280

Freezing Point: °C

Boiling Point: °C

Refractive Index, n_{20}^{D}
n_{25}^{D}
n_{30}^{D}

Impact Sensitivity, 2 Kg Wt:

Bureau of Mines Apparatus, cm	32
Sample Wt 20 mg	
Picatinny Arsenal Apparatus, in.	9
Sample Wt, mg	23

Fallhammer Pendulum Test:

Steel Shoe	Explodes
Fiber Shoe	Unaffected

Rifle Bullet Impact Test:

	Trials %
Explosions	
Partials	
Burned	
Unaffected	

Vacuum Stability Test:
cc/40 Hrs, at

90°C	
100°C	0.37
120°C	0.45
135°C	--
150°C	0.62

200 Gram Bomb Sand Test:
Sand, gm 60.4

Explosion Temperature:

Seconds	°C
1 (no cap used)	350
5	--
10	327
15	306
20	--

Sensitivity to Initiation:
Minimum Detonating Charge, gm

Mercury Fulminate	
Lead Azide	0.30
Tetryl	

Ballistic Mortar, % TNT: 150

Trauzl Test, % TNT: 145

75°C International Heat Test:
% Loss in 48 Hrs

100°C Heat Test:

% Loss, 1st 48 Hrs	0.05
% Loss, 2nd 48 Hrs	0.03
Explosion in 100 Hrs	None

Flammability Index:

Hygroscopicity: %
[illegible] (c) 0.00

Plate Dent Test:

Method	
Condition	
Confined	
Density, gm/cc	
Brisance, % TNT	

Detonation Rate:

Confinement	
Condition	
Charge Diameter, in.	
Density, gm/cc	1.84
Rate, meters/second	9124

lava. Molten rock (magma) that has reached the surface of the earth.

lavandin oil. See lavender oil.

lavender oil. CAS: 8000-28-0. An essential oil used in perfumery, 35% ester content as linalyl acetate required. Terpeneless grade has about twice the concentration of the natural oil.

"Lavenol."[188] TM for a series of synthetic lavender oil substitute of various types.

Lavoisier, Antoine Laurent. (1743–1794) A French chemist generally regarded as the "father" of chemistry. His "Traite Elementaire de Chimie" (1789) listed 30 elements, clarified the nomenclature of acids, bases and salts, and described the composition of numerous organic substances. He erroneously believed that oxygen is the characteristic element of acids. However, his fundamental work on combustion, as a result of which he identified and named nitrogen (azote), and on the separation of hydrogen from water by a unique reduction experiment carried out in a heated gun barrel, earned him a leading position among early chemists.
See also Mendeleef.

Lawrence, Ernest O. (1901–1958) An American physicist who invented the cyclotron in 1929. Both the element lawrencium and the Lawrence Livermore Research Laboratory at the University of California were named after him.
See also cyclotron, bombardment.

lawrencium. CAS: 22537-19-5. Lr. A synthetic radioactive element with atomic number 103, discovered in 1961, aw 257, only one other isotope is known (256); the 257 isotope has a half-life of 8 seconds. It has been made by bombarding californium with boron ions. It exhibits alpha radiation.
See actinide series.

lay-up. In the reinforced plastics industry, a term used to refer to placement of the reinforcing material in the mold.

LC_{50}. (lethal concentration 50%). That quantity of a substance administered by inhalation that is necessary to kill 50% of test animals exposed to it within a specified time. The test applies not only to gases and vapors but to fumes, dusts, and other particulates, suspended in air.

LCL. Abbreviation for "less than carload lot," used by shippers, traffic managers, railroads, etc.

LD_{50}. (lethal dose 50%). That quantity of a substance necessary to kill 50% of exposed animals in laboratory tests within a specified time. A substance having an oral LD_{50} of less than 400 mg/kg of body weight is considered to be highly toxic.

LDPE. Abbreviation for low-density polyethylene.

leaching. See solvent extraction.

lead. CAS: 7439-92-1. Pb. (from Latin plumbum). Metallic element of atomic number 82, Group IVA of the periodic table, aw 207.2, valences = 2,4, four stable isotopes. The isotopes are the end products of the disintegration of three series of natural radioactive elements uranium (206), thorium (208), and actinium (207).
Properties: Heavy, ductile, soft, gray solid, d 11.35, mp 327.4C, bp 1755C, soluble in dilute nitric acid, insoluble in water but dissolves slowly in water containing a weak acid, resists corrosion, relatively impenetrable to radiation. Poor electrical conductor, good sound and vibration absorber. Noncombustible.
Occurrence: US, Mexico, Canada, South America, Australia, Africa, Europe.
Derivation: Roasting and reduction of galena (lead sulfide), anglesite (lead sulfate), and cerussite (lead carbonate). Also from scrap.
Purification method: Desilvering (Parkes process), electrolytic refining (Betts process), pyrometallurgical refining (Harris process). Bismuth is removed by Betterton-Kroll process.
Grade: High purity (less than 10 ppm impurity), pure (99.9+%), powdered (99% pure), pig lead, paste.
Forms available: Ingots, sheet, pipe, shot, buckles or straps, grids, rod, wire, etc.; paste; powder; single crystals.
Hazard: Toxic by ingestion and inhalation of dust or fume. TLV (as Pb): (fumes and dusts and inorganic compounds) 0.15 mg/m³ of air. For ambient air the EPA standard is 1.5 micrograms/m³. A cumulative poison. FDA regulations require zero lead content in foods and less than 0.05% in house paints.
Use: Storage batteries, tetraethyllead (gasoline additive), radiation shielding, cable covering, ammunition, chemical reaction equipment (piping, tank linings, etc.), solder and fusible alloys, type metal, vibration damping in heavy construction, foil, babbit and other bearing alloys. For further information, refer to Lead Industries Association, 292 Madison Ave., New York.

lead acetate. (sugar of lead). CAS: 301-04-2. $Pb(C_2H_3O_2)_2 \cdot 3H_2O$.
Properties: White crystals or flakes (commercial grades are frequently brown or gray lumps),

mercury sulfuret).
gS.
scarlet powder. Insoluble
l 8.06–8.12, mp sublimes

mercury and sulfur with
sublimation. A precipi-
English vermilion.
ingestion, inhalation, and
as mercury): 0.05 mg/m³

mercuric sulfocyanate;
mercury sulfocyanate;
CAS: 592-85-8.

r, slightly soluble in alco-
mp decomposes.
tion of mercuric nitrate
anate and subsequent so-
of hot water and crystal-

ng inhalation, and
y): 0.05 mg/m³

chnics.

M for merbromin.

cury proto-acetate; mer-
o31-60-7.

es or plates, decomposed
light into mercury and
tly soluble in water, in-
ether, soluble in dilute

odium acetate with mer-
acidified with nitric acid.

ngestion, inhalation, and
as mercury): 0.05 mg/m³

erial).

$_2C_2$.
r, a salt of acetylene.
acetylene with aqueous
alts.
a risk when shocked or

rcury bromide).
Hlr or Hg_2Br_2.
r or colorless crystals,
m ow on heating,
d arkens on expo-
turning nitric acid (pro-

longed heating), hot concentrated sulfuric acid, hot ammonium carbonate or ammonium succinate solutions; sparingly soluble in water; insoluble in alcohol and ether; d 7.307; sublimes at 340–350C; mp 405C.
Derivation: (a) Action of potassium bromide on solution of mercurous nitrate in dilute nitric acid. (b) Sublimation from mixture of mercury and mercuric bromide.
Hazard: Highly toxic by ingestion, inhalation, and skin absorption. TLV (as mercury): 0.05 mg/m³ of air.

mercurous chlorate. (mercury chlorate).
CAS: 10294-44-7. $Hg_2(ClO_3)_2$.
Properties: White crystals, d 6.409, mp 250C (decomposes), soluble in alcohol, water, and acetic acid.
Hazard: Explodes in contact with organic or combustible materials, keep away from light. Highly toxic.

mercurous chloride. (mercury monochloride; mercury protochloride; mercury chloride, mild; calomel). CAS: 10112-91-1. Hg_2Cl_2.
Properties: White, rhombic crystals or crystalline powder; odorless; stable in air but darkens on exposure to light; insoluble in water, ether, alcohol, and cold dilute acids; d 6.993; mp 302C; bp 384C; decomposed by alkalies.
Derivation: By heating mercuric chloride and mercury with subsequent sublimation.
Grade: Technical, CP, NF.
Hazard: Toxic dose is uncertain.
Use: Fungicide, electrodes, pharmaceuticals, pyrotechnics, ceramic painting, maggot control in agriculture.

mercurous chromate. (mercury chromate).
Hg_2CrO_4.
Properties: Brick-red powder, variable composition, decomposes on heating, soluble in nitric acid (concentrated), insoluble in alcohol and water.
Hazard: Moderate fire hazard in contact with organic materials. Highly toxic. TLV (as mercury): 0.05 mg/m³ of air.
Use: Ceramics (coloring green).

mercurous iodide. (mercury protoiodide).
CAS: 15385-57-6. HgI or Hg_2I_2.
Properties: Bright yellow powder, becoming greenish on exposure to light due to decomposition into metallic mercury and mercuric iodide. Becomes dark yellow, orange, and orange-red on heating. Undergoes same color change in opposite order on cooling. Odorless and tasteless; soluble in castor oil, liquid ammonia, aqua ammonia; insoluble in water, alcohol, and ether; d 7.6445–7.75; sublimes at 140C; mp 290C (with partial decomposition).
Derivation: (a) Action of potassium iodide on a mercurous salt. (b) Boiling a solution of mercurous nitrate containing nitric acid with excess of iodine.
Grade: Technical.
Hazard: Toxic by ingestion, inhalation, and skin absorption. TLV (as mercury): 0.05 mg/m³ of air.
Use: Medicine (topical antibacterial).

mercurous nitrate, hydrated. CAS: 10415-75-5. $HgNO_3 \cdot 2HOH$.
Properties: Short prismatic crystals, effloresces and becomes anhydrous in dry air, sensitive to light, soluble in small quantities of warm water (hydrolyzes in larger quantities)and water acidified with nitric acid, d 4.785 (3.9C), mp 70C (decomposes).
Derivation: Action of cold dilute nitric acid upon an excess of mercury and warming slightly.
Hazard: May be explosive if shocked or heated. Highly toxic. TLV (as mercury): 0.05 mg/m³ of air.
Use: Analytical agent.

mercurous oxide. CAS: 15829-53-5. Hg_2O.
Properties: Black powder, d 9.8, decomposes at 100C, soluble in acids, insoluble in water.
Derivation: Action of sodium hydroxide on mercurous nitrate.
Hazard: Highly toxic. TLV (as mercury): 0.05 mg/m³ of air.

mercurous sulfate. CAS: 7783-36-0. Hg_2SO_4.
Properties: White to yellow, crystalline powder; soluble in hot sulfuric acid, dilute nitric acid; slightly soluble in water, d 7.56, decomposes on heating.
Derivation: (a) Dissolving mercury in sulfuric acid and heating gently. (b) Adding sulfuric acid to mercurous nitrate solution.
Hazard: Highly toxic. TLV (as mercury): 0.05 mg/m³ of air.
Use: Chemical (admixed with sulfuric acid as a catalyst, in oxidation of naphthalene to phthalic acid), batteries (Clark cell, Weston cell).

mercury. (quicksilver; hydrargyrum).
CAS: 7439-97-6. Hg. Metallic element of atomic number 80, group IIB of the Periodic Table, aw 200.59, valences = 1,2; 4 stable isotopes and 12 artificially radioactive isotopes.
Properties: Silvery, extremely heavy liquid, sometimes found native; insoluble in hydrochloric acid; soluble in sulfuric acid upon boiling; readily soluble in nitric acid; insoluble in water, alcohol, and ether; soluble in lipids;, extremely high sur-

face tension (480 dynes/cm) giving it unique rheological behavior; high electric conductivity; d 13.59; fp −38.85C; bp 356.6. Noncombustible.
Chief ore: Cinnabar.
Occurrence: Spain, Yugoslavia, Mexico, Canada, Algeria.
Derivation: By heating cinnabar in air or with lime and condensing the vapor.
Method of purification: Distillation; an important proportion of used mercury is recovered by redistillation.
Grade: Technical, virgin, redistilled, ACS.
Hazard: (1) Mercury, metallic: Highly toxic by skin absorption and inhalation of fume or vapor, absorbed by respiratory and intestinal tract. FDA permits zero addition to the 20 micrograms of mercury contained in average daily diet. TLV (as mercury): 0.05 mg/m³ of air. (2) All inorganic compounds of mercury are highly toxic by ingestion, inhalation, and skin absorption. TLV: 0.05 mg/m³ of air. (3) Most organic compounds of mercury are highly toxic; inorganic mercury can be converted to methylmercury by bacteria in water. TLV (as mercury): (alkyl compounds) 0.01 mg/m³ of air; all others 0.05 mg. *Note*: Spillage may be a toxic hazard due to droplet proliferation. Clean-up requires special care.
Use: Amalgams, catalyst, electrical apparatus, cathodes for production of chlorine and caustic soda, instruments (thermometers, barometers, etc.), mercury vapor lamps, extractive metallurgy, mirror coating, arc lamps, boilers, coolant and neutron absorber in nuclear power plants.

mercury, ammoniated. (mercuric chloride, ammoniated; ammonobasic mercuric chloride; ammoniated mercury chloride, white precipitate; white precipitate, fusible; aminomercuric chloride; mercury cosmetic). $HgNH_2Cl$.
Properties: White, pulverulent lumps or powder; earthy, metallic taste. Odorless, stable in air, darkens on exposure to light, soluble in ammonium carbonate and sodium thiosulfate solutions and in warm acids, insoluble in water and alcohol.
Derivation: By precipitating mercuric chloride with ammonium hydroxide in excess.
Grade: USP, technical.
Hazard: Highly toxic. TLV (as mercury): 0.05 mg/m³ of air.
Use: Medicine (local anti-infective), pharmaceuticals.

mercury bichloride. Legal label name for mercuric chloride.

mercury cell. An electrolytic cell for the production of caustic soda and chlorine from sodium chloride brine. Continuously fed brine is decomposed in one compartment between graphite anodes where chlorine is liberated and a mercury cathode where a sodium amalgam is formed. The amalgam flows continuously or intermittently to a second compartment where it is decomposed with water, forming a caustic solution. The decomposition is usually performed electrolytically by making the amalgam anodic with respect to an iron or graphite cathode. Pure water is supplied to the decomposition compartment at such a rate as to maintain a constant concentration of caustic in the product. With respect to the diaphragm cell, the mercury cathode cell has generally a more concentrated solution (50–70%), it has the disadvantages of higher operating voltage and lower efficiency (52–55%) and a high capital investment in mercury. Examples of mercury-cathode cells are Castner cell and DeNora cell.

mercury compounds. See corresponding mercurous or mercuric compound, e.g., mercury chlorate, see mercurous chlorate; mercury oxide, see mercuric oxide.

mercury dichromate. (mercuric dichromate; mercury bichromate). $HgCr_2O_7$.
Properties: Heavy, red, crystalline powder; soluble in acids; insoluble in water.
Hazard: Highly toxic. TLV (as mercury): 0.05 mg/m³ of air.

mercury fulminate. (mercuric cyanate). $Hg(CNO)_2$.
Properties: Gray, crystalline powder. Soluble in alcohol, ammonium hydroxide, and hot water; slightly soluble in cold water; d 4.42; mp explodes.
Derivation: By treating mercury with strong nitric acid and alcohol.
Grade: Technical.
Hazard: Explodes readily when dry, keep moist till use, an initiating explosive. Highly toxic. TLV (as mercury): 0.05 mg/m³ of air.
Use: Manufacture of caps and detonators for producing explosions of military, industrial, and sporting purposes.

mercury selenide. HgSe. Sublimes in a vacuum, d 8.266, insoluble in water.
Hazard: Highly toxic. TLV (as mercury): 0.05 mg/m³ of air.
Use: Semiconductor in solar cells, thin-film transistors, infrared detectors, ultrasonic amplifiers.

mercury telluride. HgTe.
Grade: 99.99%.
Use: Semiconductor in solar cells, thin-film transistors, infrared detectors, ultrasonic amplifiers.

Derivation: Ethylating p-nitrophenol with ethyl sulfate or chloride in presence of sodium hydroxide followed by reduction with iron filings and hydrochloric acid.
Hazard: Toxic by ingestion, inhalation, and skin absorption.
Use: Dyestuffs intermediate, pharmaceuticals, lab reagent.

phenetole. (phenyl ethyl ether).
CAS: 103-73-1. $C_6H_5OC_2H_5$.

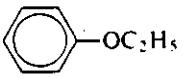

Properties: Colorless, oily liquid. Bp 172C, fp −30C, d 0.967 (20/4C), insoluble in water, soluble in alcohol and ether. Combustible.

phenetsal. See p-acetylaminophenyl salicylate.

"Phenex."[94] TM for α-ethyl-β-propylacrylaniline.
Use: Accelerator for natural and synthetic rubber and latexes.

phenic acid See phenol.

phenindione. (2-phenyl-1,3-indanedione).
CAS: 83-12-5. $C_{15}H_{10}O_2$.
Properties: Pale yellow crystals; practically odorless; insoluble in water; soluble in methanol, alcohol, ether, acetone, benzene; solutions in alkalies are red; in concentrated sulfuric acid blue.
Use: Medicine (blood anticoagulant).

pheniramine maleate. (prophenpyridamine maleate; 1-phenyl-1-(2-pyridyl)-3-di-methylaminopropane maleate). CAS: 132-20-7.
$C_{16}H_{20}N_2 \cdot C_4H_4O_4$.
Properties: White, crystalline powder with faint amine-like odor; mp 104–108C. Very soluble in alcohol and water, slightly soluble in benzene and ether, 1% solution has pH between 4.5 and 5.5.
Grade: NF.
Use: Medicine (antihistamine).

"Phenmad."[329] TM for a 10% phenylmercuric acetate aqueous solution.
Use: Turf fungicide.
Hazard: Highly toxic.

phenobarbital. (phenylbarbital; phenylethylmalonylurea; 5-ethyl-5-phenylbarbituric acid).
CAS: 50-06-6. $C_{12}H_{12}N_2O_3$.
Properties: White, shining, crystalline powder; odorless; stable; mp 174–178C; soluble in alcohol, ether, chloroform, alkali hydroxides, alkali carbonate solutions; sparingly soluble in water.
Derivation: Condensation of phenylethylmalonic acid derivatives and urea.
Grade: USP.
Hazard: May have damaging side effects. See barbituate.
Use: Medicine (sedative), laboratory reagent. Also available as the sodium salt which has good water-solubility.

phenocoll hydrochloride. (aminoacetophenetidide hydrochloride; glycocoll-p-phenetidine hydrochloride).
$C_2H_5OC_6H_4NHCOCH_2NH_2 \cdot HCl$.
Properties: Fine, white, crystalline powder; soluble in water and warm alcohol; slightly soluble in chloroform, ether, and benzene; mp 95C.
Derivation: By the action of aminoacetic acid upon phenetidine and acidifying.
Use: Medicine (analgesic).

phenol. (1) A class of aromatic organic compounds in which one or more hydroxy groups are attached directly to the benzene ring. Examples are phenol itself (benzophenol), the cresols, xylenols, resorcinol, naphthols. Though technically alcohols, their properties are quite different.
(2) phenol. (carbolic acid; phenylic acid; benzophenol; hydroxybenzene). CAS: 108-95-2.
C_6H_5OH.

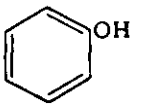

34th highest-volume chemical produced in US (1985).
Properties: White, crystalline mass which turns pink or red if not perfectly pure or if under influence of light; absorbs water from the air and liquefies; distinctive odor; sharp burning taste. When in very weak solution it has a sweetish taste. D 1.07, mp 42.5–43C, bp 182C, flash p (CC) 172.4F (78C). Soluble in alcohol, water, ether, chloroform, glycerol, carbon disulfide, petrolatum, fixed or volatile oils, and alkalies. Autoign temperature 1319F (715C). Combustible.
Derivation: Most of the phenol in the US is made by the oxidation of cumene, yielding acetone as a byproduct. The first step in the reaction yields cumene hydroperoxide, which decomposes with dilute sulfuric acid to the primary products, plus acetophenone and phenyl dimethyl carbinol. Several other benzene-based processes have been used in the past; derivation from benzoic acid is also possible.
Method of purification: Rectification.
Grade: Fused, crystals, or liquid, all as technical (82%, 90%, 95[illegible] sols), CP, an[illegible] USP
Hazard: Tox[illegible] in absorption; stron[illegible] in air.
Use: Phenolic re[illegible] nylon-6 (caprolacta[illegible] for refining lubricat[illegible] acid, phenolphth[illegible] phenetidine, pic[illegible] maceuticals, laborat[illegible] tors, slimicide, bioc[illegible]
Note: High-boilin[illegible] ing predominant [illegible] Their boiling point[illegible] they set to a glass a[illegible]
Use: In phenolic [illegible] itors, as solvents [illegible]

phenolate process. A[illegible] gen sulfide from [illegible] late, which react[illegible] give sodium hydr[illegible] be reversed by steam[illegible] dium phenolate.

phenol coefficient. [illegible] ness of a disinfectant [illegible] of comparison, the p[illegible] obtained by divid[illegible] test disinfectant b[illegible] that sterilizes a giver[illegible] standard conditions[illegible]
See also disinfectan[illegible]

phenoldisulfonic [illegible]
$C_6H_6O_7S_2$.
Properties: Deliquer[illegible] poses above 100C[illegible]
Use: Manufacture o[illegible]

phenol-formaldehyde [illegible] thermosetting pol[illegible] phenol with aque[illegible] 50–100C, with basic Baekeland in 1907 an[illegible] in 1911. Polymeri[illegible] type, proceeding t[illegible] acid catalyst "novola[illegible] which are thermoplas[illegible]
Properties: Gray to [illegible] when cured, resist[illegible] heat up to 200C, dimen[illegible] trical resistance, non[illegible] noise-absorbent, de[illegible] fair resistance to al[illegible] colored.
Use: Molded and cast a[illegible] ion exchange, lamin[illegible]

(82%, 90%, 95%, other components mostly cresols), CP, and USP.
Hazard: Toxic by ingestion, inhalation, and skin absorption; strong irritant to tissue. TLV: 5 ppm in air.
Use: Phenolic resins, epoxy resins (bisphenol-A) nylon-6 (caprolactam), 2,4-D, selective solvent for refining lubricating oils, adipic acid, salicylic acid, phenolphthalein, pentachlorophenol, acetophenetidine, picric acid, germicidal paints, pharmaceuticals, laboratory reagent, dyes and indicators, slimicide, biocide, general disinfectant.
Note: High-boiling phenols are mixtures containing predominantly m-substituted alkyl phenols. Their boiling points range from 238 to 288C, they set to a glass at −30C.
Use: In phenolic resins, as fuel-oil sludge inhibitors, as solvents and as rubber chemicals.

phenolate process. A process for removing hydrogen sulfide from gas by the use of sodium phenolate, which reacts with the hydrogen sulfide to give sodium hydrosulfide and phenol. This can be reversed by steam heat to regenerate the sodium phenolate.

phenol coefficient. In determining the effectiveness of a disinfectant using phenol as a standard of comparison, the phenol coefficient is a value obtained by dividing the highest dilution of the test disinfectant by the highest dilution of phenol that sterilizes a given culture of bacteria under standard conditions of time and temperature. See also disinfectant.

phenoldisulfonic acid. CAS: 96-77-5.
$C_6H_6O_7S_2$.
Properties: Deliquescent crystals, mp 90C, decomposes above 100C, soluble in water and alcohol.
Use: Manufacture of dye intermediates.

phenol-formaldehyde resin. The first synthetic thermosetting polymer, the reaction product of phenol with aqueous 37–50% formaldehyde at 50–100C, with basic catalyst, discovered by Baekeland in 1907 and trademarked "Bakelite" in 1911. Polymerization is of the condensation type, proceeding through three stages. With an acid catalyst "novolak" resins are produced, which are thermoplastic.
Properties: Gray to black, hard, infusible solid when cured, resistant to moisture, solvents, and heat up to 200C, dimensionally stable, good electrical resistance, noncombustible, sound- and noise-absorbent, decomposed by oxidizing acids, fair resistance to alkalies. Cannot be successfully colored.
Use: Molded and cast articles, bonding powders, ion exchange, laminating and impregnating, plywood and glass-fiber composites, ablative coatings for aerospace use, binder for oil-well sands, paint and baked enamel coatings, thermal and acoustic insulation, brake linings, clutch facings, shell molds, chemical equipment, machine and instrument housings, chemical-resistant mortars, machine parts, electrical devices.
See also A-, B-, and C-stage resin; novolak, Baekeland, phenolic resin.

phenol-furfural resin. A phenolic resin that has a somewhat sharper transition than phenol-formaldehyde from the soft, thermoplastic stage to the cured, infusible state and can be fabricated by injection molding since it has little tendency to harden before curing conditions are reached.

phenolic resin. Any of several types of synthetic thermosetting resin obtained by the condensation of phenol or substituted phenols with aldehydes such as formaldehyde, acetaldehyde, and furfural. Phenol-formaldehyde resins are typical and constitute the chief class of phenolics.

phenolphthalein. (3,3-bis(p-hydroxyphenyl)-phthalide). CAS: 77-09-8.
$(C_6H_4OH)_2C_2O_2C_6H_4$ (an approximation).
Properties: Pale yellow powder; forms an almost colorless solution in neutral or acid solution, pink to deep red in presence of alkali, but colorless in the presence of large amounts of alkali; soluble in alcohol, ether, and alkalies; insoluble in water; d 1.2765; mp 261C.
Derivation: Interaction of phenol and phthalic anhydride in sulfuric acid.
Grade: Technical, pure reagent, NF.
Use: Acid-base indicator, laboratory reagent, medicine (laxative).

phenol red. See phenolsulfonephthalein.

phenolsulfonephthalein. (phenol red).
CAS: 143-74-8. $(C_6H_4OH)_2COSO_2C_6H_4$ (an approximation).
Properties: Bright to dark red, crystalline powder; stable in air; slightly soluble in water, alcohol, and acetone; almost insoluble in chloroform and ether; soluble in alkali hydroxides and carbonates.
Derivation: Reaction of phenol with o-sulfobenzoic acid anhydride. Differs from phenolphthalein in containing an SO_2 group in place of a CO group.
Grade: Technical, reagent, USP. The USP spelling is phenolsulfonphthalein.
Use: Acid-base indicator, diagnostic reagent in medicine, laboratory reagent.

selenium. CAS: 7782-49-2. Se. A nonmetallic element, atomic number 34, Group VIA of the Periodic Table, aw 78.96, valences = 2, 4, 6. These are 6 stable isotopes.
Properties: Amorphous, red powder becoming black on standing and crystalline on heating; vitreous and colloidal forms may be prepared. Crystalline form has d 4.5, mp 217C, bp 685C; amorphous form softens at 40C and melts at 217C. Crystalline selenium is a p-type semiconductor; electrically it acts as a rectifier and has marked photoconductive and photovoltaic action (converts radiant to electrical energy); the electrical conductivity increases with increasing light irradiation. Soluble in concentrated nitric acid and (in liquid form) in common alkalies; forms binary alloys with silver, copper, zinc, lead, etc.; a necessary nutritional factor for animals.
Occurrence: Canada, Japan, Yugoslavia, Mexico; also in certain soils.
Grade: Commercial (powder or lumps), high-purity up to 99.999%.
Use: Electronics, xerographic plates, TV cameras, photocells, magnetic computer cores, solar batteries (rectifiers, relays); ceramics (colorant for glass), steel and copper (degasifier and machinability improver), rubber accelerator, catalyst, trace element in animal feeds. For further information consult Selenium Tellurium Development Association, 11 Broadway, NY, NY.

selenium diethyldithiocarbamate. CAS: 5456-28-0. $Se[SC(S)N(C_2H_5)_2]_4$.
Properties: Orange-yellow powder, d 1.32 (20/20C), melting range 63–71C, characteristic odor, soluble in carbon disulfide, benzene, chloroform, insoluble in water.
Hazard: Toxic by inhalation, ingestion, and skin absorption. TLV (as Se): 0.2 mg/m³ of air.
Use: Vulcanization agent without added sulfur or as a primary or secondary accelerator with sulfur.

selenium dimethyldithiocarbamate. See "Methyl Selenac."

selenium dioxide. (selenous acid anhydride). CAS: 7446-08-4. SeO_2.
Properties: White or yellowish-white to slightly reddish, lustrous, crystalline powder or needles. D 3.954 (15/15C), mp 340–350C (sublimes), soluble in alcohol, water.
Hazard: Toxic by inhalation, ingestion, and skin absorption. TLV (as Se): 0.2 mg/m³ of air.
Use: Analysis (testing for alkaloids), oxidizing agent, antioxidant in lubricating oils, catalyst.

selenium sulfide. (selenium disulfide). CAS: 7488-56-4. SeS_2.
Properties: Bright orange powder, mp less than 100C, practically insoluble in water and organic solvents.
Grade: USP.
Hazard: Toxic by ingestion, strong irritant to eyes and skin, an animal carcinogen. TLV: (as Se): 0.2 mg/m³ of air.
Use: Medicine (treatment of seborrhea, medicated shampoos).

selenium tetrafluoride. CAS: 10026-03-6. SeF_4.
Properties: Colorless, fuming liquid; fp −10C; bp 105C; d 2.75; reacts strongly with phosphorus and with water (hydrolysis). Soluble in alcohol, sulfuric acid, ether, and carbon tetrachloride.
Derivation: Reaction of selenium chloride and silver fluoride.
Hazard: Irritant.
Use: Fluorinating agent.

selenous acid. (selenious acid). H_2SeO_3.
Properties: Transparent, colorless, deliquescent crystals. Soluble in water and alcohol, insoluble in ammonia, d 3.0066, mp 70C (decomposes)
Derivation: Action of hot nitric acid on selenium.
Hazard: Toxic by inhalation, ingestion, and skin absorption. TLV (as Se): 0.2 mg/m³ of air.
Use: Reagent for alkaloids.

selenous acid anhydride. See selenium dioxide.

Semenov, Nikolai N. (1896-) A Russian chemist and physicist who won the Nobel prize in 1956. He authored books on the chain reaction and problems of chemical kinetics and reactivity as well as many articles. His work concerning thermal combustion and explosion is utilized in rockets and jet engines. He received his doctorate at Leningrad State University.

"Semesan."[28] TM for a wettable powder containing 25.3% hydroxymercurichlorophenol.
Hazard: As for mercury compounds.

"Semesan Bel."[28] TM for a seed disinfectant containing 12.5% hydroxymercurinitrophenol and 3.8% hydroxymercurichlorophenol.
Hazard: As for mercury compounds.

semicarbazide hydrochloride. (carbamylhydrazine hydrochloride; aminourea hydrochloride). CAS: 563-41-7. $H_2NCONHNH_2HCl$.
Properties: White crystals, mp 172–175C (decomposes), soluble in water, insoluble in absolute alcohol and ether.
Derivation: From hydrazine sulfate, potassium or sodium cyanate, and sodium carbonate, or electrolytically by the reduction of nitrourea.
Grade: CP, technical./
Hazard: Toxic by ingestion.
Use: Reagent for aldehydes and ketones, isolation of hormones and isolation of certain fractions from essential oils.

and rubber compounds, treatment of oil well drilling fluids, replacement for cork.

silver. CAS: 7440-22-4. Ag. Metallic element, atomic number 47, Group IB of the Periodic Table, aw 107.868, valence = 1, two stable isotopes.
Properties: Soft, ductile, lustrous, white solid; highest electrical and thermal conductivity of all metals. Excellent light reflector that resists oxidation, but tarnishes in air through reaction with atmospheric sulfur compounds. D 10.53, mp 961C, bp 2212C, thermal conductivity 1.01 cal/cm/sec/C, absorbs oxygen strongly at the melting point. Soluble in nitric acid, hot sulfuric acid, and alkali cyanide solutions; insoluble in water and alkalies. Noncombustible except as powder.
Derivation: Byproduct of operations on copper, zinc, lead, or gold ores, but some smelters still operate on native silver. The recovery ranges from 166 ounces to a few thousandths of an ounce per ton.
See Parkes process, The Pattinson process.
Source: Chief silver ores are native silver, argentite (silver sulfide), and cerargyrite (silver chloride).
Forms available: Pure ("fine"), sterling (7.5% copper), various alloys, plate; ingot, bullion, moss, sheet, wire, tubing, castings, powder, high purity (impurities less than 100 ppm), single crystals, whiskers.
Hazard: Toxic material. TLV (metal): 0.1 mg/m³ of air; (soluble compounds as silver): 0.01 mg/m³ of air.
Use: Manufacture of silver nitrate, silver bromide, photographic chemicals; lining vats and other equipment for chemical reaction vessels, water distillation, etc.; mirrors, electric conductors, such as bus bars; silver plating, electronic equipment; sterilant; water purification; surgical cements; hydration and oxidation catalyst; special batteries; solar cells; reflectors for solar towers; low-temperature brazing alloys; table cutlery; jewelry; dental, medical, and scientific equipment; electrical contacts; bearing metal; magnet windings; dental amalgams. Colloidal silver is used as a nucleating agent in photography and in medicine, often combined with protein.
See "Argyrol."
Note: A sandwich assembly consisting of a layer of silver between two layers of TiO_2 is used to coat the interior of light bulbs, it is said to reduce power consumption by more than 50% and triple the life of the bulb. Each layer of the coating, applied by the sputtering technique is 180 Å thick.

silver acetate. CAS: 563-63-3. CH_3COOAg.
Properties: White crystals or powder, d 3.26, moderately soluble in hot water, soluble in nitric acid.
Hazard: Toxic material. TLV: 0.01 mg/m³ of air.
Use: Lab reagent, oxidizing agent.

silver acetylide. CAS: 13092-75-6. Ag_2C_2.
Properties: White, unstable powder; a salt of acetylene.
Derivation: Reaction of acetylene with aqueous solution of argentous salts.
Hazard: Severe explosion risk when shocked or heated.
Use: Detonators.

silver bromate. $AgBrO_3$.
Properties: White powder, sensitive to light, keep in amber bottle, soluble in ammonium hydroxide, slightly soluble in hot water, decomposed by heat, d 5.2.

silver bromide. CAS: 7785-23-1. AgBr.
Properties: Pale yellow crystals or powder, darkens on exposure to light, finally turning black; d 6.473 (25C); mp 432C; bp decomposes at 700C; soluble in potassium bromide, potassium cyanide, and sodium thiosulfate solutions; very slightly soluble in ammonia water; insoluble in water; light-sensitive.
Derivation: Silver nitrate is dissolved in water and a solution of alkali bromide added slowly. The precipitated silver bromide is washed repeatedly with hot water; the operation must be carried on in a darkroom under a ruby red light.
Use: Photographic film and plates, photochromic glass, laboratory reagent.

silver carbonate. CAS: 534-16-7. Ag_2CO_3.
Properties: Yellow to yellowish-gray powder; contains 78% silver; light-sensitive; soluble in ammonium hydroxide, nitric acid; insoluble in alcohol and water; d 6.077; decomposes at 218C.
Use: Lab reagent.

silver chlorate. (argentous chlorate).
CAS: 7783-92-8. $AgClO_3$.
Properties: White, crystalline solid; mp 230C; decomposes at 270C. D 4.44, partially soluble in water, light-sensitive.
Derivation: Reaction of silver nitrate and sodium chlorate.
Hazard: Oxidizing agent, may react violently when shocked or heated, store away from combustible materials. Toxic by ingestion.
Use: Organic synthesis.

silver chloride. CAS: 7783-90-6. AgCl.
Properties: White, granular powder which darkens on exposure to light, finally turning black; exists in several modifications differing in behavior toward light and in their solubility in various solvents; soluble in ammonium hydroxide, concen-

Hazard: Dangerous, explodes by heat or shock.
Use: Explosive compositions.

2,4,6-trinitro-m-cresol. (cresolite; cresylite). $(NO_2)_3C_6H(CH_3)OH$.
Properties: Yellow crystals; mp 106C; readily soluble *in alcohol, ether, and acetone.*
Derivation: Prepared from m-cresol by a process similar to which picric acid is prepared from phenol.
Hazard: Explodes at 300F (148.8C), severe explosion risk when shocked or heated.
Use: Bursting charges and other high explosive uses.

trinitroglycerin. See nitroglycerin.

trinitromethane. CAS: 517-25-9. $CH(NO_2)_3$.
Properties: White crystals, mp 15C, d 1.469 (25C), decomposes above 25C, *heat of combustion* 746 cal/g, soluble in water.
Derivation: Reaction of acetylene with nitric acid.
Hazard: Explodes on heating, concentrations above 50% in air may explode.
Use: Manufacture of propellants and explosives.

1,3,5-trinitronaphthalene. (naphite). $C_{10}H_5(NO_2)_3$. Commercial preparation is a mixture of isomers which melts at 110C.
Hazard: Explosion risk when shocked or heated.
Use: Explosive, stabilizer for nitrocellulose.

trinitrophenol. See picric acid.

2,4,6-trinitrophenyl methyl ether. See *trinitroanisole.*

trinitrophenylmethylnitramine. See tetryl.

2,4,6-trinitroresorcinol. Legal label name for styphnic acid.

2,4,6-trinitrotoluene. (TNT; methyltrinitrobenzene). CAS: 118-96-7. $CH_3C_6H_2(NO_2)_3$.

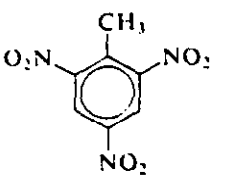

Properties: Yellow, monoclinic needles; d 1.654; mp 80.9C; soluble in alcohol and ether; insoluble in water.
Derivation: Nitration of toluene with mixed acid. Small amounts of the 2,3,4- and 2,4,5-isomers are produced which may be removed by washing *with aqueous sodium sulfite solution.*
Grade: Technical.
Hazard: Flammable, dangerous fire risk, moderate explosion risk, will detonate only if vigorously shocked or heated to 450F (232C). Toxic by ingestion, inhalation, and skin absorption. TLV: 0.5 mg/m³ of air.
Use: Explosive, intermediate in dyestuffs and photographic chemicals.

trinitrotrimethylenetriamine. See cyclonite.

trioctadecyl phosphite. $(C_{18}H_{37}O)_3P$.
Properties: White, waxy solid; mp 45–47C; d *0.940* (25/25C).
Use: Stabilizer in polymers and an intermediate.

tri-n-octylaluminum. $(C_8H_{17})_3Al$.
Properties: Colorless, pyrophoric liquid.
Derivation: Reaction between octene and isobutylaluminum.
Hazard: Flammable, ignites in air.
Use: Polyolefin catalyst.

trioctyl phosphate. (octyl phosphate). $(C_8H_{17})_3PO_4$.
Properties: Liquid, d 0.924 (26C), bp 220–30 (8 mm). Soluble in alcohol, acetone, and ether. Combustible.
Hazard: Toxic by ingestion and inhalation.
Use: Solvent, *antifoaming agent, plasticizer.*

trioctylphosphinic oxide. (TOPO). $(C_8H_{17})_3PO$.
Properties: Solid, mp 55C, min purity 95%.
Use: Reagent for extraction of metals from aqueous and nonaqueous solutions, including fissionable actinide elements.

trioctyl phosphite. See tris-2-ethyl-hexyl phosphite.

triolein. See olein.

tri-o-cresylphosphate. See tricresyl phosphate.

sym-trioxane. (triformol; trioxin; metaformaldehyde). $(CH_2O)_3$ or $\overline{CH_2OCH_2OCH_2O}$. A trimer of formaldehyde, not to be confused with paraformaldehyde, which consists of eight or more formaldehyde units.
Properties: White crystals, formaldehyde odor, mp 62C, sublimes at 115C, flash p 113F (45C) (OC). Soluble in water, alcohol and ether; autoign temperature 777F (413C).

APPENDIX B

GENERIC WORK PLAN
RFI PHASE II SOILS

Corrective Action Plan
RCRA Facility Investigation Phase II Release Assessment
Task A: RFI Phase II Work Plan (Soils)
Naval Weapons Support Center, Crane, Indiana

Part a. RFI Phase II Project Management Plan. This document is a Work Plan submitted as a requirement of the RCRA Corrective Action Plan (CAP), RCRA Facility Investigation (RFI) for Solid Waste Management Units (SWMUs) located within and operated by the Naval Weapons Support Center (NWSC), Crane, Indiana. The facility plans to conduct as part of the CAP surface and shallow subsurface sampling and analysis of soils at identified SWMUs within the NWSC. This Work Plan provides general information on project management, soil sampling and analysis procedures, quality assurance/quality control (QA/QC), data management, and health and safety practices for the proposed Phase II Soils Release Assessment. Details concerning site-specific procedures will be submitted later. Figures 1 and 2 show the location of Crane NWSC. The purpose of the sampling and analysis program is to provide further assessment or confirmation of suspected contamination of soils at identified SWMUs. An Initial Assessment Study (IAS) conducted at the NWSC in 1981 identified and assessed sites posing a potential threat to human health or the environment due to contamination from past hazardous materials operations (Eakes et al, 1983). Additional sites were identified in meetings between Crane personnel and EPA Region V.

A list of the SWMUs scheduled for soils assessment is presented in Table 1. Site numbers reflect the original IAS-designated number and the new number assigned for the Corrective Action investigations. A brief history of operations at Crane NWSC and a description of its physical features are presented in Appendix 1.

The objectives of the RFI Phase II soils assessment are (1) to evaluate the presence or absence of a release to soils at each SWMU and the extent of a release, and (2) to determine the type and concentration of any contaminants released to the soil. The approach will be to obtain soil samples at selected locations at each SWMU to a predetermined depth and to perform physical and chemical analysis of the soil samples. All previous sampling and analysis conducted at the SWMUs will be reviewed prior to initiating new sampling. The following sections provide details of the sampling and analysis procedures.

Part b. RFI Phase II Sampling and Analysis Plan.

(1) **Statement of sampling objectives.** Previous inspections of the SWMUs have identified potential sources of contaminant release to the soil. Soil sampling will be performed to define the extent laterally away from the potential release points and vertically into the soil column, at the ground surface and to a depth of at least 5 ft below ground surface. Sampling will be performed in the immediate vicinity of the potential release point and down-slope particularly in surface drainage ways.

(2) **List of sampling equipment and containers.** Subsurface samples will be obtained primarily with a nominal 3-inch diameter steel split-spoon sampler driven by a hammer from a truck-mounted drilling rig. A stainless steel knife and spatula or spoon will be used to peel

the samples and for placement into containers. Where access to a sampling location cannot be made with the drilling rig, subsurface samples will be obtained with a steel hand auger approximately 3 inches in diameter. Samples will be sealed in containers appropriate to the compound or parameter to be analyzed. Inorganic analytes will be sealed in polyethylene bottles with screw-on lids. Organic analytes will be sealed in wide-mouthed glass jars with Teflon-lined screw-on lids. Amber-colored glass jars are not necessary because the samples will be stored in closed coolers until they are analyzed. Volatile organic analytes will be placed in septum-sealed glass vials. Only IC[illegible]EM certified-clean containers will be used.

(3) **Analytical parameters and test methods.** Previous inspections of the SWMUs resulted in a list of parameters to be analyzed for in subsequent soils investigations. The parameters are generally the explosives compounds RDX, TNT and HMX, heavy metals, and organic solvents. Soil and sediment samples will be analyzed following procedures specified in EPA SW-846, Test Methods for Evaluating Solid Wastes, Physical/Chemical Methods. The analytical methods and detection limits used by the Analytical Lab Group of the U.S. Army Waterways Experiment Station are presented in Table 2. Procedures for analyzing soil samples are identical to those shown for aqueous samples after soil samples are processed. Operating conditions for the gas chromatograph and mass spectrometer (GC/MS) are provided in Tables 3,4, and 5.

In addition to inorganic compounds, various organic compounds including explosives, TCE, a pesticide and other organics will be evaluated in the soil sampling/analysis program. Method 3540 (Soxhlet Extraction) of SW-846 is used by the analytical laboratory to extract non-volatile and semi-volatile compounds from the soil samples. Method 8260 (Gas Chromatography/Mass Spectrometer for Volatile Organics: Capillary Column Technique) is used for extraction and analysis of volatile organics from liquids and solids. The two procedures are described in Appendices 2 and 3, resp. Laboratories analyzing for explosives compounds including RDX, HMX and TNT now commonly use the High Performance Liquid Chromatography (HPLC) method (see Appendix 5).

The ALG routinely runs duplicates and spikes on every first and eighth sample in a sample set as a measure of performance and indication of potential sources of cross-contamination. In addition, a standard (e.g. EPA, NBS or ERA) is run with each project set to assess analytical accuracy. Field blanks will be prepared for each sampling site by filling a jar with distilled water obtained by rinsing the cleaned sampling tool after sampling. Preparation of field blanks provides evidence of proper cleaning of the sampling equipment.

A physical description and classification of sampled soils will also be obtained. A geologist will describe the soils in the field and keep a sample log for each boring. Samples will also be retained in glass jars for subsequent laboratory-determined Unified Soil Classification System (USCS) classification to be performed by the WES Soils Testing Facility. Laboratory classification will consist of a visual classification, a sieve and hydrometer analysis to determine grain size distribution of the sample, determination of natural water content, USCS classification, organic content and density. The sieve analysis determines the gradation of grain sizes ranging from the number 4 sieve (4.76

mm) to the number 200 sieve (0.074 mm). The hydrometer analysis determines the percentage of silt- and clay-sized particles (those passing the number 200 sieve) in the sample. Figure 3 is an example of a grain-size gradation chart and accompanying information.

(4) **Sample types.** Sample types can be considered biased in plan view. Soil boring locations will be selected on the basis of prior studies at each SWMU as discussed above under statement of sampling objectives. Samples will be collected randomly at depth in each boring at preselected intervals to a depth of 5 ft. Field QC samples will consist of trip blanks, equipment rinsates and field blanks as provided in the QA/QC plans below.

(5) **Sample locations, depths and frequency.** Sample locations for each SWMU will be provided Region V at a later date. Sampling depths and frequencies are discussed below in paragraph (7).

(6) **Sampling schedule.** A schedule of sampling activities will be provided Region V at a later date.

(7) **Sampling procedures.**

General guidance. Collection, preparation, packaging and safeguarding of soil samples will follow guidelines presented in "USATHAMA QA Program", Chapter 5, Sample Collection and Management, Sections 5.3.3 (Soil and Sediment Samples), 5.6 (Soils) and 5.7 (Sediments) except as noted below. The USATHAMA guidelines are presented in Appendix 4. Further guidance is provided in Sampling and Chemical Analysis Quality Assurance Requirements for the Navy Installation Restoration Program, NEESA 20.2-047B, June 1988.Sample preservation procedures and holding times for aqueous and solid samples are included in Appendix 4, Table H-1. Additional guidance concerning organic compounds is provided in EPA-SW-846, Test Methods for Evaluating Solid Wastes (Table H-2). Specific procedures are explained below.

Surface samples. Surface scrape samples will be collected at all boring sites. Prior to sampling, surface vegetation, rocks, leaves twigs and other debris will be cleared from the sample point to allow collection of a representative soil sample. Using a 10 cm X 10 cm template to mark the area to be sampled, the surface will be scraped to a depth of 1 cm with a stainless steel trowel or similar implement to yield approximately 100 g of soil. If sod is present, core samples no more than 5 cm deep will be taken using a soil coring device. The sample will be scraped directly into a precleaned glass jar sealed with a Teflon-lined cap. The sample label and a chain-of-custody form will be completed.

Subsurface sampling. Subsurface soil samples will be collected using a truck-mounted drilling rig to drive a nominal 3-inch unlined split spoon. Samples will be taken to refusal or to a maximum depth of 5 ft unless otherwise specified by Crane officials. The split spoon sampler obtains soil samples of approximately 18 inches in length. Following State of Indiana Department of Environmental Management (DEM) guidelines, the first drive sample of each boring site will be split lengthwise and one half discarded. The remainder will be divided into lifts of 6-in, 6-in and 6-in and samples of each lift packaged and analyzed individually. The purpose of this procedure is to prevent compositing of samples in the uppermost part of the soil profile. In subsequent drives only the bottom 6 inches of the drive will be saved and

analyzed. This procedure will produce five soil samples per boring. The sampler will be cleaned thoroughly with detergent and distilled water after sampling at each site. In remote areas or in areas inaccessible to the drilling rig the samples will be taken with a hand auger or other manual sampling device.

The split spoon sampler will be advanced either through a hollow-stem auger or through the open borehole. In the latter case, the hole will be reamed out to a diameter sufficient to allow insertion of the sampler for the next drive without touching the sides of the hole. Both methods will prevent cross-contamination of subsequent drives. The borehole will be advanced by rotary drilling.

At the surface, the sampler will be opened and the sample extracted, peeled, and bottled in the shortest time possible. Peeling is the process that removes the portion of sample which is in direct contact with the sampler. In addition, the ends of the sample will be removed and discarded. Samples for volatiles analysis will be peeled, bottled, and capped within 15 seconds from the time the sampler is opened. All samples will be extruded into wide-mouthed glass jars or other containers with minimal disturbance of the sample. Stainless steel tools will be used to place the peeled samples into the containers. The sample jar or bottle will then be sealed, labeled, and handled in the same manner as the surface soil samples. Sample handling equipment will be cleaned by washing with water and by rinsing with distilled water.

Following collection, soil samples will be placed in locked ice chests (coolers) for storage at a temperature of 4°C. Preservatives will not be required for the soil samples (see Appendix 4, Table H-1). The coolers containing the samples with their accompanying chain-of-custody forms will be transported to the analytical lab for analysis. Transport will be by commercial ground carrier within 24 hours of sampling. A chain-of-custody program will be initiated in the field upon collection of the sample. A seal will be placed on each cooler to ensure that the samples have not been disturbed during transport to the laboratory (Figure 4).

Locations of sampling sites will be marked with wooden stakes and located on a map by taping from landmarks, roads or similar features. Surveying may be required to record locations of sites remote from mapped landmarks.

Blanks. Blanks, or field QC samples will be collected or prepared for every sampling event as directed in NEESA 20.2-047B. Trip blanks are samples which originate from analyte-free water taken from the laboratory or the sampling site and returned to the laboratory with the VOA samples. Equipment rinsates are the final analyte-free water rinse from equipment cleaning collected daily during a sampling event. The rinsates are analyzed for the4 same parameters as the related samples. Field blanks consist of the source water used in decontamination and steam cleaning.

(8) **Rationale for sampling locations, analysis, and analytes.** To be submitted at a later date.

(9) **Environmental conditions at the time of sampling.** Not applicable.

(10) **Chain-of-custody forms and procedures.** A chain-of-custody

program will be initiated in the field upon collection of the sample. Samples will be identified by a standard sample label (Figure 5). The sample labels are sequentially numbered and are accountable. The following information shall be included on the sample label:

1. Site name.
2. Field station number.
3. Date and time of sample collection.
4. Designation of the sample as a grab or composite.
5. Description of the sample location.
6. The signature of the sampler(s).
7. Sample preservation and preservative used.
8. The general types of analyses to be conducted.

The chain-of-custody record will accompany the shipping containers at all times. An example of a chain-of-custody record is shown in Figure (6). Sample collection information will be logged into a bound field book at the time of collection. This record will provide the necessary documentation to trace sample possession from time of collection through sample analysis in the laboratory.

(11) **Decontamination procedures.** Drilling equipment will be decontaminated after use at each sampling site by washing with approved water. The split spoon or other sampler will be cleaned with detergent and water after sampling at each site. The sample handling equipment (tools used to peel, extract, and place the samples in containers) will be cleaned thoroughly by washing with water, drying thoroughly with an approved paper towel, and rinsing with distilled water. Plastic gloves worn by samplers will be discarded after collection of each sample.

(12) **Documentation.** Field logs will be made by the geologist for each sample boring. Figure 7 is an example of a field sample/boring log. The field log documents the sample number, the date of sampling, the depth sampled, provides a field classification of the soil or other material, the type of sampler used, the container number, and job information including type of drill rig, operator's name, site name, boring number and surface elevation if available.

A map will be prepared for each SWMU showing the locations of all sampling stations and pertinent buildings and other structures, roads, streams, and drainage ways. Computer printouts of chemical analysis results will be supplied by the laboratory.

Technical reports of the procedures and findings of the soils investigation for each SWMU will be prepared following data analysis.

(13) **Calibration of field devices.** Two air monitoring devices will be in use by the sampling crew during subsurface sampling to detect the presence of organic vapors and combustible gasses. The devices are the photoionization organic vapor detector (HNu Systems Model) and combustible gas/respirable air unit and are described in Section f. The organic vapor detector will be calibrated relative to benzene concentration and will be set to provide an audible alarm at 75 percent of the threshold limit value (TLV) for benzene. The combustible gas unit is calibrated on methane and will provide an alarm at 25 percent of the lower explosive limit (LEL) of methane in air.

(14) **Sample preservation.** After the samples have been taken, they will be shipped to the laboratory as discussed above. Storage at low temperature is the best way to preserve soil samples. Table

E-1 of Appendix 4 summarizes preservative requirements for soil samples.

Part d. RFI Phase II Quality Assurance/Quality Control Plan.

Data collection and reporting requirements will conform to NEESA Level C standards as defined in NEESA 20.2-047B. QA/QC procedures for sampling and analysis were discussed in Part b. above.

Part e. RFI Phase II Data Management Plan.

(1) **Data Record.** Recorded data will consist of site (SWMU) locations, sampling station (boring) numbers and locations, sample number and depth sampled, date sampled, names of sampling personnel, sample descriptions and other boring log data, chain-of-custody information, parameters measured, laboratory results and analysis of results. Locations will be recorded as map positions on base maps supplied by Crane NWSC. Borings will be located by stakes and the stake locations plotted on the map. Approximate elevation of top of ground at each boring location will be obtained from available topographic maps.

Boring numbers will be recorded in the format:

"Old Rifle Range, 07/09S01/89", where '07/09' are the former and present site (SWMU) numbers, respectively, for the Old Rifle Range, 'S' identifies the sample as a soil sample, '01' is the boring number for this SWMU, and '89' is the year sampled. Sample numbers will be recorded in the format: S01-01, indicating the first sample for soil boring 01. Sample depths will be recorded in feet from the ground surface to the top and bottom of the sample interval.

Chemical laboratory results will be presented as computer printouts generated by the analyzing laboratory and will include the sample number, parameter measured, amount detected (concentration), date analyzed, units used, a lab ID number for each sample, duplicates if any, and results of analysis of blanks. Data will also be tabulated as discussed below.

Physical laboratory results will be presented as computer printouts of soils test results and methods used and as graphs of grain size distribution.

(2) **Tabular Displays.** Tables of data will include field data (sample station number, number of samples per station, depths sampled, date sampled), and laboratory data for chemical and physical testing results.

(3) **Graphical Displays.** The following data will be presented in graphical form:

1. Sample boring locations on base map, 2. Computer-generated 'plume' maps of contaminant concentrations as determined by gridding of laboratory measurements, if appropriate, 3. Cross sections through borings showing vertical distribution of contamination and soil stratigraphy, if apparent. 4. Bar or line graphs showing contamination levels, 5. Other displays as deemed appropriate.

Part f. RFI Phase II Health and Safety Plan.

Soil sampling at the NWSC will require drilling of subsurface borings and sampling of soils at and below the surface. This health and safety plan is intended to (a) describe field activities to identify

potential hazards associated with each activity, (b) insure safety consciousness by each individual involved with the field activities, (c) control exposure to potentially hazardous chemical compounds by specifying protective gear and monitoring procedures commensurate with the anticipated risk, and (d) provide emergency procedures in the event of unanticipated high contaminant concentrations, incident response, and control and disposal of generated waste materials.

Field activities. Subsurface sampling will consist of driving a split spoon sampler by means of a hammer attached to a truck-mounted drilling rig. The field personnel will contact the penetrated soil with their gloved hands in removing the soil from the sampler. The operators will be near the freshly cut and disturbed soils and thus could be subjected to the release of residual chemical vapors. Surface sampling will consist of scraping the top few centimeters of soil into sample jars. Field personnel will be subjected to contact similar to that in subsurface sampling. Neither operation should produce appreciable dust or present a liquid splash hazard. Many of the SWMUs have been previously sampled to some degree, providing prior knowledge of potential hazardous conditions. A few sites, such as the Demolition Area, may present a hazard with unexploded ordnance or buried hazardous chemicals. Those sites will not be sampled until base operations has cleared the sampling area. Specific health and safety precautions will be covered on a site-specific basis.

Field personnel will be informed of the location of emergency medical facilities on base and will be provided a map showing routes to the facilities from the sampling sites. A WES-operated trailer with telephone will be accessible to field personnel.

General Personnel Safety. The monitoring and precautionary measures specified in the following paragraphs are considered reasonable and prudent for general field investigations planned for the soil sampling work. Each employee will have a comprehensive physical examination within the 12 months preceding his/her field involvement to provide medical background information. Upon completion of the project, or annually, whichever occurs first, each employee will have a routine physical examination. Physical examinations will consist of the following:

a. Comprehensive Physical Examination. Basic health history, basic physical examination, routine EKG, chest X-ray, pulmonary function, audio testing, eye evaluation, hemoccult, Chem-screen 26, CBC w/differential, acetylcholinesterase activity, heavy metals in blood to include lead, cadmium, mercury, arsenic, chromium, and strontium: urinalysis.

b. Routine Physical Examination. Basic physical examination, resting EKG, chest X-ray, pulmonary function, SMA-26, urinalysis, audiometric.

Air Monitoring. The most common halogenated organic compounds in industrial use and OSHA allowable inhalation limits are listed in Table 7 (OSHA Safety and Health Standards 29CFR 1910).

Table 7. Limits of Exposure and Detection for Common Organic Solvents.

Solvent	Maximum Allowable Exposure, 8 hrs.*	Sensitivity** Photoionization	Detection*** Limit
Benzene	10 ppm	High	5 ppm
1,1 Dichloroethane	100 ppm	High	-
1,2 Dichloroethane	200 ppm	High	-
Methylene Chloride	500 ppm	High	100 ppm
Trichloroethylene	100 ppm	High	2 ppm

* OSHA Safety and Health Standards (29 CFR 1910) OSHA 2206

** HNu Model PI-101 with 11.7 ev lamp, HNu Systems, Newton, Mass.

*** Draeger Detector Tubes, National Draeger Inc., Pittsburg, PA

Air monitoring efforts will concentrate on monitoring for organic solvents and combustible gas. The presence of dust will be determined visually.

The presence of volatile organic compounds in the air at the drill location will be continuously monitored using a photoionization organic vapor detector (HNu Systems Model 101, Hazardous Waste Detector) and a combustible gas detector (Neotronics Meter, EXOTOX Model 40-OFH).

The photoionization unit is a non-specific detector that can semi-quantitatively determine the concentration of a broad range of potentially hazardous organic compounds in the air. The unit will be calibrated relative to benzene concentration or to standards traceable to benzene. The unit will be set to provide an audible alarm at 75 percent of the threshold limit value (TLV) for benzene. The photoionization unit will be calibrated in accordance with manufacturer's recommendation and checked periodically for proper operation.

The combustible gas/respirable air unit is a catalytic and thermal conductivity unit that measures the concentration of flammable gas, hydrogen sulfide and oxygen levels in the air. The combustible gas sensor is calibrated on methane and will provide an alarm at 25 percent of the lower explosive limit (LEL) of methane in air. The combustible gas/respirable air unit will be calibrated before field work is started and semiannually throughout the period of use as recommended by the manufacturer.

In the event air monitoring indicates levels of combustible gas or organic vapors that exceed the action levels (Table 8), work will be suspended and the work site evacuated. A Crane NWSC industrial hygiene

specialist will be brought onsite to define the specific hazard and specify necessary protective measures which will be implemented before work is resumed.

Table 8. Action Levels for Air Monitoring Instruments.

Instrument	Level	Rationale
Photoionization	40 ppm Benzene equivalent	80 percent of OSHA threshold level for benzene, 8-hr exposure
Combustible gas	1.25 percent methane, equiv. methane	25 percent LEL*

* Lower Explosive Limit

Limiting skin contact. All persons involved in handling soil samples or equipment contaminated with soil from the work site will wear rubber gloves, safety-toe rubber boots, disposable coveralls, hard hats and safety glasses or face shields as conditions warrant. Higher levels of protective clothing will be issued and worn if or when working conditions require them although the need for protection level higher than D is not anticipated for the soil sampling tasks described herein. Protective equipment will be inspected daily. Worn or damaged equipment will be cleaned and discarded or disposed of as contaminated waste.

Decontamination. All tools and equipment contaminated by material from sampling locations will be cleaned with detergent and water or commercial washing compounds and water when removed from that location. The intention is to limit the spread of contamination and prevent cross-contamination from one site to another.

Indemnification. The WES, acting in this project to service and provide expertise to the NWSC, may expose hazardous waste materials that are currently on site. Thus WES denies responsibility as a waste generator on this project. Any materials exposed requiring special disposal procedures remain the property and the responsibility of NWSC.

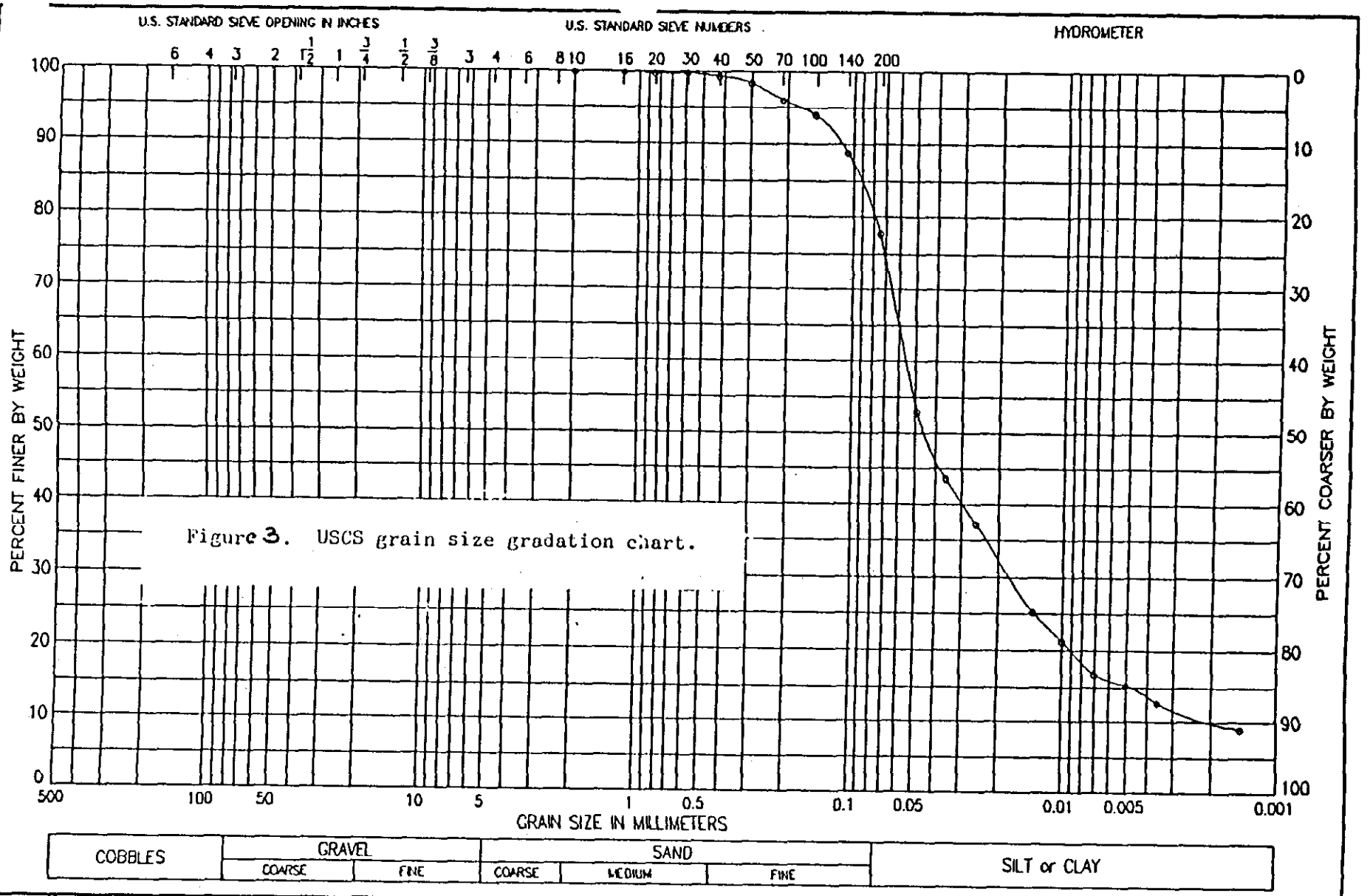

Figure 3. USCS grain size gradation chart.

COBBLES	GRAVEL		SAND			SILT or CLAY
	COARSE	FINE	COARSE	MEDIUM	FINE	

LL	PL	PI	GS	NAT W,%
28	18	10	2.69 EST	30.5

CLASSIFICATION
SANDY CLAY (CL), GRAY

PROJECT MICHAELSVILLE LANDFILL A.P.G.

BORING NO. B-1 SAMPLE NO. 55

DEPTH/ELEV 83.5-85.0 DATE 27OCT88

GRADATION CURVE

CHAIN OF CUSTODY

U. S. ARMY CORPS OF ENGINEERS
WATERWAYS EXPERIMENT STATION
P.O. DRAWER 631
VICKSBURG, MS 39180

United States Army
Corps of Engineers
...Serving the Army
...Serving the Nation

U.S. ARMY CORPS OF ENGINEERS

Station No.	Date	Time	Sequence No.
Station Location			____ Grab ____

____ BOD
____ Solids
____ COD
____ Nutrients
____ Metals
____ Oil & Grease
____ D.O.
____ Bact.
____ Other

Remarks/Preservative:

Samplers:

Serial Tag No. ____

Figure 5. Example of chain-of-custody sample tag. (a) Front. (b) Back.

U.S. ARMY CORPS OF ENGINEERS
OFFICIAL SAMPLE SEAL

Sample No. Date

Signature

Print Name and Title (Inspector, Analyst, Tech.)

SEAL BROKEN BY

Figure 4. Example of tamper-proof seal.

CHAIN OF CUSTODY RECORD
WATERWAYS EXPERIMENT STATION

WORK LEADER (PRINT)	NAME OF SURVEY OR ACTIVITY	DATE OF COLLECTION (DAY MONTH YEAR)	SHEET OF

DESCRIPTION OF SHIPMENT

___PIECE(S) CONSISTING OF___BOX(S)
___ICE CHEST(S); OTHER _____

VOUCHER OR RECEIPT NO.

CONTENTS OF SHIPMENT

LABORATORY SAMPLE NO.	TYPES OF CONTAINERS: CUBITAINER	GLASS JAR	DO BOTTLE	BIO BOTTLE	LABORATORY SAMPLE NO.	TYPES OF CONTAINERS: CUBITAINER	GLASS JAR	DO BOTTLE	BIO BOTTLE
	NO. OF CONTAINERS PER LAB NO.					NO. OF CONTAINERS PER LAB NO.			

PERSONNEL CUSTODY RECORD

RELINQUISHED BY (SAMPLER)	RECEIVED BY	DATE	TIME	REASON FOR CHANGE OF CUSTODY
☐ SEALED ☐ UNSEALED	☐ SEALED ☐ UNSEALED			
RELINQUISHED BY	RECEIVED BY	DATE	TIME	REASON FOR CHANGE OF CUSTODY
☐ SEALED ☐ UNSEALED	☐ SEALED ☐ UNSEALED			
RELINQUISHED BY	RECEIVED BY	DATE	TIME	REASON FOR CHANGE OF CUSTODY
☐ SEALED ☐ UNSEALED	☐ SEALED ☐ UNSEALED			
RELINQUISHED BY	RECEIVED BY	DATE	TIME	REASON FOR CHANGE OF CUSTODY
☐ SEALED ☐ UNSEALED	☐ SEALED ☐ UNSEALED			
RELINQUISHED BY	RECEIVED BY	DATE	TIME	REASON FOR CHANGE OF CUSTODY
☐ SEALED ☐ UNSEALED	☐ SEALED ☐ UNSEALED			
RELINQUISHED BY		DATE	TIME	REASON FOR CHANGE OF CUSTODY
☐ SEALED ☐ UNSEALED	☐ SEALED ☐ UNSEALED			
	RECEIVED BY	DATE	TIME	REASON FOR CHANGE OF CUSTODY
☐ SEALED ☐ UNSEALED	☐ SEALED ☐ UNSEALED			

Figure 6. Chain-of-custody form

BORING LOG
FIELD DATA

Project NWSC Ground - Water Study Site Crane, IN Date:
Location Job No. 441-G150.13GB21/22
Drill Rig Failing Inspector J. Dunbar Operator C. Drake Surface El 764.37 Boring No.

SAMPLE NUMBER	DATE TAKEN 1983	STRATUM FROM	STRATUM TO	DRIVE FROM	DRIVE TO	SAMPLE FROM	SAMPLE TO	TYPE OF SAMPLER	Hyd Press.	Cont.	CLASSIFICATION AND REMARKS
1	25 July	0.0		0.0	0.5	0.0	1.79	Shelby 3" Tube	100	ST	Sandy Clay (CL): brown, soft, damp,
1A				0.5	1.0	1.79	1.94		200	Jar	very fine-grained sand, gravelly
				1.0	1.5				230		(sandstone)
			2.8	1.5	2.0				360		Sample length: 1.94 ft
1B				0.0	2.8	0.0	2.80	5" Folding Auger	*	Jar	Cleanout
				2.0	3.0			6" Rock Bit			Cleanout: room for core barrel
		2.8	--	3.0	8.0	3.0	8.0	4x5-1/2" Core Barrel		Run1	See drilling log page 2
				8.0	9.8	8.0	9.8	" "		Run2	
				9.8	14.8	9.8	14.8	" "		Run3	
				14.8	20.0	14.8	20.0	" "		Run4	
	26 July			20.0	25.0	20.0	25.0	" "		Run5	
				25.0	25.7	25.0	25.7	" "		Run6	
				25.7	30.2	25.7	30.2	" "		Run7	
				30.2	35.0	30.2	35.0	" "		Run8	

WES FORM JAN 74 819 EDITION OF NOV 1971 MAY BE USED

*Jar sample given to NWSC for chemical analysis

Sheet 1 of 7 Sheets

Figure 7. Boring log with sample data.

Table 1. RCRA Solid Waste Management Units identified for Phase II Release Assessment, Soils.

Priority	Solid Waste Management Unit	Site Number
1.	Rockeye Munitions Facility	10/15*
2.	Demolition Area	06/09
3.	Old Rifle Range	07/09
4.	Pesticide Control Area	09/05
5.	Old Burning Pit	05/03
6.	McComish Gorge	04/02
7.	Mustard Gas Burial Grounds	01/12
8.	Old Storage Bldg 225	11/00
9.	Load & Fill Area, Bldg 106 Pond	08/17
10.	Mine Fill A	12/14
11.	Mine Fill B	13/14
12.	Road & Grounds Area	15/06
13.	Load & Fill Area Bldgs	18/13
14.	Pyrotechnic Test Area	19/00
15.	CAAA QA/QC Test Area	20/00
16.	DRMO Storage Lot	21/00
17.	Lead Azide	22/00
18.	Battery Shop, Bldg 36	23/00
19.	Sludge Drying Beds	24/00
20.	Sanitary Landfill and Lithium Batteries	14/00

* Site Number= WES & HMTC No./IAS No.

Table 2

Analytical Methods

Parameter	Method	Detection* Limit (ppm)	Method Number	Reference
Halogenated Hydrocarbon Pesticides	Gas Chromatography - Electron Capture	.00001	608	U.S. EPA 1984
Polychlorinated Biphenyls	Gas Chromatography - Electron Capture	.0001	608	U.S. EPA 1984
Phenoxy Acid Herbicides	Gas Chromatography - Electron Capture	.00005	509B	APHA 1985
Volatile Organic Compounds	Gas Chromatography/Mass Spectrometry	.005	624	U.S. EPA 1984
Acid Extractable Organic Compounds	Gas Chromatography/Mass Spectrometry	.005	625	U.S. EPA 1984
Base-Neutral Extractable Organic Compounds	Gas Chromatography/Mass Spectrometry	.005	625	U.S. EPA 1984
Antimony	Atomic Absorption - Furnace	.005	204.2	U.S. EPA 1984
Arsenic	Atomic Absorption - Furnace	.001	206.2	U.S. EPA 1979
Barium	Atomic Emission - DCP	.010	D-4190	ASTM 1984
Beryllium	Atomic Emission - DCP	.005	D-4190	ASTM 1984
Cadmium	Atomic Absorption - Furnace	.0001	213.2	U.S. EPA 1979
Chromium, Total	Atomic Absorption - Furnace	.001	218.2	U.S. EPA 1979
Copper	Atomic Absorption - Furnace	.001	220.2	U.S. EPA 1979
Lead	Atomic Absorption - Furnace	.001	239.2	U.S. EPA 1979
Mercury	Atomic Absorption - Cold Vapor	.0002	245.1	U.S. EPA 1979
Nickel	Atomic Absorption - Furnace	.003	249.2	U.S. EPA 1979
Selenium	Atomic Absorption - Furnace	.002	270.2	U.S. EPA 1979
Silver	Atomic Absorption - Furnace	.001	272.2	U.S. EPA 1979
Thallium	Atomic Absorption - Furnace	.001	279.2	U.S. EPA 1979

(Continued)

* The detection limit is determined on clean water samples and will vary significantly depending on sample matrix.

References: American Public Health Association, American Water Works Association, Water Pollution Control Federation. 1985. Standard Methods for the Examination of Water and Wastewater, 16th edition. APHA, Washington, D.C.

United States Environmental Protection Agency. 1979. Methods for Chemical Analysis of Water and Wastes. EPA 600/4-79-020. U.S. EPA, Cincinnati, Ohio.

United States Environmental Protection Agency. 1984. Guidelines establishing test procedures for the analysis of pollutants under the Clean Water Act, in Federal Register 49(209): 43234-43442.

Table 2 (Continued)

Parameter	Method	Detection* Limit(ppm)	Method Number	Reference
Zinc	Atomic Absorption - DCP	.001	D4190	ASTM 1984
Chemical Oxygen Demand	Colorimetric - Automated	5.0	410.4	U.S. EPA 1979
Oil and Grease	Spectrophotometric - Infrared	5.0	413.2	U.S. EPA 1979
Total Organic Carbon	Wet Oxidation - Infrared	1.0	505C	APHA 1985

Table 3

Gas Chromatograph/Mass Spectrometer Operating Conditions - Volatiles

INSTRUMENT	HEWLETT PACKARD MODEL 5993C
COLUMN	6' x 2 MM I.D. 1% SP-1000 ON 60/80 MESH CARBOPACK B
INJECTION PORT TEMPERATURE	180°C
INITIAL OVEN TEMPERATURE	45°C (3 Minutes)
RAMP	8°C/MIN
FINAL OVEN TEMPERATURE	220°C
SOURCE TEMPERATURE	180°C
TYPE OF IONIZATION	ELECTRON IMPACT, POSITIVE ION
ELECTRON ENERGY	70 VOLTS
SCAN TIME	2 SECONDS
SCAN RANGE	35 AMU to 260 AMU
CARRIER GAS	HELIUM AT 30 ML/MIN
PURGE TIME	12 MINUTES
DESORPTION TIME	4 MINUTES
DESORPTION TEMPERATURE	180°C
TRAP SORBENTS	TENAX, SILICA GEL, CHARCOAL
DATA SYSTEM FOR QUANTITATION	HEWLETT-PACKARD

Table 4

Gas Chromatograph/Mass Spectrometer Operating Conditions

Base/Neutrals and Acid-Phenols

Instrument	Hewlett-Packard 5985B
Column	30 m x 0.32 mm i.d. SE-54 fused silica capillary 0.25-um film thickness
Injection port temperature	250°C
Initial oven temperature	45°C (3 minutes)
Ramp	8°C/min
Final oven temperature	300°C
Source temperature	200°C
Type of ionization	Electron impact, positive ion
Electron energy	70 volts
Scan time	1.08 seconds
Scan range	35 amu to 450 amu
Injection mode	Splitless
Split delay	0.6 minutes
Carrier gas	Helium

Table 5

Gas Chromatographic Operating Conditions

INSTRUMENT	Hewlett-Packard 5880A Gas Chromatograph
OVEN TEMP PROFILE	Initial Value 80°C
	Initial Time 1.50 min
	Level 1
	PRGM Rate 30.00 °C/min
	Final Value 160°C
	Final Time 5.00 min
	Level 2
	PRGM Rate 3.00 °C/min
	Final Value 260°C
	Final Time 100.00 min
CARRIER GAS PRESSURE	15 psi
INJECTOR TEMPERATURE	250°C
DETECTOR TEMPERATURE	325°C
COLUMN	30 M SPB608
	30 M D85
DETECTOR	63 Ni electron capture

APPENDIX 2

High Performance Liquid Chromatography (HPLC) Method for Determining Concentrations of Explosives in Water (Source: Jenkins, T.F., Miyares, P.H., and Walsh, M. E., 1988, "An improved RP-HPLC method for determining nitroaromatics and nitramines in water," Cold Regions Research and Engineering Laboratory, Special Report 88-23, September.

APPENDIX B: METHOD DOCUMENTATION IN USATHAMA (1987) FORMAT

Reversed-Phase HPLC Method for the Determination of Nitroaromatics and Nitramines in Water

I. Summary

A. Analytes: The following analytes can be determined using this analytical method: HMX, RDX, 135TNB, 13DNB, 246TNT, 24DNT, 26DNT, NB, 2NT, 3NT, 4NT and TETRYL.

B. Matrix: This method is suitable for the determination of nitroaromatics and nitramines in a water matrix.

C. General Method: This method involves diluting the water sample 1:1 with methanol, mixing thoroughly, filtering and determining by reversed-phase HPLC on an LC-18 column, using an eluent of 1:1 (V/V) water-methanol, and UV detection at 254 nm.

II. Application

A. Tested Concentration Range: This method was found to be linear over the following concentration ranges: HMX (10-203 μg/L) RDX (10-201 μg/L), 135TNB (2-40 μg/L), 13DNB (2-40 μg/L), 246TNT (2-36 μg/L), 24DNT (2-40 μg/L), 26DNT (2-40.1 μg/L), NB (3-64 μg/L), 2NT (11-214 μg/L), 3NT (11-221 μg/L), 4NT (13-256 μg/L), and TETRYL (9-184 μg/L).

B. Sensitivity: The response of the UV detector at 254 nm for the various analytes is presented below.

Analyte	Sensitivity*
HMX	9.5×10^{-5}
RDX	8.0×10^{-5}
135TNB	7.2×10^{-5}
13DNB	4.8×110^{-5}
NB	4.4×10^{-5}
246TNT	4.3×10^{-5}
26DNT	3.4×10^{5}
24DNT	3.9×10^{-5}
2NT	3.5×10^{-5}
3NT	2.1×10^{-5}
4NT	2.0×10^{-5}
TETRYL	2.6×10^{-4}

* Absorbance units at the Certified Reporting Limit.

C. Reporting Limits: Certified Reporting Limits (CRL) for the following analytes were determined over a 4-day period using the method of Hubaux and Vos as described in the USATHAMA Installation Restoration Program Quality Assurance Program (1987). CRL values for the various analytes are given below.

Analyte	Certified Reporting Limit (μg/L)
HMX	13
RDX	14
135TNB	7.3
13DNB	4.0
NB	6.4
246TNT	6.9
26DNT	9.4
24DNT	5.7
2NT	12
3NT	7.9
4NT	8.5
TETRYL	44

D. Interferences: Either 24DNT or 26DNT can be determined using this protocol, however, their retention times differ by only 0.2 min. Thus a large amount of either would preclude the low level determination of the other. The method was also qualitatively tested for a number of potential interferences. Retention times for certified analytes and potential interferences on LC-18 and LC-CN are presented in Table 1. Use of LC-CN for second column confirmation has proven satisfactory.

Table 1. Retention times and capacity factors for primary analytes and potential interferences on LC-18 and LC-CN columns eluted with 1:1 V\V water-methanol at 1.5 mL/min.

	Retention Time (min)		Capacity Factor (k)*	
Substance	LC-18	LC-CN	LC-18	LC-CN
HMX	2.44	8.35	0.49	2.52
RDX	3.73	6.15	1.27	1.59
135TNB	5.11	4.05	2.12	0.71
13DNB	6.16	4.18	2.76	0.76
246TNT	8.42	5.00	4.13	1.11
24DNT	10.05	4.87	5.13	1.05
TETRYL	6.93	7.36	3.23	2.11
NG	7.74	6.00	3.72	1.53
NB	7.23	3.81	3.41	0.61
3NT	14.23	4.45	7.68	0.88
4NT	13.26	4.41	7.09	0.86
2NT	12.26	4.37	6.48	0.84
2ADNT	9.12	5.65	4.56	1.38
4ADNT	8.88	5.10	4.41	1.15
SEX	2.40	5.07	0.46	1.14
TAX	2.78	3.70	0.70	0.56
245TNT	8.44	5.89	4.15	1.49
24DANT	3.16	4.20	0.93	0.77
26DANT	2.39	3.70	0.46	0.56
26DNT	9.82	4.61	4.99	0.95
Benzene	11.22	3.48	5.84	0.47
Toluene	23.0	3.93	13.02	0.66

* Capacity factors are based on an unretained peak for nitrate at 1.71 min on LC-18 and 2.00 min on LC-CN.

E. Analysis Rate: Approximately 25 samples and working standards can be prepared and analyzed in an 8-hour day provided that stock solutions are already prepared and that the instrumentation is equipped with an auto sampler.

F. Safety Information: The normal safety precautions appropriate to use of flammable organic solvents should be employed.

III. Apparatus and Chemicals

A. Glassware/hardware:

1) Filters: 0.5-μm Millex-SR, disposable (1/sample).

2) Pippettes: 50 mL (1), 10 mL (2), 5 mL (20), 4 mL (1), 2 mL (2), 1 mL (8) volumetric, glass.

3) Volumetric flask: 100 mL (14), 250 mL (6), 200 mL (6), 50 mL (2).

4) Scintillation vials: 20 mL, glass (2/sample).

5) Auto sampler vials: glass (Septa Teflon faced) (1/sample).

6) Disposable springs: Plastipak, 10 mL (1/sample).

B. Instrumentation:

1) HPLC Perkin Elmer Series 3 or Spectra-Physics SP8810 pump (or equivalent), an injector equipped with a 100-μL injection loop and a Spectra-Physics SP8490 UV detector set at λ = 254 nm (or equivalent fixed UV-254 or variable set at 254 nm). Both RP-HPLC columns are eluted at 1.5 mL/min with a 1:1 V/V methanol-water eluent.

2) Strip chart recorder (Linear 500 or equivalent).

3) Digital Integrator (HP3393A or equivalent).

4) Autosampler (optional) (Dynatech Model LC-241 or equivalent).

5) LC-18 (Supelco) RP-HPLC column 25-cm x 4.6-mm (5 μm).

6) LC-CN (Supelco) RP-HPLC column 25-cm x 4.6-mm (5 μm).

C. Analytes:

1) HMX (octahydro-1,3,5,7-tetranitro-1,3,5,7-tetrazocine)
BP: decomposes
MP: 282°C
Solubility in water at 22.5°C: 5.0 μg/L
Octanol/water partition coefficient: 1.3
CAS #2691-41-0.

2) RDX (hexahydro-1,3,5-trinitro, 1,3,5-tetrazine)
BP: decomposes
MP: 203.5°C
Solubility in water at 25°C: 60 μg/L
Octanol/water partition coefficient: 7.5
CAS #121-82-4.

3) 135TNB (1,3,5-trinitrobenzene)
BP: decomposes
MP: 122°C
Octanol/water partition coefficient: 15
CAS #25377-32-6.

4) 13DNB (1,3-dinitrobenzene)
BP: 302°C
MP: 90°C
Octanol/water partition coefficient: 31
CAS #99-63-01.

5) TETRYL (methyl 2,4,6-trinitrophenylnitramine)
BP: 187°C
MP: 131°C
Octanol/water partition coefficient: 43
CAS #479-45-8.

6) 246TNT (2,4,6-trinitrotoluene)
BP: 280°C (explodes)
MP: 80.1°C
Solubility in water: 130 mg/L
Octanol/water partition coefficient: 68
CAS #118-96-7.

7) 24DNT (2,4-dinitrotoluene)
BP: 300°C (decompose)
MP: 70°C
Solubility in water: 300 mg/L
Octanol/water partition coefficient: 95
CAS #121-14-2.

8) 26DNT (2,6-dinitrotoluene)
MP: 66°C
Octanol/water partition coefficient: 97
CAS # 606-20-2.

9) NB (nitrobenzene)
BP: 211°C (Flashpoint 88°C)
MP: 5.7°C
Solubility in water: 2 g/L
Octanol/water partition coefficient: 71
CAS #98-95-3.

10) 2NT (ortho-nitrotoluene)
BP: 225°
MP: -4 to -3°C
Octanol/water partition coefficient: 171
CAS #88-72-2.

11) 4NT (para-nitrotoluene)
BP: 238°
MP: 54°C
Octonal/water partition coefficient: 202
CAS #99-99-0.

12) 3NT (meta-nitrotoluene)
BP: 231°
MP: 15°C
Octonal/water partition coefficient: 263
CAS #99-08-1.

D. Reagents and SARMS:

1) HMX-SARM quality
2) RDX-SARM quality
3) TNB-SARM quality
4) DNB-SARM quality
5) TETRYL-SARM quality
6) TNT-SARM quality
7) 24DNT-SARM quality
8) 26DNT-SARM quality
9) NB-SARM quality
10) 2NT-Reagent grade
11) 3NT-Reagent grade
12) 4NT-Reagent grade
13) Methanol-HPLC grade
14) Water-regents grade

IV. Calibration

A. Preparation of Standards: Standards for each analyte were dried to constant weight in a vacuum desicator in the dark. About 0.1 gm (100 mg) of each dried SARM was weighed out to the nearest 0.1 mg and transferred to individual 100-mL volumetric flasks and diluted to volume with HPLC grade

acetonitrile. Stock standards are stored in a refrigerator at 4°C in the dark. Stock standards are usable for periods up to a year after the date of preparation.

If both 24DNT and 26DNT are to be determined, two separate combined analyte stock standards must be prepared. For stock standard #1, 10.0 mL of the HMX and RDX stock standards and 5.0 mL of the 135TNB, 13DNB, NB, 246TNT and 24DNT stock standards are combined in a 500-mL volumetric flask and diluted to volume with methanol. This solution contains 20,000 μg/L of HMX and RDX and 10,000 μg/L of 135TNB, 13DNB, NB, 246TNT and 24DNT. Stock solution #2 is prepared by combining 10.0 mL of the TETRYL and 5.0 mL of the 26DNT, 2NT, 3NT and 4NT stock solutions in a 500-mL volumetric flask and diluting to volume with methanol. This solution contains 20,000 μg/L of TETRYL and 10,000 μg/L of 26DNT, 2NT, 3NT and 4NT.

A 10.0-mL aliquot of combined stock standard #1 is pipetted into a 100-mL volumetric flask and diluted to volume with methanol, giving a concentration of approximately 2000 μg/L HMX and RDX, and approximately 1000 μg/L of the remaining analytes. This solution will be referred to as Solution A. In a similar fashion, a 10.0-mL aliquot of combined stock standard #2 is diluted to 100 mL with methanol giving a concentration of 2000 μg/L of TETRYL and 1000 μg/L of 26DNT, 2NT, 3NT and 4NT. This solution will be referred to as solution AA.

From Solution A and AA, two identical series of working standard are prepared as described below.

Calibration Standards

STD	Aliquot of Solu. A (mL)	Size of Vol. Flask (mL)	Solution Conc. (µg/L) HMX, RDX	Solution Conc. (µg/L) 135TNB, 13DNB, NB 246TNT, and 24DNT
B	25.0	50	1000	500
C	25.0	100	500	250
D	10.0	100	200	100
E	5.0	100	100	50
F	5.0	200	50	25
G	1.0	100	20	10
H	10.0 of E	100	10	5
I	5.00 of E	100	5	2.5

Calibration Standards

STD	Aliquot of Solu. AA (mL)	Size of Vol. Flask (mL)	Solution Conc. (µg/L) TETRYL	Solution Conc. (µg/L) 26DNT, 2NT, 3NT and 4NT
BB	25.0	50	1000	500
CC	25.0	100	500	250
DD	10.0	100	200	100
EE	5.0	100	100	50
FF	5.0	200	50	25
GG	1.0	100	20	10
HH	10.0 of EE	100	10	5
II	5.00 of EE	100	5	2.5

B. Initial Calibration: All of the standards are diluted 5/5 (V/V) with water in scintillation vials and well shaken (by hand) before analyzing. Duplicate injections of each standard over the concentration range of interest are made in a random order. Peak areas or peak heights are obtained for each analyte. Retention times for the analytes under these conditions are presented in Table 1.

C. Analysis of Calibration Data: The acceptability of a linear model with zero intercept is assessed using the protocol specified in the USATHAMA QA Program (2nd Edition, March 1987). Experience indicates that a linear model with a zero intercept is appropriate. Thus the slope of the best fit

regression line is equivalent to a response factor that can be compared with values obtained from replicate analyses of a single standard each day.

D. Daily Calibration: Standards B and BB, described above, are used for daily calibrations after each are diluted 5/5 (V/V) with water. Standards B and BB can be used for a period of 28 days after preparation. Standards are analyzed in triplicate at the beginning of each day, singly after the last sample of the day, and singly at the midway point of the analysis of each day. Response factors for each analyte are obtained over the course of the day and compared with the response factors obtained for the initial calibration.

The mean response factors for daily calibration must agree within ± 25% of the response factors obtained for the initial calibration for the first seven calibrations. Subsequently, response factors must agree within two standard deviations of the initial calibration. If these criteria are not met, a new initial calibration must be obtained.

V. Certification Testing

Individual analyte certification stock solutions are prepared in an identical manner to that described for the calibration stock standards. As with calibration standards, two sets of certification solutions are required if 26DNT and 24DNT or NB and TETRYL are to be included. Combined analyte stock certification standard solutions are also prepared in the manner described for the combined calibration stock standards.

From the combined certification stock solutions, 25.0-mL aliquots are pipetted into individual 500-mL volumetric flasks and diluted to volume with reagent grade water, giving solutions with concentrations of approximately

1000 μg/L of HMX, RDX and TETRYL and approximately 500 μg/L of the remaining analytes.

A series of diluted certification solutions are prepared from these solutions by diluting with water as follows:

Certification Solutions

Level	Aliquot of Solu. A (mL)	Size of Vol. Flask (mL)	Certification Solution 1 (μg/L) HMX, RDX	Certification Solution 1 (μg/L) 135TNB, 13DNB, NB 246TNT, 24DNT	Certification Solution 2 (μg/L) TETRYL	Certification Solution 2 (μg/L) 26DNT, 2NT, 4NT, 3NT
50X	-	-	1000	500	1000	500
70X	100.0	250	400	200	400	200
10X	50.0	250	200	100	200	100
5X	25.0	250	100	50	100	50
2X	10.0	200	40	20	40	20
1X	5.0	200	20	10	20	10
0.5X	10.0 mL or 5X	100	10	5	10	5

Certification test samples are processed as described below.

VI. Sample/Solution Storage

Combined stock standards should be refrigerated at 4°C, stored in the dark and be used within 30 days of preparation. Certification solutions and samples should be prepared the day of the analysis.

VII. Procedure:

A. Sample Preparation: Samples and certification solutions are prepared for analysis by combining a 5.00-mL aliquot with an equal volume of methanol in scintillation vials, shaking thoroughly and filtering through 0.5-μm Millex-SR filters. The first 3 mL of solution is discarded, and the remainder is collected in a clean scintillation vial. These filtered solutions will be referred to as sample solutions.

B. Determination: Determination of analyte concentration in the sample solutions is obtained by RP-HPLC-UV at 254 nm. A 100-μL injection loop is flushed with 500 μL of sample solution and injected onto an LC-18 column eluted with 1.5 mL/min of 1:1 V/V methanol-water. Retention times and capacity factors for the analytes of interest and a number of potential interferences are given in Table 1 for both LC-18, the primary column, and LC-CN, the confirmation column. Chromatograms obtained for the primary analytes are shown in Figure 1.*

VIII. Calculation

A. Response factors: Since a linear calibration curve with zero intercept is to be expected, calculations of results on a daily basis are obtained using response factors calculated for each analyte. The mean response ($\bar{R}$) for each analyte from repeated determinations of Standards B and BB is obtained in either peak area or peak height units. The response factor (RF) for each analyte is obtained by dividing the mean response by the known concentration (C) in units of μg/L

$$RF = \frac{\bar{R}}{C} \quad . \qquad (1)$$

B. Analytical Concentration: The concentrations (μg/L) of each analyte (C_a) are obtained by dividing the response for each analyte (R_a) by the appropriate response factor (RF_a)

$$C_a = \frac{R_a}{RF_a} \quad . \qquad (2)$$

* Editor's note: included here as the bottom portion of Figure 2.

IX. Daily Quality Control

A. Control spikes: Spiked water samples are prepared as described for Class 1 method in the USATHAMA QA Program (2nd Edition, March 1987). This requires the use of a method blank, a single spike at two times the certified reporting limit and duplicate spikes at ten times the certified reporting limit for each analytical lot. Control spikes are prepared using the appropriate spiking solution in an identical manner as described in Section V.

B. Control Charts: The control charts required are described for Class 1 methods in USATHAMA QA Program (2nd Edition, March 1987). This will require use of standard Shewhart $\bar{X}$ and R charts for the duplicate high spike and moving average $\bar{X}$ and R charts for the single low spike. Details on the charting procedures required are specified in USATHAMA QA Program (2nd Edition, March 1987).

☆ U. S. GOVERNMENT PRINTING OFFICE: 1988--600-057--82059

END

Appendix 2

APPENDIX C

EXCERT FROM ALG SUBMITAL TO THE NAVY

Appendix F

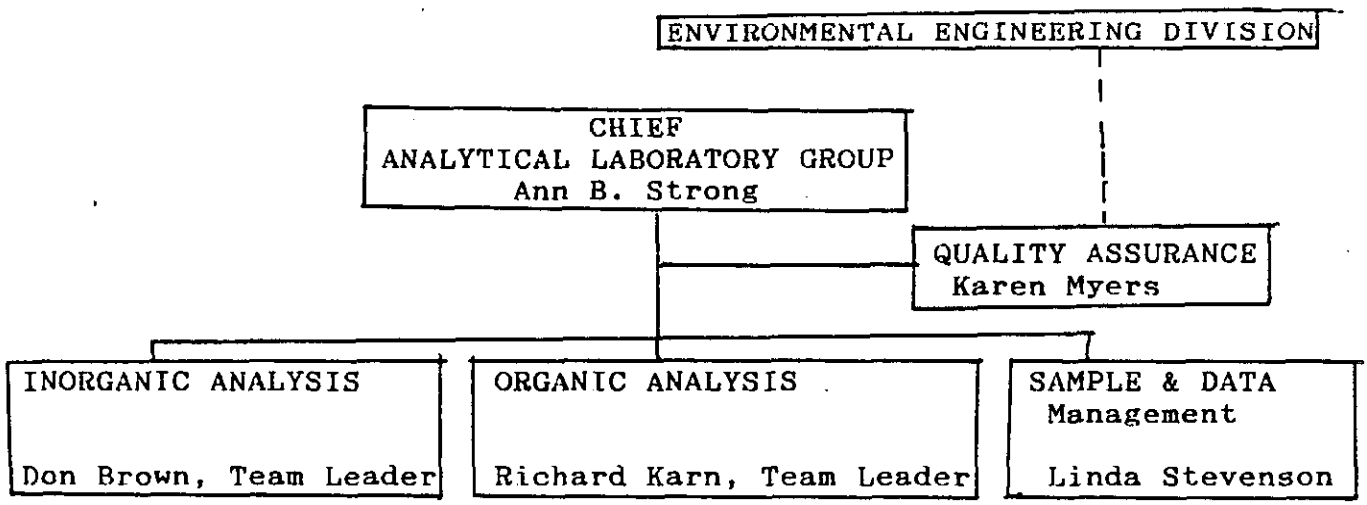

DUTIES

Ann B. Strong, GM 13, Chemist supervises overall activities of the ALG, including final check of all data prior to submission to customer.

Richard Karn, GS-12, Chemist has oversight for all organic analysis and is GC/MS expert.

Don Brown, GS-11, Chemist schedules all inorganic analysis and is an experienced analyst using the autoanalyzer, the DCP, the ICAP and the GFAA.

Linda Stevenson, GS-6, Physical Science Technician is responsible for sample and data management keeping track of all samples received, computer entry and tracking of all samples, fiscal reports, data reports.

Newberry Brown, GS-11, Chemist is primary gas chromatograph operator.

Glennard Warren, GS-11, Chemist is primary GFAA operator and also performs autoanalyzer analyses.

Karen Myers, GS-11, Biologist is experienced in operation of DCP and GC and serves as QA officer. (on long term leave September 1988-August 1989)

Agnes Morrow, GS-09, Chemist is experienced in organic extractions, and is secondary GC operator, also performs IR analyses.

Jeffretha Christian, GS-06, Physical Science Technician performs mercury and TOC analyses under Don Brown's oversight.

Willar Tyler, IPA Chemist for 7 years, performs digestions, autoanalyzer analyses, and other wet chemistry analyses.

6/89

Appendix D

ALG PROCEDURES- FY 89

References:

1. U. S. Environmental Protection Agency, Methods for Chemical Analysis of Water and Wastes, EPA 600/4-79-020, March 1979 and EPA 600/4-82-055 Dec 1982. Environmental Monitoring and Support Laboratory, Cincinnati, OH 45268.

2. U. S. Environmental Protection Agency, Test Methods for Evaluating Solid Waste, SW-846 Third Edition, November 1986 with December 1988 revisions. Office of Solid Waste and Emergency Response, Washington, DC 20460.

3. U. S. Environmental Protection Agency, Manual of Analytical Methods for the Analysis of Pesticides in Humans and Environmental Samples, EPA-600/8-80-038, June 1980. Health Effects Research Laboratory, Research Triangle Park, NC 27711.

4. Federal Register, "Guidelines Establishing Test Procedures for the Analysis of Pollutants Under the Clean Water Act", Vol 49, No. 209, Friday, October 26, 1984.

5. Plumb, Russell H.,Jr. Procedures for Handling and Chemical Analysis of Sediment and Water Analysis, EPA/CE-81-1 May 1981. Environmental Laboratory, U. S. Army Engineer Waterways Experiment Station, Vicksburg, MS 39180.

6. American Public Health Association, Standard Methods for the Examination of Water and Wastewater 16th Edition, 1985. 1015 Fifteenth Street NW, Washington, DC 20005.

7. ASTM, 1987 Annual Book of ASTM Standards, Water and Environmental Technology Vol 11.01 & 11.02. 1987. 1916 Race Street, Philadelphia, PA 19103.

8. U. S. Environmental Protection Agency, Chemistry Laboratory Manual for Bottom Sediments and Elutriate Testing March 1979. Region V Central Regional Laboratory, 536 Clark Street, Chicago, IL 60605

9. Palermo, Michael R. "Development of a Modified Elutriate Test for Estimating the Quality of Effluent from Confined Dredged Material Disposal Areas" Technical Report D-86-4. August 1986. Department of the Army Waterways Experiment Station, Corps of Engineers, P. O. Box 631, Vicksburg, Ms 39180.

6/89

cleaning procedures similar to those employed for laboratory glassware are used. Certificates of contamination checks are filed and lot numbers of bottles shipped to sample collectors are maintained in a log book.

SAMPLE SHIPPING PROCEDURES

The Analytical Laboratory Group (ALG) at WES is not normally involved with the actual field collection of samples. However, the ALG frequently provides sample bottles as described above. The field crew is requested to initiate chain-of-custody procedures for projects requiring chain-of custody using appropriate forms (WES form 2196). Field personnel are requested to label and identify samples to meet project specifications. They are given instructions as to the proper containers to use with the intended analyses, the proper preservation technique, and volumes needed.

For chain-of-custody samples, shipping containers are to be sealed, whether transported by field personnel or shipped by commercial carrier. Samples are to shipped with sufficent ice to maintain a 4° C temperature and with sufficient packing to prevent breakage.

SAMPLE RECEIPT AND LOG-IN PROCEDURES

Upon receipt at the laboratory, the sample management officer fills out a cooler receipt form (copy attached).

COOLER RECEIPT FORM

PROJECT:_____

Cooler received on_____ and opened on _____ by

Signature_____

1. Were custody seals on outside of cooler?----------YES NO
   If yes, how many and where?_____
   Were signature and date correct?----------YES NO

2. Were custody papers taped to lid inside cooler-------YES NO

3. Were custody papers properly filled out(ink, signed)-YES NO

4. Did you sign custody papers in the appropriate place?YES NO

5. What kind of packing material was used?_____

6. Was sufficient ice used(if appropriate)?----------YES NO

7. Were all bottles sealed in separate plastic bags?----YES NO

8. Did all bottles arrive in good condition(unbroken)?--YES NO

9. Were all bottle labels complete(#,date, signed,anal., preserv. etc.)? YES NO

10. Did bottle labels and tags agree with custody papers?YES NO

11. Were correct bottles used for tests indicated?------YES NO

12. Were VOA vials checked for absence of bubbles?------YES NO

13. Did each bottle contain sufficient sample?----------YES NO

14. Were acid/base preserved samples checked with pH paper?----------Yes NO

Explain any discrepancies------->

Receipt of chain-of-custody samples is recorded in a permanent receipt book. The sample collector or project manager is notified of any discrepancies noted on the cooler receipt form.

If samples are delivered by WES personnel, they are required to fill out WES Form 2079 with the information indicated by asterisks and to sign a sample receipt, WES Form 2118. The ALG sample management officer then verifies that the number of samples and the sample identification are as stated on Form 2097.

If samples are received by commercial carrier, Form 2097 is filled out by the sample management officer. The WES uses preprinted consecutively numbered duplicate gummed labels to identify samples. One label is placed on the sample bottle and the other label is placed on Form 2079 under the heading Lab I.D. No. next to the corresponding Project I. D. NO. This information is also entered into a permanent log book, WES Form 2108 (copy attached). The estimated cost is calculated, entered onto the Sample Receipt Form 2118, and the original copy returned to the Project manager.

All samples except volatiles are stored in the locked walk-in cooler which is maintained at 4° and equipped with an alarm system that goes off when the temperature deviates by more than $\pm$ two degrees. A separate refrigerator is maintained for volatile analysis and and temperatures are recorded in a refrigerator log. Two ALG employees have keys to the cooler and a permanent log is maintained to check chain-of-custody samples in and out of the cooler for analysis. The analyst is required to keep chain-of-custody samples behind locked

ALG SAMPLE RECEIPT	DIVISION	BRANCH	
PROJECT NAME	JOB NO.	DATE RECEIVED	NO. SAMPLES

SAMPLE NO.	PARAMETERS	ESTIMATED COST

PROJECT REP SIGNATURE	DATE	ALG SAMPLE RECIPIENT SIGNATURE	DATE

WES FORM MAR 77 2118

COPY 1

ALG SAMPLE RECEIPT	DIVISION	BRANCH	
PROJECT NAME	JOB NO.	DATE RECEIVED	NO. SAMPLES

SAMPLE NO.	PARAMETERS	ESTIMATED COST

PROJECT REP SIGNATURE	DATE	ALG SAMPLE RECIPIENT SIGNATURE	DATE

WES FORM MAR 77 2118

COPY 2

G-7A

A. L. G. SAMPLE LOG

* Chain of Custody

SHEET NO. 02806 TO

LAB NO.	JOB NO.	SOURCE	NO. ANALYSES / NO. SAMPLES	DATE RECEIVED	INITIAL COST	SPECIAL COST	DATE DATA RETURNED	DATE BOTTLES RETURNED	ANALYSES REQUIRED
2806-2811	CQETN393A1E6100	Calcosiew (NOD)	78 / 6	26 May 89	2154.00	Poss HGA 1260.00			Sb, As, Be, cd, cr, cu, Pb, Hg, Ni, Se, Tl, Ag, Zn
2812	"	Calcusiew (NOD)	/ 1	26 May 89	Dig-50.00 Std 1134.00	Poss HGA 210.00			Sb, As, Be, cd, cr, Cu, Pb, Hg, Ni, Se, Tl, Ag, Zn, Cr, Fe, Pb, Bi, C
2813-2814	CQEWK383A1E6100	Tensas Pump Plant (VXD)	16 / 2	1 June 89	Dig-100.00 358.00 Std	Poss HGA 70.00			Ca, Fe, Mg, Si, Cl, Hardness, PH, Alkalinity
2815-2832	RD9G107E1170001	APG (wade)	/ 18	2 June 89	5400.00				PCB's
2833-2878	CQERA3831AES100	9th Ave Pet Study (zappi)	48 / 16	2 June 89	624.00				Na, Ca, Mg
2879-2863	CQERA3831AES100	9th Ave Pet Study (zappi)	15 / 15	2 June 89	300.00				Cl
2864-2878	CQERA3831AES100	9th Ave Pet Study (ZAPPI)	15 / 15	2 June 89	300.00				TOC
2879	RD8G107E1170001	APG-Edgewood (R. wade)	/ 1	5 June 89	300.00				PCB

ENVIRONMENTAL LABORATORY

DATA REPORTING SHEET ANALYTICAL LABORATORY GROUP

SHEET ____ OF ____

PROJECT *		DATE RECEIVED *	SAMPLE LOCATION: FREEZER NO.
DATA CHECKED BY	JOB NO. *	DATE COMPLETED	SHELF NO.

CHEMICAL PRESERVATIVE *	PARAMETER *	*												
LAB I.D. NO	PROJECT I.D. NO *													

FY 124

G-10

doors if he is away from the area where analyses are in progress.

The sample management officer then enters the information into the ALG computer data management system. Job files (example attached) are created for use by the analysts in recording their data.

SAMPLE DISPOSAL PROCEDURES

Samples are normally maintained by the ALG for a period of 6 months. At that time they are returned to the project managers if feasible. If this is not practical, the ALG requests permission from the project manager to dispose of the samples or place them in a semi-permanent repository. Samples that have been determined to contain no hazardous materials are disposed of via the sewerage system or sent to a sanitary landfill. Samples classified as hazardous are submitted to the WES Safety Office for disposal.

INSTRUMENT MAINTENANCE PROCEDURES

All Perkin-Elmer instruments (atomic absorption units) at WES are maintained by service contract that provides for twice yearly preventive maintenance and emergency repair. Permanent records are maintained of service visits.

The Plasma Emission Spectrometer (Spectrametrix) is maintained by service contract that provides for twice yearly preventive maintenance and emergency service. Permanent records are maintained of service visits.

All Hewlett-Packard Instruments (GC and GC/MS systems) are maintained by service contract that provides for twice yearly preventive maintenance and emergency repair. In addition, the GC/MS systems are tied via modem to the Analytical Response Center Support which can duplicate software problems at HP's service center. Records of all service calls are maintained in

permanent files.

All analytical balances are serviced annually by a certified balance technician.

All other instrumentation is serviced on an as needed basis and records are maintained of any repair calls.

Daily or routine maintenance of instruments is performed by the individual analysts and recorded in the instrument logs (i.e. Richard Karn is responsible for the GC/MS systems, Newberry Brown maintains the GCs, Mike Warren maintains the AAs, Don Brown maintains the ICP, DCP, and autoanalyzers, Jeffretha Christian maintains the TOC analyzer and the mercury analyzer.)

CALIBRATION PROCEDURES

Calibration of the GC/MS Systems. One instrument tune is met, the GC/MS system is calibrated before any samples or blanks are analyzed. Initial calibration is accomplished through the analysis of a minimum of five concentrations of standards. Five concentrations are used to confirm the linearity of response of the compounds examined. System calibration is verified at the start of every 12 hour analytical period. Relative response factors (RRF) are calculated for each compound based on the concentrations and areas of the characteristic ions for the compound to be measured and its assigned internal standard. Percent Relative standard (RSD) deviations are then calculated for each compound based on the mean of the initial relative response factors of the five standard concentrations. The percent RSD of the calibration check compounds listed in tables 1 and 2 are used to check calibration. The maximum

acceptable percent RSD for these compounds is 30.0.

Table 1

Volatile Calibration Check Compounds

Vinyl Chloride

1,1-Dichloroethene

Chloroform

1,2-Dichloropropane

Toluene

Ethylbenzene

Table 2

Semivolatile Calibration Check Compounds

Acenaphthene	4-Chloro-3-Methylphenol
1,4-Dichlorobenzene	2,4-Dichlorophenol
Hexachlorobutadiene	2-Nitrophenol
N-Nitroso-di-n-phenylamine	Pentachlorophenol
Di-n-octylphthalate	2,4,6-Trichlorophenol
Fluoranthene	Phenol
Benzo(a)pyrene	

In addition, system performance check compounds (SPCC) are injected to ensure that minimum RRFs are achieved. The compounds used are listed in tables 3 and 4 along with their minimum acceptable RRFs.

Table 3

Volatile System Performance Check compounds

Compound	Minimum Acceptable RRF
Chloromethane	0.300
1,1-Dichloroethane	0.30
1,1,2,2-Tetrachloroethane	0.30
Bromoform	0.25
Chlorobenzene	0.30

Table 4

Semivolatile System Performance Check Compounds

Compound	Minimum Acceptable RRF
N-Nitroso-Di-n-propylamine	0.050
Hexachlorocyclopentadiene	0.050
2,4-Dinitrophenol	0.050
4-Nitrophenol	0.050

Once the percent RSD for the CCCs and the minimum RRF for the SPCCs are met, the calibration is valid and sample analysis can begin.

Gas chromatograph calibration. A calibration Curve is determined for each of the compounds to be analyzed. Determination of the calibration curve involves preparing standards (usually three to five) from EPA standards. The samples are analyzed under normal conditions and the area under the peak is determined through integration. To determine the calibration factor, the area under the curve is divided by a standard amount (sample weight):

$$\text{Calibration factor} = \frac{\text{Area under the curve}}{\text{sample weight}}$$

To determine the variation between the Calibration Factors, a Percent Relative Deviation is calculated. The percent RSD is calculated by dividing the standard deviation of the Calibration factor by the mean of the calibration factors:

$$\%RSD = \frac{\text{Standard Deviation}}{\text{Mean}}$$

If the variation is less than 10 percent, the calibration is considered linear for all the samples analyzed for that particular compound.

Metals Analyses. Standard curves derived from data consisting of one reagent blank and three or four concentrations shall be prepared for each analyte. The response for each prepared standard shall be based upon the average of three replicate readings of each standard. the standard curve shall be used with each subsequent analysis provided that the standard curve is verified by using at least one reagent blank and one standard at a level normally encountered or expected in such samples. If the results of the verification are not within ±10% of the original curve, a reference standard should be employed to determine if the discrepancy is with the standard or the instrument. New standards should be prepared quarterly at a minimum.

Balances. Balances are checked daily using weights traceable to class S weights. Once each month the balances are checked with the Class S weights. Acceptance for balances which are direct reading to 0.01 gram shall be ±0.01 g for 0 to 100 g and ±0.1 percent of the applied weight over 100 g. A certified balance technician checks the balances annually.

DETECTION LIMITS. Procedures described in the CLP documents are used to determine ability to meet contract required detection limits (i.e. for metals, standards are run at 3 to 5 times instrument detection limits taking seven consecutive measurements on three non-consecutive days; the standard deviation is determined each day and three times the average standard deviation is used as the actual instrument detection limit.) For organic analyses, the method detection limits for the method are used, keeping in mind that the analyses are highly matrix dependent and higher detection limits are reported when interferences prohibit the reporting of the specified limits.

REFERENCE STANDARDS

The WES uses a number of sources for reference standards, including NIST (NBS) and EPA. Other Commercial sources are specified as being traceable to NIST if at all possible.

Reference Standards-Metals

NIST	SPECTROMETRIC Solutions
3104	Barium
3105	Beryllium
3107	Boron
3108	Cadmium
3112	Chromium
3113	Cobalt
3114	Copper
3128	Lead
3131	Magnesium

4-8907 Supelpreme-HC Hazardous Substances Mix 1

4-8851 Purgeables A

4-8852 Purgeables B

4-8853 Purgeables C

A List of EPA Standards ordered from the repository at Research Triangl Park is attached.

Chlorinated Biphenyl Standards were purchased from the National Research Council of Canada for congener analysis.

STANDARD REFERENCE MATERIALS AND CHECK SAMPLES FOR QUALITY CONTROL

The following SRMS from NIST are in the laboratory:

1642b Mercury in water

1643b Trace elements in water

1645 Trace elements in river sediment

1646 Trace elements in estuarine sediment

1566 Oyster tissue

1567 Bovine Liver

1573 Tomato leaves

Quality Control samples from Environmental Resource Associates are received on a quarterly basis for waste water, potable water, priority pollutants, and pesticides.

Additional quality control samples from EPA and NRC of Canada are ordered as needed to supplement samples listed above.

DATA EVALUATION

All data is checked by the analyst, the inorganic team leader or the organic team leader, and the Chief, ALG before it

is submitted to the customer. The following items are checked:

1. Completeness
2. Duplicate values for precision
3. Recovery of Spikes for accuracy
4. Method blanks for contamination
5. Surrogate recoveries for organic analysis
6. Data for QA check samples (EPA, ERA or NBS SRMs)
7. Reasonableness and trends

If data falls outside acceptable limits as described in the procedures, samples are rerun if sample is available. If data falls outside acceptable limits on the reruns and QA check sample data is good, then data may be reported with qualifying explanations. Acceptable data is usually defined by the procedures (i.e. SW-846, CLP, 600 methods, 500 methods).

CONTROL CHARTS

All inorganic parameters routinely analyzed are charted. A minimum of 20 points is required for limit calculations. Precision control charts are prepared from the duplicate analysis data and accuracy charts are prepared from matrix spikes. Future charts will also be prepared utilizing blank spike data. Charts are also prepared using SRMs and external QA samples. Control charts for organics are limited to the CLP spiked compounds and surrogates. PCB-1248 is the spiking compound for PCB analysis.

CORRECTIVE ACTIONS

During the performance of work under any laboratory task, out of control conditions may occur which call for corrective action.

Typically QC parameters given in the various methods are employed to determine the need for action. The type of action required shall be documented, although documentation may only require appropriate instrument and/or laboratory logbook entries, as opposed to a formal corrective action memo.

Corrective actions may also include procedural matters related to internal custody of samples, sample log-in, sample data processing and so forth. These are usually provided via inhouse memo from the Chief, ALG.

As necessary modifications to inhouse procedures, equipment, standards, policy and so forth may be needed to rectify recurring or otherwise significant laboratory problems. These are usually resolved via group meetings where a course of action is decided upon and a time for correction is defined.

When significant changes are made the QA manual will be updated to reflect the changes.

Use of a form to document corrections will be implemented October 1989.

GC/MS TUNING

GC/MS tuning is performed using Hewlett-Packard recommended procedures for the quadrapole systems and is included in the instrument manuals (copy attached).

DATA REDUCTION.

Data reduction is shown in the following flow chart. It is the responsibility of the analyst to conduct initial data reduction. The readings from the instruments or analytical system are calculated into

DFTPP TUNING

REFERENCES:

E-16	
D-98	regulations detailed
E-11	spectrum
D-102	2.6.1.2 - Demonstrates consistant spectra from MS to MS. Spells out requirements for qualitative verification that must be met.

NOTES:

A) DFTPP must be verified once per shift or every 12 hrs.

B) Note that all MS give different looking DFTPP spectra, which implies a wide range of PFTBA spectra.

```
 69 = 100 --|
219 =  55   |-- fairly normal
502 = 1.2 --|

 69 = 100 --|
219 =  20   |-- perfectly ok, often
502 = 0.2 --|   seen on benchtops
```

C) There are many different ways to tune DFTPP. The methods given below (some specific, some general) are ways that many users have found successful. In addition, there are many "markers" that different users look for during the tune that seem to indicate that the tune will be successful. Some of the more popular of these goals are:

1) Tune until 219 and 131 are approximately equal and range between 20 and 60% of 69.
2) After tuning, check spectrum scan and see if m/e 50 and m/e 502 are equal. The closer to equal, the better the chance that the tune will be successful.

Look for guidelines such as these on your MS to help guide you during tuning.

D) DO NOT TUNE UNLESS IT IS NECESSARY! It will cost you only 5 - 10 min to attempt to verify your last tune. Experience has shown that the more often you tune, the more often you have to recalibrate your ID file. This is because you are adjusting your mass response ratios when you tune.

PROCEDURE A: 5987/5988

MANUAL TUNE - PFTBA OPEN

1) REPEAT PROFILE - set plunger to max 219
2) Set GC temp to 225-275 (ie. elution temp of DFTPP) so GC flow = flow at DFTPP elution.
3) Run AUTOTUNE - set source to 250
4) MANUAL TUNE (source @ 250, GC - 250)
5) set A/D =1 (0.5 sec/scan or faster)
6) run REPEAT PROFILE about 1 min to warm up and stabilize the source and EM.
7) PARAMETER RAMP (make sure plunger is adjusted) Begin to max 219, starting with REP
   A) REP
   B) IF
   C) DO
   D) ENT LENS

   leave the X-RAY alone at this point.
8) in REPEAT PROFILE use the X-RAY to set 69:219:502 ratio. 502/219 should be >3% and <5%. (do not be confused and set 502/69 ratio).
9) use DO to achieve final ratios, if needed.
10) do PEAK WIDTH and MASS AXIS CALIBRATION
11) check spectrum to make sure calibrations did not shift peak ratios.
12) store tune as MTDFTP

NOTES:

A) If 502 has a precursor, you will probably lose m/e 441 in DFTPP spectra. This is more of a problem on bench-tops than big systems. Cleaning the ENT LENS will often eliminate this precursor.

PROCEDURE B: 5995

A) Set oven to 250 with XFR,OVN1,250 (ie. elution temp of DFTPP, so GC flow = flow at DFTPP elution)
B) Set source to 250 with XFR,SORS,250
C) Run AUTOTUNE
D) MANUAL TUNE - PFTBA OPEN
Note: If you have previously created a manual tune file, use NEW TUNE FILE to load it.

1) Edit temp zones
   Source 250
   Analyser 180
   Transfer 280
2) Edit scan parameters to set A/D =1 (0.5 sec/scan or faster)
3) run REPEAT PROFILE about 1 min to warm up and stabalize source and EM.
4) PARAMETER RAMP - begin to max 219
   A) REP leave alone
   B) IF most useful lens
   C) ENT LENS can be useful
   leave the X-RAY alone at this point.
   NOTE: on benchtops, if we set IF = 100, this is often all that is necessary. As a first attempt just adjust the IF and leave other lenses alone.
5) in REPEAT PROFILE, use X-RAY to set 69:219:502 ratio. 502/219 ratio should be >3% and <5% (do not be confused and set 502/69 ratio). Adjust ratio using X-RAY, being careful not to adjust too far and deteriorate peak shape.
6) do PEAK WIDTH and MASS AXIS CALIBRATION
7) SPECTRUM SCAN - check spectrum to make sure calibrations did not shift peak ratios. Remember, 502/219 should be >3% and <5%. Also, look at 131/219 ratio. They should be approximately equal.
8) Store tune as MTDFTP

NOTES:

A) If 502 has a precursor, you will probably lose m/e 441 in DFTPP spectra. This is more of a problem on benchtops than big systems. Cleaning the ENT LENS will often eliminate this precursor.

DATA REDUCTION
ANALYSIS FLOW CHART

LABORATORY DATA MANAGEMENT SYSTEM
(Bench Sheets)

↓

ANALYSIS OF SAMPLES

↓

ANALYST'S NOTEBOOK

↓

RAW DATA TO BENCH SHEETS

↓

TEAM LEADER

↓

LABORATORY DATA MANAGEMENT SYSTEM ⇄ QC CHECK

↓

CHIEF, ANALYTICAL LABORATORY GROUP

↓

LABORATORY DATA MANAGEMENT SYSTEM

↓

FINAL REPORT
(Initialed by C/ALG)

appropriate concentration units for the results. Rounding occurs only after calculations are complete. The calculations are normally performed on the raw data sheets. The results are then transcribed on to the computer generated data files.

The next step in data reduction is data review by the team leader. Data is checked for validity and completeness. Questionable data is brought to the attention of the analyst and corrective action is taken if necessary.

Data is then forwarded to the sample management officer for entry into the Laboratory Data Management system.. Data entry is checked by the team leader, corrections are made, and the report is then sent to the quality assurance officer and the Chief, Analytical Lab Group for review. Any corrections are made and final report is generated that has been initialed by the Chief, ALG. All raw data is filed.

DATA OUTLIERS

Sample data that falls outside acceptable limits are reanalyzed if possible. If sample is not available to rerun the sample, data are reported with qualifying statements and with external QA data to support the results, assuring that the analytical system was in control. Method blanks are analyzed with each set of samples and reported with the sample data. Organic method blanks are spiked with surrogates.

AGENCY APPROVALS

As the primary research and development facility for Corps environmental research, the ALG has not solicited formal approval from other agencies or states, although the ALG has conducted numerous research projects for the Environmental Protection Agency, the Navy,

the Coast Guard, the Air Force, and other Army branches. The ALG is a validated Quality Assurance Laboratory for the Corps Superfund an DERP projects.

INTERNAL AUDITS

Several methods of internal audits are used including worksheet review, on-site analyst review, intra- and interlaboratory sample examination. Presently the ALG participates in the Corps of Engineers Interlaboratory Testing Program and subscribes quarterly to the Environmental Research Associates Quality Control Sample program (beginning October 1989, subscription will be bimonthly). In addition the QA officer submits EPA, NRC or NIST quality assurance samples to the laboratory for internal review of the measurement process. System audits are conducted semi-annually to evaluate sample handling, sample analysis,record control, proficiency testing, personal practices, training, workload, and manpower needs.

DOCUMENT FLOW

The sample management officer is also the in charge of document control. She maintains the master logbook, the computer logbook, the computer-generated bench sheets, the completed computer generated bench sheets and the final computer generated reports. Each analyst maintains the raw data files from his/her instruments. The document flow is outlined in the Data Reduction Analysis Flow Chart. Final Data reports are approved by the team leader, the quality assurance officer and the Chief, ALG.

QA REPORTS

QA reports are tailored to customer request. QA reports for

DERP projects where WES ALG serves as the QA lab utilize the following outline.

A. Cover letter

B. Report Narrative

1. Summary
2. QC data discussion
3. QA/QC data comparison
4. Other Problems
5. Corrective Actions

c. Data comparison tables

Table 2 Analytical Procedures for Metals

Parameter	Media	Ref 1 EPA-1979	Ref 2 SW-846	Other	Routine Meth Det. limits
1. Digest for tot rec met	Water		3005		
2. Digest for tot metals	Water		3010		
3. Digest for Metals-GFAA	Water		3020		
4. Digest for Metals	Sed., Soil & Sludge		3050		
5. Simultaneous anal by DCP				Ref 7, D4190-82	
5a. Simultaneous anal by ICP		200.7	6010		
6. Aluminum, DCP				Ibid	30ug/l
ICP		200.7	6010		100ug/l
7. Antimony, DCP				Ibid	
ICP		200.7	6010		
8. Antimony, GFAA		204.2	7041		5ug/l
9. Arsenic,GFAA		206.2	7060		5ug/l
10. Arsenic,hydride		206.3	7061		5ug/l
11. Barium,AA		208.1	7080		100ug/l
12. Barium,GFAA		208.2			2ug/l
13. Barium, DCP				Ref 7,	10ug/l
ICP		200.7	6010	D4190-82	5ug/l
14. Beryllium, DCP				Ibid	5ug/L
ICP		200.7	6010		5ug/L
15. Boron, DCP				Ibid	10ug/l
ICP		200.7	6010		
16. Cadmium, DCP				Ibid	20ug/L
ICP		200.7	6010		20ug/l
17. Cadmium, GFAA		213.2	7131		0.1ug/l

18. Calcium, DCP				Ibid	100ug/l
ICP		200.7	6010		200ug/l
19 Calcium, AA		215.1	7140		
20. Chromium, DCP				Ibid	20ug/l
ICP		200.7	6010		20ug/l
21. Chromium, GFAA		218.2	7191		1ug/l
22. Chromium VI		218.4	7197		10ug/l
23. Cobalt, DCP				Ibid	30ug/l
ICP		200.7	6010		50ug/l
24. Cobalt, GFAA		219.2	7201		1ug/l
25. Copper, DCP				Ibid	30ug/l
ICP		200.7	6010		20ug/l
26. Copper, GFAA		220.2			1ug/l
27. Iron, DCP				Ibid	30ug/l
ICP		200.7	6010		30ug/l
28. Iron,AA		236.1	7380		30ug/l
29. Iron,GFAA		236.2	7381		1ug/l
30. Lead, DCP				Ibid	200ug/l
ICP		200.7	6010		100ug/l
31. Lead, GFAA		239.2	7421		1ug/l
32. Magnesium, DCP				Ibid	30ug/l
ICP		200.7	6010		30ug/l
33. Magnesium, AA		242.1	7450		
34. Manganese, DCP				Ibid	30ug/l
ICP		200.7	6010		10ug/l
35. Manganese, AA		243.1	7460		
36. Manganese, GFAA		243.2			1ug/l
37. Mercury, Cold	Water	245.1	7470		0.2ug/l
Vapor	Sed.	245.5	7471		0.2ug/g
38. Molydenum, DCP				Ibid	50ug/l
ICP		200.7	6010		30ug/l
39. Molydenum, GFAA		246.2	7481		1ug/l

40. Nickel, DCP			Ibid	30ug/l
ICP	200.7	6010		20ug/l
41. Nickel,GFAA	249.2			1ug/l
42. Potassium, DCP			Ibid	100ug/l
ICP	200.7	6010		
43. Potassium, AA	258.1	7610		10ug/l
44. Selenium, GFAA	270.2	7740		5ug/l
45. Selenium,Hydride	270.3	7741		5ug/l
46. Silver, DCP			Ibid	30ug/l
ICP	200.7	6010		20ug/l
47. Silver, GFAA	272.1	7761		1ug/l
48. Sodium, DCP			Ibid	100ug/l
ICP	200.7	6010		100ug/l
49. Sodium, AA	273.1	7770		5ug/l
50. Thallium, DCP			Ibid	30ug/l
ICP	200.7	6010		30ug/l
51. Thallium, GFAA	279.2	7841		1ug/l
52. Tin, DCP			Ibid	50ug/l
53. Tin, GFAA	282.2			5ug/l
54. Titanium, GFAA	283.2			10ug/l
55. Vanadium, DCP			Ibid	20ug/l
ICP	200.7	6010		20ug/l
56. Vanadium,GFAA	286.2	7911		5ug/l
57. Zinc, DCP			Ibid	30ug/l
ICP	200.7	6010		10ug/l
58. Zinc, GFAA	289.2			5ug/l
59. Silicon, DCP			Ibid	100ug/l

Table 3. Organic Procedures

Parameter	Media	Reference		
		Ref 4 Fed Reg 1984	Ref 2 SW-846	Ref 6 Std Meth
1. Soxhlet Extraction	Soil & Sed.		3540	
2. Sep funnel Liq-Liq extr	Water Soluble		3510	
3. Purge & trap Prep-GC			5030	
4. Sonication Extraction	Soil, Tissue & Sed.		3550	
5. Florisil Cleanup	Pest, PCB, & ClHC		3620	
6. Silica Gel Cleanup	PAH		3630	
7. Sulfur Cleanup	Sed.		3660	
8. Volatile Organics	Water	624		
	Water & Solid Ext.		8260	
9. Semivol. Organics(BNA)	Water	625		
	Water & Solid Ext.		8270	
10. Cl-Pest & PCBs	Water	608		
	Water & Solid Ext.		8080	
11. Polynuclear Aromatic HC	Water	610		
	Water & Solid Ext		9100	
12. Organophos Pesticides	Water & Solid ext.		8140	509A
13. Chlorinated Herbicides	Water & Solid Ext.		8150	509B

Other Methods as Requested Such as Hydrazine, Nitrosoamines, & TNT

Detection limits for organic analysis are typically those given for the methods. They are, however, subject to matrix interferences and may be higher depending on the nature of the interference.

TABLE 2.
PRACTICAL QUATITATION LIMITS (PQL) FOR VOLATILE ORGANICS[a]

Volatiles	Practical Quantitation Limits[b] Ground water ug/L	Low Soil/Sediment ug/kg
Acetone	100	100
Acetonitrile	100	100
Allyl chloride	5	5
Benzene	5	5
Benzyl chloride	100	100
Bromodichloromethane	5	5
Bromoform	5	5
Bromomethane	10	10
2-Butanone	100	100
Carbon disulfide	100	100
Carbon tetrachloride	5	5
Chlorobenzene	5	5
Chlorodibromomethane	5	5
Chloroethane	10	10
2-Chloroethyl vinyl ether	10	10
Chloroform	5	5
Chloromethane	10	10
Chloroprene	5	5
1,2-Dibromo-3-chloropropane	100	100
1,2-Dibromoethane	5	5
Dibromomethane	5	5
1,4-Dichloro-2-butene	100	100
Dichlorodifluoromethane	5	5
1,1-Dichloroethane	5	5
1,2-Dichloroethane	5	5
1,1 Dichloroethene	5	5
trans-1,2-Dichloroethene	5	5
1,2-Dichloropropane	5	5
cis-1,3-Dichloropropene	5	5
trans-1,3-Dichloropropene	5	5
Ethylbenzene	5	5
Ethyl methacrylate	5	5
2-Hexanone	50	50
Isobutyl alcohol	100	100
Methacrylonitrile	100	100
Methylene chloride	5	5
Methyl iodide	5	5
Methyl methacrylate	5	50
4-Methyl-2-pentanone	50	50
Pentachloroethane	10	10

TABLE 2.
(Continued)

Volatiles	Practical Quantitation Limits[b] Ground water ug/L	Low Soil/Sediment ug/kg
Propionitrile	100	100
Styrene	5	5
1,1,1,2-Tetrachloroethane	5	5
1,1,2,2-Tetrachloroethane	5	5
Tetrachloroethene	5	5
Toluene	5	5
1,1,1-Trichloroethane	5	5
1,1,2-Trichloroethane	5	5
Trichloroethene	5	5
1,2,3-Trichloropropane	5	5
Vinyl acetate	50	50
Vinyl chloride	10	10
Xylene (Total)	5	5

[a]Sample PQLs are highly matrix-dependent. The PQLs listed herein are provided for guidance and may not always be achieveable. See the following information for further guidance on matrix-dependent PQLs.

[b]PQLs listed for soil/sediment are based on wet weight. Normally data is reported on a dry weight basis; therefore, PQLs will be higher, based on the percent moisture in each sample.

Other Matrices:	Factor[1]
Water miscible liquid waste	50
High-level soil & sludges	125
Non-water miscible waste	500

[1]PQL = [PQL for ground water (Table 2)] X [Factor]. For non-aqueous samples, the factor is on a wet-weight basis.

TABLE 2.
PRACTICAL QUANTITATION LIMITS (PQL) FOR SEMIVOLATILE ORGANICS[A]

Semivolatiles	Practical Quantitation Limits[b] Ground Water ug/L	Low Soil/Sediment[1] ug/kg
Acenapthene	10	660
Acenaphthylene	10	660
Acetophenone	10	ND
2-Acetylaminofluorene	20	ND
1-Acetyl-2-thiourea	1000	ND
2-Aminoanthraquinone	20	ND
Aminoazobenzene	10	ND
4-Aminobiphenyl	20	ND
Anilazine	100	ND
o-Anisidine	10	ND
Anthracene	10	660
Aramite	20	ND
Azinphos-methyl	100	ND
Barban	200	ND
Benz(a)anthracene	10	660
Benzo(b)fluoranthene	10	660
Benzo(k)fluoranthene	10	660
Benzoic acid	50	3300
Benzo(g,h,i)perylene	10	660
Benzo(a)pyrene	10	660
p-Benzoquinone	10	ND
Benzyl alcohol	20	1300
Bis(2-chloroethoxy) methane	10	660
Bis(2-chloroethyl) ether	10	660
Bis(2-chloroisopropyl) ether	10	660
4-bromophenyl phenyl ether	10	660
Bromoxynil	10	ND
Butyl benzyl phthalate	10	660
Captafol	20	ND
Captan	50	ND
Carbaryl	10	ND
Carbofuran	10	ND
Carbophenothion	10	ND
Chlorfenvinphos	20	ND
4-Chloroaniline	20	1300
Chlorobenzilate	10	ND
5-Chloro-2-methylaniline	10	ND
4-Chloro-3-methylphenol	20	1300
3-(Chloromethyl) pyridine hydrochloride	100	ND
2-Chloroanaphthalene	10	660
2-Chlorophenol	10	660
4-Chlorophenyl phenyl ether	10	660

TABLE 2.
(Continued)

Semivolatiles	Practical Quantitation Limits[b] Ground Water ug/L	Low Soil/Sediment[1] ug/kg
Chrysene	10	660
Coumaphos	40	ND
p-Cresidine	10	ND
Crotoxyphos	20	ND
2-Cyclohexyl-4,6-dinitrophenol	100	ND
Demeton-o	10	ND
Demeton-s	10	ND
Diallate (cis or trans)	10	ND
Diallate (trans or cis)	10	ND
2,4-Diaminotoluene	20	ND
Dibenz(a,j)acridine	10	ND
Dibenz(a,h)anthracene	10	660
Dibenzofuran	10	660
Dibenzo(a,e)pyrene	10	ND
Di-n-butylphthalate	10	ND
Dichlone	NA	ND
1,2-Dichlorobenzene	10	660
1,3-Dichlorobenzene	10	660
1,4-Dichlorobenzene	10	660
3,3'-Dichlorobenzidine	20	1300
2,4-Dichlorophenol	10	660
2,6-Dichlorophenol	10	ND
Dichlorovos	10	ND
Dicrotophos	10	ND
Diethylphthalate	10	660
Diethylstilbesterol	20	ND
Diethyl sulfate	100	ND
Dimethoate	20	ND
3,3'-Dimethoxybenzidine	100	ND
Dimethylaminoazobenzene	10	ND
7,12-Dimethylbenz(a)anthracene	10	ND
3,3'-Dimethylbenzidine	10	ND
a,a-Dimethylphenethylamine	ND	ND
2,4-Dimethylphenol	10	660
Dimethyl phthalate	10	660
1,2-Dinitrobenzene	40	ND
1,3-Dinitrobenzene	20	ND
1,4-Dinitrobenzene	40	ND
4,6-Dinitro-2-methylphenol	50	3300
2,4-Dinitrophenol	50	3300
2,4-Dinitrotoluene	10	660
2,6-Dinitrotoluene	10	660
Dinocap	100	ND

TABLE 2.
(Continued)

Semivolatiles	Practical Quantitation Limits[b] Ground Water ug/L	Low Soil/Sediment[1] ug/kg
Dinoseb	20	ND
5,5-Diphenylhydantoin	20	ND
Di-n-octyl phthalate	10	660
Disulfoton	10	ND
EPN	10	ND
Ethion	10	ND
Ethyl carbamate	50	ND
Bis(2-ethylhexyl)phthalate	10	660
Ethyl methanesulfonate	20	ND
Famphur	20	ND
Fensulfothion	40	ND
Fenthion	10	ND
Fluchloralin	20	ND
Fluoranthene	10	660
Fluorene	10	660
Hexachlorobenzene	10	660
Hexachlorobutadiene	10	660
Hexachlorocyclopentadiene	10	660
Hexachloroethane	10	660
Hexachlorophene	50	ND
Hexachloropropene	10	ND
Hexamethyl phosphoramide	20	ND
Hydroquinone	ND	ND
Indeno(1,2,3-cd)pyrene	10	660
Isodrin	20	ND
Isophorone	10	660
Isosafrole	10	ND
Kepone	20	ND
Leptophos	10	ND
Malathion	50	ND
Maleic anhydride	NA	ND
Mestranol	20	ND
Methapyrilene	100	ND
Methoxychlor	10	ND
3-Methylcholanthrene	10	ND
4,4'-Methylenebis(2-chloroaniline)	NA	ND
Methylmethanesulfonate	10	ND
2-Methylnaphthalene	10	660
Methyl parathion	10	ND
2-Methylphenol	10	660
3-Methylphenol	10	ND
4-Methylphenol	10	660
Mevinphos	10	ND

TABLE 2.
(Continued)

Semivolatiles	Practical Quantitation Limits[b] Ground Water ug/L	Low Soil/Sediment[1] ug/kg
Mexacarbate	20	ND
Mirex	10	ND
Monocrotophos	40	ND
Naled	20	ND
Naphthalene	10	660
1,4-Naphthoquinone	10	ND
1-Naphthylamine	10	ND
2-Naphthylamine	10	ND
Nicotine	20	ND
5-Nitroacenaphthene	10	ND
2-Nitroaniline	50	3300
3-Nitroaniline	50	3300
4-Nitroaniline	20	ND
5-Nitro-o-anisidine	10	ND
Nitrobenzene	10	660
4-Nitrobiphenyl	10	ND
Nitrofen	20	ND
2-Nitrophenol	10	660
4-Nitrophenol	50	3300
5-Nitro-o-toluidine	10	ND
4-Nitroquinoline-1-oxide	40	ND
N-Nitrosodibutylamine	10	ND
N-Nitrosodiethylamine	20	ND
N-Nitrosodiphenylamine	10	660
N-Nitroso-di-n-propylamine	10	660
N-Nitrosopiperidine	20	ND
N-Nitrosopyrrolidine	40	ND
Octamethyl pyrophosphoramide	200	ND
4,4'-Oxydianiline	20	ND
Parathion	10	ND
Pentachlorobenzene	10	ND
Pentachloronitrobenzene	20	ND
Pentachlorophenol	50	3300
Phenacetin	20	ND
Phenanthrene	10	660
Phenobarbital	10	ND
Phenol	10	660
1,4-Phenylenediamine	10	ND
Phorate	10	ND
Phosalone	100	ND
Phosmet	40	ND
Phosphamidon	100	ND
Phthalic anhydride	100	ND
2-Picoline	ND	ND

TABLE 2.
(Continued)

Semivolatiles	Practical Quantitation Limits[b] Ground Water ug/L	Low Soil/Sediment[1] ug/kg
Piperonyl sulfoxide	100	ND
Pronamide	10	ND
Propylthiouracil	100	ND
Pyrene	10	660
Pyridine	ND	ND
Resorcinol	100	ND
Safrole	10	ND
Strychnine	40	ND
Sulfallate	10	ND
Terbufos	20	ND
1,2,4,5-Tetrachlorobenzene	10	ND
2,3,4,6-Tetrachlorophenol	10	ND
Tetrachlorvinphos	20	ND
Tetraethyl pyrophosphate	40	ND
Thionazine	20	ND
Thiophenol (Benzenethiol)	20	ND
Toluene diisocyanate	100	ND
o-Toluidine	10	ND
1,2,4-Trichlorobenzene	10	660
2,4,5-Trichlorophenol	10	660
2,4,6-Trichlorophenol	10	660
Trifluralin	10	ND
2,4,5-Trimethylaniline	10	ND
Trimethyl phosphate	10	ND
1,3,5-Trinitrobenzene	10	ND
Tris(2,3-dibromopropyl) phosphate	200	ND
Tri-p-tolyl phosphate(h)	10	ND
0,0,0-Triethylphosphorothioate	NT	ND

[a] PQLs listed for soil/sediment are based on wet weight. Normally data is reported on a dry weight basis, therefore, PQLs will be higher based on the % moisture in each sample. This is based on a 30-g sample and gel permeation chromatography cleanup.
[b] Sample PQLs are highly matrix-dependent. The PQLs listed herein are provided for guidance and may not always be achievable.
ND = Not determined.
NA = Not applicable.
NT = Not tested.

Other Matrices	Factor[1]
Medium-level soil and sludges by sonicator	7.5
Non-water miscible waste	75

[1]PQL = [PQL for Low Soil/Sediment (Table 2)] X [Factor].

APPENDIX D

ORR GROUNDWATER ANALYTICAL RESULTS

FAST LIST REPORT FOR A DATE RANGE
SITE : 06 DEM AREA/OLD RIFLE RANGE
DATE RANGE FROM: 11/16/81 TO: 06/15/86

WELLNUMBER	PARAMETER NAME	UNITS	DATESAMPLE		AMOUNT DETECTED
06-13	ORGANIC CHLORINE	mg/L	02/07/84		0.04000
06-13	ORGANIC BROMINE	mg/L	02/07/84		0.00800
06-13	ORGANIC IODINE	mg/L	02/07/84		0.03800
06-13	ORGANIC CARBON, TOTAL	mg/L	02/07/84		12.00000
06-14	pH, Field	S.U.	08/02/83		6.20000
					6.10000
					6.20000
					6.20000
06-14	SPECIFIC CONDUCTANCE	umho/cm	09/20/82		535.00000
					530.00000
					535.00000
					530.00000
06-14	SPECIFIC CONDUCTANCE	umho/cm	08/02/83		450.00000
					440.00000
					440.00000
					440.00000
06-14	TOTAL ORGANIC HALOGENS	mg/L	09/20/82		0.02100
					0.05400
					0.05000
					0.05100
06-14	TOTAL ORGANIC HALOGENS	mg/L	08/02/83	ND	0.01000
				ND	0.01000
				ND	0.01000
				ND	0.01000
06-14	SULFATE	mg/L	09/20/82		64.00000
06-14	CHLORIDE	mg/L	09/20/82		7.00000
06-14	RDX	mg/L	08/02/83	ND	0.10000
06-14	HMX	mg/L	08/02/83	ND	0.10000
06-14	FLUORIDE	mg/L	09/20/82		0.10000
06-14	NO2+NO3 AS N	mg/L	09/20/82		0.41000
06-14	ENDRIN	mg/L	09/20/82	ND	0.00004
06-14	LINDANE	mg/L	09/20/82	ND	0.00008
06-14	METHOXYCHLOR	mg/L	09/20/82	ND	0.00160
06-14	TOXAPHENE	mg/L	09/20/82	ND	0.00160
06-14	2,4-D	mg/L	09/20/82	ND	0.00380
06-14	RADIUM-226	pcu/L	06/28/82	ND	0.26000
06-14	GROSS ALPHA	pcu/L	11/16/81	ND	1.30000
06-14	GROSS ALPHA	pcu/L	03/01/82	ND	3.63000
06-14	GROSS ALPHA	pcu/L	06/28/82		6.30000
06-14	GROSS BETA	pcu/L	11/16/81		1.96000
06-14	GROSS BETA	pcu/L	03/01/82		2.08000
06-14	GROSS BETA	pcu/L	06/28/82		2.49000
06-14	SILVEX	mg/L	09/20/82	ND	0.00050
06-14	ORGANIC CARBON, TOTAL	mg/L	08/02/83		22.00000
					22.00000
					23.00000
					22.00000
06-14	2,4,6-TNT	mg/L	08/02/83	ND	0.10000
06-14	2,4-DINITROTOLUENE (DNT)	mg/L	08/02/83	ND	0.10000
06-14	2,6-DINITROTOLUENE (DNT)	mg/L	08/02/83	ND	0.10000
06-14	TETRYL	mg/L	08/02/83	ND	0.10000

FAST LIST REPORT FOR A DATE RANGE
SITE : 06 DEM AREA/OLD RIFLE RANGE
DATE RANGE FROM: 11/16/81 TO: 06/15/86

WELLNUMBER	PARAMETER NAME	UNITS	DATESAMPLE	AMOUNT DETECTED	
06-14A	pH, Field	S.U.	02/07/84		6.40000
06-14A	SPECIFIC CONDUCTANCE	umho/cm	02/07/84		370.00000
06-14A	IRON, TOTAL	mg/L	02/07/84		0.02000
06-14A	MANGANESE	mg/L	02/07/84		0.34000
06-14A	SODIUM	mg/L	02/07/84		7.40000
06-14A	SULFATE	mg/L	02/07/84		44.00000
06-14A	CHLORIDE	mg/L	02/07/84		9.00000
06-14A	PHENOLS	mg/L	02/07/84		0.03400
06-14A	TNT	mg/L	02/07/84	ND	0.01000
06-14A	TNT	mg/L	01/28/85	<	0.00500
06-14A	TNT	mg/L	02/02/86	ND	0.00500
06-14A	RDX	mg/L	01/28/85	<	0.01000
06-14A	RDX	mg/L	02/02/86	ND	0.01000
06-14A	RDX (BY HPLC)	mg/L	02/07/84	ND	0.01000
06-14A	HMX	mg/L	01/28/85	<	0.05000
06-14A	HMX (BY HPLC)	mg/L	02/07/84	ND	0.01000
06-14A	HMX (BY HPLC)	mg/L	02/02/86	ND	0.05000
06-14A	ARSENIC	mg/L	01/28/85	<	0.00400
06-14A	ARSENIC, TOTAL	mg/L	02/02/86	ND	0.00100
06-14A	BARIUM	mg/L	01/28/85		0.17000
06-14A	BARIUM, TOTAL	mg/L	02/02/86		0.55000
06-14A	CADMIUM	mg/L	01/28/85	<	0.00040
06-14A	CADMIUM, TOTAL	mg/L	02/02/86	<	0.01000
06-14A	CHROMIUM	mg/L	01/28/85	<	0.02000
06-14A	CHROMIUM, TOTAL	mg/L	02/02/86	<	0.02000
06-14A	LEAD	mg/L	01/28/85	<	0.00500
06-14A	LEAD, TOTAL	mg/L	02/02/86	<	0.03000
06-14A	MERCURY	mg/L	01/28/85		0.00040
06-14A	MERCURY	mg/L	02/02/86	ND	0.00020
06-14A	SELENIUM	mg/L	01/28/85	<	0.00400
06-14A	SELENIUM, TOTAL	mg/L	02/02/86	ND	0.00500
06-14A	SILVER	mg/L	01/28/85	<	0.01000
06-14A	SILVER, TOTAL	mg/L	02/02/86	ND	0.00500
06-14A	FLUORIDE, TOTAL	mg/L	02/02/86	<	0.10000
06-14A	ORGANIC CHLORINE	mg/L	02/07/84	ND	0.01000
06-14A	ORGANIC BROMINE	mg/L	02/07/84	ND	0.00200
06-14A	ORGANIC IODINE	mg/L	02/07/84		0.00300
06-14A	ORGANIC CARBON, TOTAL	mg/L	02/07/84		3.00000
06-15	TNT	mg/L	01/28/85	<	0.00500
06-15	RDX	mg/L	01/28/85	<	0.01000
06-15	HMX	mg/L	01/28/85	<	0.05000
06-15	ARSENIC	mg/L	01/28/85		0.00500
06-15	BARIUM	mg/L	01/28/85		0.10000
06-15	CADMIUM	mg/L	01/28/85		0.00040
06-15	CHROMIUM	mg/L	01/28/85	<	0.02000
06-15	LEAD	mg/L	01/28/85	<	0.00500
06-15	MERCURY	mg/L	01/28/85		0.00030
06-15	SELENIUM	mg/L	01/28/85	<	0.00400
06-15	SILVER	mg/L	01/28/85	<	0.01000
06-16	pH, Field	S.U.	09/20/82		6.90000
					6.90000
					6.90000
					6.80000

FAST LIST REPORT FOR A DATE RANGE
SITE : 06 DEM AREA/OLD RIFLE RANGE
DATE RANGE FROM: 11/16/81 TO: 06/15/86

WELLNUMBER	PARAMETER NAME	UNITS	DATESAMPLE	AMOUNT DETECTED	
06-16	pH, Field	S.U.	03/01/83		6.70000
					6.80000
					6.80000
					6.80000
06-16	pH, Field	S.U.	08/02/83		6.80000
					6.80000
					6.80000
					6.80000
06-16	SPECIFIC CONDUCTANCE	umho/cm	09/20/82		380.00000
					380.00000
					380.00000
					380.00000
06-16	SPECIFIC CONDUCTANCE	umho/cm	03/01/83		380.00000
					380.00000
					380.00000
					378.00000
06-16	SPECIFIC CONDUCTANCE	umho/cm	08/02/83		470.00000
					460.00000
					470.00000
					470.00000
06-16	TOTAL ORGANIC HALOGENS	mg/L	09/20/82	ND	0.01000
				ND	0.01000
					0.02100
					0.05000
06-16	TOTAL ORGANIC HALOGENS	mg/L	03/01/83		0.04900
					0.03800
					0.01700
					0.04000
06-16	TOTAL ORGANIC HALOGENS	mg/L	08/02/83	C	0.01400
				ND	0.01000
				ND	0.01000
				ND	0.01000
06-16	IRON	mg/L	09/20/82	ND	0.03000
06-16	IRON	mg/L	03/01/83	ND	0.03000
06-16	MANGANESE	mg/L	09/20/82	ND	0.01000
06-16	MANGANESE	mg/L	03/01/83		0.03000
06-16	SODIUM	mg/L	09/20/82		9.00000
06-16	SODIUM	mg/L	03/01/83		10.00000
06-16	SULFATE	mg/L	09/20/82		22.00000
06-16	SULFATE	mg/L	03/01/83	ND	5.00000
06-16	CHLORIDE	mg/L	09/20/82		4.00000
06-16	CHLORIDE	mg/L	03/01/83		4.00000
06-16	PHENOLS	mg/L	09/20/82	ND	0.01000
06-16	PHENOLS	mg/L	03/01/83	ND	0.01000
06-16	TNT	mg/L	01/28/85	<	0.00500
06-16	RDX	mg/L	03/01/83	ND	0.10000
06-16	RDX	mg/L	08/02/83	ND	0.10000
06-16	RDX	mg/L	01/28/85	<	0.01000
06-16	HMX	mg/L	03/01/83	ND	0.10000
06-16	HMX	mg/L	08/02/83		0.10000
06-16	HMX	mg/L	01/28/85	<	0.05000

FAST LIST REPORT FOR A DATE RANGE
SITE : 06 DEM AREA/OLD RIFLE RANGE
DATE RANGE FROM: 11/16/81 TO: 06/15/86

WELLNUMBER	PARAMETER NAME	UNITS	DATESAMPLE	AMOUNT DETECTED	
06-16	ARSENIC	mg/L	09/20/82	ND	0.01000
06-16	ARSENIC	mg/L	01/28/85	<	4.00000
06-16	BARIUM	mg/L	09/20/82	ND	0.10000
06-16	BARIUM	mg/L	01/28/85		0.09500
06-16	CADMIUM	mg/L	09/20/82	ND	0.00500
06-16	CADMIUM	mg/L	01/28/85	<	0.00040
06-16	CHROMIUM	mg/L	09/20/82	ND	0.01000
06-16	CHROMIUM	mg/L	01/28/85	<	0.02000
06-16	LEAD	mg/L	09/20/82	ND	0.01000
06-16	LEAD	mg/L	01/28/85	<	0.00500
06-16	MERCURY	mg/L	09/20/82	ND	0.00020
06-16	MERCURY	mg/L	01/28/85	<	0.00030
06-16	SELENIUM	mg/L	09/20/82	ND	0.00500
06-16	SELENIUM	mg/L	01/28/85	<	0.00400
06-16	SILVER	mg/L	09/20/82	ND	0.01000
06-16	SILVER	mg/L	01/28/85	<	0.01000
06-16	FLUORIDE	mg/L	09/20/82	ND	0.10000
06-16	NO2+NO3 AS N	mg/L	09/20/82		0.29000
06-16	ENDRIN	mg/L	09/20/82	ND	0.00004
06-16	LINDANE	mg/L	09/20/82	ND	0.00008
06-16	METHOXYCHLOR	mg/L	09/20/82	ND	0.00160
06-16	TOXAPHENE	mg/L	09/20/82	ND	0.00160
06-16	2,4-D	mg/L	09/20/82	ND	0.00380
06-16	GROSS ALPHA	pcu/L	11/16/81	ND	1.30000
06-16	GROSS ALPHA	pcu/L	03/01/82	ND	3.63000
06-16	GROSS ALPHA	pcu/L	06/28/82	ND	3.30000
06-16	GROSS ALPHA	pcu/L	09/20/82	ND	3.57000
06-16	GROSS ALPHA	pcu/L	09/20/82	ND	3.57000
06-16	GROSS BETA	pcu/L	11/16/81		1.23000
06-16	GROSS BETA	pcu/L	03/01/82		1.37000
06-16	GROSS BETA	pcu/L	06/28/82	ND	1.66000
06-16	GROSS BETA	pcu/L	09/20/82	ND	1.67000
06-16	GROSS BETA	pcu/L	09/20/82	ND	1.67000
06-16	SILVEX	mg/L	09/20/82	ND	0.00050
06-16	ORGANIC CARBON, TOTAL	mg/L	09/20/82		14.00000
					13.00000
					13.00000
					13.00000
06-16	ORGANIC CARBON, TOTAL	mg/L	03/01/83		19.00000
					19.00000
					20.00000
					19.00000
06-16	ORGANIC CARBON, TOTAL	mg/L	03/01/83	ND	0.10000
06-16	2,4-DINITROTOLUENE (DNT)	mg/L	03/01/83	ND	0.10000
06-16	2,6-DINITROTOLUENE (DNT)	mg/L	03/01/83	ND	0.10000
06-16	TETRYL	mg/L	03/01/83	ND	0.10000
06-16	ORGANIC CARBON, TOTAL	mg/L	08/02/83		23.00000
					22.00000
					22.00000
					23.00000
06-16	2,4,6-TNT	mg/L	08/02/83	ND	0.10000

FAST LIST REPORT FOR A DATE RANGE
SITE : 06 DEM AREA/OLD RIFLE RANGE
DATE RANGE FROM: 11/16/81 TO: 06/15/86

WELLNUMBER	PARAMETER NAME	UNITS	DATESAMPLE	AMOUNT DETECTED	
06-16	2,4-DINITROTOLUENE (DNT)	mg/L	08/02/83	ND	0.10000
06-16	2,6-DINITROTOLUENE (DNT)	mg/L	08/02/83	ND	0.10000
06-16	TETRYL	mg/L	08/02/83	ND	0.10000
06-16	ORGANIC CHLORINE	mg/L	02/07/84	ND	0.01000
06-16	ORGANIC BROMINE	mg/L	02/07/84	ND	0.00200
06-16	ORGANIC IODINE	mg/L	02/07/84		0.01800
06-16	ORGANIC CARBON, TOTAL	mg/L	02/07/84	ND	2.00000
06-17	pH, Field	S.U.	09/20/82		6.40000
					6.50000
					6.50000
					6.70000
06-17	pH, Field	S.U.	03/01/83		6.00000
					6.00000
					6.00000
					6.00000
06-17	pH, Field	S.U.	08/02/83		6.10000
					6.10000
					6.10000
					6.10000
06-17	SPECIFIC CONDUCTANCE	umho/cm	09/20/82		460.00000
					460.00000
					460.00000
					460.00000
06-17	SPECIFIC CONDUCTANCE	umho/cm	03/01/83		266.00000
					265.00000
					267.00000
					267.00000
06-17	SPECIFIC CONDUCTANCE	umho/cm	08/02/83		350.00000
					350.00000
					350.00000
					350.00000
06-17	TOTAL ORGANIC HALOGENS	mg/L	09/20/82	ND	0.01000
				ND	0.01000
				ND	0.01000
				ND	0.01000
06-17	TOTAL ORGANIC HALOGENS	mg/L	03/01/83		0.02600
					0.02000
					0.01900
					0.02400
06-17	TOTAL ORGANIC HALOGENS	mg/L	08/02/83	ND	0.01000
				ND	0.01000
				C	0.01500
				ND	0.01000
06-17	IRON	mg/L	09/20/82	ND	0.03000
06-17	IRON	mg/L	03/01/83	ND	0.03000
06-17	MANGANESE	mg/L	09/20/82		0.02000
06-17	MANGANESE	mg/L	03/01/83	ND	0.01000
06-17	SODIUM	mg/L	09/20/82		3.00000
06-17	SODIUM	mg/L	03/01/83		3.00000
06-17	SULFATE	mg/L	09/20/82		32.00000
06-17	SULFATE	mg/L	03/01/83		29.00000

FAST LIST REPORT FOR A DATE RANGE
SITE : 06 DEM AREA/OLD RIFLE RANGE
DATE RANGE FROM: 11/16/81 TO: 06/15/86

WELLNUMBER	PARAMETER NAME	UNITS	DATESAMPLE	AMOUNT DETECTED	
06-17	CHLORIDE	mg/L	09/20/82		2.00000
06-17	CHLORIDE	mg/L	03/01/83		2.00000
06-17	PHENOLS	mg/L	09/20/82	ND	0.01000
06-17	PHENOLS	mg/L	03/01/83	ND	0.01000
06-17	TNT	mg/L	01/28/85	<	0.00500
06-17	TNT	mg/L	02/02/86	ND	0.00500
06-17	RDX	mg/L	03/01/83	ND	0.10000
06-17	RDX	mg/L	08/02/83	ND	0.10000
06-17	RDX	mg/L	01/28/85		0.01000
06-17	RDX	mg/L	02/02/86	ND	0.01000
06-17	HMX	mg/L	03/01/83	ND	0.10000
06-17	HMX	mg/L	08/02/83	ND	0.10000
06-17	HMX	mg/L	01/28/85	<	0.05000
06-17	HMX (BY HPLC)	mg/L	02/02/86	ND	0.05000
06-17	ARSENIC	mg/L	09/20/82	ND	0.01000
06-17	ARSENIC	mg/L	01/28/85	<	0.00400
06-17	ARSENIC, TOTAL	mg/L	02/02/86	ND	0.00100
06-17	BARIUM	mg/L	09/20/82	ND	0.10000
06-17	BARIUM	mg/L	01/28/85		0.20000
06-17	BARIUM, TOTAL	mg/L	02/02/86		0.32000
06-17	CADMIUM	mg/L	09/20/82	ND	0.00500
06-17	CADMIUM	mg/L	01/28/85	<	0.00040
06-17	CADMIUM, TOTAL	mg/L	02/02/86	<	0.01000
06-17	CHROMIUM	mg/L	09/20/82	ND	0.01000
06-17	CHROMIUM	mg/L	01/28/85	<	0.02000
06-17	CHROMIUM, TOTAL	mg/L	02/02/86		0.0500
06-17	LEAD	mg/L	09/20/82	ND	0.01000
06-17	LEAD	mg/L	01/28/85	<	0.00500
06-17	LEAD, TOTAL	mg/L	02/02/86	<	0.03000
06-17	MERCURY	mg/L	09/20/82	ND	0.00020
06-17	MERCURY	mg/L	01/28/85	<	0.00030
06-17	MERCURY	mg/L	02/02/86	<	0.00020
06-17	SELENIUM	mg/L	09/20/82	ND	0.00500
06-17	SELENIUM	mg/L	01/28/85	<	0.00400
06-17	SELENIUM, TOTAL	mg/L	02/02/86	<	0.00100
06-17	SILVER	mg/L	09/20/82	ND	0.01000
06-17	SILVER	mg/L	01/28/85	<	0.01000
06-17	SILVER, TOTAL	mg/L	02/02/86	ND	0.00500
06-17	FLUORIDE	mg/L	09/20/82	ND	0.10000
06-17	FLUORIDE, TOTAL	mg/L	02/02/86		0.20000
06-17	NO2+NO3 AS N	mg/L	09/20/82		1.00000
06-17	ENDRIN	mg/L	09/20/82	ND	0.00004
06-17	LINDANE	mg/L	09/20/82	ND	0.00008
06-17	METHOXYCHLOR	mg/L	09/20/82	ND	0.00160
06-17	TOXAPHENE	mg/L	09/20/82	ND	0.00160
06-17	2,4-D	mg/L	09/20/82	ND	0.00380
06-17	GROSS ALPHA	pcu/L	11/16/81	ND	1.30000
06-17	GROSS ALPHA	pcu/L	03/01/82	ND	3.63000
06-17	GROSS ALPHA	pcu/L	06/28/82		3.18000
06-17	GROSS ALPHA	pcu/L	09/20/82	ND	3.57000
06-17	GROSS ALPHA	pcu/L	09/20/82	ND	3.57000

FAST LIST REPORT FOR A DATE RANGE
SITE : 06 DEM AREA/OLD RIFLE RANGE
DATE RANGE FROM: 11/16/81 TO: 06/15/86

WELLNUMBER	PARAMETER NAME	UNITS	DATESAMPLE	AMOUNT DETECTED	
06-17	GROSS BETA	pcu/L	11/16/81		2.20000
06-17	GROSS BETA	pcu/L	03/01/82		2.25000
06-17	GROSS BETA	pcu/L	06/28/82		2.43000
06-17	GROSS BETA	pcu/L	09/20/82		2.53000
06-17	GROSS BETA	pcu/L	09/20/82		2.53000
06-17	SILVEX	mg/L	09/20/82	ND	0.00050
06-17	ORGANIC CARBON, TOTAL	mg/L	09/20/82		11.00000
					11.00000
					11.00000
					11.00000
06-17	ORGANIC CARBON, TOTAL	mg/L	03/01/83		15.00000
					14.00000
					14.00000
					14.00000
06-17	2,4,6-TNT	mg/L	03/01/83	ND	0.10000
06-17	2,4-DINITROTOLUENE (DNT)	mg/L	03/01/83	ND	0.10000
06-17	2,6-DINITROTOLUENE (DNT)	mg/L	03/01/83	ND	0.10000
06-17	TETRYL	mg/L	03/01/83	ND	0.10000
06-17	ORGANIC CARBON, TOTAL	mg/L	08/02/83		13.00000
					13.00000
					13.00000
					14.00000
06-17	2,4,6-TNT	mg/L	08/02/83	ND	0.10000
06-17	2,4-DINITROTOLUENE (DNT)	mg/L	08/02/83	ND	0.10000
06-17	2,6-DINITROTOLUENE (DNT)	mg/L	08/02/83	ND	0.10000
06-17	TETRYL	mg/L	08/02/83	ND	0.10000
06-18	pH, Field	S.U.	09/20/82		6.70000
					6.70000
					6.80000
					6.80000
06-18	pH, Field	S.U.	03/01/83		6.70000
					6.80000
					6.80000
					6.80000
06-18	pH, Field	S.U.	08/02/83		7.10000
					7.10000
					7.10000
					7.10000
06-18	SPECIFIC CONDUCTANCE	umho/cm	09/20/82		460.00000
					450.00000
					450.00000
					460.00000
06-18	SPECIFIC CONDUCTANCE	umho/cm	03/01/83		410.00000
					410.00000
					415.00000
					415.00000
06-18	SPECIFIC CONDUCTANCE	umho/cm	08/02/83		500.00000
					495.00000
					490.00000
					500.00000
06-18	TOTAL ORGANIC HALOGENS	mg/L	09/20/82	ND	0.01000
					0.03800
					0.01300
				ND	0.01000

FAST LIST REPORT FOR A DATE RANGE
SITE : 06 DEM AREA/OLD RIFLE RANGE
DATE RANGE FROM: 11/16/81 TO: 06/15/86

WELLNUMBER	PARAMETER NAME	UNITS	DATESAMPLE	AMOUNT DETECTED	
06-18	TOTAL ORGANIC HALOGENS	mg/L	03/01/83		0.05800
					0.05100
					0.05000
					0.01700
06-18	TOTAL ORGANIC HALOGENS	mg/L	08/02/83	C	0.02500
				C	0.02400
				C	0.02300
				C	0.02700
06-18	IRON	mg/L	09/20/82		0.07000
06-18	IRON	mg/L	03/01/83	ND	0.03000
06-18	MANGANESE	mg/L	09/20/82		0.02000
06-18	MANGANESE	mg/L	03/01/83		0.01000
06-18	SODIUM	mg/L	09/20/82		15.00000
06-18	SODIUM	mg/L	03/01/83		19.00000
06-18	SULFATE	mg/L	09/20/82		10.90000
06-18	SULFATE	mg/L	03/01/83	ND	5.00000
06-18	CHLORIDE	mg/L	09/20/82		3.60000
06-18	CHLORIDE	mg/L	03/01/83		4.00000
06-18	PHENOLS	mg/L	09/20/82	ND	0.01000
06-18	PHENOLS	mg/L	03/01/83	ND	0.01000
06-18	TNT	mg/L	01/28/85	<	0.00500
06-18	TNT	mg/L	02/02/86		0.02700
06-18	RDX	mg/L	03/01/83	ND	0.10000
06-18	RDX	mg/L	08/02/83	ND	0.10000
06-18	RDX	mg/L	01/28/85	<	0.01000
06-18	RDX	mg/L	02/02/86		0.04400
06-18	HMX	mg/L	03/01/83	ND	0.10000
06-18	HMX	mg/L	08/02/83	ND	0.10000
06-18	HMX	mg/L	01/28/85	<	0.05000
06-18	HMX (BY HPLC)	mg/L	02/02/86	ND	0.05000
06-18	ARSENIC	mg/L	09/20/82	ND	0.01000
06-18	ARSENIC	mg/L	01/28/85	<	0.00400
06-18	ARSENIC, TOTAL	mg/L	02/02/86	<	0.00100
06-18	BARIUM	mg/L	09/20/82	ND	0.10000
06-18	BARIUM	mg/L	01/28/85		0.08000
06-18	BARIUM, TOTAL	mg/L	02/02/86		0.44000
06-18	CADMIUM	mg/L	09/20/82	ND	0.00500
06-18	CADMIUM	mg/L	01/28/85	<	0.00040
06-18	CADMIUM, TOTAL	mg/L	02/02/86	<	0.01000
06-18	CHROMIUM	mg/L	09/20/82	ND	0.01000
06-18	CHROMIUM	mg/L	01/28/85	<	0.02000
06-18	CHROMIUM, TOTAL	mg/L	02/02/86		0.06000
06-18	LEAD	mg/L	09/20/82	ND	0.01000
06-18	LEAD	mg/L	01/28/85	<	0.00500
06-18	LEAD, TOTAL	mg/L	02/02/86	<	0.03000
06-18	MERCURY	mg/L	09/20/82	ND	0.00020
06-18	MERCURY	mg/L	01/28/85	<	0.00030
06-18	MERCURY	mg/L	02/02/86	ND	0.00020
06-18	SELENIUM	mg/L	09/20/82	ND	0.00500
06-18	SELENIUM	mg/L	01/28/85	<	0.00400
06-18	SELENIUM, TOTAL	mg/L	02/02/86	<	0.00200

FAST LIST REPORT FOR A DATE RANGE
SITE : 06 DEM AREA/OLD RIFLE RANGE
DATE RANGE FROM: 11/16/81 TO: 06/15/86

WELLNUMBER	PARAMETER NAME	UNITS	DATESAMPLE	AMOUNT DETECTED	
06-18	SILVER	mg/L	09/20/82	ND	0.01000
06-18	SILVER	mg/L	01/28/85	<	0.01000
06-18	SILVER, TOTAL	mg/L	02/02/86	ND	0.00500
06-18	FLUORIDE	mg/L	09/20/82	ND	0.10000
06-18	FLUORIDE, TOTAL	mg/L	02/02/86		0.10000
06-18	NO2+NO3 AS N	mg/L	09/20/82		11.90000
06-18	ENDRIN	mg/L	09/20/82	ND	0.00004
06-18	LINDANE	mg/L	09/20/82	ND	0.00008
06-18	METHOXYCHLOR	mg/L	09/20/82	ND	0.00160
06-18	TOXAPHENE	mg/L	09/20/82	ND	0.00160
06-18	2,4-D	mg/L	09/20/82	ND	0.00380
06-18	GROSS ALPHA	pcu/L	01/04/82	ND	3.67000
06-18	GROSS ALPHA	pcu/L	03/01/82	ND	3.63000
06-18	GROSS ALPHA	pcu/L	06/28/82	ND	3.30000
06-18	GROSS ALPHA	pcu/L	09/20/82		2.26000
06-18	GROSS ALPHA	pcu/L	09/20/82		2.26000
06-18	GROSS BETA	pcu/L	01/04/82		1.33000
06-18	GROSS BETA	pcu/L	03/01/82	ND	1.64000
06-18	GROSS BETA	pcu/L	06/28/82	ND	1.66000
06-18	GROSS BETA	pcu/L	09/20/82	ND	1.67000
06-18	GROSS BETA	pcu/L	09/20/82	ND	1.67000
06-18	SILVEX	mg/L	09/20/82	ND	0.00050
06-18	ORGANIC CARBON, TOTAL	mg/L	09/20/82	ND	1.00000
				ND	1.00000
					2.00000
					2.00000
06-18	ORGANIC CARBON, TOTAL	mg/L	03/01/83		18.00000
					17.00000
					17.00000
					17.00000
06-18	2,4,6-TNT	mg/L	03/01/83	ND	0.10000
06-18	2,4-DINITROTOLUENE (DNT)	mg/L	03/01/83	ND	0.10000
06-18	2,6-DINITROTOLUENE (DNT)	mg/L	03/01/83	ND	0.10000
06-18	TETRYL	mg/L	03/01/83	ND	0.10000
06-18	ORGANIC CARBON, TOTAL	mg/L	08/02/83		22.00000
					22.00000
					21.00000
					21.00000
06-18	2,4,6-TNT	mg/L	08/02/83	ND	0.10000
06-18	2,4-DINITROTOLUENE (DNT)	mg/L	08/02/83	ND	0.10000
06-18	2,6-DINITROTOLUENE (DNT)	mg/L	08/02/83	ND	0.10000
06-18	TETRYL	mg/L	08/02/83	ND	0.10000
06-19	pH, Field	S.U.	09/20/82		6.50000
					6.60000
					6.60000
					6.60000
06-19	pH, Field	S.U.	03/01/83		6.90000
					6.80000
					6.80000
					6.80000
06-19	pH, Field	S.U.	08/02/83		7.10000
					7.20000
					7.10000
					7.10000

FAST LIST REPORT FOR A DATE RANGE
SITE : 06 DEM AREA/OLD RIFLE RANGE
DATE RANGE FROM: 11/16/81 TO: 06/15/86

WELLNUMBER	PARAMETER NAME	UNITS	DATESAMPLE		AMOUNT DETECTED
06-19	SPECIFIC CONDUCTANCE	umho/cm	09/20/82		630.00000
					630.00000
					630.00000
					630.00000
06-19	SPECIFIC CONDUCTANCE	umho/cm	03/01/83		600.00000
					595.00000
					600.00000
					600.00000
06-19	SPECIFIC CONDUCTANCE	umho/cm	08/02/83		690.00000
					690.00000
					700.00000
					690.00000
06-19	TOTAL ORGANIC HALOGENS	mg/L	09/20/82		0.02900
					0.02100
				ND	0.01000
					0.01000
06-19	TOTAL ORGANIC HALOGENS	mg/L	03/01/83		0.03400
					0.04000
					0.03500
					0.04000
06-19	TOTAL ORGANIC HALOGENS	mg/L	08/02/83	C	0.04000
				C	0.05400
				C	0.04900
				C	0.02500
06-19	IRON	mg/L	09/20/82		0.16000
06-19	IRON	mg/L	03/01/83	ND	0.03000
06-19	MANGANESE	mg/L	09/20/82		2.90000
06-19	MANGANESE	mg/L	03/01/83		0.29000
06-19	SODIUM	mg/L	09/20/82		32.00000
06-19	SODIUM	mg/L	03/01/83		14.00000
06-19	SULFATE	mg/L	09/20/82		33.00000
06-19	SULFATE	mg/L	03/01/83		44.00000
06-19	CHLORIDE	mg/L	09/20/82		3.00000
06-19	CHLORIDE	mg/L	03/01/83		2.00000
06-19	PHENOLS	mg/L	09/20/82	ND	0.01000
06-19	PHENOLS	mg/L	03/01/83	ND	0.01000
06-19	TNT	mg/L	01/28/85	<	0.00500
06-19	TNT	mg/L	02/02/86	ND	0.00500
06-19	RDX	mg/L	03/01/83	ND	0.10000
06-19	RDX	mg/L	08/02/83	ND	0.10000
06-19	RDX	mg/L	01/28/85	<	0.01000
06-19	RDX	mg/L	02/02/86	ND	0.01000
06-19	HMX	mg/L	03/01/83	ND	0.10000
06-19	HMX	mg/L	08/02/83	ND	0.10000
06-19	HMX	mg/L	01/28/85	<	0.05000
06-19	HMX (BY HPLC)	mg/L	02/02/86	ND	0.05000
06-19	ARSENIC	mg/L	09/20/82	ND	0.01000
06-19	ARSENIC	mg/L	01/28/85	<	0.00400
06-19	ARSENIC, TOTAL	mg/L	02/02/86		0.00100
06-19	BARIUM	mg/L	09/20/82		0.40000
06-19	BARIUM	mg/L	01/28/85		0.33000

FAST LIST REPORT FOR A DATE RANGE
SITE : 06 DEM AREA/OLD RIFLE RANGE
DATE RANGE FROM: 11/16/81 TO: 06/15/86

WELLNUMBER	PARAMETER NAME	UNITS	DATESAMPLE	AMOUNT DETECTED	
06-19	BARIUM, TOTAL	mg/L	02/02/86		0.77000
06-19	CADMIUM	mg/L	09/20/82	ND	0.00500
06-19	CADMIUM	mg/L	01/28/85	<	0.00040
06-19	CADMIUM, TOTAL	mg/L	02/02/86	ND	0.01000
06-19	CHROMIUM	mg/L	09/20/82	ND	0.01000
06-19	CHROMIUM	mg/L	01/28/85	<	0.02000
06-19	CHROMIUM, TOTAL	mg/L	02/02/86		0.06000
06-19	LEAD	mg/L	09/20/82	ND	0.01000
06-19	LEAD	mg/L	01/28/85	<	0.00500
06-19	LEAD, TOTAL	mg/L	02/02/86	<	0.03000
06-19	MERCURY	mg/L	09/20/82	ND	0.00020
06-19	MERCURY	mg/L	01/28/85	<	0.00030
06-19	MERCURY	mg/L	02/02/86	ND	0.00020
06-19	SELENIUM	mg/L	09/20/82	ND	0.00500
06-19	SELENIUM	mg/L	01/28/85	<	0.00400
06-19	SELENIUM, TOTAL	mg/L	02/02/86		0.00100
06-19	SILVER	mg/L	09/20/82	ND	0.01000
06-19	SILVER	mg/L	01/28/85	<	0.01000
06-19	SILVER, TOTAL	mg/L	02/02/86	ND	0.00500
06-19	FLUORIDE	mg/L	09/20/82		0.14000
06-19	FLUORIDE, TOTAL	mg/L	02/02/86		0.20000
06-19	NO2+NO3 AS N	mg/L	09/20/82		0.22000
06-19	ENDRIN	mg/L	09/20/82	ND	0.00004
06-19	LINDANE	mg/L	09/20/82	ND	0.00008
06-19	METHOXYCHLOR	mg/L	09/20/82	ND	0.00160
06-19	TOXAPHENE	mg/L	09/20/82	ND	0.00160
06-19	2,4-D	mg/L	09/20/82	ND	0.00380
06-19	GROSS ALPHA	pcu/L	01/04/82	ND	3.67000
06-19	GROSS ALPHA	pcu/L	03/01/82	ND	3.63000
06-19	GROSS ALPHA	pcu/L	06/28/82		5.14000
06-19	GROSS ALPHA	pcu/L	09/20/82	ND	3.57000
06-19	GROSS ALPHA	pcu/L	09/20/82		2.48000
06-19	GROSS ALPHA	pcu/L	09/20/82	ND	3.57000
06-19	GROSS BETA	pcu/L	01/04/82		3.96000
06-19	GROSS BETA	pcu/L	03/01/82		2.28000
06-19	GROSS BETA	pcu/L	06/28/82		3.11000
06-19	GROSS BETA	pcu/L	09/20/82		2.48000
06-19	SILVEX	mg/L	09/20/82	ND	0.00050
06-19	ORGANIC CARBON, TOTAL	mg/L	09/20/82		29.00000
					29.00000
					30.00000
					31.00000
06-19	ORGANIC CARBON, TOTAL	mg/L	03/01/83		5.00000
					5.00000
					5.00000
					5.00000
06-19	2,4,6-TNT	mg/L	03/01/83	ND	0.10000
06-19	2,4-DINITROTOLUENE (DNT)	mg/L	03/01/83	ND	0.10000
06-19	2,6-DINITROTOLUENE (DNT)	mg/L	03/01/83	ND	0.10000
06-19	TETRYL	mg/L	03/01/83	ND	0.10000
06-19	ORGANIC CARBON, TOTAL	mg/L	08/02/83		42.00000
					43.00000
					43.00000
					43.00000

FAST LIST REPORT FOR A DATE RANGE
SITE : 06 DEM AREA/OLD RIFLE RANGE
DATE RANGE FROM: 11/16/81 TO: 06/15/86

WELLNUMBER	PARAMETER NAME	UNITS	DATESAMPLE	AMOUNT DETECTED	
06-19	2,4,6-TNT	mg/L	08/02/83	ND	0.10000
06-19	2,4-DINITROTOLUENE (DNT)	mg/L	08/02/83	ND	0.10000
06-19	2,6-DINITROTOLUENE (DNT)	mg/L	08/02/83	ND	0.10000
06-19	TETRYL	mg/L	08/02/83	ND	0.10000
06-20	pH, Field	S.U.	09/20/82		6.90000
					6.90000
					6.90000
					69.00000
06-20	pH, Field	S.U.	03/01/83		6.90000
					6.90000
					6.90000
					6.70000
06-20	pH, Field	S.U.	08/02/83		6.70000
					6.70000
					6.70000
					6.80000
06-20	SPECIFIC CONDUCTANCE	umho/cm	09/20/82		350.00000
					350.00000
					350.00000
					350.00000
06-20	SPECIFIC CONDUCTANCE	umho/cm	03/01/83		281.00000
					281.00000
					280.00000
					280.00000
06-20	SPECIFIC CONDUCTANCE	umho/cm	08/02/83		400.00000
					400.00000
					400.00000
					400.00000
06-20	TOTAL ORGANIC HALOGENS	mg/L	09/20/82		0.05100
					0.07600
					0.06100
					0.05800
06-20	TOTAL ORGANIC HALOGENS	mg/L	03/01/83		0.05800
					0.06700
					0.05200
					0.02000
06-20	TOTAL ORGANIC HALOGENS	mg/L	08/02/83	C	0.02500
				C	0.02300
				C	0.02800
				C	0.02700
06-20	IRON	mg/L	09/20/82		0.30000
06-20	IRON	mg/L	03/01/83	ND	0.03000
06-20	MANGANESE	mg/L	09/20/82	ND	0.01000
06-20	MANGANESE	mg/L	03/01/83		0.01000
06-20	SODIUM	mg/L	09/20/82		13.00000
06-20	SODIUM	mg/L	03/01/83		13.00000
06-20	SULFATE	mg/L	09/20/82		16.00000
06-20	SULFATE	mg/L	03/01/83	ND	5.00000
06-20	CHLORIDE	mg/L	09/20/82		3.00000
06-20	CHLORIDE	mg/L	03/01/83		3.00000
06-20	PHENOLS	mg/L	09/20/82	ND	0.01000

FAST LIST REPORT FOR A DATE RANGE
SITE : 06 DEM AREA/OLD RIFLE RANGE
DATE RANGE FROM: 11/16/81 TO: 06/15/86

WELLNUMBER	PARAMETER NAME	UNITS	DATESAMPLE	AMOUNT DETECTED	
06-20	GROSS BETA	pcu/L	09/20/82	ND	1.67000
06-20	GROSS BETA	pcu/L	09/20/82	ND	1.67000
06-20	SILVEX	mg/L	09/20/82	ND	0.00050
06-20	ORGANIC CARBON, TOTAL	mg/L	09/20/82		8.00000
					8.00000
					8.00000
					8.00000
06-20	ORGANIC CARBON, TOTAL	mg/L	03/01/83		9.00000
					9.00000
					9.00000
					9.00000
06-20	2,4,6-TNT	mg/L	03/01/83	ND	0.10000
06-20	2,4-DINITROTOLUENE (DNT)	mg/L	03/01/83	ND	0.10000
06-20	2,6-DINITROTOLUENE (DNT)	mg/L	03/01/83	ND	0.10000
06-20	TETRYL	mg/L	03/01/83	ND	0.10000
06-20	ORGANIC CARBON, TOTAL	mg/L	08/02/83		13.00000
					13.00000
					13.00000
					14.00000
06-20	2,4,6-TNT	mg/L	08/02/83	ND	0.10000
06-20	2,4-DINITROTOLUENE (DNT)	mg/L	08/02/83	ND	0.10000
06-20	2,6-DINITROTOLUENE (DNT)	mg/L	08/02/83	ND	0.10000
06-20	TETRYL	mg/L	08/02/83	ND	0.10000
06-21	TNT	mg/L	01/28/85	<	0.00501
06-21	RDX	mg/L	01/28/85	<	0.01000
06-21	HMX	mg/L	01/28/85	<	0.05000
06-21	ARSENIC	mg/L	01/28/85	<	0.00400
06-21	BARIUM	mg/L	01/28/85		0.06000
06-21	CADMIUM	mg/L	01/28/85	<	0.00040
06-21	CHROMIUM	mg/L	01/28/85	<	0.02000
06-21	LEAD	mg/L	01/28/85	<	0.00500
06-21	MERCURY	mg/L	01/28/85	<	0.00030
06-21	SELENIUM	mg/L	01/28/85	<	0.00400
06-21	SILVER	mg/L	01/28/85	<	0.01000
06-22	TNT	mg/L	01/28/85	<	0.00500
06-22	TNT	mg/L	06/15/86		0.23000
06-22	RDX	mg/L	01/28/85	<	0.01000
06-22	RDX	mg/L	06/15/86		0.13000
06-22	HMX	mg/L	01/28/85	<	0.05000
06-22	HMX (BY HPLC)	mg/L	06/15/86	ND	0.05000
06-22	ARSENIC	mg/L	01/28/85	<	0.00400
06-22	BARIUM	mg/L	01/28/85		0.11000
06-22	CADMIUM	mg/L	01/28/85	<	0.00040
06-22	CHROMIUM	mg/L	01/28/85	<	0.02000
06-22	LEAD	mg/L	01/28/85	<	0.00500
06-22	MERCURY	mg/L	01/28/85	<	0.00030
06-22	SELENIUM	mg/L	01/28/85	<	0.00400
06-22	SILVER	mg/L	01/28/85	<	0.01000
06-23	TNT	mg/L	01/28/85		0.00500
06-23	RDX	mg/L	01/28/85	<	0.01000
06-23	HMX	mg/L	01/28/85	<	0.05000

FAST LIST REPORT FOR A DATE RANGE
SITE : 06 DEM AREA/OLD RIFLE RANGE
DATE RANGE FROM: 11/16/81 TO: 06/15/86

WELLNUMBER	PARAMETER NAME	UNITS	DATESAMPLE	AMOUNT DETECTED	
06-23	ARSENIC	mg/L	01/28/85	<	0.00400
06-23	BARIUM	mg/L	01/28/85	<	0.05000
06-23	CADMIUM	mg/L	01/28/85	<	0.00040
06-23	CHROMIUM	mg/L	01/28/85	<	0.02000
06-23	LEAD	mg/L	01/28/85	<	0.00500
06-23	MERCURY	mg/L	01/28/85	<	0.00030
06-23	SELENIUM	mg/L	01/28/85	<	0.00400
06-23	SILVER	mg/L	01/28/85	<	0.01000

FAST LIST REPORT FOR A DATE RANGE
SITE : 06 DEM AREA/OLD RIFLE RANGE
DATE RANGE FROM: 11/16/81 TO: 06/15/86

WELLNUMBER	PARAMETER NAME	UNITS	DATESAMPLE	AMOUNT DETECTED	
06-20	PHENOLS	mg/L	03/01/83	ND	0.01000
06-20	TNT	mg/L	01/28/85	<	0.00500
06-20	TNT	mg/L	02/02/86	ND	0.00500
06-20	RDX	mg/L	03/01/83	ND	0.10000
06-20	RDX	mg/L	08/02/83	ND	0.10000
06-20	RDX	mg/L	01/28/85	<	0.01000
06-20	RDX	mg/L	02/02/86	ND	0.01000
06-20	HMX	mg/L	03/01/83	ND	0.10000
06-20	HMX	mg/L	08/02/83	ND	0.10000
06-20	HMX	mg/L	01/28/85	<	0.05000
06-20	HMX (BY HPLC)	mg/L	02/02/86	ND	0.05000
06-20	ARSENIC	mg/L	09/20/82	ND	0.01000
06-20	ARSENIC	mg/L	01/28/85	<	0.00400
06-20	ARSENIC, TOTAL	mg/L	02/02/86	ND	0.00100
06-20	BARIUM	mg/L	09/20/82		0.20000
06-20	BARIUM	mg/L	01/28/85		0.11000
06-20	BARIUM, TOTAL	mg/L	02/02/86		0.34000
06-20	CADMIUM	mg/L	09/20/82	ND	0.00500
06-20	CADMIUM	mg/L	01/28/85	<	0.00040
06-20	CADMIUM, TOTAL	mg/L	02/02/86	<	0.01000
06-20	CHROMIUM	mg/L	09/20/82	ND	0.01000
06-20	CHROMIUM	mg/L	01/28/85	<	0.02000
06-20	CHROMIUM, TOTAL	mg/L	02/02/86		0.04000
06-20	LEAD	mg/L	09/20/82	ND	0.01000
06-20	LEAD	mg/L	01/28/85	<	0.00500
06-20	LEAD, TOTAL	mg/L	02/02/86	<	0.03000
06-20	MERCURY	mg/L	09/20/82	ND	0.00020
06-20	MERCURY	mg/L	01/28/85	<	0.00030
06-20	MERCURY	mg/L	02/02/86	ND	0.00020
06-20	SELENIUM	mg/L	09/20/82	ND	0.00500
06-20	SELENIUM	mg/L	01/28/85	<	0.00400
06-20	SELENIUM, TOTAL	mg/L	02/02/86	ND	0.00500
06-20	SILVER	mg/L	09/20/82	ND	0.01000
06-20	SILVER	mg/L	01/28/85	<	0.01000
06-20	SILVER, TOTAL	mg/L	02/02/86	ND	0.00500
06-20	FLUORIDE	mg/L	09/20/82	ND	0.10000
06-20	FLUORIDE, TOTAL	mg/L	02/02/86		0.30000
06-20	NO2+NO3 AS N	mg/L	09/20/82		7.00000
06-20	ENDRIN	mg/L	09/20/82	ND	0.00004
06-20	LINDANE	mg/L	09/20/82	ND	0.00008
06-20	METHOXYCHLOR	mg/L	09/20/82	ND	0.00100
06-20	TOXAPHENE	mg/L	09/20/82	ND	0.00100
06-20	2,4-D	mg/L	09/20/82	ND	0.00330
06-20	GROSS ALPHA	pcu/L	01/04/82	ND	3.67000
06-20	GROSS ALPHA	pcu/L	03/01/82	ND	3.63000
06-20	GROSS ALPHA	pcu/L	06/28/82	ND	3.30000
06-20	GROSS ALPHA	pcu/L	09/20/82	ND	3.57000
06-20	GROSS ALPHA	pcu/L	09/20/82	ND	3.57000
06-20	GROSS BETA	pcu/L	01/04/82	ND	1.61000
06-20	GROSS BETA	pcu/L	03/01/82	ND	1.64000
06-20	GROSS BETA	pcu/L	06/28/82	ND	1.66000

SAMPLE ANALYSIS RESULTS
****

NAVWPNSUPPCEN, BLDG 2516
CRANE, INDIANA 47522
ATTN: JO BELCHER

ANACON# 7002
DATE 9-15-89

SAMPLE DESCRIPTION: 6-14A 7-18-89

ALL RESULTS ARE IN MG/L

TEST RESULTS:

pH		6.8		
SP.COND,UM/CM		405		
TOC		4		
TOX		0.034		
FE	<0.05	AS	<0.05	ENDRIN
MN	0.075	BA	0.071	LINDANE
NA		CD	<0.01	METHOXYCHLOR
CA		CR	<0.05	TOXAPHENE
MG		PB	<0.05	2,4-D
K		HG	<0.002	2,4,5-TP
SULFATE	44	SE	<0.01	RADIUM,pCi/L
CHLORIDE	10	AG	<0.05	GROSS a,pCi/L
PHENOL	<0.05	FLUORIDE		GROSS b,pCi/L
BICARBONATE		NITRATE-N		COLIFORM
AMMONIA-N				
TNT	<0.02	1,1,1-TRICHLOROETHANE		
RDX	<0.02	TRICHLOROETHYLENE		
HMX	<0.02	D-N-BUTYL PHTHALATE		
PCB		BIS(2-ETHYLHEXYL)PHTHALATE		

SUBMITTED BY _____

SAMPLE ANALYSIS RESULTS
****

NAVWPNSUPPCEN, BLDG 2516
CRANE, INDIANA 47522
ATTN: JO BELCHER

ANACON# 7002
DATE 9-15-89

SAMPLE DESCRIPTION: 6-15 7-18-89

ALL RESULTS ARE IN MG/L

TEST RESULTS:

pH		6.1		
SP.COND,UM/CM		221		
TOC		3		
TOX		0.020		
FE	<0.05	AS	<0.05	ENDRIN
MN	<0.01	BA	0.030	LINDANE
NA		CD	<0.01	METHOXYCHLOR
CA		CR	<0.05	TOXAPHENE
MG		PB	<0.05	2,4-D
K		HG	<0.002	2,4,5-TP
SULFATE	32	SE	<0.01	RADIUM,pCi/L
CHLORIDE	15	AG	<0.05	GROSS a,pCi/L
PHENOL	<0.05	FLUORIDE		GROSS b,pCi/L
BICARBONATE		NITRATE-N		COLIFORM
AMMONIA-N				
TNT	<0.02	1,1,1-TRICHLORDETHANE		
RDX	<0.02	TRICHLORDETHYLENE		
HMX	<0.02	D-N-BUTYL PHTHALATE		
PCB		BIS(2-ETHYLHEXYL)PHTHALATE		

SUBMITTED BY _____

SAMPLE ANALYSIS RESULTS

NAVWPNSUPPCEN, BLDG 2516
CRANE, INDIANA 47522
ATTN: JO BELCHER

ANACON# 7002
DATE 9-15-89

SAMPLE DESCRIPTION: 6-16 7-18-89

ALL RESULTS ARE IN MG/L

TEST RESULTS:

pH		6.8		
SP.COND,UM/CM		257		
TOC		4		
TOX		0.013		
FE	10.4	AS	<0.05	ENDRIN
MN	2.6	BA	0.08	LINDANE
NA	8.5	CD	<0.01	METHOXYCHLOR
CA		CR	<0.05	TOXAPHENE
MG		PB	<0.05	2,4-D
K		HG	<0.002	2,4,5-TP
SULFATE	17	SE	<0.01	RADIUM,pCi/L
CHLORIDE	14	AG	<0.05	GROSS a,pCi/L
PHENOL	<0.05	FLUORIDE		GROSS b,pCi/L
BICARBONATE		NITRATE-N		COLIFORM
AMMONIA-N				
TNT	<0.02	1,1,1-TRICHLOROETHANE		
RDX	<0.02	TRICHLOROETHYLENE		
HMX	<0.02	D-N-BUTYL PHTHALATE		
PCB		BIS(2-ETHYLHEXYL)PHTHALATE		

SUBMITTED BY _____

SAMPLE ANALYSIS RESULTS
****

NAVWPNSUPPCEN, BLDG 2516
CRANE, INDIANA 47522
ATTN: JO BELCHER

ANACON# 7002
DATE 9-15-89

SAMPLE DESCRIPTION: 6-17 7-18-89

ALL RESULTS ARE IN MG/L

TEST RESULTS:

pH		6.4		
SP.COND,UM/CM		273		
TOC		2		
TOX		0.070		
FE	<0.01	AS	<0.05	ENDRIN
MN	0.294	BA	0.04	LINDANE
NA		CD	<0.01	METHOXYCHLOR
CA		CR	<0.05	TOXAPHENE
MG		PB	<0.05	2,4-D
K		HG	<0.002	2,4,5-TP
SULFATE	14	SE	<0.01	RADIUM,pCi/L
CHLORIDE	10	AG	<0.05	GROSS a,pCi/L
PHENOL	<0.05	FLUORIDE		GROSS b,pCi/L
BICARBONATE		NITRATE-N		COLIFORM
AMMONIA-N				
TNT	<0.02	1,1,1-TRICHLOROETHANE		
RDX	<0.02	TRICHLOROETHYLENE		
HMX	<0.02	D-N-BUTYL PHTHALATE		
PCB		BIS(2-ETHYLHEXYL)PHTHALATE		

SUBMITTED BY _____

SAMPLE ANALYSIS RESULTS
****

NAVWPNSUPPCEN, BLDG 2516
CRANE, INDIANA 47522
ATTN: JO BELCHER

ANACON# 7002
DATE 9-15-89

SAMPLE DESCRIPTION: 6-18 7-18-89

ALL RESULTS ARE IN MG/L

TEST RESULTS:

pH		7.2		
SP.COND,UM/CM		315		
TOC		3		
TOX		0.016		
FE	<0.05	AS	<0.05	ENDRIN
MN	<0.01	BA	0.026	LINDANE
NA		CD	<0.01	METHOXYCHLOR
CA		CR	<0.05	TOXAPHENE
MG		PB	<0.05	2,4-D
K		HG	<0.002	2,4,5-TP
SULFATE		SE	<0.01	RADIUM,pCi/L
CHLORIDE	9	AG	<0.05	GROSS a,pCi/L
PHENOL	<0.05	FLUORIDE		GROSS b,pCi/L
BICARBONATE		NITRATE-N		COLIFORM
AMMONIA-N				
TNT	<0.02	1,1,1-TRICHLOROETHANE		
RDX	<0.02	TRICHLOROETHYLENE		
HMX	<0.02	D-N-BUTYL PHTHALATE		
PCB		BIS(2-ETHYLHEXYL)PHTHALATE		

SUBMITTED BY _____

SAMPLE ANALYSIS RESULTS
****

NAVWPNSUPPCEN, BLDG 2516
CRANE, INDIANA 47522
ATTN: JO BELCHER

ANACON# 7002
DATE 9-15-89

SAMPLE DESCRIPTION: 6-19 7-18-89

ALL RESULTS ARE IN MG/L

TEST RESULTS:

pH		7.1		
SP.COND,UM/CM		660		
TOC		11		
TOX		0.026		
FE	<0.05	AS	<0.05	ENDRIN
MN	1.19	BA	0.133	LINDANE
NA		CD	<0.01	METHOXYCHLOR
CA		CR	<0.05	TOXAPHENE
MG		PB	<0.05	2,4-D
K		HG	<0.002	2,4,5-TP
SULFATE		SE	<0.01	RADIUM,pCi/L
CHLORIDE	18	AG	<0.05	GROSS a,pCi/L
PHENOL	<0.05	FLUORIDE		GROSS b,pCi/L
BICARBONATE		NITRATE-N		COLIFORM
AMMONIA-N				
TNT	<0.02	1,1,1-TRICHLOROETHANE		
RDX	<0.02	TRICHLOROETHYLENE		
HMX	<0.02	D-N-BUTYL PHTHALATE		
PCB		BIS(2-ETHYLHEXYL)PHTHALATE		

SUBMITTED BY _____

SAMPLE ANALYSIS RESULTS
****

NAVWPNSUPPCEN, BLDG 2516
CRANE, INDIANA 47522
ATTN: JO BELCHER

ANACON# 7002
DATE 9-15-89

SAMPLE DESCRIPTION: 6-20 7-18-89

ALL RESULTS ARE IN MG/L

TEST RESULTS:

pH		7.1		
SP.COND,UM/CM		456		
TOC		2		
TOX		0.157		
FE	<0.05	AS	<0.05	ENDRIN
MN	<0.01	BA	<0.01	LINDANE
NA		CD	<0.01	METHOXYCHLOR
CA		CR	<0.05	TOXAPHENE
MG		PB	<0.05	2,4-D
K		HG	<0.002	2,4,5-TP
SULFATE	13	SE	<0.01	RADIUM,pCi/L
CHLORIDE	15	AG	<0.05	GROSS a,pCi/L
PHENOL	<0.05	FLUORIDE		GROSS b,pCi/L
BICARBONATE		NITRATE-N		COLIFORM
AMMONIA-N				
TNT	<0.02	1,1,1-TRICHLOROETHANE		
RDX	<0.02	TRICHLOROETHYLENE		
HMX	<0.02	D-N-BUTYL PHTHALATE		
PCB		BIS(2-ETHYLHEXYL)PHTHALATE		

SUBMITTED BY _____

SAMPLE ANALYSIS RESULTS
****

NAVWPNSUPPCEN, BLDG 2516
CRANE, INDIANA 47522
ATTN: JO BELCHER

ANACON# 7002
DATE 9-15-89

SAMPLE DESCRIPTION: 6-21 7-18-89

ALL RESULTS ARE IN MG/L

TEST RESULTS:

pH		7.0		
SP.COND,UM/CM		1302		
TOC		3		
TOX		0.010		
FE	<0.05	AS	<0.05	ENDRIN
MN	<0.015	BA	<0.01	LINDANE
NA		CD	<0.01	METHOXYCHLOR
CA		CR	<0.05	TOXAPHENE
MG		PB	<0.05	2,4-D
K		HG	<0.002	2,4,5-TP
SULFATE		SE	<0.01	RADIUM,pCi/L
CHLORIDE	16	AG	<0.05	GROSS a,pCi/L
PHENOL	<0.05	FLUORIDE		GROSS b,pCi/L
BICARBONATE		NITRATE-N		COLIFORM
AMMONIA-N				
TNT	<0.02	1,1,1-TRICHLOROETHANE		
RDX	<0.02	TRICHLOROETHYLENE		
HMX	<0.02	D-N-BUTYL PHTHALATE		
PCB		BIS(2-ETHYLHEXYL)PHTHALATE		

SUBMITTED BY _____

SAMPLE ANALYSIS RESULTS
****

NAVWPNSUPPCEN, BLDG 2516
CRANE, INDIANA 47522
ATTN: JO BELCHER

ANACON# 7002
DATE 9-15-89

SAMPLE DESCRIPTION: 6-22 7-18-89

ALL RESULTS ARE IN MG/L

TEST RESULTS:

pH		7.3		
SP.COND,UM/CM		407		
TOC		2		
TOX		0.010		
FE	<0.05	AS	<0.05	ENDRIN
MN	0.016	BA	0.023	LINDANE
NA		CD	<0.01	METHOXYCHLOR
CA		CR	<0.05	TOXAPHENE
MG		PB	<0.05	2,4-D
K		HG	<0.002	2,4,5-TP
SULFATE	8	SE	<0.01	RADIUM,pCi/L
CHLORIDE	12	AG	<0.05	GROSS a,pCi/L
PHENOL	<0.05	FLUORIDE		GROSS b,pCi/L
BICARBONATE		NITRATE-N		COLIFORM
AMMONIA-N				
TNT	<0.02	1,1,1-TRICHLOROETHANE		
RDX	<0.02	TRICHLOROETHYLENE		
HMX	<0.02	D-N-BUTYL PHTHALATE		
PCB		BIS(2-ETHYLHEXYL)PHTHALATE		

SUBMITTED BY _____

SAMPLE ANALYSIS RESULTS
****

NAVWPNSUPPCEN, BLDG 2516
CRANE, INDIANA 47522
ATTN: JO BELCHER

ANACON# 7002
DATE 9-15-89

SAMPLE DESCRIPTION: 6-23 7-18-89

ALL RESULTS ARE IN MG/L

TEST RESULTS:

pH				
SP.COND,UM/CM		164		
TOC		7		
TOX		0.236		
FE	0.11	AS	<0.05	ENDRIN
MN	0.61	BA	0.021	LINDANE
NA		CD	<0.01	METHOXYCHLOR
CA		CR	<0.05	TOXAPHENE
MG		PB	<0.05	2,4-D
K		HG	<0.002	2,4,5-TP
SULFATE	14	SE	<0.01	RADIUM,pCi/L
CHLORIDE	13	AG	<0.05	GROSS a,pCi/L
PHENOL	<0.05	FLUORIDE		GROSS b,pCi/L
BICARBONATE		NITRATE-N		COLIFORM
AMMONIA-N				
TNT	<0.02	1,1,1-TRICHLOROETHANE		
RDX	<0.02	TRICHLOROETHYLENE		
HMX	<0.02	D-N-BUTYL PHTHALATE		
PCB		BIS(2-ETHYLHEXYL)PHTHALATE		

SUBMITTED BY _____