PILOT SCALE OPERATIONAL PLAN FOR SOILS BIOREMEDIATION FACILITY

NSWC CRANE
Crane, Indiana

CONTRACT #N62467-93-D-1106
DELIVERY ORDER #0009
STATEMENT OF WORK #007

Revision **5**
June 6, 1997

Prepared for:

SOUTHERN DIVISION
NAVAL FACILITIES ENGINEERING COMMAND
2155 EAGLE DRIVE
P.O. BOX 190010
NORTH CHARLESTON, SOUTH CAROLINA 29419-9010

Prepared by:

MORRISON KNUDSEN CORPORATION
2420 Mall Drive
Corporate Square 1 - Suite 211
North Charleston, South Carolina 29406

UNITED STATES ENVIRONMENTAL PROTECTION AGENCY
REGION 5
77 WEST JACKSON BOULEVARD
CHICAGO, IL 60604-3590

REPLY TO THE ATTENTION OF: DRP-8J

June 13, 1997

Electronically and Hand Delivered

Mr. Jim Hunsicker, Director
Environmental Protection Department
Department of the Navy
Crane Division
Naval Surface Warfare Center
300 Highway 361
Crane, Indiana 47522-5000

RE: Operational Plan and QAPP
Bioremediation Facility
Naval Surface Warfare Center
Crane, Indiana
IN5 170 023 498

Dear Mr. Hunsicker:

The United States Environmental Protection Agency (U.S. EPA) hereby approves with modifications the final Pilot Scale Operational Plan and the final Quality Assurance Project Plan (QAPP) for the Bioremediation Facility. Enclosed is a final electronic and paper version of each of these documents. The U.S. EPA's modifications strikeout what is no longer applicable, and bolds and/or underlines text that was added. Please be aware that we expect the following from the U.S. Navy:

1. There must be compliance with this specific plan. If changes are anticipated or needed, they must be sent in writing to this office. The Contractor is not given any permission to deviate from the plan without both U.S. EPA and U.S. Navy approval. There are certain areas such as performance criteria in daily monitoring of the windrows that will require the Contractor's judgement. Documentation must support those actions.

2. The U.S. EPA must be notified verbally of the progress of the project on a weekly basis. We are requesting a three day notice prior to clean soil testing, and a two week notice prior to contaminated soil testing. Daily performance monitoring records shall be faxed by the next day.

3. The U.S. EPA Region 5 Office in conjunction with the Region 10 office will be on-site to take split samples on Day 0 of the contaminated soil portion of the test.

Recycled/Recyclable·Printed with Vegetable Oil Based Inks on 100% Recycled Paper (40% Postconsumer)

4. The U.S. Navy and the U.S. EPA must meet to discuss the clean soil testing results prior to beginning the contaminated soil testing.

5. Any explosive hazard analysis modifications to equipment or the operations must be in place prior to the contaminated soil testing. Any changes in the approved plan in order to allow for explosives safety must be submitted as an amendment request.

6. The U.S. EPA plans to perform a field inspection with record auditing sometime during the pilot scale test. This may be an announced or a surprise inspection.

7. We would encourage good photo documentation and video of the entire process to support the program.

8. The U.S. EPA believes that the yucca plants growing in the higher contaminated soil areas of Mine Fill A may provide some potential future research in phytoremediation technologies. We are asking that the U.S. Navy transplant these plants with some soil still surrounding the roots and maintain them until we can work on a joint effort into this research. We will begin discussing this with our Office of Research and Development in July.

Our Agency is happy to see the finalization and approval of these plans. We hope that the Pilot Scale Test will be a success. If you have any questions regarding this matter, or have any questions during testing, please contact me at (312) 886-6146.

Sincerely,

Carol Witt-Smith
Corrective Action Expert
WMB, IL/IN/MI Section

cc:

Tom Linson, IDEM
John Manley, IDEM
Chris Freeman, NSWC
Captain Carney, NSWC
Commander Smith, NSWC
Don Miller, MK
Dave Beall, MK at NSWC
Adrienne Wilson, SOUTHDIV
ACOE Waterways Experiment Station

PILOT SCALE
OPERATIONAL PLAN

INTERIM MEASURES CLEANUP
AT
SOILS BIOREMEDIATION FACILITY

NSWC CRANE
Crane, Indiana

Revision 5
June 6, 1997

CONTRACT N62467-93-D-1106
DELIVERY ORDER #0009
STATEMENT OF WORK #007

Prepared by:

MORRISON KNUDSEN CORPORATION
2420 MALL DRIVE
CORPORATE SQUARE 1 - SUITE 211
NORTH CHARLESTON, SOUTH CAROLINA 29406

PREPARED/APPROVED BY:

Don J. Miller
MK Project Engineer

Date

APPROVALS:

Robert E. Hlavacek
MK Program Manager

17 June 97
Date

CLIENT ACCEPTANCE:

U. S. Navy Responsible Authority

9 JUL 97
Date

CDR, CEC, USN
NSWC Crane Public Works Officer

7/17/97
Date

U.S. EPA ACCEPTANCE:

U.S. EPA Region 5 **RCRA** Project Coordinator

6/13/97
Date

PILOT SCALE
OPERATIONAL PLAN

INTERIM MEASURES CLEANUP
AT
SOILS BIOREMEDIATION FACILITY

NSWC CRANE
Crane, Indiana

Revision 5
June 6, 1997

CONTRACT N62467-93-D-1106
DELIVERY ORDER #0009
STATEMENT OF WORK #007

Prepared by:

MORRISON KNUDSEN CORPORATION
2420 MALL DRIVE
CORPORATE SQUARE 1 - SUITE 211
NORTH CHARLESTON, SOUTH CAROLINA 29406

PREPARED/APPROVED BY:

Don J. Miller — Date
MK Project Engineer

APPROVALS:

Robert E. Hlavacek — Date
MK Program Manager

CLIENT ACCEPTANCE:

U. S. Navy Responsible Authority — Date

NSWC Crane Public Works Officer — Date

U.S. EPA ACCEPTANCE:

U.S. EPA Region 5 **RCRA** Project Coordinator — Date

TABLE OF CONTENTS

SECTION		PAGE
1.0	INTRODUCTION	1-1
1.1	PURPOSE	1-1
1.2	PRIMARY OBJECTIVES	1-2
1.2.1	Performance Goals	1-6
1.2.2	Process Goals	1-7
1.3	BACKGROUND	1-7
1.4	BENCH-SCALE TREATABILITY RESULTS	1-11
1.4.1	Phase I	1-11
1.4.2	Phase II	1-11
1.4.3	Phase III	1-12
2.0	REGULATORY COMPLIANCE	2-1
2.1	CONTAMINATED MEDIA CLASSIFICATION	2-1
2.2	STORM WATER DISCHARGE	2-1
2.3	LANDFILL PERMITTING	2-2
2.4	EXCAVATION PERMITTING	2-2
2.5	SPECIFICATIONS, CODES, AND STANDARDS	2-2
3.0	PROJECT ORGANIZATION	3-1
4.0	SCHEDULE	4-1
5.0	BIOREMEDIATION FACILITY DESCRIPTION	5-1
5.1	COMPOST BUILDING AREA	5-1
5.2	AMENDMENT STORAGE AREA	5-1
5.3	AMENDMENT HAUL ROAD AREA	5-2
5.4	EQUIPMENT AND PERSONNEL DECONTAMINATION AREA	5-2
5.5	OFFICE AND LABORATORY TRAILER AREA	5-2
5.6	STORM WATER DIVERSION AND RETENTION CONTROLS	5-3
6.0	PILOT SCALE OPERATION	6-1
6.1	RECIPE SELECTION	6-1
6.2	SOIL EXCAVATION, SCREENING, AND SITE RESTORATION	6-3
6.2.1	Soil Excavation	6-3
6.2.2	Soil Screening	6-5
6.2.3	Backfilling and Site Restoration	6-7
6.3	AMENDMENT SUPPLY AND STORAGE	6-7
6.4	LOAD AMENDMENTS INTO GRINDER/MIXER	6-8
6.5	LOAD AMENDMENT BLEND INTO WINDROW	6-8
6.6	LOAD SOIL INTO WINDROW	6-11

TABLE OF CONTENTS (continued)

SECTION **PAGE**

6.7 TURN/MIX WINDROW 6-12
6.8 LANDFILL PERMITTING 6-13
6.9 UNLOAD WINDROW AND TRANSPORT FOR DISPOSAL 6-13

7.0 AUXILIARY SYSTEMS DESCRIPTION 7-1
7.1 ANALYTICAL SERVICES 7-1
7.1.1 Field Screening Services 7-1
7.1.2 Analytical Laboratory Services 7-1
7.2 DECONTAMINATION 7-2
7.2.1 Excavation Site Equipment and Rock Washing 7-2
7.2.2 Biofacility Truck and Equipment Washing 7-3
7.2.3 Personnel Decontamination Shower Trailer 7-3
7.3 WATER/FLUID COLLECTION AND DISPOSITION 7-3
7.3.1 Compost Building Sump Water 7-3
7.3.2 Truck and Equipment Decontamination Water 7-4
7.3.3 Storm water Diversion and Retention Pond Water 7-4

8.0 PROCESS PARAMETERS AND MONITORING 8-1
8.1 PROCESS PARAMETERS 8-1
8.2 PROCESS MONITORING 8-1
8.2.1 Temperature Monitoring 8-3
8.2.2 Moisture Level Monitoring 8-4
8.2.3 pH Level Monitoring 8-5
8.2.4 Total Organic Carbon Level Monitoring 8-6
8.2.5 Nitrogen Level Monitoring 8-6
8.2.6 Oxygen Level Monitoring 8-6
8.2.7 Explosives Level Monitoring 8-7
8.2.8 Metal Contaminants Monitoring 8-8
8.2.9 Air Monitoring 8-8

9.0 SAMPLING AND ANALYSIS 9-1
9.1 COMPOST WINDROW SAMPLING 9-1
9.2 FLUID COLLECTION SYSTEMS SAMPLING 9-1
9.3 PRE-EXCAVATION SITE SAMPLING 9-1
9.3.1 Sampling Areas 9-3
9.3.2 Soil Sampling 9-3
9.3.3 Marking Grid Blocks for Excavation 9-3

TABLE OF CONTENTS (continued)

SECTION **PAGE**

10.0 OPERATING EQUIPMENT DESCRIPTIONS 10-1

11.0 QUALITY CONTROL 11-1

12.0 WASTE MANAGEMENT 12-1

13.0 ENVIRONMENTAL PROTECTION 13-1
13.1 INTRODUCTION 13-1
13.2 MEASURES FOR PROTECTING NATURAL RESOURCES 13-1
13.2.1 Dust Control. 13-
13.2.2 Erosion and Sediment Control. 13-

14.0 RECORDS AND RECORDING 14-1

15.0 SITE SAFETY, HEALTH, EMERGENCY RESPONSE AND CONTINGENCY PLAN 15-1

TABLE OF CONTENTS (continued)

SECTION **PAGE**

15.1 SITE SAFETY AND HEALTH PLAN 15-1
15.2 AIR MONITORING 15-1
15.3 AIR SAMPLING 15-2
15.4 NOISE MONITORING 15-3

16.0 DEMOBILIZATION 16-1
16.1 EQUIPMENT 16-1
16.2 PROJECT FACILITIES 16-1

17.0 REFERENCES 17-1

LIST OF TABLES

TABLE		PAGE
1-1	REMEDIAL PERFORMANCE GOALS AND ACCEPTABLE REPORTING LIMITS	1-3
1-2	PROCESS GOALS	1-7
1-3	SUMMARY OF PREVIOUS SOIL BORING RESULTS - MINE FILL A	1-9
1-4	MIX #7 BENCH-SCALE TEST RESULTS	1-13
3-1	PROJECT RESPONSIBILITIES	3-3
6-1	PILOT SCALE WINDROW RECIPES **(MIXES 1- 6)**	6-2
6-1a	**PILOT SCALE WINDROW RECIPES (MIX 7)**	
8-1	NON-CONTAMINANT PROCESS PARAMETERS	8-3
8-2	EXPLOSIVES PROCESS	8-7
9-1	SAMPLING AND ANALYSIS SCHEDULE	9-2
10-1	OPERATING EQUIPMENT	10-1

LIST OF FIGURES

FIGURE		PAGE
1-1	SWMU 12/14, MINE FILL A	1-8
1-2	SWMU 12/14, MINE FILL A SAMPLE LOCATIONS	1-10
4-1	PILOT SCALE OPERATION SCHEDULE	4-2
6-1	SOIL EXCAVATION AREA	6-4
6-2	TRANSPORTATION ROUTE FROM MINE FILL A TO BIOFACILITY	6-6
6-3	WINDROW FORMATION DIMENSIONS	6-9
6-4	SOIL LOADING	6-10
8-1	DECISION FLOW CHART	8-2

APPENDICES

APPENDIX		PAGE
A	PILOT SCALE SITE SAFETY AND HEALTH PLAN	A-1
B	PHOTOGRAPHS	B-1
C	BIOREMEDIATION FACILITY DRAWINGS	C-1
D	STANDARD OPERATING PROCEDURES	D-1
E	SOIL EXCAVATION PLAN	E-1
F	SUPPLEMENT TO QAPP	F-1
G	QC CHECKLISTS AND LOGS	G-1
H	QUALITY CONTROL PLAN	H-1

1.0
INTRODUCTION

The Naval Surface Warfare Center (NSWC) Crane, located in southwestern Indiana, provides support for equipment, shipboard weapons systems, and ordnance. In addition, NSWC supports the Crane Army Ammunition Activity including production and renovation of conventional ammunition, storage, shipment, and demilitarization and disposal of conventional ammunition.

The Department of Defense (DOD) has utilized bioremediation, or composting, to treat explosives contaminated soil since 1982. Bioremediation has proven to be successful at other sites having explosive contaminated materials (Weston, 1993). Explosive contaminants in soils and sludges that have been successfully degraded by composting include: TNT, RDX, HMX, Tetryl, and nitrocellulose (U.S. EPA, 1993a, 1993b). The preferred treatment alternative for explosive contaminated soils from the Ammunition Burning Ground (ABG), Rockeye, Mine Fill A, and Mine Fill B Solid Waste Management Units at NSWC Crane is on-site bioremediation. Bioremediation of contaminated soil is preferred due to its ability to treat material on-site with limited transportation, lower costs, and high treatment efficiency.

The first phase of the bioremediation interim measures process will consist of a pilot scale operation. This will be followed by the second phase, full scale operation upon success of pilot scale testing. This plan discusses only the first phase of operation, the pilot scale operation.

1.1 PURPOSE

The purpose of this operational plan is two-fold, 1) provide operational guidance, parameters, target goals, and safety considerations for a pilot scale operation and 2) institute a successful operation which, in turn, would provide lessons learned and cleanup goals for a full scale operation. This plan may be modified, amended, or revised, with the approval of the United States (U.S.) Navy and the **United States Environmental Protection Agency (**U.S. EPA**)**, to optimize system performance throughout the pilot scale program. The following documents are provided for the Soils Bioremediation Project and will be used in conjunction with each other:

1. The approved *Quality Assurance Project Plan (QAPP) For Pilot Scale Operations at the Soils Bioremediation Facility,* which addresses the quality assurance, sampling and analytical requirements of the bioremediation pilot scale operation.

2. The approved *Pilot Scale Operational Plan For Soils Bioremediation Facility*, which addresses the descriptions and requirements for operating the pilot scale bioremediation facility.

3. The approved *Pilot Scale Site Safety and Health Plan* (SSHP), which is Appendix A to the Pilot Scale Operational Plan For Soils Bioremediation Facility and addresses the life cycle safety and health management, emergency preparedness and prevention, contingency planning, and emergency procedures. **And**,

4. The approved *Soil Erosion Control Plan for Bioremediation Facility,* which addresses the erosion and sediment control measures for the Bioremediation Facility construction.

The pilot scale operation is designed to verify scale-up factors, treatment performance and operating parameters from the bench scale treatability study performed by the **U.S.** Army Corps of Engineers, Waterways Experiment Station (WES). In addition to the WES recommendations, other manure (chicken), bulking agents and amendments (straw, corn stalks, and wood chips), and higher soil loadings will be used for operational performance enhancement. The successful data provided by the pilot scale operation will be used, in conjunction with the risk assessment values generated for NSWC Crane, to establish practical explosive contaminated soil cleanup goals for the full scale operation.

SWMU 12/14, Mine Fill A, has been selected as the source of contaminated soil for the pilot scale operation. This area has been selected due to its high concentrations of RDX, TNT, and concentrations of other explosives as described in Section 1.3 as well as its uninhibited access without impact of ongoing facility activities.

1.2 PRIMARY OBJECTIVES

The objective of pilot scale testing at the Bioremediation Facility is to reduce, through composting, the explosive contaminant levels of affected soils to below health-based remediation goals and to meet the National Contingency Plan (NCP) criteria of 90% to 99% reduction of toxicity and mobility (leachability). Pilot scale results will also be compared to risk assessment values generated for NSWC Crane. The successful pilot scale mixes shall be used to determine the full scale treatment operations.

Preliminary Remedial Goals (PRGs) developed by Region 9 (U.S. EPA, 1996a) will be used as initial cleanup level targets for the pilot scale phase. Method reporting limits for each of the target constituents are provided by Southwest Laboratory of Oklahoma. The constituents of concern and remedial goals are shown in Table 1-1.

TABLE 1-1 REMEDIAL PERFORMANCE GOALS AND ACCEPTABLE REPORTING LIMITS - Pilot Scale Study				
Parameter	**Method of Analysis**	**Soil goal-industrial limit (mg/kg) or TCLP regulatory limit**	**Soil Acceptable Reporting Limit (mg/kg)**	**Water Acceptable Reporting Limit (ug/L) (for blank analysis only)**
Explosives				
TNT	8330	30f	0.25	6.4
RDX	8330	30f	1	14.0
HMX	8330	34,000a	2.2	13.0
Tetryl	8330	6,800a	0.65	10.0
TNB	8330	34b	0.25	7.3
1,3-DNB	8330	68a, f	0.25	4.0
Nitrobenzene (NB)	8330	94a	0.26	7.0
4-Am-DNT	8330	2.8c	0.25	20
2-Am-DNT	8330	2.8c	0.25	14
2,4-DNT	8330	2.8c	0.25	5.7
2,6-DNT	8330	2.8c	0.26	9.4
2-nitrotoluene	8330	6,800d	0.25	12.0
3-nitrotoluene	8330	6,800d	0.25	7.9
4-nitrotoluene	8330	6,800d	0.25	8.0
Total Metals (site-specific)				
Barium	6010	100,000a	0.5	5
Cadmium	6010	850a	0.4	4
Chromium (total)	6010	450a	0.5	5
Lead	6010	1,000a	0.3	3

TABLE 1-1 REMEDIAL PERFORMANCE GOALS AND ACCEPTABLE REPORTING LIMITS - Pilot Scale Study				
Parameter	**Method of Analysis**	**Soil goal-industrial limit (mg/kg) or TCLP regulatory limit**	**Soil Acceptable Reporting Limit (mg/kg)**	**Water Acceptable Reporting Limit (ug/L) (for blank analysis only)**
TCLP-metals (units: mg/L)				
Arsenic	1311, 6010	5.0 mg/L	N/A	100
Barium	1311, 6010	100	N/A	5
Cadmium	1311, 6010	1.0	N/A	5
Chromium	1311, 6010	5.0	N/A	5
Lead	1311, 6010	5.0	N/A	40
Mercury	1311, 7470	0.2	N/A	1.5
Selenium	1311, 6010	1.0	N/A	100
Silver	1311, 6010	5.0	N/A	5
Volatile Organics (the following compounds were listed in Table 5-7 of the August 1992 EMR for Mine Fill A)				
Dichloro-methane (methylene chloride)	8240	18a	5	5
Acetone	8240	8,800a	10	10
Methyl ethyl ketone	8240	27,000a	10	10
Methyl isobutyl ketone	8240	2,800a	10	10
Toluene	8240	880a	5	5
Xylene (total)	8240	320a	5	5
Ethanol	8015	NV	4	2,000
Isopropanol	8015	NV	4	2,000

TABLE 1-1
REMEDIAL PERFORMANCE GOALS AND ACCEPTABLE REPORTING LIMITS
- Pilot Scale Study

Parameter	Method of Analysis	Soil goal-industrial limit (mg/kg) or TCLP regulatory limit	Soil Acceptable Reporting Limit (mg/kg)	Water Acceptable Reporting Limit (ug/L) (for blank analysis only)
Methanol	8015	100,000a	4	2,000
Naphtha	8015	nv	25	2,000
TCLP-VOCs (regulated list) units: mg/L				
Benzene	8240	0.5	N/A	5
Carbon Tetrachloride	8240	0.5	N/A	5
Chlorobenzene	8240	100.0	N/A	5
Chloroform	8240	6.0	N/A	5
1,2-Dichloroethane	8240	0.5	N/A	5
1,1-Dichloroethene	8240	0.7	N/A	5
Methyl Ethyl Ketone	8240	200.0	N/A	10
Tetrachloro-ethylene	8240	0.7	N/A	5
Tetrachloro-ethene	8240	0.5	N/A	5
Vinyl Chloride	8240	0.2	N/A	10

Notes:

1. Analytical methods listed above are SW-846 methods, unless otherwise indicated.
2. All other parameters not listed here will be reported at standard PQLs (i.e. TOC, TKN, other VOCs, other explosives, disposal parameters)
3. Parameter lists required to be reported per method per data collection task are provided in Table 1-5.
4. N/V = no value available
5. N/A = not applicable

a. Reference: EPA Region 9 Preliminary Remediation Goals, August 1, 1996
b. Value for 1,3,5-Trinitrobenzene
c. Value for dinitrotoluene mixture (see reference a).
d. Value for 2-and 3-nitrotoluene.
e. These reporting limits will be confirmed with the laboratory.
f. Target parameter presumes collection of 3 isomers and applies most conservative available industrial PRG value to non resolved isomers.

A performance goal of 30 mg/kg for TNT and RDX will be used during the pilot scale as opposed to the industrial soil PRGs of 64 mg/kg and 17 mg/kg, respectively, and the residential soil PRGs of 15 mg/kg and 4 mg/kg, respectively. This level has been applied at Comprehensive Environmental Response, Compensation, and Liability Act (CERCLA) sites to minimize the phytotoxicity effects of munitions compounds on plant species (U.S. EPA, 1996b). This criteria is especially applicable to areas which may be backfilled with treated soil and revegetated. The PRG established for soil cleanup at the Bangor facility was set at 30 mg/kg for TNT, as this level corresponded to "lifetime excess cancer risks between 10E-5 and 10E-6 under CERCLA and is protective for non-carcinogenic effects" (U.S. EPA, 1993c). Other constituents' goals have been reduced from the PRG level such as 2,4 and 2,6 DNT based on previous studies (U.S. EPA, 1996c). The rate of degradation for all constituents listed will be evaluated, and process and site specific performance goals developed for use in full scale operation using the successful pilot scale mix results.

1.2.1 Performance Goals

The site specific performance goals will be used as the primary remediation goals for the constituents of concern during the pilot scale operation, however, a secondary goal will be to provide data to evaluate the biological treatment efficiency based on the CERCLA remediation criteria for innovative treatment technologies.

The constituents of concern and performance goals are shown in Table 1-1. The performance goals are discussed in more detail in Section 1.4 of the **approved** Pilot Scale Biofacility QAPP.

The ~~National Contingency Plan (~~NCP~~)~~ Preamble indicates 90% to 99% reduction of toxicity and mobility (leachability) as a guide for effective treatment. Previous studies have indicated that reductions in parent compounds and first series intermediate compounds were providing parallel reductions in toxicity and leachability based on combined chemical, toxicology and leachability data (U.S. EPA, 1996b). Therefore, a 90% to 99% reduction in concentrations of contaminant compounds corresponds to a 90% to 99% reduction in toxicity and leachability and meets the NCP treatment performance guideline for composting of TNT, RDX, and HMX.

1.2.2 Process Goals

The process parameters and their goals essential to successful biodegradation of the explosive contaminants are listed in Table 1-2. These parameters will be measured and monitored as described in Section 8.2 of this Operational Plan. It is essential that these goals are met to provide optimal conditions for successful degradation of the explosive contaminants and, therefore, meeting the performance goals of this plan. The process parameters and their goals are discussed in more detail in Section 8.0.

TABLE 1-2 PROCESS GOALS	
Process Parameter	Operating Goal
Temperature	25 to 60 °C
Moisture	40 to 60 % (MWHC)[1]
Oxygen	5 to 20 %
[1] Denotes Maximum Water Holding Capacity	

If Contractor personnel and equipment are available during the Pilot Scale Operation, thermophilic bacteria testing shall be performed. The procedure is described in Appendix D, Field SOP 12.0 of this plan. If personnel and equipment are not available in a timely manner, or additional funding is not available, this test will be delayed until the full scale operation instead.

1.3 BACKGROUND

Mine Fill A Soil. Mine Fill A is located in the west-central portion of NSWC situated along Highway H-17 as shown in Figure 1-1. Mine Fill A consists of 29 buildings which have been used to assemble mines, depth charges, rocket heads, aerial bombs, and projectiles. Currently, Mine Fill A is used to produce 2,000-pound aerial bombs. Demilitarization activities also take place in this area. The major sources of contamination were wash down operations and the exhaust ventilation system.

Soil contaminants include TNT, RDX, and HMX. Concentrations of individual constituents in the soil ranged from nondetect to 15,300 mg/kg (RDX). TNT and HMX were reported as high as 3,790 mg/kg and 1,340 mg/kg respectively. Soil samples were collected in 1985 around Buildings 153 and 158 with the highest concentrations of contaminants detected near Building 153 (Haliburton, 1992). The sample locations are depicted in Figure 1-2 with the analytical results shown in Table 1-3. Other sampling events indicated contaminants of concern in operational waste waters which are presently collected and pretreated prior to discharge to the site wastewater treatment system.

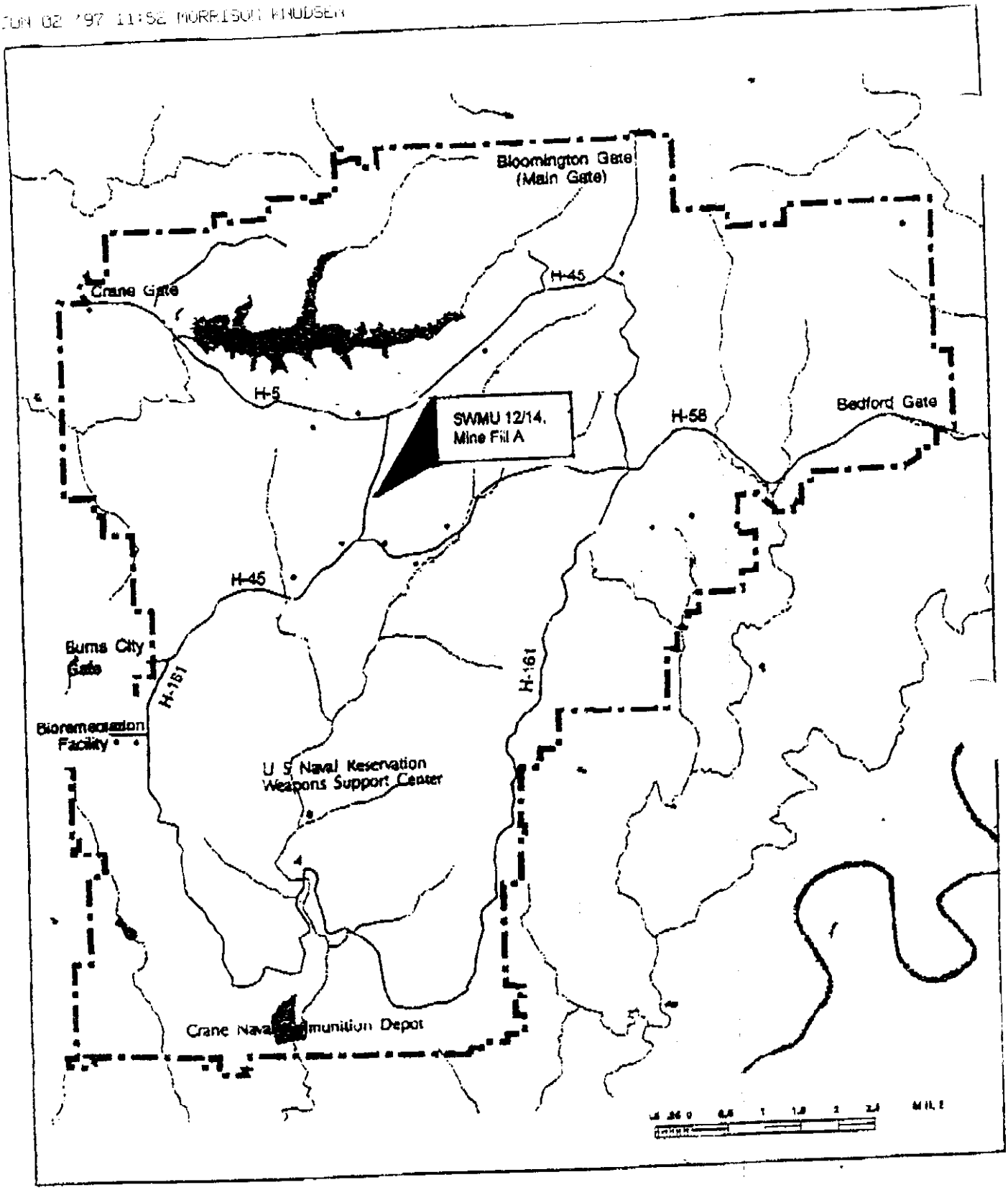

FIGURE 1-1
SWMU 12/14, MINE FILL A

TABLE 1-3 SUMMARY OF PREVIOUS SOIL BORING RESULTS - MINE FILL A			
Sample I.D./Location	**TNT (ppm)**	**HMX (ppm)**	**RDX (ppm)**
MFA-1/45 feet away from northeast corner of box bin at building 153	69	292	2,620
MFA-2/at base of berm 10 feet south of box bin	3,790	1,340	15,300
MFA-3/10 feet out from end of drain pipe	8	908	8,150
MFA-4/10 feet down ditch from MFA-3	<3.6	64	374
MFA-5/28 feet east of building 158, in ditch	64	99	906
MFA-7/two feet southeast of static pole south of building 158, in run-off ditch	<3.6	<5.0	<7.2
MFA-8/near base of berm, 15 feet west of corner of box bin	5.2	52	349

Notes:
1. Soil samples were collected from borings installed 20" below ground surface. Samples were analyzed for TNT, RDX and HMX. Reference for data and locations found on Figure 1-5 is *Final RCRA Facility Investigation Phase I, Environmental Monitoring Report, Solid Waste Management Units #19/00, #08/17, #12/14 and #13/14, Naval Surface Warfare Center, Crane Division, Crane, Indiana, Halliburton NUS (August 1992).*

Based on previous sampling data and locations, the area around Building 153 has been selected as the excavation site for the pilot scale operation. Building 158 soils will be used as an additional source in case sufficient soil is not available near Building 153. Aerial and ground photographs are provided in Appendix B for additional detail of the site.

An estimated 200 cubic yards of explosive contaminated soil will be excavated at the Mine Fill A area and transported to the Bioremediation Facility for pilot scale compost testing.

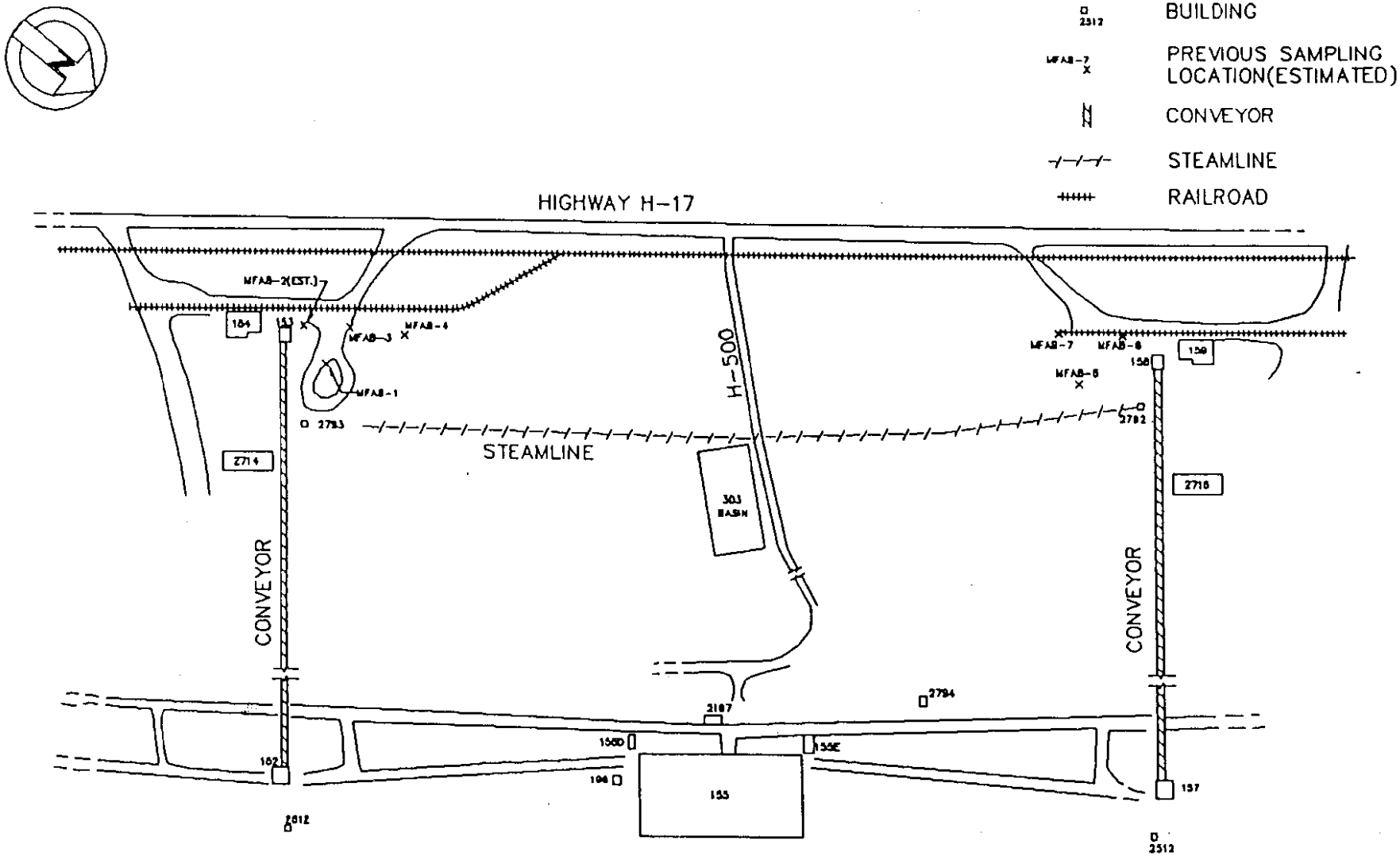

SWMU #12/14, MINE FILL A SAMPLE LOCATIONS

(NOT TO SCALE)

MORRISON KNUDSEN CORP	
Drawing Figure 1-2	Rev
Date 10/21/96	Sh.

1.4 BENCH-SCALE TREATABILITY RESULTS

Bench-scale treatability testing on soil samples from ABG and Rockeye Munitions was performed by U.S. Army Corps of Engineers Waterways Experiment Station (WES). The following information was extracted from two In-Progress Review (IPR) memorandums issued by U.S. Army Waterways Experiment Station (WES) dated May 18, 1995, (Preston, 1995a) October 3, 1995, (Preston, 1995b) respectively, and from the final draft report *Bench Compost Implementation at Naval Surface Warfare Center Crane* undated (Preston, 1996). The results of this treatability study are, in part, the basis for the recipes and process parameter control points to be used in the pilot and full scale tests.

The NSWC Crane Bench Scale Compost Testing was organized into three phases: (I) initial planning and initiation, (II) respirometric testing, and (III) adiabatic bench scale testing.

1.4.1 Phase I

The activities for this phase included the initial planning and initiation of the project, collection of soil samples from the contaminated sites, discussion of the project with regulators, and a survey of locally available agriculture products.

1.4.2 Phase II

Eight compost mixtures were selected for examination using respirometric screening techniques as a method for initial screening. The goals of the experimentation were analogous to those outlined in *Guide for Conducting Treatability Studies Under CERCLA, Interim Guidance (EPA/540/R-93/519a)* for the remedy screening study tier. In this case, however, the specific objective was to use the data to suggest two compost mixes for larger scale bench examination that would confirm remedy screening and selection. The two final mixtures were 1) swine manure and paper waste and 2) alfalfa and cow manure.

1.4.3 Phase III

The swine manure and paper waste mixture was rejected due to poor consistency and mixing difficulty. The cow manure and alfalfa mixture (Mix #7) was composted within a reactor for 35 days with analysis results as indicated in Table 1-4.

TABLE 1-4 MIX #7 BENCH-SCALE TEST RESULTS			
Contaminant	Initial Concentration (mg/kg)	15-Day Concentration (mg/kg)	35-Day Concentration (mg/kg)
HMX	4,817	NR	4,658
RDX	192.83	<10.0	0.70[1]
TNT	179.67	<2.5	1.18[1]
2A-DNT	142.67	1.75	4.22
4A-DNT	209.5	14.6	12.39

1. Estimated. Actual concentration was below the calibration limit of the analytical equipment.
2. Initial concentrations of TNB, DNB, 2,6-DNT and 2,4-DNT were all below 2.6 mg/kg. Initial concentration of tetryl was below 6.5 mg/kg.
3. Reference for data: Bench Compost Implementation at Naval Surface Warfare Center Crane.(Preston, 1996)

Other operational information included:

- Mixture - 20% soil,
  40% cow manure, and
  40% alfalfa (by volume).
- Mixing - Daily.
- Moisture - 49.0% initially,
  47.2% on day 15, and
  44.9% on day 35.
- TVS - 30.0% at day 0,
  21.8% at day 15, and
  21.1% at day 35.
- TKN - Initial Total Kjeldahl Nitrogen value was 2327 mg/kg.
- C:N Ratio - Initial Carbon to Nitrogen ratio was 35.8:1.
- pH - ~~pH was~~ 6.73 initially,
  8.74 at day 15, and
  7.78 at day 35.

Analysis indicates reductions of 99.6%, 99.3%, 97.0% and 94.1% for RDX, TNT, 2A-DNT, and 4A-DNT, respectively. Note the increase in 2A-DNT from the 15 day concentration to the 35 day concentration. This is due to the generation of daughter products during the reduction/degradation of the parent compound. The transformation of daughter products as well as the primary compounds will be monitored throughout the pilot scale process as described in Section 8.0 of this plan. Only a 159 mg/kg reduction in HMX was observed; ~~however, the pilot scale program will utilize a variety of recipes in addition to the one recommended from the bench scale tests~~.

The U.S. Navy performed some clean soil compost pile testing and a Dewars Test to evaluate other mix recipes. Based on the results of these two programs, the final mixes selected and discussed in Section 8.0 were chosen. Table 1-5 lists the Dewar Recipes Tested. The pilot scale goals are discussed in Section 1.2 and contingency plans are discussed in Section 8.2.

TABLE 1-5
DEWAR RECIPES

Mix #	Amendment	Volume %	Volume in ounces	Volume in ml
1	Cow Manure	19.00	24	710
	Straw	56.00	72	2129
	Soil	25.00	32	946
2	Chicken Manure	3.20	4	118
	Straw	71.80	92	2721
	Soil	25.00	32	946
3	POTW Sludge	25.00	32	946
	Alfalfa	25.00	32	946
	Sawdust	12.50	16	473
	Wood Chips	12.50	16	473
	Soil	25.00	32	946
4	Chicken Manure	35.00	45	1331
	Wood Chips	40.00	51	1508
	Soil	25.00	32	946
5	Cow Manure	4.50	6	170
	Chicken Manure	1.00	1	38
	Straw	69.50	89	2631
	Soil	25.00	32	946

TABLE 1-5 CONTINUED
DEWAR RECIPES

Mix #	Amendment	Volume %	Volume in ounces	Volume in ml
6	Cow Manure	25.00	32	946
	Chicken Manure	15.00	19	568
	Wood Chips	35.00	45	1325
	Soil	25.00	32	946
7	Cow Manure	12.00	15	454
	Alfalfa	7.50	10	284
	Straw	48.00	61	1817
	Wood Chips	7.50	10	284
	Soil	25.00	32	946
8	Cow Manure	25.00	32	946
	Alfalfa	25.00	32	946
	Wood Chips	25.00	32	946
	Soil	25.00	32	946
9	Turkey Manure	25.00	32	946
	Alfalfa	25.00	32	946
	Wood Chips	25.00	32	946
	Soil	25.00	32	946

TABLE 1-5 CONTINUED
DEWAR RECIPES

Mix #	Amendment	Volume %	Volume in ounces	Volume in ml
10	Cow manure	22.50	29	858
	Chicken Manure	3.25	4	118
	Potato Waste	10.75	14	414
	Alfalfa	19.25	24.5	725
	Sawdust	19.25	24.5	725
	Soil	25.00	32	946
11	Cow Manure	25.00	32	946
	Straw	15.00	19	568
	Wood Chips	35.00	45	1325
	Soil	25.00	32	946
12	Turkey Manure	25.00	32	946
	Straw	15.00	19	568
	Wood Chips	35.00	45	1325
	Soil	25.00	32	946
13	POTW Sludge	40.00	51	1514
	Wood Chips	17.50	22	662
	Sawdust	17.50	22	662
	Soil	25.00	32	946
14	Cow Manure	25.00	32	946
	Chicken Manure	15.00	19	568
	Wood Chips	35.00	45	1325
	Soil	25.00	32	946

2.0
REGULATORY COMPLIANCE

2.1 CONTAMINATED MEDIA CLASSIFICATION

On-site bio-treatment of contaminated media must comply with all relevant permitting and reporting requirements of the Resource Conservation and Recovery Act **(RCRA)** (1976 *et seq.*).

Data obtained from *in situ* samples of the Mine Fill A excavation areas indicate that the contaminated media does not contain 40 CFR 261 Appendix VIII hazardous constituents above the characteristic reactivity threshold as determined in 40 CFR 261.23. Kristoff (1987) evaluated contaminated media which contain reactive nitrated aromatics, and indicated that reactivity was not observable if the reactive constituents were present below 10 % (100,000 mg/kg) concentrations.

It is expected from in-situ soil analysis that once the soil is excavated and mixed within the truck, prior to treatment, the soil will be non-reactive and a non-hazardous waste. Upon treatment at the bioremediation facility, the hazardous constituents will be treated from the soil, and the material handled will be a contaminated media. Therefore, at treatment completion, it is anticipated that the material will be considered a soil again. If at any point during the remediation activity the generation of hazardous waste is anticipated, the activities will stop in that area being excavated and permits will be sought for the treatment of hazardous waste.

Based on this classification of the soil to be treated, the Bioremediation Facility and buildings have been designed and approved as a solid waste and contaminated media treatment facility meeting the applicable codes and standards.

2.2 STORM WATER DISCHARGE

The NSWC Crane personnel have obtained a storm water discharge permit, (NSWC, 1997) under 327 IAC 15; **National Pollution Discharge Elimination System (NPDES)** General Permit Rule Program, which amends the existing permit to include discharge levels for the Bioremediation Facility storm water collection system. MK will conduct operations in compliance with the permit specifications. The storm water diversion and retention controls for the Bioremediation Facility are described in Sections 5.6 and 7.3.3 of this plan. Additional details on sampling procedures and analytical methodologies for storm water discharge are provided in the Pilot Scale Biofacility QAPP, Section 4.3.

2.3 LANDFILL PERMITTING

An application for a Minor Modification to the existing landfill permit will be submitted by NSWC Crane personnel to **the Indiana Department of Environmental Management** (IDEM). This modification is required to obtain approval for using finished compost material as a landfill daily cover material. Analytical data from the successful pilot scale testing will provide the necessary data for these permits.

Any pile that fails to meet the performance goals will be retreated until the performance goals are met, prior to any application as a daily cover material. Successfully treated piles will be stored in the bioremediation facility buildings until the State landfill permitting is approved.

2.4 EXCAVATION PERMITTING

An Excavation and Trenching Permit is required for soil excavation in the Mine Fill A area and will include a statement of clearance for safe access based on the removal or absence of unexploded ordnance in the work zone. This permit will be obtained from the Public Works Officer and is valid for thirty days. Additional details on excavation permitting is provided in Section 6.2 of this plan.

2.5 SPECIFICATIONS, CODES, AND STANDARDS

Compliance in the design, material, examination, testing, inspection, certification, and documentation shall include, but not be limited to, the applicable portions of the specifications, codes, and standards listed below. References to codes, specifications, and standards shall be to the latest edition, complete with all addenda and revisions applicable on the date of the construction specification and approval of the Operational Plan and QAPP.

- U.S. Navy or NSWC Crane guidance
- U.S. Occupational Safety and Health Administration

  29 CFR 1910, Occupational Safety and Health Standards

  29 CFR 1926, Safety and Health Regulations for Construction
- U.S. Army Corps of Engineers

  EM-385-1-1, Safety and Health Manual

- U.S. Environmental Protection Agency

  40 CFR 257, Criteria for Classification of Solid Waste Disposal Facilities and Practices

  40 CFR 261, Identification and Listing of Hazardous Waste

  40 CFR 262, Standards Applicable To Generators Of Hazardous Waste

  40 CFR 264, Subpart S Corrective Action

  40 CFR 300, National Oil and Hazardous Substance Contingency Plan

- U. S. Department of Transportation

  49 CFR 172, Hazardous Materials Table, Special Provisions, Hazardous Materials Communications, Emergency Response Information, and Training Requirements. This part describes requirements for completing shipping papers; marking, labeling, and placarding; training; and emergency response.

  49 CFR 173, General Requirements for Shipments and Packaging. This part describes classification and packaging of hazardous materials.

- Indiana Department of Environmental Management

  327 IAC 15, NPDES General Permit Rule Program

  329 IAC 2, Solid Waste Management

  329 IAC 3.1, Hazardous Waste Management Permit Program And Related Hazardous Waste Management.

- Department of Defense Environmental Safety Board explosive safety standard for construction equipment.

3.0
PROJECT ORGANIZATION

The project team organization for this remedial action is shown in Figure 3-1. The responsibilities of each team member are listed in Table 3-1.

The team is structured to provide the necessary operations personnel and scientific oversight in the execution of this work.

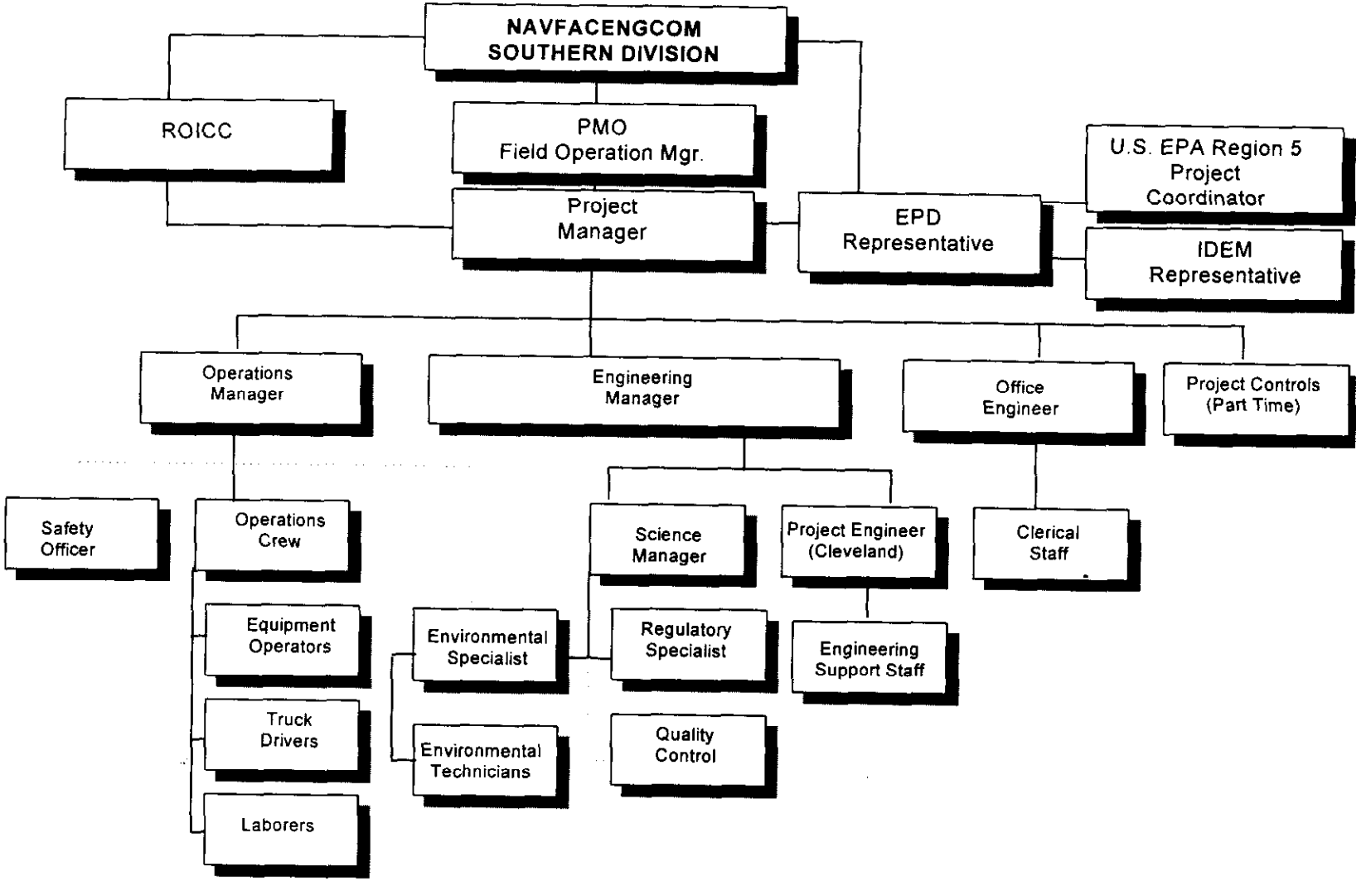

FIGURE 3-1
ORGANIZATION CHART

TABLE 3-1 PROJECT RESPONSIBILITIES	
TEAM MEMBERS	**RESPONSIBILITIES**
NAVFACENGCOM Southern Division Restoration Project Manager (RPM)	Overview of project execution and coordination between Contractor, NSWC Crane, U.S. EPA, and other agencies.
Program Management Office (PMO)	Overall responsibility for all cleanup measures at all sites in the Southern Division of the Naval Facilities Engineering Command under Contract No. N62467-93-D-1106. The PMO is the point of contact for Southern Division.
U.S. EPA Region 5 **RCRA** Project Coordinator (RPC)	Responsible for overview of all site activities to assure compliance with RCRA. RPC shall review and approve all phases of remedial activities including work plans, construction design, equipment, analytical results, etc..
NSWC Environmental Protection Department (EPD) Environmental Construction Representative (ECR)	Responsible for monitoring contractor performance for compliance with RCRA, the RCRA Corrective Action Part B Permit, and other environmental regulations as they apply to the approved Interim Measures Work Plans. In absence of NTR and in an environmental emergency, the ECR shall provide direction to Contractor and provide notification to appropriate parties.
NSWC Resident Officer In Charge of Construction (ROICC)	Southern Division's on-site representative and is the liaison between NSWC officials, the U.S. EPA, and the Project Manager for the SWMUs at NSWC Crane.
Project Manager (PM)	Reports to the Field Operations Manager from the PMO. Overall responsibility for implementing this Operational Plan and all other project activities. The PM will control all on-site forces to ensure completion of project tasks. • Single point of contact for U.S. Navy and U.S. EPA liaison. • Coordinates the project resources to ensure compliance with the appropriate plans, procedures, and regulatory requirements. • Oversees all personnel on-site and coordinates with the PMO. • Overall responsibility for cost, schedule control, safety, and quality.
Site Superintendent - Operations Manager (OM)	Reports to the PM and has primary responsibility for the coordination and control of all field activities to ensure that all tasks included in this Operational Plan are completed. • Coordinates the activities of all field operations personnel. • Provides daily reports to the PM on the status of field operation activities. • Responsible for equipment maintenance, procurement of amendments, and miscellaneous equipment rental. • Primary responsibility for production of the Bioremediation Facility and direct supervision of operators, drivers, laborers, and the ES.
Engineering Manager (EM)	Reports to the PM and has primary responsibility for finalizing the operations plans, provides construction support, and oversight of engineering and scientific activities. • Acts as the MK representative at the RAB presentations, • Acts as the MK site communications officer, • Provides technical direction to the engineering and science staff, • Provides oversight and coordination of the preparation of technical documents.

TABLE 3-1 PROJECT RESPONSIBILITIES	
TEAM MEMBERS	**RESPONSIBILITIES**
Science Manager (SM)	Reports to the EM and has primary responsibility for oversight of the science activities on site including regulatory support, data collection and analysis, and data reporting. • Provides scientific analysis of data, • Provides technical direction to the ES and Technicians, • Provides technical direction to the OM.
Regulatory Specialist (RS)	**Reports to Science Manager with primary responsibility to determine regulatory requirements and establish methods for Contractor compliance with Navy EPD requirements.** **- Review regulations for applicability to project,** **- Review project modifications for applicable regulations**
Environmental Specialist (ES)	Reports to the OM and will receive technical direction from the SM. Specific responsibilities include: • Supervises the activities of the technical staff relative to data collection, sampling, and process control. • Coordinates with the Site Superintendent to ensure that activities are properly coordinated for facility operation. • Coordinates the activities of the support staff and provides project status reports to the SM. • Maintains project records of all monitoring and analysis and prepares technical reports presenting the results of the monitoring, analysis, and facility operational performance. • Responsible for sample collection, field screening analysis, and preparation of samples for shipment.
Project Controls	Reports to the PM with primary responsibilities of tracking of all cost and scheduling for the NSWC Crane Project. • Responsible for cost collection and reporting • Responsible for schedule development, maintenance, and reporting.
Project Engineer (PE) (Cleveland)	Reports to the EM with primary responsibilities of coordinating the engineering effort in support of field activities. • Assign Cleveland based resources as required for the completion of all project plans and documents. • Provide engineering support for field activities as required.
Engineering Support Staff	**Technical staff reporting to the Project Engineer with specific task responsibilities as necessary to allow the Project Engineer to fulfill his responsibilities.**

TABLE 3-1 PROJECT RESPONSIBILITIES	
TEAM MEMBERS	**RESPONSIBILITIES**
Site Safety and Health Officer (SSHO)	Reports to the PMO with field reporting to the OM. Implements and ensures compliance with the Task-Specific Site Safety and Health Plan (SSHP). Tracks and reports on safety-related matters. • Responsible for the control and elimination of existing and potential industrial hazards. • Implements and executes personnel surveillance program to ensure proper monitoring of internal and external exposures. • Provides site-specific training to personnel as required by the SSHP. • Tracks all personnel training requirements for heavy and light equipment operation, survey data, certifications, and records to ensure compliance with plans and regulations. • Assists in developing and implementing the SSHP. • Conducts audits as appropriate to ensure compliance. • Reviews and approves work permits for appropriate industrial hygiene and safety controls. • Provides monitoring to ensure the protection of project personnel, the public, and the environment. • Maintains an inventory of industrial hygiene and safety supplies as appropriate. • Maintains monitoring equipment and calibration records. • Stops work when necessary to ensure the safety of personnel and to prevent damage to the environment. • Collects air quality samples, records results, and prepares monitoring reports presenting the air quality results to the U.S. Navy.
Site Quality Control Officer (SQCO)	Reports to the PMO and with field reporting to the SM. The SQCO has primary responsibility for verifying a consistently high level of quality for the project. • Reviews and checks all documents, reports, and testing results. • Coordinates with the PM, ES, and OM on all facility operations. • Provides surveillance of all field operation activities to ensure compliance with this Operational Plan and the QAPP and completes Field Inspection Checklists. • Keeps minutes of the periodic quality meetings. • Implements the three phases of quality control by conducting preparatory meetings prior to beginning a new feature of work, performing surveillance and audits during the implementation phase and finally performing follow-up inspections to verify work was completed in accordance with all associated plans and procedures. • Ensures tracking and resolution of nonconformance/rework items.
Office Engineer	Reports to the PM with primary responsibilities to support all subcontract administration for the project. • Iniciates change orders and change order negotiations, • order and expedite all field purchased items.
Secretary	Reports to Office Engineer and is responsible for receiving in-coming telephone calls and correspondence, maintaining project files, and general clerical duties.

TABLE 3-1 PROJECT RESPONSIBILITIES	
TEAM MEMBERS	**RESPONSIBILITIES**
Environmental Technician	Reports to the Environmental Specialist and is responsible for assisting the ES in the collection of samples and data. • Assists in maintaining project records of all monitoring and analysis and prepares technical reports presenting the results of the monitoring, analysis, and facility operational performance. • Responsible for data and sample collection, field screening analysis, and preparation of samples for shipment. • Operates process instrumentation such as temperature/oxygen probe and data logger, pH analyzer, etc.. • Performs calculations for moisture content analysis, volume and weight conversions, averages, and standard deviations.
Backhoe Operator	Reports to the OM and is responsible for operation of the backhoe/loader for excavation of contaminated material to be processed, placement of backfill, and on occasion will operate the windrow turner and tractor/loader.
Center-Pivot Loader/Tractor/ Skid Steer Loader/**Screener** Operators	Reports to the OM and is responsible for operation of the center-pivot loader, farm tractor and the skid steer loader for; • Loading operations of the amendment grinder-mixer, • Cleanup and windrow forming during loading and windrow turning operations, • Assist in loading finished compost into the live-bottom trailers, • Operate the windrow turner machine as required. • Loading operations of the amendment grinder-mixer. - **Operate excavation site soil screener.**
Truck Driver	Reports to the OM and is responsible for operating the tractor/trailer rigs to deliver contaminated soil to the Bioremediation Facility and deliver finished compost material to the NSWC landfill.
Laborers	Reports to the OM or the designated operator/foreman and is responsible for; • Decontamination of equipment at the excavation site. • Segregation of reject materials from screener, i.e., rocks, metal, wood, etc.. • Operation of the vehicle decontamination facility at the Biofacility. • General site cleanup and maintenance of Biofacility area, sumps, and ponds.
Note: See Section 3.0 of the Task-Specific Site Safety and Health Plan for names and contact.	

4.0
SCHEDULE

Figure 4-1 shows the proposed schedule for loading multiple piles for the various mixtures to be processed during the pilot scale operation. The quantities and time periods may be altered slightly during the pilot phase based on the optimization of amendment selections and mixture ratios. The schedule is presented with activity bars which will show progress once the program begins. The schedule also shows a target bar for establishing the original schedule target milestones. This allows for progress against the original target dates to be observed at a glance.

The total length of time anticipated for the pilot scale test clean soil composting is for 30 days, and contaminated soil composting is for 60 days after that. If a contaminated soil pile reaches all the performance goals before that date, the pile may be considered successful in a shorter time period.

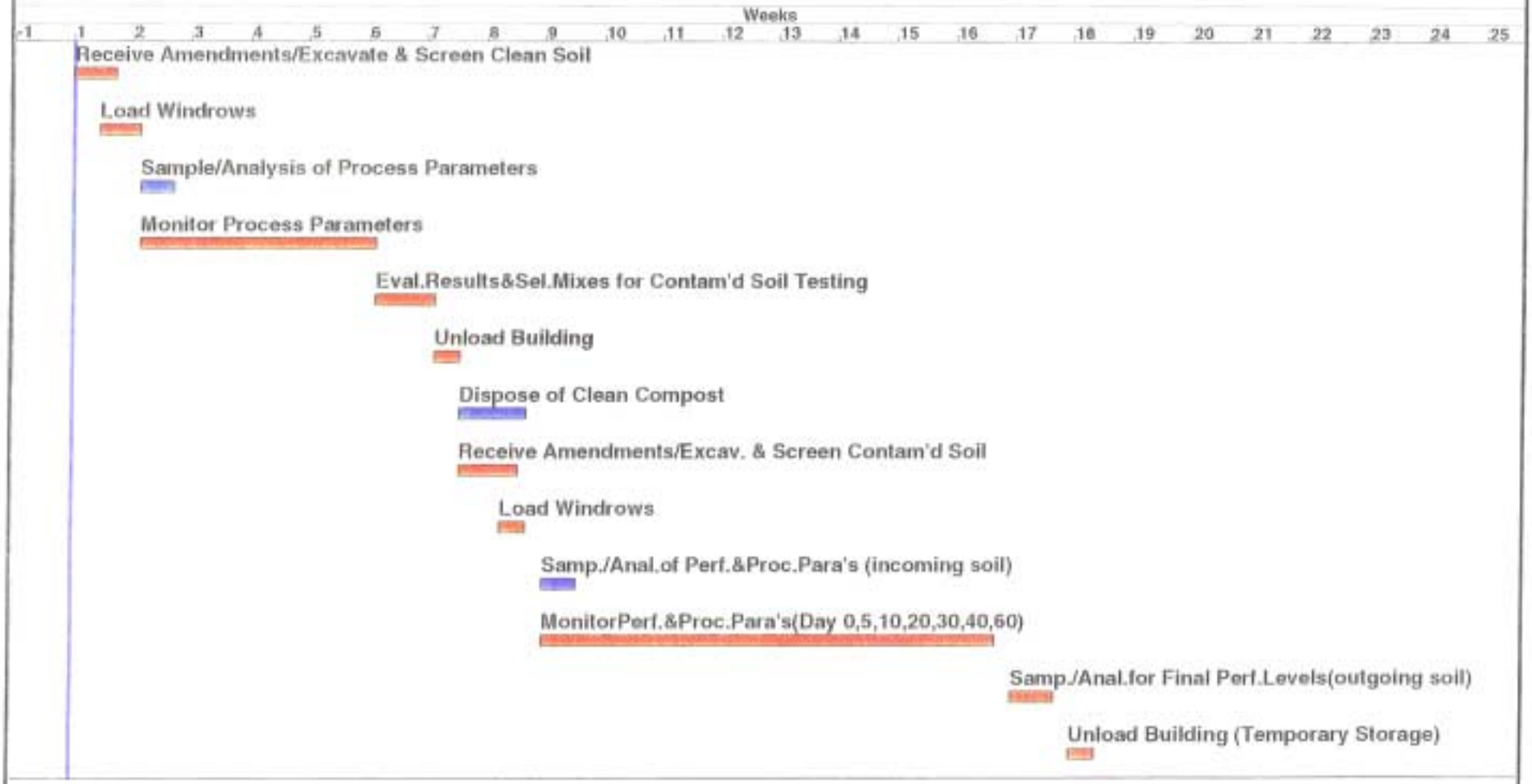

Figure 4-1
Bio Facility Composting Operations
Pilot Scale Operations

5.0
BIOREMEDIATION FACILITY DESCRIPTION

The following descriptions are supported by design drawings and technical specifications provided in the approved Bioremediation Facility Interim Measures (IM) Work Plan and Task-Specific SSHP.

The Bioremediation Facility is shown on drawing G-100, located in Appendix C, and consists of the following basic design elements:

- Three 70 feet wide by 300 feet long compost buildings,
- Amendment storage area,
- Amendment haul road area,
- Equipment and personnel decontamination areas,
- Office and laboratory trailer area,
- Storm water diversion and retention controls, and
- Basic services and utilities including a water supply source for dust suppression and compost moisture additions.

5.1 COMPOST BUILDING AREA

The Compost Building Area is located in the south central and western portions of the Bioremediation Facility as shown on drawing G-100 of Appendix C and as amended in the approved plans. The compost structures consist of a metal structural frame with a light-weight roof designed to accommodate both local climatological conditions and the height of equipment selected for composting operations. The compost building side walls are constructed of six-inch thick concrete to a height of four feet with metal siding extending to the roof line. The entrance/exit ends of the buildings are open with six-inch high entrance/exit ramps to prevent run-on or run-off conditions. The floors of the compost structures are concrete designed to slope to an epoxy coated fluid collection sump. Each compost building is provided with a one and one-half inch underground water line and an emergency eye wash station. Ventilation is provided for each compost building.

The area surrounding the compost buildings is provided with asphalt paving coated with an approved sealant to prevent contaminant migration. The outer perimeter of the paved surface has a six-inch high asphalt curb for run-on and run-off control. The compost building area paved surface slopes to the southwestern edge of this area where a storm water storage/retention pond is located.

5.2 AMENDMENT STORAGE AREA

The amendment storage area is located in the southeast section of the Bioremediation Facility as shown on drawing G-100 in Appendix C, and is used to store bulking agents and manure amendments. The amendment storage/work area is surfaced with asphalt paving and coated with an approved sealant to prevent contaminant migration. The outer perimeter of the paved surface has a six-inch high asphalt curb for run-on and run-off control. The amendment storage/work area paved surface slopes to the southern edge of this area where a second storm water storage/retention pond is located. **If amendments are showing signs of being too fluid, caulking or other material will be placed below the blocks to act as a water stop and to minimize water run-off from one section to another. No POTW sludge shall be stored at the amendment storage area.**

The amendment storage area has multiple temporary bins for storing the amendment materials used in the composting operation. The bin side walls are constructed of precast concrete interlocking blocks which can be adjusted as required to accommodate different storage configurations. **All stockpiles are to be covered for protection from wind and rain. The covers are to be placed in a manner that directs clean storm water away from the storage area. The covers are to be made of reinforced plastic of sufficient strength (10 to 20 mil plastic) to withstand typical weather conditions and frequent handling. The covers are to be held in position with a sufficient number of sand bags to keep them in place during a strong wind. Efforts will be made to avoid puncturing the covers when placing the sand bags. The stockpiles will be covered at the end of every day.**

A 500-gallon capacity diesel fuel storage tank and containment pad is located on the north central edge of the amendment storage/work area. The containment pad is cast concrete with eight-inch CMU block walls two courses high, coated with an epoxy paint and provided with a two-inch drain pipe and a lockable valve for storm water discharge. **The fuel dispenser also has a locking device.**

5.3 AMENDMENT HAUL ROAD AREA

The amendment haul road area is located in the southeast portion of the Bioremediation Facility as shown on drawing G-100 in Appendix C. The amendment haul road is constructed of compacted limestone. Drainage swales on both sides of the haul road and corrugated steel culverts at each end of the haul road maintain proper drainage.

5.4 EQUIPMENT AND PERSONNEL DECONTAMINATION AREA

An equipment decontamination facility is constructed for cleaning trucks and equipment that have come into contact with contaminated soil within the Bioremediation Facility. Trucks and equipment will be cleaned using a high-pressure, low volume water spray system. After washing, the equipment will be visually inspected, and recleaned if necessary, until no visual signs of residual soil remain. The equipment decontamination area consist of a vehicle wash area, a 4,000-gallon capacity epoxy coated fluid collection and storage sump, a toilet facility, and equipment room. **A boot**

wash is located on the east side of the truck wash to allow personnel to cleanse their boots prior to moving to the trailers. All decontamination fluids collected in the sump will be containerized and used for initial compost moisture adjustment or sampled for disposal requirements. The sanitary sewer line from the toilet room is routed to a pump/lift station in the office/laboratory area.

The personnel decontamination area consists of a shower/locker room trailer with change room area, lockers, lavatory, toilets and showers. The northern end of the trailer serves as a lunch/conference room. The sanitary sewer line is routed to the pump/lift station in the office/laboratory area.

5.5 OFFICE AND LABORATORY TRAILER AREA

The office and on-site laboratory trailers are located north of the compost building area as shown on drawing G-100 in Appendix C. They are provided with a compacted limestone parking area with parking logs for 24 vehicle capacity. Sanitary sewer service is provided by way of a grinder pump/lift station as specified in the technical specifications and drawings. The existing roadside drainage swales are regraded to obtain proper drainage.

The on-site laboratory trailer contains the necessary equipment and supplies to support the process monitoring requirements as described in Section 8.0.

5.6 STORM WATER DIVERSION AND RETENTION CONTROLS

The facility utilizes both the existing topography and site drainage controls to control storm water run-off and run-on as shown on drawing G-100 in Appendix C. Two lined storm water retention basins sized to store rainfall from a 10-year, 24-hour storm are constructed inside the Bioremediation Facility. **The discharge pipes for both ponds are controlled with a locking device.** They allow for controlled on-site storm water storage/retention and off-site storm water discharge. Water collected in the retention basin will be sampled following a storm to determine whether the water meets off-site discharge requirements. Water not meeting off-site discharge requirements will either be recycled in the soil treatment area for initial compost moisture adjustment or transported to one of the water treatment facilities located at Mine Fill A and Rockeye. Enough retention capacity will be maintained to allow for unexpected rainfall events. Evaporation will be the preferred method of decreasing retention pond volumes, but analyses of retained water shall be kept current so that water may be discharged when needed. An NPDES discharge permit modification (NSWC, 1997) has been obtained for discharge to the local drainage swales and discharge into the water treatment facilities.

6.0
PILOT SCALE OPERATION

Pilot scale tests shall be performed prior to full scale operations, which is dependant upon successful pilot scale test results. It is planned that the pilot-scale tests will examine variations in compost mix by using ~~eight~~ **seven** separate, short windrows of approximately 60 cubic yards each (20 to 25 feet long). One pilot scale test mix design is based on the final results of the bench scale studies. Other amendment mixes will be partially derived from previous successful operations of composting explosive contaminated soil. **The U.S.Navy and the U.S. EPA will meet after the clean soil portion of the test is complete and decide on the final selection of mixes, based on the clean soil results, that will be used in the contaminated soil portion of the test.** One pilot scale test mix design is based on the final results of the bench scale studies. Other amendment mixes will be partially derived from previous successful operations of composting explosive contaminated soil.

The pilot scale test treating explosive contaminated soils shall last 60 days. If a pile meets the performance goals, the U.S. Navy, in coordination with the U.S. EPA, may decide to end the treatment process sooner for that particular successful pile. Prior to pilot scale testing with explosives contaminated soil, all operations and mix designs will first be tested using clean soil from the on-site borrow source **for a 30 day test period**. All activities will be performed simulating a contaminated soil operation with the exception of the laboratory analysis and some of the excavation site activities. In addition to testing the basic batch design parameters and scale-up factors, the pilot scale test will allow operations to field-check many of the procedures presented in this Operational Plan prior to any full scale operations. The pilot test will be used to check material handling methods, windrow formation, and other operating procedures, in preparation, for the full scale operation. The proposed site-specific process goals as well as the NCP treatment efficiency goals are discussed in Section 1.2 of this plan. If the pilot scale tests fail and no mix meets the performance goals, the U.S. EPA Region 5 **RCRA Project** Coordinator shall be notified and new bench scale testing will be required.

The Bioremediation Facility operation process flows are illustrated on drawings 4324-0009-01-A, -B, and -C in Appendix C. Drawing 01-A illustrates the main composting processes while drawings 01-B and 01-C illustrate wastewater disposition and excavation site processes, respectively.

The pilot scale composting operation consists of eight major steps to be performed for each windrow. The sequence of steps is listed below and is described in detail in the following subsections.

1. Receive and store amendments.
2. Load amendments into grinder/mixer.
3. Load amendment blend into windrow.

4. Excavate, screen, and transport soil to Biofacility.

5. Load soil received from excavation into windrow.

6. Add moisture (if necessary) and turn/mix windrow.

7. Continue daily turning and monitoring of parameters until treatment goals are met.

8. Unload windrow and transport soil/compost to the interim storage building at the Bioremediation Facility.

6.1 RECIPE SELECTION

The mixes for use in the pilot-scale testing are made up of 25 percent soil and a combination of amendments consisting of cow manure, chicken manure, **turkey manure,** POTW sludge, alfalfa, and potato sludge, and bulking materials consisting of straw, ~~corn stalks~~, sawdust, and wood chips. **The final recipe selection is based on results from the Dewar Testing.** Recipe percentages are specified by volume and are listed in Table 6-1 **and Table 6-1a**.

The amendment/soil quantities will vary depending on the recipe; however, the volume ratios of soil to amendments will be maintained. ~~Recipe #6 simulates the Army Engineering Waterways Experiment Station~~ **WES** ~~bench scale mix of 20% soil, 40% alfalfa, and 40% cattle manure, except adjusted to a 25% soil loading. The WES bench scale cattle manure contained 50% straw bedding and 50% pure manure; therefore, the total of recipe #6 cow manure and straw is equivalent to the adjusted volume of 37.5 %. Recipe #8 simulates the Umatilla Depot Activity (UMDA) composting mix of 30% soil, 18% sawdust, 18% alfalfa, 21% cattle manure, 3% chicken manure and 10% potato waste, except adjusted to a 25% soil loading.~~ Final **Mix 1 (shown above) is the same as Dewar Recipe Mix 3 (refer to the end of Section 1 of this plan). Final Mix 2 (shown above) is the same as Dewar Recipe Mix 4. Final Mix 3 (shown above) is the same as Dewar Recipe Mix 9. Final Mix 4 (shown above) is the same as Dewar Recipe Mix 10, which simulates the successful recipe from the Umatilla Army Depot (UMAD) pilot and full scale test results. Final Mix 5 (shown above) is the same as Final Mix 4 accept the type of manure is changed, in order to see if turkey performs better than the cow and chicken mix. Final Mix 6 (shown above) is similar to Final Mix 5, but the ratio of alfalfa is reduced and the ratio of potato waste is increased to try and see if cost savings of the amendment types will affect the performance or not, also the sawdust is cut in half and wood chips added to add more aeration potential and reduce cost. These final mixes were selected in coordination of both the U.S. Navy and the U.S. EPA. The resulting disposal of "treated soil" from the Final Mix 1 will need to be coordinated between the U.S. Navy, the U.S. EPA, and the IDEM, since the POTW sludge is currently being land treated on-site through a State approved permit.**

~~TABLE 6-1~~ DELETED AND REPLACED ~~PILOT SCALE WINDROW RECIPES~~					
Blend	~~Ingredient~~	~~Volume~~	Blend	~~Ingredient~~	~~Volume~~
~~#1~~	~~Cow Manure~~	~~19%~~	~~#2~~	~~Chicken Manure~~	~~3%~~
	~~Straw~~	~~56%~~		~~Straw~~	~~72%~~
	~~Soil~~	~~25%~~		~~Soil~~	~~25%~~
~~#3~~	~~POTW Sludge~~	~~25%~~	~~#4~~	~~Cow Manure~~	~~25%~~
	~~Alfalfa~~	~~25%~~		~~Chicken Manure~~	~~15%~~
	~~Wood Chips/Sawdust~~	~~25%~~		~~Wood Chips~~	~~35%~~
	~~Soil~~	~~25%~~		~~Soil~~	~~25%~~
~~#5~~	~~Cow Manure~~	~~5%~~	~~#6~~	~~Cow Manure~~	~~18.5%~~
	~~Chicken Manure~~	~~1%~~		~~Alfalfa~~	~~37.5%~~
	~~Straw~~	~~69%~~		~~Straw~~	~~19%~~
	~~Soil~~	~~25%~~		~~Soil~~	~~25%~~
~~#7~~			~~#8~~	~~Chicken Manure~~	~~3.5%~~
	~~Cow Manure~~	~~5%~~		~~Cow Manure~~	~~23%~~
	~~Straw~~	~~60%~~		~~Potato Waste~~	~~10.5%~~
	~~Alfalfa~~	~~5%~~		~~Alfalfa~~	~~19%~~
	~~Wood Chips~~	~~5%~~		~~Sawdust~~	~~19%~~
	~~Soil~~	~~25%~~		~~Soil~~	~~25%~~

~~1. Assumes 0% Nitrogen or Carbon content in soil.~~
~~2. Manures contain no "bedding" (straw)~~

TABLE 6-1
FINAL PILOT SCALE WINDROW RECIPES

Blend	Ingredient	Volume	Blend	Ingredient	Volume
#1	POTW Sludge	25.00 %	#2	Chicken Manure	35.00 %
	Alfalfa	25.00 %		Wood Chips	40.00 %
	Sawdust	12.50 %		Soil	25.00 %
	Wood Chips	12.50 %		---	---
	Soil	25.00 %		---I	---
#3	Turkey Manure	25.00 %	#4	Cow Manure	22.50 %
	Alfalfa	25.00 %		Chicken Manure	3.25 %
	Wood Chips	25.00 %		Potato Waste	10.75 %
	Soil	25.00 %		Alfalfa	19.25 %
	---	---		Sawdust	19.25 %
	---	---		Soil	25.00 %
#5	Turkey Manure	25.75 %	#6	Turkey Manure	25.00 %
	Potato Waste	10.75 %		Potato Waste	15.00 %
	Alfalfa	19.25 %		Alfalfa	15.00 %
	Sawdust	19.25 %		Sawdust	10.00 %
	Soil	25.00 %		Wood Chips	10.00 %
	---	---		Soil	25.00 %

1. Assumes 0% Nitrogen or Carbon content in soil.
2. Manures contain no "bedding" (straw) and a maximum of 1% other natural materials such as feathers.

TABLE 6-1 a FINAL PILOT SCALE WINDROW RECIPES (continued) THE SUCCESSFUL CLEAN SOIL TEST FROM THESE THREE MIXES WILL GO ON TO CONTAMINATED SOIL TESTING					
Blend	Ingredient	Volume	Blend	Ingredient	Volume
#7A	Chicken Manure	3.20 %	#7B	Chicken Manure	15.00 %
	Straw	71.80 %		Straw	60.00 %
	Soil	25.00 %		Soil	25.00 %
#7C	Chicken Manure	10.00 %			
	Potato Waste	10.00 %			
	Straw	55.00 %			
	Soil	25.00 %			

1. Assumes 0% Nitrogen or Carbon content in soil.
2. Manures contain no "bedding" (straw) and a maximum of 1% other natural materials such as feathers.

Mix 1 containing the POTW sludge will begin treatment on Day 15 of the clean soil test period. This will give the U.S. Navy the opportunity to meet the solids content limits established in this plan. The U.S. Navy shall either complete 15 or 30 days of testing this mix on clean soil. This may extent the period of time between the clean and contaminated soil testing periods.

Mix 7A (the same ratio as Dewar Test Mix 2) is based on performance during a previous clean soil test performed by the U.S. Navy. Mix 7A will not be tested during the clean soil portion of this test. Results from the previous test shall be used for the final Mix 7 selected for the contaminated soil portion of the test. Mix 7B increases the chicken percentage to try and obtain better degradation results than the Dewar Test results. Mix 7C adds potato waste as a needed nutrient source and brings in characteristics of the Umatilla work. Straw is being used instead of alfalfa and wood chips to see if costs can be reduced. The consistency of the potato waste will need to be carefully watched since sawdust is not being used as an absorbent. Straw is being relied on for that function also. Mixes 7B and 7C shall be tried in the clean soil portion of the test. The results of Mixes 7A, B, and C will be compared for the best performance and the final Mix 7 for contaminated soil will be selected from the group, with confirmation from the U.S. Navy and the U.S. EPA that any of those mixes can continue into the second phase.

Prior to any contaminated soil testing, all equipment will be varied for compliance with the Hazardous Analysis recommendations to make sure there are no potential explosives hazards prior to handling of explosive contaminated soil.

Each of the amendments serves a specific purpose (Foster Wheeler, 1996):

> **Potato waste provides a source of carbohydrates and is the primary food source for the microbes;**
>
> **Manure is a source of nutrients and organic material, which can compliment the potato waste.**
>
> **Wood chips, sawdust, and straw are primarily added for bulk and absorption, to ensure the porosity/permeability of the soil to increase oxygen flow through the pile.**
>
> **The "food value" for most microbes is low; and the alfalfa adds some nutrients and, like the wood chips, is primarily used for bulk.**

A spreadsheet chart **using the final recipes** has been developed and will be maintained by the Project Manager in the field office at NSWC Crane. The spreadsheet and its use are described in Field SOP 4.0 in Appendix D. Input to the spreadsheet will be made based on carbon and nitrogen content of the raw materials received, which may vary from shipment to shipment. By updating the spreadsheet as each mix is produced, the estimated carbon to nitrogen ratio, mix density, and mix unit cost in dollars per cubic yard can be readily calculated.

The performance goals and process goals will be monitored for successful achievement as discussed in Section 1.2. Selected mixes which exhibit rapid initial degradation of explosives, i.e., greater than 50% in ten days, may be considered for testing with a 30% soil loading at a later date**, as agreed upon by the U.S. Navy and the U.S. EPA**. Upon completion of the initial pilot scale test, the successful mixes meeting the performance goals may be tested at a 30% soil loading at a later date in a second pilot test or during the full scale operation.

6.2 SOIL EXCAVATION, SCREENING, AND SITE RESTORATION

The first phase of the pilot scale test will utilize clean soil from the **approved** NSWC on-site borrow area. Clean soil will be excavated, screened, and transported to the Bioremediation Facility simulating a contaminated soil operation. However, in order to be cost effective, a complete Soil Excavation Plan has not been developed for the clean soil excavation activities.

Prior to initiating any excavating at Mine Fill A, an Excavation and Trenching Permit will be required and will include a statement of clearance for safe access based on the removal or absence of unexploded ordnance in the work zone. The PM will be responsible for obtaining this permit through the Public Works Department, Building 2516. Prior to mobilization of excavation equipment, all areas of excavation, work

configuration, the Exclusion Zone (EZ), Contamination Reduction Zone (CRZ), Support Zone (SZ), soil screener location, stockpile area, etc. shall be established in the field and clearly identified as described in the Soils Excavation Plan (Appendix E).

6.2.1 Soil Excavation

Soil excavation will begin at SWMU #12/14, Mine Fill A, and be performed by a backhoe/loader and a steer skid loader (Bobcat) as described in the Soils Excavation Plan in Appendix E. The areas of excavation are depicted in Figure 6-1, near Buildings 153 and 158. Previous analytical results indicate high levels of TNT and RDX near the vehicle turnaround area north of Building 153 as discussed in Section 1.3 of this plan. A second area west of Building 158 has been identified as an additional contaminated soil source to insure excavation of 200 cubic yards of soil for the pilot scale operation.

Analytical results show elevated levels of TNT and RDX in the area west of Building 158. Additional details are provided in Appendix B, Photographs, and Appendix E, Soils Excavation Plan drawings. In areas of shallow bedrock, excavation will stop upon bedrock contact.

Areas under excavation will be identified and barricaded for personnel protection as described in the SSHP (Appendix A). **Upon completion of each day's excavation, the** ~~The~~ area will be sampled and backfilled to avoid leaving open excavations, during periods of predicted precipitation. During daily operations, open excavations will be covered during periods of precipitation to prevent contact waters from forming. The areas of excavation will be identified based on analytical results from explosives testing, as described in Section 9.3.

6.2.2 Soil Screening

Contaminated soil will be screened at the excavation site to remove oversized material (1½" or larger) from the soil prior to transport to the Bioremediation Facility for pilot scale composting. The excavated soil will be loaded into the soil screening equipment using the backhoe/loader. The screening will be performed using a screen with a minimum 50 ton/hr capacity. The screen will be a standard design, portable, road legal for towing, self-powered, and will have a feed hopper with grizzly bars, fines stacking conveyor and a reject (oversized material) discharge conveyor. A step by step procedure for soil screening is provided in SOP 7.0 in Appendix D.

After screening, the fines shall be dropped from the fines stacking conveyor into a lined stockpile area, or directly into a truck bed for transport to the Bioremediation Facility in covered live-bottom semi-tractor trailers. Stockpiled material (coarse fractions) will be placed on a lined and bermed area and will be covered during periods of precipitation.

The oversized material that is screened out shall be separated, i.e., rocks, wood waste, and soil clods. The soil clods shall be spread out within the EZ in a four to six inch thick layer, on a planned excavation area which is lined and bermed, and allowed to dry sufficiently prior to pulverizing by the excavating equipment as described in the Soils Excavation Plan in Appendix E. The soil shall then be cycled through the screener again.

Wood wastes, such as tree roots, lumber pieces etc., will be stockpiled in a covered, lined, and bermed area for use as a bulking material for future operations. The rocks will be rinsed on the decontamination pad and used as natural fill material. Visual examination and rinse water samples, tested for explosives using laboratory analysis, will be used for verification of rock decontamination. The rinse water will be collected and transported to the Bioremediation Facility for use as process water during initial compost windrow formation. Should other materials be found during the excavation activities, the Contractor shall notify the U.S. Navy for disposition. All excavation, truck and rock decontamination, stockpiling and sorting will be performed in approved areas as described in the Soils Excavation Plan in Appendix E.

Post-excavation soil samples will be collected and their locations recorded. This sampling is further described in Section 4.5 of the Pilot Scale Biofacility QAPP.

The transport route may vary pending NSWC Crane operations during the periods of soil transport. However, the following transportation route to the Bioremediation Facility and Figure 6-2 should be utilized for the Mine Fill A excavation activities.

> The vehicles will exit the Mine Fill A facility by turning left onto Highway 45 (H-45). The speed limit is 35 MPH at this location. Travel south on H-45 for approximately 4½ miles and turn left on Highway 161 (H-161). Continue on H-161 past the golf course, and turn right onto the NSWC landfill entrance road. The Bioremediation Facility is immediately on the left.

As equipment is no longer required in the EZ it will be decontaminated and moved to the SZ. After all contaminated materials are containerized, the remaining equipment will be decontaminated and moved to the SZ. The decontamination equipment will then be cleaned and the work zone barriers removed. All decontamination fluids will be collected, **and** sampled, **and then:** used to moisten the initial compost at the Bioremediation Facility; **or** disposed at the on-site sewage treatment plant; **or** disposed at the Mine Fill A treatment facility; or ~~a disposal~~ **disposed of using a** method approved by the U.S. Navy **EPD Representative**.

6.2.3 Backfilling and Site Restoration

The extent of any excavation and the points at which post-excavation samples were taken will be surveyed to determine the volume of the excavation, to record the extent of the excavation, and to record the location of the post-excavation samples. The excavation will be backfilled to grade with non-contaminated fill from an on-site borrow source at the end of the excavation period, or at the end of each day during periods of predicted precipitation.

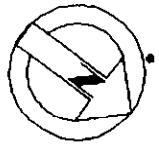

LEGEND

□ 2512	BUILDING
- — — — —	PROPOSED EXCAVATION AREA(FINAL AREAS WILL DEPEND ON FIELD SAMPLE RESULTS)
N	CONVEYOR
-/-/-/-	STEAMLINE
+++++	RAILROAD

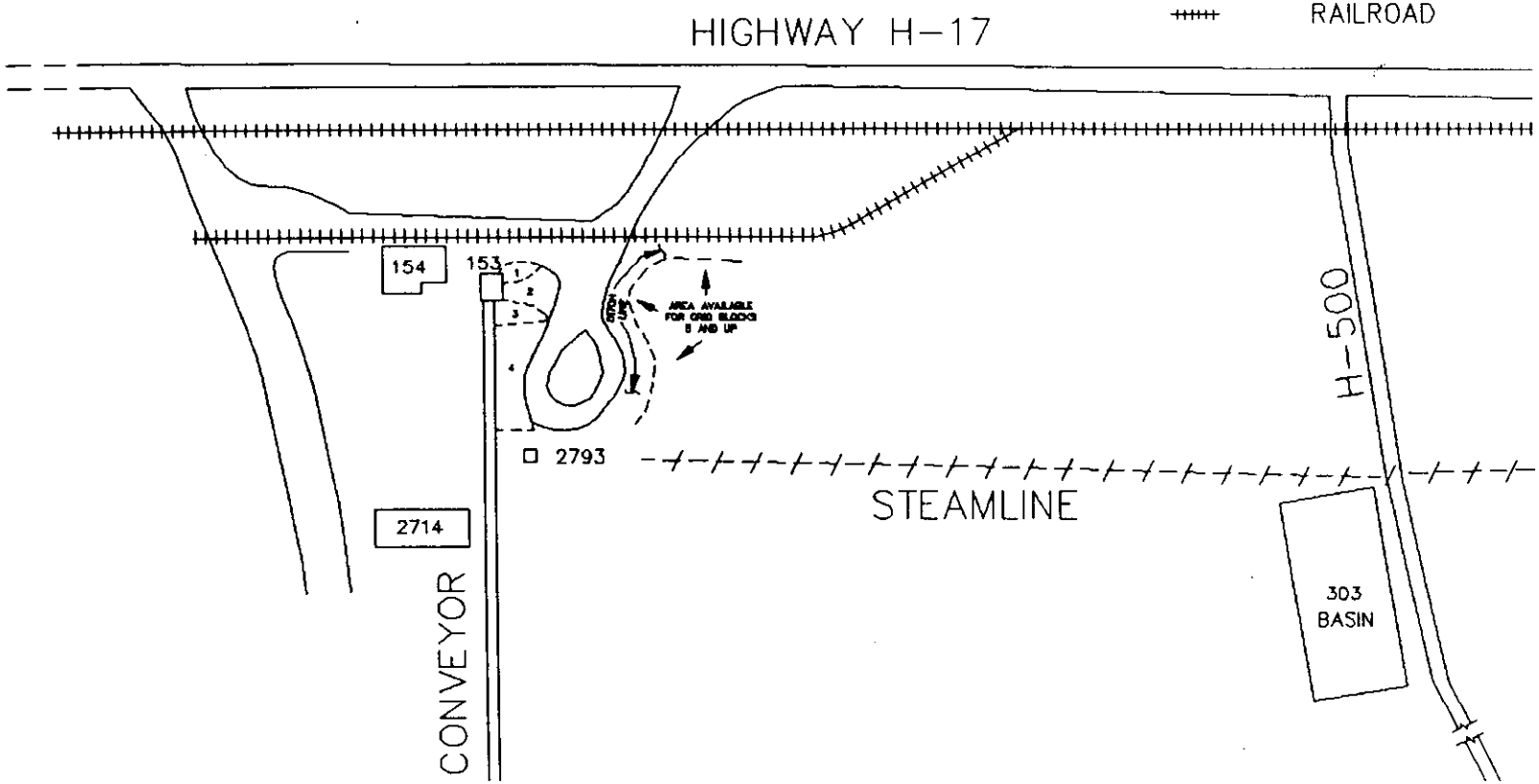

SOIL EXCAVATION AREAS–MINE FILL A

(NOT TO SCALE)

MORRISON KNUDSEN CORP.	
Drawing Figure 6-1	Rev. 1
Date 4/4/97	Sheet 1

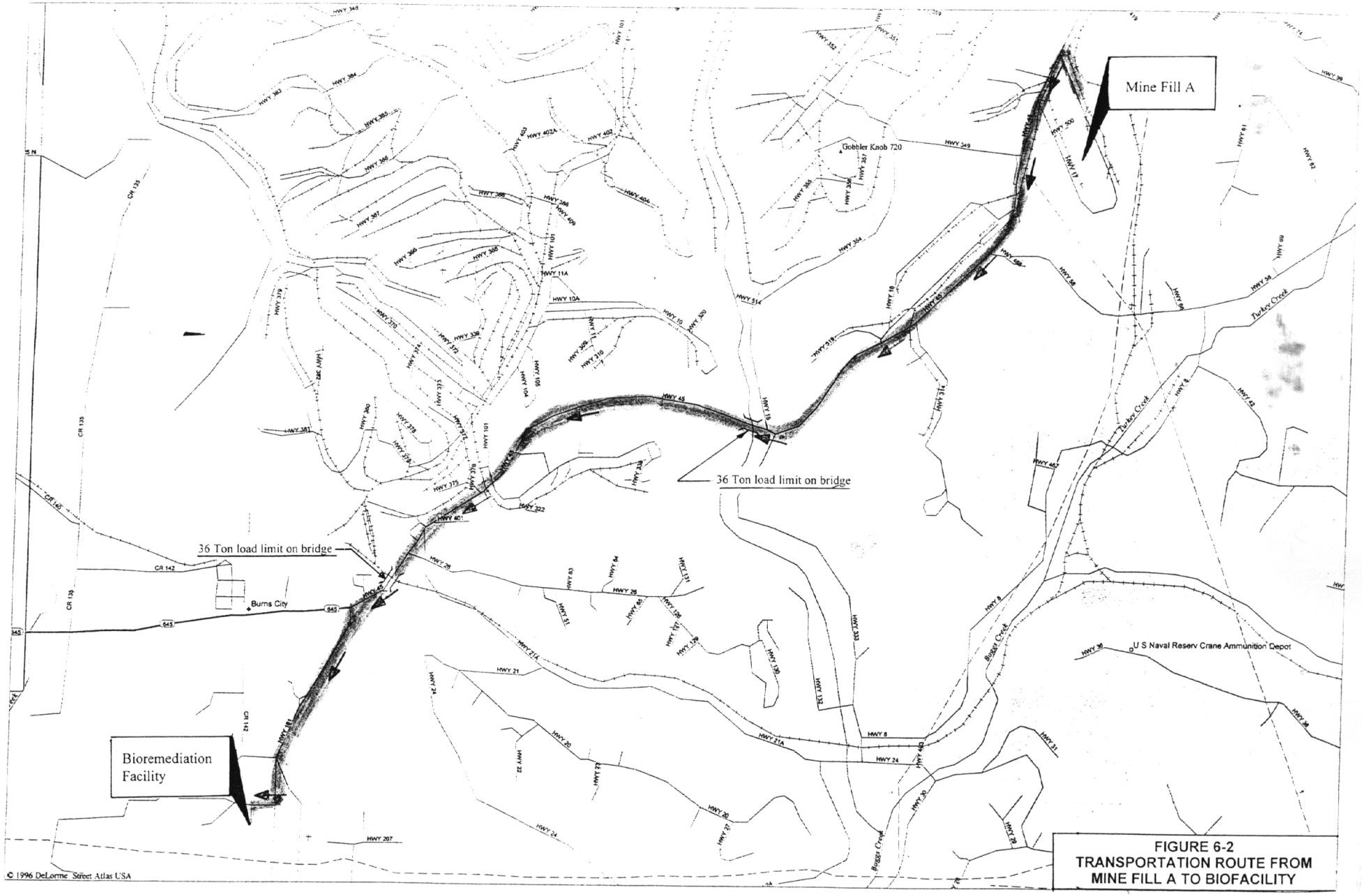

FIGURE 6-2
TRANSPORTATION ROUTE FROM MINE FILL A TO BIOFACILITY

Backfilled areas will be covered with a minimum of three inches of topsoil (defined as having a minimum of 5% organic matter, which may include the clean soil compost material), seeded with native grasses, fertilized, and watered. Erosion control measures will be maintained until the growth of grasses is sufficient to prevent erosion. Additional details on backfilling and restoration activities are provided in the Soils Excavation Plan in Appendix E.

Should the area of contaminated soil require excavation beyond the volume needed for the pilot scale tests, additional soil excavation and confirmation sampling will take place during the full scale operation.

6.3 AMENDMENT SUPPLY AND STORAGE

The amendments shall be brought on-site by way of the amendment haul road and stored in the asphalt-paved amendment storage bins as illustrated on drawing P-100 in Appendix C. All amendment suppliers will be identified in the Record of Recipe form, Field **Standard Operating Procedure (**SOP**)** 4.0 in Appendix D.

6.3.1 Manure (cow, turkey, chicken)

Cow Manure

The primary amendment ~~supplier~~ **transporter** is: Dayhoff Farms, **located in Lyons, Indiana,** (cow manure, **turkey manure**, chicken manure, alfalfa hay and straw).

The cow manure comes from **Lueken Dairy, located in Birdseye, Indiana. The cows are Holstein milk animals. Their diet consists of alfalfa, grain, and grain by-products. The supplier is** a free-stall dairy and ~~is~~ **supplies** essentially pure manure (i.e., free of bedding material). This manure has been processed through a separator to remove most free liquid leaving the cow manure at approximately 79% moisture.

Chicken Manure

The chicken manure comes **Wabash Valley Produce, located in Dubois, Indiana. The chickens are** ~~from layer~~ **laying** hens **up to 80 weeks old. Their diet consists of grain, grain by-products, and calcium. The manure contains no bedding,** and contains approximately 1% feathers, eggs or other natural impurities. It is also free of bedding material.

Turkey Manure

The turkey manure comes from D. Benham, a Purdue Farms turkey grower, located in Lyons, Indiana. The turkeys are hens, 6-14 weeks old. Their diet consists of grain, grain by-products, meat by-products, fish by-products, calcium, phosphorus, salt, trace minerals, animal and vegetable fat, anti-oxidants, metholnine, and lysine. The manure contains a bedding material

that is a mixture of approximately 30% by volume rice hulls, approximately 60% by volume sawdust, and approximately 10% by volume wood chips, and contains approximately 1% feathers.

During any winter operations, the feed and fat content of the chickens and* the turkeys must be evaluated.

~~Both the~~ **The** cow and chicken **and turkey** manures will be delivered in bulk to the amendment storage area. Due to potential odor and leaching concerns, the manures will be delivered within one week of the time they will be incorporated into the windrows to ensure quality and freshness of the amendment.

6.3.2 POTW Sludge

The POTW sludge comes from the main wastewater treatment plant tanks at the NSWC. The sludge is primarily liquid and will be dried or solidified to contain a solid concentration of 20 percent or greater (consistent enough to be stockpiled without causing product run-off). It will be delivered to the Bioremediation Facility at approximately 65-70% moisture. The material will arrive only at the time that particular windrow is being formed. There will be no storage of POTW sludge at the Bioremediation Facility. Caution will be used not to spill or produce leaching of this material anywhere at the facility. The Windrow containing this material will be constructed closest to a sump area in one of the buildings in order to reduce any leachate flow into other windrows.

6.3.3 Wood Chips and Sawdust

The amendment supplier for the sawdust and the wood chips are the NSWC (from chipped wood supplies at the facility), The Good Earth Compost Company located in Bloomington, Indiana, and the Jack Logsdon Company located in Bedford, Indiana. Wood chips and sawdust will ~~also~~ be delivered in bulk **to the amendment storage area, approximately one week prior to windrow formation. Wood chips shall be ground to 1.5 inch minus size.**

6.3.4 Alfalfa and Straw

The amendment supplier for the alfalfa is Dayhoff Farms. The alfalfa hay and straw will be provided in bales bound with a plastic mesh baling material which will be removed prior to amendment blending. **The supplier will deliver the alfalfa within one week prior to windrow construction.**

6.3.5 Potato Waste

The amendment supplier for the potato waste is a waste product from Frito Lay Potato Company, located in Frankfurt, Indiana and supplied by Kambach Feeds, located in Frankfurt, Indiana. Vegetable waste will be

delivered in bulk at approximately 65 to 70% moisture. **The potato waste will contain a solid concentration of 20 percent or greater (consistent enough to be stockpiled without causing product run-off). The vegetable waste shall be delivered over a 7-day period prior to windrow construction. Due to the potential of product decomposition, the supplier will not be allowed to stockpile the potato waste for more than 7 days.**

6.3.6 Amendment Storage

The amendments **(with the exception of the POTW Sludge)** shall be stockpiled in bales or piles in bins delineated by movable concrete dividers. Available amendment storage capacity has been allocated for more than 1,200 cubic yards, thus allowing more than sufficient storage capacity of amendments for the pilot scale operation. However, only sufficient amounts of amendments for the pilot scale recipes will be stored in order to minimize excess materials at the completion of pilot scale operations.

Any ponding of water on the asphalt pavement shall be manually removed within 24 hours. All stockpiles are to be covered for protection from wind and rain. The covers are to be placed in a manner that directs clean stormwater away from the storgage area. The covers are to be made of reinforced plastic of sufficient strength (10 to 20 mil plastic) to withstand typical weather conditions and frequent handling. The covers are to be held in position with a sufficient number of sand bags to keep them in place during a strong wind. Efforts will be made to avoid puncturing the covers when placing the sand bags. The stockpiles will be covered at the end of every day. During periods of precipitation, the amendments will be covered to minimize high nitrate and suspended solids run-off to the storm water retention ponds.

6.4 LOAD AMENDMENTS INTO GRINDER/MIXER

Amendments will be loaded in the proper proportions using a center-pivot loader into the farm tractor-powered grinder/mixer unit located in the amendment storage area and transported to the compost building as illustrated on drawing P-100, in Appendix C. The unit will be loaded with amendments based on the selected recipe per the volume ratios given in Table 6-1. Proper ratios will be established based on a weight conversion utilizing scales which are built into the grinder/mixer. Loading, complete grinding and blending of as much as 700 cubic feet (nearly 26 cubic yards) of amendments, will take approximately ten minutes. Section 10.0 provides a more detailed description of the operation equipment, and Field SOP 4.0 in Appendix D provides a step by step procedure for loading and blending of amendments.

6.5 LOAD AMENDMENT BLEND INTO WINDROW

Windrow formation will begin by unloading the amendment blend for recipe #1, as shown on drawing P-100, in Appendix C. The amendments will be unloaded from the grinder/mixer unit through a side mounted discharge conveyor forming a windrow approximately six feet high and 12 feet wide. The grinder/mixer will return to the

amendments storage for reloading once the blending hopper is emptied. Unloading of the amendment blend will take approximately ten minutes per load. This process will continue until a windrow is formed approximately 20 to 25 feet long.

A second windrow adjacent to and partially overlapping the first windrow, will then be loaded into the building. This will form a single larger windrow approximately 20 feet wide with two peaks six feet high. Figure 6-3 shows the amendment and soil loading windrow dimensions. As windrow #1 is completed (recipe #1 amendments), the amendment grinder/mixer will be loaded with materials in the proper proportions for recipe #2. This process will continue until all recipe amendment windrows have been formed as shown in Figure 6-4 and drawing P-101 in Appendix C.

Once all amendment blends have been loaded into a building, the windrow turner will turn and shape each of the test piles into a 20 feet wide by 4 feet 5 inches tall windrow. Field SOP 5.0 in Appendix D provides a step by step procedure for loading the amendment blends into windrows.

6.6 LOAD SOIL INTO WINDROW

Once the amendment blend has been loaded in the building and shaped, screened soil shall be transported from the excavation area to the composting facility in covered semi-tractor live bottom trailers. During the clean soil tests, the soil will be taken from an on-site borrow source. During subsequent tests with contaminated soil, the soil will be excavated from Mine Fill A. The trucks shall be inspected in the facility work area, and the quantity and condition of soil recorded, prior to the trailer entering the building. The Project Manager may have flexibility in the field in changing truck routes through the buildings as long as track-out is minimized and the windrows are not impacted. Any major changes will be noted in the field logbook.

Upon arrival at the Bioremediation Facility, the soil will be loaded onto the amendment windrow using a self powered tow-behind hopper/conveyor unit **as** shown on drawings P-102 and P-103 in Appendix C. Once the truck has backed into the building, the hopper/conveyor unit will be attached to the rear of the trailer. As the trailer begins to unload the soil into the tow-behind hopper, the discharge conveyor will place the soil on top of the existing amendment blend windrow and complete the formation of the windrow. The truck unloading conveyor and the tow-behind conveyor are both equipped with a variable speed drive for optimum discharge control based on varying soil conditions. As the soil reaches the proper height, the truck will slowly move forward continuing to place soil over the amendment blend windrow until the trailer empties its load.

Soil will be loaded into the south windrows first working from west to east. The empty truck will disconnect from the conveyor unit, leave the building, and proceed to the vehicle decontamination facility (as illustrated on drawing P-102 in Appendix C) where the wheels and exterior will be washed with a high pressure, low volume spray. The truck will then return to the excavation site for another load of soil. Upon returning with

another load of soil, the truck will back into building #3 where the hopper/conveyor unit will be reconnected for soil unloading. This process will continue until pilot scale amendment blend windrows 1 and 2 are covered with soil to the proper height as shown in drawing P-102 in Appendix C.

Soil will be loaded into windrows on the north side of the building working from east to west in a similar fashion as described above. The truck will exit the west end of the building as shown in drawing P-103 in Appendix C. This process will be repeated for loading of soil into windrows in other buildings. Field SOP 6.0 provides a step by step procedure for transporting and loading soil into the windrows.

Incidental sediments and soils removed from the water collection sumps or ponds will be added to the windrows at this initial stage. Once mixing and initial sampling of the windrow has occurred, no additional potentially contaminated sediments, soils, or water will be added.

6.7 TURN/MIX WINDROW

Once the soil has been loaded into the windrow to the specified level, the windrow/compost turning machine will commence mixing and reforming the windrow. The travel speed of the windrow turner is adjusted automatically based on the density of the material being turned to maintain a constant load on the drum. The windrow turner may make three or more passes during initial windrow construction to assure thorough mixing. The final shape and size of the homogeneous pilot scale windrow is shown on Figure 6-3.

After turning each windrow recipe, **the equipment will be locked out and then,** loose or caked material will be cleaned off of the windrow turner by light brushing or scraping prior to turning the next recipe. Material which has fallen off the sides or been thrown beyond the ends of the windrow will be cleaned up with the skid steer loader and placed back onto the windrow maintaining the original configuration. Flyout material will be minimized by the rubber flap at the rear of the windrow turner. The windrow turning frequency is expected to be daily but will be adjusted as necessary to maintain proper aeration, temperature, and moisture as described in Section 8.0. Figure 6-4 depicts four pilot scale windrows shown with amendment blends only (top view) and the final windrow formation after soil addition (bottom view).

Moisture addition will take place during the windrow mixing stage. A 1½ inch flexible hose will be connected to the spray manifold inlet mounted on the windrow turning machine for a water supply. The windrow turner is also equipped with a 200-gallon tank for use when water addition is required without a flexible hose source. Potable water will be sprayed onto the compost as it is mixed, thus maintaining the desired moisture concentration throughout the windrow matrix. The method for determining the quantity of water added is addressed in Field SOP 8.0 in Appendix D.

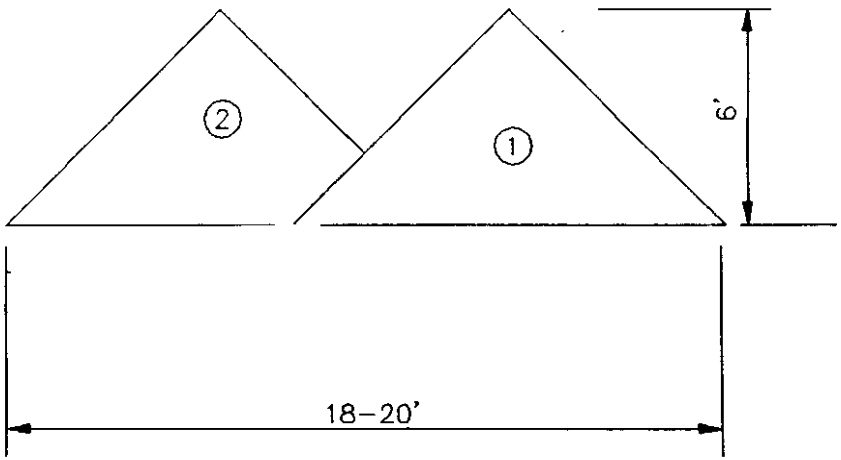

A

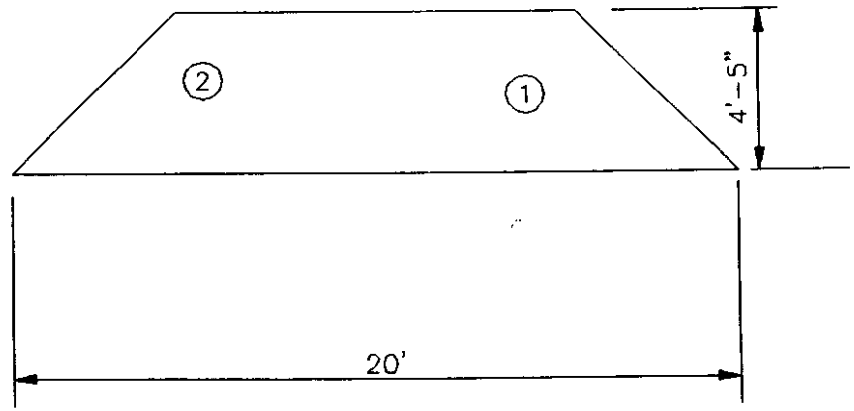

B

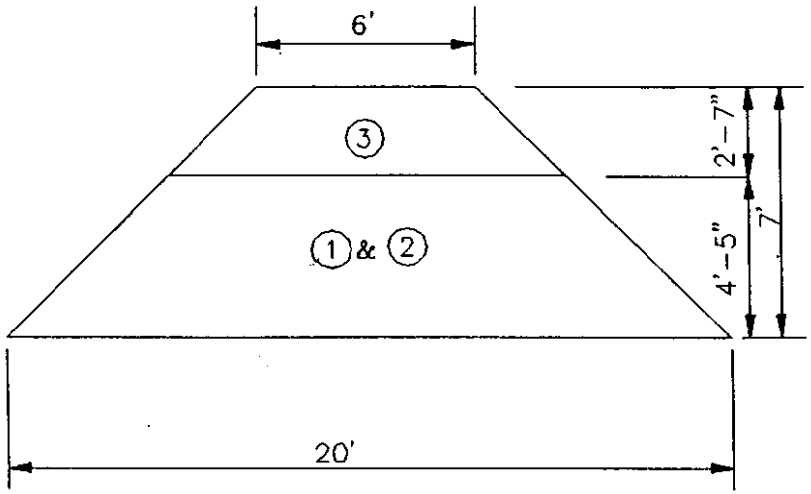

C

LEGEND

1. AMENDMENT BLEND
2. AMENDMENT BLEND
3. SCREENED SOIL

WINDROW FORMATION DIMENSIONS

MORRISON KNUDSEN CORP	
Drawing FIGURE	Rev. 1
Date 4/4/	Sheet 1

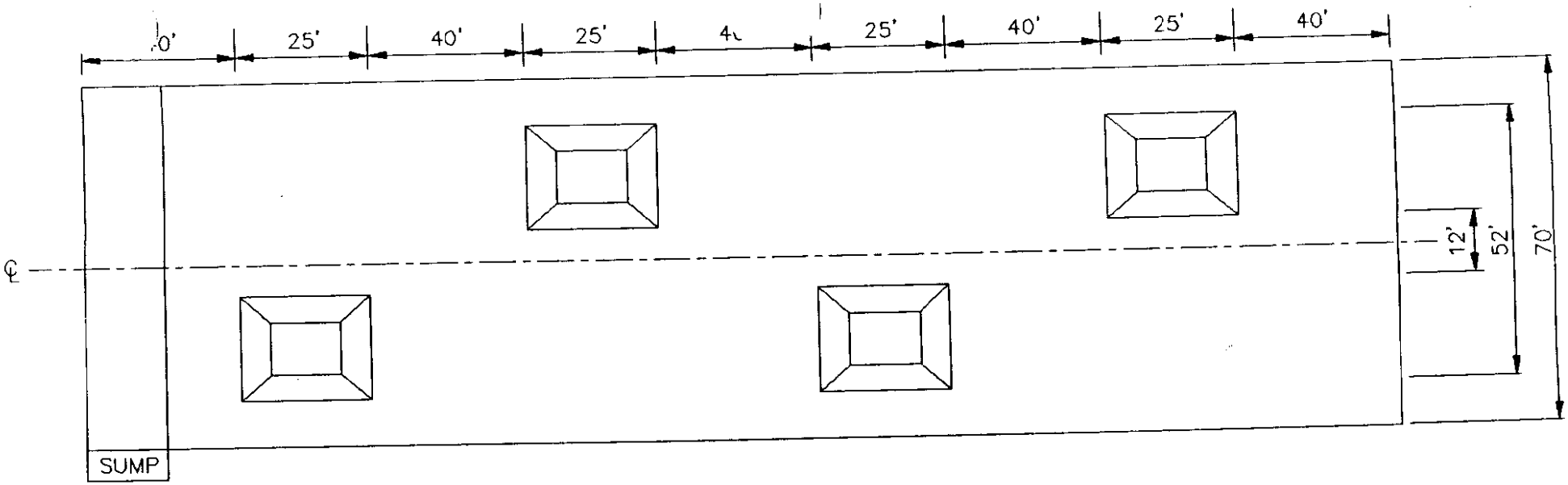

AMENDMENT PILES

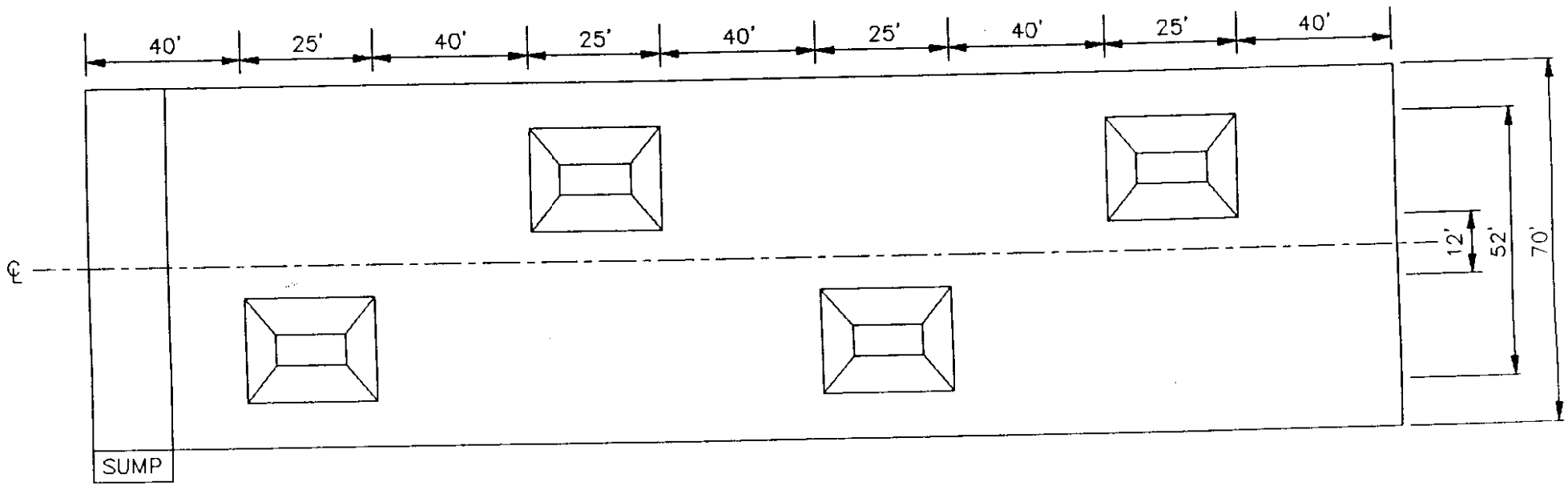

AMENDMENT WITH SOIL ADDED PILES

(FINAL FORM)

MORRISON KNUDSEN CORP	
Drawing Figure 6-4	Rev. 1
Date 4/4/97	Sheet 1

Liquids collected from the decontamination stations or storm water collection ponds may be used as moisture addition during initial windrow formation only. Once mixing and initial sampling of the windrow has occurred, no additional potentially contaminated liquids will be added, only potable water will be used for moisture addition. Additional water supply sources (such as truck or trailer mounted tanks with spray wands) will be utilized, if necessary, when large amounts of water are required.

General building cleanliness will be maintained by using the front end loader and/or the skid steer loader to collect stray compost materials and reform the piles, if necessary. Brooms and shovels will be used in inaccessible areas. Any ponding liquid will be manually moved to the sump within 24 hours. The windrows will be kept segregated, well-formed, and identified with signs containing the mix number, quantities of ingredients, and date formed.

Dust is not expected to be generated during the composting operation due to the high moisture content of the compost material. Vapor and odor are not expected to impact air quality during composting activities because the use of open-ended buildings will maintain proper ventilation.

6.8 LANDFILL PERMITTING

An application for a Minor Modification to the existing landfill permit will be submitted to IDEM. This modification is required to obtain approval for using finished compost material as a landfill daily cover material. Analytical data from the pilot scale treatment will provide the necessary data for this permit.

6.9 UNLOAD WINDROW AND TRANSPORT FOR DISPOSAL

Once the treatment goals have been met, as determined by confirmation sampling the building will be emptied. The loader will transfer successfully treated material only, directly from the windrows to the semi-tractor live bottom trailers. The trailers will be free of contaminated soil prior to loading the remediated soil/compost mix. Once loaded and tarp covered, the trucks will proceed to one of the empty buildings. The completed compost will be unloaded and stored in discrete, segregated piles until the pilot scale test results have been verified for disposal. The material will then be transported to the on-site landfill disposal area for use as daily cover.

Should the compost material explosive concentrations exceed the pilot scale remedial goals, a contingency plan will be put into effect as described in Section 8.2.7.

7.0
AUXILIARY SYSTEMS DESCRIPTION

7.1 ANALYTICAL SERVICES

Analytical services will be required for the process parameter monitoring and constituent concentrations. The following paragraphs describe the on-site and off-site services. A more detailed description of these activities is provided in and required by the approved Pilot Scale Biofacility QAPP and in the Field SOPs provided in Appendix D.

7.1.1 Field Screening Services

The following process parameters will be monitored, using field instruments as described in Field SOP 1.0 in Appendix D, at the Biofacility during the treatment process as part of the Pilot Scale test:

- Temperature
- Moisture Content
- pH
- Oxygen

Process parameters listed above are further described in Section 8.0. **Thermophilic bacteria testing shall be performed, if possible, to determine the quantity and type of organisms in the piles.**

Atmospheric combustible gases, ammonia, carbon dioxide, carbon monoxide, and hydrogen sulfide will also be monitored for personnel safety as described in Section 15.0.

Measurements that affect the quality of an activity or operation will be taken only with kits, instruments, tools, gauges, or other measuring devices that are controlled, calibrated, adjusted and maintained at predetermined intervals to a specified accuracy. The calibration and maintenance of field monitoring equipment and instrumentation will be in accordance with Field SOP 1.0 provided in Appendix D, and shall be documented in the Field or Site Safety and Health Logbooks, as applicable. Air monitoring equipment used for personnel exposure monitoring will be calibrated prior to use, or after long periods of non-use during the day as described in the SSHP.

Preventive maintenance programs will, at a minimum, be established for equipment that would otherwise be subject to breakdown, when the breakdown could lead to safety hazards, environmental contamination, or loss of completeness and accuracy in data. Field SOP 1.0 in Appendix D, provides the maintenance and calibration requirements to be performed for field instrumentation.

7.1.2 Analytical Laboratory Services

Off-site laboratory analysis of soil and water samples collected from compost or wastewater at the Biofacility and from excavations at Mine Fill A will be in compliance with methods and procedures defined in the approved Pilot Scale Bioremediation Facility QAPP.

7.2 DECONTAMINATION

During site activities, all personnel shall minimize contact with contaminated materials to keep "clean" during site activities. All personnel should minimize kneeling, splashing, and inadvertent physical contact with contaminated materials. Field procedures will be developed to control over spray and run-off and to ensure that unprotected personnel working nearby are not affected.

Entrance to the exclusion zones will be limited to personnel trained in accordance with 29 CFR 1910.120. The level of protection worn within each exclusion zone will be specified by the Site Safety and Health Officer (SSHO). Selection of personal protective equipment and anticipated levels of protection are summarized in Tables 5 and 6 of the SSHP. All personnel leaving the exclusion zone will pass through a decontamination zone and follow personnel decontamination procedures as specified in the SSHP.

Decontamination will be required for excavation equipment, gravel and rocks, dump trucks, operating equipment, and personnel. The following paragraphs describe these activities.

7.2.1 Excavation Site Equipment and Rock Washing

Prior to exiting the excavation site, loaded trucks will be inspected for exterior cleanliness. Each truck exterior and wheels will be protected with plastic lining during soil loading; and, therefore, should not need to be decontaminated. However, in case of accidental spillage of contaminated soil onto the truck exterior or if the truck is driven over a contaminated area, the decontamination process will take place. The excavation site decontamination facility is described in the Soils Excavation Plan provided in Appendix E. The equipment decontamination procedure is described in detail in Field SOP 3.0 provided in Appendix D.

Periodically, the need for washing of gravel and/or rocks will occur when excavating in roadway areas, near building foundations, or rocky terrain. The rocks and boulders in the oversized material pile rejected from the soil screening process will be sorted out from the soil clumps and woody vegetation as described in the Soil Excavation Plan provided in Appendix E. The Soil Excavation Plan describes the excavation boundaries, staging areas, decontamination of equipment, facility, and process of soil screening. The separated rocks or gravel will be loaded into a front-end loader bucket and taken to the decontamination pad. The rocks and or gravel will be thoroughly washed of all visible signs of soil with the high-pressure, low-volume spray wash unit. Final rinse samples will be collected and analyzed to determine the cleanliness of the

washed rocks. If the rinse water does not contain detectable levels of explosives, the washed rocks will be stockpiled in a clean area for use as natural backfill material or as designated by the U.S. Navy. The cleaned gravel will also be stockpiled for use as natural fill material.

7.2.2 Biofacility Truck and Equipment Washing

In order to minimize the tracking of potentially contaminated materials, trucks and other heavy equipment operating inside the compost buildings will be decontaminated prior to exiting the Bioremediation Facility as described in Field SOP 3.0 found in Appendix D. The trucks or heavy equipment will be inspected for exterior cleanliness. All loose dirt shall be swept or brushed off the vehicle exterior. The vehicles will enter a covered staging area where the wheels, wheel wells and other visibly contaminated areas will be washed with a high-pressure, low-volume water spray using a hand held wand connected to an overhead high-pressure supply line ~~pivoting at the center~~. This design enables the operator to ~~walk completely around the vehicle to~~ clean all sides **of the vehicle**. Operators will be trained to avoid potential over spray out of the building or over the walls. **And, personnel will avoid over spraying at the boot wash area.**

At completion of the Pilot Scale tests, equipment will be decontaminated at the vehicle wash area located at the facility exit. In addition to the typical washing requirements specified above, all other areas exposed to potentially contaminated materials will be washed and inspected. This includes truck beds, loader and backhoe buckets, etc. Final rinse samples will be collected and analyzed to determine the cleanliness of the equipment.

All wash fluids will be collected in the vehicle wash area sump. The wash water will be collected and stored in poly tanks or transported to the compost buildings for use as initial process water. Sediments will be collected and added to the windrows at the beginning of a compost cycle during initial windrow formation. No contaminated soil, sediments, or wash water will be added to the compost piles once the initial windrow sampling has been performed.

7.2.3 Personnel Decontamination Shower Trailer

A personnel decontamination trailer is located next to the equipment decontamination facility and consists of a change room area, lockers, lavatory, toilets and showers. The northern end of the trailer serves as a lunch/conference room. The trailer sanitary sewer line is routed to the pump/lift station in the office/laboratory area.

7.3 WATER/FLUID COLLECTION AND DISPOSITION

7.3.1 Compost Building Sump Water

Each of the three structures is equipped with an epoxy-coated sump for collection of any excess water in the building. The building sump water will be collected, stored in polyethylene (poly) storage tanks, if necessary, and recycled in the treatment process for compost moisture control. See Process Flow drawings 4324-0009-01-A and 01-C in Appendix C. Any sediments collected in the building sumps will be removed and added

to the windrows at the beginning of the compost cycle. No contaminated soil, sediments, or wash water will be added to the compost piles once the initial windrow sampling has been performed.

7.3.2 Truck and Equipment Decontamination Water

All wash fluids collected in the vehicle wash area sump and the excavation site equipment wash area will be collected and stored in poly tanks or transported to the compost buildings for use as initial process moisture addition. No contaminated soil, sediments, or wash water will be added to the compost piles once the initial windrow sampling has been performed. In the unlikely event that all the wash water is unable to be used in the compost process, the excess wash water will be stored in poly tanks and sampled for disposal. The method of disposal will be primarily at the on-site water treatment facility at Rockeye or Mine Fill A. See Process Flow drawings 4324-0009-01-B and 01-C in Appendix C. A secondary disposal method will be to use an off-site disposal facility, as approved by the U.S. Navy. Sampling frequencies, procedures, and analytical methodologies are contained in Section 4.0 of the approved Pilot Scale Biofacility QAPP.

7.3.3 Storm Water Diversion and Retention Pond Water

The facility will utilize both the existing topography and site drainage controls to control storm water run-off and run-on.

Two lined storm water retention basins sized to store rainfall from a 10-year, 24-hour storm will be constructed inside the Bioremediation Facility perimeter. These retention basins will retain and store storm water from the area paved with asphalt inside the facility. Pond #1 will retain a maximum of 428,000 gallons of storm water and pond #2 will retain a maximum of 407,000 gallons. A peak discharge flow to the local drainage swales will vary from 315 gallons per minute (gpm) at full level to 160 gpm at low level allowing for controlled off-site storm water discharge. Water collected in the retention basin will be sampled immediately following a storm to determine whether the water meets off-site discharge requirements. Water not meeting off-site discharge requirements will either be recycled in the compost building for initial windrow compost moisture control or transported to the water treatment facilities located at Mine Fill A or Rockeye. Sampling frequencies, procedures, and analytical methodologies are contained in the approved Pilot Scale Biofacility QAPP. **The discharge pipes from the ponds shall remain closed and locked until discharge is approved. At no time shall the operators of the facility allow the ponds to have less than 2 feet of freeboard. If the freeboard comes close to that limit and a storm event is anticipated, the U.S. Navy EPD Representative shall be immediately notified.**

8.0
PROCESS PARAMETERS AND MONITORING

Process control monitoring shall be performed during composting activities. Critical monitoring shall be documented using task-specific formats. General conditions may be noted in project log books or daily reports. For consistency, all monitoring and sampling shall be performed at pre-determined locations within each windrow. Sample locations other than those that are pre-designated shall be clearly identified in the field log book. The following sections identify the requirements for the non-contaminant parameters to be monitored. Sample locations and frequencies for contaminant parameters are described in Section 4.0 of the approved Pilot Scale Biofacility QAPP. Calibration of all field instrumentation will be performed daily prior to use as specified in Field SOP 1.0 found in Appendix D. Recalibration will be performed as required.

The full scale interim measures cleanup goals will be established based on data provided during the pilot scale operation. The recipes will be employed using 25% soil and variations of amendments. It is expected that some recipes will perform better than others. The recipe which provides the best performance in terms of explosive contaminants reduction with shortest process time and the lowest cost will be selected for use in the full scale operations. Those windrows whose recipes fail to meet pilot scale performance goals will remain in **one** the building**s** until they can be reintroduced in the full scale operation, mixed with amendments based on the successful recipe, and be re-treated in order to meet the established full scale cleanup criteria.

If all pilot scale tests fail and no mix meets the performance goals, the U.S. EPA Region 5 Coordinator shall be notified and new bench scale testing will be required.

8.1 PROCESS PARAMETERS

The process parameters essential to successful biodegradation of the explosive contaminants are listed in Table 8-1. The parameters will be measured and monitored as described in Section 8.2 of this Operational Plan. All in-situ measurements (i.e., temperature, oxygen level) will be taken prior to removing sample material for other measurements or analyses. These process parameters apply to both clean soil and contaminated soil testing. If process parameters fail during clean soil tests, the decision may be made by the U.S. Navy and **the** U.S. EPA to delete that mix from further testing. If process parameters fail during contaminated soil tests, the decision may be made by the U.S. Navy and **the** U.S. EPA to continue testing if degradation is evident.

8.2 PROCESS MONITORING

All in-situ process parameters such as temperature and oxygen, will be ~~,monitored in undisturbed compost, i.e.~~ **measured** prior to sample extraction so as to obtain representative levels **of** the measured parameter. Adjustments to the process for temperature, oxygen, and moisture will be performed pending the monitored results. The adjustments will be made based on predetermined contingency process methods discussed in the following sections. Figure 8-1 shows the decision paths for instituting the contingency process methods.

TABLE 8-1 NON-CONTAMINANT PROCESS PARAMETERS	
Process Indicators	Operating Range
Temperature	25 to 60 °C
Moisture	40 to 60 % (MWHC)[1]
pH	5.5 to 9.0
Carbon : Nitrogen	Various[2]
Oxygen	5 to 20%

[1] Denotes Maximum Water Holding Capacity
[2] C:N will be monitored for change only and will not be adjusted. C:N will vary based on mixture selection.

8.2.1 Temperature Monitoring

Temperature is one of the most important monitoring parameters since it is a primary indicator of successful achievement of conventional thermophilic composting operations in the windrows. The process goal is to maintain average windrow temperatures near 55°C for at least two weeks. The average pile temperature rises to the temperature range of 25 to 40°C within the first few days of formation, continues rising to within the temperature range of 40 to 65°C, and maintains that temperature range for at least two weeks. Based on conventional composting practice, such temperatures indicate a healthy, metabolically active windrow. Temperature decrease over time below 50°C is viewed as an indicator of a pile that is nearing the end of its operation (Weston, 1993).

The temperature of each windrow shall be monitored daily. Temperature readings will be taken before and after each turning of the windrow, at the core and near the surface. Temperature readings shall be taken at six sampling/monitoring locations at each of the cross-sections using a hand-held compost temperature probe and indicator as specified in Field SOP 1.0 in Appendix D. These locations are selected to provide representative temperature profiles of each cross-section in the windrow for the inner core and outer near-surface conditions.

Ambient air temperature and humidity inside the buildings shall be monitored daily during any composting activities using a standard alcohol or mercury thermometer and a hygrometer. The thermometer will incorporate a degrees Celsius scale. All temperature and humidity measurements shall be recorded in the field log book. Temperature monitoring equipment will be calibrated as specified in Field SOP 1.0 in Appendix D.

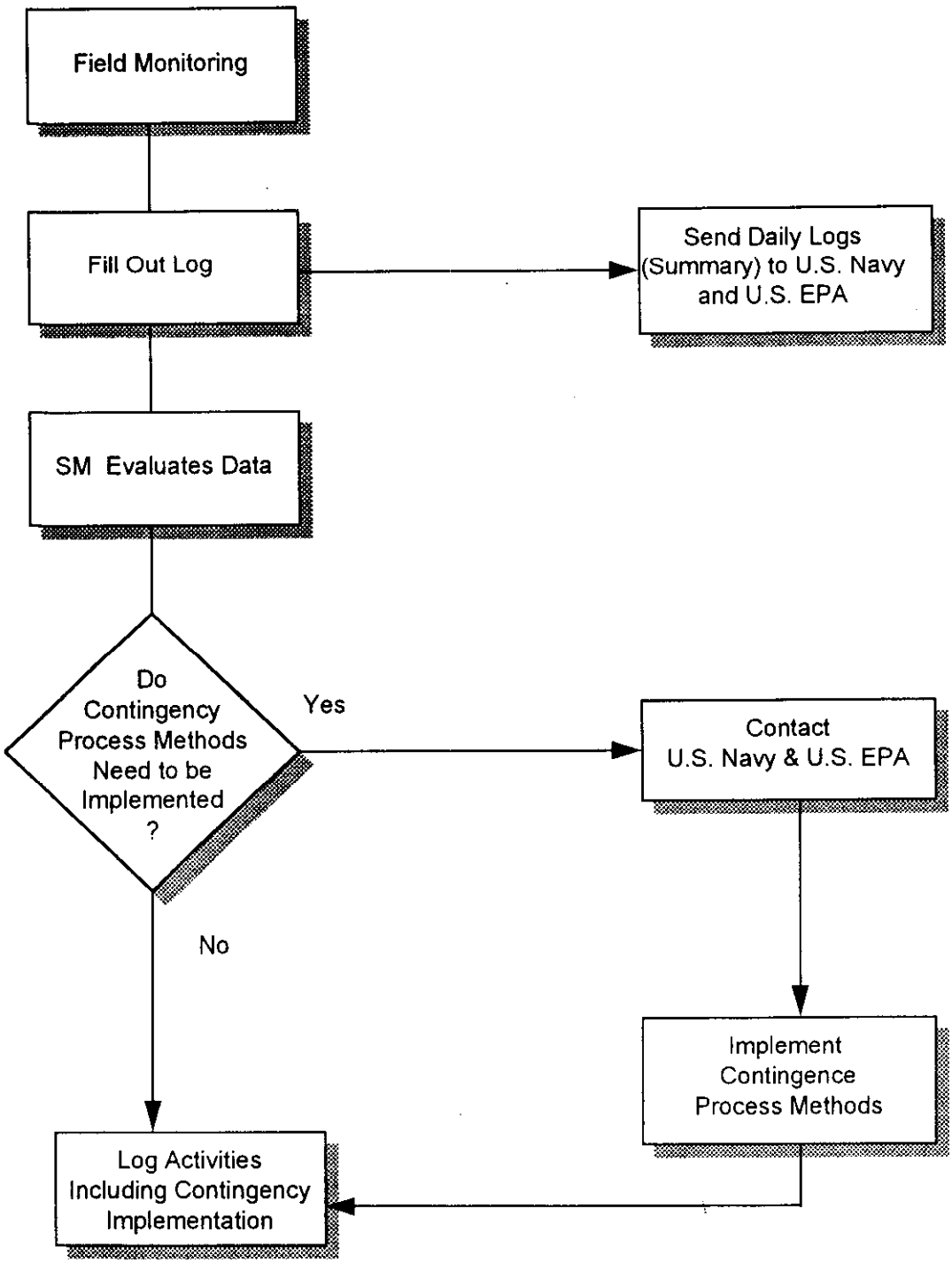

FIGURE 8-1
DECISION FLOW CHART

The following contingency plans are related to temperature monitoring:

~~1. If, after two weeks, the average temperature fails to reach 40° C in a clean soil test, then the decision may be made by the U.S. Navy and U.S. EPA to delete that mix from further testing~~ ~~**the mix will be eliminated from further testing.**~~

~~2.~~
1. If the moisture content is within the required range, and the oxygen levels are greater than 10%, and temperatures of the compost do not reach the thermophilic range of 40 to 60°C, and target levels of TNT, HMX, and RDX are not being degraded, then the recipe will be considered a failure. Reintroduction or alterations of amendments will not be performed without approval of the U.S. Navy and **the** U.S. EPA representatives.

~~3.~~
2. If the moisture content is within the required range, and the oxygen levels are less than 5%, and temperatures of the compost do not reach the thermophilic range of 40 to 60°C, and target levels of TNT, HMX, and RDX are not being degraded, then the windrow will be turned within 6 hours for additional aeration.

~~4.~~
3. If the moisture content is within the required range and the temperature at any monitoring location in the compost pile exceeds 70°C, then windrow turning will be performed within 6 hours in order to provide aeration and cooling. Temperatures greater than 60°C may be detrimental to microbial growth and explosives degradation will be reduced.

8.2.2 Moisture Level Monitoring

The operating goal for composting moisture content is 40 to 60% MWHC. If moisture levels are excessively low or high (beyond the typical ranges), proper composting and explosives degradation may be affected. Too little moisture will inhibit microbial movement and nutrient availability. Excess moisture will cause the moisture to fill the void spaces needed for proper aeration, thus reducing the oxygen level and aerobic microbial growth.

Moisture level monitoring will be performed three times per week prior to windrow turning, thereby enabling moisture to be added during the turning operation. If moisture is added to the windrows, moisture levels will be checked again after windrow turning. Moisture level samples will be collected from three locations at each cross-section as described in SOP 1.0 in Appendix D. The samples at each cross-section location will be composited for a total of four composited samples per windrow. The following moisture data will be determined per the procedure described in Field SOP 1.0 provided in Appendix D.

- Percent moisture.
- Water-holding capacity (i.e., percent moisture at saturation).
- Percent saturation.
- Percent water-holding capacity.

All moisture measurements shall be recorded in the field log book. The analytical balance equipment will be calibrated as specified in Field SOP 1.0 in Appendix D.

Moisture levels will be adjusted to the proper levels by water addition from any of three available sources:

1) Through a spray system integral to the windrow turner machine, **or**

2) By direct spray from a low pressure potable water supply hose, or

3) By direct spray of recycle water (~~decon water~~, **building sump water,** storm water, etc.) from a collection tank supply hose**, only at the initial compost creation stage.**

Moisture addition during the initial windrow formation may utilize the recycle water sources, however once the process has been initiated and sampling has been performed, only a potable water source will be used for moisture addition. **Equipment decontamination water using soap or other chemicals shall NOT be used as recycled water.** Excess moisture will be adjusted by increasing the turning frequency thereby driving off excess moisture by aeration.

The following contingency plans are related to moisture level monitoring:

1. If the moisture content is below 40% of the MWHC, then moisture addition will be performed during the windrow turning process. The decision to add moisture will be based on the moisture content analysis results as described in Field SOP 1.0 in Appendix D. Due to variability of density between different recipes and changes in volume and density during the composting process, it is not possible to provide generic guidance for the quantity of water to be added for moisture adjustment. Based on initial windrow volumes and average densities, approximately 67 gallons of water will raise the moisture content by 1% for a typical windrow. To avoid adding too much moisture, no more than 100 gallons will be added to any windrow prior to an additional moisture content analysis.

2. If the moisture content is above 60% MWHC, and the windrow temperature is below 45°C, then additional windrow turning will be performed to provide aeration and drive off excess moisture. If the moisture content cannot be reduced and the windrow fails to sustain temperatures in the thermophilic range (above 40°C), then the pile will be considered a failure. Reintroduction or alterations of amendments will not be performed without approval of the U.S. Navy and **the** U.S. EPA representatives.

8.2.3 pH Level Monitoring

It is anticipated, based on experience at UMDA and WES, that the pH will steadily increase from near neutral to a level as high as 8.8 within weeks of operation and then decrease to a level between 7 and 8. Levels of pH are not intended to be adjusted during treatment. Acidic pH values below 5.5 will be alleviated by the aeration and increasing oxygenation to avoid anaerobic conditions and acid formation. Reintroduction or alterations of amendments for the purpose of pH adjustment will not be performed without approval of the U.S. Navy and U.S. EPA representatives.

Samples for pH level monitoring will be collected at location #1 for each of the four cross-sections, once per week, prior to turning, as described in Field SOP 1.0 found in Appendix D. The pH monitoring equipment will be calibrated as specified in Field SOP 1.0 in Appendix D.

The following contingency plan is related to pH level monitoring:

> If pH is less than 5.5 or greater than 9.0, then pH monitoring frequency and locations may be increased based on U. S. Navy and U.S. EPA recommendations.

8.2.4 Total Organic Carbon Level Monitoring

Carbon and Nitrogen are the primary nutrient sources for microbial growth. Total Organic Carbon (TOC) will be monitored for the purpose of tracking the carbon to nitrogen (C:N) ratio during the composting process. The C:N ratio is not intended to be adjusted. Reintroduction or alterations of amendments for the purpose of TOC adjustment will not be performed without approval of the U.S. Navy and **the** U.S. EPA representatives.

Samples for TOC analysis (EPA method 9060) shall be collected from each of the sampling/monitoring cross-sections, at locations 1, 2, and 3, on days ~~0, 7, 14, 21 and 28~~, **0, 5, 10, 20, 30, 40, and 60** of the windrow life cycle after complete mixing by the windrow turning machine has been performed, as described in Field SOP 2.0 in Appendix D. Sampling and analysis requirements for TOC level monitoring shall be performed as described in the approved Pilot Scale Biofacility QAPP.

8.2.5 Nitrogen Level Monitoring

Carbon and Nitrogen are the primary nutrient sources for microbial growth. Total Kjeldahl Nitrogen (TKN) levels will be monitored for the purpose of tracking the C:N ratio during the composting process. The C:N ratio is not intended to be adjusted. Reintroduction or alterations of amendments for the purpose of TKN adjustment will not be performed without approval of the U.S. Navy and U.S. EPA representatives.

Samples for nitrogen analysis (EPA method 351.3), as TKN, shall be collected from each of the sampling/monitoring cross-sections, at locations 1, 2, and 3, on days ~~0, 7, 14, 21, and 28~~ **0, 5, 10, 20, 30, 40, and 60** of the windrow life cycle after complete

mixing by the windrow turning machine has been performed, as described in Field SOP 2.0 in Appendix D. Sampling and analysis requirements for TKN level monitoring shall be performed as described in the approved Pilot Scale Biofacility QAPP.

8.2.6 Oxygen Level Monitoring

Typical compost oxygen levels for rapid degradation are greater than 5%; however, the preferred level is much greater than 5%. If sufficient oxygen levels are not maintained, proper microbial degradation may not occur, and thermophilic temperatures would not be maintained. Oxygen levels decline rapidly to very low levels (less than 5%) in a short time after mixing. Oxygen levels of less than 1% indicate the process is approaching anaerobic conditions, and aeration is required.

Oxygen level monitoring will be performed at the same locations and frequency as the temperature monitoring activity using a hand-held probe and indicator as described in Field SOP 1.0 in Appendix D. Typical compost oxygen levels for rapid degradation are greater than 5%, however the preferred level is as high as 20%. All oxygen measurements shall be recorded in the field log book. Oxygen monitoring equipment will be calibrated as specified in Field SOP 1.0 in Appendix D.

The following contingency plans are related to oxygen level monitoring:

1. If it is necessary to adjust aeration (interstitial oxygen), then the turning frequency will be adjusted **based on temperature, if necessary.**

2. If moisture content is within the acceptable range, and the windrow temperature is falling and the oxygen content is below 5%, then windrow turning will be performed within the same day.

3. If, after thorough turning, the oxygen content is still below 5%, then the windrow may not have sufficient pore space (bulk) and will be considered complete or a failure. Reintroduction or alterations of amendments will not be performed without approval of the U.S. Navy and U.S. EPA representatives.

8.2.7 Explosives Level Monitoring

Explosives to be monitored are listed in Table 8-2. Samples for laboratory analysis (U.S. EPA SW846 Method 8330) will be collected from each of the sampling/monitoring cross-sections, at locations 1, 2, and 3, on days 0~~, 7, 14, 21, and 28~~ **0, 5, 10, 20, 30, 40, and 60** of the windrow life cycle after complete mixing by the windrow turning machine has been performed, as specified in Field SOP 2.0 in Appendix D. Sampling and analysis requirements for explosives level monitoring shall be performed as described in the approved Pilot Scale Biofacility QAPP.

TABLE 8-2 EXPLOSIVES PROCESS PARAMETERS	
Compound	Compound
TNT	2-Am-DNT
RDX	2,4-DNT
HMX	2,6-DNT
TNB	2-nitrotoluene
1,3-DNB	3-nitrotoluene
Nitrobenzene (NB)	4-nitrotoluene
4-Am-DNT	Tetryl

All analytical results will be reviewed and compared to the performance goals as established in Section 1.2 of this plan. If the goals have not been reached, the mix is considered a failure. Those windrows whose recipes fail to meet pilot scale performance goals will remain in a Bioremediation Facility building until they can be reintroduced in the full scale operation, mixed with amendments based on the successful recipe, and be retreated in order to meet the established full scale cleanup criteria.

If performance goals have not been met for any of the pilot scale mixes, then the U.S. EPA Region 5 Project Coordinator and the U.S. Navy will be notified and additional bench scale testing may be required to provide recipe alterations for pilot scale operations.

8.2.8 Metal Contaminants Monitoring

Samples for laboratory analysis will be collected from each of the sampling/monitoring cross-sections at locations 1, 2, and 3, on days 0 and ~~28~~ **60** (or completion) of the windrow life cycle after complete mixing by the windrow turning machine has been performed, as specified in Field SOP 2.0 in Appendix D. Sampling and analysis requirements for selected metals and TCLP metals shall be performed as described in the approved Pilot Scale Biofacility QAPP.

The analytical results will be reviewed to determine the before and after effects of composting on the metals leachability levels as well as provide analytical results for the Landfill Minor Permit Modification discussed in Section 6.8.

If the metals levels do not meet **S**tate landfill permit requirements, then the U.S. Navy and U.S. EPA will be notified and the **A**gencies will make a disposal determination.

8.2.9 Air Monitoring

In addition to the process control monitoring, atmospheric air monitoring and sampling will be conducted to meet the requirements of the Site Safety and Health Plan developed for Operations at the Biofacility. Gas sampling will include volatile organics, oxygen level (percent volume), hydrogen sulfide, carbon monoxide, carbon dioxide, ammonia, oxides of nitrogen, nitrous fumes, formaldehyde, total dust, metals as an aerosol, explosive residues as an aerosol, and biological agents as an airborne aerosol. The industrial hygiene air monitoring and sampling campaign is discussed in Section 15.0.

9.0
SAMPLING AND ANALYSIS

All sampling and analysis will be performed as described in this Section and the approved Pilot Scale Biofacility QAPP. The QAPP describes sampling and analysis procedures including laboratory methodologies and Quality Assurance/Quality Control requirements for the following activities:

- Compost windrow sampling requirements for contaminants.
- Fluid collection systems sampling requirements for storm water and decontamination water.
- Pre- and Post-excavation soil sampling requirements
- *Health and Safety air sampling.*

Table 9-1 summarizes the parameters to be monitored and the sample frequency described below. Appendix D of ~~the~~ **this** Pilot Scale Operational Plan contains field process parameter SOPs.

9.1 COMPOST WINDROW SAMPLING

The three composting structures at the facility shall be numbered Buildings 1 through 3. Within the buildings, the pilot scale windrows shall be numbered consecutively.

For sampling and monitoring purposes, four cross-sections, lettered A through D, shall be established along each windrow. Cross-section A shall be five feet from the end of the windrow nearest the Facility work area (northeast end). Cross-section D shall be five feet from the end of the windrow furthest from the Facility work area (southwest end). Locations B and C shall be evenly spaced between locations A and D as shown on Figure 1-1, in Field SOP 1.0 in Appendix D. At each cross-section, six sampling/monitoring points shall be established as described in Field SOP 2.0 in Appendix D.

9.2 FLUID COLLECTION SYSTEMS SAMPLING

Various liquids may be collected throughout the facility including compost process leachate, storm water, and decontamination water. These liquids are expected to be used as sources of process water for the initial compost windrow formation. Additional quantities of waste water generated during the project will be sampled for discharge or disposal, as required. The frequency of liquid sample collection will depend on the quantities generated or collected. The sampling parameters are listed in Table 9-1.

TABLE 9-1 SAMPLING AND ANALYSIS SCHEDULE[1]			
Matrix	Parameter	Frequency	Method
1. Pre-excavation soil	Explosives per Table 8-2; Totals & TCLP metals, VOCs & TCLP list VOCs per QAPP	2 composites per 20' x 20' grid block; one grab sample (VOCs)	Method 8330, 6010, 1311, 7470 & 8240.
2. Post-Excavation soil	Per Table 8-2; Totals of site-specific metals & VOCs per QAPP	Base: 1 composite and one grab per 20' x 20' grid block Sidewalls: 1 composite and 1 grab per 20'	Laboratory (various)
3. Windrow compost	Per Table 8-2, TOC, TKN	1 sample per location per cross-section: Day ~~0, 7, 14, 21, 28~~ **0, 5, 10, 20, 30, 40, 60**	Laboratory (SW846 8330, EPA 9060 & 351.3)
4. Windrow compost	TCLP & Totals of site-specific metals per QAPP	1 sample per location per cross-section: Day 0 & ~~28~~ **60**	Laboratory (SW 846 6010, 1311, & 7470)
5. Windrow compost	Temperature	Daily: before & after turning	Field SOP 1.0 in Appendix D
6. Windrow compost	Moisture	Three times per week and directly after moisture addition	Field SOP 1.0 & 2.0 in Appendix D
7. Windrow compost	pH	One time per week	Field SOP 1.0 & 2.0 in Appendix D
8. Windrow compost	Oxygen	Daily: before & after turning	Field SOP 1.0 in Appendix D
9. Storm water	Per NPDES	After heavy rainfall	Laboratory (various)
10. Decon/wash water	Per POTW influent requirements	As required for disposal	SW846 8330 & POTW parameters

Notes:
1. Complete sampling and analysis procedures and details are provided in the Biofacility Pilot Scale QAPP.

9.3 PRE-EXCAVATION SITE SAMPLING

This task has three specific objectives:

Objective 1: Identify areas for pilot scale excavation. Analyze the soil, primarily in the vicinity of Building 153 or Building 158 (backup in case Building 153 cannot be used during the Pilot scale) for explosives. Additional excavation at Mine Fill A will be completed during Full Scale Operations. This data will also be used as "entry " or "startup" concentrations for composting.

Objective 2: Determine if site-specific waste products are present. Site specific VOCs are methylene chloride, acetone, methyl ethyl ketone, methyl isobutyl ketone, toluene, and xylene. Site specific metals are barium, cadmium, chromium, and lead. These constituents will serve as indicators of the presence of residual paint wastes or rotary grit blasting waste.

Objective 3: Determine if soil is hazardous with respect to metals and TCLP list VOCs. Soil will not be accepted into the Biofacility for treatment if it is hazardous with respect to these constituents.

These three objectives will be met by collecting soil samples in a general area where high levels of explosives have been previously detected (in Figure 1-2). Soil samples will be collected and analyzed for explosives; site-specific VOCs and metals; TCLP-metals; and TCLP list VOCs. This data will assist in identifying areas for Pilot scale excavation. This data will not be used to define the extent of contamination.

9.3.1 Sampling Areas

Primary sampling areas will be designated north and northeast of Building 153 (in Figure 6-1). These areas encompass an earthen berm around Building 153 which is contaminated with explosives, based on previous sampling results. Additional sampling areas, north and east of the turn-around road will be gridded using a 20-foot spacing. Areas around Building 158 will also be sampled, if necessary, to meet the 200 cubic yard requirement for excavation.

Grid layout and boundaries will be affected by the presence of buildings, utilities, etc. Grid borders will be flagged in the field, and areas will be chosen which will be accessible by heavy equipment (i.e. individual grid blocks will not be placed in the midst of heavy utilities or surface structures). Grid blocks are not expected to be perfectly square (i.e. those in the berm), but should roughly represent a 20-foot by 20-foot area. Assuming two feet of soil will be excavated, each 20-foot by 20-foot area or "grid block" may represent approximately 30 cubic yards of soil.

9.3.2 Soil Sampling

Soil samples will be collected from each grid block or sampling area shown in Figure 6-1. Five grab samples will be collected: one from the center and one from near each of the four corners of each grid block. Grab samples will be composited using a procedure which will provide a more representative sample, as explosives contamination is known to vary over short distances (U.S. EPA, 1996c). A total of two composites, one for the six-inch depth and one for the two-foot depth, will be collected per grid block. Each composite sample will be analyzed for metals (barium, total chromium, lead, cadmium), TCLP-metals and explosives. A minimum of one sample for volatile organics analysis will be collected from the center of each grid block and will not be composited.

9.3.3 Marking Grid Blocks for Excavation

Explosives data will be used to mark grid blocks or sampling areas as requiring excavation. If a grid block or sampling area shows contamination (> 30 mg/kg TNT or RDX) to a depth of three feet, the grid block or area will be marked for three feet of excavation. If a grid block or area shows contamination at the one foot depth only, the block or area will be marked for one foot of excavation. If a grid block shows no contamination at one foot nor at the two-foot depth, additional grid blocks will be sampled. Sampling will continue until enough soil is "marked" for excavation (200 cubic yards minimum for pilot scale).

9.4 POST-EXCAVATION SOIL SAMPLING

Once soil boring sampling is completed, and the results reviewed, a minimum of 200 cubic yards will be excavated for the Pilot scale test. Additional soil excavation at Mine Fill A will be deferred to the Full Scale Operations phase.

Once soil has been removed, the Pilot scale excavation at Mine Fill A will be sampled and temporarily backfilled from an approved source at Crane. The on-site borrow source has previously been sampled and approved based on analytical results which will be supplied prior to temporary backfilling operations.

The purpose of sampling the excavation is to determine the level of contamination remaining, with respect to explosives, totals of site-specific metals and site-specific VOCs. A sampling grid will be laid out along the base of the Pilot scale excavation(s), using a nodal spacing of 20 feet. Each 20-foot by 20-foot grid block will be sampled using procedures described in the QAPP for pre-excavation sampling. However, only one composite sample and one grab sample (for VOCs) will be collected from each grid block. The composite sample will be analyzed for totals of site-specific metals (barium, cadmium, total chromium and lead) and explosives, and will be collected from the 6-12 inch interval in a manner similar to pre-excavation composite samples. The grab sample will be analyzed for site-specific VOCs, and will be collected from the center of the grid block, 12-18 inches below ground surface, using a drive sampler.

Pin flags will be placed every 20 feet along sidewalls greater than one foot in depth. Samples will be collected at each pin flag location, using a drive sampler. One sample will be collected from 6-12 inches below the surface and analyzed for site-specific metals and explosives analysis. One sample will be collected from 12-18 inches below the surface for site-specific VOCs analysis.

Data generated during this activity will be used during the Full Scale Operations to guide further excavation at Mine Fill A.

9.5 Health and Safety Air Sampling

Air monitoring for particulate and harmful or explosive gases is discussed in detail in the SSHP in Appendix A.

9.6 Process Parameter Sampling

Process parameter sampling and analysis requirements are discussed in the QAPP Supplement in Appendix F.

10.0
OPERATING EQUIPMENT DESCRIPTIONS

Table 10-1 below provides a list of the major operating equipment that will be used at the excavation sites and composting facility.

TABLE 10-1
OPERATING EQUIPMENT

Equipment	Qty.	Specifications	Description/Use
Portable Soil Screener	1	Minimum 50 ton/hr capacity; screen material to 1-1/2 inches; with feed hopper and discharge conveyor	Screening contaminated soil at the excavation sites.
Semi-tractor Truck and Live Bottom Trailer	2	Minimum 48 cu. yd. capacity, conveyor rear discharge trailer. 0 to 450 cu. ft./hr.	Hauling contaminated soil from the excavation site to the composting facility. Hauling treated material to the disposal site.
Hopper/Conveyor System	1	150 ton/hr capacity.	Self powered side discharge conveyor for loading soil onto windrow; towed by Live Bottom Trailer.
Backhoe/Loader	1	3 - 4 cu. yd. bucket loader	Excavating material, loading screen, and loading trucks at the excavation sites.
Steer Skid Loader	1	½ to 1/3 cu. yd excavator	Excavating material in areas of limited access and cleaning isles between windrows.
Grinder/Mixer	1	700 cu.ft. capacity tractor PTO driven, Grinder/Mixer with side discharge conveyor	Grinding and mixing of amendments prior to forming windrow
Tractor	1	Agricultural farm tractor with loader, bale handler and spear attachments	Moving and unloading bales & manure, towing grinder/mixer unit.
Center Pivot Wheel Loader	1	6-7 cu. yd. bucket center pivot loader with claw attachment	Loading amendments into grinder/mixer, and unloading windrows into Trucks and adjusting shape of windrows.
Water Tank Truck	1	1000 gallon (minimum)poly tank, truck mounted with valve and pump	For collecting and transporting decon liquids to site treatment facility or to compost buildings
Water Tank - Stationary	1	1500 to 2000 gallon poly storage tank with discharge valve	For storage of decon fluids awaiting analytical results.
Portable High Press Spray Wash Unit	1	1500 to 2400 psi portable gas powered spray wash unit.	For decontamination of trucks, equip., and rocks at the excavation site.
Portable Suction Pumps	3	50 gpm self priming suction pump	For pumping out building, decon facility, and storm water retention pond sumps.
Composter	1	Self-propelled, 20 foot windrow straddle type composting machine	Forming and turning windrows.
Explosives-contaminated Water Pumper Truck	1	Truck mounted 1000-gallon minimum steel tank with pump.	Transporting accumulated liquids to on-site treatment facilities

Additional equipment shall be leased as needed for short-term assignments. To minimize downtime of equipment, the program will include a schedule of important preventative maintenance tasks and lists of any critical spare parts. Daily, weekly, monthly, and periodic maintenance requirements for the major pieces of equipment are provided in Appendix G. Each major equipment operation and maintenance manual will be consulted for details.

11.0
QUALITY CONTROL

As prime contractor, MK will implement and ~~retain full authority of the Quality Control Plan (QCP) for this project. The QCP is a separate bound document and is found in Appendix H and is to be used in conjunction with this Operational Plan. MK will~~ manage all matters involving Quality Control performed in the execution of NAVFACENGCOM Delivery Orders. This approach provides the U.S. Navy with a quality management system having clear lines of authority and responsibility, and a consistent approach and application of quality requirements.

The QCP identifies quality testing and inspection requirements for the scope of work to be performed. To supplement the information contained therein, Appendix G of this Work Plan provides Field Inspection Checklists for general and specific items when performing inspections.

In addition, the NSWC EPD personnel will perform quality checks and inspections of the Contractors work and operation based on the approved Operational Plan. The U.S. EPA also retains the authority to perform quality checks and inspections.

12.0
WASTE MANAGEMENT

(NOTE: The original text was all deleted)

The U.S. Navy EPD Representative shall coordinate all waste management and disposal. The Contractors must comply with all U.S. Navy EPD requirements for management of any solid wastes, hazardous wastes, or contaminated

13.0
ENVIRONMENTAL PROTECTION

(NOTE: Most of the original text was deleted)

13.1 INTRODUCTION

All work will be done in a way that minimizes pollution of the air, the water, and the land. Within applicable regulatory requirements, noise and the disposal of solid waste materials and other pollutants will be controlled to protect human health and the environment.

The Pilot Scale Operation is divided into two areas; SWMU 12/14, Mine Fill A excavation and the Bioremediation Facility. These areas are described in Sections 1.3 and 5.0 of this Plan.

13.2. Dust Control

All excavations, stockpiles, access roads, and other work areas will be maintained free from excess dust to avoid causing a hazard. Dust at the site will be controlled with a wetting spray **from a potable drinking water source**.

13.3. Erosion and Sediment Control

Temporary erosion control measures, in accordance with the site's Pollution Prevention Plan, will be used in excavation areas until permanent surface drainage is reestablished. The amount of bare soil exposed at any time is not expected to exceed three acres, and the excavations will be protected when work is not in progress.

All erosion control structures in excavation areas are to be built to conform to site-specific conditions. Generally, erosion control structures will consist of berms, ditches, sumps or straw bale dikes. These structures will be maintained as often as required to ensure that sediment is minimally permitted to migrate and surface water is not allowed to enter or exit exclusion zones. Water contained and collected within the exclusion zones will be pumped to on-site storage tanks and handled as stated in Appendix E, Section 3.0.

The Bioremediation Facility will utilize two-lined retention basins to control surface/storm water. Water collected in the basins will be sampled and analyzed for discharge requirements. Details of the retention basin system are described in Section 5.6.

14.0
RECORDS AND RECORDING

Field personnel will generate and maintain detailed records of all site activities beginning with equipment and material receipt. A daily project logbook will be maintained on-site to document all relevant activities. General narrative descriptions of field activities will be included in the logbook along with any sketches needed to document field decisions. Field personnel will be responsible for ensuring that the log is current and thoroughly accounts for work accomplished.

In addition to the project log, pertinent data forms are prepared for accumulation of operating and monitoring data associated with both the composting and excavation portions of the project. The data forms will be used primarily to record monitoring information. The forms will be maintained in a three-ring binder in the office trailer at the Bioremedation Facility. Examples of the reporting forms are provided in the various Field SOPs in Appendix D. Additional forms may be amended to this plan as developed during the Pilot Scale test.

The general information recorded for each windrow will include: soil source, date excavated, and date placed, mix number, amendment quantities and types, moisture added, windrow dimensions, etc. Complete monitoring and sampling data will also be recorded for each windrow. Dates, locations, and results will be recorded for laboratory analyses and process parameter monitoring, including all items in Table 9-1. The windrow turning schedule and ambient temperature, wind, and humidity will also be recorded.

After the treatment of a windrow is complete, the date of removal and the general location of the interim storage area will be recorded on an Interim Storage Form (Appendix D). Reports will be generated as required by the Navy and regulatory agencies such as:

- Draft Pilot Scale Report - This report will include a summary of pilot scale operations, process adjustments, survey maps of the excavation area and field sample locations, temperature, moisture, and oxygen profiles, explosives degradation vs. time graphs, any approved deviations from the operational plan, analytical results summary, conclusions, and full scale operation recommendations.

- Final Pilot Scale Report - This report will include any additional information and revisions required to the Draft Pilot Scale Report for reporting the results and full scale recommendations.

- Initial Batch Report - This draft report will include the analytical and process data, operation summary and conclusions for the completion of the first batch of soil composting from Mine Fill A.

- Interim Progress Reports - These reports will include a summary of operations and analytical results, cubic yards of soil processed, process adjustments, etc., and will be submitted upon completion of the clean soil test and the contaminated soil tests.

- Daily Reports - These reports will include a summary of daily operations; monitoring logs; temperature, moisture, oxygen, and any other process parameter results; and analytical results upon receipt from the laboratory. The Daily Reports will be legible and faxed at the end of the business day to the U.S. Navy and **the** U.S. EPA.

- Photographic Documentation - Documentation will include color photographs and videos of the various stages of excavation, transportation, windrow formation, monitoring, windrow completion, and compost interim storage.

15.0
SITE SAFETY, HEALTH, EMERGENCY RESPONSE AND CONTINGENCY PLAN

15.1 SITE SAFETY AND HEALTH PLAN

The project's life cycle safety and health management, emergency preparedness and prevention, contingency planning and emergency procedures is established and is planned to be maintained in the Task-Specific SSHP. A special pilot scale SSHP document has been prepared which presents the initial industrial hygiene air monitoring and sampling campaign requirements and is provided in Appendix A.

After pilot scale, a full-scale operation SSHP will be prepared that includes all follow-on air monitoring and sampling campaign requirements and any specifics including lessons learned on process, equipment and operational changes. Minor revisions to the plan may be necessary in the areas of personnel decontamination (Section 10 of the SSHP), Emergency Response Plan and Contingency Procedures (Section 12 of SSHP), Spill Containment (Section 16 of the SSHP), and the Activity Hazards Analysis (AHA) worksheets found in Attachment A of the SSHP in Appendix A. New information will also be added on safety and health requirements applicable to the on-site laboratory trailer.

Weekly inspection checklists are provided in Table 5 of the SSHP in Appendix A. AHA worksheets may be revised based on field experience of Pilot Scale operation.

15.2 AIR MONITORING

Industrial hygiene air monitoring and sampling are described in Section 7.0 of the SSHP document. During excavation work, the presence of volatile organic compounds (VOCs) will be identified using a photo-ionization detector (PID) instrument. Further identification and quantification will be completed where necessary using colorimetric indicator tubes. VOCs are not expected to be a concern. During composting, indicator tubes will be available to assess ammonia, carbon dioxide, carbon monoxide, formaldehyde, hydrogen sulfide, nitrogen dioxide and nitrous fumes inside of the composting building. Ammonia is the only compound expected to be present that may be of concern. The levels of ammonia most likely will not exceed occupational exposure limits but can be present in concentrations that can cause upper respiratory irritation.

Airborne dust levels from fugitive emissions will be measured and assessed using a direct reading, real-time aerosol monitor. With engineering and administrative controls in place for dust, fugitive emissions are not expected to be a problem. The work site and the perimeter will be monitored on a daily basis.

A combustible gas/oxygen/toxic gas meter will be used to evaluate conditions prior to entering confined spaces, excavations, and other areas deemed appropriate by the SSHO. This instrument will have a readout and alarm for lower explosive levels (10% methane), oxygen level in percentage, as well as carbon monoxide toxic gas detection. This instrument, along with the colorimetric indicator tubes, will provide initial qualification and quantification of atmospheric conditions in each compost building.

15.3 AIR SAMPLING

The pilot scale industrial hygiene time integrated air sampling campaign will assess potential airborne occupational exposure to chemical and biological agents and will include both personal and area samples. Air sampling results will provide the basis for PPE upgrades or downgrades, assessment of engineering controls, and the need for any special administrative controls. Constituents include organics, metals, explosives residue as airborne aerosols, and biological agents.

Time-integrated air sampling for hydrocarbons will be completed in accordance with NIOSH Methods 1500, 1501, and 1003. During composting, two area samples for each method will be obtained inside of the composting building and outside (representing background). See Section 7.3.1 of the SSHP for materials and methods, and sampling strategy.

Time integrated air samples for metals will be completed in accordance with NIOSH 7300. Two personal samples will be obtained during soil excavation and screening tasks. Two personal samples will be obtained from the windrow machine operator and two area samples will be obtained inside of the composting structure. See Section 7.3.2 of the SSHP for material and method and sampling strategy.

Time integrated air samples for explosive residues as airborne aerosols will be completed based on OSHA 44 Method with laboratory analysis in accordance with EPA 8330 Method. Six personal samples will be obtained during soil excavation and screening tasks. Six personal samples will be obtained from the environmental technician. Six area samples will be obtained inside of the composting structure. See Section 7.3.4 of the SSHP for material and method and sampling strategy.

Time integrated air samples for bioaerosols will be completed using a high volume sampling pump, two stage impactor and culture dishes filled with growth media for bacteria and for fungi (molds and yeast). The bacteria culture dish will be subcultured for analysis of E.coli using velvetten impression. Six area samples for each analysis category will be obtained inside of the structure and six samples for each analysis category will be obtained outside of the structure (representing background). Inside structure samples will be obtained shortly after the windrows are mixed and approximately one week into the composting process. See Section 7.3.4 of the SSHP for material and method and sampling strategy.

During composting, dip slide samples may be obtained from water accumulated in the building sump and analyzed for biologicals. Also, contact slide samples may be obtained from any assumed fungal growth on building components and analyzed for biologicals. See Section 7.3.4 of the SSHP.

Wipe sampling will be performed randomly throughout the pilot scale operations to assess effectiveness of the personnel decontamination operation. Random wipe samples will include the insides of personnel protective equipment, clean side change rooms, and the lavatory and lunchroom areas. Metals and explosive residues will be tested. Details are provided in the SSHP, Section 7.3.5.

15.4 NOISE MONITORING

Noise levels will be monitored at the start of each task and monthly thereafter, or when there is a change in equipment or job layout. A Type 2 sound level meter will be used to assess potential occupational noise exposures.

15.5 EXPLOSIVE CONTAMINATED MATERIAL HANDLING

The Contractor shall comply with all requirements and recommendations from the U.S. Navy concerning management of explosive contaminated materials. Recommendations from the Hazard Analysis report must be implemented. Several pieces of machinery may have to have explosive containment or other devices attached to or near the equipment to satisfy the recommendations. If this occurs, the equipment may be shut down for a retrofitting between the clean soil and the contaminated soil composting periods.

16.0
DEMOBILIZATION

Demobilization of the site facilities will occur at the conclusion of the project (full scale operation). It is assumed that the elements of demobilization described in this section may change by the time the project is concluded in order to be consistent with the needs of NSWC Crane for continued full scale soil bioremediation or reuse of the facility for other purposes. For the purpose of this Pilot Scale Operational Plan, it will be assumed NSWC Crane will continue to use the facility for purposes of full scale soil treatment. Final demobilization of the facility will be discussed in the Full Scale Operational Plan.

In the unlikely event that the bioremediation treatment process is abandoned or if the facility is shut down for an extended period of time, the following demobilization activities will be performed.

16.1 EQUIPMENT

All remaining composting amendment materials not in contact with contaminated soil will be used as topsoil amendments for revegetation. All equipment used in the bioremediation facility or at the excavation sites will be thoroughly decontaminated prior to leaving the site. Each piece of equipment will be brushed clean of any loose dirt or compost material prior to entering the truck wash area at the Bioremediation Facility exit. Once inside the truck wash station, the equipment will undergo a thorough cleaning with a high-pressure, low-volume water spray. All wheels, wheel wells, vehicle undercarriages, truck beds, loader buckets, etc., will be pressure washed.

16.2 PROJECT FACILITIES

The office trailers, laboratory and shower trailers, and supplies shall be removed from the site. All hand tools, sampling equipment, and instrumentation which has come in contact with contaminated soil or compost will be decontaminated prior to leaving the site, as described in Field SOP 3.0 in Appendix D.

Once all equipment and vehicles have been decontaminated, the truck wash facility itself will be pressure washed and decontaminated. All decontamination fluids will be collected in the truck wash facility sump and sampled for analysis and disposal. Final rinsate samples and a field blank will be collected and submitted to the analytical laboratory for explosives analysis by U.S. EPA SW846 Method 8330. Additional cleaning of the wash facility will be implemented as required based on results of the rinsate sample analysis. The same procedure will be followed for the cleaning and sampling of the truck wash sump.

The interior surfaces of each building will be pressure spray washed and final rinse samples collected and tested for explosives per Method 8330. Decontamination fluids will be collected and sampled for analysis and disposal. Additional wall and floor final rinse samples will be analyzed to evaluate facility cleanliness. Additional cleaning of the buildings will be implemented as required based on rinsate sample results.

The asphalt surface will be pressure washed and final rinsed in the same manner as the truck wash and compost buildings. All wash fluids will be collected in the storm water retention ponds and sampled to determine appropriate disposal. Final rinsate samples will be collected and submitted for explosives analysis per Method 8330. The storm water retention ponds will be cleaned utilizing the same cleaning and sampling process.

The asphalt pad, buildings, truck wash facility, storm water retention ponds, utilities and sumps will be left intact for NSWC Crane use.

17.0
REFERENCES

Foster Wheeler Environmental Corporation, 1996, *Final Operations and Maintenance Plan, Bioremediation of Sites D and F Soils at Naval Submarine Base, Bangor, Washington*, Delivery Order No. 0057, Contract No. N44255-93-D-4050. April 22, 1996.

Kristoff, F.T., Ewing, T.W., and Johnson, D.E., 1987, *Testing to Determine Relationship Between Explosive Contaminated Sludge Components and Reactivity.* U.S. Army Toxic and Hazardous materials Agency, Aberdeen, MD. January 1987.

Morrison Knudsen Corporation, Approved *Quality Assurance Project Plan For Pilot Scale Operations At The Biofacility NSWC Crane, Crane, Indiana.* 1997.

Naval Surface Warfare Center, 1997. Storm Water Permit for Industrial Activities General Permit #INR00C083 11/9/94, amended 1997.

Northeast Regional Agricultural Engineering Service (NRAES), 1992, *On-Farm Composting Handbook, NRAES-54.* Ithaca, New York, 1992.

Preston, K.T., 1995a. Memorandum Thru CEWES-EE-R for CEWES-GG-Y *In-progress Review (IPR), Crane NSWC Bench Scale Compost Testing.* U.S. Army Corps of Engineers, Waterways Experiment Station, Vicksburg, MS. May 1995.

Preston, K.T., 1995b. Memorandum Thru CEWES-EE-R for CEWES-GG-Y *In-progress Review (IPR), Crane NSWC Bench Scale Compost Testing.* U.S. Army Corps of Engineers, Waterways Experiment Station, Vicksburg, MS. October 1995.

Preston, K.T., Wade, R., Ro, K.S., Seiden, S. 1996. *Bench Compost Implementation at Crane Naval Surface Warfare Center.* Technical Report EL-96-, U.S. Army Engineer Waterways Experiment Station, Vicksburg, MS.

URS, 1994, *Phase III Final Work Plan For Pilot-Scale Treatability Study of Ordinance Contaminated Soils, Naval Submarine Base, Bangor, Silverdale, Washington.* URS Consultants, INC., Seattle, Washington, September 1994.

U.S. Army Corps of Engineers(ACOE), 1992a. *Draft Part I RCRA Facility Investigation Phase III Soils Report for: Ammunition Burning Ground, SWMU #03/10 Naval Surface Warfare Center, Crane, Indiana.* U.S. Army Corps of Engineers, Waterways Experimental Station. November.

U.S. Army Corps of Engineers(ACOE), 1992b. *Draft RCRA Facility Investigation Phase II Soils Report For: Rockeye, SWMU #10/15, Naval Surface Warfare Center, Crane, Indiana.* U.S. Army Corps of Engineers, Waterways Experimental Station. July.

U.S. Army Corps of Engineers(ACOE), 1995. *Internal Draft Part 2 RFI Phase III Soils Report: Ammunition Burning Ground, SWMU #03/10 Naval Surface Warfare Center, Crane, Indiana.* U.S. Army Corps of Engineers, Waterways Experiment Station. September.

U.S. Army Environmental Center (USAEC), 1993. *Technology Application Analysis: Windrow Composting of Explosives Contaminated Soil at Umatilla Army Depot Activity Hermiston, Oregon.* September 1993.

U.S. Environmental Protection Agency (U.S. EPA), 1993a. *Seminar on Technologies for Remediation Sites Contaminated with Explosive and Radioactive Wastes, EPA/625/K-93/001.* June.

U.S. Environmental Protection Agency, 1993b. *Approaches for the Remediation of Federal Facility Sites Contaminated with Explosive or Radioactive Wastes, EPA/625/R-93/013.* September.

U.S. Environmental Protection Agency, 1993c. *Remedial Investigation of Site D at Naval Submarine Base Bangor, WA,* Federal Environmental Restoration Conference Proceedings.

U.S. Environmental Protection Agency, Region 3, 1994a. *Risk Based Concentration Table, Fourth Quarter 1994.* Roy L. Smith, Senior Toxicologist (3hw13), U.S. EPA Region 3.

U.S. Environmental Protection Agency, 1994b. Tech Trends: *The Composting Alternative to Incineration of Explosives Contaminated Soils,* EPA 542-N-94-008, November, 1994.

U.S Environmental Protection Agency, 1995. Memorandum: *Response to January 3, 1995 Letter.* Michael Shapiro, Director, Office of Solid Waste

U.S. Environmental Protection Agency, Region 9, 1996a. *Region 9 Preliminary Remediation Goals (PRGs) 1996.* Stanford J. Smucker, Ph.D., Regional Toxicologist (H-9-3), Technical Support Team.

U.S. Environmental Protection Agency, 1996b. Memorandum: *Remedy Selection For Explosives Composting Treatment.* Harry Craig, Remedial Project Manager, Region 10. April 1996.

U.S. Environmental Protection Agency, 1996c. EPA Federal Facilities Forum Issue; *On-site Analytical Methods And Field Sampling For Explosives In Soil.* A. B. Crockett, H. D. Craig, T. F. Jenkins, and W. E. Sisk. Draft Version 6, May 1996.

Weston, 1991. *Final Report; Optimization Of Composting For Explosives Contaminated Soil, Report No. CETHA-TS-CR-91053.* U.S. Army Corps of Engineers, November, 1991.

Weston, 1993. *Windrow Composting Demonstration for Explosives-Contaminated Soils at the Umatilla Deport Activity Hermiston, Oregon, Report No CETHA-TS-93043.* Roy F. Weston, Inc. August.

APPENDIX A

PILOT SCALE SITE SAFETY AND HEALTH PLAN

TASK-SPECIFIC SITE SAFETY AND HEALTH PLAN

PILOT SCALE

SOILS BIOREMEDIATION FACILITY

NSWC CRANE
Crane, Indiana

June 6, 1997
Revision 5

CONTRACT #N62467-93-D-1106
DELIVERY ORDER #0009
STATEMENT OF WORK #0007

Prepared For:

SOUTHERN DIVISION
NAVAL FACILITIES ENGINEERING COMMAND
P. O. Box 190010
2155 EAGLE DRIVE
NORTH CHARLESTON, SOUTH CAROLINA 29419-9010

Prepared By:

MORRISON KNUDSEN CORPORATION
2420 MALL DRIVE
CORPORATE SQUARE 1 - SUITE 211
NORTH CHARLESTON, SOUTH CAROLINA 29406

TABLE OF CONTENTS

Section		Page
1.0	INTRODUCTION	A-6
1.1	WORK TASK SUMMARY	A-6
1.2	CONTAMINANT CHARACTERISTICS	A-6
1.3	REFERENCES	A-7
2.0	SAFETY AND HEALTH HAZARDS SUMMARY	A-9
2.1	OVERVIEW	A-9
2.2	ACTIVITY HAZARD ANALYSES	A-9
2.3	CHEMICAL HAZARDS	A-10
2.4	BIOLOGICAL HAZARDS	A-10
2.5	CONSTRUCTION SAFETY HAZARDS	A-10
2.5.1	Physical Hazards	A-10
2.5.2	Noise	A-10
2.5.3	Adverse Weather Stress	A-10
2.5.4	Excavations	A-11
2.5.5	Hazardous Energy Control (Lockout/Tagout)	A-12
2.5.6	Fire and Explosion	A-12
2.5.7	General Motor Vehicle, Hand and Power Equipment Safety	A-13
2.5.8	Vehicular Traffic and Work-Site Control Hazards	A-13
2.5.9	Access and Haul Roads	A-14
3.0	RESPONSIBILITIES AND AUTHORITIES SUMMARY	A-15
3.1	MK PROJECT MANAGER (PM)	A-15
3.2	MK GENERAL SUPERINTENDENT AND JOB SUPERVISORS	A-15
3.3	MK CERTIFIED INDUSTRIAL HYGIENIST (CIH)	A-16
3.4	MK SITE SAFETY AND HEALTH OFFICER (SSHO)	A-16
3.5	SUBCONTRACTOR PERSONNEL	A-16
3.6	NEAREST EMERGENCY MEDICAL FACILITY	A-16
4.0	TRAINING REQUIREMENTS SUMMARY	A-18
4.1	HAZARDOUS WASTE OPERATIONS TRAINING	A-18
4.2	SITE SPECIFIC TRAINING	A-18
4.3	RESPIRATORY PROTECTION TRAINING	A-19
4.4	HAZARD COMMUNICATION TRAINING	A-19
4.5	CPR/FIRST AID AND BLOOD BORNE PATHOGENS	A-19
4.6	DEPARTMENT OF TRANSPORTATION (DOT) HAZARDOUS MATERIALS	A-20
4.7	SAFETY MEETINGS	A-20
4.8	PLAN OF THE DAY (POD) MEETINGS	A-20
4.9	PRE- AND POST-ENTRY BRIEFINGS (MEETING)	A-20
4.10	QUALITY CONTROL PREPARATORY PHASE INSPECTION MEETING	A-21
4.11	RECORDKEEPING	A-21

TABLE OF CONTENTS

Section		Page
5.0	MEDICAL SURVEILLANCE PROGRAM REQUIREMENTS	A-22
5.1	SUMMARY	A-22
5.2	DRUG ABUSE PREVENTION PROGRAM	A-23
5.3	RECORDKEEPING	A-23
6.0	PERSONAL PROTECTIVE EQUIPMENT	A-24
7.0	MONITORING AND SAMPLING	A-26
7.1	GENERAL	A-26
7.2	MONITORING	A-26
7.2.1	Volatile Organic Compounds	A-26
7.2.2	Airborne Dust	A-27
7.2.3	Perimeter Monitoring	A-27
7.2.4	Noise Monitoring	A-28
7.2.5	Heat Stress and Cold Stress Monitoring	A-28
7.2.6	Carbon Dioxide, Hydrogen Sulfide, and Other Chemical Monitoring	A-29
7.3	AIR SAMPLING	A-29
7.3.1	Organic Compounds	A-29
7.3.2	Metals	A-31
7.3.3	Explosives Residues	A-31
7.3.4	Biological Hazards	A-32
7.3.5	Wipe Sampling for Explosives Residues and Metals	A-34
7.4	AIR MONITORING AND SAMPLING REQUIREMENTS	A-34
7.5	RECORDKEEPING AND CHAIN OF CUSTODY	A-34
8.0	GENERAL SAFETY RULES AND PROCEDURES	A-36
8.1	GENERAL	A-36
8.2	RULES AND PROCEDURES	A-36
9.0	WORK ZONES	A-39
9.1	EXCLUSION ZONE (EZ)	A-39
9.2	CONTAMINATION REDUCTION ZONE (CRZ)	A-40
9.3	SUPPORT ZONE (SZ)	A-40
9.4	WORK ZONE CONTROLS	A-40
10.0	PERSONNEL AND EQUIPMENT DECONTAMINATION AND HYGIENE PROCEDURES	A-42
10.1	EMERGENCY PERSONNEL DECONTAMINATION	A-42
10.2	PERSONNEL DECONTAMINATION	A-42
10.3	EQUIPMENT DECONTAMINATION	A-43
10.4	WASHING FACILITIES	A-43
10.5	DECONTAMINATION WASH WATER	A-43
10.6	SANITATION AND PERSONAL HYGIENE	A-43

TABLE OF CONTENTS

Section		Page
11.0	ON-SITE FIRST AID AND EQUIPMENT	A-44
11.1	FIRST-AID AND MEDICAL FACILITIES REQUIREMENTS	A-44
11.2	REPORT OF FIRST AID CASES	A-44
12.0	EMERGENCY RESPONSE PLAN AND CONTINGENCY PROCEDURES	A-45
12.1	PRE-EMERGENCY PLANNING	A-45
12.2	RESPONSIBILITIES	A-46
12.2.1	Project Personnel	A-46
12.2.2	Project Manager	A-46
12.2.3	MK Certified Industrial Hygienist (CIH)	A-46
12.2.4	MK Site Safety and Health Officer (SSHO)	A-47
12.3	EMERGENCY RECOGNITION AND PREVENTION	A-47
12.4	SAFETY ZONES	A-47
12.5	SITE SECURITY AND CONTROL	A-47
12.6	EVACUATION ROUTES	A-47
12.7	EMERGENCY DECONTAMINATION	A-47
12.8	EMERGENCY MEDICAL TREATMENT AND FIRST AID	A-48
12.9	COMMUNICATIONS	A-48
12.10	CRITIQUE OF RESPONSE AND FOLLOW-UP	A-48
12.11	INITIAL REPORTING AND MANAGEMENT OF INCIDENTS	A-48
13.0	LOGS, REPORTS, AND RECORDKEEPING	A-52
13.1	SAFETY AND HEALTH LOGBOOK	A-52
13.2	REPORTS	A-52
13.3	FIELD MASTER COPY OF SSHP	A-52
13.4	RECORDKEEPING	A-52
13.5	SAFETY AND HEALTH PROJECT COMPLETION REPORT	A-53
14.0	ON-SITE WORK PLANS	A-54
15.0	COMMUNICATION PROCEDURES	A-55
15.1	RADIO COMMUNICATION, TELEPHONE, ALARMS AND DRILLS/EXERCISES	A-55
16.0	SPILL CONTAINMENT PLAN	A-56
16.1	GENERAL	A-56
16.2	PREPLANNING FOR SPILL CONTROL	A-56
16.3	SPILL AND FIRE CONTROL MATERIALS AND EQUIPMENT	A-57
16.4	SPILL CONTROL MEASURES	A-57
16.5	DRUM, CONTAINER, AND TANK HANDLING AND MOVING PROCEDURES	A-57
16.6	INITIAL REPORTING AND MANAGEMENT OF INCIDENTS	A-58

TABLE OF CONTENTS

Section		Page
17.0	CONFINED SPACES	A-61

LIST OF TABLES

TABLE		PAGE
A-1	Site Description and Contaminants	A-63
A-2	Potential Contaminants	A-64
A-3	Personnel Names and Numbers	A-68
A-4	Training Requirements	A-70
A-5	Selection of Personal Protective Equipment	A-71
A-6	Minimum Personal Protective Equipment Requirements by Task	A-72
A-7	Airborne Contaminant Response Criteria	A-73
A-8	Frequency of Physiological Monitoring for Fit and Acclimatized Workers	A-77
A-9	Monitoring and Sampling Requirements	A-78

LIST OF FIGURES

FIGURE		PAGE
A-1	Directions to the Nearest medical Facility	A-81
A-2	Safety Meeting Report	A-81
A-3	Pre-Entry Briefing Signature Sheet	A-82
A-4	SSHO Daily Logbook Report	A-83
A-5	SSHP Weekly Inspection Checklist	A-84

ATTACHMENTS

ATTACHMENT		PAGE
A	ACTIVITY HAZARDS ANALYSIS (AHA)	A-1

1.0
INTRODUCTION

This Task-Specific Site Safety and Health Plan (SSHP) describes safety and health requirements for interim cleanup measures at NSWC Crane, specifically for pilot scale operations conducted at Solid Waste Management Unit (SWMU) 12/14 and the Soils Bioremediation Facility. This SSHP is consistent with requirements of the Occupational Safety and Health Administration's (OSHA) Hazardous Waste Site Regulations; 29 CFR 1910.120 and 29 CFR 1926.65; and the U.S. Army Corps of Engineers (ACOE) *Safety and Health Requirements Manual* EM 385-1-1, dated September 1996. This SSHP is applicable to all personnel who enter work areas described in this SSHP and who are under the control of Morrison Knudsen Corporation (MK) or MK's Subcontractors.

1.1 WORK TASK SUMMARY

SWMU 12/14 Mine Fill A - Excavation, removal, and screening (includes rock washing) of approximately 200 cubic yards of explosives-residual contaminated soil, transport to the Bioremediation Facility, soil sampling, decontamination, and site restoration. Table A-1 provides a summary on site description and contaminants.

Soils Bioremediation Facility - Explosives contaminated soil will be received at this facility from SWMU 12/14. The contaminated soil will be processed by mixing with amendments and composting in covered structures. Support subsystems include decontamination facilities; storm water diversion and retention controls; and office and laboratory trailers. Amendments that will be mixed with the contaminated soils include alfalfa and animal manures, sawdust, wood chips, straw, and potato waste in various recipes. Amendments will be loaded into a grinder/mixer and will either be stored or discharged directly into the composting building for formation of the windrows (refer to the Pilot Scale Operational Plan).

1.2 CONTAMINANT CHARACTERISTICS

The potential contaminants are summarized below. Material Safety Data Sheets (MSDSs) or National Institute for Occupational Safety and Health (NIOSH) Pocket Guides will be used as a source of information for each contaminant. MSDS and NIOSH information for each of the potential contaminants, process chemicals, or other chemical substances encountered during the interim cleanup process will be organized into a separate binder, commonly called the "MSDS Binder." These binders will be available to all personnel, at anytime, and will be at appropriate on-site locations including the MK job-site trailer and NSWC Medical Building. Additional information concerning potential contaminants is presented in Table A-2. The potential contaminants contained in the soils to be received at the Soils Bioremediation Facility are summarized below.

SWMU 12/14 Mine Fill A - Soil containing residues of TNT, HMX and RDX, and explosive-contaminated wastewater are present at the excavation site. Concentrations of individual constituents in the soil ranged from undetected to 15,300 mg/kg (Halliburton NUS, 1992). Halliburton NUS 1992 also reports other chemicals of concern to include, bituminous asphalt, micro-crystalline wax, toluene, naphtha, coal-tar naphtha, methylethylketone, and aluminum. In the same report, they report hazardous waste potentially generated at Mine Fill A to include Sludge containing explosives, pink water (TNT containing), grit blast residue (cadmium, chromium, lead, barium), paint waste (metals and hydrocarbons to include halogenated, aromatic, ketone and alcohol), and spent carbon. Follow-on soil sampling and subsequent analysis for soils representing the initial 200 cubic yards to be composted confirmed HMX, TNT, and RDX contamination. Total metals reported include barium, cadmium, chromium and lead in low mg/kg concentrations. TCLP metals were undetected in the majority of the sampling runs. Volatile organics were undetected or estimated to be in the low microgram/kilogram levels.

1.3 REFERENCES

American Conference of Governmental Industrial Hygienists (ACGIH), 1996-1997. *Threshold Limit Values for Chemical Substances and Physical Agents and Biological Indices.*

Halliburton NUS, 1992. *Final RCRA Facility Investigation Phase I EMR SWMU 19/00, 08/17/12/14, and 13/14, NSWC Crane, Indiana.* August.

Morrison Knudsen Corporation (MK), 1995. *Safety Procedures and Guidelines Manual.* November.

MK, EC&E Group, 1994a. *Industrial Hygiene Procedures Manual.* Rev. 0. April.

MK, 1996. *Accident Prevention Plan For Naval Facilities Engineering Command Southern Division,* Prepared by Morrison Knudsen under contract N62467-93-D- 1 106. Rev. 1. November.

MK, 1994c. *Safety and Health Program Description for Hazardous Waste Operations.* Rev. 1. September.

MK, 1995d. NAVFAC SouthDiv Project Procedures:
PHSP 01.1, Hazardous Energy Control (Lockout/Tagout), 3/15/96.
PHSP 02.1, Emergency Response, 3/15/96.
PHSP 03.1, Spill Response, 3/15/96.
PHSP 04.1, Incident Reporting, 3/15/96.
PHSP 05.1, Excavations, 5/21/96.

MK, 1994e. *White Paper on Composting Technology*. December.

MK, 1997. *Pilot Scale Operational Plan for Soils Bioremediation Facility*. Revision 4. April.

NIOSH/OSHA/USCG/EPA, 1985. *Occupational Safety and Health Guidance Manual for Hazardous Waste Site Activities*. DHHS (NIOSH) Publication No. 85-115. October.

NIOSH, 1994. *Pocket Guide to Chemical Hazards.*

Naval Energy and Environmental Support Activity (NEESA), 1983. *Initial Assessment Study of NSWC, Indiana; NEESA 13-0003*, NSWC Crane, Indiana. May.

OSHA, 1996. *Limits for Air Contaminants*, Title 29 CFR Part 1910 Section 1000, Table Z-1, July 1, 1996.

U.S. Army Corps of Engineers (ACOE), 1992. *RFI Phase II Soils Report for Rockeye, SWMU 10/15, NSWC Crane, Indiana*. IN5 170 023 498. July.

2.0
SAFETY AND HEALTH HAZARDS SUMMARY

2.1 OVERVIEW

Hazards at this site include construction safety hazards associated with heavy equipment operation; soil excavation, potential contact with underground utilities and undermining of structural supports in Mine Fill A; inclined walking and working surfaces; traffic control including haul road layout; energy control (electrical and other kinetic energy sources) or other utility lines; site restoration including backfilling and compaction; eye/head/feet physical hazards; and heat and cold stress.

During pilot scale operations, the potential risk of acute exposure to the chemical contaminants listed in Table A-2 is considered low if the engineering controls, administrative controls, and personal protective equipment (PPE) requirements are strictly adhered to. The highest health risk chemical contaminants are TNT, HMX and RDX. These chemicals can present health hazards in the form of airborne aerosols and by direct contact. Health hazards of metals as an airborne aerosol is considered low. Potential health hazards involving hydrocarbons and other inorganic gases and vapors are also considered low. Potential biological hazards may include airborne bioaerosols such as bacteria, molds, yeast, and fungi. The health hazard potential is considered moderate based on published results of air sampling campaigns at sewage sludge, leaf, and municipal waste composting facilities.

The Soils Bioremediation Facility processing equipment has been designed and will be operated to minimize dust releases, and safeguarded to prevent employee contact with rotating equipment.

2.2 ACTIVITY HAZARD ANALYSES

AHA have been prepared for each anticipated task in accordance with EM 385-1-1, September 1996 (ACOE, 1996). These hazard analyses are in the form of worksheets contained in Attachment A of this SSHP. Each site activity shall be reviewed by field supervision, namely the MK Site Safety and Health Officer (SSHO) and MK General Superintendent prior to starting work to determine if the prepared AHA adequately addresses the planned activity. If the prepared AHA requires revision or a new task is identified, additional hazard analysis will be prepared as needed. A new AHA worksheet shall be field prepared by the MK SSHO before the activity takes place. The Pre-Entry Briefing meeting is utilized to review the AHA and is conducted with all affected workers by the Superintendent.

2.3 CHEMICAL HAZARDS

The potential chemical contaminants, their exposure limits, sign and symptoms of overexposure, and first aid requirements are presented in Table A-2.

2.4 BIOLOGICAL HAZARDS

Each work area will be approached with caution and assessed for insect, snake and biohazard plant life. Potential biological bioaerosol hazards includes bacteria, molds, yeast and fungi which may be present in airborne concentrations greater than background at the Bioremediation Facilities during the composting process.

2.5 CONSTRUCTION SAFETY HAZARDS

2.5.1 Physical Hazards

Physical hazards on this project include the use of heavy equipment including haul trucks, backhoe and loader, screener, grinder, windrow turner and other process equipments; and tripping and slipping from walking and working surfaces. Project personnel will receive site-specific and safety training, discussed later, to orient them to these potential hazards.

2.5.2 Noise

Operations may generate noise levels that exceed allowable limits. Hearing protection shall be provided for all field personnel, and its use is required when noise levels exceed 85 decibels A weighted network {dB(A)} steady state or 140 dB(A) impulse, regardless of the duration of exposure. Hearing protection will be provided to all field personnel. A comprehensive Hearing Conservation Program will be implemented when noise levels equal or exceed 85 dBA on an 8-hour time weighted average. Exposure assessments will be conducted by the MK SSHO throughout the work campaign.

2.5.3 Adverse Weather Stress

All employees are to be alert to the signs and symptoms of heat stress. Should extreme fatigue, cramps, dizziness, headache, nausea, profuse sweating, rapid pulse, or pale clammy skin occur, the employee is to immediately leave the work area, rest, cool off, and drink plenty of cool water. If the symptoms do not subside after a reasonable rest period, the employee shall notify the supervisor, who in turn will notify the MK SSHO and seek medical assistance. The MK SSHO and the site supervisor will be alert to signs of heat stress in site personnel and increase the frequency of breaks and fluid consumption as necessary.

Cold injury is classified as either localized, as in frostbite, frost nip or chilblain, or generalized, as hypothermia. In judging the cold hazard, both air temperature and wind

chill factor must be considered. The first symptoms of hypothermia are uncontrolled shivering, the sensation of being cold; the heartbeat slows and sometimes becomes irregular; the pulse weakens and blood pressure changes. Severe shaking or rigid muscles caused by bursts of energy change the body chemistry. Vague or slowed speech occurs; memory lapses, incoherence and drowsiness then occur. As core temperature continues to drop, listlessness, confusion and little attempt to keep warm commences. Pain in the extremities is felt. As exhaustion sets in, the body's ability to contract blood vessels is diminished, and rapid loss of heat and cooling begins.

Frostbite can occur without hypothermia when the extremities do not receive sufficient heat from central body stores. This can occur because of inadequate circulation and/or insulation. This condition results in damage to and loss of tissue. The most vulnerable parts of the body are the nose, cheeks, ears, fingers and toes. Damage from frostbite can affect the outer layer of skin only, or it can include the tissue beneath the outer layer. Damage from frostbite can be serious; scarring, tissue death and amputation are all possibilities. The symptoms of frostbite include: 1) The skin changes color to white or grayish-yellow, progresses to reddish-violet and turns black as tissue dies; 2) Pain may be felt at first, but subsides; 3) Blisters may appear; 4) The affected part is cold and numb; and 5) The skin has a waxy appearance.

To prevent cold stress, proper clothing must be worn. It is important to preserve the air space between the body and the outer layer of clothing to retain body heat. Refer to Section 7.2.6 for more guidance on heat and cold stress management.

2.5.4 Excavations

Open excavations and trenches present a hazard from falling into the excavation and/or side wall collapse while personnel are near or inside the excavation. To minimize exposure risk, the excavation work site will be barricaded ~~with orange snow fence~~ and signs posted. Refer to MK Project Procedure PHSP 05.1 for specific excavation requirements. The deepest excavation on this project may approach slightly more than 3 feet. OSHA 1926.650 Subpart P - Excavations and Corps of Engineers requirements (EM 385-1-1, Section 25) for sloping or shoring are not anticipated as necessary. When excavations are completed near building sidewalls and foundations, an MK engineer will assess potential collapse scenarios and specify any control requirements (e.g. shoring).

Positive identification of underground utilities and services is required at least 24 hours prior to any excavation, trenching or penetrations. An Excavation and Trenching Permit application must be submitted at least seven days prior to any excavation activities. The MK Project Manager (PM) will be responsible for obtaining this permit through the NSWC Crane Public Works Department (PWD). Part of this permit process will include a UXO

survey by the NSWC representative. ~~Regardless of the size of the trench,~~ MK will have a designated competent person who will evaluate all excavations and trenches on a daily basis ~~regardless of whether personnel will enter~~. Inspections shall be recorded in a log book and field inspection checklists.

2.5.5 Hazardous Energy Control (Lockout/Tagout)

Ground Fault Circuit Interrupters (GFCIs) will be installed on all portable electrical equipment and installations in accordance with EM 385-1-1 Section 11.C.05. All extension cords shall have GFCI protection and shall be inspected and determined to be free of cracks or frays.

Any system where the potential exists for unexpected energizing, start-up, or release of kinetic or stored energy during servicing and maintenance resulting in injury or damage shall be energy isolated in accordance with EM 385-1-1 Section 12, 29 CFR 1910.147, and PHSP 01.1. The MK Site Superintendent shall be responsible for verifying adequacy of all lockout/tagout installations and notifying all affected personnel. The MK Site Superintendent has the responsibility for implementing energy control measures. The PWD will provide energy control services on Mine Fill A utilities and process equipment if necessary. MK will provide their own energy control services on Bioremediation facility equipment and processes.

In addition, energy controls apply to motorized heavy equipment and process equipments and the following requirement applies. At a minimum, during service and maintenance of motorized equipment, the key shall be removed and in possession of the service or maintenance person and a "Do Not Operate" tag signed by this person shall be displayed near the start-up controls. Pre-operational checks and maintenance requirements on process equipments, including energy control will be incorporated into checklists.

2.5.6 Fire and Explosion

An Unexploded Ordnance Survey (UXO) will be required prior to subcontractor mobilization and may continue throughout the excavation process. The UXO Survey will be conducted by NSWC personnel.

No hot work or open flames will be allowed in the work area without a Hot Work Permit obtained through the MK SSHO. Hot Work Permitting will be coordinated through the base Fire Department. Flammable and combustible fuels for heavy equipment shall be stored and dispensed in accordance with NFPA 30, the Flammable and Combustible Liquids Code. At least two 20 lb or equivalent "ABC" multi purpose fire extinguisher shall be maintained for fire response at the entrance to each Contamination Reduction Zone (CRZ). Fire extinguishers will be located at the diesel fuel storage location and in each of the Composting Buildings. All mobile heavy equipment must be fitted with a minimum 5 lb "ABC" fire extinguisher. Any temporary trailers or structures must have fire

extinguishers installed in accordance with NFPA 10. Depending on the fire loading, in most cases a 5 lb "ABC" is sufficient in each office trailer. This extinguisher must be mounted at least four feet from the floor next to a egress door. The MK SSHO is responsible for completing monthly checks on the fire extinguishers and recording appropriately. Use of any tool that can be considered an ignition hazard where fire and explosion hazards may exist is strictly prohibited. Portable power tools shall be explosion proof in accordance with NFPA 70B and 70E, Class 1, Division 1, Group D or otherwise approved for use in potentially explosive atmospheres.

2.5.7 General Motor Vehicle, Hand and Power Equipment Safety

The following traffic rules will apply to all motorized vehicles and equipment while on site:

- Equipment carrying waste shall always have the right-of-way within the Work Zones.
- The speed limit is 10 mph, or as posted. Exceeding the speed limit is cause for disciplinary action, including removal from the site.
- Personnel shall not ride equipment that has not been specifically designed for the transport of personnel.
- Seatbelts shall be worn at all times when operating any motorized equipment or vehicle.
- All motor vehicles and equipment including hand and power tools shall be subject to safety inspections by the MK SSHO. The MK SSHO reserves the right to reject any equipment. A "DO NOT USE" or "DEFECTIVE" tag will be placed on the equipment and documented in the MK SSHO Logbook. Corrective action will be pursued with the Superintendent.
- Daily safety checklists shall be completed by heavy equipment operators and delivered to the MK Site Project Office on a daily basis. The checklist is based on the equipment manufacturers recommended guidelines for daily checks.

2.5.8 Vehicular Traffic and Work-Site Control Hazards

Potential hazards from vehicular traffic around work areas including the Soils Bioremediation Facility will be controlled by using traffic control items such as traffic cones, flagging, barricades, and signs. Types and placement of traffic control items will be in accordance with EM 385-1-1, Section 8 and 29 CFR 1926.201 and 202. Workers required to work in active traffic areas or roadways will be required to wear high visibility reflective vests.

2.5.9 Access and Haul Roads

If special access and haul roads are required and constructed for this project, they will be constructed in accordance with EM 385-1-1 Section 21.I.

3.0
RESPONSIBILITIES AND AUTHORITIES SUMMARY

This section describes the roles and responsibilities of project personnel with regard to safety and health. Ultimately, responsibility for the safety and health lies with the individual. All personnel must be cognizant of the hazards and the methods of reducing the risk of injury and illness. All personnel will comply with the rules and procedures set forth in this plan and will make project management aware of any conditions which may jeopardize the welfare of project workers and/or the general public. The specific personnel names and telephone numbers of responsible persons are presented in Table A-3. Figure A-1 is the route map to the nearest medical facilities which also shows the NSWC Base layout.

3.1 MK PROJECT MANAGER (PM)

The PM is responsible for the management of all aspects of the project, including safety and health. The PM is responsible for ensuring that all project tasks receive appropriate safety and health review before commencement of field activities and that the necessary equipment and facilities are available to implement the SSHP.

3.2 MK GENERAL SUPERINTENDENT AND JOB SUPERVISORS

The MK General Superintendent and the Job Supervisor(s) are responsible for ensuring that the safety and health aspects for their particular task are addressed. They are responsible for the implementation of the SSHP in the field and for ensuring that all project personnel comply with provisions of the plan. The MK General Superintendent and Job Supervisor(s) are also responsible for notifying the MK SSHO of any changes in work conditions which may affect the safety and health aspects of the task. The MK General Superintendent is responsible for conducting Plan of the Day (POD) meetings. The Job Supervisor(s) are responsible for conducting Pre-Entry Briefings and Post Entry Briefings when required.

The Job Supervisor(s) must notify the MK SSHO and MK General Superintendent of all accidents and incidents as soon as possible. The Job Supervisor(s) shall conduct an accident investigation and record the results of the investigation on a Supervisor Accident Investigation Report form or equivalent form. The initial investigation report shall be formally transmitted to the MK Project Manager within four hours after critical management of the incident is complete. The MK Project Manager shall follow the reporting requirements described in PHSP 04.1. The MK General Superintendent shall conduct a critique of the incident with selected MK and Subcontractor personnel as soon as possible after critical management of the incident is complete. Lessons learned will then be developed by the MK General Superintendent and Job Supervisor(s) and communicated to all affected personnel.

3.3 MK CERTIFIED INDUSTRIAL HYGIENIST (CIH)

The MK CIH who is the MK Project Management Office (PMO) Health and Safety Manager is responsible for preparation of the SSHP. The CIH is responsible for making modifications to the plans and recommending changes to the work tasks if they affect safety and health. The CIH is responsible for ensuring that all required sampling/monitoring is performed and that all required safety and health documentation is maintained. The CIH may assign some tasks to the MK SSHO for implementation.

3.4 MK SITE SAFETY AND HEALTH OFFICER (SSHO)

The MK SSHO is responsible for the day-to-day implementation of the SSHP, and verification of compliance with the SSHP and all applicable occupational safety and health rules and regulations. The SSHO has the authority to suspend work at any time if there is an imminent threat to the health and safety of project workers or the general public. The SSHO shall assure the Navy's designated authority at the site is notified immediately of any accident including spills. The SSHO shall assist in the accident investigation effort and shall have final approval authority for accident reports. The MK Work Plan document describes in detail the role and responsibilities of the SSHO on this project.

3.5 SUBCONTRACTOR PERSONNEL

All Subcontractors are required to abide by the requirements of this SSHP. They are also required to comply with all applicable and appropriate federal, state, and local laws, standards, and regulations. Subcontractors must notify the MK SSHO and MK General Superintendent of all accidents as soon as possible. Subcontractors must maintain records of all first aid rendered and recordable, and lost time injuries. Subcontractors must notify the MK SSHO of any changes in work conditions which may affect the safety and health aspects of the task.

3.6 NEAREST EMERGENCY MEDICAL FACILITY

Directions to the On-Site NSWC Medical Department:

The NSWC Fire Department coordinates the on-site ambulance service. The Medical Department is located in Building 12, off of road H-2, just north of H-5. See Figure A-1.

Directions to Bedford Medical Center:

From the Bedford Gate, head east on Highway 158 to the city of Bedford, 158 turns left onto 16th Street. The distance to hospital is approximately 20 miles. This gate is open during the hours of 6 AM to 8 AM and 3 PM to 6 PM on Mondays through Fridays.

Directions to Bloomington Hospital:

Exit NSWC on road H5-45 through the Bloomington Gate, then follow Highway 45 North to Bloomington. At the intersection of Highway 45 and Highway 37, continue straight ahead and follow Bloomfield Road north until it becomes 2nd Street. Continue on 2nd Street; the hospital will be on right-hand side of the road.

4.0
TRAINING REQUIREMENTS SUMMARY

This section summarizes training requirements for project personnel. A training requirements summary is provided as Table A-4.

4.1 HAZARDOUS WASTE OPERATIONS TRAINING

All personnel entering a contamination reduction zone or exclusion zone shall have completed the initial 40-Hour Hazardous Waste Operations Safety and Health Training and three days of supervised experience pursuant to 29 CFR 1910.120(e)(3). All personnel shall receive eight hours of refresher training annually, pursuant to 29 CFR 1910.120(e)(8), as necessary. All on-site supervisors and managers shall receive an additional eight hours of specialized training pursuant to 29 CFR 1910.120(e)(4).

4.2 SITE SPECIFIC TRAINING

All personnel shall receive site-specific safety and health training prior to entering the site or commencement of work. All site employees and subcontractors, including those working in the support zone, shall receive this training. The Job Supervisor(s) are responsible for identifying personnel requiring this training and coordinated with the MK SSHO regarding scheduling of this training. The MK SSHO or designated alternate will conduct the training. Site visitors shall receive site-specific training prior to entering an exclusion zone. An abbreviated version of this training will be given to site visitors not entering an exclusion zone but whose business will be conducted unescorted in the near vicinity of the Work Zones. The format and content will be left up to the discretion of the MK SSHO. This training will cover the SSHP, but not necessarily be limited to, the following topics:

- Names of site safety and health personnel.
- Safety and health hazards present on the site and anticipated during the work campaign.
- Hazard Communication.
- PPE requirements.
- Safe work practices including drum handling.
- Engineering controls.
- Medical surveillance requirements, including recognition or symptoms and signs which might indicate overexposure to hazards.
- Decontamination procedures.
- Emergency procedures.
- Spill containment plan.
- Confined Space Entry.

- Energy Control.
- All other requirements of this SSHP.

If permit required confined space designations are made, then personnel involved with confined space entry work shall be required to have certified documented training in confined space entry procedures in accordance with the requirements of 29 CFR 1910.146. Copies of certificates must be presented to the MK SSHO prior to commencing work. Confined space entry procedures shall be implemented by the MK SSHO in accordance with MK IH Procedure 9. An MK Confined Space Entry Permit shall be posted at each work site during permit confined space entry activities. The Base Fire Department shall be notified of the location of confined space entries and expected duration at least two hours in advance of entry by the MK SSHO.

4.3 RESPIRATORY PROTECTION TRAINING

All personnel required to use respiratory protection shall have certified training in respirator use, care and maintenance pursuant to 29 CFR 1926.103 and 29 CFR 1910.134. Each individual shall be medically qualified to wear a respiratory device and have documented evidence of successfully completing respiratory training and fit testing.

4.4 HAZARD COMMUNICATION TRAINING

All personnel shall complete hazard communication training pursuant to 29 CFR 1910.1200 and 29 CFR 1926.59 regarding all potentially hazardous chemicals to which they may be exposed. MSDSs and/or NIOSH Pocket Guides for the contaminants suspected to be in the various work sites will be placed in a site MSDS Right-To-Know Binder. Copies will be maintained at each work site or some location convenient for employees to review plus a copy will be kept at the MK Project Office. Hazard Communication training will be included as part of the Site-Specific Training required in Section 4.2. When new chemicals are brought onto the work site or new chemical contaminants are identified, an MSDS and/or NIOSH Pocket Guide will be added to the MSDS Right-To-Know Binder(s) with a corresponding review by the MK SSHO and Job Supervisor(s) and if necessary, training shall be conducted with affected individuals. The MK SSHO has overall responsibility for maintenance of the MSDS database. Job Supervisor(s) are responsible for reviewing the MSDS, identifying training needs for affected workers and transmitting a copy of the MSDS to the MK SSHO.

4.5 CPR/FIRST AID AND BLOOD BORNE PATHOGENS

At least one employee on each shift shall be qualified to administer First Aid and CPR. At the minimum, the MK SSHO shall be First Aid/CPR qualified. This person is also required to be trained to 29 CFR 1910.1030 (BLOOD BORNE Pathogens). Trained First Aid and CPR personnel shall be identified by hard hat stickers or other means of identification.

4.6 DEPARTMENT OF TRANSPORTATION (DOT) HAZARDOUS MATERIALS TRAINING

All personnel required to classify, mark, select packaging, inspect, load and transport hazardous materials must be trained to 49 CFR 172 Subpart H. This includes personnel responsible for packaging of samples to be sent to off site laboratories for analysis. Also included are personnel responsible for completing a hazardous waste or hazardous material manifest and insuring the hazardous waste/material is properly prepared for off site shipment.

4.7 SAFETY MEETINGS

Safety meetings for all MK employees shall be conducted on a weekly basis. This is a group meeting intended to be a self assessment of safety performance and a chance to review any lessons learned as a group, plus an opportunity to introduce specialized training topics. The meeting shall be chaired by the MK General Superintendent with assistance by the MK SSHO. This safety meeting can also be used to describe any changes in the Site Specific Training described in Section 4.4. Safety Meetings are documented using Figure A-2 from this plan or equivalent.

4.8 PLAN OF THE DAY (POD) MEETINGS

Plan Of The Day (POD) Meetings shall be held at the beginning of each shift to review the planned work of the day as well as any safety and quality concerns. The meeting is chaired by the MK General Superintendent or MK PM. The attendee's include Job Supervisor, the MK Quality Control representative, the MK SSHO and other selected personnel. The date, time, personnel attending and meeting minutes shall be documented in field log-books.

4.9 PRE- AND POST-ENTRY BRIEFINGS (MEETING)

Pre-entry briefings shall be held for employees prior to their initiating any new or differing site activity in an exclusion zone and at such other times as necessary to ensure employees are knowledgeable of the work plan activity, the Activity Hazards Analysis (AHA), and that the plan and analyses are being followed. Pre Entry Briefs are the responsibility of the Job Supervisor. Attendance shall be documented using Figure A-3 from this Plan. Feedback on the AHA worksheets is highly regarded and the MK SSHO should make every effort to validate there applicability.

Post-entry briefings shall be held as needed to assure changes in conditions or work methods are promptly reported and addressed. In addition, all incidents will be promptly evaluated and the evaluation results will be communicated to personnel in post-entry briefings and other meetings. Lessons-learned from these evaluations shall be communicated to all affected personnel. Post Entry Briefs are the responsibility of the Job Supervisor. They are not required to be formally documented, a logbook entry is sufficient.

4.10 QUALITY CONTROL PREPARATORY PHASE INSPECTION MEETING

The MK SSHO shall attend all Quality Control Preparatory Phase Inspection Meetings to discuss any safety and health concerns requiring special attention and to review anticipated safety requirements for a specific definable feature of work, and to review specific air monitoring required.

4.11 RECORDKEEPING

Written records of all required training and meetings shall be maintained on site by the MK SSHO. These records shall be made available to U.S. Navy personnel upon request. Subcontractors to MK shall provide copies of training certifications along with proof of medical surveillance physical and respirator certification to the MK Project Manager or MK SSHO prior to personnel working on site.

5.0
MEDICAL SURVEILLANCE PROGRAM REQUIREMENTS

5.1 SUMMARY

All project personnel who work within the exclusion zone for more than three days per month, or are required to use respiratory protection regardless of the time within the exclusion zone, will participate in a medical surveillance program in accordance with OSHA 1910.120 and 1926.65, Section 16 from the MK Safety and Health Program Description for Hazardous Waste Site Operations (MK employees only), and as described in this section.

The medical surveillance program consists of a baseline or initial examination, an annual medical examination, a termination examination, and episodic medical examinations as necessary. Termination exams specify to this job have been determined to not be necessary unless specific criteria is met as discussed in the MK Safety and Health Program for Hazardous Waste Site Operations, Section 16. Note: if MK personnel require physicals or other medical surveillance in the field, the MK PM and MK SSHO shall establish a purchase order agreement with the selected medical facility and contact the Health and Safety Manager for a copy of a sample Client Profile for their use as the purchase order specification.

At a minimum, the content of the initial, annual and termination examinations shall consist of the following medical tests and procedures (or as determined by the examining physician):

- Medical and occupation history.
- Complete physical examination.
- Pulmonary function test (FVC and FEV_1).
- Complete blood count, generally SMAC-22 or 24 biochemical profile.
- Audiometry.
- Complete urinalysis.
- Resting electrocardiogram.
- Vision screen.
- Chest X-ray (PA) (at the direction of the examining physician).

An episodic examination will be required if any employee develops signs or symptoms related to the possible overexposure to hazardous substances or other health hazards, if the employee has been injured, or if the employee has been exposed above the permissible exposure limits or published exposure levels in an emergency. The scope of any episodic examination will be left to the discretion of the examining physician.

A copy of the examining physician's written opinion about the employee's ability to perform work on this hazardous waste site and use respiratory protection, and a statement that the physician has informed the employee of the results of the examination shall be kept on site. Subcontractors must provide this information to the MK Project Manager or the MK SSHO prior to mobilization activities on site. For privacy reasons, these statements must not contain the specific results of medical examinations or tests.

5.2 DRUG ABUSE PREVENTION PROGRAM

Morrison Knudsen Corporation is committed to the establishment and maintenance of a safe and efficient work environment for all employees free from the effects of alcohol, illegal drugs, other controlled substances, and prohibited items.

5.3 RECORDKEEPING

The MK SSHO will manage medical surveillance records for MK employee's. The statements by the examining physician(s) attesting to the medical qualification of individual workers shall be maintained at the project site and will remain a part of the project files.

6.0
PERSONAL PROTECTIVE EQUIPMENT

In addition to engineering controls and administrative controls (e.g. work practices), Personal Protective Equipment (PPE) (a.k.a. Chemical Protective Clothing) shall be used to protect personnel from exposure to contaminants which may be encountered during activities on site as warranted. The following guidelines will be followed:

- Respirators and other PPE necessary to protect the health of employees shall be provided by their employer.
- Only NIOSH/MSHA-approved respirators and cartridges shall be used.
- The respirator user's medical status shall be verified by the MK SSHO before work is performed requiring respirator use.
- MK IH Procedure 14.0 shall serve as the written standard operating procedure governing the use of respirators at the job site. Section 10 from MK Safety and Health Program Description for Hazardous Waste Operations shall serve as the written standard operating procedure governing the use of PPE at the job site. Safe Work Practice (SWP) 4.0, found in Section 17 of the MK Safety and Health Program Description shall serve as guidance in chemical protective clothing selection and donning/doffing procedures.
- Respirators will be assigned to individual employees for their exclusive use and marked to indicate to whom it was assigned, for the duration of this project.

Table A-5 presents the basic levels (Level B, C, Modified D, and D) of PPE.

Table A-6 lists the minimum PPE level required for each task or operation. If air sampling/monitoring indicates that modification to the levels of protection are warranted, the MK SSHO is empowered with the authority to authorize the modification based on the guidance provided in Table A-7, Airborne Contaminant Response Criteria or by professional judgement.

The PPE has been selected based on what is known or anticipated about the site specific hazards. If conditions change, PPE selection and use shall be reviewed by the MK SSHO and the General Superintendent and upgraded or downgraded per their assessment. The MK SSHO shall record the rationale for the modification as a log book entry. Personnel will be trained if necessary on the use and limitations of specific pieces of PPE prior to initiation of work by their designated Supervisors during the Pre-Entry Briefs with assistance when necessary from the MK SSHO or General Superintendent.

PPE will be maintained and stored in accordance with the manufacturer's recommendation and good industrial hygiene practices. Personnel will inspect PPE prior to each use to assure the PPE is clean and good working order. Training will be provided to personnel concerning PPE inspection criteria by their supervisors with assistance when necessary from the MK SSHO. The MK SSHO shall conduct evaluations of effectiveness and useability of PPE. Logbook entries are sufficient but the data should be readily transferable to the safety and health project completion report (see Section 13.5).

7.0
MONITORING AND SAMPLING

Air monitoring refers to direct real time reading of airborne concentrations and air sampling refers to time integrated air sampling, either personal or area samples. The MK SSHO will maintain one photo-ionizing detector (PID) with 10.2 eV lamp, a supply of colormetric indicator tubes and handpump, and one multi-gas combustible gas indicator (CGI)/ Oxygen (O_2)/ Hydrogen Sulfide (H_2S)/ Carbon Monoxide (CO) meter. In addition, the MK SSHO will maintain a sound level meter and dust aerosol meter plus all time integrated air sampling equipment. Execution of real time air monitoring will be coordinated by the MK SSHO in accordance with the requirements for air monitoring depicted in Table A-9. Time integrated air sampling will be completed by the MK SSHO.

7.1 GENERAL

This section describes the air sampling and air monitoring program performed to evaluate project worker exposure to potentially hazardous airborne materials and to evaluate off-site impacts. The air sampling/monitoring results will be used to:

- Assess worker exposure to potentially hazardous materials with respect to the Permissible Exposure Limit (PEL) for Air Contaminants (Title 29 Code of Federal Regulations, Part 1910.1000) or other published exposure levels.
- Assess the adequacy of engineering controls and respiratory protection.
- Delineate areas where controls or respiratory protection is needed.
- Establish work control zones.

7.2 MONITORING

7.2.1 Volatile Organic Compounds

A direct-reading, real-time photo-ionization detection (PID) instrument (model: PhotoVac MicroTip) capable of detecting volatile organic compounds (VOCs) will be used whenever excavation and penetration in potentially contaminated areas occurs and for general area scans in the Composting Buildings. Readings will be taken at locations that reflect approximate concentrations of organic vapors and gases in the breathing zone of excavation personnel. Results of the organic vapor and gas monitoring will be documented. If necessary, the level of PPE used by personnel will be modified. Table A-7 describes the level of PPE to be used, based on the concentration of organic vapors and gases in the breathing zone of project personnel. The direct-reading real-time organic vapor and gas monitoring equipment will be "response checked" according to the manufacturer's instructions before use each day, and calibrated yearly by the manufacturer

or other qualified personnel. Records of the response check, maintenance, and annual calibration will be maintained on-site.

Colorimetric indicator tubes (e.g., MSA tubes) for organic vapors shall be used at the MK SSHO's discretion whenever the PID instrument measures breathing zone concentrations of organic gases or vapors exceeding 5 parts per million (ppm) PID equivalents greater than background concentrations for time period greater than five minutes or as deemed necessary by the MK SSHO. Colorimetric tubes are used to further characterize the potential exposure. Generally, the frequency of sampling with indicator tubes is driven on the monitoring results of the PID for organic compounds. Based on volatile concentrations reported in the soil sampling results, VOC's are not expected to be a problem. The MK SSHO will have available tubes for benzene, xylene, ethylbenzene, toluene, trichloroethane, and petroleum hydrocarbons.

Additional compounds that will be measured using colorimetric indicator tubes include the following: hydrogen sulfide, carbon dioxide, carbon monoxide, ammonia, nitrogen dioxide, nitrous fumes, and formaldehyde. If levels are detected above action levels, an immediate assessment of job controls will be made, and appropriate modifications incorporated if necessary. See Section 7.2.6 on measurement location and frequency.

7.2.2 Airborne Dust

A direct-reading, real-time instrument capable of detecting airborne dust (MIE Miniram) will be used, based on visible observations of excessive dust. Readings will be taken at locations that reflect approximate concentrations of airborne dust in the breathing zone of project personnel. Results of the airborne dust monitoring will be documented. If necessary, the level of PPE used by personnel will be modified or engineering controls enhanced. The direct-reading, real-time monitoring equipment will be "response checked" according to the manufacturer's instructions before use each day, and calibrated by the manufacturer or other qualified personnel yearly. Records of the response check, maintenance, and annual calibration will be maintained on-site. When such monitoring is conducted and the results are greater than 10 mg/m^3 total dust concentrations, immediate steps will be taken to determine the cause and modify site operations.

7.2.3 Perimeter Monitoring

Perimeter monitoring to evaluate emissions of airborne dust in the Support Zone will be performed periodically during soil excavation, as warranted. When such monitoring is conducted and results are greater than 1.0 mg/m^3, immediate steps will be taken to determine the cause and modify site operations.

7.2.4 Noise Monitoring

Noise monitoring will be performed, as warranted, at the initiation of each task or operation to determine the sound levels associated with the particular task or operation. Sound levels will be determined at locations that best approximate the sound levels at the ear of potentially affected personnel. Noise monitoring equipment will be "response checked" according to the manufacturer's instructions prior to use each day, and calibrated by the manufacturer or other qualified personnel yearly. Records of the response check, maintenance, and annual calibration will be maintained on-site.

7.2.5 Heat Stress and Cold Stress Monitoring

When temperatures at the site are above 65°F, the wet bulb globe temperature (WBGT) may be used to monitor the potential for heat stress. Work/rest periods will be adjusted according to the guidelines stated in the current edition of *ACGIH Threshold Limit Values for Chemical Substances and Physical Agents*. When the clothing worn differs from the ACGIH standard ensemble such as in the case of workers wearing semipermeable or impermeable clothing, guidelines established in the NIOSH/OSHA/USCG/EPA, Occupational Safety and Health Guidance Manual for Hazardous Waste Site Activities, Section 8 should be consulted. The following is a summary from that document.

When employees are required to wear impermeable chemical protective clothing in temperatures exceeding 70°F, employees shall **monitor their pulse rate or** use the "buddy system" to monitor each other's pulse rate at the start of each rest period. If the pulse rate exceeds 110 beats per minute, the next work period shall be shortened by one-third without shortening the rest period. The pulse rate shall be monitored again at the beginning of the next rest period and if the pulse rate exceeds 110 beats per minute, the work period shall again be shortened by one-third. No employee shall be permitted to continue working in PPE if his or her pulse rate exceeds 110 beats per minute continuously. Table A-9 can be used to establish work/rest periods and the frequency of monitoring pulse rates.

Guidelines for the prevention of cold stress and cold stress TLVs shall follow the guidelines stated in EM-381-1-1 Section 06.J and the current edition of *ACGIH Threshold Limit Values for Chemical Substances and Physical Agents*. At air temperatures below 50°F, the air temperature and wind speed shall be monitored by the MK SSHO qualitative assessment of cold stress risk shall be made by comparing wind speed and actual temperature to the assigned equivalent chill temperature depicted on Table 2 in the Cold Stress section of the ACGIH booklet. Unless there are unusual or extenuating circumstances, cold injury to other than the hands, feet, and head is not likely to occur without the development of the initial signs of hypothermia. These symptoms are described in Section 2.5.3. The use of extra insulating clothing

and/or reduction of the exposure period are among the special precautions which should be considered.

Cold weather clothing requirements shall follow the guidance listed in Section 06.J.09. of EM-385-1-1. If work is performed continuously in the cold at an equivalent chill temperature or below 20 °F, heated warming shelters shall be made available nearby the work area and the workers encouraged to use these shelters at regular intervals. A cold weather work/warm-up regimen shall be established when outside ambient temperature is less than a -15 °F in accordance with Table 3 of the ACGIH booklet in the Cold Stress section.

7.2.6 Carbon Dioxide, Hydrogen Sulfide, and Other Chemical Monitoring

At the Bioremediation Facilities during active composting, real-time monitoring using colorimetric indicator tubes for carbon dioxide and hydrogen sulfide will be performed periodically by the MK SSHO in the buildings housing the windrows. If carbon dioxide levels exceed 4,000 ppm inside of the structure, the structure will be evacuated and action taken to vent the structure and maintain a level below 3,000 ppm. The ceiling for hydrogen sulfide is 10 ppm. Evacuation from the structure shall occur at 5 ppm, and action shall be taken to vent the structure and maintain a level below 5 ppm. These compounds will be measured in the cab of the windrow turner machine during turning of the windrow approximately twice per week for the first two weeks. These same compounds will be measured inside of the compost buildings at two locations in the building once per day for the first week of active composting.

Also during active composting, real-time monitoring will be conducted periodically to determine if any detectable levels of methane, carbon monoxide, nitrogen dioxide, nitrous fumes, ammonia, and formaldehyde are present. Monitoring will be completed using colorimetric indicator tubes, except for methane where the multi-gas meter will be used. The multi-gas meter will also be used for hydrogen sulfide and carbon monoxide in addition to the colorimetric indicator tubes. These compounds will be measured in the cab of the windrow turner machine during turning of the windrow approximately twice per week for the first two weeks. These same compounds will be measured inside of the compost buildings at two locations in the building once per day for the first week of active composting. If detectable levels are encountered, then full-shift time integrated samples may be obtained to better quantify the occupational exposure level, and current controls (engineering, administrative and PPE) will be assessed to determine there adequacy. If levels are detected above action levels, an immediate assessment of job controls will be made, and appropriate modifications incorporated where necessary.

7.3 AIR SAMPLING

7.3.1 Organic Compounds

Time-integrated area air sampling for hydrocarbons using personal air sampling pumps will be performed by the MK SSHO during the composting process to determine what, if any, of the hydrocarbon constituents may be present and there levels. Sample collection and analysis will be completed in accordance with the following methods: **(1) NIOSH 1500 for hydrocarbons, (2) NIOSH 1501 for aromatic hydrocarbons, and (3) NIOSH 1003 for halogenated hydrocarbons.**

7.3.1.1 Material and Method

a. NIOSH 1500 - collect on solid sorbent tube, coconut shell charcoal, 100 mg/50 mg; volume of 4 L, flowrate of ≤ 0.20 liter per minute (LPM) based on n-hexane. Analyze by Gas Chromatography Flame Ionization Detector (GC/FID), if hit, analyze with Mass Spectrometry (MS) and provide readout against computer library.

b. NIOSH 1501 - collect on solid sorbent tube, coconut shell charcoal, 100 mg/50 mg; volume of 30 L, flowrate of ≤ 0.20 LPM based on benzene. Analyze GC/FID, if hit, analyze with MS and provide readout against computer library.

c. NIOSH 1003 - collect on solid sorbent tube, coconut shell charcoal, 100 mg/50 mg; volume of 60-70 L, flowrate approximately 0.14 LPM. Analyze by GC/FID, if hit, analyze with MS and provide readout against computer library.

7.3.1.2 Sampling Strategy

During composting process two "area" samples of full shift duration will be obtained **inside** of the structure and two **outside** of the structure representing background for each of the three methods approximately one week into the composting process. Area samples inside of the composting structure during active composting will be obtained as a basis for design and verification of breathing zone sampling strategies. The area samples will be of full shift duration, obtained inside of the compost building near the compost piles, but far enough so as not be hit by the windrow turner machine and any of the compost thrown from its mixing flails. The sample pump and media will be secured to the portable step ladder at approximately 1.5 meter (m) above the floor. Area samples should be biased by representing the worst-case exposure since no one will be in the structure during turning of the windrows once "active" composting begins except for the windrow

machine operator. The windrow machine operator will be working from an enclosed cab with inlet air filtration. One or two personals samples may be obtained from the windrow machine operator, however, the time to complete two to three passes through the compost piles is minimal. Thus sufficient sampling time may not be obtainable. For each method, estimate 4 samples* for analysis (12 samples plus 2 blanks) for a total of 14 samples.

7.3.2 Metals

Time-integrated air sampling for metals using personal air sampling pumps will be performed by the MK SSHO during soil excavation and screening, and during composting when the windrows are mixed to determine what, if any, of the metal analytes may be airborne and there levels. Sample collection and analysis will be completed in accordance with OSHA Method ID-125 or NIOSH Method 7300 for metals scan with analysis by Inductively Coupled Plasma (ICP) or Graphite Furnace Atomic Absorption (GFAA) Spectroscopy.

7.3.2.1 Material and Method

OSHA ID-125 - collect on 0.8 µm cellulose ester membrane (MCE) filter with support pad with 3-piece 37 mm clear styrene acrylonitrile (SAN) cassette. Sample Volume = 720 L at 1.5 LPM. Analytes include aluminum, cadmium, iron, nickel, antimony, chromium, lead, arsenic, cobalt, zinc, beryllium, copper, and magnesium.

7.3.2.2 Sampling Strategy

During soil excavation and screening: (1) obtain two "personal" samples of full shift duration from maximally exposed individuals completing soil excavation and screening tasks; and during composting (2) obtain two "personal" samples from the windrow turning machine operator during first or second week into the composting process during turning of the windrow; and (3) obtain two "area" samples from inside the composting facility of full shift duration. Estimate 8 samples for analysis (6 samples plus 2 blanks).

7.3.3 Explosives Residues

Time-integrated air sampling for explosive residues as airborne aerosols using personal air sampling pumps will be performed by the MK SSHO during soil excavation and screening, and during composting when the windrows are mixed and composting process parameters are monitored. Sample collection will be based on OSHA Method 44 and sample analysis will be conducted in accordance with EPA Method 8330 using High-Pressure Liquid Chromatography (HPLC) Analysis.

7.3.3.1 Material and Method

OSHA 44 - collect on sorbent and filter tube, 270/140 XAD-2 and glass fiber filter, OSHA Versatile Sampler (OVS) Tube. Volume = 240 L, rate = 0.5 LPM, time = 8 hour. Analysis by HPLC in accordance with EPA Method 8330 providing a scan for specific analytes and isomers. Specific analytes include HMX, RDX, TNT, 1,3-DNB, TNB, and 2,4-DNT

7.3.3.2 Sampling Strategy

During soil excavation and screening at the Mine Field A facility, six personal samples of full shift duration, or if necessary, split shift duration will be obtained from two of the laborers. The laborer's are considered the maximally exposed individual for this task. At the composting facility, six personal samples of full shift duration, or split shift if necessary, will be obtained from the Environmental Technician. The Environmental Technician is considered the maximally exposed individual during the composting process since he will be responsible for supervising the building of the windrows, applying water during mixing and refining of the windrows, and for monitoring process parameters.

The construction superintendent may also be in the building during windrow building assisting the Environmental Technician. If this is the case, personal samples of full shift or split shift will be obtained. Four to six area samples inside of the composting structure during active composting will be obtained as a basis for design and verification of breathing zone sampling strategies. The area samples will be of full shift duration, obtained inside of the compost building near the compost piles, but far enough so as not be hit by the windrow turner machine and any of the compost thrown from its mixing flails. The sample pump and media will be secured to the portable step ladder at approximately 1.5 m above the floor. Area samples should be biased by representing the worst-case exposure since no one will be in the structure during turning of the windrows once "active" composting begins except for the windrow machine operator. The windrow machine operator will be working from an enclosed cab with inlet air filtration. One or two personals samples may be obtained from the windrow machine operator, however, the time to complete two to three passes through the compost piles is minimal. Thus sufficient sampling time may not be obtainable.

7.3.4 Biological Hazards

Time-integrated air samples for bioaerosols will be obtained by the MK SSHO inside of the Composting Building during composting after the windrows are mixed, and

compared to background samples taken at a location outside of the perimeter of the Bioremediation site.

7.3.4.1 Material and Method

a. Collect airborne aerosols by impaction on pre-selected growth media plates using a high volume sampling pump with 2-stage Andersen Impactor calibrated using 4-L glass calibration jar with calibration specific culture plates. The sampling flowrate is 28.3 LPM and sampling time will be set at 10 minutes. Samples will be obtained for the respirable and non-respirable fractions (2-stage). Standard Method Agar (SGA) will be the growth media selected for bacteria, and Potato Dextrose Agar (PDA) for fungi (yeasts and molds).

   A separate growth media will be used for each of the following constituents and analyzed accordingly:

   1. Total bacteria (total plate count), subculture from bacteria plate for *E.coli* as a marker from manure.

   2. Fungi (molds and yeast), look especially for the fungus *Aspergillus fumigatus*.

b. Collect samples from source inventory for analysis. May consist of dip slide water samples from collection sump in building for qualitative analysis and contact slide sample from assumed fungal growth on building components such as the floors or structural support members. Samples to be obtained using contact slides and dip slides such as Biotest Diagnostics Corporation Hycon Contact Slides and Hycon Dip Slides.

7.3.4.2 Sampling Strategy

During active composting, six area samples will be obtained inside of the composting structure and six area samples outside of the structure approximately 100 m downwind from the composting structure. The samples will be obtained approximately two and three days into the composting process. Samples inside of the structure will be taken immediately after the windrows are turned.

One sample set consists of the following:

Bacteria - 1 respirable and 1 nonrespirable culture plate
Fungi - 1 respirable and 1 nonrespirable culture plate

Therefore six sample sets inside of the structure for bacteria will require 12 culture plates and six sample sets for Fungi inside of the structure will require 12 culture plates for a total of 24 culture plates. Three of the respirable sized bacteria plates and three of the non respirable sized bacteria plates will be subcultured using velveteen impression at the laboratory for *E.coli* analysis. The outside samples will total 24 the same as the inside samples. Velveteen impression will be obtained for the same amount of samples as the inside samples, 6 samples. An estimated 4 field culture blanks will be obtained in the field.

7.3.5 Wipe Sampling for Explosives Residues and Metals

Wipe samples will be obtained by the MK SSHO to assess the effectiveness of PPE controls and decontamination. Samples will be analyzed for metals and explosive residues.

7.3.5.1 Material and Method

Collect wipe samples using glass fiber filter for explosives residues and paper filters wetted with distilled water for metals. Obtain random surface samples from the inside of used protective coveralls, and from the personnel decontamination shower trailer, specifically the change room area and the lunch/conference room. Samples are obtained by wiping through a 100 cm^2 template moving in concentric squares from the outside to the inside of the sampling area. After wipe sampling, the media is folded with the exposed side in, placed in a sampling vial, and sent to the laboratory for analysis. Clean latex gloves are required for each sample. Metal samples are analyzed at the laboratory by ICP and explosive residues by HPLC.

7.3.5.2 Sampling Strategy

Samples are obtained randomly and unannounced during the first month of operations at the discretion of the MK SSHO. Estimate 10 samples for metals and 10 for explosive residues.

7.4 AIR MONITORING AND SAMPLING REQUIREMENTS

Air monitoring and sampling requirements are shown in Table A-9.

7.5 RECORDKEEPING AND CHAIN OF CUSTODY

Written records of all monitoring will be maintained on site and affected employees will be notified of monitoring results representative of their exposure. For industrial hygiene sampling requiring collection and shipment of a sample to an approved analytical

laboratory, Chain-of-Custody forms will be properly completed and accompany all collected samples in accordance with MK Industrial Hygiene Procedures Manual, Procedure 7.0, titled Analytical Laboratory Procedures. The selected AIHA accredited industrial hygiene lab will be **Lyle Environmental Management, Inc., 1507 Chambers, Road, Columbus, Ohio 43212 (800-336-5953) (Attention: Sean P. Mauduit)**. Turn-around time will be set at 10 working days. Workers will be notified of time integrated sampling results via memo to the designated supervisor.

8.0
GENERAL SAFETY RULES AND PROCEDURES

8.1 GENERAL

Operations shall be conducted in a safe manner consistent with the policies and procedures outlined in this SSHP. The number of personnel shall be restricted to the minimum necessary to complete the required work as an administrative control to limit personnel exposures to potential site chemical, physical and biological hazards. All project personnel assigned to this project are responsible for following this SSHP and for using safe work practices including wearing the PPE specified by the MK SSHO. Project personnel shall report hazards and unsafe conditions and practices to the MK SSHO. All federal, state and local occupational health and safety regulations must be complied with by project personnel. Violations of project procedures may include disciplinary measures up to and including termination.

8.2 RULES AND PROCEDURES

- MK shall have available two 20-lb rated ABC multipurpose dry chemical fire extinguishers; first aid kit including CPR kit (Pocket Mask) and biohazards control kit; emergency eyewash; and spill response equipment (where necessary) available at each controlled work location. MK shall complete the Soil Excavation Maps and post it at each work site including emergency phone numbers. Work zone signs shall be posted in accordance with the requirements of Section 9.1.4 of this SSHP.

- Avoid driving over dry grass that is higher than the ground clearance of the vehicle. Catalytic converters on the undercarriage of vehicles are sufficiently hot to ignite dry prairie grass. Never allow a vehicle with a warm undercarriage to sit in a stationary location over dry grass or other combustible materials.

- Do not eat, drink, smoke, take medications, chew gum or tobacco, or put objects in mouth while in the exclusion zone and contamination reduction zone or when handling samples.

- After handling samples, thoroughly wash hands and, if necessary, face, before eating or putting anything in mouth (i.e., avoid hand-to-mouth contamination).

- At a minimum, wear hard hats, safety glasses and steel-toed boots when inside the work boundaries.

- Remain a safe distance from the excavation equipment when not involved in operation or monitoring activities.

- Do not under any circumstances enter or ride in or on any backhoe/excavator bucket, materials hoist or any other device not specifically designed for carrying human passengers.

- Remain aware of your own and other's positions with regard to rotating equipment and be extremely careful when assembling, lifting and carrying items that may cause pinch point injuries and collisions.

- Be alert to the symptoms of fatigue, heat stress and cold stress and their effect on the normal caution and judgment of personnel.

- Use explosion proof sampling equipment and tools.

- Use ground fault circuit interrupters (GFCI) with all electrical tools and equipment.

- Stand clear of trenches during excavation. Always approach the excavation from upwind.

- Stand upwind, whenever possible, of excavations and other sites where the soil has been disturbed.

- Be alert to potentially changing exposure conditions as evidenced by perceptible odors, unusual appearance of excavated soils, oily sheen on water, or other evidence of possible contamination.

- Do not enter any excavation or trench greater than five feet in depth unless authorized by the MK SSHO.

- Keep hand tools off the ground and centrally located on a plastic cover or area of no contamination whenever possible to avoid tripping hazards and the spread of contamination.

- Use the buddy system at all times while working at the site in controlled work zones. No one is to work alone in the Exclusion Zone or Contamination Reduction Zone without permission from the MK SSHO and MK General Superintendent.

- Minimize truck tire disturbance of all stabilized sites and areas beyond the work area boundaries.

- Cease all work operations on the site at sunset unless the control zone is adequately illuminated with artificial lighting.

- Job Supervisors shall attend the POD meeting prior to the start of the work and conduct pre- and post-entry briefs with all affected workers.

- Avoid direct contact with contaminated materials unless necessary for sample collection or required observation. PPE shall be worn at all times, as required.

- Remove disposable clothing and follow decontamination procedures.

- Always use an appropriate level of personal protection as assigned in this SSHP. Lesser levels of protection can result in otherwise preventable exposure.

- Maintain a high level of awareness of the limitations in mobility, dexterity and visual impairment inherent in the use of Level B and Level C PPE.

- Establish prearranged hand signals or other means of emergency communication when wearing respiratory equipment, since this equipment impairs speech communication.

- Wear hearing protection if you have to shout to communicate at a distance of three feet in steady-state (continuous) noise or when you expect loud impact noise from certain activities. The MK SSHO will assess potential noise exposure and provide recommendations on correct hearing protection devices.

9.0
WORK ZONES

Where a potential for worker exposure to potentially hazardous substances and physical hazards, work zones will be established and the flow of personnel and equipment will be controlled. The establishment of work zones will ensure that personnel are properly protected against hazards present in the work area, work activities and contamination are confined to the appropriate areas, and personnel can be located and evacuated in an emergency.

Prior to the commencement of remedial field activities, work zones shall be established by MK. These work zones are depicted on Soil Excavation Figures contained in Appendix E of the Operational Plan. In addition to the zones, data will be added in the field to show assembly points; evacuation routes; location of first aid equipment, fire extinguisher and eye wash and spill containment equipment; and emergency communications equipment. Posted with the Soil Excavation Map shall be the list of emergency phone numbers and route map to hospital.

9.1 EXCLUSION ZONE (EZ)

The EZ is the area where hazardous substances are present or expected to occur, or health and safety hazards are present. Entry into this area is limited to personnel required to perform the work who are wearing the specified PPE and have attended a Pre-Entry Briefing. Everyone entering the EZ shall have completed the required health and safety training and will participate in the medical surveillance program as necessary. The boundary of the EZ will be determined for each activity and may change depending on activities and conditions.

An EZ will be established to encompass the contaminated area. For this project, the EZ for each soil excavation area will consist of the immediate area of excavation extending outward for approximately 20 feet. The EZ will include the excavated soil classified as potentially contaminated that may be stockpiled.

The EZ will be clearly delineated with signs, barricade tape, fences, or other suitable means. Access control points will be established to regulate the flow of personnel and equipment in an out of the zone and to help verify that proper procedures for entry and exit are followed. PPE levels in the EZ are initially scoped as Level C, depending on the task listed in Table A-6. Decontamination will follow guidelines established in Section 10. Gross contamination will be removed in the EZ followed by additional decontamination in the CRZ. The MK SSHO will monitor activities in the EZ from his position in the CRZ. The boundary line from the EZ to the CRZ will be based on the following criteria:

1. Approximately 20 feet outward from contaminated work area, or as much as necessary, to include the heavy equipment operating in the zone and the temporary staging of any potentially contaminated soil.

2. Perimeter air monitoring using the portable dust/aerosol monitor shows no increase in concentration above background. Background is considered the Support Zone (SZ) area.

9.2 CONTAMINATION REDUCTION ZONE (CRZ)

The CRZ is the transition area between the contaminated area, the EZ and the clean area, the SZ. While designed primarily to reduce the possibility of the support zone becoming contaminated or affected by EZ activities, the CRZ is also used for decontamination of personnel and equipment. No personnel or equipment will be allowed to exit the contamination reduction and exclusion zones without being properly decontaminated except in emergency situations. The immediate area around the EZ extending outward as much as necessary to accommodate the complete length of the longest piece of heavy equipment will be designated the CRZ. Used PPE will be removed and stored in properly marked plastic lined 55-gallon drums or other containers for later disposal.

9.3 SUPPORT ZONE (SZ)

The SZ consists of all areas outside the exclusion and contamination reduction zones. These areas are used for all site activities which are not limited to the EZ or CRZ equipment and material storage, offices, parking, etc. The SZ will also serve as the staging area for all activities to be conducted.

9.4 WORK ZONE CONTROLS

Before site operations begin, the SZ MK site office shall be identified with signs identifying as such. MK shall post signs at entrances to the CRZ and EZ stating the following **or equivalent**:

HAZARDOUS AREA KEEP OUT
DANGER
AUTHORIZED PERSONNEL ONLY
PERSONAL PROTECTIVE EQUIPMENT IS REQUIRED IN THIS AREA

MK shall post signs at the entrance to the CRZ before operations begin, stating:

NO SMOKING, DRINKING OR EATING BEYOND THIS POINT

10.0 PERSONNEL AND EQUIPMENT DECONTAMINATION AND HYGIENE PROCEDURES

All personnel, clothing and equipment leaving an exclusion zone (contaminated or potentially contaminated area) shall be inspected and, if necessary, decontaminated to remove any potentially harmful substances that may have adhered to them. Some equipment/clothing may be disposed of rather than decontaminated. In this case, the used PPE and/or equipment (e.g. disposable sampling equipment) will be stored in properly marked, plastic lined 55-gallon drums in the CRZ. A temporary decontamination station will be constructed at the excavation site and a permanent decontamination facility has been constructed at the Bioremediation Facility. This section gives guidelines regarding the decontamination procedures to be implemented. Final details will be described during the site-specific safety and health briefing prior to commencing field operations.

10.1 EMERGENCY PERSONNEL DECONTAMINATION

Based on the type of emergency that is postulated, the following types of response actions are anticipated for personnel emergencies within the exclusion zone.

A. Critical Triage Condition (life threatening) - Emergency evacuation or extrication from the exclusion zone to contamination reduction zone where emergency medical treatment and stabilization will be attempted until arrival of first responding medical unit. Or, emergency medical treatment and stabilization will be completed in the exclusion zone till arrival of first responding medical unit. In either case, gross decontamination will be completed to the extent possible by removal PPE, wiping patient down to remove contamination and/or wrapping patient to prevent spread of contamination.

B. Marginal Triage Condition (non life threatening) - patient will be evacuated from exclusion zone and treated in the contamination reduction zone followed by decontamination and patient preparation for transport to emergency medical facility. Decontamination could occur first followed by medical treatment in selected scenarios.

10.2 PERSONNEL DECONTAMINATION

Decontamination (decon) stations will be established in the contamination reduction zone. The decon stations will consist of the following, as appropriate:

- Equipment drop to include used respirator receptacle.
- Portable High-Efficiency Particulate Air (HEPA) vacuum for vacuuming PPE before removal. Note: this requirement may be deleted pending results of airborne monitoring and engineering dust controls.

- Boot wash station and glove wash station with boot pick for cleaning initial mud cakes from boots (a tub of water and detergent (Alconox®) with brushes for cleaning and another tub of water for rinsing.

- Sampling equipment wash station (similar to boot wash station).

- Disposable clothing drop. All contaminated or potentially contaminated disposable clothing shall be placed into labeled 6-mil plastic bags within a 55-gallon drum for disposal.

- Personal showers and washing facilities consisting of water, towels and soap. Street clothing shall be stored in lockers provided at the shower facility. Note: this facility is located at the Bioremediation Facility.

10.3 EQUIPMENT DECONTAMINATION

All equipment/tools used in the exclusion zone will be inspected for contamination prior to removal from the site. Any equipment/tools with visible contamination will be cleaned prior to removal from the site. A water and detergent solution will be used for highly contaminated equipment, followed by a high-pressure water rinse if necessary. All water used during decontamination will be contained for disposal. Construction and field equipment will be decontaminated at each temporary decontamination facility. If contamination can not be removed on-site, the affected surfaces of the equipment will be wrapped in plastic and transported to the Bioremediation Facility where more thorough decontamination can be performed prior to release.

10.4 WASHING FACILITIES

A hand and face washing facility shall be made available in each CRZ consisting of water, towels and soap for personnel.

10.5 DECONTAMINATION WASH WATER

Equipment and personnel decontamination areas will be designed to allow for collection of all wash/rinse waters into 55-gallon drums or a larger temporary storage container.

10.6 SANITATION AND PERSONAL HYGIENE

Personnel exiting the CRZ are required to thoroughly wash their hands and face prior to eating, drinking, smoking, or using toilet facilities. Adequate toilet, hand washing and lunchroom facilities free of contaminants shall be designated by MK.

11.0
ON-SITE FIRST AID AND EQUIPMENT

11.1 FIRST-AID AND MEDICAL FACILITIES REQUIREMENTS

At a minimum, 16-unit first aid kits shall be maintained by MK in their office trailer and at each work site. The location of the first aid kit shall be communicated to project personnel as part of the site-specific and pre-entry brief training. Included with the first aid kit shall be a CPR Pocket Mask and a biohazards control kit (universal precautions and clean up kit). The MK SSHO can require upgrades to the first aid equipment requirements as deemed necessary for this job (e.g. insect repellants and sunscreen)

An emergency eyewash, fire extinguisher and spill control kit (if applicable) at each controlled work area. The Bioremediation Facilities will have stationary eyewash/drench equipment. The emergency phone number list and route map to medical facilities shall be posted at each office trailer and at each controlled work zone as part of the MK prepared Soil Excavation Figures.

11.2 REPORT OF FIRST AID CASES

All first aid cases, accidents and incidents shall be promptly reported to the MK SSHO. The MK SSHO shall immediately notify the Navy Technical Representative (NTR) or the Navy Resident Engineer in Charge of Construction (REICC) of all injuries even if preliminary information is available. The MK SSHO and MK PM shall follow the guidance presented in Program Procedure PHSP-04.1. The MK Charleston Project Management Office (PMO) should be notified shortly after notification to the Navy's designated authority. If an on-site official cannot be reached, the MK Charleston PMO still should be promptly notified at (803) 554-0100.

A written report of the injury must be provided to the ROICC or REICC and MK Charleston PMO within 24 hours of the incident via memo form. This report is to include as attachments:

a. Employer's First Report of Injury (Workman's Comp Insurance Form)
b. Supervisor's Accident Investigation Report (MK Form CAS 24/77)
c. Accident Data Report (MK Form 6783/91)
d. Any records provided by the Medical Service Provider such as 1) Hospital Emergency room Report, 2) Examining Physician's designation of work restriction, and 3) Examining Physician's Work Release.

12.0
EMERGENCY RESPONSE PLAN AND CONTINGENCY PROCEDURES

This section describes a contingency plan to be implemented in the event of injuries, illnesses, accidents, and fires. The contingency plan provides guidelines for the proper response to emergency situations, however the actual response will depend on the situation.

In the event of an emergency, the MK SSHO, MK General Superintendent and/or Job Supervisors will direct all personnel to take appropriate action which could include any or all of the following:

- Evacuate all personnel involved to a safe place of refuge.
- Notify emergency services using phone numbers identified in Table A-3.
- Initiate emergency response action.

12.1 PRE-EMERGENCY PLANNING

Prior to start-up of pilot scale, the MK Project Manager, MK General Superintendent and the MK SSHO shall review the Program Procedure PHSP 02.1 and check that all steps necessary to assure effective emergency response requirements and resources are established for this project.

In addition to the guidance provided in this document, all safety meetings and pre-entry briefs shall include emergency response preplanning specific to each task and work site as a topic area. This training will include:

- Assembly Points. If the work activity may result in a release of hazardous substances, more than one assembly point will be specified to ensure that at least one upwind assembly point is accessible. This also pertains to fires and sites subjected to adverse weather conditions. Information must be included on the Soil Excavation Maps.

- Emergency Response Coordinator. The MK SSHO, as the onsite emergency response coordinator, will contact the emergency response providers, account for individuals at the assembly point, and plan the appropriate response.

- Evacuation Routes. Routes will be specified as needed. Information must be included on the Soil Excavation Maps.

- Means of Evacuation. The number of personnel that may be evacuated from the work site by various routes will be evaluated by the MK SSHO.

- Means of Communication. This will include the means of alerting personnel to an emergency at all points in the work site and should consider the sound screening potential of hearing protection, distance and noisy equipment when specifying the use of alarms, horns and sirens. The means of communication with emergency response providers will be considered. Information must be included on the Soil Excavation Maps.

- Designation of a location for first aid services, fire extinguisher(s) and spill control equipment. Information must be included on the Soil Excavation Maps.

- Procedures to be followed by employees who remain to manage critical operations to insure safe shutdown.

12.2 RESPONSIBILITIES

The following is a description of personnel roles, lines of authority, and the emergency response communication/notification responsibilities for site personnel.

12.2.1 Project Personnel

It is the responsibility of all project personnel to recognize conditions that have the potential for resulting in a personal injury or damage to property, and to report the condition immediately to their supervisor or the MK SSHO.

12.2.2 Project Manager

The Project Manager is responsible for assuring adherence to the administrative elements and implementation of the Emergency Response Plan (this section of the SSHP). He will evaluate the site's preparedness for emergency responses and identify special conditions which may require additional preparations. He will ensure that necessary equipment and facilities are provided to support this plan.

12.2.3 MK Certified Industrial Hygienist (CIH)

The CIH is responsible for preparing the Emergency Response Plan (this section of the SSHP). The CIH will develop and review the Emergency Response Plan, evacuation plans, and oversee implementation at the site. The CIH will ensure that supervisors and employees meet the training requirements of the plan and approve the equipment used in the plan. The CIH may designate duties on site to the MK SSHO. The CIH is the designated Health and Safety Manager based in Boise, ID.

12.2.4 MK Site Safety and Health Officer (SSHO)

The MK SSHO is responsible for directing response actions to emergency situations. He will coordinate with project management to ensure the availability of response equipment and supplies, and initiate drills. Emergency response plans will be evaluated over the course of the project by the MK SSHO to keep them up-to-date and to ensure that they are applicable and relevant to emergency response organizations.

12.3 EMERGENCY RECOGNITION AND PREVENTION

Site personnel shall be apprised of hazards and potential life-threatening emergency situations during site-specific training including the project kickoff site specific training, safety meetings and briefs. Means to control hazards and mitigate emergency situations will be addressed at that time.

12.4 SAFETY ZONES

Suitable assembly points will be established at the start of the project for each work site. These assembly points will provide a safe point of refuge for site personnel. Additional information will be provided in the site briefing concerning other hazards that may arise at the site. Safety Zones or assembly points must be included on the Soil Excavation Map.

12.5 SITE SECURITY AND CONTROL

At all times, site personnel working in an area in the near vicinity of an emergency situation shall be apprised of the emergency as soon as possible. Only authorized personnel shall be allowed into the emergency area. As necessary, the emergency area may be cordoned off and access restricted by MK and the Subcontractors.

12.6 EVACUATION ROUTES

Evacuation routes will be established based on scope of work, location of work and atmospheric conditions. Evacuation routes shall be posted in various locations on the site if necessary and included on the Soil Excavation Map. All site personnel will be made aware of evacuation procedures during site-specific training especially pre entry briefings. Topography, layout and prevailing wind conditions shall be considered in establishing evacuations routes and assembly points.

12.7 EMERGENCY DECONTAMINATION

In the event an employee is injured or becomes ill and requires hospital treatment, the extent of decontamination to be performed will be assessed based on severity of the injury or illness and time delay that decontamination may cause. If the employee has any signs of contamination, the ambulance and hospital staff will be notified of this and the nature

of the contamination. Reasonable effort will be expended to decontaminate the victim prior to removal from the site. The medical facilities will be notified of the intended scope of work and the potential for contaminated personnel. The medical facilities will receive copies of all the Material Safety Data Sheets (MSDSs) and/or NIOSH Pocket Guides where available and applicable to this project. The MK SSHO shall contact the medical facility to establish a contact person for the necessary information.

12.8 EMERGENCY MEDICAL TREATMENT AND FIRST AID

See Section 11.

12.9 *COMMUNICATIONS*

The MK SSHO, the MK General Superintendent and the Job Supervisor(s) at each work site area shall be equipped with two-way radios for communications on site as warranted. Emergency Communications equipment will be provided by MK. Additional communications with outside emergency services will be accomplished through the use of cellular telephones if necessary. Both two way radios and cellular phones are to be used for emergency's only. In the radios will be used for standard field construction communication, then the MK SSHO shall establish strict protocols for radio communication and insure all personnel who carry radios understand the protocols.

12.10 CRITIQUE OF RESPONSE AND FOLLOW-UP

All actual emergencies shall be critiqued and follow-up corrective actions shall be implemented as needed. Drills and exercises if completed shall also be critiqued. The critique will be conducted as part of a safety meeting first by supervisory personnel and second with all MK and Subcontractor personnel.

12.11 INITIAL REPORTING AND MANAGEMENT OF INCIDENTS

All emergencies will be promptly reported to the Emergency Response Number x3300, the Environmental Department (x1132, x3114, or x6160), and to the MK SSHO at 812-854-6941 or portable radio Unit 0004. The MK SSHO will assure that the Navy designated authority is notified promptly and directing initial emergency response actions until the arrival of the NSWC Crane designated authority. The designated authority can include the resident officer in charge of security, fire department and/or ambulance services or the Environmental Protection Department Manager.

The following contains the initial response actions to be taken by MK personnel and subcontractors at the work site for the type of incident incurred.

A. Incident Type: Fires in Vehicles and Mobile Equipment, Process Equipment, and Support Structures.

Response Actions:

1. Notify the NSWC Crane Security Desk at extension 3300, and provide the following information:

    a. The name and phone number of the person making the call.

    b. The location of incident.

    c. The type of incident.

    d. Injured or trapped personnel and any potential material release.

2. MK SSHO or Supervisor designates one person to meet the emergency response units at the nearest road where the units will be approaching.

3. MK SSHO or Supervisor assumes initial command of the situation and directs personnel to do one of the following:

    a. Emergency shutdown of process equipment or mobile equipment, evacuate the work zone or immediate area to a safe place of refuge, meet the incoming response units and provide all available information.

    b. **As appropriate,** initiate first fire attack and knockdown using available fire extinguishing equipment followed by evacuating the work zone or immediate area.

B. Incident Type: Preparation for Adverse Weather Condition to Include High Winds, Tornado, Heavy Rains, Snow and Ice Conditions.

Response Actions:

1. MK SSHO or Supervisor notifies the NSWC Crane Security Desk at extension 3300 and provides the following information:

    a. The name and phone number of the person making the call.

    b. The location of the work site(s).

    c. Preparation for adverse weather condition has begun.

d. Permanent structure location where personnel will be relocating to on Base.

2. MK SSHO or Supervisor will direct personnel to shutdown operations, secure loose materials, and park and secure mobile equipment. Personnel shall be directed to report to a permanent building after completing decontamination procedures.

3. MK SSHO or Supervisor will complete accountability and await clearance from Base Security to resume operations or other action.

C. Incident Type: Medical and Rescue Emergencies.

Response Actions:

1. Notify the NSWC Crane Security Desk at extension 3300 and provide the following information:

    a. The name and phone number of the person making the call.

    b. The location of incident.

    c. The type of incident.

    d. Injured or trapped personnel and any exposure to hazardous material.

2. MK SSHO or Supervisor designates one person to meet the emergency response units at the nearest road where the units will be approaching.

3. MK SSHO or Supervisor assumes initial command of the situation and completes or directs personnel to do one or both of the following:

    a. Emergency shutdown of process equipment or mobile equipment and any other necessary action to mitigate or control the incident.

    b. Initiate emergency first aid actions until arrival of emergency units.

D. Incident Type: Mobile vehicle accident or incident during transport of contaminated soil from work area to Bioremediation Facility.

Response Actions:

1. Notify the NSWC Crane Security Desk at extension 3300 and provide the following information:

    a. The name and phone number of the person making the call.

    b. The location of incident.

    c. The type of incident.

    d. Injured or trapped personnel and estimate of material released.

2. MK SSHO or Supervisor designates one person to meet the emergency response units at the nearest road where the units will be approaching.

3. MK SSHO or Supervisor assumes initial command of the situation and directs personnel to do the following:

    a. Cordon off the accident/spill area.

    b. Cover the spilled contaminated soils with canvas tarps or visqueen.

    c. Install temporary environmental protection and/or erosion control measures to contain potential surface run-off contamination.

13.0
LOGS, REPORTS, AND RECORDKEEPING

13.1 SAFETY AND HEALTH LOGBOOK

The MK SSHO shall maintain a Project Safety and Health Logbook for the duration of work activities at the site. Entries in the logbook shall be time sequenced. The entries must be written in ink and the bottom of each page must be signed. The logbook shall be hard bound. No pages will be removed from the log book. Corrections must be lined out and initialed. The logbook will contain specific information recorded on a daily basis utilizing the Form shown in Figure A-4. The logbook will contain specific information on safety and health activities and to further describe or clarify information recorded on the Figure A-5, the SSHP Daily Logbook Report form.

A separate file folder shall be maintained for Figure A-4. Separate file folders shall be established for this SSHP; calibration data sheets if not attached to Figure A-4; safety and IH instrument serial numbers and shipping papers; field specific safety and health procedures; all safety and health related permits; and weekly safety inspections. Records of training and site orientations; briefings including pre-entry briefs; Subcontractor prepared equipment inspection sheets, if applicable shall also be maintained in file folders by the MK SSHO. In addition, the MK SSHO shall copy and file all receipts for MK equipment rentals and consumables upon delivery to the site and the inventory shall be verified as acceptable.

13.2 REPORTS

A weekly site safety and health inspection report shall be prepared by the MK SSHO. This report shall identify work activities, safety and health-related deficiencies, and corrective measures. As a minimum, the checklist shown in Figure A-5 shall be completed by the MK SSHO. All near miss incidents and incidents that result in property damage, personnel injuries or illness will be investigated and notification/reporting requirements shall be followed in accordance with PHSP 04.1.

13.3 FIELD MASTER COPY OF SSHP

The MK SSHO shall maintain a field master copy of this SSHP document to include all redlines and the completed Soil Excavation Maps. This copy shall be properly filed with project records at the completion of the project and sent to MK PMO office in Charleston.

13.4 RECORDKEEPING

The MK SSHO shall maintain records of all injuries and illnesses for MK employees only incidental to the work in accordance with 29 CFR 1904, including copies of the Worker's Compensation First Report of Injury. Accidents and Incidents data reporting requirements

shall be managed in accordance with Program Procedure PHSP-04.1 for both MK and Subcontractor personnel as stated in Section 11.3.

A record of all first aid treatments not otherwise recordable shall be maintained and furnished to MK or the Navy's designated authority upon request. Monitoring and sampling results shall be managed as stated in Section 7.5 of this plan.

13.5 SAFETY AND HEALTH PROJECT COMPLETION REPORT

The MK SSHO shall complete a safety and health project completion report at the conclusion of the field work associated with pilot scale. The purpose of the report is to a self assessment summarizing effectiveness of the safety and health program implemented in the field; lessons learned and suggestions for program improvement; accident and incidents; air monitoring and sampling results including ratings on instrument useability; and how well the original prepared AHA worksheets reflected field conditions. The report shall be directed to the MK SouthDiv Program Health and Safety Manager within ten working days after project completion.

The Cleveland safety and health representative, Frank J. Petrik, has responsibility for providing a summary write-up on all industrial hygiene time integrated sampling results. This summary shall be integrated into the project completion report.

14.0
ON-SITE WORK PLANS

A Pilot Scale Operational Plan has been prepared of which this document is designated Appendix A to define the work tasks and identify the work objectives. The means and personnel required to complete the task is identified along with consideration for methods, logistics, quality control/assurance and resources.

15.0
COMMUNICATION PROCEDURES

15.1 RADIO COMMUNICATION, TELEPHONE, ALARMS AND DRILLS/EXERCISES

Refer to Section 12.10 of this Plan. Two-way radios in coordination with office telephones will be the primary choice of emergency communication. An emergency alarm, such as an air horn, shall be available if necessary at each major work site to warn personnel of an emergency. Personnel shall be trained on what actions they are to take if the alarm is sounded to include evacuation routes and assembly points. Drills and exercises shall be conducted to ensure that communication methods are adequate. The MK SSHO will test the two-way communication system for confirmation of emergency communication using NSWC Crane protocols.

16.0
SPILL CONTAINMENT PLAN

16.1 GENERAL

Spill and release accident scenarios during remediation could occur and involve residue process material and reinstates from decontamination activities. The following information will be used by project personnel to respond to and mitigate any releases on the project site.

In the event of a spill or release, the MK SSHO, MK General Superintendent and/or Job Supervisors will direct all personnel to take appropriate action which could include any one or all of the following:

- Initiate spill response action and notify emergency services.
- Notify emergency services as identified in Table A-3.
- Evacuate the work zone to a safe place of refuge.

16.2 PREPLANNING FOR SPILL CONTROL

Remedial construction activities will be reviewed for release potential and the capability of on-site personnel to adequately respond. Base personnel will be contacted to determine their capability to respond to various releases. All aspects of the Emergency Response Plan as described in Section 12, will be reviewed by site personnel to ensure adequacy and that resources are available.

During mobilization activities for this project, the MK Project Manager, MK SSHO, MK General Superintendent shall review the Program Procedure PHSP 03.1 and the Base Oil and Hazardous Substances Spill Contingency Plan. After review, they shall execute the steps necessary to assure effective spill response planning requirements and resources are established for this project.

MK will cooperate with the base; other site contractors; and federal, state and local directors of emergency preparedness and response to ensure a coordinated effort in preparing for a spill emergency, with response plans that are compatible and integrated. Prior to the start of work, MK will review PHSP 03.1 and meet with site representatives on spill control and assure the SSHP is consistent with site requirements for spill control. Specific roles and responsibilities will be reviewed for MK and Navy personnel. The Base Fire Department will be notified of any spills classified above incidental and will assist in spill containment. The Base Response Team (SRT) will provide overall command and control of the clean-up activity for spills classified above incidental until relieved by a higher authority.

16.3 SPILL AND FIRE CONTROL MATERIALS AND EQUIPMENT

When planning to move or handle drums (or other containers) containing hazardous or special waste materials, the following shall be kept available in areas where spills, leaks or ruptures may occur: 1) salvage drums or containers (approved by the U.S. Department of Transportation); 2) suitable quantities of proper absorbent materials; 3) portable containing material; 4) neutralizing agents; and 5) fire extinguisher(s).

Drums and containers used during a clean-up will be appropriate to the hazardous substances they are meant to contain, and will meet the regulations promulgated by DOT, 49 CFR Parts 171-179, OSHA, 29 CFR 1910.120, and EPA 40 CFR 262. Drums and containers will be inspected for defects and their integrity assured prior to being filled with any non-solid hazardous or special waste substance.

A spill of material can be contained with porous or absorbent barriers. Absorbent materials can take several configurations (pillows, sheets, booms, loose chips, particle beads, and fibers) that may be set in place, or scattered by hand. Preferred sorbents are inert nonreactive clay minerals (neutralizing agents may be added), or specific formulations which provide automatic neutralization or vapor control.

16.4 SPILL CONTROL MEASURES

Stopping the leak or spill at its source may involve turning off pumps or closing valves. Returning a container to an upright position, transferring wastes to other containers, or moving containers to less dangerous locations may, in some circumstances, be possible, but should not be attempted if the identification of the substance is not known unless Level B PPE Protection is worn and decontamination stations have been established. Similarly, the patching of an active leak is not advised until an initial "Size-Up" of the situation is made and guidance established in Section 16.6 has been followed.

16.5 DRUM, CONTAINER, AND TANK HANDLING AND MOVING PROCEDURES

Drums, containers, and/or tanks of hazardous or special waste substances will not be moved until the requirements for preparations described in a task work plan and SSHP have been completed (i.e., all required equipment and materials are at the work site ready for use, and the employees have been familiarized with their responsibilities, the emergency response procedures, and the potential hazards associated with the contents of the drums and containers).

Work site operations will be organized to minimize the amount of drum or container movement. Each drum or container will be inspected before it is moved to ensure that it can be handled without suffering a rupture or puncture, and relocated without having the contents spill or leak.

Unlabeled or unmarked drums and containers will be considered to contain hazardous substances and handled accordingly until the contents are positively identified and labeled. Drums and containers under pressure, as evidenced by bulging or swelling, will not be moved until such time as the cause for excess pressure is determined and appropriate containment procedures have been implemented to protect employees from explosion.

Equipment used to handle the drums and containers will be selected, positioned, operated, and maintained to minimize any contact that could rupture, puncture, dent, or drop drums and containers holding hazardous or special waste substances, and the potential for equipment ignition sources to ignite vapors released from ruptured drums or containers shall be controlled.

Drums and containers that cannot be moved without rupture, leakage or spillage will be transferred to a sound container using a device specified for the material being transferred. During liquid transfer of flammable or combustible liquids, bonding and grounding equipment shall be utilized.

16.6 INITIAL REPORTING AND MANAGEMENT OF INCIDENTS

All spill emergencies classified above incidental shall be promptly reported to the Emergency Response Number x3300, the Environmental Department (x1132, x3114, or x6160), and to the MK SSHO at 812-854-6941 or portable radio Unit 0004. The MK SSHO will assure that the Navy's Technical Representative (NTR) or ROICC is notified promptly.

Incidental Release (defined) - a release of hazardous material where the substance can be absorbed, neutralized, or otherwise controlled at the time of release by employees in the immediate release area, or by maintenance personnel. In addition, the quantity of released material does not exceed any EPA Reportable Quantities.

The MK SSHO, the MK General Superintendent and the Job Supervisor(s) are responsible for directing initial emergency response actions until the arrival of the NSWC Crane designated authority. The designated authority can include the officer in charge of security, fire department and/or ambulance services. The following contains the initial response actions to be taken by MK personnel and Subcontractors at the work site for spill and release emergencies:

Response Actions:

1. Classify spill as Incidental or an Emergency.

2. If Incidental (as defined above): 1) notify immediate supervisor; 2) assess hazard potential, establish precautions and PPE requirements; 3) begin clean-up of spill.

3. If Emergency, initiate response action in accordance with the following steps:

   A. Quickly assess probability of safely stopping spill. If physical, chemical, or biological health hazards exist, immediate evacuate the area to a safe distance upwind and upgrade from the spill.

   B. Notify the **Crane Security Desk at X 3300** and provide the following information:

      1. Name and phone number of person calling;

      2. Location of incident;

      3. Type of incident;

      4. If anyone is injured or trapped and the estimated volume of material released.

   C. MK SSHO, MK PM or Job Supervisor(s) designates one person to meet the emergency response units at the nearest road where the units will be approaching.

   D. MK SSHO, MK PM or Job Supervisor(s) assumes initial command of the situation and directs personnel to do one of the following:

      1. Emergency shutdown of process equipment or mobile equipment, evacuate the work zone or immediate area to a safe place of refuge and meet the incoming response units and provide all available information.

2. Initiate initial spill response using available spill response equipment only for small emergency spill events where personnel are trained to mitigate. Evacuate the work zone or immediate area if there are any health threats or risks to personnel.

3. MK's PM or designee shall immediately notify the Navy's Designated Authority and the MK PMO. The Navy's Designated Authority is the ROICC assigned to this project.

17.0
CONFINED SPACES

Permit-required confined space entry is not anticipated on this project. If entry is required in an excavation that is greater than 5 feet in depth, the excavation must be treated initially as a permit-required confined space. Atmospheric monitoring must be completed before the excavation can be downgraded to nonpermit-required confined space. Engineering controls (e.g. sloping, shoring, shields) must be in place to safeguard the excavation from collapse. Any confined space entry must follow MK Procedure 9.0 found in the Industrial Hygiene Procedures Manual (MK 1994a).

TABLES

Table A-1
Site Description and Contaminants

Identifier	Location/Description	Scope of Work	Contaminants
SWMU 12/14	Mine Fill A, west central portion of NSWC, H-17 off of H-45.	Soil excavation and transport to Bioremediation Facility, site restoration, and soil sampling.	Major contaminants include TNT, HMX and RDX in soils are the most significant.
Bioremediation Facility	Located south of Burns City Gate off of H-161.	Soil excavated from SWMU 12/14 will be processed at this facility using composting technology.	Contaminants in Soil to be processed and mixed with amendments are described in Section 1.2.

Table A-2
Potential Contaminants

Potential Contaminant	Description	Exposure Limits	Signs and Symptoms	First Aid
Acetone (Very low levels)	Colorless liquid with a fragrant, mint-like odor.	OSHA PEL of 1000 ppm as 8 hr TWA.	Irritant to eyes, nose, and respiratory system. May cause dermatitis upon skin contact.	Irrigate eyes immediately with water. Soap wash skin promptly. Seek medical attention immediately.
Barium (Very low levels)	White odorless solids, soluble compounds may be liquid compounds.	OSHA PEL 10 mg/m^3 as 8 hr TWA.	Upper respiratory irritant. Irritant to eyes and skin. Ingestion causes gastroenteritis, muscle spasm.	Irrigate eyes immediately with water. Soap wash skin promptly. Provide respiratory support. Seek medical attention immediately.
Carbon Dioxide, off-gas component of aerobic composting.	Colorless, odorless gas. Normal constituent of air, about 3,000 ppm.	OSHA PEL of 5,000 ppm.	Cause headache, dizziness, restlessness; dyspnea, increased heart rate, pulse and blood pressure; convulsions and asphyxia at high concentrations	Provide respiratory support. Seek medical attention immediately.
Cadmium (Very low levels)	Metal: silver-white, blue-tinged lustrous, odorless solid.	OSHA PEL 2.5 ug/m^3 as 8 hr TWA.	Inhalation causes pulmonary edema, dyspnea, cough and chest pain. Ingestion causes chills, muscle aches, nausea, vomiting and diarrhea.	Irrigate eyes immediately with water. Soap wash skin promptly. Seek medical attention immediately.
Chromium metal (Very low levels)	Blue white to steel gray, lustrous, brittle, hard solid.	OSHA PEL 0.5 mg/m^3 as 8 hr. TWA	Histologic fibrosis of lungs by inhalation. Causes sensitive dermatitis. Poison by ingestion.	Irrigate eyes immediately with water. Soap wash skin. Provide respiratory support. Seek medical attention immediately.

Table A-2
Potential Contaminants

Potential Contaminant	Description	Exposure Limits	Signs and Symptoms	First Aid
Lead (Very low levels)	A heavy, ductile, soft grey solid. Noncombustible solid. (May be in soil as a biodegraded product of leaded gasoline.	OSHA PEL 50 ug/m^3 as 8 Hr. TWA	Weakness, lassitude, and insomnia. Facial pallor, anorexia, low weight, and malnutrition. Constipation, abdominal pain and colitis. Anemia, gingival lead line, tremor, Encephalopathy, Nephropathy. Irritant to eyes. Hypertension.	Irrigate eyes immediately with water. Soap wash skin promptly. Provide respiratory support. Seek medical attention immediately.
Formaldehyde	Nearly colorless gas with a pungent, suffocating odor.	OSHA PEL 0.75 ppm, STEL of 2 ppm.	Irritant to eyes, nose, throat and respiratory system.	Irrigate eyes immediately with water. Soap wash skin promptly. Provide respiratory support. Seek medical attention immediately.
Hydrogen Sulfide (May be off gas component of composting)	Colorless gas with a strong odor of rotten eggs.	OSHA Ceiling of 20 ppm, NIOSH Ceiling of 10 ppm.	Irritant to eyes and respiratory system. Causes dizziness, headache and eye pain. CNS depressant. Asphyxiant.	Irrigate eyes immediately with water. Provide respiratory support. Seek medical attention immediately.
Nitrogen Dioxide	Yellowish-brown liquid or reddish brown gas with a pungent acrid odor.	OSHA Ceiling of 5 ppm and NIOSH ST of 1 ppm.	Irritant to eyes, nose, throat, causes cough and decrease in pulmonary function.	Irrigate eyes immediately with water. Soap wash skin promptly. Provide respiratory support. Seek medical attention immediately.
Diesel exhaust including oxides of nitrogen.	Appearance and odor vary depending upon the specific diesel exhaust component.	Use STEL of 1 ppm.	Irritant to eyes and respiratory system, may cause pulmonary function changes.	Remove to fresh air, provide respiratory support. Seek medical attention immediately.

Table A-2
Potential Contaminants

Potential Contaminant	Description	Exposure Limits	Signs and Symptoms	First Aid
DNT (Dinitrotoluene) (Majority of amino DNTs undetected in soil samples, can exist as metabolite during composting)	Orange-yellow crystalline solid with a characteristic odor.	OSHA PEL 1.5 mg/m^3 as 8 hr. ACGIH 8 hr TWA of 0.15 mg/m^3	Causes anoxia; cyanosis; anemia; jaundice; reproductive effects; suspected human carcinogen.	Irrigate eyes immediately with water. Water flush promptly. Soap wash skin promptly. Provide respiratory support. Seek medical attention immediately.
HMX (Cyclotetramethylenetetranitramine)	White-crystalline solid.	No exposure limits listed.	May cause Irritation to eyes, skin and respiratory system.	Irrigate eyes immediately with water. Water flush promptly. Soap wash skin promptly. Provide respiratory support. Seek medical attention immediately.
RDX (Cyclonite)	White crystalline powder, combustible solid.	OSHA PEL 1.5 mg/m^3 as 8 hr. ACGIH 8 hr TWA of 1.5 mg/m^3 Note: skin designation	Skin, eye and respiratory irritations. Very similar to TNT.	Irrigate eyes immediately with water. Soap wash skin promptly. Provide respiratory support. Seek medical attention immediately.
TNT (Trinitrotoluene)	Colorless to pale yellow, odorless solid or crushed flakes. Combustible solid.	OSHA PEL 1.5 mg/m^3 as 8 hr. TWA, ACGIH 8 hr TWA of 0.5 mg/m^3 Note: skin designation.	Causes liver damage, jaundice; cyanosis; sneezing; cough; sore throat; peripheral neuropathy; muscle pain, kidney damage; cataract; sensitive dermatitis; leukocytosis; anemia and cardiac irregularities.	Irrigate eyes immediately with water. Soap wash skin promptly. Provide respiratory support. Seek medical attention immediately.

Table A-2
Potential Contaminants

Potential Contaminant	Description	Exposure Limits	Signs and Symptoms	First Aid
Biological constituents to include total bacteria, *E. Coli*, and fungi (yeasts and molds). Constituents will be present in amendments and may become airborne during composting operations.	Microscopic organisms	None established, will compare to background levels or other data from current literature. Bacterial or fungal concentrations above 10,000 colony forming units per meter cubed (cfu/m^3) in total or above 500 cfu/m^3 for each specific group of organisms or species of a potentially pathogenic nature should be considered a threat to the worker's health. For gram-negative bacteria, a TLV of 1000 cfu/m^3 has been proposed, since a number of species of this group are able to release pathogenic endotoxins, which may cause an additional health hazard.	Varies, depending on sensitivity. Can include respiratory system irritation, distress and infections.	Remove from source, seek medical attention.

Note: Data is Table derived from NIOSH 1994, OSHA 1996 and ACGIH 1996-1997.

Table A-3 Personnel Names and Telephone Numbers

Contact	Person or Agency	Telephone
Fire Department	**NSWC Fire Department (Base)**	**3300 emergency** **(812) 854-1235**
Ambulance Service	**NSWC Ambulance (Base)**	**3300 emergency** **(812) 854-1100**
Law Enforcement	**NSWC Security (Base)**	**(812) 854-3318**
Robert Hlavacek	MK Program Manager (MK PMO)	(803) 554-9367
Martin Wilson	MK Field Operations Manager	(803) 554-6003
~~Steve Downey~~ **David Beall**	MK Site Project Manager	Office: (812) 854-6941
Wally Metcalf / **Tom Dougal**	MK Site Superintendent	Office: (812) 854-6941
Richard Spurgeon	MK Site Safety and Health Officer	Cellular: (812) 639-8356 Unit 0004 radio
Don Miller	MK Project Engineer / **Science Manager**	Office:(216) 523-2121
~~Randy Smith~~ **Steve Cory**	MK Site Quality Assurance/Quality Control Supervisor	Office: (812) 854-6941
William Piispanen	MK Health and Safety Program Manager	(208) 386-5930
Cmdr. Fred Smith	NSWC Crane PWD/Eng. Dept	(812) 854-1834
Capt. J.M. Carney	NSWC Base Commander	(812) 854-1210
Jim Hunsicker or ~~Tom~~ ~~Brent~~ **Chris Freeman**	NSWC Environmental Protection Services	(812) 854-6160
Adrienne Townsel-Wilson	SOUTHNAVFACENGCOM	(803) 743-0582
Brent Robertson	ROICC(NTR)	(812) 854-3318
Lt. Dale Eads	NSWC E.O.D. (Base)	(812) 854-3456
Dale Groh	NSWC Safety Directory	(812) 854-3601
Poison Control Center	Poison Control Center	(800) 942-5969
National Response Center	National Response Center	(800) 424-8802
Regional USEPA	USEPA (Region 5) Emergency State of Indiana Emergency	(312) 353-2318 (317) 233-7745
Hospital	NSWC Base Medical Facility Head Nurse (Mary Muessig)	(812) 854-1220 (812) 854-4319

Table A-3 Personnel Names and Numbers (continued)

Contact	Person or Agency	Telephone
Hospital	Bedford Medical Center 2900 West 16 th Street Bedford, IN 47432	(812) 275-1200
Hospital	Bloomington Hospital 601 West Second Street Bloomington, IN	(812) 336-9515
Utility Locator Service	Public Works Dept.	(812) 854-1834

Directions to NSWC Medical Department On-site:

The NSWC Fire Department coordinates the on-site ambulance service. The Medical Department is located in Building 12, off of H-2 just north of H-5.

Directions to Bedford Medical Center:

From Main Gate, head east on Highway 58 to the city of Bedford, then turn left onto 16th Street. Distance to hospital is approximately 20 miles. From Bedford Gate, head east on 158 to the City of Bedford. 158 turns into 16th Street.

Directions to Bloomington Hospital:

Exit NSWC Crane on H5-45 through the Bloomington Gate, then follow Highway 45 North to Bloomington. At the intersection of Highway 45 and Highway 37, continue straight ahead over the bypass (Bloomfield Road), and follow Bloomfield Road north until it becomes 2nd Street. Continue on 2nd Street and the hospital will be on right-hand side of the road.

Note: MK SSHO is to ensure this Table and Figure A-1 are included with the Soil Excavation Maps posted at the job site. In addition, the Table and Figure must be posted at each office location.

Notify the MK SSHO of any changes in work conditions which may affect the health and safety aspects of the task. The Superintendents or designated supervisors are responsible for conducting Plan-of-the-Day meetings, Pre-Entry and Post-Entry Briefings were necessary, weekly safety meetings, and conducting or ensuring that other training is completed.

Table A-4
Training Requirements

Identifier	Location	40-Hr. Haz. Waste	Haz. Waste Annual Ref.	Haz. Waste Super-visor	Weekly Safety Mtg.	Haz. Com.	CPR/ First Aid	Respira-tory Protec-tion	Site-Speci fic	POD, Pre- & Post-Entry Brief	Other
SWMU 12/14	Mine Fill A	Y	Y	Y	Y	Y	Y	Y	Y	Y	N
Sampling	All locations	Y	Y	Y	Y	Y	Y	Y	Y	Y	Y[1]
Soil and wastewater sampling	Bioremediation Facility	Y	Y	Y	Y	Y	Y	Y	Y	Y	Y[1]
Pilot Start-up and operation of facility	Bioremediation Facility	Y	Y	Y	Y	Y	Y	Y	Y	Y	Y[1]

Y = Yes, N = No, 0 = Optional

Notes:

1 - 49 CFR Part 172 Subpart H for personnel required to classify, mark, select packaging, inspect, load and transport hazardous materials.

Table A-5 Selection of Personal Protective Equipment

PPE	Level D	Modified Level D	Level C	Level B
Coveralls or other approved working apparel	Yes	Yes	Yes	Yes
Chemical-resistant clothing (coveralls; hooded, one- or two-piece chemical-resistant coveralls)		Yes		
Chemical-resistant clothing (coveralls; hooded one- or two-piece chemical splash suit; chemical-resistant hood and apron; disposal chemical-resistant coveralls)			Yes	
Chemical-resistant clothing (coveralls and long-sleeved jacket; one- or two-piece chemical splash suit; disposal chemical-resistant one-piece suit)				Yes
Boots, leather or chemical resistant, protective toe and steel shank meeting ANSI Z41.1 (29 CFR 1926.28(a).	Yes			
Boots (inner), chemical resistant, protective toe and shank meeting ANSI Z41.1 (29 CFR 1926.28(a)).		Yes	Yes	Yes
Boot covers (outer), chemical resistant (disposable)		Optional	Optional	Optional
Safety glasses or chemical splash goggles, meeting ANSI Z87.1-1979 for "Industrial Safety Glasses"	Yes	Yes	Yes	
Face shield	Optional	Optional	Optional	Optional
Gloves (cotton/leather)	Optional			
Gloves (inner), chemical resistant or liners		Optional	Yes	Yes
Gloves (outer), chemical resistant		Yes	Yes	Yes
Long underwear		Optional	Optional	Optional
Hardhat	Yes	Yes	Yes	Yes
Positive pressure, full-facepiece with nose cup, self-contained breathing apparatus (SCBA) or positive pressure, supplied-air respirator with escape SCBA (MSHA or NIOSH approved) (Note: escape SCBA may not be required)				Yes
Air-purifying respirator, half-face or full face with suitable cartridge (MSHA or NIOSH approved)			Yes	

Note: Optional requirements to be determined by the MK SSHO based on additional evaluation of site conditions and hazards analysis. Note: safety glasses not required when wearing full-face APR.

Table A-6
Minimum Personal Protective Equipment Requirements by Task

Site	Activity	PPE
Soil excavation at SWMU #12/14	1. Excavate, screen, and load soils for Composting 2. Site restoration 3. Decontamination and rock washing 4. Transporting contaminated soil (driving trucks)	1. Level C, modify based on air monitoring/sampling results. 2. Level D 3. Level C 4. Level D
SWMU Sampling	1. Obtain soil and/or groundwater samples	1. Modified Level D
Pilot Scale Start-Up and Operations of Bioremediation Facility	1. Offload and grind amendments 2. Load amendment blend in windrows 3. Offload contaminated soil into windrows 4. Turn and mix windrows 5. Monitor windrow parameters and field screening/confirmation sampling 6. Load and transport treated soils 7. Decontamination water management 8. Composting building housekeeping 9. Maintenance and Upkeep of Equipment	1. Modified Level D, use approved Dust Mask. 2. Modified Level D, use approved Dust Mask. 3. Level C, modify where necessary. 4. Level C, modify where necessary. 5. Modified Level D, use approved Dust Mask. Level C if working in building during windrow turning. 6. Modified Level D, use approved Dust Mask during loading. Level D when clear of decon station. 7. Modified Level D. 8. Modified Level D, modify where necessary. 9. Level D, modify per task based on manufacturer's recommendation.

Level C respiratory protection includes half-mask air purifying respirator (APR) with HEPA cartridges and indirect venting safety goggles, or full-face APR with HEPA cartridges. Protective suits are standard Tyvek™ or equivalent for particulate protection. Either rubber boots or latex shoe covers can be used. Either rubber, vinyl coated or latex gloves (15-20 mils) can be used.

Modified Level D includes same protective clothing as Level C except for Dust Masks where specified should be 3M Brand 8710 *Dust/Mist Respirator or equivalent where Dust Mask is specified. In some cases leather work gloves can be substituted* for chemical protective gloves (e.g. handling amendments, off-loading amendments and building maintenance).

Table A-7
Airborne Contaminant Response Criteria

Contaminant	Level	PPE	Monitoring Frequency	Actions Taken
Volatile organic compounds. Both direct reading and time integrated samples will be obtained. Time integrated samples will be obtained at the compost facilities. Level C PPE will be used at excavation sites and the composting facility. APR's selected are HEPA but can be modified to include organic cartridges depending on VOC levels. Frequency of monitoring is subjected to change as field experience is obtained.	No more than 5 ppm above background, no benzene detected	Level D or Modified Level D	Prior to each shift and reentry following 30 minute vacancy or as warranted	Continue periodic monitoring
	Greater than 5 ppm above background but less than 10 ppm above background. No benzene detected, no Action Level for any organic exceeded.	Level D or Modified Level D	At least once every hour, when change in operation occurs, or when requested by workers	Monitor for benzene or other organics. Continue periodic monitoring
	Greater than 10 ppm above background or benzene detected or Action Level exceeded for any organic.	To be determined by SSHO	To be determined by SSHO	Stop work and notify SSHO

Table A-7
Airborne Contaminant Response Criteria

Contaminant	Level	PPE	Monitoring Frequency	Actions Taken
Lead (inorganic)	Less than action level for lead (30 µg/m³) and/or no visible observation of excessive dusts	Level C	Periodic per plan	Continue monitoring and/or sampling and observations
	Greater than action level or visible observation of excessive dusts.	Level C or as determined by SSHO	Representative personnel sampling and monitoring to be conducted or continued	Stop work and notify SSHO
	Greater than OSHA PEL or greater than 10 mg/m³ total dust.	As determined by SSHO	Representative personnel sampling and monitoring to be conducted or continued	Stop work and notify SSHO
Oxygen	Less than 19.5%	To be determined by SSHO	To be determined by SSHO	Stop work, exit area and immediately notify SSHO
Cadmium	Less than action level for cadmium of (2.5 µg/m³) and/or no visible observation of excessive dusts	Level C	Periodic per plan	Continue monitoring and/or sampling and observations
	Greater than action level or visible observation of excessive dusts.	To be determined by SSHO	To be determined by SSHO	To be determined by SSHO
	Greater than OSHA PEL or greater than 10 mg/m³ total dust.	To be determined by SSHO	To be determined by SSHO	To be determined by SSHO

Table A-7
Airborne Contaminant Response Criteria

Contaminant	Level	PPE	Monitoring Frequency	Actions Taken
Explosives Residues	Less than action level for the explosive compound having the lowest AL (DNB, 0.5 mg/m^3) and/or no visible observation of excessive dusts	Level C	Periodic per plan	Continue monitoring and/or sampling and observations
	Greater than action level or visible observation of excessive dusts.	To be determined by SSHO	To be determined by SSHO	To be determined by SSHO
	Greater than OSHA PEL or greater than 10 mg/m^3 total dust.	To be determined by SSHO	To be determined by SSHO	To be determined by SSHO
Hydrogen Sulfide	Greater than 10 ppm	To be determined by SSHO	Periodic per plan inside of Composting Facility	Stop work, shut off equipment and evacuate Composting Facility. Notify SSHO; ventilate structure
Carbon Dioxide (CO_2)	Greater than 4,000 ppm	To be determined by SSHO	Periodic per plan inside of Composting Facility	Stop work, shut off equipment and evacuate Composting Facility. Notify SSHO; ventilate structure
Ammonia Off-gas from Compost Piles	*Greater than 25 ppm*	*Upgrade respirator* cartridges to include ammonia cartridge.	*Periodic per plan inside of* Composting Facility	*Stop work, shut off* equipment and evacuate Composting Facility. Notify SSHO; ventilate structure, and upgrade respirator cartridges

Table A-7
Airborne Contaminant Response Criteria

Contaminant	Level	PPE	Monitoring Frequency	Actions Taken
% LEL	Equal to or greater than 10%.	To be determined by SSHO	To be determined by SSHO	Stop work, shut off equipment, remove ignition sources if safe to do so; notify SSHO

Table A-8

Frequency of Physiological Monitoring for Fit and Acclimatized Workers[1]

ADJUSTED TEMPERATURE[2]	IMPERMEABLE ENSEMBLE
90°F (32.2°C) or above	After each 15 minutes of work
87.5°-90°F (30.8°-32.2°C)	After each 30 minutes of work
82.5°-87.5°F (28.1°-30.8°C)	After each 60 minutes of work
77.5°-82.5°F (25.3°-28.1°C)	After each 90 minutes of work
72.5°-77.5°F (22.5°-25.3°C)	After each 120 minutes of work

[1]For work levels of 250 kilocalories/hour.

[2]Calculate the adjusted air temperature (ta adj) by using this equation:

ta adj °F = ta°F + (13 x % sunshine).

Measure air temperature (ta) with a standard mercury-in-glass thermometer, with the bulb shielded from radiant heat. Estimate percent sunshine by judging what percent time the sun is not covered by clouds that are thick enough to produce a shadow.

(100 percent sunshine = no cloud cover and a sharp, distinct shadow; 0 percent sunshine = no shadows.)

Note: Reprinted from *Occupational Safety and Health Guidance Manual for Hazardous Waste Site Activities* (1985).

Table A-9
Monitoring and Sampling Requirements

Site	Activity	Monitor						Sample		
		VOC	Dust	Oxygen and % LEL	Perimeter (Dust)	Noise	Heat Stress	VOC	Metals	Explosives
SWMU 12/14	1. Excavate, screen, and load soils for Composting	y	Y	O	O	Y	O	N	Y	Y
Start-up and Operations of Bioremediation Facility	1. Offload and grind amendments.	N	Y	N	N	Y	O	N	N	N
	2. Load amendment blend in windrows.	N	Y	N	N	Y	O	N	N	N
	3. Offload contaminated soil into windrows.	Y	Y	Y	N	Y	O	N	N	N
	4. Turn and mix windrows.	Y	Y	Y[2]	N	Y	O	Y	Y	y

Y = Yes, O = Optional at discretion of SSHO, N = Not required

Notes:

1 = In addition to LEL and O_2, conduct periodic monitoring for other organics, CO_2, CO, Hydrogen Sulfide, ammonia, nitrogen dioxide and nitrous fumes, and formaldehyde levels inside of the Composting Facility using direct reading instrumentation and colorimetric indicator tubes as described in Section 7. Occupational exposure limits are presented in Table A-2.

2 = Bioaerosol sampling campaign parameters are defined and specified in Section 7. Suggested occupational exposure limits are presented in Table A-2.

FIGURES

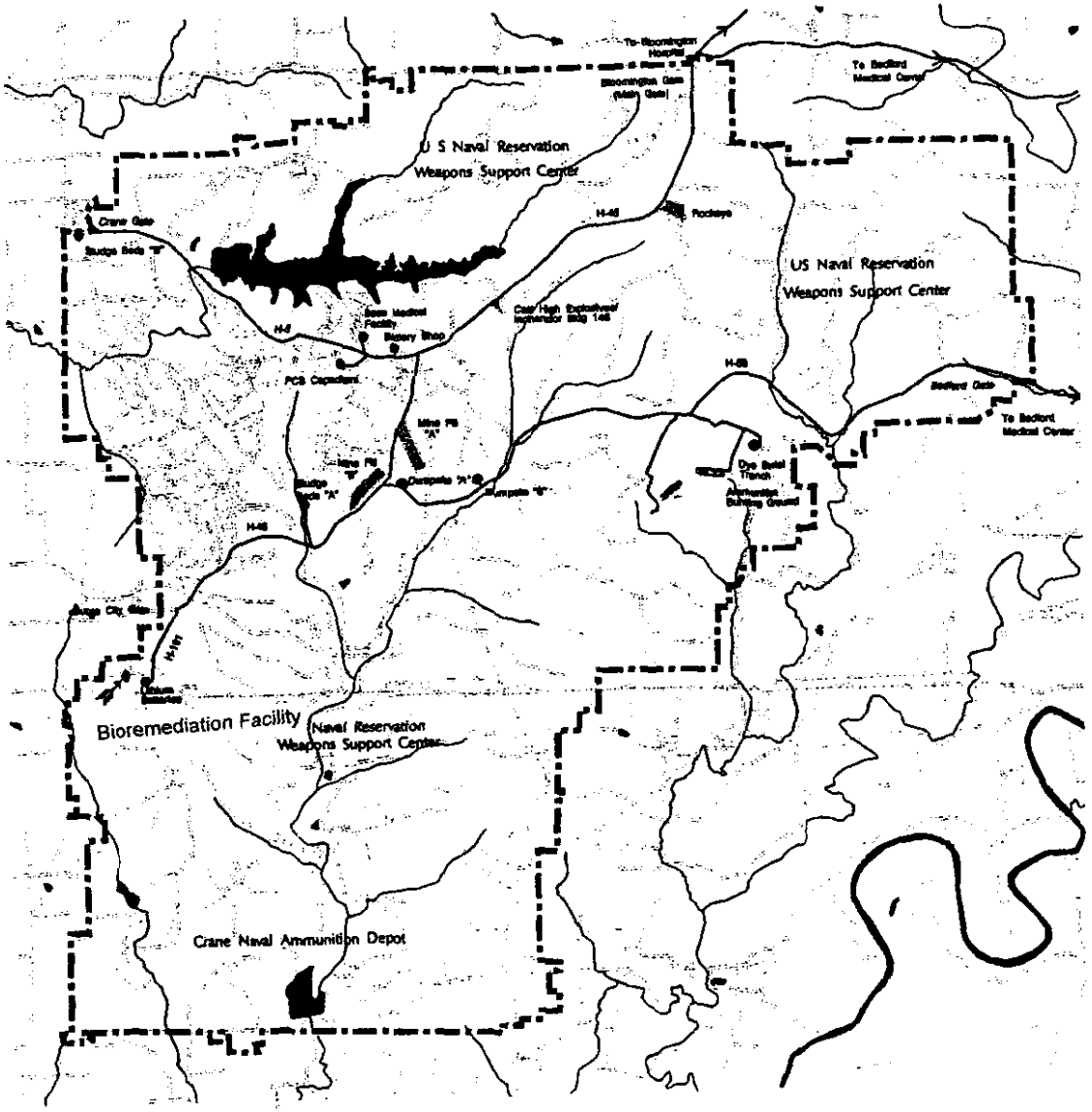

Figure A-1

Directions to the Nearest Medical Facility

Legend

— Primary Route

- - - Naval Reservation Boundary

Directions to NSWC Medical Department on site:

The NSWC Medical Department manages and coordinates the on-site ambulance service. Located in Building 12 off of H-2 just north of H-5.

Directions to Bedford Medical Center:

From the Bedford Gate, head east on 158 to the city of Bedford. 158 turns into 16th Street. Gate open M-F only 6-8 AM and 3-6 PM

From Bedford Gate, head east on I58 to the city of Bedford. I58 turns into 16th street.

Directions to Bloomington Hospital:

Exit Base on H5-45 through the Bloomington Gate, follow Highway 45 North to Bloomington. At Highway 45 and Highway 37, continue going straight over the bypass (Bloomfield Road), follow Bloomfield road north which turns into 2nd Street. Follow 2nd Street and hospital is on your right.

1 inch = 1.5 miles

MORRISON KNUDSEN CORPORATION
Engineering, Construction
& Environmental Group

Figure A-2 Safety Meeting Report

Type of Meeting:_____.

Topic:_____.

The following personnel were present for meeting conducted at _____ (time) on _____ (date) at _____ (location).

NAME	SIGNATURE	ORGANIZATION

_____

Printed Name of Meeting Chairman Signature Date

Figure A-3 Pre-Entry Briefing Signature Sheet

Work area(s) to be entered _____

The following personnel have had a pre-site entry briefing conducted at _____ __ (time) on _____ (date) at _____ (location), and are familiar with this plan's provisions, and are willing to meet the requirements of this plan.

NAME	SIGNATURE	ORGANIZATION

_____

Printed Name of Supervisor Signature Date

Figure A-4 SSHO Daily Logbook Report

Page ___ of ___

Date _____ Report Number _____

Location(s) Work Activity and # Employees: _____

Weather: Wind speed _____ Wind direction _____
Temp. & Pressure _____ Precipitation _____
Amount sun _____

Monitoring conducted:

Location	Sampled for	Instrument used	Results	Sampled By/Time

Levels of Protection: _____

Problems or Unusual Situations: _____

Correspondence: _____

Other Comments: _____

MK SSHO Printed Name: _____ Signature _____ Date _____

Figure A-5 SSHP Weekly Inspection Checklist

Surveillance No. _____

SURVEILLANCE NO:	ACTIVITY:		PROJECT NO:
DATE:	LOCATION:		SURVEYED ORGANIZATION: PRIME:
	SITE/AREA CONTACT:	RESPONSIBLE MANAGER:	SUBTIER:

ITEM NO.	DESCRIPTION OF SURVEYED ITEMS	N/A SAT UNSAT	DESCRIPTION OF DISCREPANCY/ NON-COMPLIANCE	ACT OR COND	CAT	REQUIRED ABATEMENT DATE	CORRECTIVE ACTION TAKEN AND DATE ABATEMENT COMPLETED
	Section 1						
1	Scope of work and site contaminants accurately described?						
	Section 2						
2	Activity hazard analysis prepared for each major work phase? (EM 385-1-1, Section 01.A.09)						
3	All hazards including chemical/biological and physical adequately described?						
	Section 3						
4	Roles and responsibilities described and personnel roster up-to-date?						
	Section 4						
5	All site personnel completed required training?						
6	Training documented and records on site?						
	Section 5						
7	All site personnel completed initial medial qualification?						
	Section 6						
8	PPE available and in good condition?						
9	PPE work per SSHP and/or SSHO direction?						
10	Personnel trained in proper use, limitations, and inspection of PPE?						
11	PPE inspected per SSHP?						
12	PPE donning/doffing procedures in place?						

FIGURE 5. SSHP Weekly Inspection Checklist (continued)

Surveillance No. _____

ITEM NO.	DESCRIPTION OF SURVEYED ITEMS	N/A SAT UNSAT	DESCRIPTION OF DISCREPANCY/ NON-COMPLIANCE	ACT OR COND	CAT	REQUIRED ABATEMENT DATE	CORRECTIVE ACTION TAKEN AND DATE ABATEMENT COMPLETED
13	Written SOP available describing respirator selection and use?						
	Section 7						
14	Air monitoring conducted per SSHP?						
15	Monitoring equipment properly maintained and calibrated?						
16	Employees notified of monitoring results?						
17	Chain of custody prepared and maintained for all samples?						
	Section 4 and 8						
18	Weekly safety meeting held?						
19	Pre entry briefs held? and signature sheet completed?						
20	Haz Com programs in place?						
21	Competent person evaluates excavation?						
22	Personnel responsible for work maintains control of area and general safety requirements are being followed ? Note: fire extinguishers, eyewash, first aid kits and spill response equipment.						
	Section 9						
23	Soil Excavation Maps prepared and updated?						
24	Maps posted near work area and stored in field master SSHP?						
25	Traffic patterns established and rules observed?						
	Section 10						
26	Inspections performed of all personnel, clothing and equipment leaving exclusion zone?						
27	All materials decontaminated prior to existing contamination reduction zone?						
28	Decon stations properly established?						
29	Proper personal hygiene practices observed?						
30	Decon solutions collected and properly disposed of?						
	Section 11						

FIGURE 5. SSHP Weekly Inspection Checklist (continued)

Surveillance No. _____

ITEM NO.	DESCRIPTION OF SURVEYED ITEMS	N/A SAT UNSAT	DESCRIPTION OF DISCREPANCY/ NON-COMPLIANCE	ACT OR COND	CAT	REQUIRED ABATEMENT DATE	CORRECTIVE ACTION TAKEN AND DATE ABATEMENT COMPLETED
31	At least two employees on each shift trained in CPR and first aid and BLOOD BORNE pathogens?						
32	First aid kit at each work site?						
33	All first aid and medical cases promptly reported to MK SSHO?						
	Section 12						
34	All personnel trained on Emergency Response Plan and Contingency Procedures?						
35	Emergency pre-planning addressed in safety meeting?						
36	List of emergency services/contact is up to date and posted?						
37	Assembly points identified and communicated to employees?						
38	Evacuation routes established and communicated to employees?						
39	Communication methods are adequate						
40	All drills, exercises, and emergencies critiqued?						
41	All emergencies promptly reported to MK SSHO?						
	Section 13						
42	MK SSHO maintains project log book?						
43	Daily reports completed by MK SSHO?						
44	Daily inspections completed by MK SSHO?						
45	Weekly reports prepared by MK SSHO?						
46	Records of all injuries and illnesses maintained by MK SSHO?						
	Section 14						
47	Work plans/Operational Plans available and up to date?						
48	SOPS developed as needed?						
48A	Equipment operational checklists developed as needed?						
48B	Maintenance SOPs include safety and health aspects?						
	Section 15						

FIGURE 5. SSHP Weekly Inspection Checklist (continued) **Surveillance No. _____**

ITEM NO.	DESCRIPTION OF SURVEYED ITEMS	N/A SAT UNSAT	DESCRIPTION OF DISCREPANCY/ NON-COMPLIANCE	ACT OR COND	CAT	REQUIRED ABATEMENT DATE	CORRECTIVE ACTION TAKEN AND DATE ABATEMENT COMPLETED
49	Two-way radios available per SSHP?						
50	Cellular telephone available as needed?						
51	Emergency alarms available and personnel trained on what actions to take?						
52	Drills and exercises conducted to test communication methods?						
	Section 16						
53	Spill response measures reviewed with personnel?						
54	Suitable quantities of spill supplies available?						
55	Spills promptly reported to MK SSHO?						
56	Operations arranged to minimize spills?						
	Section 17						
57	Confined space requirements of 385-1-1, Section 06.0.01 followed? Personnel trained?						

Inspection Performed By: _____ Date: _____

Abatement Accepted By: _____ Date: _____

ATTACHMENT A

ACTIVITY HAZARD ANALYSIS

ACTIVITY HAZARD ANALYSIS (AHA)

Activity: General Soil Excavation Activity and Transport for Composting, SWMU 12/14		Analyzed By/Date: Frank J. Petrik 4/7/97	Reviewed By/Date:
1.0 Principal Steps	**Potential Hazards**	**Recommended Controls**	
1.1 Walk area down, establish work zone, haul routes, get permit and begin soil excavation. 1.2 Screen Soil, load and haul activity . Note: see worksheet on Screener.	1.1a. Contact with underground utilities or process piping. 1.1b. Contact with unexploded ordnance. 1.1c. Struck by and struck against physical objects during clearing and grubbing. 1.1d. Biological; weeds, snakes, spiders; other plant life. 1.1e. Contact by inhalation, direct contact or ingestion of chemical contaminants. 1.2a. Struck by and struck against physical objects during load and haul. 1.2b. Spread of contaminated materials.	1.1a. Excavation and Trenching Permit completed and in place at work site. Utility locates coordinated by MK onsite PM through the NSWC PWD. MK PE must assess undermining of structural supports. 1.1b. MK PM to reverify with NSWC the necessity for UXO Survey. 1.1c. MK SSHO to lead Plan of Day meeting reviewing clearing and grubbing safety based on EM-385-1 Section 31. 1.1d. MK SSHO to discuss specific biological hazards awareness with NSWC Medical and/or Safety/IH department and plan for and communicate findings at POD and/or Pre Entry Briefs. 1.1e. Level C PPE specified. Personal air sampling required. Dust control by wetting required. Personal decontamination required. 1.2a. Preplan work layout (Soil Excavation Map completed and posted). Access and Haul roads to be assessed against EM 385-1-1, Section 21.I by MK onsite PE. Backup alarms on all motorized heavy equipment and headlights on (haul truck only). **Emergency procedures and communications with haul trucks must be established.** 1.2b. Vehicle decontamination station and covered loads during transport. MK SSHO to assess decontamination and PPE requirements from time load is covered, during transport and off loading activities. Criteria reviewed at Pre-Entry Briefs.	
1.3 Equipment to be Used	Inspection Requirements	Training Requirements	
1.4 Heavy equipment for excavation and hauling. Screener and hand tools.	Daily, prior to use per manufacturer's recommendation.	OSHA 1910.120 40-Hour Training, 3 day OJT, 8 hours Supervisory. 8 hour Refresher, Site Safety and Health Plan (Project Kickoff), POD, Pre and Post Entry Briefs, OSHA Hazard Communication, Respirator.	

ACTIVITY HAZARD ANALYSIS (AHA)

Activity: SWMU "temporary" Decontamination Facility Operations, Personnel and Equipment.		Analyzed By/Date: Frank J. Petrik 4/7/97	Reviewed By/Date:
2.0. Principal Steps	Potential Hazards	Recommended Controls	
2.1. Receive and place material at facility.	2.1a. Struck by and struck against. Material handling concerns.	2.1a. SWMU temporary Decontamination Facility to provide isolation and controlled access. Equipment must be secure or blocked. MK SSHO and Project Supervisor(s) to review material handling procedures to insure good practices and approved equipment is used which conforms to OSHA & EM-381 Section 28.I requirements.	
2.2. Decontaminate Equipment using high pressure wash or hand scrubbing and/or automatic wash on vehicle tires and undercarriage.	2.2a. Contact with contaminated material and cross contamination; inhalation of airborne aerosols; contact with high pressure wash stream; unexpected movement of material to be decontaminated.	2.2a. Level C PPE with face shield, modify per MK SSHO review. Secure items to be decontaminated. Visual inspect integrity of Facility's containment liners and containers used for waste waters. Personnel decontamination required including end of work shift showers at main decontamination facility.	
2.3. Rock/Debris washing	2.3a. Same as 2.1a and 2.2a.	2.3a. Same as 2.1a and 2.2a.	
2.4 Equipment to be Used	Inspection Requirements	Training Requirements	
2.5. High pressure water wash with/without soap solution; other decontamination solutions; scrub brushes; material handling equipment and securing equipment.	Before use per manufacturers recommendation.	OSHA 1910.120 40-Hour Training, 3 day OJT, 8 hours Supervisory. 8 hour Refresher, Site Safety and Health Plan (Project Kickoff), POD, Pre and Post Entry Briefs, OSHA Hazard Communication, and Respirator.	

ACTIVITY HAZARD ANALYSIS (AHA)

Activity: Temporary storage and shipment of contaminated soils, liquids or debris.		Analyzed By/Date: Frank J. Petrik 4/7/97	Reviewed By/Date:
3.0. Principal Steps	Potential Hazards	Recommended Controls	
3.1. Field screen to determine contamination, store in designated location.	3.1a. Contact with contaminated material during screening, loss of containment of contaminated material.	3.1a. Modified Level D PPE during initial screening of soil and liquids, upgrade per MK SSHO direction. Stockpile soil on polyethylene sheeting, surround with haybales and cover. Secure area. If roll-off containers used, inspect container for integrity and containment, secure area and cover. Liquid containers should be secure with secondary containment.	
3.2. Shipment of contaminated soils, liquids, or debris offsite for disposal.	3.2a. Contact with contaminated material during loading; loss of containment of contaminated material; and unsecured loads.	3.2a. Level D PPE during material handling, upgrade per MK SSHO direction. Inspect shipping containers for integrity and containment, comply with all DOT/EPA shipping requirements, especially labeling and placarding. Insure provisions for decontamination of any loading equipment.	
3.3 Equipment to be Used	Inspection Requirements	Training Requirements	
3.4. Polyethylene sheeting, hay bales, material handling equipment, liquid containers or roll-off containers.	Before use per manufacturers recommendation.	OSHA 1910.120 40-Hour Training, 3 day OJT, 8 hours Supervisory. 8 hour Refresher, Site Safety and Health Plan (Project Kickoff), POD, Pre and Post Entry Briefs, OSHA Hazard Communication, and DOT 181 certification for person supervising the preparation of contaminated materials for offsite shipment.	

ACTIVITY HAZARD ANALYSIS

SOILS BIOREMEDIATION FACILITY

ACTIVITY HAZARD ANALYSIS (AHA)

Activity: *Screener Operation*		Analyzed By/Date: Frank J. Petrik 4/7/97	Reviewed By/Date:
1.0 Principal Steps	**Potential Hazards**	**Recommended Controls**	
1.1 Walk area down, establish work zone and material flow. Position and secure Screener at worksite.	1.1a. Struck by and struck against physical objects during initial job set-up.	1.1a. Preplan work layout (Soil Excavation Map completed and posted). Backup alarms on all motorized heavy equipment. Personnel shall maintain safe distance from equipment. High visibility vests for workers.	
1.2 Excavated material loaded into Screener and screen. Screened material either stockpiled or loaded directly into haul truck.	1.2a. Struck by and struck against physical objects during feed operations. Caught in and Caught by hazards.	1.2a. Preplan work layout (Soil Excavation Map completed and posted). Screener leveled, locked and outriggers or stabilizers in place. All machine guards in place and verified prior to operation. Backup alarms on all motorized heavy equipment. High visibility vests for workers.	
	1.2b. Airborne contaminated dust from Screener operation.	1.2b. Engineering Controls in place on Screener to control dust. Dust controls by wetting oF soil. Level C PPE.	
	1.2c. Noise and vibration.	1.2c. *Sound Level Surveys to be conducted by MK SSHO.*	
	1.2d. Fire/Explosion	1.2d. Diesel fueling operations conducted per manufacturers recommendation including daily inspection oF equipment.	
1.3 Equipment to be Used	**Inspection Requirements**	**Training Requirements**	
1.4 Screener, Heavy equipment for loading and hauling.	Daily, prior to use per manufacturer's recommendation in accordance with Operational Plan.	OSHA 1910.120 40-Hour Training, 3 day OJT, 8 hours Supervisory. 8 hour Refresher, Site Safety and Health Plan (Project Kickoff), POD, Pre and Post Entry Briefs, OSHA Hazard Communication, Respirator.	

ACTIVITY HAZARD ANALYSIS (AHA)

Activity: Grinder/ Mixer Operation		Analyzed By/Date: Frank J. Petrik 4/7/97	Reviewed By/Date:
2.0 Principal Steps	**Potential Hazards**	**Recommended Controls**	
2.1 Position and secure *Grinder/Mixer at worksite.* Load amendments and discharge material into storage bins from side discharge conveyor or directly into windrows for development. Note: Grinder/Mixer will be PTO driven from tractor. Amendments will be loaded using center pivot loader with claw attachment.	2.1a. Struck by and struck against *physical objects during* operation, caught in and caught by hazards. 2.1b. Airborne nuisance biological aerosols; snakes, insects and rodents. 2.1c. Noise and Vibration 2.1d. Fire/Explosion	2.1a. Preplan work layout. Grinder/Mixer leveled, locked and outriggers *or stabilizers in place if operated from stationary position.* All machine guards in place and verified prior to operation. Backup alarms on all motorized heavy equipment. High visibility vests for workers. 2.1b. Inspect amendment stockpiles. Modified Level D PPE with Dust Mask. 2.1c. Sound Level Surveys conducted by MK SSHO. 2.1d. Diesel Fueling operations conducted per manufacturers recommendation including daily inspection of equipment.	
2.2 Equipment to be Used	**Inspection Requirements**	**Training Requirements**	
2.3 Grinder/Mixer, Farm Tractor, Loader	Daily, prior to use per manufacturer's recommendation.	OSHA 1910.120 40-Hour Training, 3 day OJT, 8 hours Supervisory. 8 hour Refresher, Site Safety and Health Plan (Project Kickoff), POD, Pre and Post Entry Briefs, OSHA Hazard Communication, Respirator and Operator Training.	

ACTIVITY HAZARD ANALYSIS (AHA)			
Activity: Offload contaminated soils into windrows using end discharge Dump Truck and Self-Powered Swing Discharge Conveyor.		Analyzed By/Date: Frank J. Petrik 4/7/97	Reviewed By/Date:
3.0 Principal Steps	**Potential Hazards**	**Recommended Controls**	
3.1 Position and secure discharge conveyor to Dump Truck and offload Dump Truck into conveyor for windrow development.	3.1a. Struck by and struck against physical objects during operation; caught in and caught by hazards.	3.1a. Preplan work layout. Insure conveyor is locked into position on Dump Truck. All machine guards in place and verified prior to operation. Backup alarms on all motorized heavy equipment. High visibility vests for workers.	
	3.1b. Airborne aerosols; chemical and biological.	3.1b. Level C PPE. Air monitoring and sampling campaign per Section 7 of SSHP.	
	3.1c. Noise and vibration.	3.1c. Sound Level Surveys conducted by MK SSHO.	
	3.1d. Fire/Explosion	3.1d. Diesel Fueling operations conducted per manufacturers recommendation including daily inspection of equipment.	
3.2 Equipment to be Used	**Inspection Requirements**	**Training Requirements**	
3.3 Dump Truck and Conveyor.	Daily, prior to use per manufacturer's recommendation.	OSHA 1910.120 40-Hour Training, 3 day OJT, 8 hours Supervisory. 8 hour Refresher, Site Safety and Health Plan (Project Kickoff), POD, Pre and Post Entry Briefs, OSHA Hazard Communication, Respirator, Operator Training.	

ACTIVITY HAZARD ANALYSIS (AHA)

Activity: Operation of Windrow Machine, turn and mix Windrows		Analyzed By/Date: Frank J. Petrik 4/7/97	Reviewed By/Date:
4.0 Principal Steps	**Potential Hazards**	**Recommended Controls**	
4.1 Diesel powered windrow/composter turning machine is driven into composting building to mix and reform the windrow piles.	4.1a. Struck by and struck against physical objects during operation; caught in and caught by hazards.	4.1a. Preplan work layout. All machine guards in place and verified *prior to operation*. Cab doors closed and cab ventilation system operating. High visibility vests for personnel in building when machine is operating. Standby personnel inside oF structure need to maintain safe distance away from mixing flails.	
	4.1b. Airborne aerosols; chemical and biological.	4.1b. Level C PPE. Air monitoring and sampling campaign per Section 7 oF SSHP.	
	4.1c. Noise and vibration.	4.1c. Sound Level Surveys conducted by MK SSHO.	
	4.1d. Fire/Explosion	4.1d. Diesel Fueling operations conducted per manufacturers recommendation including daily inspection oF equipment.	
4.2 Equipment to be Used	**Inspection Requirements**	**Training Requirements**	
4.3 Windrow Machine	Daily, prior to use per manufacturer's recommendation.	OSHA 1910.120 40-Hour Training, 3 day OJT, 8 hours Supervisory. 8 hour Refresher, Site Safety and Health Plan (Project Kickoff), POD, Pre and Post Entry Briefs, OSHA Hazard Communication, Respirator, Operator Training.	

ACTIVITY HAZARD ANALYSIS (AHA)

Activity: Monitoring windrow parameters and field screening/confirmation sampling.		Analyzed By/Date: Frank J. Petrik 4/7/97	Reviewed By/Date:
5.0 Principal Steps	**Potential Hazards**	**Recommended Controls**	
5.1 Worker will monitor process parameters and obtain samples according to frequency established in Pilot Scale Operational Plan.	5.1a. Struck by and struck against Windrow machine if worker is monitoring when machine is operating.	5.1a. Preplan work sequence, maintain clear area away from machine. Wear high visibility vest.	
	5.1b. Airborne aerosols and vapors/gases, both biological and chemical. Direct contact with chemicals contained in sampling kits.	5.1b. Modified Level D with Dust Mask, upgrade or downgrade based on results of air monitoring and sampling campaign. Use Level C PPE if in building at same time the Windrow machine is operating. Review MSDS and suppliers instructions for sampling kits.	
5.2 Equipment to be Used	**Inspection Requirements**	**Training Requirements**	
5.3 Instrumentation and sampling kits.	Daily, prior to use per manufacturer's recommendation.	OSHA 1910.120 40-Hour Training, 3 day OJT, 8 hours Supervisory. 8 hour Refresher, Site Safety and Health Plan (Project Kickoff), POD, Pre and Post Entry Briefs, OSHA Hazard Communication, Respirator.	

ACTIVITY HAZARD ANALYSIS (AHA)

Activity: Load and Transport Treated Soils		Analyzed By/Date: Frank J. Petrik 4/7/97	Reviewed By/Date:
6.0 Principal Steps	**Potential Hazards**	**Recommended Controls**	
6.1. Loader will load treated soil into Dump Truck for transport to onsite landfill for use as daily cover.	6.1a. Struck by and struck against physical objects during operation.	6.1a. Preplan work layout). Haul roads to be assessed against EM 385-1-1, Section 21.I by MK onsite PE. Backup alarms on all motorized heavy equipment and headlights on (haul truck only). Emergency procedures and communications with haul trucks must be established. High visibility vests for personnel working in near vicinity oF heavy equipment.	
	6.1.b Airborne nuisance dust.	6.1b. Dust Controls required to include covered loads during transport. Level D PPE expected, upgrade if necessary.	
	6.1.c Noise and vibration.	6.1c. Sound Level Surveys conducted by MK SSHO.	
	6.1.d Fire/Explosion	6.1d. Diesel Fueling operations conducted per manufacturers recommendation including daily inspection oF equipment.	
6.2 Equipment to be Used	**Inspection Requirements**	**Training Requirements**	
6.3 Loader and Dump Truck.	Daily, prior to use per manufacturer's recommendation.	OSHA 1910.120 40-Hour Training, 3 day OJT, 8 hours Supervisory. 8 hour Refresher, Site Safety and Health Plan (Project Kickoff), POD, Pre and Post Entry Briefs, OSHA Hazard Communication, Respirator.	

ACTIVITY HAZARD ANALYSIS (AHA)

Activity: Decontamination Facility Operations, Personnel and Equipment.	Analyzed By/Date: Frank J. Petrik 4/7/97	Reviewed By/Date:

7.0 Principal Steps	Potential Hazards	Recommended Controls
7.1 Receive and place material at facility.	7.1a. Struck by and struck against. Material handling concerns.	7.1a. Site Decontamination Facility to provide isolation and controlled access. MK SSHO and Project Supervisor(s) to review material handling procedures to insure good practices and approved equipment is used which conforms to OSHA and EM-381 Section 28.I requirements.
7.2 Decontaminate Equipment using high pressure wash or hand scrubbing and/or automatic wash on vehicle tires and undercarriage.	7.2a. Contact with contaminated material and cross contamination; inhalation oF airborne aerosols; contact with high pressure wash stream; unexpected movement oF material to be decontaminated.	7.2a. Level C PPE with face shield, modify per MK SSHO review. Secure items to be decontaminated. Visual inspect integrity oF Facility's containment liners and containers used for waste waters. Clean side area established for worker's street clothes and approved respirator storage after cleaning and sanitizing.
	7.2b. Physical hazards associated with process equipment disassembly and dismantlement.	7.2b. Plan for decontamination to include PPE selection, energy control, material handling onsite, and waste management.

7.3 Equipment to be Used	Inspection Requirements	Training Requirements
7.4 High pressure wash with soap solution; other decontamination solutions; scrub brushes; material handling equipment and securing equipment. Personal showers; wash and change facilities.	Before use per manufacturers recommendation.	OSHA 1910.120 40-Hour Training, 3 day OJT, 8 hours Supervisory. 8 hour Refresher, Site Safety and Health Plan (Project Kickoff), POD, Pre and Post Entry Briefs, OSHA Hazard Communication, and Respirator.

ACTIVITY HAZARD ANALYSIS			
Activity:	Planned Maintenance during Operations Phase oF System.	Analyzed By/Date: Frank J. Petrik 4/7/97	Reviewed By/Date:
8.0. Principal Steps	Potential Hazards	Recommended Controls	
8.1. Equipment dependent, details will be determined.	8.1a Physical hazards, electrical and mechanical energy. Exposure to contaminants in process equipment.	8.1a Approved Pilot Scale Operational Plan in place. Energy Control must be emphasized in procedures. Spare parts must meet or exceed manufacturers recommendation and intended use environment. Preplan any decontamination that may be necessary, either personal and/or equipment. Preplan waste handling and disposal.	
8.2. Equipment to be Used	Inspection Requirements	Training Requirements	
8.3. Per equipment vendor requirements.	Per Pilot Scale Operational Plan. Safety Walkdown on daily basis, emergency procedures established and training conducted. Emergency systems tested on monthly/quarterly basis.	OSHA 1910.120 40-Hour Training, 3 day OJT, 8 hours Supervisory. 8 hour Refresher, Site Safety and Health Plan (Project Kickoff), POD, and OSHA Hazard Communication. May be modified if all clean new construction work.	

DRAFT

HAZARD ANALYSIS REPORT

FOR

SOILS BIOREMEDIATION PROCESS EQUIPMENT

MAY 16, 1997

Prepared For

Naval Surface Warfare Center
Crane Division
Crane, Indiana

Prepared By

COMARCO SYSTEMS
R.R. #6 BOX 28
BLOOMFIELD, IN. 47424

1.0 INTRODUCTION

1.1 Purpose. The purpose of this draft Hazard Analysis Report is to provide Naval Surface Warfare Center, Crane Division with an evaluation of the explosive safety hazards associated with operating equipments planned for use in a Soils Bioremediation Facility.

1.2 Approach. The soils bioremediation process equipment listed herein were evaluated by COMARCO's Certified Safety Professional. Hazards were identified based on equipment specifications, work task descriptions, and expected exposures to explosive compounds. Recommendations for consideration by management were developed. This analysis relied on information furnished by the Government.

1.3 Overview of Bioremediation Operations. Naval Surface Warfare Center, Crane Division, Code 095, is finalizing its plans for management of a composting operation for treatment of contaminated soil. The soil is contaminated with explosive compounds which are Class 1 hazardous material. Bioremediation operations include the use of rubber-tired construction-type materials handling equipment to excavate contaminated soil sites and prepare the soil for transport. The contaminated soil will then be transported to a Soils Bioremediation Facility on the Center. The soil will be windrow mixed with compost ingredients at the Facility and repeatedly "turned" with special composting equipment. Upon completion of the bioremediation phase, the soil will be transported for disposal. Samples from compost piles are planned for daily tested in a microwave oven to determine the percentage of moisture content.

2.0 HAZARD ANALYSIS

NOTE: Occupational safety, health, and environmental hazard concerns, as a result of the contaminated soil processing, have been addressed in the Soils Bioremediation Facility Pilot Scale Operational Plan.

2.1 Equipment List. The following equipment planned for use in the bioremediation processing of explosive compound contaminated soils have been selected for analysis. This equipment is further defined within Section 10 of the Pilot Scale Operational Plan for the Soils Bioremediation Facility:

2.1.1 Portable Soil Screener. This piece of equipment will be used at an excavation site for processing contaminated soil. The screening process removes all material over 1-1/2 inches in diameter. A high speed trommel (drum) within the screener mechanically breaks apart and mixes the screened soil prior to it being fed into a truck or pile by a self contained conveyor. The equipment contains its own diesel engine power source and has a 50 ton per hour work capacity.

2.1.2 Semi-Tractor Truck and Live Bottom Trailer. This equipment will be used to haul screened contaminated soil from the excavation site to the Soils Bioremediation Facility. The 48 cubic yard capacity live bottom trailer contains a bulk materials transfer system which allows for a trailer controlled discharge of its material at the Soils Bioremediation Facility. The tractor trailer will also transport treated soil for final disposal.

2.1.3 Backhoe/Loader. This equipment will be used for excavating contaminated soil, loading the portable soil screener, and/or loading the live bottom trailer at the excavation site. This equipment is a construction standard 3-4 cubic yard bucket, rubber tired loader design.

2.1.4 Steer Skid Loader. This equipment will be used for moving contaminated soil at the excavation site and handling composted soil at the Soils Bioremediation Facility. This a construction standard 1/2 to 1/3 cubic yard rubber tired excavator.

2.1.5 Center Pivot Wheel Loader. This equipment will be used to adjust the shape of composted windrows at the Soils Bioremediation Facility. This equipment is a construction standard 6-7 cubic yard bucket center pivot rubber tired loader with a claw attachment. The loader will also be used to handle compost material at the Facility.

2.1.6 Hopper/Conveyor System. This equipment will be used to catch contaminated soil from the live bottom trailer and convey it to windrow piles during original windrow development. The 150 ton an hour capacity rubber tired conveyor will be towed by the live bottom trailer but contains its own power source.

2.1.7 Windrow Composter. This equipment will be used to form piles of compost material, mix compost material and contaminated soil into a formed pile, and repeatedly "turn" the compost windrows over a period of time. This equipment is especially manufactured for the self-propelled continuous pickup, mixing, and forming of compost materials. The rubber tired composter has its own power source and incorporates high speed internal agitation of material as it reshapes a compost pile.

2.1.8 Other Process Equipment. Other construction type equipment, such as pumps, tankers, etc., may come into contact with or be exposed to explosive contaminated soil, dust, or water during the soils bioremediation processing. Hazard analysis of these items have not been specifically addressed herein.

2.1.9 Microwave Oven. This equipment will be used to dry small sample quantities of composted soil as part of a process for determining the percentage of moisture content in the composted material. A standard consumer designed microwave will be located in a laboratory trailer at the Soils Bioremediation Facility.

2.2 Hazard Identification. The hazards addressed in this analysis are directly related to the sensitivity and ignitible characteristics of Hazardous Material Class 1 explosive compounds present in the soil at excavation sites. Test results indicate concentrations as much as 15,300 parts-per-million of RDX within these soils. Lower amounts of TNT and HMX compounds have also been measured. Accidental initiation of this material is potentially possible if the amount and sensitivity level coincides with an adequate energy source. Two examples of when an energy source initiation could occur during the soils processing are:

1) If explosive residue is tightly pinched due to metal to metal close tolerances, initiation of the explosive material may occur. Initiation may result in localizing burning or an explosion due to the friction generated energy.

2) The heat energy from the hot surface of an equipment's exhaust manifold or catalytic converter could result in the burning or ignition of accumulated explosive dust.

2.3 Hazard Evaluation and Risk Assessment. A comprehensive evaluation of the potentials for initiating explosive compounds during the bioremediation processing of contaminated soils has been documented by Hercules Incorporated in a 1992 Hazard Review of a KW Windrow Composter. This Hazard Review was completed to identify safety critical areas in the design and operation of the composter. This Review was extensively referred to during COMARCO's assessment of the risks during analysis of the soils bioremediation process equipment. The risk assessment matrices (Attachment A) were adopted by COMARCO from MIL-STD-882 to provide a guide for quantifying equipment hazard probability and severity factors.

2.3.1 Microwave Oven.

Hazard Risk Index = II D. Undesirable (management decision required)

Discussion-Further evaluation and review of this procedure by the Government is recommended. COMARCO's assessment was based on the known problems of placing materials into microwave ovens. The presence of metal pieces in the compost sample could create hot spots which in turn may cause explosive initiation during the final drying phase. The presence of metal could cause arcing within the oven. The possibility of chemical out gassing during the drying process is unresolved. The accumulation of flammable gases or vapors may be hazardous to oven integrity and laboratory safety.

2.3.2 Portable Soil Screener and Composter.

Hazard Risk Index = III C. Undesirable (management decision required)

Discussion-The potential hazards of these two units are summarized in the Hazard Review in Attachment A. The design characteristics of each machine offer multiple opportunities for explosives accumulation and tight tolerances for energy source development. The high speed operation of the internal components increases the probability that energy sources will be present. The total operation time of each machine is extensive during soils processing, which further increases the probability of explosive incident. The wear on both machines will tend to be higher because of the complex mechanical design and operational modes.

2.3.3 Live Bottom Trailer and Hopper/Conveyor System.

Hazard Risk Index = III D. Acceptable with review by management.

Discussion-The design and operating time of these units reduce the number of occasions for energy development which in turn reduces the probability of minor injury and equipment damage.

2.3.4 All other equipment.

Hazard Risk Index = III E. Acceptable with review by management.

Discussion-The occasion for energy source development is greatly reduced in the remainder of the equipment which comes in contact with explosive contaminated soil. It is also expected that accumulation of explosive material will be less.

2.4 Hazard Summary. In addition to the non-explosive occupational hazard communication requirements for employees, workers involved in soils processing must be advised of the potential dangers of minor burning and explosions. Respect for the ignitible characteristics of explosive compounds is critical. This concern must also extend to the explosive hazards which may be present during equipment maintenance and repair. Along with the recommendations in Section 3.0, it is suggested that the content of Attachment A be made a part of all management briefings and that related administrative controls be developed and included in the final Operational Plan and all equipment related operational procedures.

3.0 RECOMMENDATIONS

Note: All explosive hazard control recommendations are based on COMARCO's analysis of government furnished information which included the Hazard Review of the KW Windrow Composter by Hercules Incorporated. It is important that these explosive safety related recommendations be considered by the Government along with occupational safety, health, and environmental hazard controls.

* Design controls or establish administrative hazard controls for the protection of employees which assume the possibility that minor burning or explosion can occur in or around equipments during processing of explosives contaminated soils. Incorporate hazard briefing training regarding hazardous material content of soils.

* Design or modify screener to ensure that no large lumps of explosive (1 inch or above) or other material will be ingested into the screening machine.

* Re-evaluate all factors at the screener for optimum control of dusts and flying fragments. Consider the use of water sprays for control purposes.

* Establish an equipment decontamination program wherein personnel are sufficiently familiar with the equipment to thoroughly clean tight clearance locations. Institute certification procedures for the removal of accumulated materials from all equipment exposures.

* Establish procedures and training which ensure clean components and requires wet component work conditions during maintenance and repair. Ensure that dust control covers are secured after maintenance.

* Establish inspection controls to ensure that only rubber-tired materials handling equipment and vehicles are allowed in areas where explosive contamination may be present.

* Modify sample testing procedures which eliminates use of the microwave oven. Consider use of commercial Class A drying oven which is certified to vent gases, vapors, and pressures during drying of compost samples. Establish controls to ensure temperatures do not exceed the lowest ignition temperature of explosive chemical within the sample.

HAZARD SEVERITY CATEGORIES

CATEGORY	SEVERITY	CHARACTERISTICS
I	CATASTROPHIC	DEATH OR SYSTEM LOSS
II	CRITICAL	SEVERE INJURY, SEVERE OCCUPATIONAL ILLNESS OR MAJOR SYSTEM DAMAGE
III	MARGINAL	MINOR INJURY, MINOR OCCUPATIONAL ILLNESS OR MINOR SYTEM DAMAGE
IV	NEGLIGIBLE	LESS THAN MINOR INJURY, OCCUPATIONAL ILLNESS OR SYSTEM DAMAGE

REFERENCE MIL-STD-882C

HAZARD PROBABILITY CATEGORIES

DESCRIPTION*	LEVEL	SPECIFIC INDIVIDUAL ITEM	FLEET OR INVENTORY**
FREQUENT	A	LIKELY TO OCCUR FREQUENTLY	CONTINUOUSLY EXPERIENCED
PROBABLE	B	WILL OCCUR SEVERAL TIMES IN LIFE OF AN ITEM	WILL OCCUR FREQUENTLY
OCCASIONAL	C	LIKELY TO OCCUR SOMETIME IN LIFE OF AN ITEM	WILL OCCUR SEVERAL TIMES
REMOTE	D	UNLIKELY BUT POSSIBLE TO OCCUR IN LIFE OF AN ITEM	UNLIKELY BUT CAN REASONABLY BE EXPECTED TO OCCUR
IMPROBABLE	E	SO UNLIKELY, IT CAN BE ASSUMED OCCURENCE MAY NOT BE EXPERIENCED	UNLIKELY TO OCCUR, BUT POSSIBLE

* DEFINITIONS OF DESCRIPTIVE WORDS MAY HAVE TO BE MODIFIED BASED ON QUANTITY INVOLVED.
** THE SIZE OF THE FLEET OR INVENTORY SHOULD BE DEFINED.

REFERENCE MIL-STD-882C

HAZARD ASSESSMENT MATRIX

FREQUENCY OF OCCURRENCE	HAZARD CATEGORIES			
	I CATASTROPHIC	II CRITICAL	III MARGINAL	IV NEGLIGIBLE
(A) FREQUENT	1A	2A	3A	4A
(B) PROBABLE	1B	2B	3B	4B
(C) OCCASIONAL	1C	2C	3C	4C
(D) REMOTE	1D	2D	3D	4D
(E) IMPROBABLE	1E	2E	3E	4E

HAZARD RISK INDEX	SUGGESTED CRITERIA
1A, 1B, 1C, 2A, 2B, 3A	UNACCEPTABLE
1D, 2C, 2D, 3B, 3C	UNDESIREABLE (MANAGEMENT DECISION REQUIRED)
1E, 2E, 3D, 3E, 4A, 4B	ACCEPTABLE WITH REVIEW BY MANAGEMENT
4C, 4D, 4E	ACCEPTABLE WITHOUT REVIEW

REFERENCE : MIL-STD-882C

APPENDIX B

PHOTOGRAPHS

PHOTOGRAPHS

1. Photograph 1, SWMU 12/14, Mine Fill Aerial View
2. Photograph 2, Looking Sw Towards Bldg. 153
3. Photograph 3, Looking Down From Bldg.. 153 at Vehicle Turnaround
4. Photograph 4, Looking East Towards Bldg.. 153 (Vehicle Turnaround at Left)
5. Photograph 5, Looking North Towards Bldg.. 158 (Secondary Excavation Site)
6. Photograph 6, Looking South Towards Bldg.. 158 (Secondary Excavation Site)
7. Photograph 7, Knight Soil Screener - Model Pro-Screen 1605
8. Photograph 8, Knight Soil Screener - Model Pro-Screen 1605 (Rear right side view)
9. Photograph 9, Semi-tractor Truck and Live-Bottom Trailer
10. Photograph 10, Hopper/Soil Dump Conveyor System
11. Photograph 11, Backhoe/Loader - Caterpillar Model 416B
12. Photograph 12, Skid Steer Loader - John Deere Model 6675
13. Photograph 13, Amendment Grinder/Mixer - Supreme Model 700
14. Photograph 14, Amendment Grinder/Mixer Scale Operators Panel With Digital Display
15. Photograph 15, Farm Tractor With Loader Attachments - John Deere Model 7710
16. Photograph 16, Center-Pivot Wheel Loader - Caterpillar Model 966F

17. Photograph 17, Windrow Compost Turner - Scarab Model 20HYD450 (Rear View)

18 Photograph 18, Windrow Compost Turner - Scarab Model 20HYD450 (Front-Right Side View)

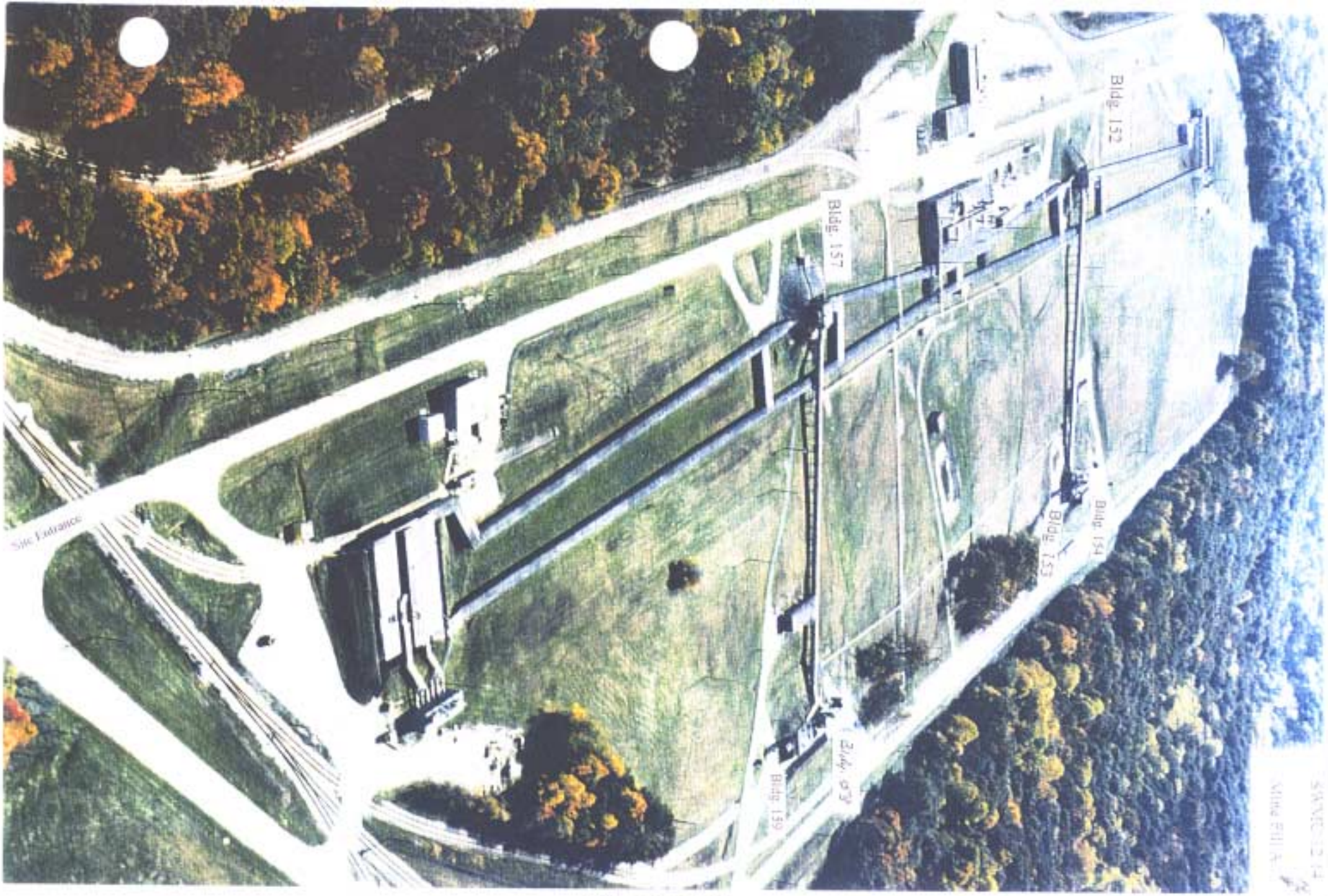

Photograph 1
SWMU 12/14, Mine Fill A Aerial View

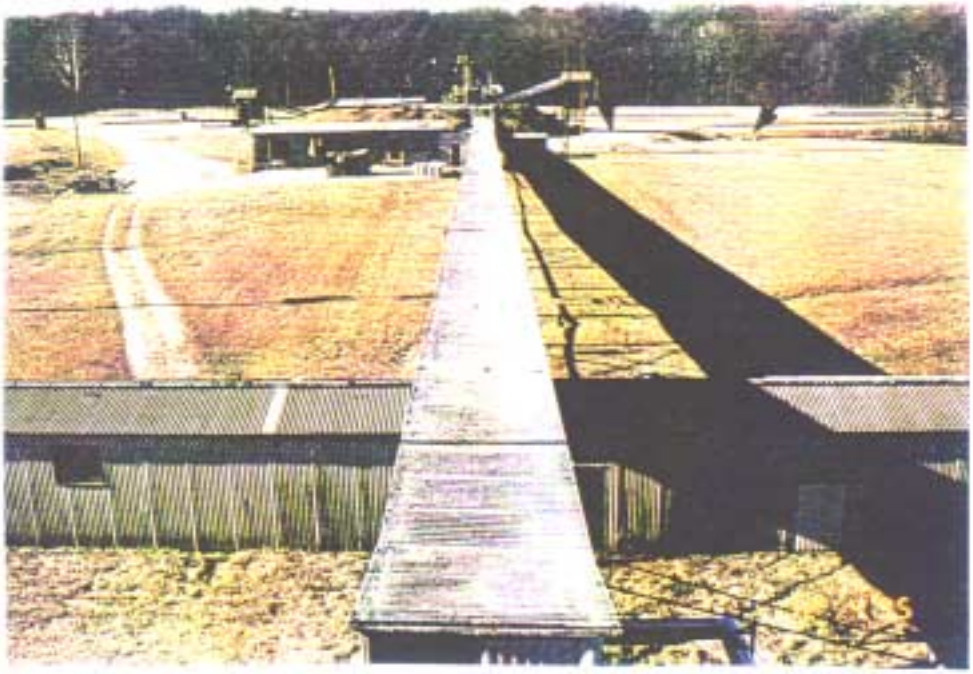

Photograph 2
Looking SW Toward Building 153

Photograph 3
Looking Down From Building 153 at Vehicle

Photograph 4
Looking East Towards Building 153 (Vehicle Turnaround AT Left)

Photograph 5
Looking North Towards Building 158 (Secondary Excavation Site)

Photograph 6
Looking South Towards Building 158 (Secondary Excavation Site)

Photograph 7
Knight Soil Screener - Model Pro-Screen 1605
(left side view)

Photograph 8
Knight Soil Screener - Model Pro-Screen 1605
(Rear right side view)

Photograph 9
Semi-tractor Truck and Live-Bottom Trailer

Photograph 10
Hopper/Soil Dump Conveyor System
(Wilson Mfg. Tow-behind Unit)

Photograph 11
Backhoe/Loader - Caterpillar Model 416B

Photograph 12
Skid Steer Loader - John Deere Model 6675

Photograph 13
Amendment Grinder/Mixer - Supreme Model 700

Photograph 14
Amendment Grinder/Mixer Scale Operators Panel With Digital Display

Photograph 15
Farm Tractor With Loader Attachment - John Deere Model 7710

Photograph 16
Center-Pivot Wheel Loader - Caterpillar Model 966F

Photograph 17
Windrow Compost Turner - Scarab Model 20HYD450
(Rear View)

Photograph 18
Windrow Compost Turner - Scarab Model 20HYD450
(Front-Right Side View)

APPENDIX C

BIOREMEDIATION FACILITY DRAWINGS

LIST OF DRAWINGS

G-100	Bioremediation Facility, Crane NSWC, Master Site/Drainage Plan
4324-0009-01-A	NSWC Crane, Soil Remediation Facility Process Flow
4324-0009-01-B	NSWC Crane, Wastewater Collection Process Flow
4324-0009-01-C	NSWC Crane, Soil Excavation Site Process Flow
P-100	Bioremediation Facility, Amendment Loading - Windrows #1-4
P-101	Bioremediation Facility, Amendment Loading - Windrows #5-8
P-102	Bioremediation Facility Soil Loading - Windrows #1-4
P-103	Bioremediation Facility Soil Loading - Windrows #5-8

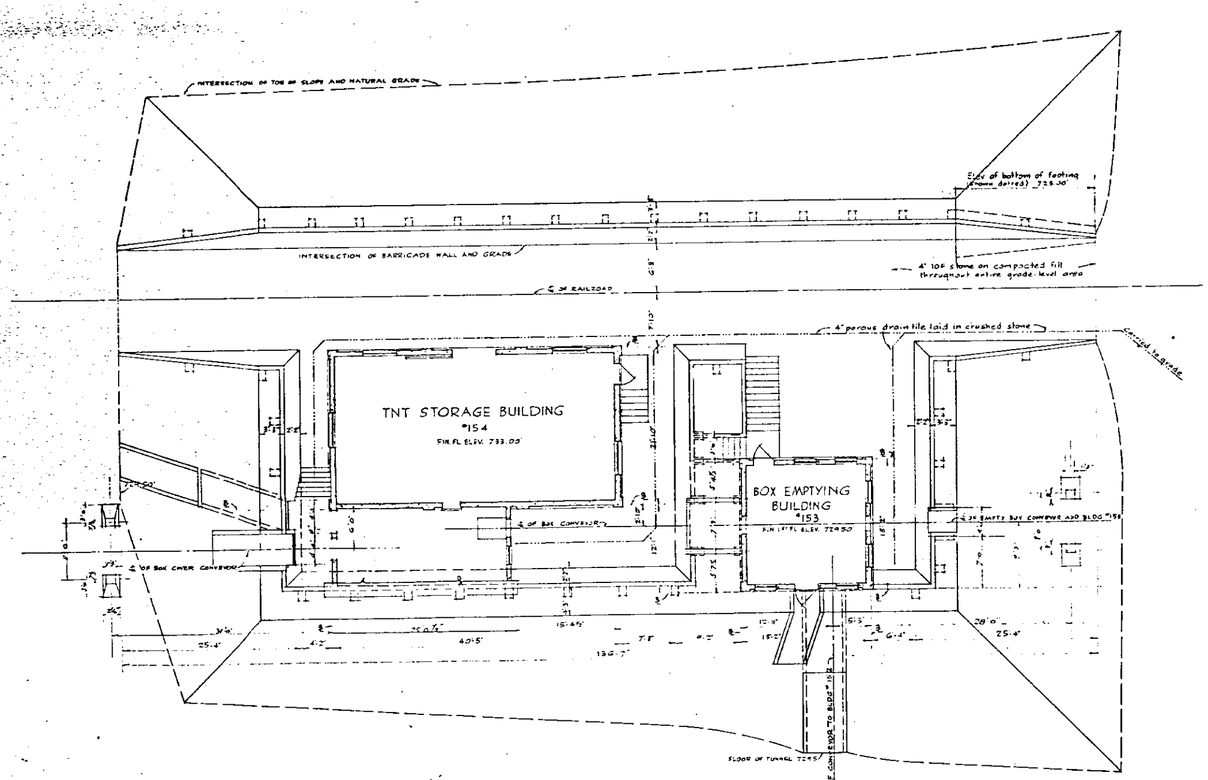

PLAN SHOWING BARRICADE WALLS
Scale: 1/8" = 1'-0"
Bottom of all footings to be at 725.50' except where noted otherwise on this plan.

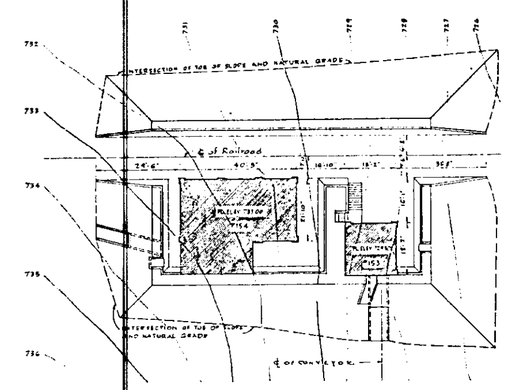

PLOT PLAN FOR BLDG. 153 & 154
Scale: 1" = 20'

NORTH

Scale ... as noted

Revision	Date	Brief	By
2	12-23-41	Revised Conveyor Foundation, etc.	
1	11-10-41	Add Conveyor	

CONTRACT NOy 4469

NAVY DEPARTMENT — BUREAU OF YARDS & DOCKS

Approved ...
For Chief of Bureau

Y & D Drawing No. 176293

Drawn by R.G.R.
Traced by A.J.R.
Checked by R.G.R.

Sheet 2 of 11

Engineers Job No. 4005

Engineers Dwg. No. A-2

U. S. NAVAL AMMUNITION DEPOT
BURNS CITY, INDIANA
BOMB & MINE FILLING PLANT
BOX EMPTYING BLDG. 153 & TNT STORAGE BLDG. 154 PLANT "A"

Submitted 11-26-41 Approved 11-29-41

RUSSELL B. MOORE CO.
Consulting Engineers
Indianapolis, Indiana

By ... Acting Chief Engineer

By ... Officer in Charge of Construction

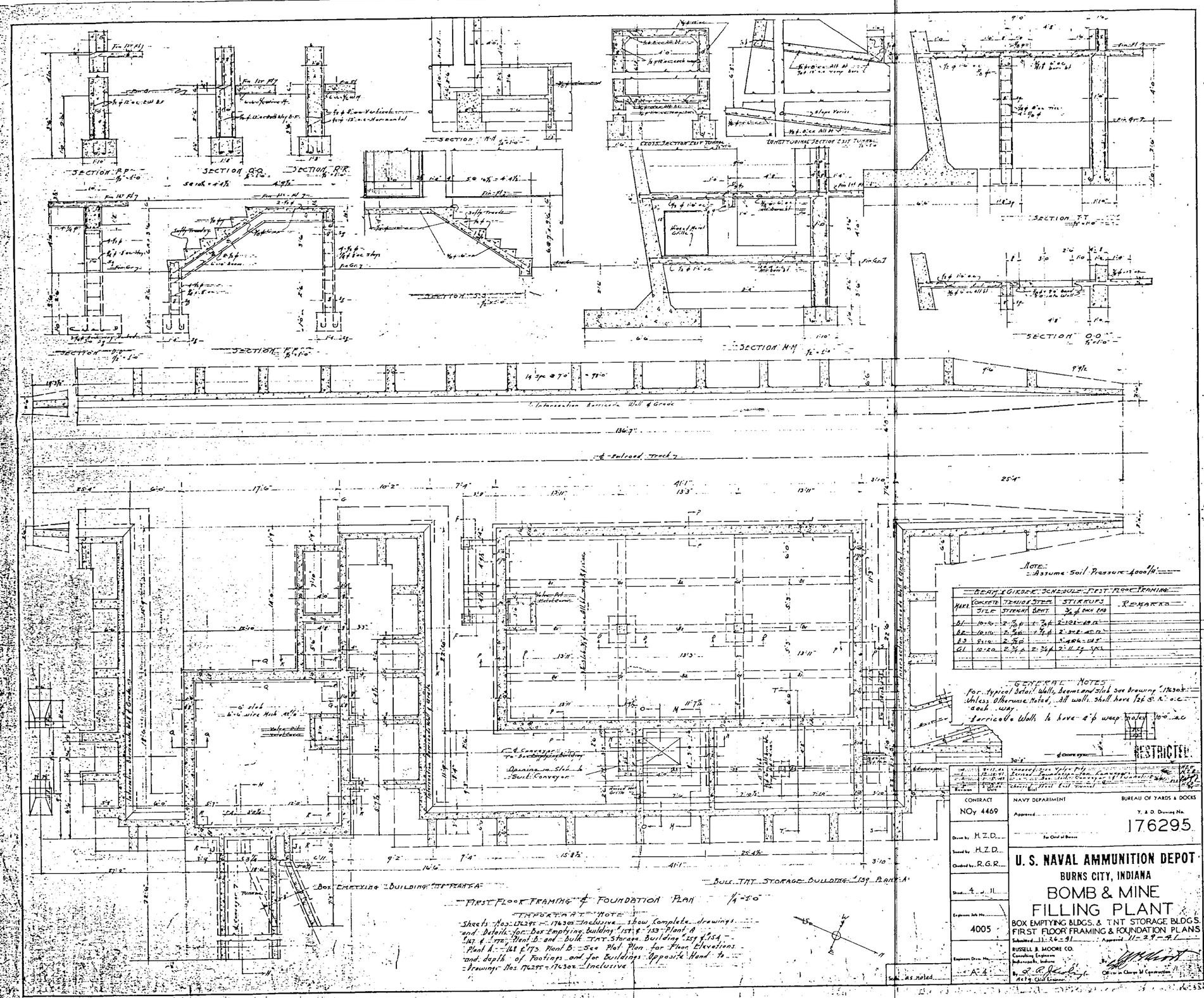
SECTION P-P
SECTION Q-Q
SECTION R-R
SECTION N-N
CROSS SECTION EAST TUNNEL
LONGITUDINAL SECTION EAST TUNNEL
SECTION T-T
SECTION O-O
SECTION S-S
SECTION U-U
SECTION V-V
SECTION H-H
Intersection Barricade Wall & Grade
℄ Railroad Track
Box Emptying Building 1st Plant A
Bulk TNT Storage Building 1st Plant A
First Floor Framing & Foundation Plan
1/4"=1'-0"
Note: Assume Soil Pressure 4000#/□'
Beam & Girder Schedule First Floor Framing
Mark
Concrete Size
Tension Steel Stirrups
Remarks
General Notes
Restricted
Contract NOy 4469
Navy Department
Bureau of Yards & Docks
Y. & D. Drawing No. 176295
U. S. Naval Ammunition Depot
Burns City, Indiana
Bomb & Mine Filling Plant
Box Emptying Bldgs. & TNT Storage Bldg's.
First Floor Framing & Foundation Plans
Drawn by H.Z.D.
Traced by H.Z.D.
Checked by R.G.R.
Engineer Job No. 4005
Engineer Drw. No. A-4
Russell B. Moore Co.
Consulting Engineers
Indianapolis, Indiana
Scale as noted

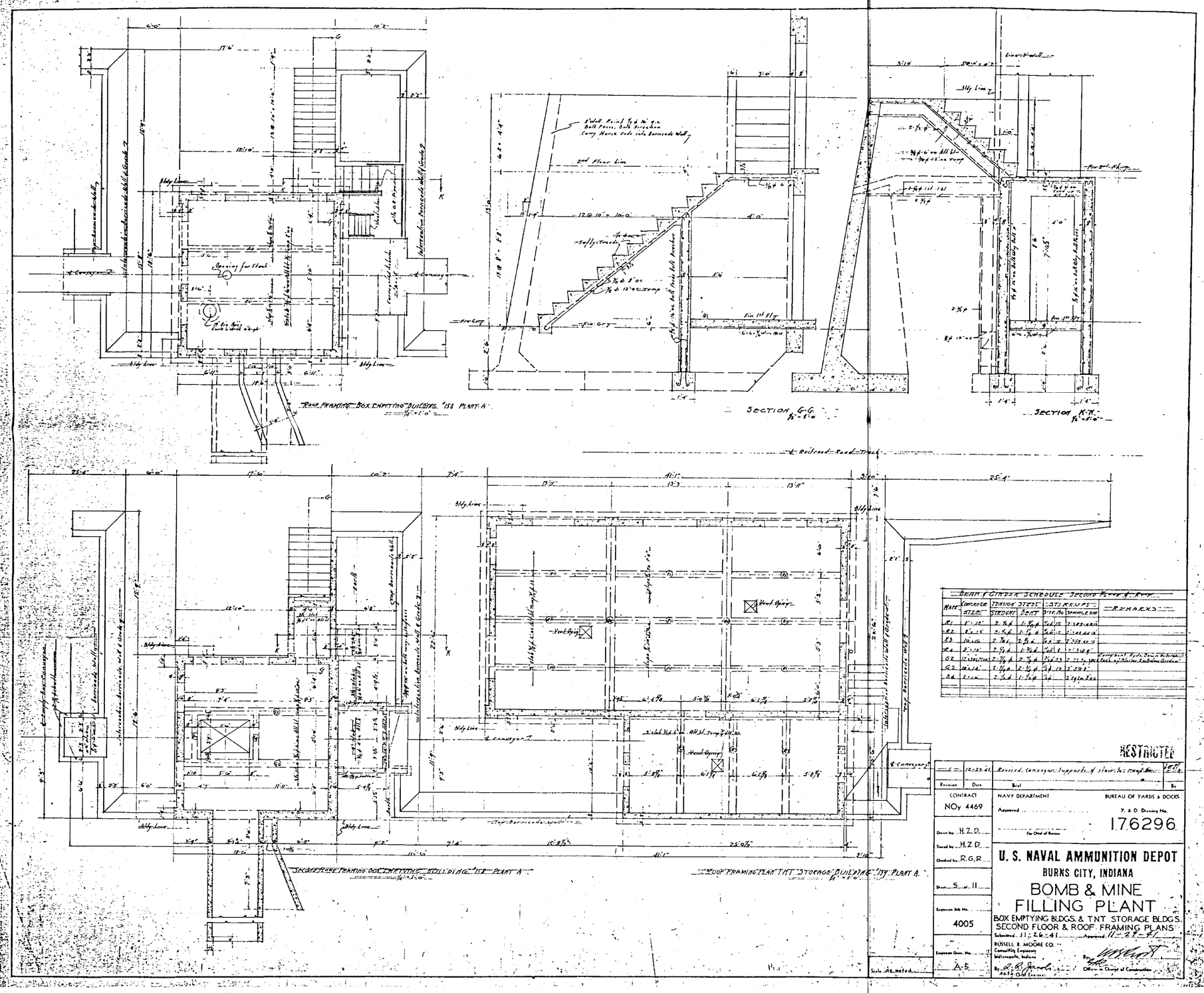
Roof Framing Box Emptying Building 158 Plant A
Section G-G
Section K-K
Second Floor Framing Box Emptying Building 158 Plant A
Roof Framing Plan TNT Storage Building 159 Plant A
Railroad Road Track
Beam & Girder Schedule Second Floor & Roof
Mark
Concrete Size
Tension Steel Straight
Tension Steel Bent
Stirrups Size No.
Stirrups Spacing & End
Remarks
Revised Conveyor Supports & Stairs in Roof Bin
Revision
Date
Brief
By
RESTRICTED
Contract NOy 4469
Navy Department
Bureau of Yards & Docks
Y. & D. Drawing No.
176296
Drawn by H.Z.D.
Traced by H.Z.D.
Checked by R.G.R.
Date 5-11
Engineer Job No. 4005
Engineer Dwg. No. A-5
Scale As noted
U. S. NAVAL AMMUNITION DEPOT
BURKS CITY, INDIANA
BOMB & MINE FILLING PLANT
BOX EMPTYING BLDGS. & TNT STORAGE BLDGS.
SECOND FLOOR & ROOF FRAMING PLANS
Submitted 11-26-41
Approved 11-27-41
RUSSELL B. MOORE CO.
Consulting Engineers
Indianapolis, Indiana
Acting Chief Engineer
Officer in Charge of Construction

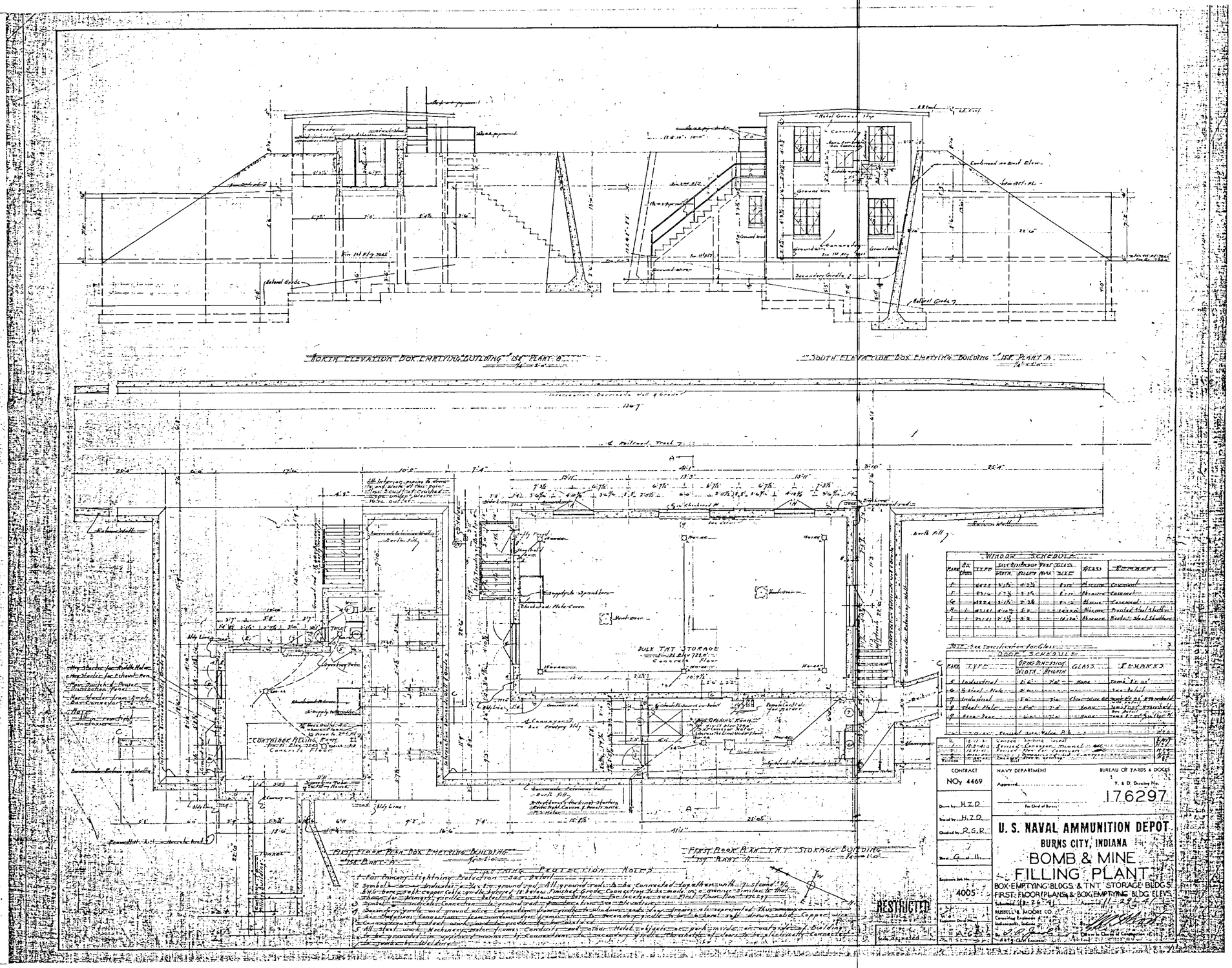
North Elevation Box Emptying Building 1st Plant A
South Elevation Box Emptying Building 1st Plant A
Railroad Track
Bulk TNT Storage
Contraber Filling Room
First Floor Plan Box Emptying Building 1st Plant A
First Floor Plan TNT Storage Building 1st Plant A
Lightning Protection Notes
Window Schedule
Door Schedule
Contract NOy 4469
Navy Department
Bureau of Yards & Docks
Y. & D. Division No.
176297
U. S. Naval Ammunition Depot
Burns City, Indiana
Bomb & Mine Filling Plant
Box Emptying Bldgs. & TNT Storage Bldgs.
First Floor Plans & Box Emptying Bldg. Elevs.
Russell B. Moore Co.
Consulting Engineers
Indianapolis, Indiana
4005
Restricted

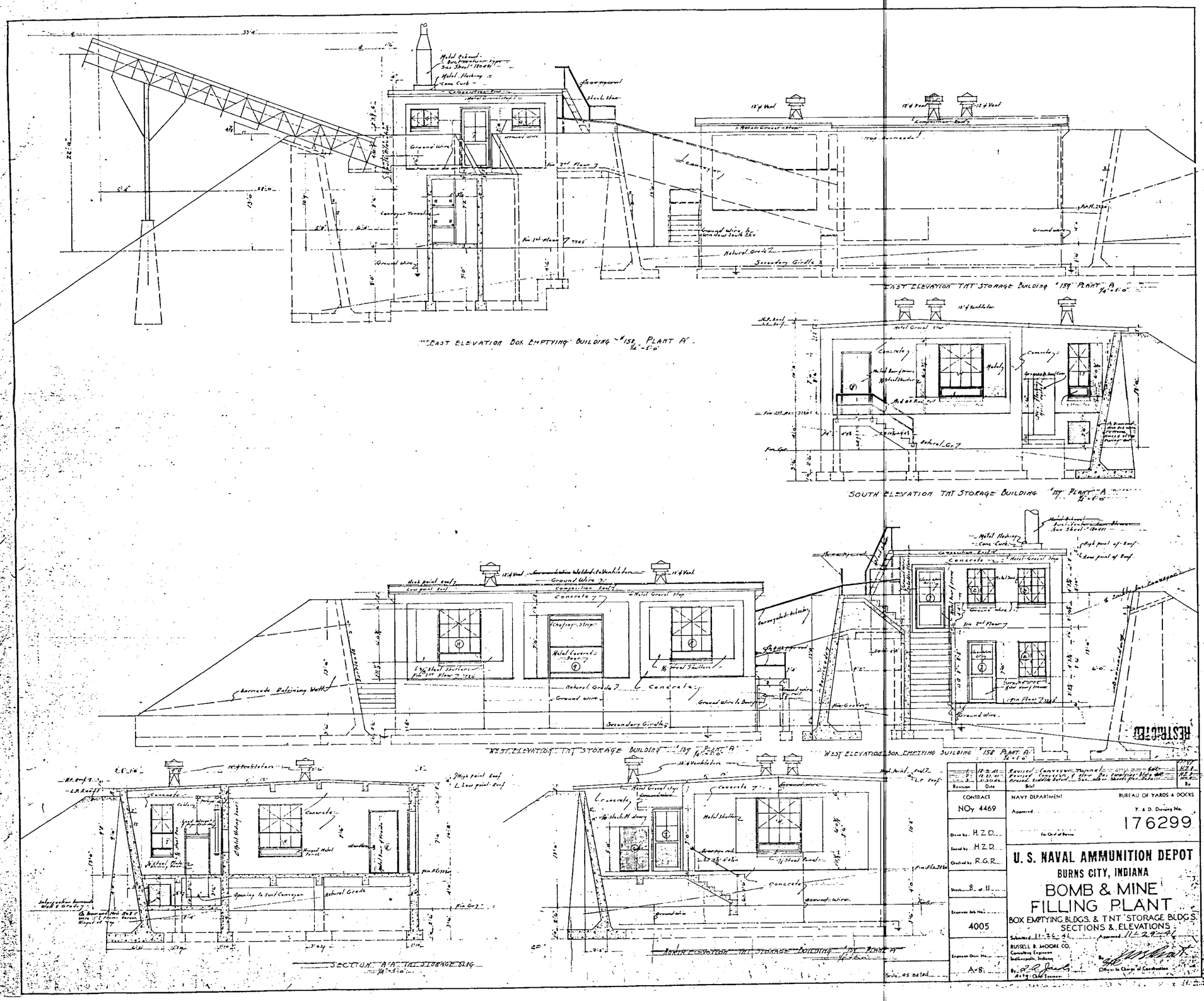

Revision	Date	Bid
1	12-2-41	Revised Conveyor Tunnel
2	12-12-41	Revised Conveyor & Stairs
3	12-15-41	Revised Middle Retaining Wall

CONTRACT NOy 4469

Drawn by H.Z.D.
Traced by H.Z.D.
Checked by R.G.R.
Sheet 8 of 11
Engineers Job No. 4005
Engineers Dwg. No. A-8
Scale as noted

NAVY DEPARTMENT — BUREAU OF YARDS & DOCKS

Approved
Y. & D. Drawing No. 176299

U.S. NAVAL AMMUNITION DEPOT
BURNS CITY, INDIANA
BOMB & MINE FILLING PLANT
BOX EMPTYING BLDGS. & TNT STORAGE BLDGS. SECTIONS & ELEVATIONS

Submitted 11-26-41 Approved 11-29-41

RUSSELL B. MOORE CO.
Consulting Engineers
Indianapolis, Indiana
By R.R. Jones
Asst. Chief Engineer

By
Officer in Charge of Construction

RESTRICTED

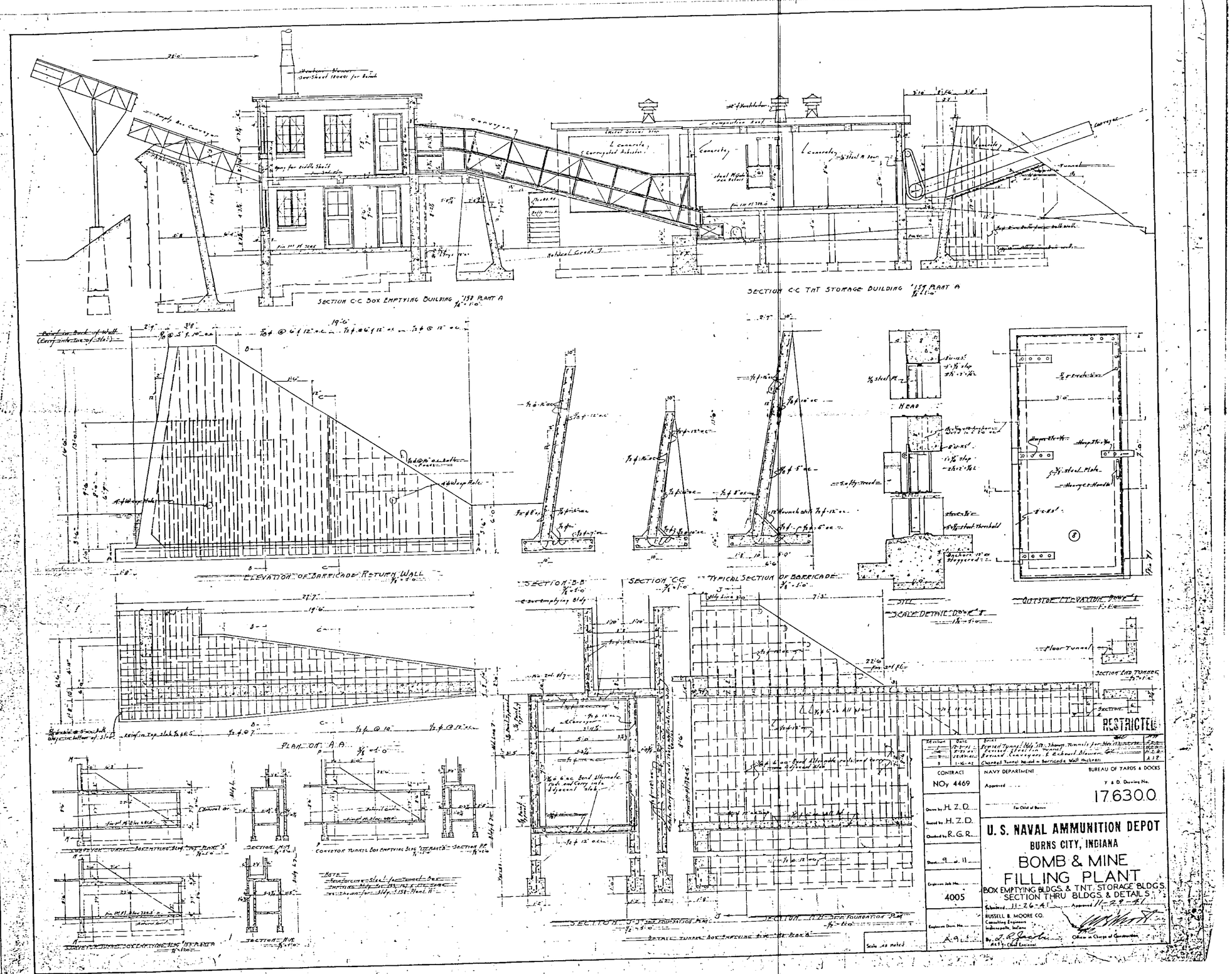
SECTION C-C BOX EMPTYING BUILDING 158 PLANT A
SECTION C-C TNT STORAGE BUILDING 159 PLANT A
ELEVATION OF BARRICADE RETURN WALL
SECTION B-B
SECTION C-C
TYPICAL SECTION OF BARRICADE
HEAD
SCALE DETAIL DOOR
OUTSIDE ELEVATION DOOR
SECTION END TUNNEL
PLAN OF A.P.
CONVEYOR TUNNEL BOX EMPTYING BLDG 158 PLANT A
SECTION A-A
SECTION B-B
SECTION C-C
SECTION D-D
SECTION E-E
SECTION F-F
SECTION G-G
SECTION H-H
DETAIL TUNNEL BOX EMPTYING BLDG 158 PLANT A
RESTRICTED
CONTRACT NOy 4469
NAVY DEPARTMENT
BUREAU OF YARDS & DOCKS
Y. & D. Drawing No. 17630.0
Drawn by H. Z. D.
Traced by H. Z. D.
Checked by R. G. R.
Sheet 9 of 11
Engineer Job No. 4005
Engineer Drawing No. A 9.1
U. S. NAVAL AMMUNITION DEPOT
BURNS CITY, INDIANA
BOMB & MINE FILLING PLANT
BOX EMPTYING BLDGS. & TNT. STORAGE BLDGS.
SECTION THRU BLDGS. & DETAILS
Submitted 11-26-41 Approved 11-29-41
RUSSELL B. MOORE CO.
Consulting Engineers
Indianapolis, Indiana
Asst. Chief Engineer
Officer in Charge of Construction
Scale as noted

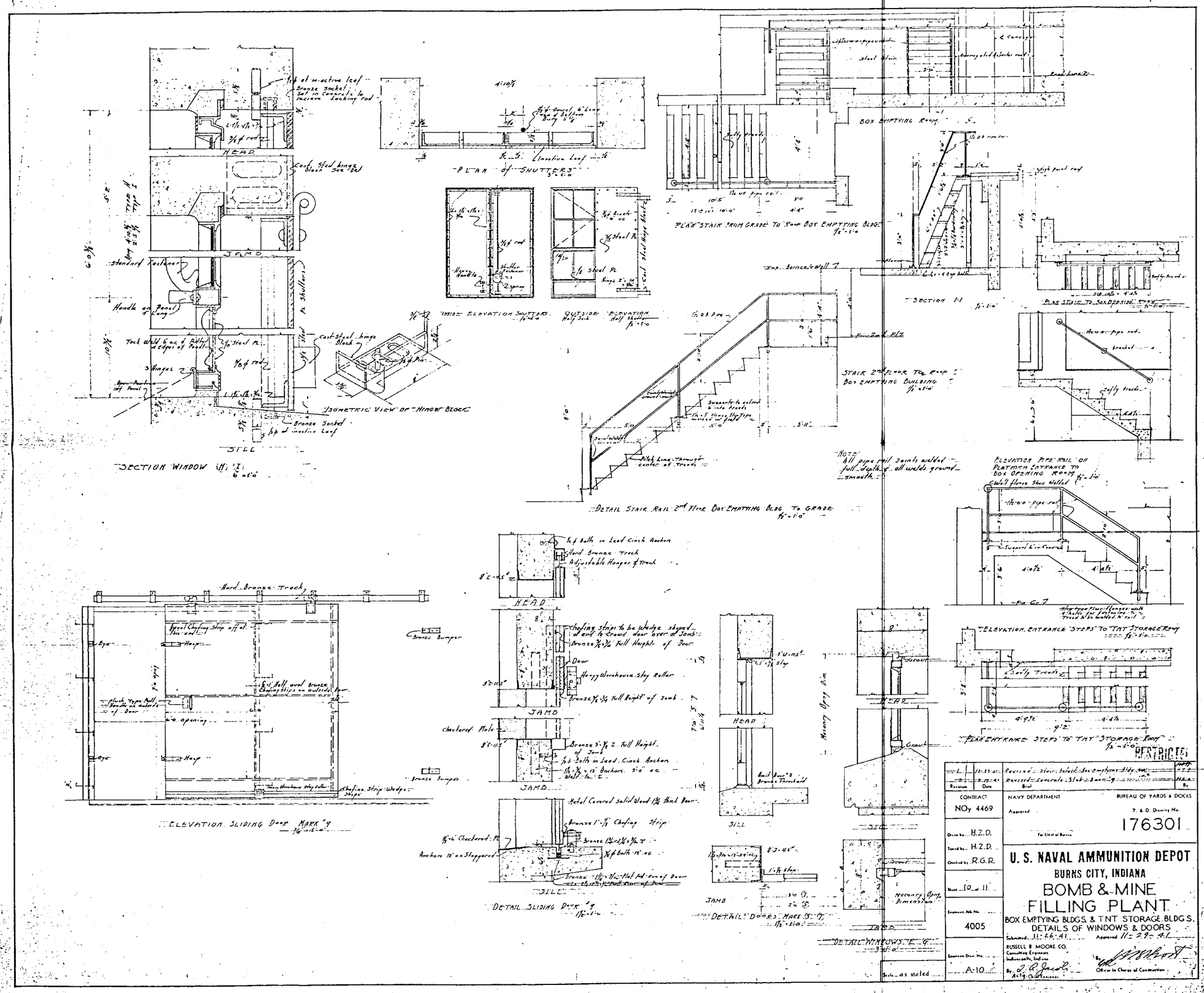
SECTION WINDOW
HEAD
JAMB
SILL
Standard Fastener
Handle on Panel if Long
Bronze Socket
PLAN of SHUTTERS
INSIDE ELEVATION SHUTTERS
OUTSIDE ELEVATION
ISOMETRIC VIEW OF HINGE BLOCK
BOX EMPTYING ROOM
PLAN STAIR FROM GRADE TO ROOF BOX EMPTYING BLDG.
SECTION 1-1
PLAN STAIR TO SUB-BASEMENT
STAIR 2nd FLOOR TO ROOF BOX EMPTYING BUILDING
DETAIL STAIR RAIL 2nd FLOOR BOX EMPTYING BLDG. TO GRADE
NOTE
All pipe rail joints welded full depth of all welds ground smooth.
ELEVATION PIPE RAIL ON PLATFORM ENTRANCE TO BOX EMPTYING ROOM
ELEVATION ENTRANCE STEPS TO TNT STORAGE ROOM
PLAN ENTRANCE STEPS TO TNT STORAGE ROOM
ELEVATION SLIDING DOOR MARK "9"
DETAIL SLIDING DOOR "9"
DETAIL DOORS MARK "S" "T"
DETAIL WINDOWS "E" "G"
Hard Bronze Track
Bronze Bumper
Heavy Warehouse Sky Roller
Chafing Strip Wedge Shape
Anchors 12" o.c. Staggered
Hardware Dim.
Scale as noted
RESTRICTED
CONTRACT NOy 4469
NAVY DEPARTMENT
BUREAU OF YARDS & DOCKS
Y. & D. Drawing No. 176301
Drawn by H.Z.D.
Traced by H.Z.D.
Checked by R.G.R.
Sheet 10 of 11
Engineers Job No. 4005
Engineers Dwg. No. A-10
U. S. NAVAL AMMUNITION DEPOT
BURNS CITY, INDIANA
BOMB & MINE FILLING PLANT
BOX EMPTYING BLDGS. & TNT STORAGE BLDGS.
DETAILS OF WINDOWS & DOORS
Submitted 11-26-41
Approved 11-29-41
RUSSELL B. MOORE CO.
Consulting Engineers
Indianapolis, Indiana
Acting Chief Engineer
Officer in Charge of Construction

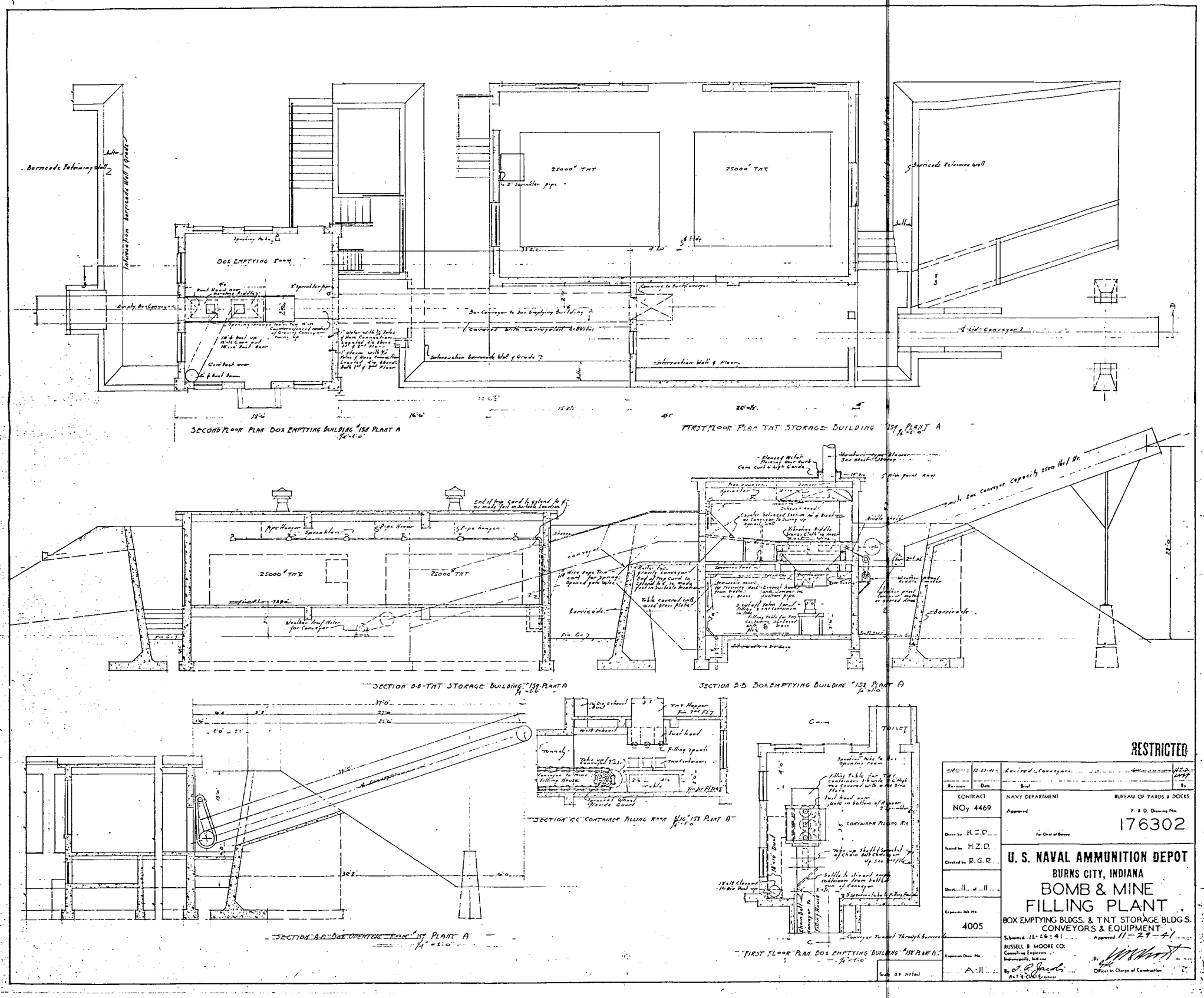

RESTRICTED

Revision	Date	Brief	By
	12-23-41	Revised - Conveyors	H.Z.D.

CONTRACT NOy 4469

NAVY DEPARTMENT — BUREAU OF YARDS & DOCKS

Approved — For Chief of Bureau

Y. & D. Drawing No. 176302

Drawn by H.Z.D.
Traced by H.Z.D.
Checked by R.G.R.
Sheet 11 of 11
Expression Job No. 4005
Expression Draw. No. A-11
Scale as noted

U. S. NAVAL AMMUNITION DEPOT
BURNS CITY, INDIANA
BOMB & MINE FILLING PLANT
BOX EMPTYING BLDGS. & TNT STORAGE BLDGS. CONVEYORS & EQUIPMENT

Submitted 11-26-41 — Approved 11-27-41

RUSSELL B MOORE CO.
Consulting Engineers
Indianapolis, Indiana
By J. R. Jacob
Asst. Civil Engineer

By W. H. Wright
Officer in Charge of Construction

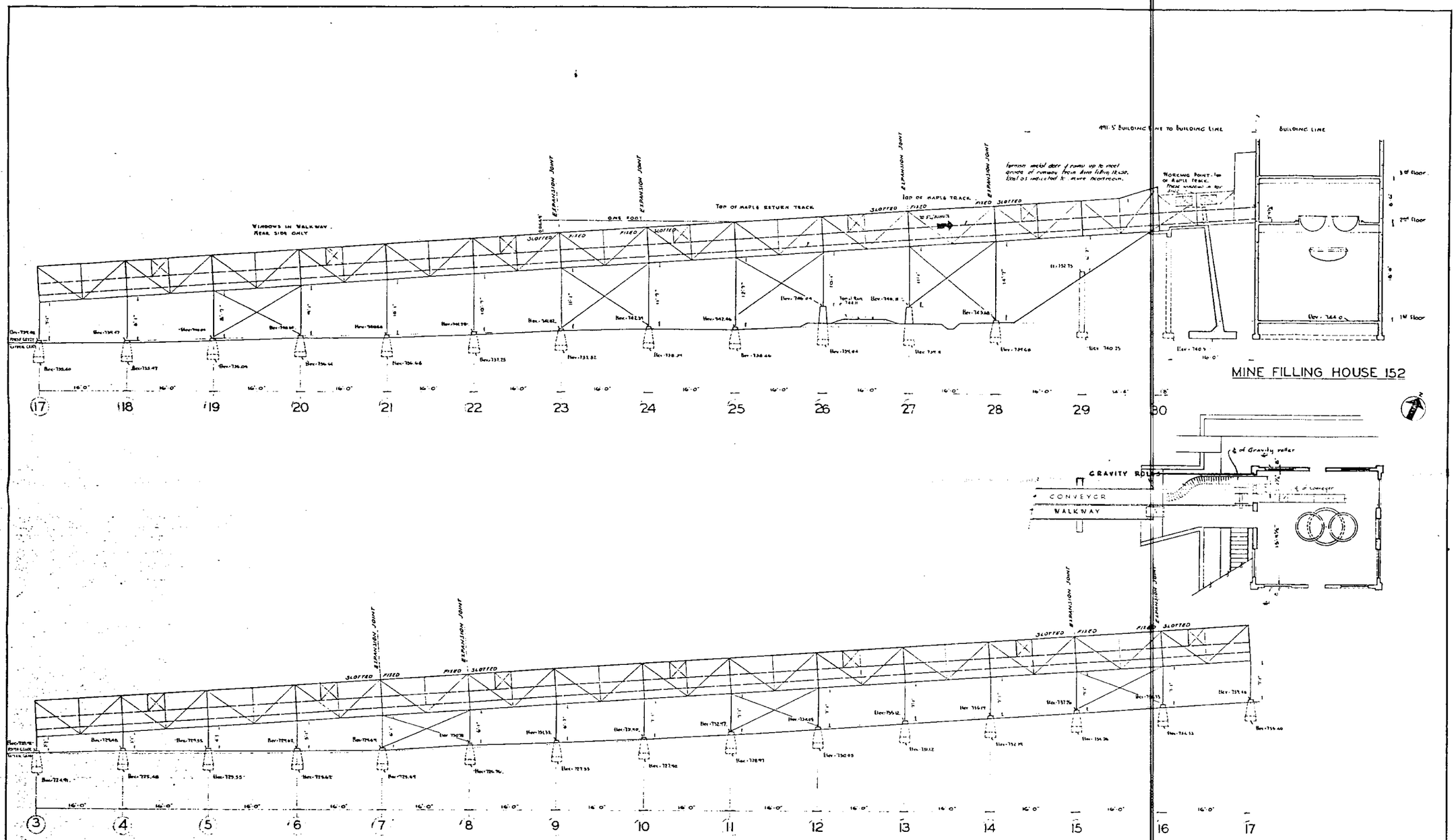

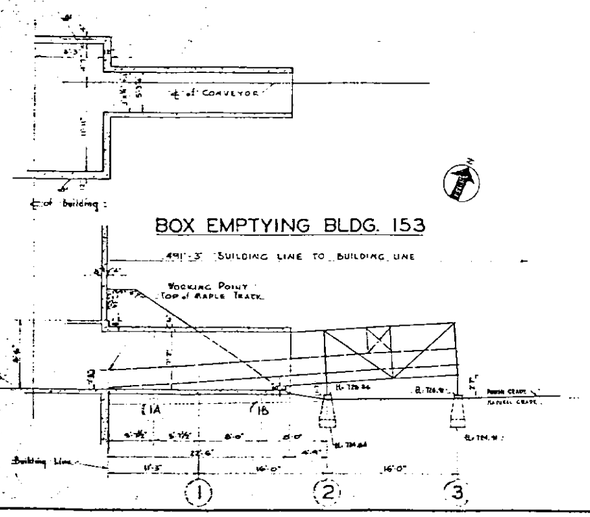

ELEVATION OF CONVEYOR NO. 2

NOTE!
1. PROVIDE FOR EXPANSION AT BUILDINGS, AT TOWERS, FOR LONGITUDINAL ANGLES, AND FOR TRACK SUPPORTS. SEE Y & D. SHT. #180490 FOR DETAILS
2. FOR STEEL BENT DETAILS. SEE Y. & D. #180487.
3. FOR STEEL BAY DETAILS & TYPICAL SECTIONS SEE Y & D #180488.
4. LONGITUDINAL BRACING TO BE 2½ x 2 x 5/16 - 2' long G.S.

Scale 1/8" = 1'-0"

Revision	Date	Brief	By
1	1-10-42	INDICATED EXPANSION JOINTS FIXED & SLOTTED, & ADDED TO NOTE NO 1.	D.E.W.

CONTRACT NOy 4469

Drawn by D D D
Traced by D D D
Checked by F C E.

Sheet 2 of 11

Engineer Job No. 4005

Engineer Drawg. No. 2 A

NAVY DEPARTMENT — BUREAU OF YARDS & DOCKS

Approved: For Chief of Bureau

Y. & D. Drawing No. 180484

U. S. NAVAL AMMUNITION DEPOT
BURNS CITY, INDIANA
BOMB & MINE FILLING PLANT
'A' AREA - CONVEYOR NO. 2 BETWEEN BLDG. 152 & 153

Submitted 12-22-41 Approved 12-23-41

RUSSELL B. MOORE CO.
Consulting Engineers
Indianapolis, Indiana
By O. R. Jacobs
Asst. Chief Engineer

By W. B. Wood
Officer in Charge of Construction

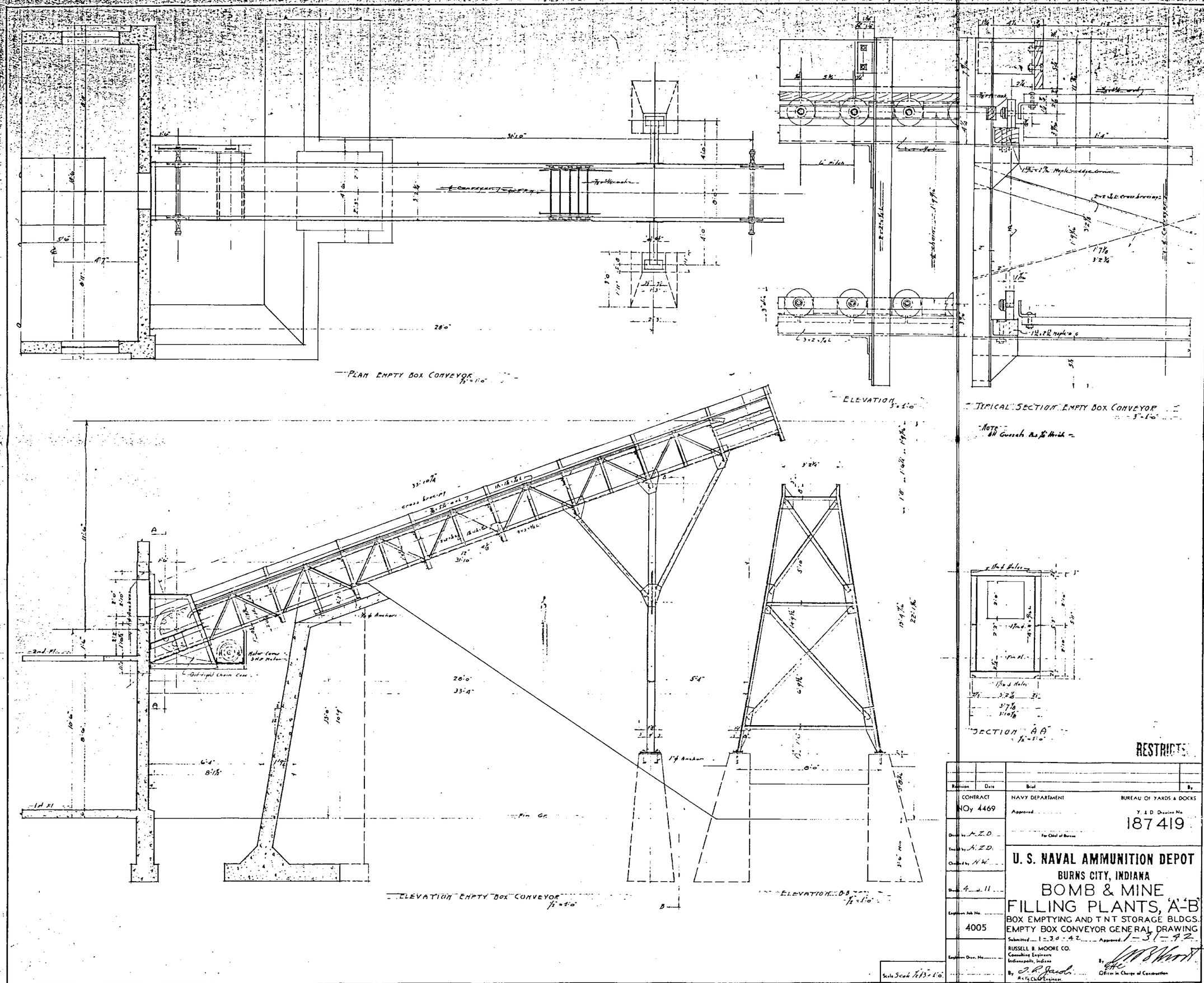
PLAN EMPTY BOX CONVEYOR
1/2" = 1'-0"
ELEVATION
3" = 1'-0"
TYPICAL SECTION EMPTY BOX CONVEYOR
3" = 1'-0"
NOTE
All Gussets Are 3/8" Thick
SECTION "AA"
1/2" = 1'-0"
ELEVATION EMPTY BOX CONVEYOR
1/2" = 1'-0"
ELEVATION "BB"
1/2" = 1'-0"
RESTRICTED
Revision
Date
Brief
By
CONTRACT
NOy 4469
NAVY DEPARTMENT
BUREAU OF YARDS & DOCKS
Approved
For Chief of Bureau
Y. & D. Drawing No.
187419
Drawn by H. Z. D.
Traced by H. Z. D.
Checked by H. W.
Sheet 4 of 11
Engineer Job No.
4005
Engineer Dwg. No.
U. S. NAVAL AMMUNITION DEPOT
BURNS CITY, INDIANA
BOMB & MINE
FILLING PLANTS, 'A'-'B'
BOX EMPTYING AND T N T STORAGE BLDGS.
EMPTY BOX CONVEYOR GENERAL DRAWING
Submitted 1-30-42 Approved 1-31-42
RUSSELL B. MOORE CO.
Consulting Engineers
Indianapolis, Indiana
By J. R. Jacobs
Asst. Chief Engineer
By
Officer in Charge of Construction
Scale Scale 1/8" = 1'-0"

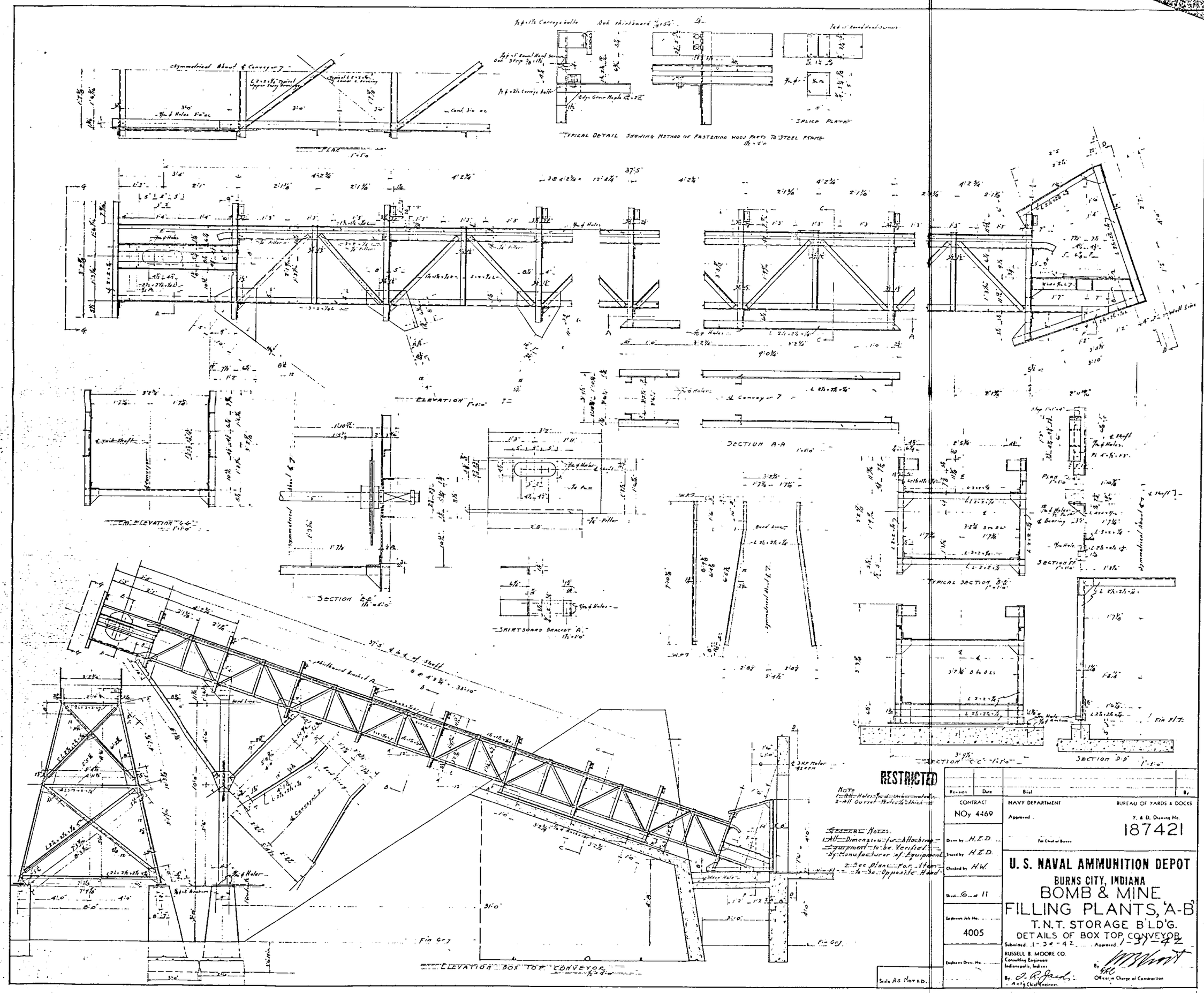
PLAN
TYPICAL DETAIL SHOWING METHOD OF FASTENING WOOD PARTS TO STEEL FRAME
SPLICE PLATE
ELEVATION
SECTION A-A
SECTION E-E
SKIRTBOARD BRACKET 'A'
TYPICAL SECTION B-B
SECTION C-C
SECTION D-D
ELEVATION BOX TOP CONVEYOR
RESTRICTED
NOTE
1-All Holes 7/16" diameter unless noted.
2-All Gusset Plates 5/16" thick.
GENERAL NOTES.
1-All Dimensions for Attachment of Equipment to be Verified by Manufacturer of Equipment.
2-See Plan for Item to be Opposite Hand.
Scale As Noted.
Revision | Date | Brief | By
CONTRACT NOy 4469
NAVY DEPARTMENT
BUREAU OF YARDS & DOCKS
Approved
For Chief of Bureau
Y. & D. Drawing No. 187421
Drawn by H.Z.D.
Traced by H.Z.D.
Checked by H.W.
Sheet G and H
Engineers Job No. 4005
Engineers Drawing No.
U. S. NAVAL AMMUNITION DEPOT
BURNS CITY, INDIANA
BOMB & MINE FILLING PLANTS, 'A-B'
T.N.T. STORAGE B'LD'G.
DETAILS OF BOX TOP CONVEYOR
Submitted 1-30-42 Approved 1-31-42
RUSSELL B. MOORE CO.
Consulting Engineers
Indianapolis, Indiana
By J. R. Jacobs
Asst. Chief Engineer
By
Officer in Charge of Construction

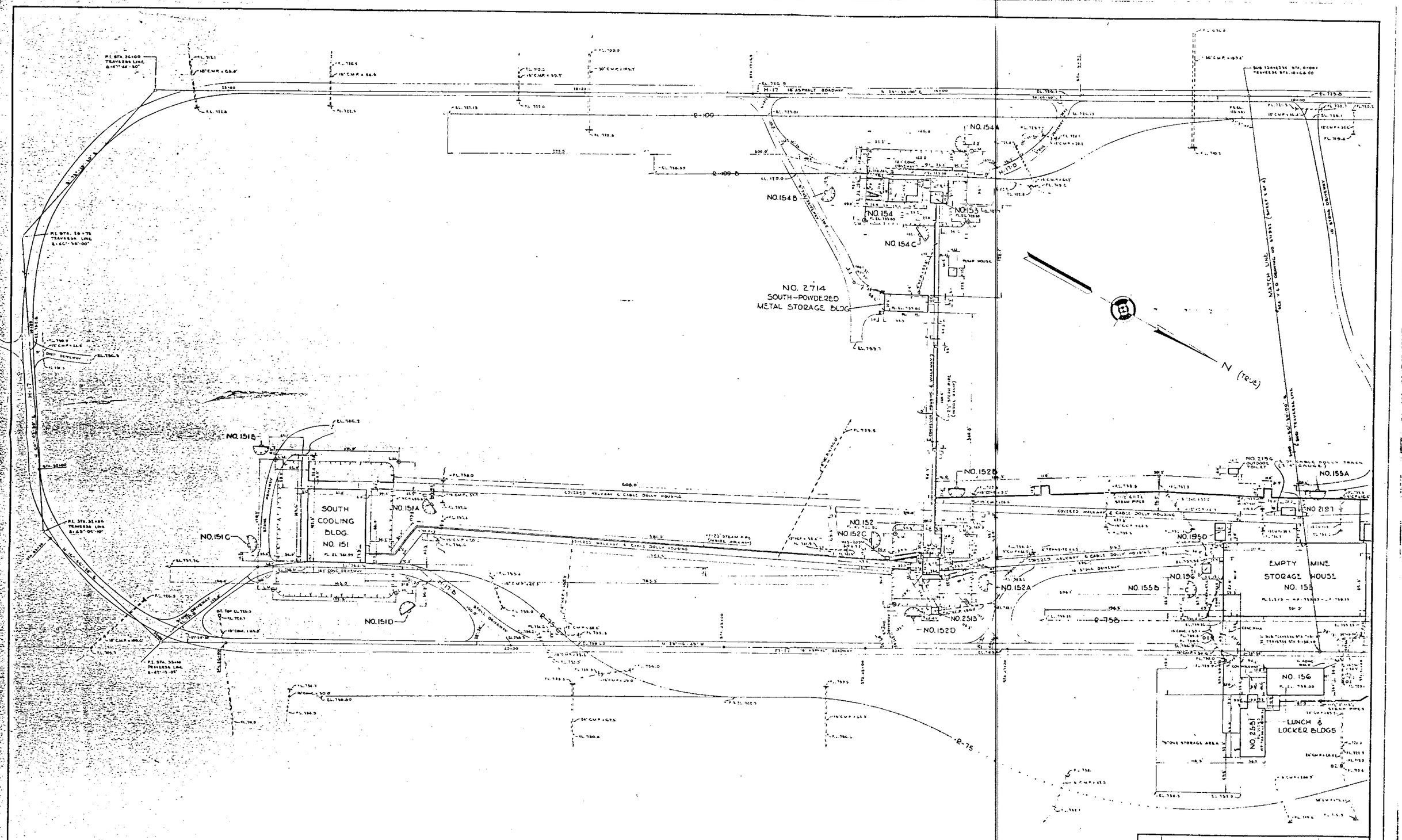

SCHEDULE OF BUILDINGS

NO.	NAME
151	COOLING BLDG.
152	FILLING HOUSE
153	BOX EMPTYING BLDG.
154	STORAGE BLDG.
155	EMPTY MINE STORAGE HOUSE
155D	CABLE DRIVE HOUSE
156	LUNCH, LOCKER & OFFICE BLDG.
196	PAINT LOCKER
2197	CAR REPAIR SHED
2513	SAFETY BOOT & SHOE BLDG.
2591	LUNCH & LOCKER BLDG.
2715	POWDERED METAL STO. BLDG.

SYMBOLS

RAILROAD
SIDEWALK & WALKWAY
STEAM ABOVE GROUND

LEGEND

F.L. FLOOR LINE
L.W. LIGHTING WIRE
D.I. DROP INLET
P.S. POINT OF SWITCH

DROP INLET
LIGHTING WIRE
SIGNAL

SYMBOL	DESCRIPTION	DATE	APPROVAL
	REVISIONS		

PWD DRAWING NO.

DEPARTMENT OF THE NAVY
NINTH NAVAL DISTRICT
BUREAU OF YARDS & DOCKS
CHICAGO, ILLINOIS

U.S. NAVAL AMMUNITION DEPOT CRANE, INDIANA

PLOT PLAN

MINE FILLING AREA "A"

GENERAL & STEAM

H. LEON GAINES & COMPANY
CONSULTING ENGINEERS
190 N. WACKER DRIVE
CHICAGO, ILLINOIS

APPROVED G. D. Lacy DATE 9-21-53

APPROVED FOR BUREAU OF YARDS & DOCKS
APPROVED FOR CHIEF OF BUREAU
DATE 2-1-54

SCALE 1" = 50'
SHEET 1 OF 4
NOY 73,937
Y&D DRAWING NO. 571,931

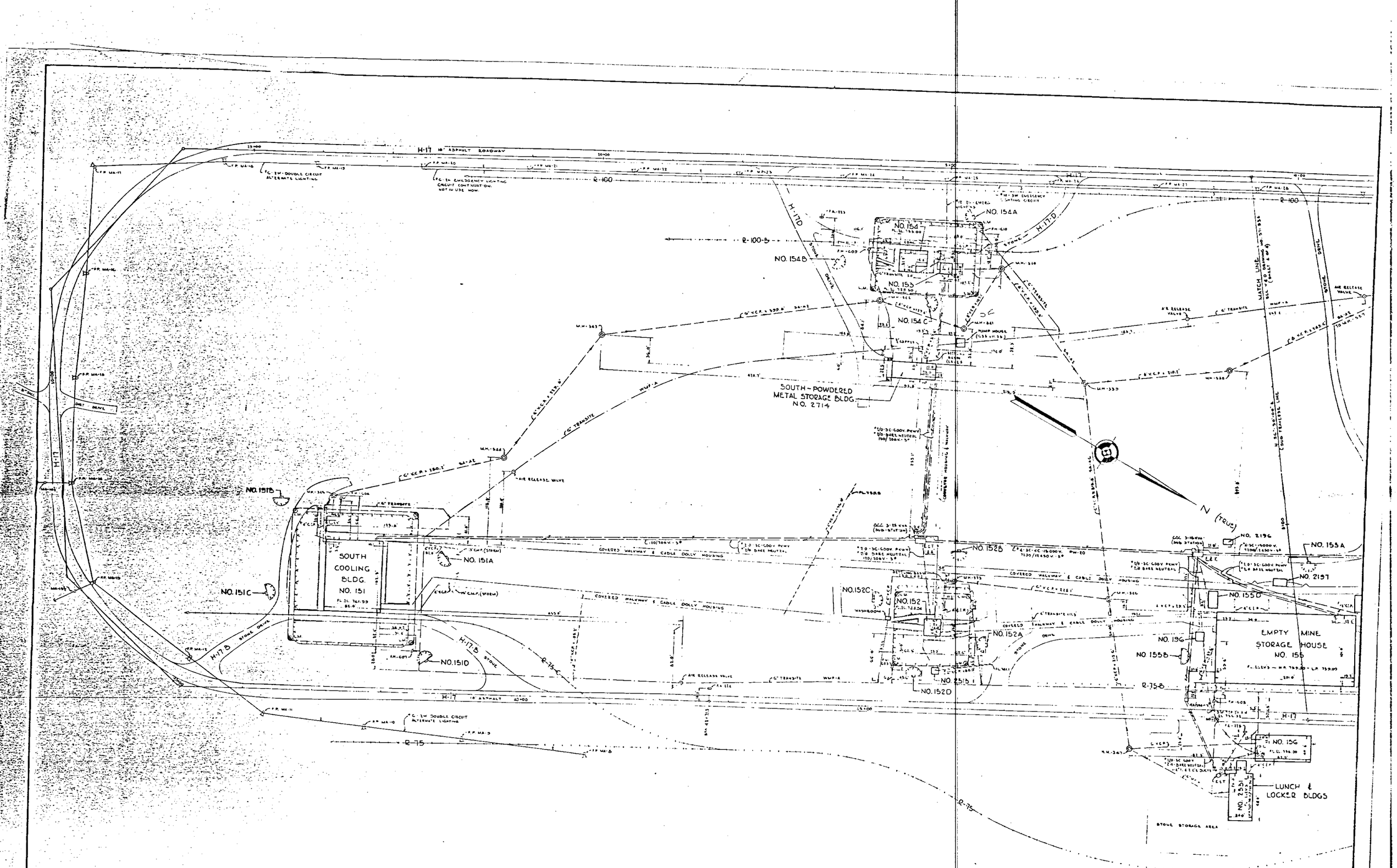

SCHEDULE SANITARY SEWER MANHOLE ELEVS		
M.H. NO.	TOP ELEV.	OUTLET INV. ELEV.
358	721.5	721.4
359	722.4	722.4
360	723.8	723.7
361	723.5	724.1
362	723.7	725.8
363	726.4	731.0
364	740.5	734.0
365	733.2	733.4
366	739.6	735.5
367	742.0	737.0
373	744.4	738.5

SCHEDULE OF BUILDINGS

NO.	NAME
151	COOLING BLDG.
152	FILLING HOUSE
153	BOX EMPTYING BLDG.
154	STORAGE BLDG.
155	EMPTY MINE STORAGE HOUSE
155D	CABLE DRIVE HOUSE
156	LUNCH, LOCKER & OFFICE BLDG.
196	PAINT LOCKER
2197	CAD REPAIR SHED
2515	SAFETY BOOT & SHOE BLDG.
2551	LUNCH & LOCKER BLDG.
2715	POWDERED METAL STO BLDG.

SYMBOLS

RAILROAD
SEWER
WATER MAIN
OVERHEAD LIGHTING - 1 WIRE
OVERHEAD LIGHTING - 3 WIRE
3Ø PRIMARY OVERHEAD
3Ø PRIMARY UNDERGROUND
3Ø SECONDARY OVERHEAD
3Ø SECONDARY UNDERGROUND
1Ø SECONDARY UNDERGROUND
TELEPHONE OVERHEAD
TELEPHONE UNDERGROUND
FIRE ALARM OVERHEAD
FIRE ALARM UNDERGROUND

MANHOLE
VALVE
AIR RELEASE VALVE
FIRE HYDRANT
FLOODLIGHT
POWER POLE
ELECTRIC & TELEPHONE VAULT
LIGHTING MAST
TRANSFORMER
DISTRIBUTION CAN
FIRE ALARM BOX
DUGOUT

LEGEND

M.H. MANHOLE
F.H. FIRE HYDRANT
F.P. FLOODLIGHT POLE
E.&T. ELECTRIC & TELEPHONE VAULT
F.A. FIRE ALARM BOX
L.M. LIGHTING MAST
D.C. DISTRIBUTION CAN

NOTE: THE FIRE ALARM SYSTEM HAS BEEN DESTROYED BY NEW CONSTRUCTION AND AS YET IS STILL DISCONNECTED

SYMBOL	DESCRIPTION	DATE	APPROVAL
	REVISIONS		

PWD DRAWING NO.

DEPARTMENT OF THE NAVY
NINTH NAVAL DISTRICT
BUREAU OF YARDS & DOCKS
CHICAGO, ILLINOIS
U.S. NAVAL AMMUNITION DEPOT CRANE, INDIANA

DRAWN BY S. F. PROSSER
TRACED BY W. B. LEGAT
CHECKED BY E. L. BOSTIC
ELEC. DESIGN BY S. C. BOLLIVER
P.W. DESIGN P. W. BOLSTER

DE LEUW, CATHER & COMPANY
CONSULTING ENGINEERS
100 N. WACKER DRIVE
CHICAGO, ILLINOIS

PLOT PLAN
MINE FILLING AREA "A"
ELECTRICAL, TELEPHONE, FIRE ALARM, WATER & SANITARY SEWER

APPROVED: [signature] DATE 9/24/53

APPROVED FOR BUREAU OF YARDS & DOCKS
[signature]
APPD FOR CHIEF OF BUREAU
DATE 2-1-54

SCALE 1" = 50'
SHEET 3 OF 4
NOY 73 927
T&D DRAWING NO. 571933

APPENDIX D

STANDARD OPERATING PROCEDURES

1.0 PURPOSE

This procedure describes the methods which will be used to establish field measurement locations; and measure the temperature, moisture content, pH, and oxygen level of windrowed soil. Quality assurance requirements for field measurements are described in Appendix F ~~to the~~ **of this** Pilot Scale Operational Plan.

2.0 ESTABLISH SAMPLING AND MONITORING LOCATIONS

This section describes the procedure to be followed for establishing the field measurement locations.

2.1 Tools and Materials

The following tools and materials are required to establish field measurement locations:

measuring tape (50-foot minimum)
dedicated 4 ft 7 in.-long measuring stick marked with six-inch intervals
dedicated pin flags or stakes
field logbook
indelible pen

2.2 Establish Field Measurement Locations

Cross-section Locations

Each windrow will be divided into four cross-sections, labeled A through D as shown in Figure 1-1 **and Figure 1-1A,** of this SOP. Cross-section locations will be measured and marked after each time the windrow is turned. The following procedure will be used to establish cross-section locations:

1. Locate cross-section A by measuring a distance of 5 feet from the east end of the windrow along the long axis. Place a pin flag or stake on top of the pile at this location.

NOTE: ALL SAMPLE NUMBERS FOLLOWED BY AN "A" WILL BE TAKEN AT 1' BELOW THE SURFACE.

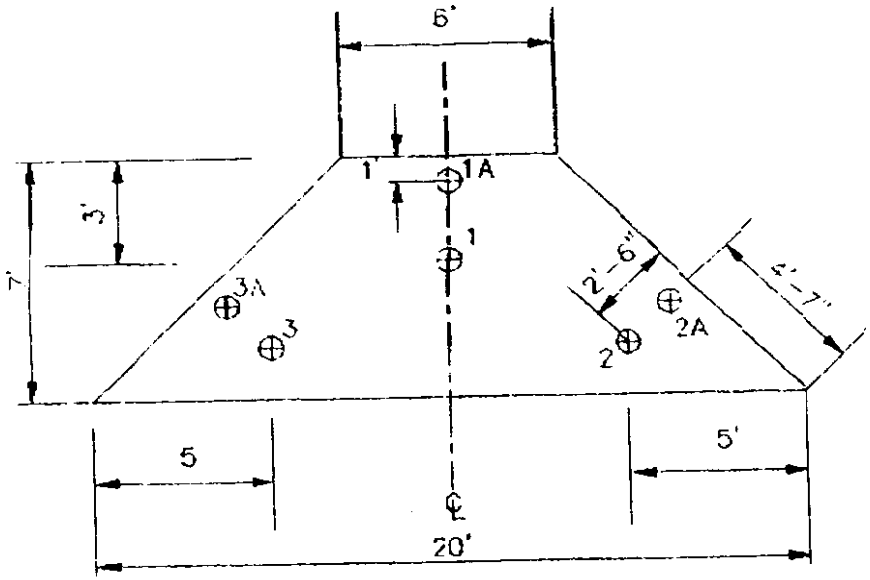

SECTION A-A

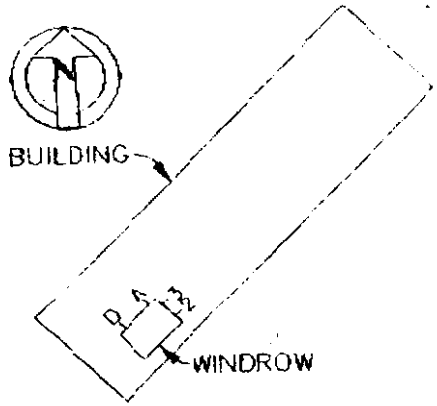

KEY PLAN

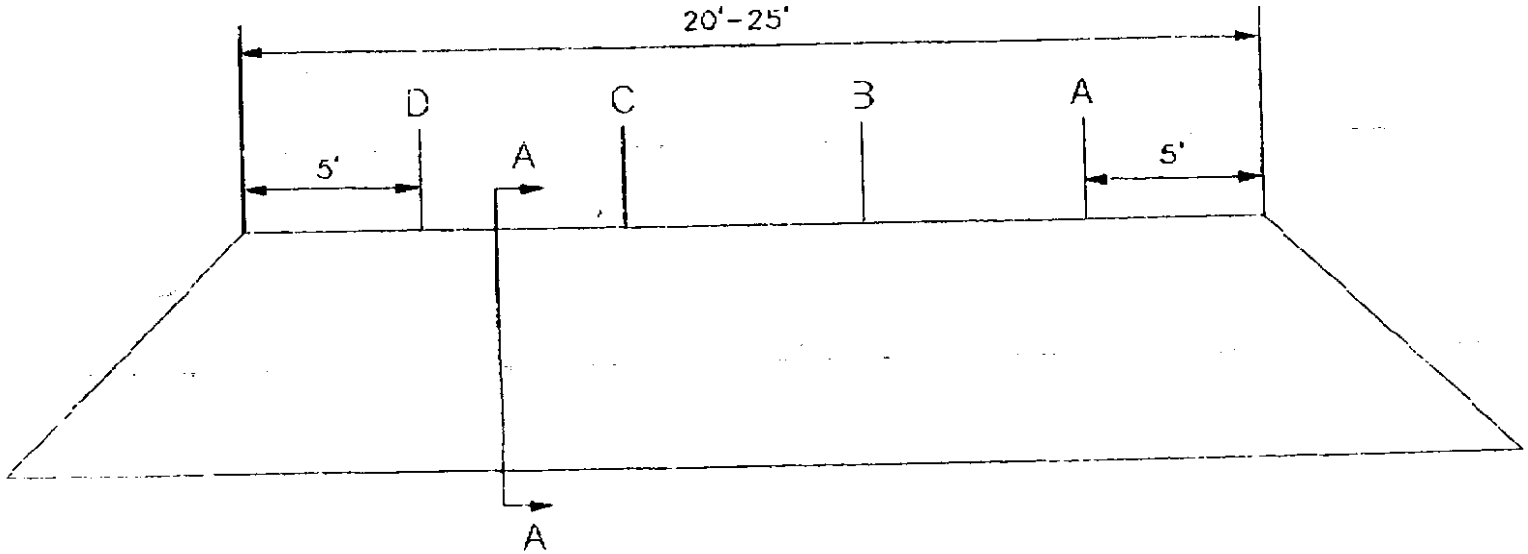

PILOT SCALE
WINDROW SAMPLE LOCATIONS

MORRISON KNUDSEN CORP			
Drawing	FIGURE 1-1A	Rev.	3
Date	5/16	Sheet	1

DRAWING NAME: F:\JOYSER\GRAVEL\MOSAIC.DWG

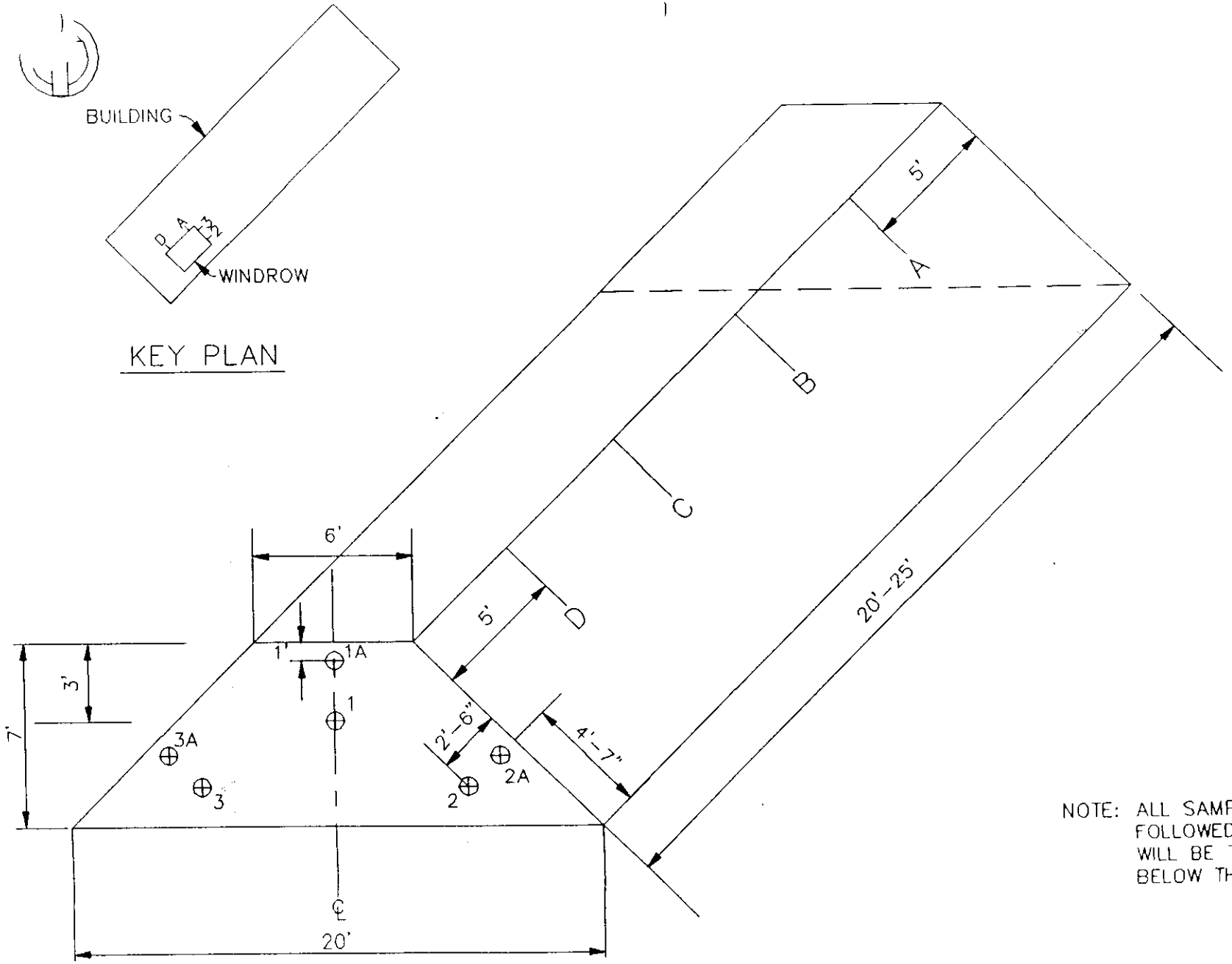

NOTE: ALL SAMPLE NUMBERS FOLLOWED BY AN "A" WILL BE TAKEN AT 1' BELOW THE SURFACE.

PILOT SCALE
WINDROW SAMPLE LOCATIONS

MORRISON KNUDSEN CORP	
Drawing FIGURE 1-1	Rev 2
Date 4/11/97	Sheet 1

2. Locate cross-section D by measuring a distance of 5 feet from the west end of the windrow along the long axis. Place a pin flag or stake on top of the pile at this location.

3. Measure the distance between the marker at cross-section A and the marker at cross-section D. Document the measurement in the field logbook along with date, time, and windrow number. Divide the measured length by three. Take the resulting value and measure that distance (to the nearest 6 inches) from cross-section A towards the center of the pile along the long axis. This is the location of cross-section B. Place a pin flag or stake on top of the pile at this location. Locate cross-section C between cross-sections B and D, an equal distance from both. Place a pin flag or stake on top of the pile at this location.

4. Double check the measurements by making sure the distances between cross-sections A and B, B and C, and C and D are all equal within ±3 inches; and cross-sections A and D are each located 5 feet from the ends of the windrow.

Field measurement locations

Six field measurement locations will be established at each of the four cross-sections. The correct depth for each measurement will be indicated by marked intervals on the shaft of the oxygen/temperature probe for oxygen and temperature measurements, or by inserting the marked measuring stick to the appropriate depth for moisture level and pH ~~measurements~~ **samples**. The following procedure will be used to locate the field measurement locations:

1. Sample location 1A is located on the longitudinal centerline of the pile at a depth of 1 foot below the top surface. Depending on the measurement to be made, insert the marked probe shaft or measuring stick to the 1-foot mark.

2. Sample location 1 is located on the longitudinal centerline of the pile at a depth of 3 feet below the top surface. Depending on the measurement to be made, insert the marked probe shaft or measuring stick to the 3-foot mark.

3. Sample location 2A is located on the south side of the pile at a depth of 1 foot below the surface. Lay the 4 ft 7 in. measuring stick on the south side of the pile from the ground surface up, and mark the point on the pile at the end of the stick. Depending on the measurement to be made, hold the marked probe shaft or measuring stick perpendicular to the side of the pile and insert to the 1-foot mark.

4. Sample location 2 is located on the south side of the pile at a depth of 2.5 feet below the surface. Lay the 4 ft 7 in. measuring stick on the south side of the pile from the ground surface up, and mark the point on the pile at the end of the stick. Depending on the measurement to be made, hold the marked probe shaft or measuring stick perpendicular to the side of the pile and insert to the 2.5-foot mark.

5. Sample location 3A is located on the north side of the pile at a depth of 1 foot below the surface. Lay the 4 ft 7 in. measuring stick on the north side of the pile from the ground surface up, and mark the point on the pile at the end of the stick. Depending on the measurement to be made, hold the marked probe shaft or measuring stick perpendicular to the side of the pile and insert to the 1-foot mark.

6. Sample location 3 is located on the north side of the pile at a depth of 2.5 feet below the surface. Lay the 4 ft 7 in. measuring stick on the north side of the pile from the ground surface up, and mark the point on the pile at the end of the stick. Depending on the measurement to be made, hold the marked probe shaft or measuring stick perpendicular to the side of the pile and insert to the 2.5-foot mark.

3.0 OXYGEN AND TEMPERATURE MONITORING

This section describes the procedure to be followed for collecting oxygen and temperature measurements within the compost windrows. **Procedures for decontamination of monitoring and sampling equipment are described in Field SOP 3.0 in this Appendix.**

3.1 Tools and Materials

The following tools and materials are required to collect oxygen and temperature measurements:

primary instrument - Demista Instruments Model OT-21 oxygen-temperature monitor
backup instrument (temperature only) - K-type thermocouple with hand-held temperature meter
4 ft 7 in.-long measuring stick marked with six-inch intervals
field logbook
indelible pen

3.2 Calibration

Demista Oxygen-Temperature Monitor

The Demista oxygen-temperature monitor can be calibrated only for percent oxygen. **Temperature calibration shall be performed at the instrument manufacturer's facility. The recommended calibration frequency is minimum once every 6 months based on daily use.**

Oxygen calibration is performed by activating the 'oxygen' mode, aspirating (squeezing and releasing the rubber bulb) several times, and noting the display reading. If the reading is other than 21%, the monitor is adjusted to '21' by turning the oxygen calibration screw with a small screwdriver. Calibration shall be documented in the field logbook.

K-type Thermocouple

~~There is no calibration procedure for the K-type thermocouple.~~

Calibration shall be performed at the instrument manufacturer's facility. The recommended calibration frequency is minimum once every 6 months based on daily use.

3.3 Measurement Procedure

The samples will be taken in the following order:

1. **In-situ reading of Oxygen.**
2. **In-situ reading of Temperature.**
3. **Sample withdrawn for on-site laboratory analysis of moisture and pH (Three times per week).**
4. **Sample withdrawn for off-site laboratory analysis (Days 0, 5, 10, 20, 30, 40, and 60).**

Oxygen measurements shall be collected prior to temperature measurements at all six monitoring locations at each cross-section **and shall be done prior to any samples being removed**. The following procedure shall be used to collect oxygen and temperature measurements with the Demista oxygen-temperature monitor:

1. Oxygen measurements shall not be collected prior to one hour following turning of the windrow.

2. Prior to the first reading of the day, calibrate the oxygen/temperature probe as described in Section 3.2 above. **Measurements will be taken in a sequence of Locations 1A, 1, 2A, 2, 3A, and then 3.**

3. Insert the oxygen/temperature probe into the pile at each of the six locations at the four cross-sections described in Section 2.2 above. Oxygen measurements should always be made by inserting the probe into an undisturbed location so that the measurements are representative of the settled material, and not biased by void spaces or channels to the pile surface.

4. Activate the "oxygen" mode by pressing down the rear portion 'O' of the control switch on the monitor.

5. Aspirate 4-6 times, or until the reading stabilizes. Record the oxygen measurement in the field logbook, including date, time, and sample identification.

6. Aspirate 2 - 4 times. Activate temperature mode**, wait for reading to stabilize, and then** record the temperature measurement in the field logbook.

7. **Decontamination shall occur according to Field SOP 3.0 in this Appendix, at the end of measuring each cross-section and windrow.**

Temperature Monitoring with the Thermocouple Probe and Temperature Meter

In the event that the Demista oxygen-temperature probe is not functional, temperature measurements shall be collected using the thermocouple probe and temperature meter. There is no backup method for measuring oxygen level. The following procedure will be used to collect temperature measurements using the thermocouple probe:

1. Connect the probe to the P1 connector on the temperature meter.

2. Press the C key for °C readout. The legend on the LCD display will indicate °C.

3. Press the MODE key for the meter to display the temperature of P1.

4. Press the RESET key to clear the internal memory.

5. Insert the probe to the appropriate depth for each of the six sample locations at each of the four cross-sections for the windrow being measured, as described in Section 2.2 above. Press and hold the MIN/MAX key until the reading stabilizes. The display will alternate between the minimum and maximum reading from the time after the instrument is RESET. The legend on the LCD will indicate MIN and MAX with the readings.

6. Record the date, time, sample identification, and temperature meter MIN/MAX values in the field logbook. Calculate the average temperature meter measurement by adding the MIN and MAX values and dividing by 2.

4.0 MOISTURE LEVEL MONITORING

This section describes the procedure to be followed for collecting moisture level monitoring measurements.

4.1 Tools and Materials

The following tools and materials are required to collect moisture level measurements:

~~hand auger~~
stainless steel push tubes with sleeves or split spoon
measuring tape
dedicated 4 ft 7 in.-long measuring stick marked with six-inch intervals
stainless steel bowls (4 per windrow)
stainless steel spoons (4 per windrow)
sealable **disposable** plastic bags
~~microwave oven~~
drying oven
desiccator
furnace
tongs
~~disposable plastic weigh boats~~
weigh boats (glass)
crucibles
analytical balance (+/- 0.001)
~~scale~~
squeeze bottle with distilled water
paper towels
sample tags (see approved Pilot Scale QAPP)
sample labels (see approved Pilot Scale QAPP)
tape
transporting device from buildings to the on-site lab
field logbook
indelible pen

4.2 Calibration

The scale shall be calibrated once per week using standard weights in accordance with the manufacturer's Instruction Manual. Calibration shall be documented in the field logbook.

4.3 Sample Collection

Samples for moisture level monitoring will be collected three times per week following oxygen/temperature measurement collection. If water is added to the windrow during turning, moisture level measurements will also be collected no sooner than 1 hour after moisture is added and the windrow is turned. Moisture level samples shall be collected as quickly as possible to minimize moisture loss prior to analysis. Moisture level sub-samples will be collected from locations 1, 2, and 3 at each cross-section, using a ~~hand auger~~ **push tube**. The three sub-samples will then be composited to form one sample for each cross-section. The following procedure shall be used to collect moisture level monitoring samples at each cross-section:

1. Use the measuring tape and measuring stick to locate cross-sections A through D, and sample locations 1, 2, and 3 at each cross-section, as described in Section 2.2 above.

2. Insert the ~~auger~~ **push tube** into and perpendicular to the pile at each sample location. **Push the tube to the designated depth (3 feet for sample location 1, and 2.5 feet for sample locations 2 and 3) or a little deeper to insure a complete sample at that depth.** ~~Remove the material between the surface and the designated depth at each sampling location, placing the removed material on top of the pile and next to the cross-section location, until the auger has reached the designated depth (3 ft for sample location 1, and 2.5 feet for sample locations 2 and 3).~~

3. ~~Fill the auger with the material at the designated sampling depth.~~ Remove the ~~auger from the borehole,~~ **push tube and** extract the material from the ~~auger~~ **tube from the appropriate depth location (i.e., the bottom portion of the tube),** and place into a **designated** stainless steel bowl **with a stainless steel spoon or scoop**. Combine in the bowl the material from sample locations 1, 2, and 3 at a single cross-section.

4. Thoroughly mix the material in the bowl with a stainless steel spoon, then place the composited sample into a re-sealable plastic bag **pre-labeled with the windrow number and the cross-section letter. Tape a tag identifying the** ~~labeled with the~~ sample identification number, **date, time, sampler's name, windrow number and cross-section letter, to the bag.**

5. A **new** decontaminated **stainless steel** bowl and **stainless steel** spoon, and new **disposable** re-sealable plastic bag **with labels and tags**, shall be used for each cross-section.

6. **Sample tags shall be retained in the field office files as evidence once filed lab measurements are finished.**

4.4 Measurement Procedure

The following procedure will be used to obtain the parameters for calculating moisture levels for each cross-section composite sample. All weights shall be recorded in the field logbook. Weights shall be reported to the tenth of a gram.

1. For each cross-section sample, weigh and label a ~~plastic~~ weigh boat **or crucible** with the sample identification number. Record this as tare weight, T1.

~~2. Place approximately 25 grams of the cross-section sample into the labeled weigh boat **or crucible**, weigh, and record the sample weight, W1. Reserve the remainder of the sample in the plastic bag for pH measurement, if scheduled for that day.~~

~~3. Remove the sample and weigh boat **or crucible** from the scale. Slowly wet the sample with distilled water from the squeeze bottle until the sample is saturated and water begins to run off into the weigh boat **or crucible**. Carefully pour off the excess water or absorb it with a paper towel without removing any of the solid material.~~

~~4. Re-weigh the sample and weigh boat **or crucible** and record this as the saturated weight, S1.~~

~~5. Place the sample and weigh boat in the microwave oven and heat on "high" for 20 minutes.~~

~~6. After 20 minutes of drying time, remove the sample and weigh boat from the microwave and re-weigh. Record this weight as the dry weight, D1.~~

2. **Place a 10-15 gram sample in the tared weigh boat and record the gross wet weight.**

3. **Dry sample in oven at 105 - 110 degrees C for 24 hours or until a constant weight is reached.**

4. **Place dried sample in dessicator for 20 minutes, and then record the gross dry weight of the sample plus weigh boat. (Weigh weigh boat first, or tare weigh boat prior to adding dreid sample.)**

5. Collect all used sample material from a single pile **(windrow), after the moisture and pH measurements have been finished,** and place in a **disposable** sealable plastic bag **labeled** for disposal **back** on**to** that **same** pile **where the sample came from**. Do not mix samples from different piles **(windrows)**.

6. **Dispose of clean soil bags as solid waste. Dispose of contaminated soil bags as contaminated, according to U.S. Navy EPD procedures.**

4.5 Calculations

The following calculation shall be performed:

% Moisture of Original Wet Sample = (#2 - #4) divided by #2 times (100)

Calculation sheets shall be maintained in the field laboratory.

~~The following parameters shall be calculated for each cross-section sample using the recorded data:~~

Parameter	Symbol	Formula	Result
~~Mass of water lost from original compost sample during drying~~	M_{W1}	~~W1 - D1~~	M_{W1} = _____ grams
~~Mass of water added to original compost sample to obtain saturation~~	M_{S1}	~~S1 - W1~~	M_{S1} = _____ grams
~~Percent moisture (original compost sample)~~	PM	$\frac{M_{W1}}{(W1-T1)} \times 100$	PM = _____ %
~~Percent moisture (at saturation)~~	PMS	$\frac{(M_{W1} + M_{S1})}{(S1-T1)} \times 100$	PMS = _____ %
~~Percent saturated~~	PS	~~(PM/PMS) x 100~~	PS = _____ %

5.0 pH MONITORING

This section describes the procedure to be followed for collecting pH measurements.

5.1 Tools and Materials Required

The following tools and materials are required to collect ~~moisture~~ **pH** level measurements:

250 ml glass beaker
100 ml graduated cylinder
stir rod
scale
Hach EC10 portable pH meter
distilled water
field logbook
indelible pen

5.2 Calibration

The pH meter shall be calibrated prior to use in accordance with the manufacturer's Instruction Manual. Calibration shall be documented in the field logbook.

5.3 Sample Collection

pH measurements shall be made on the composite sample material from each cross-section which remains after the moisture level sample portion has been removed from the **disposable** plastic bag. If it is necessary to collect a separate sample for pH monitoring, the sample locations shall be established as described in Section 2.2 above, and sample material shall be collected with a ~~hand auger~~ **push tube** as described in Section 4.3. **A new sample bag, tag, and label must then be used.**

5.4 Measurement Procedure

The following procedure will be used to measure pH for each cross-section composite sample. All measurements shall be recorded in the field logbook. Weights shall be reported to the tenth of a gram. pH measurements shall be recorded to the tenth of a pH unit.

1. For each cross-section sample, weigh and label a 250 ml glass beaker with the sample identification number. Record this as tare weight, T1.

2. Place approximately 10 grams of the remainder of the cross-section sample into the labeled beaker, weigh, and record the sample weight, W1.

3. Remove the sample and beaker from the scale. Measure 50 ml distilled water in the graduated cylinder and add the water to the sample in the beaker.

4. Stir the sample material and distilled water in the beaker with the stir rod for 15 seconds. ~~Repeat stirring for 15 seconds every 10 minutes for 30 minutes. This will add up to 4 stirring periods: at time 0, 10 minutes, 20 minutes, and 30 minutes.~~

5. Allow the sample to sit for one hour to allow the solids to settle.

6. Immerse the pH electrode in the liquid portion in the beaker. Do not allow the electrode to rest on the bottom of the beaker, but keep the electrode above the solid layer.

7. Allow the reading on the pH meter to stabilize, then record the pH value in the field logbook.

5.5 DECONTAMINATION

Decontaminate the sampling equipment at the end of sampling each windrow. All sampling equipment must be decontaminated or dedicated and disposable for each windrow sampling event Procedures are identified in Field SOP 3.0 of this appendix.

1.0 PURPOSE

This procedure describes the methods which will be used to establish sampling locations and collect compost samples for off-site laboratory analysis. Sampling requirements for on-site monitoring and collection are described in Field SOP 1.0 of this appendix.

2.0 ESTABLISH SAMPLING AND MONITORING LOCATIONS

This section describes the procedure to be followed for establishing the locations for collecting samples for off-site laboratory analyses. Field measurement locations are described in Field SOP 1.0.

2.1 Tools and Materials

The following tools and materials are required to establish sampling locations:

measuring tape (50-foot minimum)
dedicated 4 ft 7 in.-long measuring stick marked with 6-inch intervals
dedicated pin flags or stakes
field logbook
indelible pen

2.2 Establish Sample Locations

Cross-section Locations
Each windrow will be divided into four cross-sections, labeled A through D as shown in Figure 1-1 **and Figure 1-1A,** of this SOP. Cross-section locations will be measured and marked after each time the windrow is turned. The following procedure will be used to establish cross-section locations:

1. Locate cross-section A by measuring a distance of 5 feet from the east end of the windrow along the long axis. Place a pin flag or stake on top of the pile at this location.

2. Locate cross-section D by measuring a distance of 5 feet from the west end of the windrow along the long axis. Place a pin flag or stake on top of the pile at this location.

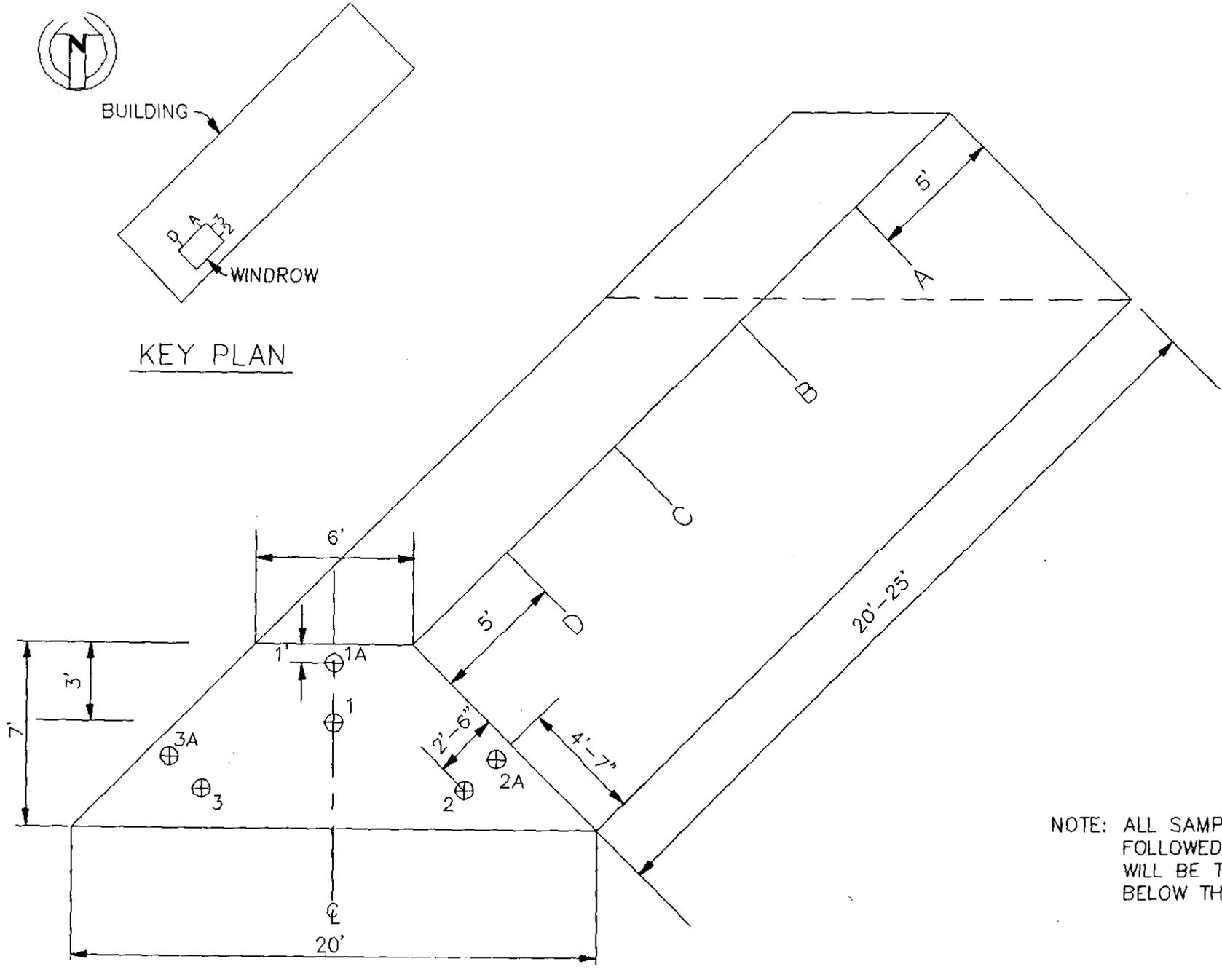

NOTE: ALL SAMPLE NUMBERS FOLLOWED BY AN "A" WILL BE TAKEN AT 1' BELOW THE SURFACE.

PILOT SCALE
WINDROW SAMPLE LOCATIONS

MORRISON KNUDSEN CORP.	
Drawing FIGUR	Rev. 2
Date 4/11,	Sheet 1

3. Measure the distance between the marker at cross-section A and the marker at cross-section D. Document the measurement in the field logbook along with date, time, and windrow number. Divide the measured length by three. Take the resulting value and measure that distance (to the nearest 6 inches) from cross-section A towards the center of the pile along the long axis. This is the location of cross-section B. Place a pin flag or stake on top of the pile at this location. Locate cross-section C between cross-sections B and D, an equal distance from both. Place a pin flag or stake on top of the pile at this location.

4. Double check the measurements by making sure the distances between cross-sections A and B, B and C, and C and D are all equal within ± 3 inches; and cross-sections A and D are each located 5 feet from the ends of the windrow.

Sample locations

~~Six~~ **Three** sample locations will be established at each of the four cross-sections. **The samples will be taken in the following order:**

1. **In-situ reading of Oxygen.**
2. **In-situ reading of Temperature.**
3. **Sample withdrawn for on-site laboratory analysis of moisture and pH.**
4. **Sample withdrawn for off-site laboratory analysis.**

The following procedure will be used to locate the sample locations:

1. Sample location 1 is located on the longitudinal centerline of the pile at a depth of 3 feet below the top surface. Hold the marked measuring stick perpendicular to the top of the pile and insert to the 3-foot mark.

2. Sample location 2 is located on the south side of the pile at a depth of 2.5 feet perpendicular to the surface. Lay the 4 ft 7 in. measuring stick on the south side of the pile from the ground surface up, and mark the point on the pile at the end of the stick. Then hold the measuring stick perpendicular to the side of the pile and insert to the 2.5-foot mark.

3. Sample location 3 is located on the north side of the pile at a depth of 2.5 feet below the surface. Lay the 4 ft 7 in. measuring stick on the north side of the pile from the ground surface up, and mark the point on the pile at the end of the stick. Then hold the measuring stick perpendicular to the side of the pile and insert to the 2.5-foot mark.

3.0 Sample Collection

This section describes the procedure to be followed for collecting sample material from the compost windrows for off-site laboratory analyses.

3.1 Tools and Materials

~~hand auger~~
stainless steel push tubes with sleeves or split spoon
measuring tape
dedicated 4 ft 7 in.-long measuring stick marked with six-inch intervals
stainless steel bowls
stainless steel spoons
appropriate sample containers (see Section 4.0 of the approved Pilot Scale QAPP)
field logbook
indelible pen
sample tags
sample labels
tape
coolers
preservatives
chain of custody forms
plastic bags for placing sample containers in

All sample extraction tools which come in contact with the sample shall be decontaminated prior to use as described in Field SOP 3.0.

3.2 Sample Collection Procedure

Samples for off-site laboratory analysis will be discrete as described in Section 4.0 of the approved Pilot Scale QAPP. Discrete samples will be collected from locations 1, 2, and 3 at each cross-section, using a hand auger. Table 1-1 shows the Process Parameter Sampling and Analysis Schedule for the compost material. The following procedure shall be used to collect discrete samples at each cross-section:

1. Use the measuring tape and measuring stick to locate cross-sections A through D, and sample locations 1, 2, and 3 at each cross-section, as described in Section 2.2 above.

2. Insert the ~~auger~~ **push tube** into and perpendicular to the pile at each sample location. **Push the tube to the designated depth (3 feet for sample location 1, and 2.5 feet for sample locations 2 and 3) or a little deeper to insure a complete sample at that depth.** ~~Remove the material between the surface and the designated depth at each sampling location, placing the removed material on top of the pile and next to the cross-section location, until the auger has reached the designated depth (3 ft for sample location 1, and 2.5 feet for sample locations 2 and 3).~~

3. ~~Fill the auger with the material at the designated sampling depth.~~ Remove the ~~auger from the borehole~~ **push tube** and extract the material from the ~~auger~~ **tube from the appropriate depth location**. Place the extracted material directly into the appropriate sample container **using a stainless steel spoon or scoop**.

4. Follow the sample **labeling, tagging,** identification, chain of custody, and shipping and handling procedures described in Section 4.0 of the approved Pilot Scale QAPP. Document all sampling activities in the field logbook.

5. Place **placing the remaining sample on top of the pile and next to the cross-section location.**

6.. A decontaminated bowl and spoon, and new sample containers shall be used for each sample location for discrete samples. Decontamination procedures are described in Field SOP 3.0.

TABLE 1-1
PROCESS PARAMETER SAMPLING AND ANALYSIS SCHEDULE[1]

Matrix	Parameter	Frequency	Req. Volume per sample	Method
1. Windrow compost	Explosives Per Table 8-2 of Pilot Scale Operational Plan	1 sample per locations 1, 2, & 3 per cross-section: Day ~~0, 7, 14, 21, 28~~ **0, 5, 10, 20, 30, 40, 60**	8 ounces	Laboratory (SW846 8330)
2. Windrow compost	TCLP Metals	1 sample per locations 1, 2, & 3 per cross-section: Day ~~0 & 28~~ **0 and 60**	8 ounces	Laboratory (SW 846 6010, 1311, & 7470)
3. Windrow compost	Total metals of barium, cadmium, chromium, & lead	1 sample per locations 1, 2, & 3 per cross-section: Day ~~0 & 28~~ **0 and 60**	8 ounces	Laboratory (SW 846 6010)
4. Windrow compost	TOC	1 sample per locations 1, 2, & 3 per cross-section: Day ~~0, 7, 14, 21, 28~~ **0, 5, 10, 20, 30, 40, 60**	8 ounces (both analyses may be performed using total 8 ounces of soil)	Laboratory (EPA 9060)
5. Windrow compost	TKN	1 sample per locations 1, 2, & 3 per cross-section: Day ~~0, 7, 14, 21, 28~~ **0, 5, 10, 20, 30, 40, 60**		Laboratory (EPA 351.3)

Notes:
1. Complete sampling and analysis procedures and details for the performance parameters are provided in the **approved** Biofacility Pilot Scale QAPP.

4.0 Decontamination Water and Storm Water Retention Pond Sampling

Decontamination water generated from the cleaning of sampling equipment and reusable personal protective equipment (PPE) will be collected and stored in portable temporary storage tanks or 55 gallon drums. Accumulated storm water and surface runoff will be collected in two retention ponds.

4.1 Tools and Materials

disposable Teflon or polyethylene **bottom filling** bailer
appropriate sample containers (see Section 4.0 of the approved Pilot Scale QAPP)
appropriate chain-of-custody, labels, tags, etc. (See approved Pilot Scale QAPP)
sampling scoop or jar on a long stick (type used for surface water sampling)
field logbook
indelible pen

4.2 Sample Collection

Decontamination Water
The following procedure shall be used to collect samples of decontamination water:

1. Slowly lower the disposable Teflon or polyethylene **bottom-filling** bailer beneath the water surface until full.

2. Retrieve the bailer and fill the appropriate sample containers. Vials for volatile organics analysis (VOA) will be filled first. **Avoid creating volatilization of the sample while transferring.** Fill each VOA vile so that a meniscus is formed at the surface, and there are no air bubbles and no free headspace. Then tightly cap and invert each container. Fill the appropriate sample containers for other analyses to be performed, and described in Section 4.0 of the approved Pilot Scale QAPP.

3. Follow the sample **labeling, tagging and** identification, chain of custody, and shipping and handling procedures described in Section 4.0 of the approved Pilot Scale QAPP. Document all sampling activities in the field logbook.

Storm/run-off Water

The same procedure described above for collecting samples from decontamination water will be used to collect samples of storm water and run-off water **in the retention ponds**. If the water level in the retention ponds is too low to sample using a **bottom-filling** bailer, then **a sampling device on a stick or rod** ~~sample containers~~ will be filled ~~directly~~ by submerging in the water. ~~In this case, care shall be taken so that any preservative in the sample containers is not lost.~~ **The sample shall be transferred to the appropriate sampling container. At no time will the sampler enter the retention ponds.**

1.0 PURPOSE

This procedure describes the methods which will be used to decontaminate large equipment, sampling equipment, and personnel.

2.0 SCOPE

This procedure applies to the Naval Surface Warfare Center, Crane, Indiana site for biofacility pilot scale operations.

3.0 PROCEDURE

3.1 Equipment Decontamination At The Bioremediation Facility

Large equipment such as mixers, conveyors, trucks, and equipment used within the Bioremediation Facility to create or turn the windrows will be decontaminated in a designated decontamination facility as described in Section 5.0 of ~~the~~ **this** Operational Plan. Prior to exiting the facility, all loose dirt will be swept or brushed off the exterior of the equipment. The equipment will then be cleaned using a high-pressure, low volume water spray system. This system consists of a hand held wand connected to an overhead high-pressure supply line. All surfaces of the equipment which ~~has~~ **have** come into contact with potentially contaminated material will be cleaned with this system and visually inspected.

The decontamination activity will begin at the highest point of the affected equipment with the decontamination spray being formed in a downward motion. This will allow the upper portions of the equipment to remain clean as the lower portions are being rinsed. Truck beds and loader buckets will be slightly tilted to obtain a sloped surface for an effective washout motion. After cleaning the vehicle or equipment body, the wheel wells, under carriage (if necessary), and tires will be the washed. The equipment will be visually inspected. If evidence of soil remains on the equipment, recleaning will be performed until no visual signs of soil remain. Trucks used for transporting excavated soil are only required to have the truck wheel wells and potentially contaminated exteriors cleaned prior to exiting the Bioremediation Facility and returning for another load

of soil. Complete decontamination of the truck's potentially contaminated surfaces will be performed at the Bioremediation Facility upon completion of excavation and soil transport.

Exceptionally large equipment such as the windrow turner and the center-pivot wheel loader, will be decontaminated in the compost building upon completion of the Pilot Scale Operation. The equipment will be cleaned using the high-pressure portable spray unit described in Section 3.2. The equipment will be cleaned using the same procedure as described above. All decontamination fluids will be collected in the building sump.

3.2 Equipment Decontamination At The Excavation Site

Equipment such as conveyors, backhoe, soil screener, and smaller equipment used within the exclusion zone will be decontaminated in a designated temporary decontamination facility as described in the Soil Excavation Plan found in Appendix E of this Operational Plan. Prior to exiting the EZ, all equipment will pass through the CRZ for decontamination. All loose dirt will be swept or brushed off the exterior and interior of the equipment. The equipment will then be cleaned using a high-pressure, low volume water spray system in the temporary decontamination facility. This system consists of a hand held wand connected to a portable, gas-powered high-pressure pump unit. Trucks used for transporting excavated soil are only required to have the truck wheel wells and potentially contaminated exteriors cleaned prior to exiting the CRZ. Complete decontamination of the truck's potentially contaminated surfaces will be performed at the Bioremediation Facility upon completion of excavation and soil transport.

The decontamination activity will begin at the highest point of the affected equipment with the decontamination spray being formed in a downward motion. This will allow the upper portions of the equipment to remain clean as the lower portions are being rinsed. After cleaning the vehicle or equipment body, the wheel wells, under carriage (if necessary), and tires will be ~~the~~ washed. The equipment will be visually inspected. If evidence of soil remains on the equipment, recleaning will be performed until no visual signs of soil remain on the equipment exterior.

3.3 Sample Equipment, Compost Sampling Probes, And On-site Laboratory Equipment Decontamination

3.3.1 Sample Equipment and On-site Laboratory Equipment

Disposable Equipment

Dedicated disposal, one-time use, equipment used for sampling water, soil, sediment, air, or compost media shall be segregated and disposed of as solid or special waste according to U.S. Navy EPD procedures. The sampling person must take appropriate measures to prevent any cross-contamination with other equipment or structures.

Non-Disposable Equipment

All non-disposable sampling equipment will be decontaminated according to the following procedure and sequence**, all decontamination equipment will be dedicated and plastic sheeting will be placed under the decontamination area**:

1. Place **the** equipment in a bucket or tub **for brushing and an Alconox water solution rinse**. **First, brush the equipment of as much solids as possible. Then, rinse the equipment using brushes and clean, unused garden sprayers** containing a solution of Alconox and tap water; wash equipment ~~using brushes~~ **thoroughly** being sure to reach both the inside and outside surfaces.

2. Rinse **the** equipment ~~in~~ **over** another bucket or tub ~~with~~ **for a** potable water **rinse**; the rinse can be performed using **clean, unused** garden sprayers, spray bottles, or squeeze bottles.

3. If analysis of the material includes metals, **Day 0 and Day 60 sampling dates**, then rinse **the** equipment with a solution of 10% nitric acid ~~in the same~~ **over a dedicated** bucket or tub ~~that contains the potable water rinse~~; **the equipment should then be rinsed with potable water over the same bucket or tub.** The acid ~~can~~ **will** be contained in **small** spray or squeeze bottles; the nitric acid solution can be obtained from the laboratory. After the acid rinse, proceed to Step 4.

   If analysis of the material does not include metals, proceed to the next step.

4. Rinse **the** equipment with **laboratory** reagent grade water ~~in~~ **over another bucket.** ~~the bucket or tub that contains the potable water/acid;~~ This rinse can be performed using spray or squeeze bottles; the reagent grade water will be supplied by the laboratory.

~~5. If analysis of the material includes organics, then rinse equipment with isopropanol in a third bucket or tub; this rinse can be performed using spray or squeeze bottles; the isopropanol will be supplied by the laboratory; if analysis of the material does not include organics, proceed to the next step~~

~~6. Rinse equipment with reagent grade water in the bucket or tub that contains the isopropanol; this rinse can be performed using spray or squeeze bottles~~

5. **Allow the equipment to air dry and s**tore **the** equipment in labeled plastic bags to prevent contamination after decontaminating.

Cleaning of on-site laboratory non-disposable equipment will be performed as described above except emersion in the decontamination fluids may not be permissible. Spray bottles of cleaning and rinse fluids will be used. **All decontamination liquids shall be managed according to U.S. Navy EPD procedures.**

3.3.2 Compost Sampling Probe Equipment

1. **Brush or wipe (using disposable paper towels) the probe between sampling cross-section locations for a given pile (windrow). Any soils/compost removed shall be placed back onto that pile (windrow).**

2. **Prior to the probe being used on the next compost pile (windrow), the following decontamination procedures must be followed:**

   a. **Remove the Teflon tip from the probe by loosening the screw and sliding out the tip.**

   b. **Using a plastic awl poke out any material clogging the oxygen holes.**

   c. **Wet a paper towel with potable water and wipe the exterior of the probe.**

   d. **Wet a second paper towel with a Alconox soap water solution and wipe the exterior of the probe.**

   e. **Wet a third paper towel with laboratory Reagent grade water and wipe the exterior of the probe.**

   f. **Dry with a fourth dry paper towel any excess water from the probe.**

g. Replace the probe tip after making sure it has been cleaned also and secure in place with the screw.

h. After the last use for the day and the equipment has been decontaminated, store the equipment in labeled plastic bags to prevent contamination after decontaminating.

3.3.3 Measuring Equipment

All measuring sticks will be dedicated to each individual windrow. The sticks will have any solids brushed off at the end of measurements for that windrow. Any solid residues shall be placed onto that windrow. The measuring sticks shall be stored adjacent to the windrows, next to the containment wall of the building.

The sticks shall be stored in plastic at the end of the Pilot Scale Test for disposal determination by the U.S. Navy EPD Representative.

3.4 Personnel Decontamination At The Bioremediation Facility

The Bioremediation Facility personnel decontamination area consists of a shower/locker room trailer with a change room area, lockers, lavatory, toilets and showers as described in Section 5.0 of this Operational Plan. Persons working within the Bioremediation Facility will operate in Level C PPE as described in the SSHP. Boot covers, Tyvek™ suits and disposable gloves will require no decontamination, and will be disposed of according to U.S. Navy EPD Procedures.

Respirators will be washed on at least a daily basis. The respirator will be placed in a bucket or tub containing soap and water. The respirator will then be rinsed in a solution of sanitizing agent and water in a separate bucket or tub. The respirator will then be placed in a designated clean area for drying.

3.5 Personnel Decontamination At The Excavation Site

Personnel will be required to pass through a decontamination area before exiting the EZ. The personnel decontamination area will be located in the CRZ adjacent to the EZ. The area will include, as required, a protective clothing removal area and container, respirator removal area and containers, storage for clean personnel protection equipment and clothing, and wash station supplies for hands and face.

All contaminated personal protective equipment and clothing shall be properly disposed of or cleaned and inspected for reuse.

3.6 Decontamination Of The Amendment Storage Area

At completion of the Pilot Scale Operation, the Bioremediation Facility Amendment Storage Area may require cleaning and decontamination to prevent storm water run-off of residual particulate, nitrates, and manures. All excess amendments remaining from Pilot Scale Operations shall be swept and removed from the Bioremediation Facility **according to U.S. Navy EPD requirements**. The amendment Storage Area surfaces will be cleaned of all visible signs of amendment material using the portable gas-powered high-pressure wash unit. Washing will begin with the storage bin walls and proceed from top to bottom. The asphalt surfaces will then be washed commencing with the northern most area working south so as to maintain wash water flow with the asphalt slope contour towards the Storm Water Collection and Retention Pond #2. All wash water and sediment will be collected in the Storm Water Collection and Retention Pond. Once the amendment storage area has been cleaned, the Storm Water Collection and Retention Pond fluid and sediment will be sampled for disposition as described in ~~the~~ **this** Operational Plan.

3.7 Decontamination Of The Compost Buildings And Larger Equipment

At completion of the Pilot Scale Operation, the Bioremediation Facility compost buildings **and larger equipment such as the compost turning machine,** will require cleaning and decontamination to prevent tracking of residual contaminants and amendments outside the area. All excess compost material remaining from Pilot Scale Operations shall be swept and removed from the

compost buildings. The building surfaces **and larger equipment** will be cleaned of all visible signs of compost material and dust using the portable gas-powered high-pressure wash unit. The decontamination process **of the buildings** will begin **after the equipment is clean and will start** at the interior roof surface and work downward from the steel members, to the metal siding interior, and down the concrete wall surface. The floor will then be high-pressure washed in the same manner proceeding from the higher elevations sloping to the fluid collection trench and building sump. All decontamination fluids and sediments will be collected in the building sump and sampled for analysis and disposal. Additional wall and floor final rinse samples will be analyzed to evaluate facility cleanliness. Additional cleaning of the buildings will be implemented as required based on rinsate sample results.

3.8 Decontamination Of The Truck Wash Facility

At the completion of the Pilot Scale Operation and once all equipment and vehicles have been decontaminated, the truck wash facility itself will be pressure washed and decontaminated. The decontamination will begin at the interior roof level and work downward from the top of the epoxy coated walls to the floor. The floor will then be high-pressure washed in the same manner proceeding from the higher elevations sloping to the fluid collection trench. All decontamination fluids and sediments will be collected in the truck wash facility sump and sampled for analysis and disposal. Additional cleaning of the wash facility will be implemented as required based on results of the rinsate sample analysis. The same procedure will be followed for the cleaning and sampling of the truck wash sump.

3.9 Decontamination of the Paved Surfaces

At the completion of the Pilot Scale Operation, all pavement shall be pressure rinsed and water shall be directed towards the retention ponds.

1.0 PURPOSE

This procedure describes the methods which will be used to combine and mix amendments in the proper proportions for pilot scale testing.

2.0 SCOPE

This procedure applies to the Naval Surface Warfare Center, Crane, Indiana site for Bioremediation Facility pilot scale operations.

3.0 EQUIPMENT

The following equipment will be used to combine and mix the compost amendments in the prescribed proportions for pilot scale testing:

3.1 Farm Tractor

The Farm Tractor is a John Deer model 7710. The tractor is used to power the grinder/mixer (PTO power) and to transport the grinder/mixer to and from the compost buildings.

3.2 Grinder/Mixer

The grinder/mixer is a Supreme model 700. The grinder/mixer is a 700 cubic foot capacity tub grinder commonly used in agricultural applications to blend and discharge livestock feed into feeding troughs. It has built in scales that provide a digital readout to the nearest ten pounds. It will be used to weigh amendments as they are being added to proportion the blend, and to chop and mix the amendment mixture.

3.3 Center Pivot Wheel Loader

The Center Pivot Wheel Loader is a Caterpillar model 966F. It is equipped with a 6.0 cubic yard bucket. This loader will be used to load amendments into the grinder/mixer.

4.0 SAFETY AND HEALTH PRECAUTIONS AND CONTROLS

1. Use Modified Level D PPE including disposable dust masks when off loading, grinding, and loading amendments.

   Add requirements for hearing protection here based on results of sound level surveys.

2. Maintain clear distance of approximately 15 feet and wear high visibility vest when working around moving machinery. Stay in equipment operators line-of-sight.

3. Ensure all rotating equipment guards are in place and functional prior to equipment operation.

4. Disengage power to the PTO when removing any remaining material from the grinder/mixer using a broom or brush. At no time should a person reach into the bin or enter the bin of the grinder/mixer unless the unit is disconnected from the PTO drive coupling.

5.0 PROCEDURE

Each pilot scale recipe will consist of 60 cubic yards of material, 45 cubic yards of which will be the amendment blend, the remaining 15 cubic yards will be the 25% soil loading. Figure SOP 4-1, *Pilot Scale Recipe Spreadsheet* lists the quantity in cubic yards of each amendment for each recipe to be tested. The corresponding weight in pounds is also provided. The amendments for a given recipe will be combined ~~in~~ **for each of the** three 15 cubic yard batches (this will allow room for blending and fluffing). Figure SOP 4-2, *Pilot Scale Batch Spreadsheet* provides the amendment quantities for each of the three 15 cubic yard batches.

5.1 Zero Balance the Scales

The scales of the grinder/mixer must be zero balanced prior to each use. This is accomplished as follows:

1. Remove any remaining material from the grinder/mixer using a broom or brush.

2. Press the [ON] key on the scale display.

3. Press the [NET/GROSS] key and within three seconds,

4. Press the [ZERO] key.

5. "ZERO" will be displayed to indicate zero balancing is complete.

5.2 Loading Amendments

The lighter amendments should generally be loaded first (e.g., straw, hay, sawdust and wood chips). The manures and vegetable waste should be loaded last to provide improved mixing. After zero balancing the scales, as described above, the amendments shall be loaded into the grinder/mixer as follows:

1. Select the proper recipe mixture from Figure SOP 4-2, *Pilot Scale Batch Spreadsheet*. Record the Recipe #, Date, and Design Quantities on the *Record of Recipe* form, ~~provided in Appendix~~ **as in Appendix G of this Pilot Scale Operational Plan.**

2. Load the first amendment via the center pivot loader from the amendment storage bin and gradually dump into the grinder/mixer until the desired weight is registered on the scales. Record the actual weight on the *Record of Recipe* for that mix batch.

3. Press the [TARE] key on the scale display to establish a temporary zero point.

4. Press the [NET/GROSS] key to select NET mode.

5. Load the second amendment in a similar fashion until the scales register the desired weight of that amendment. Record the actual weight on the *Record of Recipe* **form** for that mix batch.

6. Repeat steps 2, 3 and 4 for each additional amendment to be added.

5.3 Blending of Amendments

Once all amendments for that batch have been loaded into the grinder/mixer, the mixer will be activated to chop and blend the amendment mixture. Chopping and blending will continue as the grinder/mixer is pulled to the composting building by the farm tractor. Each load shall be blended for a minimum of ten minutes. The blended amendment batch will be unloaded as described in SOP 5.0.

NSWC CRANE

PILOT SCALE MIX RECIPIES

MIX #1

Ingredient	Qty. (CY)	Qty. (lbs.)	% Carbon	% D.M.	Carbon (lbs.)	% Nitrogen	Nitrogen (lbs.)	C:N Ratio	Cost ($/Ton)
Straw		0	0.4240	0.88	0.00	0.0123	0.00	34.47	$65
Chicken Manure		0	0.1870	0.88	0.00	0.0558	0.00	3.35	$25
Alfalfa	15	6,000	0.3290	0.85	1,677.90	0.0314	160.14	10.48	$165
Cow Manure		0	0.3820	0.21	0.00	0.0257	0.00	14.86	$22
POTW Waste	15	25,275	0.0006	0.25	3.49	0.0005	3.22	1.08	$1
Saw Dust	7.5	3,075	0.6000	0.61	1,125.45	0.0008	1.50	750.00	$20
Wood Chips	7.5	3,975	0.6000	0.88	2,098.80	0.0008	2.80	750.00	$20
Totals	45	38,325							

Mix Density (lbs/CY) = 852 — 4,905.64 — 167.66 — 29.26

Mix Unit Cost ($/CY) = $12.85

MIX #2

Ingredient	Qty. (CY)	Qty. (lbs.)	% Carbon	% D.M.	Carbon (lbs.)	% Nitrogen	Nitrogen (lbs.)	C:N Ratio	Cost ($/Ton)
Straw		0	0.4240	0.88	0.00	0.0123	0.00	34.47	$65
Chicken Manure	21	30,450	0.1870	0.88	5,010.85	0.0558	1,496.22	3.35	$25
Alfalfa		0	0.3290	0.85	0.00	0.0314	0.00	10.48	$165
Cow Manure		0	0.3820	0.21	0.00	0.0257	0.00	14.86	$22
Vegetable Waste		0	0.4000	0.30	0.00	0.0140	0.00	28.57	$95
Saw Dust		0	0.6000	0.61	0.00	0.0008	0.00	750.00	$20
Wood Chips	24	12,720	0.6000	0.88	6,716.16	0.0008	8.95	750.00	$20
Totals	45	43,170							

Mix Density (lbs/CY) = 959 — 11,727.01 — 1,504.17 — 7.80

Mix Unit Cost ($/CY) = $11.29

MIX #3

Ingredient	Qty. (CY)	Qty. (lbs.)	% Carbon	% D.M.	Carbon (lbs.)	% Nitrogen	Nitrogen (lbs.)	C:N Ratio	Cost ($/Ton)
Straw		0	0.4240	0.88	0.00	0.0123	0.00	34.47	$65
Chicken Manure		0	0.1870	0.88	0.00	0.0558	0.00	3.35	$25
Alfalfa	15	6,000	0.3290	0.85	1,677.90	0.0314	160.14	10.48	$165
Cow Manure		0	0.3820	0.21	0.00	0.0257	0.00	14.86	$22
Turkey Manure	15	783	0.4150	0.74	241.04	0.0260	15.06	16.00	$25
Vegetable Waste		0	0.4000	0.30	0.00	0.0140	0.00	28.57	$95
Saw Dust		0	0.6000	0.61	0.00	0.0008	0.00	750.00	$20
Wood Chips	15	7,950	0.6000	0.88	4,197.60	0.0008	5.60	750.00	$20
Totals	45	14,733							

Mix Density (lbs/CY) = 327 — 6,116.54 — 180.80 — 33.83

Mix Unit Cost ($/CY) = $12.98

MIX #4

Ingredient	Qty. (CY)	Qty. (lbs.)	% Carbon	% D.M.	Carbon (lbs.)	% Nitrogen	Nitrogen (lbs.)	C:N Ratio	Cost ($/Ton)
Straw		0	0.4240	0.88	0.00	0.0123	0.00	34.47	$65
Chicken Manure	1.95	2,828	0.1870	0.88	465.29	0.0558	138.84	3.35	$25
Alfalfa	11.55	4,620	0.3290	0.85	1,291.98	0.0314	123.31	10.48	$165
Cow Manure	13.5	19,200	0.3820	0.21	1,543.23	0.0257	103.62	14.86	$22
Vegetable Waste	6.45	9,675	0.4000	0.30	1,161.00	0.0140	40.64	28.57	$95
Saw Dust	11.55	4,736	0.6000	0.61	1,733.19	0.0008	2.31	750.00	$20
Wood Chips		0	0.6000	0.88	0.00	0.0008	0.00	750.00	$20
Totals	45	41,098							

Mix Density (lbs/CY) = 913 — 6,194.70 — 408.92 — 15.15

Mix Unit Cost ($/CY) = $25.22

MIX #5

Ingredient	Qty. (CY)	Qty. (lbs.)	% Carbon	% D.M.	Carbon (lbs.)	% Nitrogen	Nitrogen (lbs.)	C:N Ratio	Cost ($/Ton)
Straw		0	0.4240	0.88	0.00	0.0123	0.00	34.47	$65
Chicken Manure		0	0.1870	0.88	0.00	0.0558	0.00	3.35	$25
Alfalfa	11.55	4,620	0.3290	0.85	1,291.98	0.0314	123.31	10.48	$165
Cow Manure		0	0.3820	0.21	0.00	0.0257	0.00	14.86	$22
Turkey Manure	15.45	783	0.4150	0.74	241.04	0.0260	15.06	16.00	$25
Vegetable Waste	6.45	9,675	0.4000	0.30	1,161.00	0.0140	40.64	28.57	$95
Saw Dust	11.55	4,736	0.6000	0.61	1,733.19	0.0008	2.31	750.00	$20
Wood Chips		0	0.6000	0.88	0.00	0.0008	0.00	750.00	$20
Totals	45	10,814							

Mix Density (lbs/CY) = 440 — 4,427.21 — 181.32 — 24.42

Mix Unit Cost ($/CY) = $19.95

FIGURE SOP 4-1

NSWC CRANE

PILOT SCALE MIX RECIPIES

MIX #6

Ingredient	Qty. (CY)	Qty. (lbs.)	% Carbon	% D.M.	Carbon (lbs.)	% Nitrogen	Nitrogen (lbs.)	C:N Ratio	Cost ($/Ton)
Straw		0	0.4240	0.88	0.00	0.0123	0.00	34.47	$65
Chicken Manure		0	0.1870	0.88	0.00	0.0558	0.00	3.35	$25
Alfalfa	9	3,600	0.3290	0.85	1,006.74	0.0314	96.08	10.48	$165
Cow Manure		0	0.3820	0.21	0.00	0.0257	0.00	14.86	$22
Turkey Manure	15	783	0.4160	0.74	241.04	0.0260	15.06	16.00	$25
Vegetable Waste	9	13,500	0.4000	0.30	1,620.00	0.0140	56.70	28.57	$95
Saw Dust	6	2,460	0.6000	0.61	900.36	0.0008	1.20	750.00	$20
Wood Chips	6	3,180	0.6000	0.88	1,679.04	0.0008	2.24	750.00	$20
Totals	45	23,523							
	Mix Density (lbs/CY) = 523				5,447.18		171.29	31.80	
	Mix Unit Cost ($/CY) = $22.32								

MIX #7a

Ingredient	Qty. (CY)	Qty. (lbs.)	% Carbon	% D.M.	Carbon (lbs.)	% Nitrogen	Nitrogen (lbs.)	C:N Ratio	Cost ($/Ton)
Straw	42.9	8,580	0.4240	0.88	3,201.37	0.0123	92.87	34.47	$65
Chicken Manure	2.1	3,045	0.1870	0.88	501.09	0.0558	149.52	3.35	$25
Alfalfa		0	0.3290	0.85	0.00	0.0314	0.00	10.48	$165
Cow Manure		0	0.3820	0.21	0.00	0.0257	0.00	14.86	$22
Vegetable Waste		0	0.4000	0.30	0.00	0.0140	0.00	28.57	$95
Saw Dust		0	0.6000	0.61	0.00	0.0008	0.00	750.00	$20
Wood Chips		0	0.6000	0.88	0.00	0.0008	0.00	750.00	$20
Totals	45	11,625							
	Mix Density (lbs/CY) = 258				3,702.45		242.39	15.27	
	Mix Unit Cost ($/CY) = $7.04								

MIX #7b

Ingredient	Qty. (CY)	Qty. (lbs.)	% Carbon	% D.M.	Carbon (lbs.)	% Nitrogen	Nitrogen (lbs.)	C:N Ratio	Cost ($/Ton)
Straw	36	7,200	0.4240	0.88	2,686.46	0.0123	77.93	34.47	$65
Chicken Manure	9	13,050	0.1870	0.88	2,147.51	0.0558	640.81	3.35	$25
Alfalfa		0	0.3290	0.85	0.00	0.0314	0.00	10.48	$165
Cow Manure		0	0.3820	0.21	0.00	0.0257	0.00	14.86	$22
Vegetable Waste		0	0.4000	0.30	0.00	0.0140	0.00	28.57	$95
Saw Dust		0	0.6000	0.61	0.00	0.0008	0.00	750.00	$20
Wood Chips		0	0.6000	0.88	0.00	0.0008	0.00	750.00	$20
Totals	45	20,250							
	Mix Density (lbs/CY) = 450				4,833.97		718.74	6.73	
	Mix Unit Cost ($/CY) = $8.83								

MIX #7c

Ingredient	Qty. (CY)	Qty. (lbs.)	% Carbon	% D.M.	Carbon (lbs.)	% Nitrogen	Nitrogen (lbs.)	C:N Ratio	Cost ($/Ton)
Straw	33	6,600	0.4240	0.88	2,462.59	0.0123	71.44	34.47	$65
Chicken Manure	6	8,700	0.1870	0.88	1,431.67	0.0558	427.20	3.35	$25
Alfalfa		0	0.3290	0.85	0.00	0.0314	0.00	10.48	$165
Cow Manure		0	0.3820	0.21	0.00	0.0257	0.00	14.86	$22
Vegetable Waste	6	9,000	0.4000	0.30	1,080.00	0.0140	37.80	28.57	$95
Saw Dust		0	0.6000	0.61	0.00	0.0008	0.00	750.00	$20
Wood Chips		0	0.6000	0.88	0.00	0.0008	0.00	750.00	$20
Totals	45	24,300							
	Mix Density (lbs/CY) = 540				4,974.26		536.44	9.27	
	Mix Unit Cost ($/CY) = $10.00								

NSWC CRANE PILOT SCALE BATCH RECIPIES

(3 Batches Required Per Recipe)

MIX #1

Ingredient	Qty. (CY)	Qty. (lbs.)	% Carbon	% D.M.	Carbon (lbs.)	% Nitrogen	Nitrogen (lbs.)	C:N Ratio	Cost ($/Ton)
Straw		0	0.4240	0.88	0.00	0.0123	0.00	34.47	$65
Chicken Manure		0	0.1870	0.88	0.00	0.0558	0.00	3.35	$25
Alfalfa	5	2,000	0.3290	0.85	559.30	0.0314	53.38	10.48	$165
Cow Manure		0	0.3820	0.21	0.00	0.0257	0.00	14.86	$22
POTW Waste	5	8,425	0.0006	0.01	0.06	0.0005	0.05	1.08	$1
Saw Dust	2.5	1,025	0.6000	0.61	375.15	0.0008	0.50	750.00	$20
Wood Chips	2.5	1,325	0.6000	0.88	699.60	0.0008	0.93	750.00	$20
Totals	15	12,775							
	Mix Density (lbs/CY) = 852				1,634.11		54.86	29.78	
	Mix Unit Cost ($/CY) = $12.85								

MIX #2

Ingredient	Qty. (CY)	Qty. (lbs.)	% Carbon	% D.M.	Carbon (lbs.)	% Nitrogen	Nitrogen (lbs.)	C:N Ratio	Cost ($/Ton)
Straw		0	0.4240	0.88	0.00	0.0123	0.00	34.47	$65
Chicken Manure	7	10,150	0.1870	0.88	1,670.28	0.0558	498.41	3.35	$25
Alfalfa		0	0.3290	0.85	0.00	0.0314	0.00	10.48	$165
Cow Manure		0	0.3820	0.21	0.00	0.0257	0.00	14.86	$22
Vegetable Waste		0	0.4000	0.30	0.00	0.0140	0.00	28.57	$95
Saw Dust		0	0.6000	0.61	0.00	0.0008	0.00	750.00	$20
Wood Chips	8	4,240	0.6000	0.88	2,238.72	0.0008	2.96	750.00	$20
Totals	15	14,390							
	Mix Density (lbs/CY) = 959				3,909.00		501.39	7.80	
	Mix Unit Cost ($/CY) = $11.29								

MIX #3

Ingredient	Qty. (CY)	Qty. (lbs.)	% Carbon	% D.M.	Carbon (lbs.)	% Nitrogen	Nitrogen (lbs.)	C:N Ratio	Cost ($/Ton)
Straw		0	0.4240	0.88	0.00	0.0123	0.00	34.47	$65
Chicken Manure		0	0.1870	0.88	0.00	0.0558	0.00	3.35	$25
Alfalfa	5	2,000	0.3290	0.85	559.30	0.0314	53.38	10.48	$165
Cow Manure		0	0.3820	0.21	0.00	0.0257	0.00	14.86	$22
Turkey Manure	5	783	0.4160	0.74	241.04	0.0260	15.06	16.00	$25
Vegetable Waste		0	0.4000	0.30	0.00	0.0140	0.00	28.57	$95
Saw Dust		0	0.6000	0.61	0.00	0.0008	0.00	750.00	$20
Wood Chips	5	2,650	0.6000	0.88	1,399.20	0.0008	1.87	750.00	$20
Totals	15	5,433							
	Mix Density (lbs/CY) = 362				2,199.54		70.31	31.28	
	Mix Unit Cost ($/CY) = $13.42								

MIX #4

Ingredient	Qty. (CY)	Qty. (lbs.)	% Carbon	% D.M.	Carbon (lbs.)	% Nitrogen	Nitrogen (lbs.)	C:N Ratio	Cost ($/Ton)
Straw		0	0.4240	0.88	0.00	0.0123	0.00	34.47	$65
Chicken Manure	0.65	943	0.1870	0.88	155.10	0.0558	46.28	3.35	$25
Alfalfa	3.85	1,540	0.3290	0.85	430.66	0.0314	41.10	10.48	$165
Cow Manure	4.5	6,113	0.3820	0.21	514.41	0.0257	34.61	14.86	$22
Vegetable Waste	2.15	3,225	0.4000	0.30	387.00	0.0140	13.55	28.57	$95
Saw Dust	3.85	1,579	0.6000	0.61	577.73	0.0008	0.77	750.00	$20
Wood Chips		0	0.6000	0.88	0.00	0.0008	0.00	750.00	$20
Totals	15	13,699							
	Mix Density (lbs/CY) = 913				2,064.90		136.31	15.15	
	Mix Unit Cost ($/CY) = $25.22								

MIX #5

Ingredient	Qty. (CY)	Qty. (lbs.)	% Carbon	% D.M.	Carbon (lbs.)	% Nitrogen	Nitrogen (lbs.)	C:N Ratio	Cost ($/Ton)
Straw		0	0.4240	0.88	0.00	0.0123	0.00	34.47	$65
Chicken Manure		0	0.1870	0.88	0.00	0.0558	0.00	3.35	$25
Alfalfa	3.85	1,540	0.3290	0.85	430.66	0.0314	41.10	10.48	$165
Cow Manure		0	0.3820	0.21	0.00	0.0257	0.00	14.86	$22
Turkey Manure	5.15	783	0.4160	0.74	241.04	0.0260	15.06	16.00	$25
Vegetable Waste	2.15	3,225	0.4000	0.30	387.00	0.0140	13.55	28.57	$95
Saw Dust	3.85	1,579	0.6000	0.61	577.73	0.0008	0.77	750.00	$20
Wood Chips		0	0.6000	0.88	0.00	0.0008	0.00	750.00	$20
Totals	15	7,127							
	Mix Density (lbs/CY) = 475				1,636.43		70.48	23.22	
	Mix Unit Cost ($/CY) = $20.39								

NSWC CRANE PILOT SCALE BATCH RECIPIES

(3 Batches Required Per Recipe)

MIX #6

Ingredient	Qty. (CY)	Qty. (lbs.)	% Carbon	% D.M.	Carbon (lbs.)	% Nitrogen	Nitrogen (lbs.)	C:N Ratio	Cost ($/Ton)
Straw		0	0.4240	0.88	0.00	0.0123	0.00	34.47	$65
Chicken Manure		0	0.1870	0.88	0.00	0.0558	0.00	3.35	$25
Alfalfa	3	1,200	0.3290	0.85	336.68	0.0314	32.03	10.48	$165
Cow Manure		0	0.3820	0.21	0.00	0.0257	0.00	14.86	$22
Turkey Manure	5	783	0.4160	0.74	241.04	0.0260	15.06	16.00	$25
Vegetable Waste	3	4,500	0.4000	0.30	540.00	0.0140	18.90	28.57	$95
Saw Dust	2	820	0.6000	0.61	300.12	0.0008	0.40	750.00	$20
Wood Chips	2	1,000	0.6000	0.88	559.68	0.0008	0.75	750.00	$20
Totals	15	8,363			1,976.42		67.14	29.44	

Mix Density (lbs/CY) = 558
Mix Unit Cost ($/CY) = $22.76

MIX #7a

Ingredient	Qty. (CY)	Qty. (lbs.)	% Carbon	% D.M.	Carbon (lbs.)	% Nitrogen	Nitrogen (lbs.)	C:N Ratio	Cost ($/Ton)
Straw	14.3	2,860	0.4240	0.88	1,067.12	0.0123	30.96	34.47	$65
Chicken Manure	0.7	1,015	0.1870	0.88	167.03	0.0558	49.84	3.35	$25
Alfalfa		0	0.3290	0.85	0.00	0.0314	0.00	10.48	$165
Cow Manure		0	0.3820	0.21	0.00	0.0257	0.00	14.86	$22
Vegetable Waste		0	0.4000	0.30	0.00	0.0140	0.00	28.57	$95
Saw Dust		0	0.6000	0.61	0.00	0.0008	0.00	750.00	$20
Wood Chips		0	0.6000	0.88	0.00	0.0008	0.00	750.00	$20
Totals	15	3,875			1,234.15		80.80	15.27	

Mix Density (lbs/CY) = 258
Mix Unit Cost ($/CY) = $7.04

MIX #7b

Ingredient	Qty. (CY)	Qty. (lbs.)	% Carbon	% D.M.	Carbon (lbs.)	% Nitrogen	Nitrogen (lbs.)	C:N Ratio	Cost ($/Ton)
Straw	12	2,400	0.4240	0.88	895.49	0.0123	25.98	34.47	$65
Chicken Manure	3	4,350	0.1870	0.88	715.84	0.0558	213.60	3.35	$25
Alfalfa		0	0.3290	0.85	0.00	0.0314	0.00	10.48	$165
Cow Manure		0	0.3820	0.21	0.00	0.0257	0.00	14.86	$22
Vegetable Waste		0	0.4000	0.30	0.00	0.0140	0.00	28.57	$95
Saw Dust		0	0.6000	0.61	0.00	0.0008	0.00	750.00	$20
Wood Chips		0	0.6000	0.88	0.00	0.0008	0.00	750.00	$20
Totals	15	6,750			1,611.32		239.58	6.73	

Mix Density (lbs/CY) = 450
Mix Unit Cost ($/CY) = $8.83

MIX #7c

Ingredient	Qty. (CY)	Qty. (lbs.)	% Carbon	% D.M.	Carbon (lbs.)	% Nitrogen	Nitrogen (lbs.)	C:N Ratio	Cost ($/Ton)
Straw	11	2,200	0.4240	0.88	820.88	0.0123	23.81	34.47	$65
Chicken Manure	2	2,900	0.1870	0.88	477.22	0.0558	142.40	3.35	$25
Alfalfa		0	0.3290	0.85	0.00	0.0314	0.00	10.48	$165
Cow Manure		0	0.3820	0.21	0.00	0.0257	0.00	14.86	$22
Vegetable Waste	2	3,000	0.4000	0.30	360.00	0.0140	12.60	28.57	$95
Saw Dust		0	0.6000	0.61	0.00	0.0008	0.00	750.00	$20
Wood Chips		0	0.6000	0.88	0.00	0.0008	0.00	750.00	$20
Totals	15	8,100			1,658.09		178.81	9.27	

Mix Density (lbs/CY) = 540
Mix Unit Cost ($/CY) = $16.68

FIGURE SOP 4-2

1.0 PURPOSE

This procedure describes the methods which will be used to load amendment blends into windrow configurations for pilot scale testing.

2.0 SCOPE

This procedure applies to the Naval Surface Warfare Center, Crane, Indiana site for Bioremediation Facility pilot scale operations.

3.0 EQUIPMENT

The following equipment will be used to transport amendment blends to the composting buildings and load the blends into a windrow configuration for pilot scale testing:

3.1 Farm Tractor

The Farm Tractor is a John Deer model 7710. The tractor is used to power the grinder/mixer (PTO power) and to transport the grinder/mixer to and from the compost buildings.

3.2 Grinder/Mixer

The grinder/mixer is a Supreme model 700. The grinder/mixer is a 700 cubic foot capacity tub grinder commonly used in agricultural applications to blend and discharge livestock feed into feeding troughs. It has built in scales that provide a digital readout to the nearest ten pounds. It will be used to weigh amendments as they are being added to proportion the blend, and to chop and mix the amendment mixture.

3.3 Windrow Turner

The windrow turner is a Scarab model 20HYD450. This is a specialized piece of equipment designed to turn, mix and aerate a 20 foot wide windrow with a maximum height of 7 feet.

4.0 SAFETY AND HEALTH PRECAUTIONS AND CONTROLS

1. Use Modified Level D PPE including disposable dust masks when off loading, grinding, and loading amendments.

   Add requirements for hearing protection here based on results of sound level surveys.

2. Maintain clear distance of approximately 15 feet and wear high visibility vest when working around moving machinery. Stay in equipment operators line-of-sight.

3. Ensure all rotating equipment guards are in place and functional prior to equipment operation.

4. Disengage power to the PTO when removing any remaining material from the grinder/mixer using a broom or brush. At no time should a person reach into the bin or enter the bin of the grinder/mixer unless the unit is disconnected from the PTO drive coupling.

5. All personnel shall maintain minimum 30 feet clearance from the front or rear of the windrow turner during turning of the windrows.

5.0 PROCEDURE

Each pilot scale recipe will consist of 60 cubic yards of material, 45 cubic yards of which will be the amendment blend, the remaining 15 cubic yards will be the 25% soil loading. The amendments for a given recipe will be combined in three 15 cubic yard batches as described in SOP 4.0.

5.1 Building Windrow

The amendment portion of the windrows will be constructed as follows:

1. Transport the first batch of amendment blend from amendment storage area to the composting building via the tractor pulled grinder/mixer.

2. Position the grinder/mixer in the building and begin discharging the amendment blend through the side mounted discharge conveyor to form the outer-most windrow first as shown on drawing P-100 found in Appendix C **of this Pilot Scale Operational Plan.**

3. Continue discharging and begin traveling forward as the pile builds to a height of six feet to maintain a long row of this height.

4. Once the first batch is unloaded, return to the amendment storage area for the second batch.

5. Discharge the second batch, starting where the first left off, until about 2/3 of the batch has been placed yielding a windrow about 20 to 25 feet long.

6. Move the grinder/mixer adjacent to the start of the first windrow and begin discharging the balance of the second batch into another six feet high pile such that it overlaps the first by about three feet, yielding a combined width of 18 to 20 feet.

7. Once the second batch is unloaded, return to the amendment storage area for the third batch.

8. Discharge the third batch, starting where the second left off, finishing the second overlapping pile.

9. Remove any remaining material from the grinder/mixer using a broom or brush.

10. Repeat steps 1 through 9 for remaining recipes.

5.2 Shaping Amendment Portion of Windrow

Once amendments for all recipes within the building have been loaded into the two overlapping piles, the windrows will be shaped by the windrow turner. This will be accomplished by turning the amendments with the discharge flap on the back of the windrow turner adjusted to produce a windrow 4 feet 5 inches tall. The resulting windrow will be 20 feet wide at the base. Any miscellaneous amendment material disbursed during windrow formation will be collected and returned to its originating pile. The collection and floor cleaning will be performed using the steer skid loader as well as manual shovels and brooms.

1.0 PURPOSE

This procedure describes the methods which will be used to transport soil to the composting facility and load the soil into windrows for pilot scale testing.

2.0 SCOPE

This procedure applies to the Naval Surface Warfare Center, Crane, Indiana site for Bioremediation Facility pilot scale operations.

3.0 EQUIPMENT

The following equipment will be used to transport soil to the composting buildings and convey the soil to windrows for pilot scale testing:

3.1 Semi-Tractor and Live-Bottom Trailer

The semi-tractor is a Mack model 169CH613. The live-bottom trailer is a Red River model HS 236 102. The trailer is 43 feet long and has a minimum capacity of 48 cubic yards. It has a conveyor floor which is capable of discharging material out the rear of the trailer. The tractor-trailer rig will be used to transport soil to the composting facility.

3.2 Dump Conveyor

The dump conveyor is a specially designed piece of equipment that will be used to convey soil from the live-bottom trailer to the windrows. The unit attaches to the rear of the trailer via two swivel hooks and latches. The conveyor is self powered by a diesel engine mounted on the unit. Soil from the live-bottom trailer is discharged into a hopper on the dump conveyor and is then conveyed to the center of the windrow off the right side of the unit.

4.0 SAFETY AND HEALTH PRECAUTIONS AND CONTROLS

1. **Follow explosives handling procedures as required by U.S. Navy.**

2. Use Level C PPE when off-loading contaminated soils into windrows and Modified Level D for set-up and preparation tasks associated with off-loading.

   Add requirements for hearing protection here based on results of sound level surveys.

3. Maintain clear distance of approximately 15 feet and wear high visibility vest when working around moving machinery. Stay in equipment operators line-of-sight.

4. Ensure all rotating equipment guards are in place and functional prior to equipment operation.

5.0 PROCEDURE

During clean soil pilot testing, soil will be excavated from the borrow pit located south of the composting facility and screened; during contaminated soil pilot testing, soil will be excavated from Mine Fill A near building #153 and screened. Excavation and screening of soil from Mine Fill A is described in Appendix F of this Pilot Scale Operational Plan.

5.1 Transporting Soil

Screened, clean soil will be transported from the borrow pit to the composting facility using the tractor and live-bottom trailer. Screened, contaminated soil will be transported from Mine Fill A using the semi-tractor and live-bottom trailer. Soil at NSWC Crane averages 1.1 tons per cubic yard. 15 cubic yards of soil are required for each pilot scale recipe. This 15 cubic yards equates to 16.5 tons of soil per recipe. Each trailer load of soil will be weighed at the truck scales and adjusted if necessary to 16.5 tons (soil weight). The empty weight of the tractor-trailer rig is 16.3 tons. Loaded with 19.5 tons of soil, the total load of 32.8 tons will not exceed the 36 ton capacity of bridges on the NSWC Crane base. Figure 6-2 in Section 6.0 of this Pilot Scale Operational Plan illustrates

the travel path from Mine Fill A to the composting facility. Prior to leaving the composting facility for another load of soil, the exterior of the tractor-trailer rig will be decontaminated at the equipment decontamination facility located at the composting facility exit as discussed in SOP 3.0. This decontamination activity will be performed during the clean soil test as a practice even though the equipment will not be contaminated at that time.

5.2 Loading Soil into Windrows

The general sequence of activities for loading soil into the windrows is as follows:

1. The semi-tractor trailer rig loaded with soil arrives at the composting facility and the weight of soil is recorded on the *Record of Recipe* form **(Field SOP 4.0, Figure SOP 4-3),** for the recipe to be generated. At this time, the *Record of Recipe* form has already been partially completed during the amendment proportioning and mixing procedure, **Field** SOP 4.0, for this specific recipe.

2. The dump conveyor is connected to the rear of the trailer via two swivel hooks and latches.

3. The semi-tractor trailer enters the compost building pulling the dump conveyor.

4. Once positioned to the left of the first amendment pile, the engine of the dump conveyor will be started.

5. Next the bottom flap at the rear of the trailer will be opened approximately six inches.

6. Then the trailer and dump conveyors will be activated. Soil will begin discharging into the dump conveyor and onto the amendment windrow. Care should be taken not to transfer excess soil onto the dump conveyor and causing a dump conveyor overload. The speed of the dump conveyor should always be slightly faster than the trailer discharge conveyor.

7. As the soil begins to pile up about two feet above the top of the amendments, the tractor-trailer will be driven forward at a slow rate of speed such that a uniform two feet high pile of soil is maintained until the trailer is emptied. See Figure 6-3 in Section 6.0 of this Pilot Scale Operational Plan.

8. If the trailer is emptied prior to reaching the end of the windrow, the soil will be adjusted with the skid steer loader to uniformly distribute it along the full length of the windrow.

9. If the conveyor reaches the end of the windrow prior to being emptied, the trailer will be backed up and the balance of soil will be distributed along the windrow.

10. The height of soil as it is discharged will be adjusted as necessary on subsequent windrows such that the trailer is emptied at the same time as it reaches the end of the windrow.

11. Once the trailer is emptied, the conveyor will be disconnected and the tractor-trailer will proceed to the vehicle decontamination facility.

12. The exterior of the tractor-trailer will be decontaminated.

13. The tractor-trailer will return to the excavation site for another load of soil.

14. This process will be repeated until all windrows have been loaded with soil.

Drawings P-102 and P-103 in Appendix C of this Pilot Scale Operational Plan provide the travel path for loading soil into the windrows.

1.0 PURPOSE

This procedure describes the operations related to using the soil screener at the excavation site.

2.0 SCOPE

This procedure applies to the Naval Surface Warfare Center, Crane, Indiana site for Bioremediation Facility pilot scale operations.

3.0 EQUIPMENT

The following equipment will be used to screen the excavated soil for removal of large particles not suitable for composting at the Bioremediation Facility:

3.1 Soil Screener

The soil screener is a Knight Manufacturing Corporation model 005580 ProScreen Trommel Screen. The screener is used to filter out the large particles over 1.5 inches in diameter that are not suitable for composting. It is equipped with a conveyor for fines stacking or loading.

3.2 Backhoe

The backhoe is a CAT 416 B that is used to load excavated soil into the screener. The backhoe is also used to remove large particles rejected from the screener that will not be used in the composting process.

3.3 Semi-Tractor and Live-Bottom Trailer

The semi-tractor is a Mack model 169CH613. The live-bottom trailer is a Red River model HS 236 102. The trailer is 43 feet long and has a minimum capacity of 48 cubic yards. It has a conveyor floor which is capable of discharging material out the rear of the trailer. The tractor-trailer rig is used to transport screened soil from the excavation site to the composting facility.

3.4 Stacking Conveyor

The stacking conveyor is a trough belt conveyor which is used to convey the screened material from the discharge of the screener to the live-bottom trailer.

4.0 SAFETY AND HEALTH PRECAUTIONS AND CONTROLS

1. **Follow explosives Handling Procedures as required by U.S. Navy.**

2. Use Level C PPE per the Site Safety and Health Plan (SSHP). Personnel shall avoid direct contact with contaminated soil as much as possible.

   Add requirements for hearing protection here based on results of sound level surveys.

3. Maintain clear distance of approximately 15 feet and wear high visibility vest when working around moving machinery. Stay in equipment operators line-of-sight. Ensure back-up alarms are operational on equipment.

4. Ensure all rotating and conveyer equipment guards are in place and functional prior to equipment operation.

5. Ensure Screener is operated on level ground and is properly locked and stabilized in position.

6. Know location of emergency stop switch on Screener control panel.

7. Shut-down Screener and remove key prior to refueling and servicing.

8. Ensure trailer brakes are locked on Semi-Tractor and Live-Bottom Trailer prior to loading.

5.0 PROCEDURE

5.1 Placement

Placement of the screener unit will be per the Excavation Plan.

5.2 Screener Start-up

5.2.1 Starting Engine

1. Check all fluid levels before starting engine.

2. Turn all switches to off and make sure emergency stop switches are deactivated (out position).

3. Pull out the throttle enough for 1000 RPM.

4. Push and hold override button. If the red light turns on, an automatic shutdown or emergency stop switch is engaged and will not allow the engine to start. Check all gauges and switches and correct the shutdown condition. Turn the ignition switch until the engine starts. Immediately release the key, but hold the override button for approximately 5 seconds or until oil pressure is maintained.

5. Check all engine gauges and allow engine to warm up before increasing throttle to operating speed.

5.2.2 Positioning The Conveyor

After the engine has warmed up, the fines conveyor can be moved into position.

1. Remove the transport lock.

2. Make sure the area under the conveyor is clear of obstructions or bystanders.

3. Lower and extend the conveyor using the fine conveyor cylinder switch on the control panel.

4. Insert locking pins in side frame.

5. Adjust support chains as necessary to level the outboard pulley to the screen frame.

5.2.3 Starting The Components

1. Increase engine speed to 1800-2000 RPM.

2. With the fines conveyor speed adjustment at 0, start the fines conveyor and increase to desired speed. Check the belt tracking and alignment and adjust if necessary.

3. With the drum speed adjustment at 0, start the drum and increase to desired speed.

4. With the feed conveyor adjustment at 0, start the feed conveyor and increase to desired speed. Check the belt tracking and alignment and adjust as necessary.

5.3 Loading Screener

Excavated soil will be loaded directly in the screener hopper with the backhoe for processing.

1. Begin feeding carefully to be sure that the screen speeds are suitable.

2. The loader operator must use good judgement when loading the screen. Any objects which could severely damage the screen must be separated before loading into the hopper.

3. Generally, load material into the front end of the hopper.

4. Operate the prescreen whenever necessary to remove large material from the top. Make sure no one is standing in the dump area before operating the prescreen.

5.4 Product Handling to Truck

Screened material will be conveyed from the screener unit directly into the tractor trailer bed via the stacking conveyor.

5.5 Rejected Material

Rejected material from the screening process will be discharged into a **lined** pile. The material will be segregated into separate **lined** piles based on material type, i.e., wood waste, rocks, and other.

1.0 PURPOSE

This procedure describes the methods which will be used to turn pilot scale windrows and add water to adjust moisture content.

2.0 SCOPE

This procedure applies to the Naval Surface Warfare Center, Crane, Indiana site for Bioremediation Facility pilot scale operations.

3.0 EQUIPMENT

The following equipment will be used to turn pilot scale windrows and add water to adjust moisture content of the compost windrows:

3.1 Windrow Turner

The Windrow Turner is a Scarab model 20HYD450. This is a specialized piece of equipment designed to turn, mix and aerate a twenty-foot wide windrow with a maximum height of seven feet. It is equipped with a 200 gallon tank and spray nozzles to add moisture to windrows during the turning process.

3.2 Mobile Water Tank

The Mobile Water Tank is a 1,000 gallon capacity, trailer mounted poly tank. It is equipped with a five horse power gasoline powered discharge pump with a two-inch discharge. It can be pulled by a farm tractor, one-ton pick-up truck or other comparable equipment.

3.3 Portable Transfer Pump

The Portable Transfer Pump is a five horse power gasoline powered pump with a two-inch semi-rigid suction pipe and a two-inch flexible discharge hose.

4.0 SAFETY AND HEALTH PRECAUTIONS AND CONTROLS

1. **Follow explosives handling procedures as required by the U.S. Navy.**

2. Use Level C PPE per the Site Safety and Health Plan (SSHP). Personnel shall avoid direct contact with contaminated soil as much as possible.

   Add requirements for hearing protection here based on results of sound level surveys.

3. Maintain clear distance of approximately 15 feet and wear high visibility vest when working around moving machinery. Stay in equipment operators line-of-sight. Ensure back-up alarms are operational on equipment.

4. Ensure all rotating equipment guards are in place and functional prior to equipment operation.

5. All personnel shall maintain minimum 30 feet clearance from in the front or rear of the windrow turner during turning of the windrows.

6. Operate Windrow Turner with cab door closed and latched in position. Adjust ventilation system in cab for comfort.

7. Use lockout controls on Windrow Turner when cleaning the flaps and drum during windrow turning activities.

5.0 PROCEDURE

Windrows will typically be turned once daily during pilot scale operation. Turning frequency may be adjusted at the direction of MK Engineering, with concurrence of the U.S. Navy. Additionally, windrows will be turned after water addition. The operating goal for compost moisture content is 40 to 60% of the Maximum Water Holding Capacity (MWHC) of the compost. Too little moisture will inhibit microbial movement and nutrient availability, however too much moisture will fill the void spaces needed for proper aeration which is essential for aerobic microbial growth.

5.1 Windrow Turning

Each pilot scale windrow will be turned daily after pre-turning monitoring of the windrows is complete. The following steps will be followed during the turning process:

1. Position the windrow machine at the windrow to be turned.

2. Engage the drum on the windrow machine and begin turning the windrow.

3. Upon reaching the end of the windrow, stop the windrow machine and disengage the drum.

4. Lockout the windrow machine; the driver will exit the cab, lock the door and wait on the windrow machine platform until given clearance by the person cleaning the underside of the machine.

5. Clean caked material from the drum and flaps of the windrow machine.

6. Cleanup material which has been thrown beyond the ends of the windrow and place in back onto the windrow using a skid steer loader or similar piece of equipment.

7. Repeat steps 1 through 6 for the remaining windrows to be turned.

5.2 Moisture Addition

Water will be added to the windrows to adjust moisture content when the actual moisture level falls below 40% of the MWHC (Reference Field SOP 1.0 for determination of actual moisture and MWHC). Water will be added using the spray nozzles on the windrow machine during the turning process. No more than 100 gallons will be added to a single windrow prior to taking additional moisture readings. Water will be added as follows:

1. Poly tank on the windrow machine will be marked at the half-full level.

2. Start with water level either full or at the half full mark.

3. Engage spray nozzles at the start of windrow turning.

4. Each pass with the windrow machine will add approximately 30 to 40 gallons of water.

5. Monitor level of water in tank to assure no more than half a tank (100 gallons) is added to the windrow.

6. Two or three passes may be required to add the desired amount of moisture.

7. After water addition, the tank will be refilled to the starting level with a metered water supply to determine actual amount added.

8. Record amount of water added on the Windrow Process Data - Daily Log found in Appendix D of ~~the~~ **this** Pilot Scale Operation Plan.

1.0 PURPOSE

This procedure describes the operations related to using the truck scale at the bioremediation facility. **All trucks carrying soil or amendments shall be weighed prior to entering the Bioremediation Facility.**

2.0 SCOPE

This procedure applies to the Naval Surface Warfare Center, Crane, Indiana site for Bioremediation Facility pilot scale operations.

3.0 EQUIPMENT

The following equipment will be used to weigh the quantity of amendments to be used for compost windrows at the Bioremediation Facility.

3.1 Truck Scale

The truck scale is manufactured by Tennessee Scale Works Inc., and is a Weigh-Tronix model FCTS7010-100T truck scale system. **The system is equipped with a WI-130 electronic indicator/control panel which includes the following features:**

- **Eighteen Operational Keys,**
- **Eleven Operational Annunciators,**
- **Eight digit, seven segment, 0.8 inch high LED display,**
- **Three independently programmable units of measure,**
- **Battery backup real time clock and RAM,**
- **Self diagnostics,**
- **Circuitry protection, and**
- **Nema 4X enclosure.**

The system is designed to be self prompting utilizing the vehicle driver as the scale operator. All necessary information is keyed in by the driver and is transmitted to the remote printer located in the Bioremediation Facility office trailer. The system is provided with a ProxLink Radio Module and a LX-300 printer.

The ProxLink Radio Module is a small communication device that replaces cables with a wireless Radio Frequency (RF) technology. This allows the transmission and receiving of all scale data to the remote printer without the use of wires. The receiving LX-300 printer is an Epson inkjet printer with Epson replacement parts and accessories.

3.2 Semi-Tractor and Live-Bottom Trailer

The semi-tractor is a Mack model 169CH613 truck. The live-bottom trailer is a Red River model HS 236 102. The trailer is 43 feet long and has a minimum capacity of 48 cubic yards. It has a conveyor floor which is capable of discharging material out the rear of the trailer. The tractor-trailer rig is used to transport soil to the composting facility as well as transport finished compost from the Bioremediation Facility.

4.0 PROCEDURE

4.1 Placement

The truck scale is placed at the entrance to the Bioremediation Facility on **Highway** (H)-161.

4.2 Truck Scale Operation

The truck scale operation will be utilized in monitoring both inbound and outbound weights.

4.2.1 Inbound Operation

1. Drive the semi-truck and trailer (or dump truck) onto the scale platform.

2. Ensure all wheels are located on the truck scale weight platform.

3. Press the "**IN**" button on the scale indicator.

4. Enter the truck identification number.

5. The indicator will display the inbound weight. Press any key to continue.

6. The driver may now exit the scales and enter the Bioremediation Facility.

4.2.2 Outbound Operation

1. Drive the semi-truck and trailer onto scale platform.

2. Ensure all wheels are located on the truck scale weight platform.

3. Press the "**OUT**" button on the scale indicator.

4. Enter the truck identification number.

5. The indicator will display the gross, tare, and net weights. Press any key to continue.

6. After the outbound process is completed, a ticket will be printed for the driver.

7. The driver may now exit the truck scale for the outbound destination.

4.3 Truck Scale Calibration

Periodic maintenance and calibration will be performed as part of the purchased extended maintenance agreement. This function will be performed by:

Indianapolis Scale Company
7302 Kentucky Avenue
Camby, Indiana 46113

Phone: (317) 856-6606
FAX: (317) 856-6655
Contact: Jim Holbrook

All necessary maintenance and calibration records will be provided to the Bioremediation Facility Site Quality Control Supervisor for records retention at the facility.

5.0 Record Keeping

The Facility Site Quality Control Supervisor shall maintain a listing of all Vehicle Identification numbers which coordinates with the Supplier names, or the Clean or Contamination Soil Trucks. Every time the scale is used, a scale ticket is produced at the printer in the facility, and stored with the daily log. The scale tickets identify the following information:

- Date,
- Time,
- Vehicle Number,
- Gross Weight,
- Tare Weight, and
- Net Weight.

All weights shall be recorded in the Daily Logbook and maintained at the Bioremediation Facility.

1.0 PURPOSE

This procedure describes the material and methods in detail which will be used for time integrated industrial hygiene air sampling of bioaerosols, explosive residues, metals and organic compounds.

2.0 SCOPE

This procedure applies to the Naval Surface Warfare Center, Crane, Indiana site for Bioremediation Facility pilot scale operations. This procedure only includes time integrated air sampling as described in Section 7.3 of the Task-Specific Site Safety and Health Plan (SSHP) document (SSHP, 1997). A subcontract is in place with Lyle Environmental Management, Inc to provide required equipment rentals and analytical services. Refer to RFQ 4324-060 under purchase order 2F6-4324-2783. The Cleveland Senior Safety Supervisor will direct and perform all air sampling and coordinate his efforts with the MK field SSHO.

3.0 MATERIAL

The following material (equipment) will be used for air sampling.

3.1 Bioaerosols

Included will be a high volume sampling pump with 2-Stage Andersen Impactor calibrated using 4 liter (L) glass calibration jar with calibration specific petri dishes. All sampling and calibration equipment will be supplied by laboratory on a rental agreement. Seventy percent ethanol will be supplied by the laboratory. Miscellaneous consumables such as disposable gloves, freezer bags, spray bottle, and pans will be purchased prior to start-up by the Cleveland Senior Safety Supervisor in coordination with the MK field SSHO.

Samples will be collected by impaction on pre-selected growth media plates using a high volume sampling pump with 2-Stage Andersen Impactor. The growth media will be Standard Method Agar (SMA) for bacteria and Potato Dextrose Agar (PDA) for fungi (molds and yeast). The Andersen Two Stage uses plastic petri dishes containing 20 mil-liter (mL) of the appropriate growth media prepared by the analytical laboratory and shipped to the field.

Both the SMA and PDA are supplied to the analytical laboratory by Becton Dickinson and Company. The approximate formula for SMA per L purified water is: 5.0 gram (g) pancreatic digest of casein; 2.5 g yeast extract; 1.0 g dextrose; and 15.0 g agar. The approximate formula for PDA per L purified water is: 4.0 g potato, infusion from (solids); 20.0 g dextrose; and 15.0 g agar.

The calibration specific petri dishes are extra sampling petri dishes filled with either SMA or PDA. They were used only for determining the pre- and post-sampling flow rates of the sampling pump.

3.2 Explosive Residues

Included will be Gillian multi-flow sampling pumps, Gillabrator calibrator, and tygon tubing. An OSHA Versatile Sampler (OVS) Tube Holder from SKC Corporation will be used to hold the OVS Tube in place and fastened to the worker. Refer to SKC 1997 Comprehensive Catalog and Air Sampling Guide on page 34 (SKC, 1997) for this holder.

Samples will be collected on sorbent and filter tube, 270/140 XAD-2 and glass fiber filter, OVS Tube. OSHA Method 44 (OSHA, 1983) recommends collection of 2,4-DNT and 2,4,6-TNT on modified Tenax-GC Tubes (100 milligram (mg) /50 mg sections). The modification includes placing an 8 millimeter (mm) glass fiber filter inside of the tube ahead of the first resin bed. OSHA's Chemical Sampling Information (CSI, 1996) database available through the OSHA Computerized Information System (OCIS) recommends 37 mm glass fiber filter for collection of RDX and HMX.

By design, the OSHA OVS tube satisfies requirements for both an adsorbent bed and a filter media. The analytical laboratory recommended using the XAD-2 tube instead of Tenax, and stated the XAD-2 tube will provide equivalent if not better collection efficiency than Tenax and costs less per OVS tube. This was also confirmed by an SKC Corporation representative by telephone. The Tenax tubes are mainly designed where thermal desorption techniques are used in the analysis of the sample media. A description of the XAD-2 tube is provided in the SKC 1997 Comprehensive Catalog and Air Sampling Guide on page 29 (SKC, 1997).

3.3 Metals

Included will be Gillian multi-flow sampling pumps, Gillabrator calibrator, and tygon tubing. A Filter Cassette Holder will be used to hold the 0.8 micrometer (µm) cellulose ester membrane (MCE) filter with support pad and 3-piece 37 mm clear styrene acrylonitrile (SAN) cassette in place and fastened to the worker. Refer to SKC 1997 Comprehensive Catalog and Air Sampling Guide (SKC, 1997) part number 225-1 for this holder.

3.4 Organic Compounds

Included will be Gillian multi-flow sampling pumps, Gillabrator calibrator, and tygon tubing. Tube Holders will be used to hold the 100 mg/50 mg coconut shell charcoal tubes in place and fastened to a step ladder inside of the composting structure. Refer to SKC 1997 Comprehensive Catalog and Air Sampling Guide (SKC, 1997) part number 222-3-1 for this holder.

4.0 METHODS

The following methods will be used for air sampling.

4.1 Bioaerosols

During active composting, six area samples will be obtained inside of the composting structure and six area samples outside of the structure approximately 100 m downwind from the composting structure. The samples will be obtained approximately two and three days into the composting process. Samples inside of the structure will be taken immediately after the windrows are turned. One sample set consists of the following:

1. Bacteria - 1 respirable and 1 nonrespirable culture plate
2. Fungi - 1 respirable and 1 nonrespirable culture plate

Therefore six sample sets inside of the structure for bacteria will require 12 culture plates and six sample sets for Fungi inside of the structure will require 12 culture plates for a total of 24 culture plates. Three of the respirable sized bacteria plates and three of the non respirable sized bacteria plates will be subcultured using velveteen impression at the laboratory for *E.coli* analysis.

The outside samples will total 24 the same as the inside samples. Velveteen impression will be obtained for the same amount of samples as the inside samples, 6 samples. An estimated 4 field culture blanks will be obtained in the field.

4.1.1 Procedure

Bioaerosol samples will be collected in accordance with the guidance presented in the American Industrial Hygiene Association (AIHA), Field Guide for the Determination of Biological Contaminants in Environmental Samples (AIHA, 1996).

The airflow for the sampling unit will be adjusted to 28.3 L/min and verified using a factory calibrated electronic bubble-tube calibrator with a capacity to 30 L/min. Prior to calibration, the temperature, pressure, and relative humidity will be recorded on a calibration log sheet. During calibration, designated calibration only plastic petri dishes will be inserted into the impactor stages. The impactor stages will be placed in a 4 L calibration jar as described in Bisesi and Kohn, (1995). The pre-sampling flowrate (Q_{pre}) will be determined using the electronic bubble-tube calibrator based on the average result of three measurement trials and recorded on the calibration log sheet.

Prior to sampling, each plate will be labeled to specify stage, location, and sampling time. After calibration, the impactor stages will be disassembled and sprayed and swabbed with seventy percent ethanol/water and air dried on disposable pans. Disposable latex gloves will be worn when disinfecting and handling the impactor and sample plates.

After air drying, the impactor stages will be loaded with sample petri dishes. The petri dish samples will be placed concave surface down on disposable pans pre-wiped with seventy percent ethanol/water.

At the sampling site, the sampling pump will be turned "ON" and start time recorded. After a specified time, the pump will be turned "OFF" and stop time recorded. Sampling time will be ten minutes. Ten minutes was selected as the sampling time based on Figure 21-5 from Nevalainen et at. (1993). This figure shows at an assumed concentration of bioaerosols particles in air of $10^3/m^3$, the recommended Andersen two-stage sampling time is 17.7 minutes. Based on data reviewed from IH sampling at other types of composting facilities,

concentrations of bioaerosols in air could be approximately $10^3/m^3$ or higher. If levels are higher, ten minutes should provide enough of a factor to prevent overloading the sample media, leading to counting errors and inhibition effects.

After completing sampling, the unit will be disassembled and the covers of the petri dish installed. The plates will be placed in a cooler filled with blue ice right-side-up. The blue ice will maintain storage temperatures of about 4 °C during shipment to the laboratory. One set of negative controls (field blanks) for every ten collected samples will be prepared. A set of negative controls will be prepared by loading the sampling instrument with filled plates, followed by removal of the plates without activating the sampling pump. Shipment and storage of negative control plates coincides with the environmental samples.

In addition to the field blanks, two travel control blanks will be sent by the analytical laboratory with the shipment of petri dishes. The travel control blanks are not opened in the field and are returned to the laboratory with the field samples for analysis to determine if contamination could have occurred. A Chain-of-Custody form will be completed and attached to the cooler. As part of the analytical laboratory quality control program, one laboratory trip blank and one laboratory field blank will also be analyzed.

The calibration only plastic petri dishes were again inserted into the impactor stages and post-sampling calibration flow rate (Q_{post}) data will be obtained and the data recorded on the calibration log sheet. Q_{post} will be checked to make sure its value is within 10% of Q_{pre}. The average flow rate (Q_{avg}) will be calculated based on the average of the pre- and post- sampling flow rates and recorded on the calibration log sheet. Q_{avg} becomes the actual flow rate in the field (Q_{act}) and is corrected in the field to standard flow rate (Q_{std}), where standard temperature and pressure equal 25° C (298 Kelvin (K)) and 760 mm Hg (Pressure (P), respectively. Q_{std} is calculated from the following equation and the value recorded on the calibration log sheet:

$$Q_{std} = Q_{act} \times (298/T) \times (P/760)$$

4.1.2 Sample Analysis

A separate growth media as described in the Material section for both respirable and non-respirable fractions will be used for each of the following constituents and analyzed accordingly:

1. Total bacteria (total plate count), subculture from bacteria plate for *E.coli* as a marker from manure.

2. Fungi (molds and yeast), look especially for the fungus *Aspergillus fumigatus.*

At the laboratory, as soon as possible and before 24 hr, the sample plates will be placed right-side-up for fungi and upside down for bacteria in an incubator set at an appropriate temperature for incubation. For bacteria, the incubation temperature will be 35 ± 1 °C for 48 hours ± 2 hr. For fungi (molds and yeast), the incubation temperature will be 35 ± 1 °C for 120 hours. After incubation of the bacteria plates, a velveteen impression will be obtained and pressed onto either McConkey or EMB growth media for *E.coli* subculturing and subsequent analysis.

Analysis for bacteria (total plate count) will be completed by laboratory using a Quebec colony counter, dark-field, with suitable light source and grid plate in accordance with Food and Drug Administration (FDA) Bacteriological Analytical Manual. Analysis for *E.coli* will be completed by laboratory using the MICRO-ID system (MICRO-ID, 1989). The MICRO-ID system contains filter-paper disks impregnated with reagents which detect the presence of specific enzymes and/or metabolic produced by certain microorganisms. These reagents include a substrate to be acted upon by a bacterial enzyme and a detection system which reacts with the metabolic end-product to yield identifiable color change. Precise quantities of substrate and/or detection reagents are applied to each disk. Following interpretation of results, identification of *E.coli* can be made by visual identification or through the MICRO-ID Identification Manual.

Analysis for fungi (molds and yeast) will be completed by laboratory using a Quebec colony counter, dark-field, with suitable light source and grid plate in accordance with Lyle Laboratories SOP for Yeast and Mold Count, Document Number 369-72 (SOP, 1996) based on procedures for determining plate count developed by the Association of Official Analytical Chemists (AOAC), and by the American Public Health Association (APHA).

The concentration of microorganisms will be determined based on the number of colonies counted divided by the volume of air sampled. The concentration is expressed in units of colony forming units per cubic meter of air (cfu/m^3) as calculated in the following equation:

$$\text{Bioaerosol concentration (cfu/m}^3\text{)} = \frac{\text{Number of colonies counted}}{\text{Vol. of air sampled in m}^3}$$

4.1.3 Data Analysis

The laboratory will report quantitative laboratory analysis for each sample in raw data (as total count) and cfu/m^3. The laboratory will report qualitative laboratory analysis results for each sample by identifying the type of microorganism found.

4.2 Explosives Residues

During soil excavation and screening at the Mine Field A facility, six personal samples of full shift duration, or if necessary, split shift duration will be obtained from two of the laborers. The laborer's are considered the maximally exposed individual for this task.

At the composting facility, six personal samples of full shift duration, or split shift if necessary, will be obtained from the Environmental Technician. The Environmental Technician is considered the maximally exposed individual during the composting process since he will be responsible for supervising the building of the windrows, applying water during mixing and refining of the windrows, and for monitoring process parameters.

The construction superintendent may also be in the building during windrow building assisting the Environmental Technician. If this is the case, personal samples of full shift or split shift will be obtained.

Four to six area samples inside of the composting structure during active composting will be obtained as a basis for design and verification of breathing zone sampling strategies (Rock, 1995). The area samples will be of full shift duration, obtained inside of the compost building near the compost piles, but far enough so as not be hit by the windrow turner machine and any of the compost thrown from its mixing flails. The sample pump and media will be secured to a portable step ladder at approximately 1.5 m above the floor. Area samples should be biased by representing the worst-case exposure since no one will be in the structure during turning of the windrows once "active" composting begins except for the windrow machine operator. The windrow machine operator will be working from an enclosed cab with inlet air filtration. One or two personals samples may be obtained from the windrow machine operator, however, the time

to complete two to three passes through the compost piles is minimal. Thus sufficient sampling time may not be obtainable.

The personal samples will be compliance samples. (Rock, 1995) reports that for compliance sampling, one or more samples determine whether the exposure samples is in or out of compliance. (Rock, 1995) also reports that this technique does not predict overall conditions in the workplace; it is valid only for estimating the meaning of the exposure(s) observed at the time and place of the compliance sampling campaign, as specified in the regulation. (Rock, 1995) states at least six samples are required for a valid estimate of the confidence interval around the mean and more than eleven are required to estimate the variance.

4.2.1 Procedure

To obtain a full shift sample of eight hours (hr) of 120 L air volume, the flow rate of the pump will be adjusted to 0.5 L/min and verified using a factory calibrated electronic bubble-tube calibrator with a capacity to 4 L/min. If split shift samples of four hour duration are obtained, the pump will be adjusted to 1.0 L/min. Prior to calibration, the temperature, pressure, and relative humidity will be recorded on a calibration log sheet at the sampling site. Both ends of a labeled OVS tube will be broken open and inserted into the OVS tube holder. The sampling train will be assembled. It will consist of high-flow pump with tygon tubing connected to a tube holder. After assembly, the sampling pump with sampling train attached, with the addition of a moisture trap will be checked for calibration to 0.5 L/min.

The pre-sampling flowrate (Q_{pre}) will be determined using the electronic bubble-tube calibrator based on the average result of three measurement trials and recorded on the calibration log sheet.

The OVS tube holder containing a labeled sampling tube will be positioned vertically and attached to the worker within the breathing zone, and the air sampling pump will be secured to the belt of the worker for personal sampling. The sampling train will be positioned and secured to a step ladder approximately 1.5 m above the floor for area sampling.

At the sampling site, the sampling pump will be turned "ON" and start time recorded. After a specified time, the pump will be turned "OFF" and stop time recorded. After sampling, the sampling train will be removed from the worker and

the post-sampling calibration flow rate (Q_{post}) data obtained and the data recorded on the calibration log sheet. Q_{post} will be checked to make sure its value is within 10% of Q_{pre}. The average flow rate (Q_{avg}) will be calculated based on the average of the pre- and post- sampling flow rates and recorded on the calibration log sheet. Q_{avg} becomes the actual flow rate in the field (Q_{act}) and is corrected in the field to standard flow rate (Q_{std}), where standard temperature and pressure equal 25° C (298 Kelvin (K)) and 760 mm Hg (Pressure (P), respectively. Q_{std} is calculated from the following equation and the value recorded on the calibration log sheet:

$$Q_{std} = Q_{act} \times (298/T) \times (P/760)$$

The OVS tube will be removed from the holder and the sample media label checked and the OVS tube end caps will be custody sealed, wrapped in protective covering, and placed in a cooler filled with blue ice right-side-up. The blue ice will maintain storage temperatures of about 4 °C during shipment to the laboratory. A Chain-of-Custody form will be completed and attached to the cooler.

One set of negative controls (field blanks) for every ten collected samples will be prepared. A set of negative controls will be prepared by assembling the sampling train with an opened OVS tube inserted into the tube holder, followed by removal of the OVS tube without activating the sampling pump.

4.2.2 Sample Analysis

At the laboratory, the samples will be analyzed per USEPA Method 8330 (USEPA SW846, 1994) using a Hewlet Packard 1040A UV-VIS Diode Array High Pressure Liquid Chromatography (HPLC) detector system providing a scan for specific analytes and isomers including HMX, RDX, TNT, 1,3-DNB, TNB, and 2,4-DNT. The analysis will be completed in accordance with Lyle Environmental Management, Inc., Standard Operating Procedure (SOP) CH-17 (SOP, 1995). Samples will be extracted with acetonitrile and analyzed by HPLC. The area of the peaks of the unknown sample will be compared to standard injections. Desorption efficiency (DE), expressed in percent, will be calculated by the analytical laboratory and factored in to determine the mass of analyte on the OVS Tube sections. The concentration (C), of analyte in the air volume sampled (V) in L will be calculated from the following equation:

$$C\ (mg/m^3) = \frac{[W_f\ (mg) + W_b\ (mg) - B_{fb}\ (mg)] \times 10^3}{V\ (L)}$$

where:

C = concentration of analyte in air, in mg/m^3
W_f = mass of analyte found in the sample front, in mg
W_b = mass of analyte found in the sample back (if any), in mg
B_{fd} = mass of analyte found in the blank front minus the blank back, in mg
V = volume of air sampled, in L

During sample analysis, if $W_b > W_f/10$, the analytical laboratory will report breakthrough and possible sample loss. The OSHA Method 44 uses gas chromatography with thermal energy analyzer and explosives analysis package (GC/TEA/EAP), but lists HPLC as one of several very adequate analytical techniques for DNT and TNT. The OSHA OCIS CSI (CSI, 1996) lists HPLC-UV for RDX and HMX analysis. By using EPA Method 8330, an analysis of the key analytes can be conducted from a single media using one method.

4.2.3 Data Analysis

The laboratory will report analysis results in mg/m^3 for each detected constituent.

4.3 Metals

During soil excavation and screening at the Mine Fill A facility, obtain two personal samples of full shift duration, or if necessary, split shift duration from two of the laborers. During composting, obtain two personal samples of full shift duration, or if necessary, split shift duration from the windrow turning machine operator during the first or second week into the composting process during turning of the windrow. During composting, obtain two area samples from inside the composting facility of full shift duration. Estimate 8 samples for analysis (6 samples plus 2 blanks).

4.3.1 Procedure

To obtain a full shift sample of eight hours (hr) of 720 L air volume, the flow rate of the pump will be adjusted to 1.5 L/min and verified using a factory calibrated electronic bubble-tube calibrator with a capacity to 4 L/min. If split shift samples of four hour duration are obtained, the pump will be adjusted to 3.0 L/min. Prior

to calibration, the temperature, pressure, and relative humidity will be recorded on a calibration log sheet at the sampling site. Both end caps of a labeled filter cassette will be removed and inserted into the filter cassette holder. The sampling train will be assembled. It will consist of high-flow pump with tygon tubing connected to a tube holder. After assembly, the sampling pump with sampling train attached, with the addition of a moisture trap will be checked for calibration to 1.5 L/min or 3.0 L/min depending on the sample duration.

The pre-sampling flowrate (Q_{pre}) will be determined using the electronic bubble-tube calibrator based on the average result of three measurement trials and recorded on the calibration log sheet.

The filter cassette holder containing a labeled filter cassette will be positioned vertically and attached to the worker within the breathing zone, and the air sampling pump will be secured to the belt of the worker for personal sampling. The sampling train will be positioned and secured to a step ladder approximately 1.5 m above the floor for area sampling.

At the sampling site, the sampling pump will be turned "ON" and start time recorded. After a specified time, the pump will be turned "OFF" and stop time recorded. After sampling, the sampling train will be removed from the worker and the post-sampling calibration flow rate (Q_{post}) data obtained and the data recorded on the calibration log sheet. Q_{post} will be checked to make sure its value is within 10% of Q_{pre}. The average flow rate (Q_{avg}) will be calculated based on the average of the pre- and post- sampling flow rates and recorded on the calibration log sheet. Q_{avg} becomes the actual flow rate in the field (Q_{act}) and is corrected in the field to standard flow rate (Q_{std}), where standard temperature and pressure equal 25° C (298 Kelvin (K)) and 760 mm Hg (Pressure (P), respectively. Q_{std} is calculated from the following equation and the value recorded on the calibration log sheet:

$$Q_{std} = Q_{act} \times (298/T) \times (P/760)$$

The filter cassette holder will be removed from the holder and the sample media label checked and the cassette end caps will be custody sealed, wrapped in protective covering, and placed in a cooler filled with blue ice right-side-up. The blue ice will maintain storage temperatures of about 4 °C during shipment to the laboratory. A Chain-of-Custody form will be completed and attached to the cooler.

One set of negative controls (field blanks) for every ten collected samples will be prepared. A set of negative controls will be prepared by assembling the sampling train with an opened cassette inserted into the filter cassette holder, followed by removal of the cassette without activating the sampling pump.

4.3.2 Sample Analysis

At the laboratory, the samples will be analyzed per NIOSH Method 7300 for metals scan using a Graphite Furnace Atomic Absorption (GFAA) Spectroscopy. Analytes include aluminum, cadmium, iron, nickel, antimony, chromium, lead, arsenic, cobalt, zinc, beryllium, copper, and magnesium. The analysis will be completed in accordance with Lyle Environmental Management, Inc., Standard Operating Procedure (SOP) (SOP, 1991).

The concentration (C), of analyte in the air volume sampled (V) in L will be calculated from the following equation:

$$C\ (mg/m^3) = \frac{[Ws\ (mg) - W_b\ (mg)] \times 10^3}{V\ (L)}$$

where:

C = concentration of analyte in air, in mg/m^3
W_f = mass of analyte on the sampled filter, in mg
W_b = mass of analyte found on the blank filter (if any), in mg
V = volume of air sampled, in L

4.3.3 Data Analysis

The laboratory will report analysis results in mg/m^3 for each detected constituent.

4.4 Organic Compounds

Time-integrated area air sampling for hydrocarbons using personal air sampling pumps will be performed by the MK SSHO during the composting process to determine what, if any, of the hydrocarbon constituents may be present and their levels. Sample collection and analysis will be completed in accordance with the following methods: (1) NIOSH 1500 for hydrocarbons, (2) NIOSH 1501 for aromatic hydrocarbons, and (3) NIOSH 1003 for halogenated hydrocarbons.

During the composting process, obtain two area samples of full shift duration **inside** of the structure and two **outside** of the structure (representing background) for each of the three methods approximately one week into the composting process. Area samples inside of the composting structure during active composting will be obtained as a basis for design and verification of breathing zone sampling strategies if determined to be necessary. The area samples will be of full shift duration, obtained inside of the compost building near the compost piles, but far enough so as not be hit by the windrow turner machine and any of the compost thrown from its mixing flails. The sample pump and media will be secured to the portable step ladder at approximately 1.5 meter (m) above the floor. For each method, estimate 4 samples for analysis (12 samples plus 3 blanks) for a total of 15 samples.

4.4.1 Procedure

To obtain a full shift sample of eight hours (hr), the flow rate of the pump will be adjusted to required flowrate listed below and verified using a factory calibrated electronic bubble-tube calibrator with a capacity to 4 L/min.

a. NIOSH 1500 - volume of 4 L, flowrate of $\leq$ 0.20 L/min based on n-hexane.

b. NIOSH 1501 - volume of 30 L, flowrate of $\leq$ 0.20 L/min based on benzene.

c. NIOSH 1003 - volume of 60-70 L, flowrate approximately 0.14 L/min.

Prior to calibration, the temperature, pressure, and relative humidity will be recorded on a calibration log sheet at the sampling site. Both end caps of a labeled solid sorbent tube will be removed using a tube breaker/capper and inserted into the tube holder. The sampling train will be assembled. It will consist of high-flow pump with tygon tubing connected to a tube holder. After assembly, the sampling pump with sampling train attached, with the addition of a moisture trap will be checked for the desired calibration.

The pre-sampling flowrate (Q_{pre}) will be determined using the electronic bubble-tube calibrator based on the average result of three measurement trials and recorded on the calibration log sheet.

The tube holder containing a labeled sorbent tube will be positioned vertically and attached to a step ladder approximately 1.5 m above the floor for area sampling.

At the sampling site, the sampling pump will be turned "ON" and start time recorded. After a specified time, the pump will be turned "OFF" and stop time recorded. After sampling, the sampling train will be removed from the worker and the post-sampling calibration flow rate (Q_{post}) data obtained and the data recorded on the calibration log sheet. Q_{post} will be checked to make sure its value is within 10% of Q_{pre}. The average flow rate (Q_{avg}) will be calculated based on the average of the pre- and post- sampling flow rates and recorded on the calibration log sheet. Q_{avg} becomes the actual flow rate in the field (Q_{act}) and is corrected in the field to standard flow rate (Q_{std}), where standard temperature and pressure equal 25° C (298 Kelvin (K)) and 760 mm Hg (Pressure (P), respectively. Q_{std} is calculated from the following equation and the value recorded on the calibration log sheet:

$$Q_{std} = Q_{act} \times (298/T) \times (P/760)$$

The sorbent tube will be removed from the holder, the label checked and the end caps placed in position and custody sealed, wrapped in protective covering, and placed in a cooler filled with blue ice right-side-up. The blue ice will maintain storage temperatures of about 4 °C during shipment to the laboratory. A Chain-of-Custody form will be completed and attached to the cooler.

One set of negative controls (field blanks) for every ten collected samples will be prepared. A set of negative controls will be prepared by assembling the sampling train with an opened sorbent tube inserted into the tube holder, followed by removal of the sorbent tube without activating the sampling pump.

4.4.2 Sample Analysis

At the laboratory, the samples will be analyzed per NIOSH Method 1500, 1501 and 1003 using a Gas Chromatography Flame Ionization Detector (GC/FID). If necessary, additional analysis will be completed using a Mass Spectrometry (MS). The analysis will be completed in accordance with Lyle Environmental Management, Inc., Standard Operating Procedure (SOP) titled Organic Compounds on Charcoal Tubes (SOP, 1993).

The concentration (C), of analyte in the air volume sampled (V) in L will be calculated from the following equation:

$$C\ (mg/m^3) = \frac{[W_f\ (mg) + W_b\ (mg) - B_{fb}\ (mg)] \times 10^3}{V\ (L)}$$

where:

C = concentration of analyte in air, in mg/m^3
W_f = mass of analyte found in the sample front, in mg
W_b = mass of analyte found in the sample back (if any), in mg
B_{fd} = mass of analyte found in the blank front minus the blank back, in mg
V = volume of air sampled, in L

During sample analysis, if $W_b > W_f/10$, the analytical laboratory will report breakthrough and possible sample loss.

4.4.3 Data Analysis

The laboratory will report analysis results in mg/m^3 for each detected constituent.

5.0 COMPLETION REPORT

The Cleveland Senior Safety Supervisor is responsible for preparing a summary report on results of all time-integrated industrial hygiene sampling results and recommended

follow-on sampling requirements. Refer to the SSHP document section 13.5. This summary report shall be integrated into the pilot scale project completion report.

6.0 REFERENCES

American Industrial Hygiene Association (AIHA) 1996 Andersen multi-hole impactor samplers. In: Dillion, H.K.; Heinsohn, P.A.; and Miller, J.D., eds., Field Guide for the Determination of Biological Contaminants in Environmental Samples: Section 4. Viable air sampling instruments: description and operating procedures. AIHA, Fairfax, Virginia, pp. 82-85.

Bisesi, M.S. and Kohn, J.P. 1995 Industrial Hygiene Evaluation Methods. Lewis Publishers (CRC Press, Inc.), Boca Raton, FL., pp 15-1-15-5.

MICRO-ID. 1989 Microbiological identification system users manual. Durham, NC., Organon Teknika Corporation.

Nevalainen, A.; Willeke, K.; Liebhaber, F.; Pastuszka, J.; Burge, H.; and Henningson, E. 1993 Bioaerosol sampling. In: Willeke, K., and Baron, P.A., eds., Aerosol Measurement: Principles, Techniques and Applications. New York, Van Nostrand Reinhold, pp. 471-474.

Occupational Safety and Health Administration (OSHA) 1983 Method number 44 for 2,4-Dinitrotoluene (DNT) and 2,4,6-Trinitrotoluene. In: OSHA Computerized Information System (OCIS), Analytical Methods, http:// 198.17.175.40/ SLTC/ methods.html

OSHA Chemical Sampling Information (CSI) 1996 Chemical sampling information for Cyclonite, HMX, and 2,4,6-Trinitrotoluene. In: OSHA Computerized Information System (OCIS), Chemical Sampling Information, http:// 198.17.175.40/ OCIS/ toc.chemsamp.html

Rock, J.C. 1995 Occupational air sampling strategies. In: Cohen, B.S. and Hering, S.V., eds., Air Sampling Instruments for evaluation of atmospheric contaminants. Cincinnati, Ohio, American Conference of Governmental Industrial Hygienists (ACGIH), pp. 21-29.

Site Safety and Health Plan (SSHP) 1997 Task-specific site safety and health plan, pilot scale, soils bioremediation facility. North Charleston, South Carolina, Morrison Knudsen Corporation.

Standard Operating Procedure (SOP) CH-17. 1995 Explosive residue analysis on OVS-2 (XAD-2) adsorption tubes. Lyle Environmental Management, Inc.

Standard Operating Procedure (SOP). 1996 Yeast and mold count. Lyle Environmental Management, Inc., Document Number #369-72.

Standard Operating Procedure (SOP). 1993 Organic compounds on charcoal tubes. Lyle Environmental Management, Inc.

Standard Operating Procedure (SOP). 1991 Metals in air. Lyle Environmental Management, Inc.

SKC Inc. 1997 Comprehensive catalog and air sampling guide. Eighty Four, PA., SKC Inc., p. 29.

USEPA SW846. 1994 Test methods for the evaluation of solid waste. Washington DC. United States Environmental Protection Agency, Volume 1, Section B, Method 8330.

6.0 ATTACHMENTS

1. Calibration Data Form: Low, High, and Multi-Flow Sampling Pumps.

2. Field Monitoring Data Form: Integrated Monitoring for Particulates, Gases, Vapors, or Bioaerosols.

3. Chain Of Custody Record.

MORRISON KNUDSEN CORPORATION
NAVFAC SOUTHERN DIVISION

Attachment 1. Calibration Data Form: Low, High, and Multi-Flow Sampling Pumps

Name and Location of Calibration: _____

Calibration Conducted By: _____ Date Calibration Conducted: _____

Calibration Instrument (Type/Manufacturer/Model): _____

Air Sampling Pump (Type/Manufacturer/Model): _____

Collection Medium In Line: _____ Calibrator Volume: _____

Air Temperature: _____ °C Air Pressure: _____ mm Hg Relative Humidity: _____ %

Pump No.	Pre-Sampling Calibration Flow Rate (Q_{pre})					Post-Sampling Calibration Flow Rate (Q_{post})					Avg. Flow Rate
	Q (units)				Q_{pre}	Q (units)				Q_{post}	Q_{avg}
	Q_1	Q_2	Q_3	Q_{avg}	/min	Q_1	Q_2	Q_3	Q_{avg}	/min	/min

Calibration Notes:

MORRISON KNUDSEN CORPORATION
NAVFAC SOUTHERN DIVISION

Attachment 2. Field Monitoring Data Form: Integrated Monitoring for Particulates, Gases, Vapors, or Bioaerosols

Facility Name and Location: _____ Contaminant Sampled: _____

Monitoring Conducted By and Date: _____ Collection Media: _____

Monitoring Instrument (Type/Manufacturer/Model): _____

Air Temperature: _____ °C Air Pressure: _____ mm Hg Relative Humidity: _____ %

Identification of Personnel or Area	Field Sample ID No.	Pump No.	Pre-Sample Calibration Flow Rate	Post-Sample Calibration Flow Rate	Average Flow Rate (Q)	Sample Start-Time	Sample Stop Time	Total Sample Time (T)	Volume Sampled (Vol)

Field Notes:

1.0 PURPOSE

This procedure describes the occupational noise monitoring and sampling strategy and the material and methods which will be used for occupational noise monitoring and sampling.

2.0 SCOPE

This procedure applies to the Naval Surface Warfare Center, Crane, Indiana site for Bioremediation Facility pilot scale operations. Occupational noise monitoring is specified in Section 7.2.4 of the Task-Specific Site Safety and Health Plan (SSHP) document (SSHP, 1997).

3.0 BACKGROUND

Noise:

a. Loud, prolonged noise can cause loss of hearing, pain, nausea, and reduced muscular control. In addition, it interferes with communication, disrupts concentration, and can be annoying to those within range.

b. Maximum noise level limits for various lengths of exposure are established by OSHA. Noise exposures in general industry which are found to be above 85 decibels (50% dose) as an 8 hour time-weighted average require the implementation of an effective hearing conservation program (see 29 CFR 1910.95(c)). 85 dB(A) is referred to as the action level. 90 dB(A) is the Permissible Exposure Limit (PEL) for 8 hours.

c. The PEL for construction operations is also 90 dB(A), however, a hearing conservation program is not required by law. Feasible engineering or administrative controls need to be considered as well as training in the use of personal protective equipment (see 29 CFR 1926.101 and 1926.52).

Note: MK will apply the requirements of the OSHA General Industry to this project.

4.0 NOISE SAMPLING STRATEGY

4.1 WALKAROUND SURVEY

When screening for noise exposures, only sound level meter measurements and estimates of exposure duration need to be calculated. These spot readings are used to determine the need for a more complete evaluation.

4.2 WORKSHIFT SAMPLING

Whenever the results of the walkaround survey indicate the OSHA noise standard may be exceeded, sample representative employees using an audio dosimeter from each job classification who may be exposed above the limit.

5.0 MATERIAL

The following material (equipment) will be used for occupational noise monitoring: Ametek Mark-3 Audio Dosimeter or equivalent instrument.

The Ametek Mark-3 Audio Dosimeter can be used in either the sound level survey mode for walkaround surveys or the noise dosimeter mode for workshift sampling.

6.0 METHODS

The following methods will be used for occupational noise monitoring. Walkaround surveys will be documented using Attachment I form and workshift sampling using Attachment II and III forms. The instrument shall be calibrated before and after use.

6.1 CALIBRATION

Turn the unit on, and check the battery status. If the battery is low it should be fully charged before use.

Remove the windscreen from the microphone. Carefully insert the microphone in the coupler and place the coupler in the calibrator. Make sure the microphone is inserted all the way in the coupler and that the coupler

rests flush on the inner rim of the calibrator. Turn the calibrator on.

Check the battery indicator and replace the battery if required. Make sure the calibrator is producing a tone.

Atmospheric pressure generally has little effect on most dosimeters. The calibrator sound levels are affected by altitude and if calibrated at high altitudes, corrections must be made. The correction is -.1 dB for every 2000 feet in elevation.

Refer to the manufacturer's instructions for further directions.

The dosimeter must be calibrated before and after each use.

If the before and after calibration vary by more than 5%, then the data is to be considered suspect. "Suspect data" is to be documented in the comments section of the data sheet located on Attachment I and II of this procedure.

6.2 WALKAROUND SURVEYS

Walkaround surveys shall be completed for each major piece of powered equipment during normal operations. Equipment requiring surveys include the farm tractor; farm tractor and grinder/mixer; center pivot wheel loader; windrow turner; semi-tractor; semi-tractor and live-bottom trailer with dump conveyor in operation; and screener.

Walk-around surveys shall also include interior cab measurements where appropriate. Walkaround surveys shall be documented using Attachment I. The following instructions are provided for completing Attachment I. Refer to Attachment I.

1. The name of the project is recorded here.

2. The date the survey was taken is filled in here.

3. The person doing the survey signs here.

4. The manufacturer of the sound level meter is recorded here.

5. The specific serial number that identifies the instrument is filled in here.

6. The manufacturer of the calibrator is recorded here.

7. The serial number that identifies the calibrator is filled in here.

8. The initial calibration is recorded here.

9. The final calibration is recorded here.

10. The test number (reference number) being done.

11. The location and description of the equipment or area the survey is being done on are recorded here.

12. The distance from noise source.

13. The actual readout on the slow response, A weighted network is recorded here.

14. Is hearing protection required or not?

15. Any comments on the work conditions or environmental are recorded here.

16. A drawing of the area or equipment is put here.

6.2 WORKSHIFT SAMPLING

Based on the results of the walk-around surveys, if the MK SSHO suspects that an employee may be exposed to noise levels exceeding the OSHA PEL, then workshift sampling of the affected employee shall be completed. Workshift sampling shall be documented using Attachment II. The following instructions are provided for completing Attachment II. Refer to Attachment II.

1. Record the date the sample was taken here.
2. Record the sample identification number here.
3. Fill in the person that was sampled here.
4. Write the person's social security number here.
5. The person's job description is entered here.
6. The work area that the person will spend most of his/her time.
7. The type of dosimeter used for the sampling.
8. The specific serial number to identify the dosimeter used.
9. On instruments manufactured by Quest, the dosimeter threshold is 80 dB(A).
10. Write what the dosimeter calibration was: Note that the instrument must be calibrated before and after each use.
11. Record the calibrator model here.
12. Record the calibrator serial number here.
13. Check the battery of the dosimeter.
14. The time the dosimeter was placed on the person.

15. The time the dosimeter was taken off the person.

16. The total number of hours sampled off the dosimeter.

17. The average readout from the dosimeter is recorded here.

18. The percentage readout off the dosimeter.

19. The maximum value recorded on the dosimeter is written here.

20. Put a check mark here if the maximum value was over 115 dB(A), or if it was not over 115.

21. Record the over limit value from the noise dosimeter here.

22. Note here whether operation of the dosimeter was normal or not, and if it was not normal, a description of the circumstances.

23. The type of hearing protection is recorded here, and the percentage of the worker's shift that the person was wearing the hearing protection.

24. Note the approximate temperature for the sample period here.

25. Note the weather conditions.

26. Check the wind speed and judge its severity.

27. Write any general descriptions of the work, conditions of work, or other comments in this space.

28. Fill in the number of total hours in the worker's shift.

29. The person doing the sampling signs here.

At the conclusion of the workshift sampling using the dosimeter, the MK SSHO will prepare a noise dosimetry industrial hygiene sample summary worksheet found in Attachment III. The following instructions are provided for completing Attachment III. Refer to Attachment III.

1. The name of the site will be recorded here.

2. The person preparing the summary sheet signs here.

3. The date the summary was prepared is filled in here.

4. The date, model and serial number of the calibrator go here. If daily calibrations are done, then they should be written in here.

5. If the basis is the Permissible Exposure Limit (PEL), it goes here.

6. If the basis is the TLV, it goes here.

7. The page number of the sheet being worked on goes here.

8. The total number of sheets is recorded here.

9. The number of hours worked per shift is recorded here.

10. The date the sample was done is recorded here.

11. Enter the number to identify the sample here. Start a numbering system for the site specific locations. An example would be:

    a. DS - Disposal Site
    b. PS - Processing Site
    c. HR - Haul Road
    d. VP - Vicinity Property

example: DU-HR-002

12. The name of the person or area sampled is recorded here.

13. The person's social security number is recorded here.

14. The piece of equipment that the person was on, or the area of work that the person was in, will be recorded here.

15. The specific site area that the person was in, is recorded here.

16. The type of hearing protection is recorded here.

17. The percentage of the worker's shift that the person had the hearing protection on.

18. The model name of the dosimeter used.

19. The specific serial number to identify the dosimeter used.

20. The limiting value that the dosimeter can receive. On the quest instruments it is 80 dB(A).

21. The run time recorded by the dosimeter.

22. The over limit time recorded by the dosimeter.

23. The maximum level recorded on the dosimeter is written here.

24. The percent dose readout off the dosimeter.

25. The average dB(A) readout from the dosimeter is recorded here.

26. The full shift percent dose of the shift that was recorded,

i.e., if the person was sampled for 6 hours and the full shift was 8 hours, and the readout percentage was 76.2%, then the full shift percent dose is:

$$Percent\ Dose\ x\ \frac{Full\ Shift\ (hr)}{Hours\ Sampled} = 76.2\%\ x\ \frac{8\ hr}{6\ hr} = 101.6\%$$

Note: If the sample is longer than the scheduled shift, then the percent dose equals the full shift percent dose.

Note: Convert partial hours to decimal fraction. Example: 6 hours, 20 minutes = 6.33 hours.

7.0 COMPLETION REPORT

The MK Field SSHO is responsible for preparing a summary report on results of all occupational noise monitoring results. Refer to the SSHP document section 13.5. This summary report shall be integrated into the pilot scale project completion report.

8.0 REFERENCES

MK 1994 Industrial hygiene procedures manual. Cleveland, Ohio, Morrison Knudsen Corporation.

Site Safety and Health Plan (SSHP) 1997 Task-specific site safety and health plan, pilot scale, soils bioremediation facility. North Charleston, South Carolina, Morrison Knudsen Corporation.

9.0 ATTACHMENTS

I. Sound Level Survey

II. Noise Dosimetry Sample Field Sheet

III. Noise Dosimetry Industrial Hygiene Sample Summary

ATTACHMENT I
PAGE 1 OF 2
SOUND LEVEL SURVEY

Location: 1 Date: 2

Prepared By: 3

Sound Level Meter: 4 Serial #: 5

Calibrator: 6 Serial #: 7

Calibration: Initial 8 Final 9

Test No.	Description Location/Equipment	Distance	dB(A)	Hearing Protection Required Y	N	Comments
10	11	12	13	14	14	15

Drawing of equipment or work layout
Reference Numbers refer to the Test Number above

16

ATTACHMENT I
PAGE 1 OF 2
SOUND LEVEL SURVEY

Location: VP-087 : Rifle, CO Date: 10/15/90

Prepared By: M. Doyon

Sound Level Meter: Quest 215 Serial #: M8080776

Calibrator: Quest CA-12B Serial #: U8090044

Calibration: Initial 110 dB(A) Final 110 dB(A)

Test No.	Description Location/Equipment	Distance	dB(A)	Hearing Protection Required Y	N	Comments
1	Schmeuser (subcontractor)	0'	104-108	Y		Operator Distance
2	Using Guzzler	1'-3'	96-98	Y		from hose
3	Vacuum Truck	10'-15'	80-84		N	
4	From Vac-n-Jet	>30'	74-76		N	

Drawing of equipment or work layout
Reference Numbers refer to the Test Number above

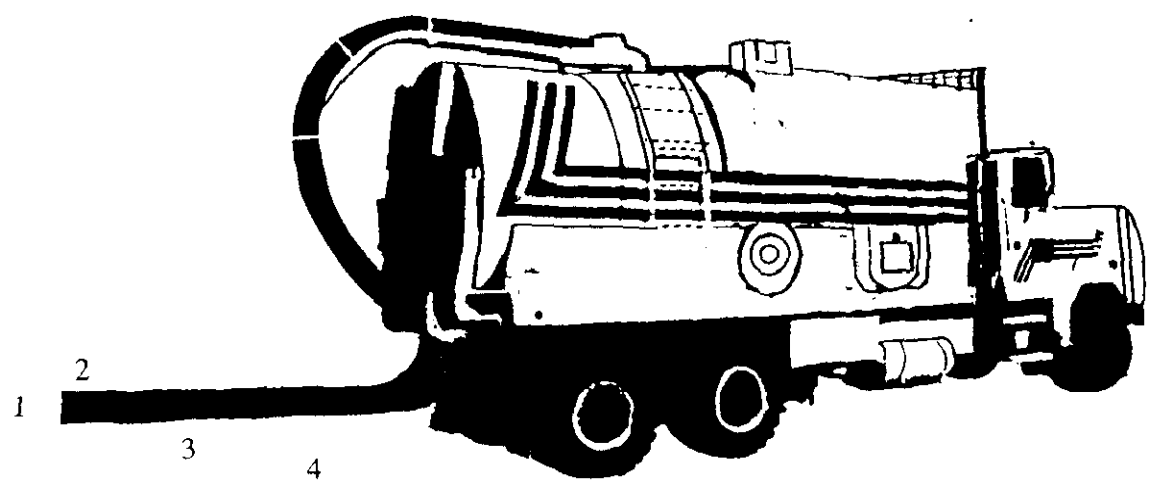

ATTACHMENT I
PAGE 1 OF 2
SOUND LEVEL SURVEY

Location: _____ Date: _____

Prepared By: _____

Sound Level Meter: _____ Serial #: _____

Calibrator: _____ Serial #: _____

Calibration: Initial Final

Test No.	Description Location/Equipment	Distance	dB(A)	Hearing Protection Required Y	N	Comments

Drawing of equipment or work layout
Reference Numbers refer to the Test Number above

ATTACHMENT I
PAGE 2 OF 2
SOUND LEVEL SURVEY

Test No.	Description Location/Equipment	Distance	dB(A)	Hearing Protection Required Y	N	Comments
10	11	12	13	14	14	15

ATTACHMENT I
PAGE 2 OF 2
SOUND LEVEL SURVEY

Test No.	Description Location/Equipment	Distance	dB(A)	Hearing Protection Required Y	N	Comments

EQUIPMENT DIAGRAMS

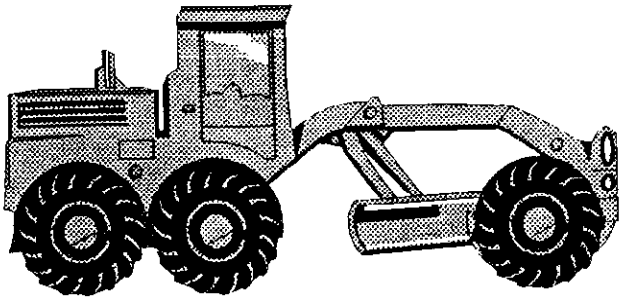

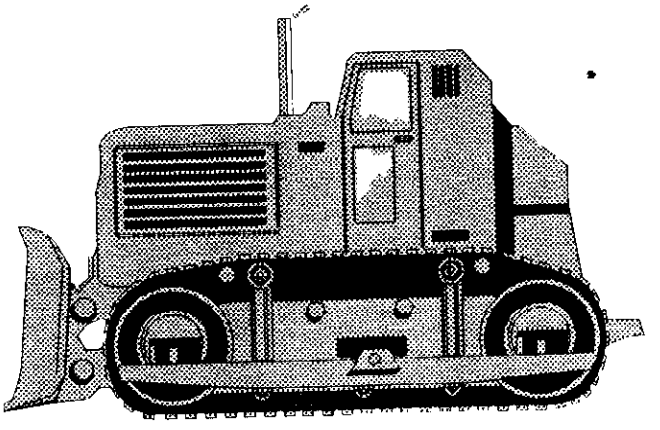

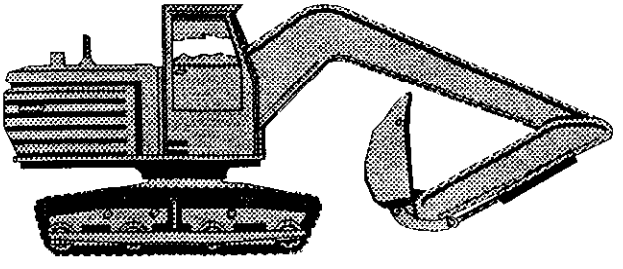

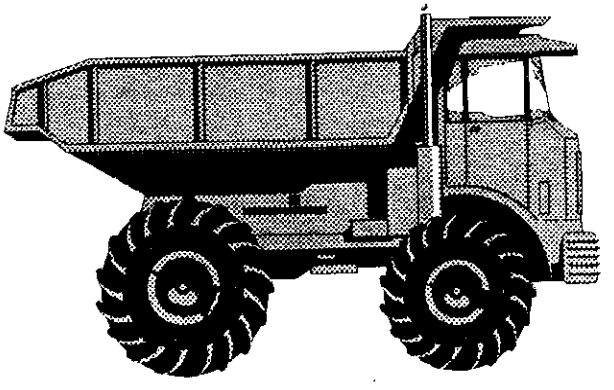

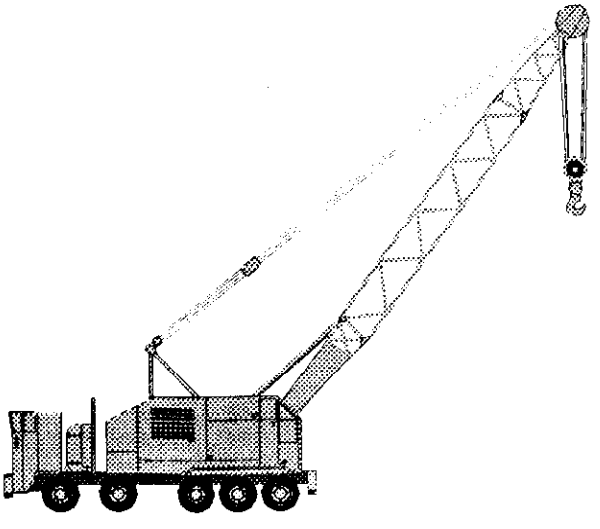

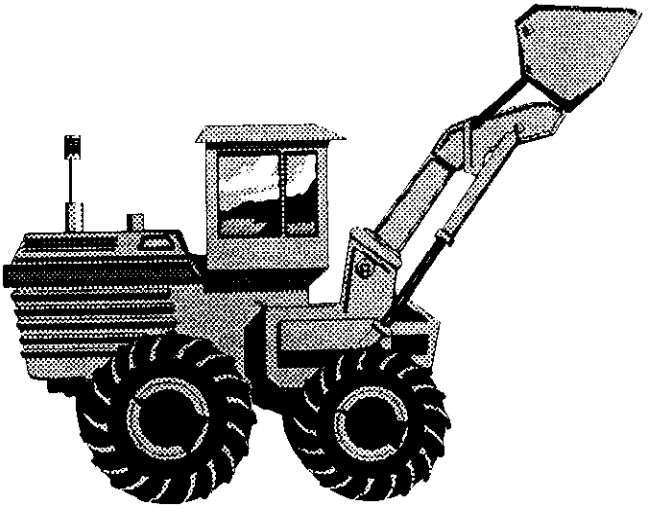

EQUIPMENT DIAGRAMS

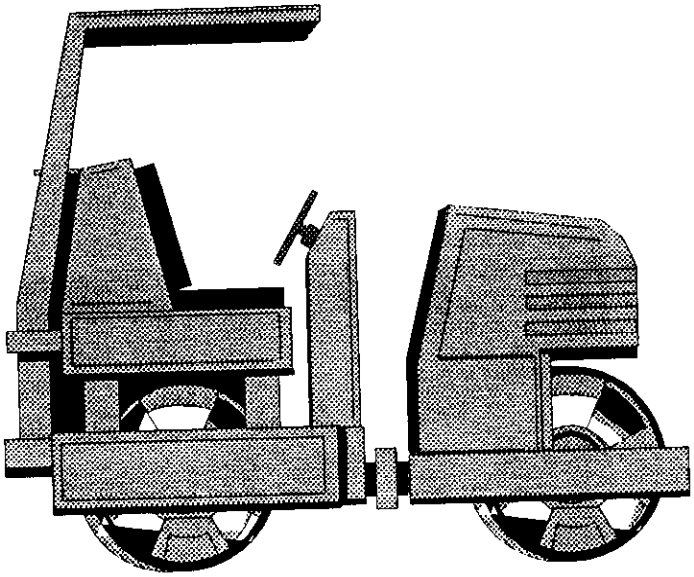

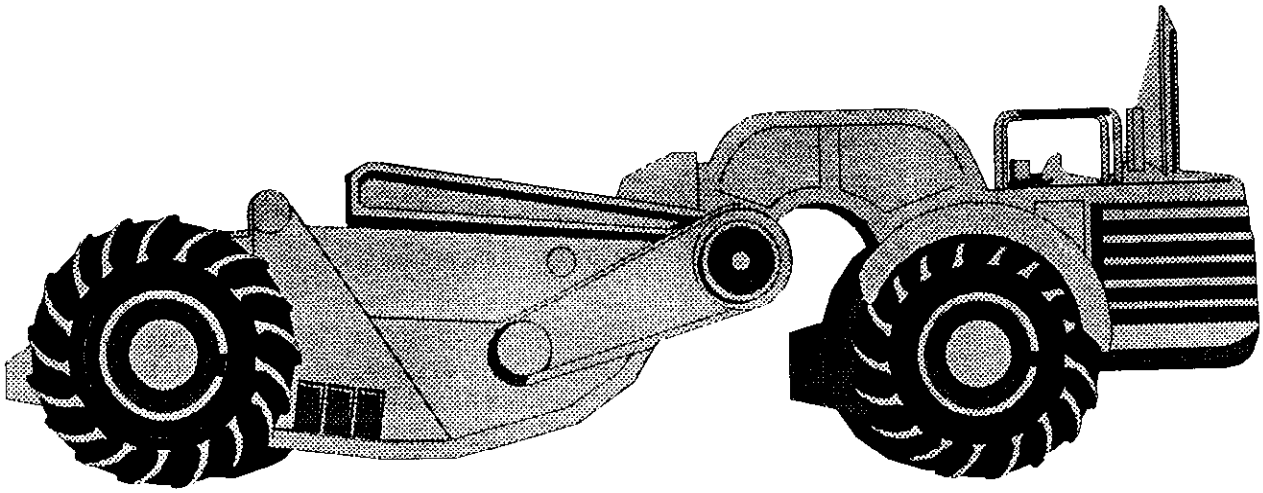

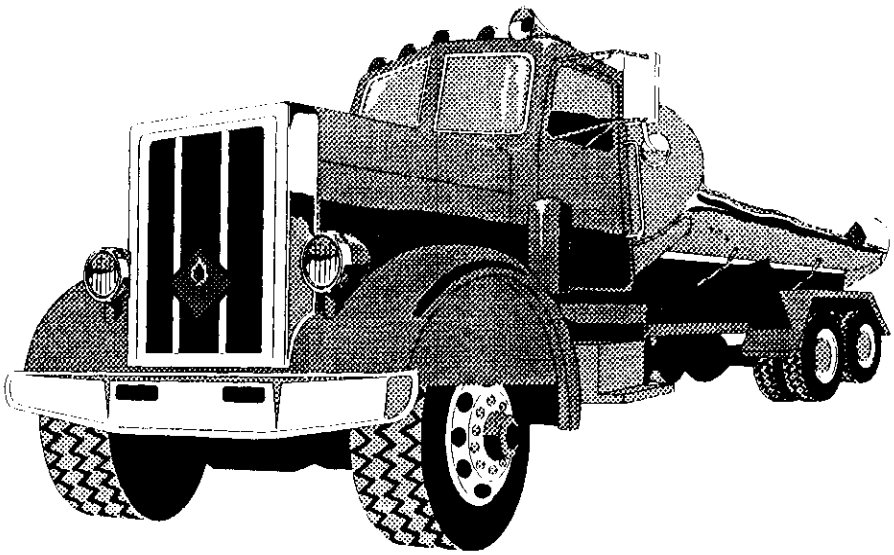

EQUIPMENT DIAGRAMS

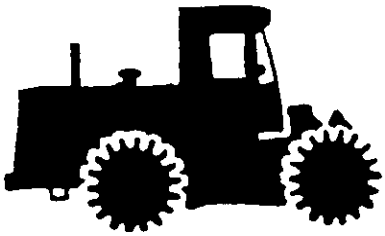

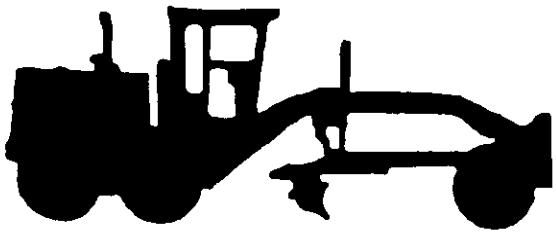

EQUIPMENT DIAGRAMS

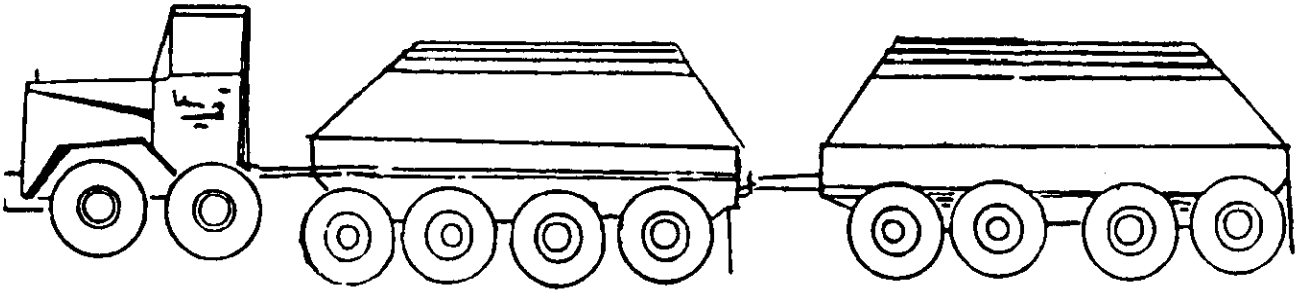

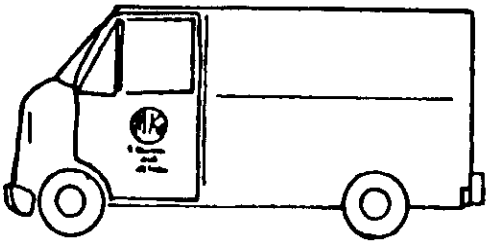

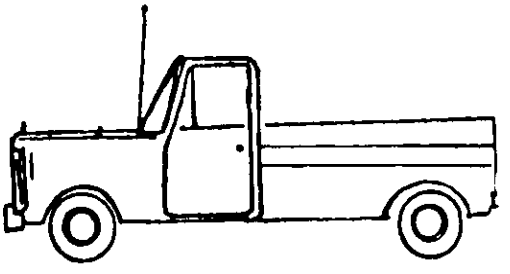

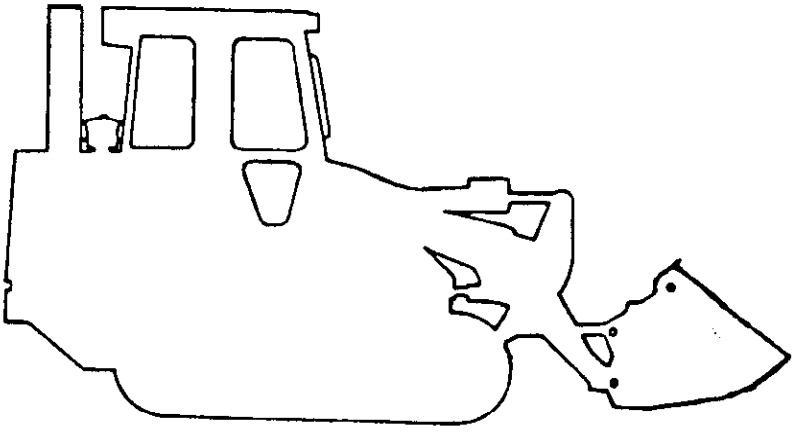

EQUIPMENT DIAGRAMS

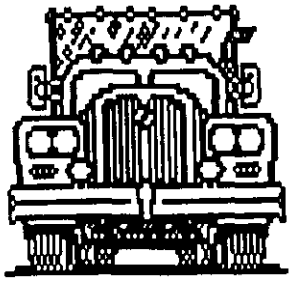

No. 4Z308
12" Dia.
Wheel

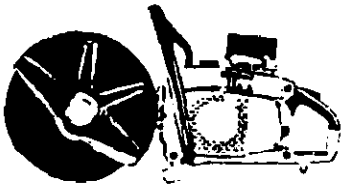

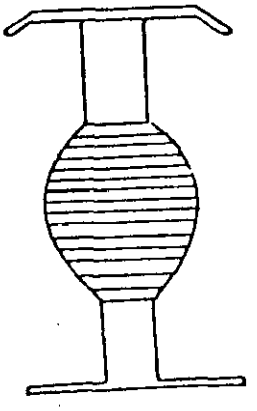

portable cutoff saws feature 2-cycle engine with Walbro diaphragm type all position carburetor. Triple, oiled foam type air filter, transistorized electronic ignition, 6 point floating engine type anti-vibration system, adjustable steel blade guard. Includes 2 blades; one for concrete, one for steel.

No. 4Z308 Has 12" Wheel Diameter and cutting depth of 4.0". 6300 *RPM maximum wheel speed.*

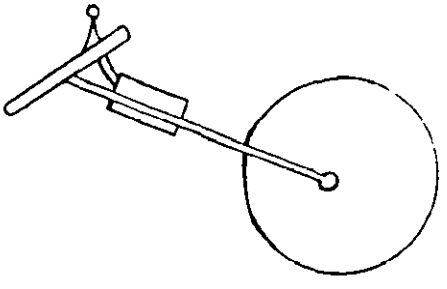

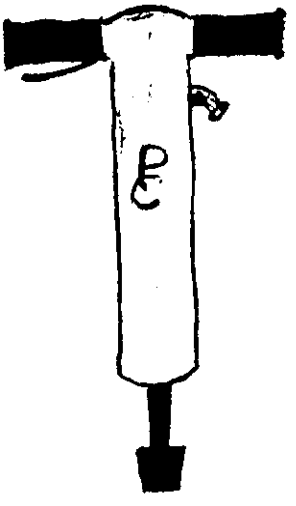

EQUIPMENT DIAGRAMS

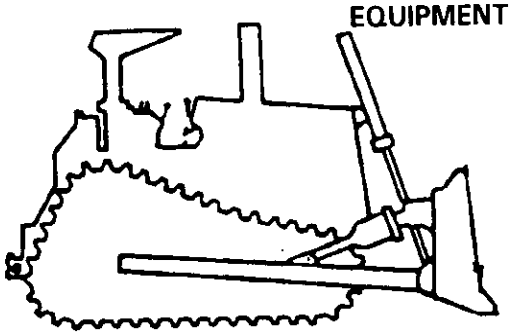

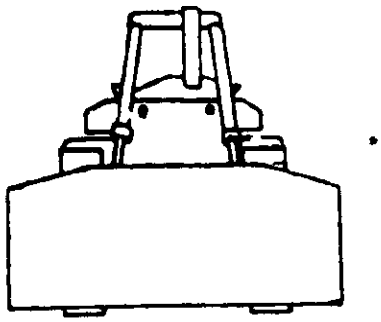

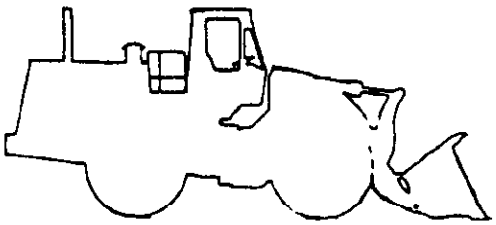

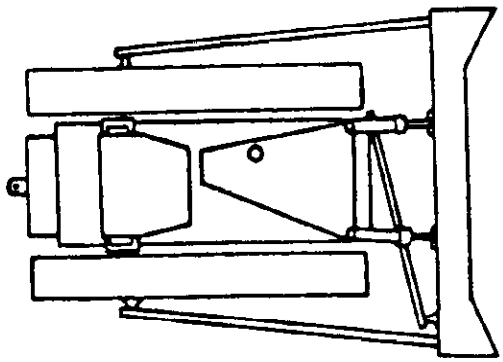

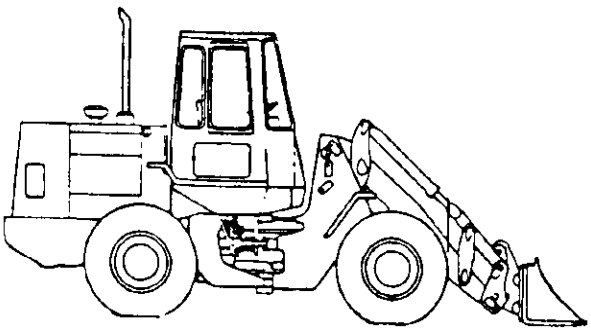

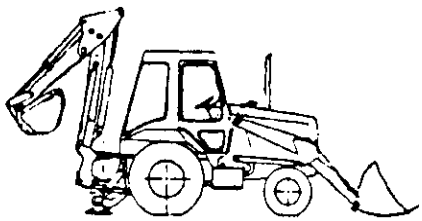

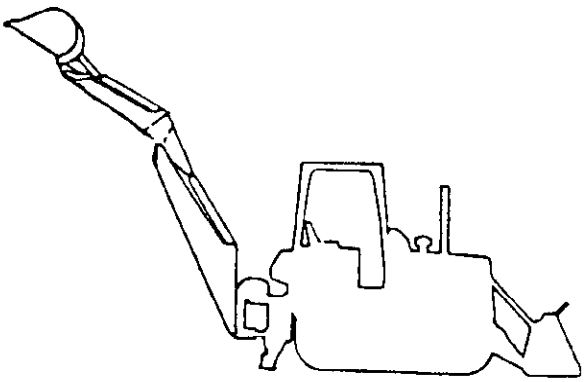

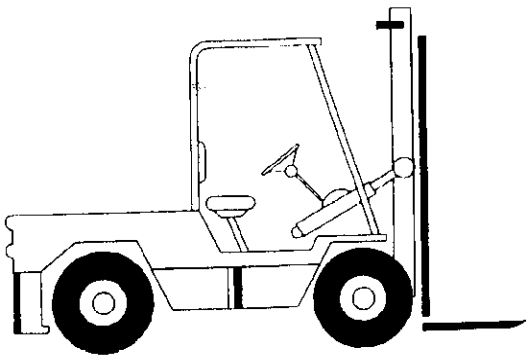

EQUIPMENT DIAGRAMS

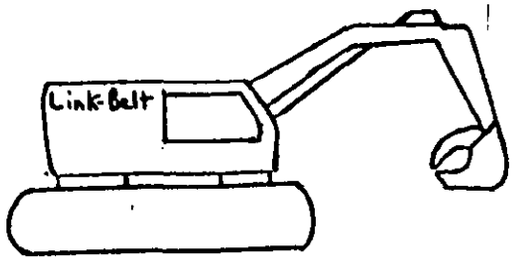

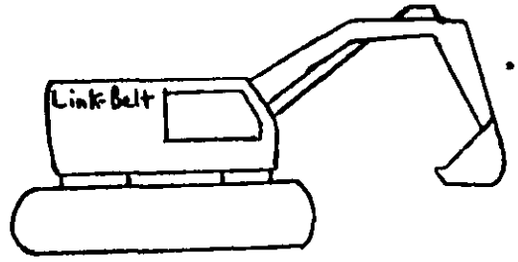

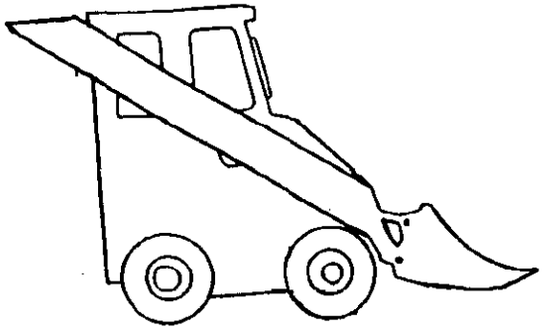

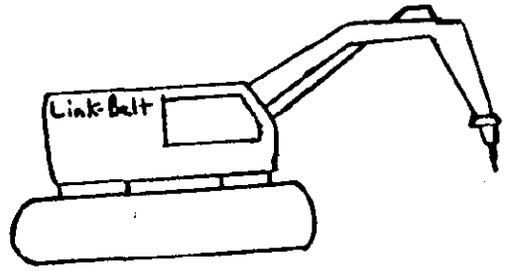

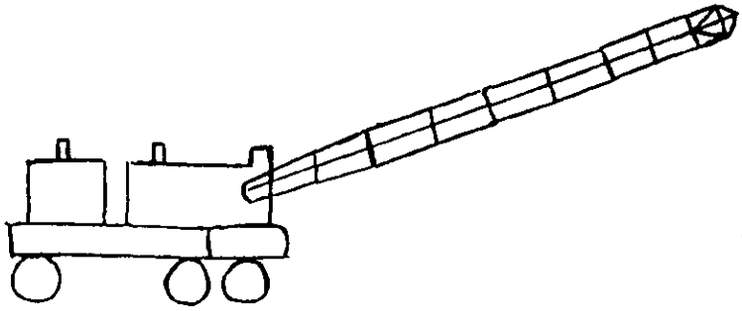

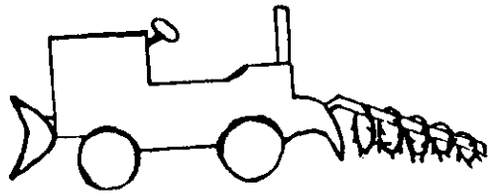

EQUIPMENT DIAGRAMS

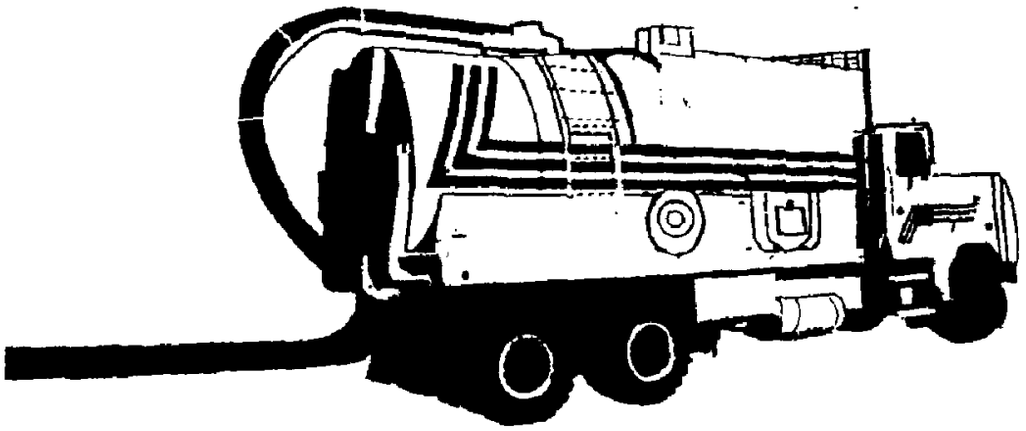

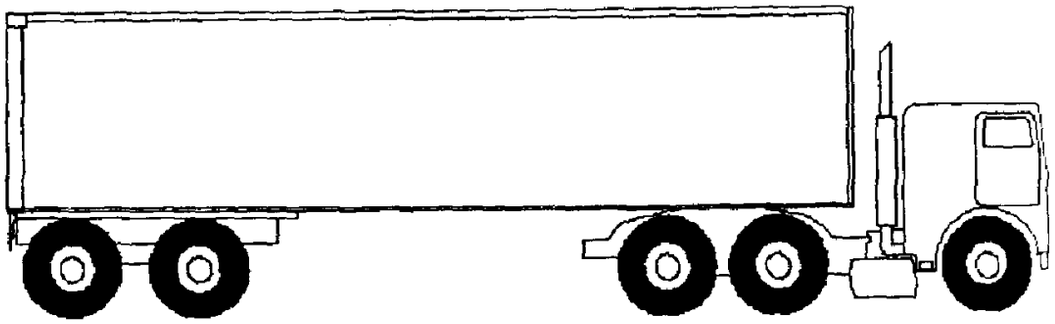

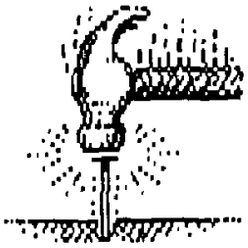

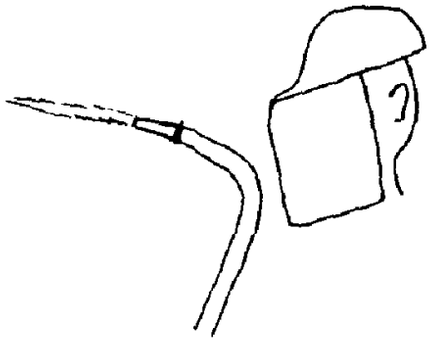

ATTACHMENT II

NOISE DOSIMETRY SAMPLE FIELD SHEET

Sample I.D.: Date: 1

Sample I.D. #: 2

Name, Person Sampled: 3 SS#: 4

Job: 5 Work Location: 6

Dosimeter - Model: 7 Serial #: 8 Dosimeter Threshold: 9 dB(A)

Calibration: Initial 9 Final: 10

Calibrator: 11 Serial #: 12 Battery Check: 13

Dosimeter Information - Time On: 14 Time Off: 15 Run Time: 16

Avg: 17 Dose%: 18 Max: 19 O.L.: 21

Over 115 dB(A)? Yes 20 No

Workplace Conditions:

Operations: Normal 22 Abnormal Explain

Hearing Protection - Type: 23 % of Time Worn:

Weather Conditions:

Approximate Temperature: 24 °F

Sky: Precipitation 25 Cloudy Partly Cloudy Clear

Wind: Calm 26 Light Medium High

Work Description/Comments: 27

Scheduled Hours per Shift: 28

Sampled By: 29

ATTACHMENT II

NOISE DOSIMETRY SAMPLE FIELD SHEET

Sample I.D.: Date: 1/31/92

Sample I.D. #: DU-HR-002-DW

Name, Person Sampled: J. Doe SS#: 999-99-9999

Job: Laborer Work Location: Parking Lot

Dosimeter - Model: Quest Micro-14 Serial #: M8020000 Dosimeter Threshold: 80 dB(A)

Calibration: Initial 109.7 dB(A) Final: 109.6 dB(A)

Calibrator: Quest 215 Serial #: U7020000 Battery Check: yes

Dosimeter Information - Time On: 08:00 Time Off: 16:00 Run Time: 8:00.0

Avg: 85 Dose%: 50 Max: 95 O.L.: 0:00

Over 115 dB(A)? Yes ___ No X

Workplace Conditions:

Operations: Normal X Abnormal ___ Explain ___

Hearing Protection - Type: EAR -NRR/29 % of Time Worn: 100

Weather Conditions:

Approximate Temperature: 65 °F

Sky: Precipitation ___ Cloudy X Partly Cloudy ___ Clear ___

Wind: Calm ___ Light X Medium ___ High ___

Work Description/Comments: Worker shoveling gravel, wind conditions light.

Scheduled Hours per Shift: 8

Sampled By: Signature Here

ATTACHMENT II

NOISE DOSIMETRY SAMPLE FIELD SHEET

Sample I.D.: Date: _____

Sample I.D. #: _____

Name, Person Sampled: _____ SS#: _____

Job: _____ Work Location: _____

Dosimeter - Model: _____ Serial #: _____ Dosimeter Threshold: ___ dB(A)

Calibration: Initial _____ Final: _____

Calibrator: _____ Serial #: _____ Battery Check: _____

Dosimeter Information - Time On: _____ Time Off: _____ Run Time: _____

Avg: _____ Dose%: _____ Max: _____ O.L.: _____

Over 115 dB(A)? Yes ____ No ____

Workplace Conditions:

Operations: Normal ____ Abnormal ____ Explain _____

Hearing Protection - Type: _____ % of Time Worn: _____

Weather Conditions:

Approximate Temperature: _____ °F

Sky: Precipitation _____ Cloudy _____ Partly Cloudy _____ Clear

Wind: Calm ____ Light ____ Medium ____ High ____

Work Description/Comments: _____

_____

_____

_____

_____ Scheduled Hours per Shift: _____

Sampled By: _____

MORRISON KNUDSEN CORPORATION
ENVIRONMENTAL SERVICES GROUP

CHAIN OF CUSTODY RECORD

Laboratory:		Project Number:	Project Name:
Task Number:	Task Name:	Airbill Number:	Custody Seal Number(s):
Samplers Signature:			

Site Number	Date	Time	Sample Identification	Site Description	No. of Cont.	Analyses Requested	Remarks

Relinquished by: (Sig.)	Secured by: (Sig.)	Date: Time:	Received by: (Sig.)	Relinquished by: (Sig.)	Date: Time:
Received by: (Sig.)	Relinquished by: (Sig.)	Date: Time:	Received by: (Sig.)	Relinquished by: (Sig.)	Date: Time:
Received by L[illegible]ory by: (Sig.)	Date: Time:	Remarks			

Orig[illegible] [illegible]ompanies shipment.

#1799a/88

ATTACHMENT III

NOISE DOSIMETRY INDUSTRIAL HYGIENE SAMPLE SUMMARY

IDENTIFICATION

Location: 1

Prepared By: 2

Date Prepared: 3

GENERAL INFORMATION

Calibrator: 4

Exposure Limit:

OSHA-PEL 5 ACGIH-TLV 6

Page 7 of 8

Scheduled Hours Per Shift 9

Date / Sample #	Name or Area / Soc. Sec. #	Job Description		Hearing Protection		Dosimeter			Run Time Hr:Min:Sec	Over Limit Min:Sec	Max Level	% Dose	Avg dB(A)	Full Shift % Dose
		Classification	Location	Type	% Use	Model	Serial #	Thr						
10	12	14	15	16	7	18	19	20	21	22	23	24	25	26
11	13													

ATTACHMENT III

NOISE DOSIMETRY INDUSTRIAL HYGIENE SAMPLE SUMMARY

IDENTIFICATION

GENERAL INFORMATION

Location: Albuquerque, NM

Calibrator: Quest 215, U802000

Page 1 of 1

Prepared By: Your Signature

Exposure Limit:

Scheduled Hours Per Shift 8

Date Prepared: 1/31/92

OSHA-PEL 90 ACGIH-TLV

Date / Sample #	Name or Area / Soc. Sec. #	Job Description: Classification	Job Description: Location	Hearing Protection: Type	Hearing Protection: % Use	Dosimeter: Model	Dosimeter: Serial #	Dosimeter: Thr	Run Time Hr:Min:Sec	Over Limit Min:Sec	Max Level	% Dose	Avg dB(A)	Full Shift % Dose
1/31/92	J. Doe	Laborer	Parking Lot	EAR NRR-29	100	Quest u-14	M8020000	80	8:00.0	0.00	95	50	85	50
DU-HR-002-DW	999-99-9999													

ATTACHMENT III

NOISE DOSIMETRY INDUSTRIAL HYGIENE SAMPLE SUMMARY

IDENTIFICATION

Location: _____

Prepared By: _____

Date Prepared: _____

GENERAL INFORMATION

Calibrator: _____

Exposure Limit:

OSHA-PEL _____ ACGIH-TLV _____

Page ___ of ___

Scheduled Hours Per Shift ___

Date	Name or Area	Job Description		Hearing Protection		Dosimeter			Run Time Hr:Min:Sec	Over Limit Min:Sec	Max Level	% Dose	Avg dB(A)	Full Shift % Dose
Sample #	Soc. Sec. #	Classification	Location	Type	% Use	Model	Serial #	Thr						

1.0 PURPOSE

This procedure describes the methods which will be used to measure bacteria in windrowed soil.

2.0 ESTABLISH SAMPLING AND MONITORING LOCATIONS

Field SOP 1.0 describes the procedure to be followed for establishing the field measurement locations.

2.1 Establish Field Measurement

Each windrow shall be sampled at the four cross-sections from the central deep location. Each of these samples shall be evaluated for bacteria types and counts using the attached procedure. Only one sampling event shall occur per week to test for the bacteria.

3.0 Analysis Results

Data shall be charted on a weekly basis documenting the bacteria counts and types per windrow. An evaluation shall made on the bacteria effects on degradation rates.

RETEC

STANDARD METHOD FOR MICROBIAL ENUMERATIONS

Approval: _____ Date: 1-22-1991

Approval: _____ Date: 1-22-1991

1.0 SCOPE

Microbial enumerations are performed to estimate both the total number of organisms in an environmental sample, and the number of organisms capable of degrading specific compounds of interest. Microbial enumerations using plate count and most probable number (MPN) determinations provide a measure of total microbial biomass in a sample. The potential for biodegradation of chosen contaminants in a given environment may then be inferred from enumeration data. Microbial counts can also be used to assess the potential toxicity of the contaminants present at a site to microorganisms, and the response of microorganisms to alternative management practices.

Enumerations are a relatively inexpensive method of measuring the overall biological health of a given sample and for verifying the presence and abundance of specific physiological types of organisms (such as oil-or PAH-degrading organisms).

2.0 SIGNIFICANCE AND USE

Microbial enumerations may be performed to estimate the total viable microbial biomass within a given sample, to assess the potential toxicity of the contaminants present at a site, and subsequently to examine the response of microorganisms to alternative treatability practices.

Using a selective plate count technique in which an organic contaminant is incorporated into the microbiological media as the sole source of carbon and energy, specific nutritional groups of microorganisms or "specific degraders" may be enumerated. This standard method includes methods for enumerating total aerobic heterotrophic microorganisms, polynuclear aromatic hydrocarbon (PAH) degraders, volatile organic degraders and oil degraders.

3.0 MATERIALS

The following materials (in addition to standard laboratory equipment) are needed to perform microbial enumerations:

- test tubes and racks;
- pipet 0.1-1 ml;
- vortex shaker;
- petri dishes;
- autoclave;
- "hockey stick" (glass rod bent at 90° angle);
- spin plate;
- bunsen burner;
- Quebec colony counter;
- Laminar flow microbiological hood;
- media;
  - plate count agar (Difco 0479)
  - noble agar (Difco 0142)
- chemicals;
  - NaCl
  - KOH
- - chemicals for minimal salts;
  - $(NH_4)_2SO_4$ - KH_2PO_4
  - K_2HPO_4 - $MgSO_4$
  - $CaCl_2.2H_2OFe$ - $SO_4.7H_2O$
  - $CuSO_4.5H_2O$ - $CoCl_2.6H_2O$
  - $MnCl_2.4H_2O$ - $NaMoO_4.2H_2O$
  - $ZnCl_2.7H_2O$

- specific carbon sources;
  - phenanthrene
  - naphthalene
  - oil (motor oil)
  - toluene
  - biphenyl
  - salicylate
  - pentachlorophenol
  - hexadecane
  - cyclohexane
  - pristane
  - dodecane
  - butylcyclopentane

4.0 PROCEDURES

4.1 General Microbial Enumerations

The enumeration of microorganisms within a soil or aqueous sample generally requires serial dilutions of the sample into a sterile diluent solution prior to transfer to a growth medium. Since plates containing too many colony forming units (greater than 300) cannot accurately be counted, and plates with too few colony forming units (less than 30) must be discarded from the counting procedure for statistical considerations, serial dilutions are performed to ensure countable results. For soil microbial enumerations, one gram of soil is aseptically transferred to nine ml of sterile saline solution (0.85 percent). For microbial determinations in a liquid sample (slurry, water inoculum, etc.), one ml of liquid is aseptically transferred to nine ml of sterile diluent with appropriate serial dilutions following. The optimal number of colonies per plate is between 30 and 300.

After achieving the desired dilutions, spread plates are prepared by transferring a 0.1-ml aliquot of sample to the appropriate medium surface and spreading with a flame-sterilized hockey stick to evenly cover the agar surface. Sample dilutions are routinely plated in duplicate to ensure greater accuracy. The plates are incubated in an inverted position to eliminate condensation on the agar surface. Inoculated plates are generally incubated at room temperature for 48 to 72 hours. Enumeration of specific degraders usually requires

longer incubation, generally five days. After incubation, colonies are enumerated on each plate using a Quebec colony counter. To calculate the number of colony forming units per ml or gram of original sample, counts are multiplied by the inverse of the dilution factor used and then corrected for the quantity plated (see section 5.0, Calculations).

4.2 Total Aerobic Heterotrophic Microorganisms

For detection of total aerobic heterotrophic microorganisms, a general growth medium containing a source of carbon, nitrogen and phosphorous, such as plate count agar (Difco 0479) is used. Methods for detection of total heterotrophs are described in Clark, 1982 and AWPA, 1986. The agar is prepared according to label instructions and sterilized using an autoclave (121.6°C at 15 pounds of pressure) for 45 minutes. The agar is cooled in a water bath (40°F) and approximately 15-ml portions are poured into petri plates. The plates are allowed to solidify at room temperature.

The samples for microbial enumeration are serially diluted in duplicate per sample. Spread plates are prepared from the diluent sample tubes to achieve dilution factors of 10^4 - 10^6. The plates are incubated for 48 to 72 hours and enumerated as described in Section 4.1.

4.3 Polynuclear Aromatic Hydrocarbon (PAH) Degraders

To enumerate PAH degraders, phenanthrene is added to Noble agar plates (Difco 0142; 10 grams per liter of deionized, organic-free water) as the sole source of carbon. A minimal salts solution (method modified from Shiaris and Cooney, 1983) is also added. Due to the low water solubility of phenanthrene the compound is dissolved in acetone (five grams of phenanthrene per liter acetone) and a two-ml portion of the phenanthrene-acetone mixture is spread evenly on the surface of a prepared agar plate. Plates are allowed to dry (and acetone to evaporate) overnight. After drying, the phenanthrene appears as a cloudy film on the agar surface.

The sample dilutions generally plated are between 10^3 and 10^5. Dilutions are plated by aseptically transferring 0.1 ml aliquots to the agar surface while the plate is positioned and spinning on the spin plate apparatus. A "hockey stick" is used to evenly spread the inoculum. The plates are incubated at room temperature for three to five days. PAH degrading colonies are differentially identified as those colonies surrounded by zones of

clearing. Viewing the phenanthrene plates with an ultraviolet light source may intensify clearing zones making enumeration an easier task.

4.4 Other Specific Degraders

To enumerate specific VOA degrading organisms, a sealed incubator is used in addition to materials listed in Section 3.0. A desiccator which allows a controlled volume of volatile organics (i.e., toluene, diesel) to enter the system is used as the incubator. To prevent toxicity, the incubator is vented at intervals with air. During incubation, the inoculated plates are placed in an inverted position and petri plate covers are not utilized which allows gas exchange between the incubator and the agar surface. Noble Agar plates containing minimal salts are prepared as described in Section 4.3. Serial dilutions are performed and appropriate dilutions plated on the minimal salts media. The inoculated plates are then incubated in the sealed chamber as described in the previous paragraph. The plates are incubated at room temperature and vented with the VOAs twice a day for approximately one hour. Between venting periods with VOA compounds, the chamber is flushed with air. The plates are incubated for 4 to 6 days, then counted using a Quebec colony counter.

4.5 Degraders of Volatile Organic Aromatic (VOA) Compounds

Four enumerating specific microbial nutritional groups or "specific degraders", a minimal salts medium (see Appendix), prepared in organic-free deionized water, supplemented with the test compound serving as the sole carbon source for growth is used. Water-soluble compounds with low volatility can be added directly to the medium (salicylate, glucose, pentachlorophenol, etc.). For those compounds which are either water insoluble or highly volatile such as biphenyl or naphthalene, a small amount (one mg) of the compound is placed in the lid of agar plate following inoculation and the plate is sealed with parafilm. The compound is therefore not allowed to contact the media surface.

As previously described, samples are serially diluted in duplicate or triplicate per sample. The tube contents which are generally plated are those with dilution factors in the range of 10^3 to 10^6. The dilution factor may be adjusted accordingly using site information. The plates are incubated for three to five days prior to enumerating all colony forming units on the plate surface.

4.5.1 Hydrocarbon Degraders

Specific classes of hydrocarbon degraders are enumerated using a modification of the method described by Seki (1973). A hydrocarbon emulsion is first prepared by mixing 2.5 grams of a specific hydrocarbon and 0.05 g of Tween 80 in 97.5 ml of sterile deionized (organic-free) water. Hydrocarbons including hexadecane, pristane, cyclohexane, butylcyclopentane and dodecane may be used. Compounds having a flash point above sterilization temperature may be autoclaved for 20 minutes, however, preparation in sterile water, using sterile glassware and aseptic technique is sufficient to exclude contamination of hydrocarbon stock solutions. Following preparation, hydrocarbon mixtures are emulsified using an ultrasonic oscillator for 10 minutes.

Nobel Agar, which contains no organic or inorganic constituents, is prepared by adding 10 g of agar per liter of organic-free deionized water. The agar base is amended with inorganic nutrients by the addition of 100 ml of a 10X solution of minimal salts medium (prepared in organic-free water). The medium is sterilized in the autoclave for 45 minutes.

Specific hydrocarbon plates are then prepared by aseptically transferring 250 microliters of the hydrocarbon stock to a sterile petri plate, pouring 15-ml of Nobel Agar into the plate and swirling to disperse the hydrocarbon emulsion throughout the medium. The concentration of hydrocarbon present is approximately 470 ppm. Plates are allowed to gel and then stored at 20°C overnight prior to use.

Subtraction of counts obtained on media without added hydrocarbons (Nobel Agar alone and Nobel Agar plus 10 ppm Tween 80) eliminates overestimates from both the growth of oligotrophic microorganisms and organisms capable of growth on trace organic contaminants.

Hydrocarbon degraders are enumerated by serially diluting samples, and preparing spread plates with dilution factors in the range of 10^3 to 10^8. The dilution factor may be adjusted accordingly using site information. The plates are incubated for five days prior to enumerating all colony forming units on the plate surface.

4.6 Oil Degraders

The most probable number (MPN) method represents an alternative to the plate count method for determination of specific groups of viable organisms. The MPN method is a practical analysis based on a Poisson distribution. Successive dilution of the sample is carried out to the point of extinction at which no growth is observed. In the MPN method a sample is serially diluted with five replicates at each dilution. For estimating the concentration of oil degrading organisms, the test procedure is designed so that increases in turbidity (growth) with formation of small oil droplets can be seen, and subsequently scored as positive. Each replicate is scored as positive or negative with no attempt to quantify the number of microorganisms within a positively scored replicate. The number of positives and negatives at the dilution step before the extinction point is used in conjunction with appropriate statistical tables to obtain the number of oil degrading microorganisms.

For enumeration of oil degraders, test tubes containing 8 to 10 ml of minimal salts (MS) media and 50 to 100 microliters (ul) of sterile motor oil (sole carbon source) are prepared and sterilized. Five MPN tubes are then inoculated with 0.1 ml for each ten-fold dilution to be tested (generally 10^4 to 10^7). The inoculated tubes are then incubated at a 50 degree angle on a shaker table (250 rpm) for five days. Positive tubes are identified and enumerated. An MPN statistical table (see Appendix) is then used to obtain the actual number of oil degraders present in a sample.

4.7 Differentiation of Cultures

Differentiation and identification of dominant microbial taxa from an environmental sample may be accomplished by a series of microbiological enrichment and isolation techniques. Preliminary recognition tests, including Gram stains for morphological identification, motility, oxidase and catalase tests, and oxidation fermentation tests may be performed. API Analytab Products (API, Plainview, New York) Rapid NFT and 20E biochemical test strip systems may then be used for differentiation and identification of individual isolates.

In cases where biochemical testing of microbial isolates using the API NFT and 20E strips do not yield code identification numbers registered in the API identification data base, isolates in pure culture are submitted to Microcheck, Inc. (Northfield, VT) for identification by cellular fatty acid analysis. Briefly, the bacterial identification system used by Microcheck

consists of extraction of bacterial cellular fatty acids and analysis by gas chromatography using a flame ionization detector. Fatty acid separation is accomplished using a five percent methyl phenyl silicone capillary column. Fatty acids are identified by retention times, and profiles of unknowns compared to the fatty acid profiles of database strains. The comparison of the fatty acid profile of the unknown to those in the database is accomplished by principal component analysis and pattern recognition.

5.0 CALCULATIONS

Colony forming units (CFU) = number of colonies counted times the inverse of the corresponding dilution factor, divided by the volume plated. The results are expressed as 10^x cells/(g or ml).

6.0 QUALITY ASSURANCE AND CONTROL

All standard lab and sampling procedures (ReTec Laboratory QA/QC Manual) are followed to ensure accurate and reliable data are generated. Lab procedures ensure the equipment is cleaned and are adequate for the objectives of the study to minimize ambiguous results. Sampling methods are done in accordance with stated objectives and in a manner which is representative of test conditions established for the study. Sample design and data interpretation are in accordance with statistical methodologies to ensure definitive conclusions of the experiment.

The work area in which microbial enumerations are to be performed should be a non-porous surface which can be disinfected on a routine basis. The preferred working area is within a laminar flow hood.

The samples should be analyzed as soon as possible after collection to minimize changes in bacterial population. If the samples cannot be analyzed within 8 hours of collection, the sample should be maintained at a temperature below 4°C, but not frozen. Samples must be analyzed within 30 hours of receipt. The plates should be counted promptly following the appropriate incubation period.

Sterile plates or liquid media are included with all sample sets to ensure that laboratory contamination has not occurred.

All work performed is recorded in a permanent laboratory notebook for future reference. Analytical results are stored in a central lab file with the copies attached in the laboratory notebook. Chain-of-Custody and request for analysis sheets accompany all samples entering and exiting the lab. A copy of the Chain-of-Custody is kept on file until completion of the study.

7.0 RESPONSIBILITIES

The project engineer/scientist is responsible for the sampling procedures, sampling design and operating parameters for each experiment. The project engineer also prepares the final report and maintains the project files and notebook.

The project manager is expected to coordinate scheduling and provide oversight to ensure the specific objectives of each test are met.

The laboratory technician is responsible for the execution of the laboratory tests. Standard lab procedures are followed to ensure accuracy and precision. He/she is also expected to record the methods, observations and deviations of each test in the dedicated lab notebook for that specific project.

8.0 HEALTH AND SAFETY

A comprehensive health and safety program has been developed and is maintained at ReTeC's laboratory facilities. All analytical chemistry and treatability work is conducted in accordance with the Corporate Chemical Hygiene Plan and the Health and Safety Program.

All technical and support staff receive regular training and instruction in safe work practices and in procedures for dealing with accidents involving test substances. All laboratory operations are approved by the laboratory manager prior to implementation. Select carcinogens, reproductive toxins and substances having a high degree of acute toxicity are used only in posted, "Designated Areas".

Formal laboratory inspections are conducted on a quarterly basis to ensure compliance with existing laboratory policies and government regulations. Workplace air samples and wipe samples are conducted for determination of the amount and nature of airborne and/or surface contamination, and for use in the evaluation and maintenance of appropriate laboratory conditions. Air sampling is accomplished using the NIOSH grab sampling method with Drager colorimetric tube apparatus. Results of air monitoring are posted as required by the OSHA Lab Standard (29CFR 1910.1450).

Material Safety Data Sheets (MSDS) for all chemicals in the laboratory are maintained in three ring binders. All laboratory employees are trained in accessing and proper interpretation of MSDS files. The MSDS documents are readily available to employees and are located just adjacent to the laboratory, in the Health and Safety Officers possession. This area is accessible to all employees, at all times. In addition to the MSDS files, a number of other technical references which provide information pertaining to proper hazardous chemical handling procedures, proper disposal practices of chemicals in laboratories and various encyclopedias of chemicals, drugs and biologicals are available.

All personnel involved in use of hazardous agents obtain yearly medical examinations and surveillance and are provided with proper protective equipment necessary for the safe performance of their jobs. Personal protective equipment includes, but is not limited to, safety glasses with side shields, gloves, a clean lab coat and/or apron and a respirator. A standard operating procedure for the selection, care and proper use of respirators is available and is based on the OSHA Respiratory Protection Standard (29 CFR 1910.134). Work practices are designed using proper engineering controls (fume hoods) so that an employee's exposure to hazardous chemicals in the laboratory is minimized.

9.0 REFERENCES

Alexander, M. 1982. "Most-Probable-Number Method for Microbial Populations", Methods of Soil Analysis. pp. 1467-72.

AWPA. 1986. "Heterotrophic Plate Count", Standard Methods for the Examination for Water and Wastewater, 16th ed., pp. 860-69.

Clark, Francis E. 1982. "Agar-Plate Method for Total Microbial Count", Methods of Soil Analysis, vol. 2, pp. 1460-65.

Seki, H. 1973. "Silica Gel Medium for Enumeration of Petroleumlytic Microorganisms in the Marine Environment", Applied Microbiology. Vol. 26, pp. 318-320.

Shiaris, M. and Cooney, J. 1983. "Replica Plating Method for Estimating Phenanthrene-Utilizing and Phenanthrene-Cometabolizing Microorganisms", Applied and Environmental Microbiology. Vol.45, pp. 706-10.

APPENDIX

Minimal Salts Media (MS)

Autoclave media with the first three compounds, cool, then add the other compounds (previously autoclaved).

	per liter of DI H_2O
$(NH_4)_2SO_4$	200 mg
KH_2PO_4	350 mg
K_2HPO_4	775 mg
$MgSO_4$	100 mg (2 ml of 5g/100 ml)
$CaCl_2$ $2H_2O$	70 mg (1 ml of 7g/100 ml)
Metals Stock	1 ml

pH should be 7.0-7.2, adjust with KOH (0.1 N) if necessary.

Metals Stock - 100 ml of stock solution containing:

	mg/100 ml of DI H20
$FeSO_4$ $7H_2O$	200
$CuSO_4$ $5H_2O$	2
$CoCl_2$ $6H_2O$	2
$MnCl_2$ $4H_20$	20
$NaMoO_4$ $2H_2O$	10
$ZnSO_4$ $7H_2O$	10

Autoclave

For a solid minimal salts media, combine MS with 12 g/l agar. Add agar to carbon (if water-soluble and low volatility), ammonium, and phosphate solution and autoclave. Allow to cool to 40°C in water bath before adding other salt and metal stock solutions.

MOST-PROBABLE-NUMBER METHOD FOR MICROBIAL COUNT

Table of most probable numbers for use with 10-fold dilutions and 5 tubes per dilution (Cochran, 1950).

P_1	P_2	Most probable number for indicated values of P_3					
		0	1	2	3	4	5
0	0	-	0.018	0.036	0.054	0.072	0.090
0	1	0.018	0.036	0.055	0.073	0.091	0.11
0	2	0.037	0.055	0.074	0.092	0.11	0.13
0	3	0.056	0.074	0.093	0.11	0.13	0.15
0	4	0.075	0.094	0.11	0.13	0.15	0.17
0	5	0.094	0.11	0.13	0.15	0.17	0.19
1	0	0.020	0.040	0.060	0.080	0.10	0.12
1	1	0.040	0.061	0.081	0.10	0.12	0.14
1	2	0.061	0.082	0.10	0.12	0.15	0.17
1	3	0.083	0.10	0.13	0.15	0.17	0.19
1	4	0.11	0.13	0.15	0.17	0.19	0.22
1	5	0.13	0.15	0.17	0.19	0.22	0.24
2	0	0.045	0.068	0.091	0.12	0.14	0.16
2	1	0.068	0.092	0.12	0.14	0.17	0.19
2	2	0.093	0.12	0.14	0.17	0.19	0.22
2	3	0.12	0.14	0.17	0.20	0.22	0.25
2	4	0.15	0.17	0.20	0.23	0.25	0.18
2	5	0.17	0.20	0.23	0.26	0.29	0.32
3	0	0.078	0.11	0.13	0.16	0.20	0.23
3	1	0.11	0.14	0.17	0.20	0.23	0.27
3	2	0.14	0.17	0.20	0.24	0.27	0.31
3	3	0.17	0.21	0.24	0.28	0.31	0.35
3	4	0.21	0.24	0.28	0.32	0.36	0.40
3	5	0.25	0.29	0.32	0.37	0.41	0.45
4	0	0.13	0.17	0.21	0.25	0.30	0.36
4	1	0.17	0.21	0.26	0.31	0.36	0.42
4	2	0.22	0.26	0.32	0.38	0.44	0.50
4	3	0.27	0.33	0.39	0.45	0.52	0.59
4	4	0.34	0.40	0.47	0.54	0.62	0.69
4	5	0.41	0.48	0.56	0.64	0.72	0.81

MOST-PROBABLE-NUMBER METHOD FOR MICROBIAL COUNT (continued)

Table of most probable numbers for use with 10-fold dilutions and 5 tubes per dilution (Cochran, 1950) - (continued)

P_1	P_2	Most probable number for indicated values of P_3					
		0	1	2	3	4	5
5	0	0.23	0.31	0.43	0.58	0.76	0.95
5	1	0.33	0.46	0.64	0.84	1.1	1.3
5	2	0.49	0.70	0.95	1.2	1.5	1.8
5	3	0.79	1.1	1.4	1.8	2.1	2.5
5	4	1.3	1.7	2.2	2.8	3.5	4.3
5	5	2.4	3.5	5.4	9.2	16	-

Calculations

To calculate the most probable number of organisms in the original sample, select as P_1 the number of positive tubes in the least concentrated dilution in which all tubes are positive or in which the greatest number of tubes is positive, and let P_2 and P_3 represent the numbers of positive tubes in the next two higher dilutions. Then find the row of numbers in Table 100-1 in which P_1 and P_2 correspond to the values observed experimentally. Follow that row of numbers across the table to the column headed by the observed value of P_3. The figure at that point of intersection is the probable number of organisms in the quantity of the original samples presented in the inoculum added in the second dilution.

APPENDIX E
SOIL EXCAVATION PLAN

TABLE OF CONTENTS

SECTION		PAGE
1.0	SITE ASSESSMENT	E-3
2.0	MOBILIZATION	E-3
3.0	SEDIMENT AND EROSION CONTROL	E-3
4.0	EXCAVATION AND SCREENING OF CONTAMINATION SOIL	E-7
	4.1 PERMITS	E-7
	4.2 SOIL EXCAVATION	E-7
	4.3 SOIL SCREENING	E-7
5.0	SAMPLING	E-8
6.0	DECONTAMINATION	E-8
	6.1 EXCAVATION DECONTAMINATION FACILITY	E-8
	6.2 EQUIPMENT DECONTAMINATION	E-9
	6.3 GRAVEL/ROCK DECONTAMINATION	E-9
7.0	SITE CLEANUP	E-10
8.0	BACKFILLING AND SITE RESTORATION	E-10

LIST OF FIGURES

FIGURE		PAGE
E-1	SOIL EXCAVATION PLAN MINE FILL A, BUILDING 153	E-4
E-2	SOIL EXCAVATION PLAN MINE FILL A, BUILDING 158	E-5

SOIL EXCAVATION PLAN

The scope of work includes excavating, screening, and transporting explosives contaminated soils to the bioremediation facility, and backfilling and restoring the excavated area with non-contaminated backfill.

1.0 SITE ASSESSMENT

The areas of excavation are depicted in Figures E-1 and E-2, near Buildings 153 and 158, respectively. Previous analytical results indicate high levels of TNT and RDX near the vehicle turnaround area north of Building 153. A second area west of Building 158 has been identified as an additional contaminated soil source to insure excavation of 200 cubic yards of soil for the pilot scale operation. Analytical results show elevated levels of TNT and RDX in the area west of Building 158.

The NSWC Crane Site Representative will determine if a UXO survey is necessary. If the potential exists for encountering explosive ordnance in the work area, NSWC Crane will perform a surface UXO survey to identify and remove any unexploded ordnance. The area to be excavated will be surveyed and located in relationship to existing survey monuments. An Environmental Condition Report has been prepared documenting the conditions of the site prior to any Remediation activities. Data has also been collected to create a topographical map of the site and to verify the quantities of material to be excavated. Permits will be obtained for all site activities and mobilization will begin.

2.0 MOBILIZATION

Prior to mobilization of excavation equipment, the work area configuration, the Exclusion Zone (EZ), Contamination Reduction Zone (CRZ), and Support Zone (SZ), soil screener location, stockpile area, etc. shall be located as shown on Figures E-1 and E-2. The work area configuration is composed of the EZ boundary, the CRZ with appropriate decontamination stations, the SZ, run-on and run-off controls, and vehicle access routes. Tools, equipment, and supplies will be delivered to the site, barricades installed, and the personnel mobilized.

Prior to arrival on-site, the Contractor will inspect the equipment for the presence of dirt, oils, and grease. The general condition of the equipment will be inspected and tested to ensure that all safety systems and alarms are functional. The performance of the equipment will be tested to determine if the equipment can perform the required tasks.

A pre-excavation meeting will be held to review pertinent information including the excavation plan an figures and the building foundation, area utility, and service drawings (attached). All personnel scheduled to participate within the EZ shall attend the meeting and be briefed on the hazards and safety issues expected during the excavation activities.

3.0 SEDIMENT AND EROSION CONTROL

Storm water and erosion control measures will be implemented as necessary to control storm water run-on/ run-off and to prevent erosion. Straw bales will be placed along the edges of exclusion zones in sloped areas so that potential run-on and run-off are diverted in a manner that prevents surface water entry or exit from an exclusion zone. Storm water that may collect in the area of the excavation will be containerized and sampled to determine its disposition. A 6' x 6' x 2' deep, lined sump will be installed within the natural drainage swales at the edge of the each exclusion zone (Figures E-1, E-2). The sumps will provide both run-off and sediment control. Potentially contaminated water collected in the sumps will be pumped into the respective dual contained storage tank and handled with the water already in the tank. Based on sample results, contaminated water may be disposed of at the Mine Fill A water treatment unit, an off-site **U.S. Navy approved** disposal facility, or disposed of in the site's sewage treatment facility, provided the acceptance criteria is met.

[redacted]

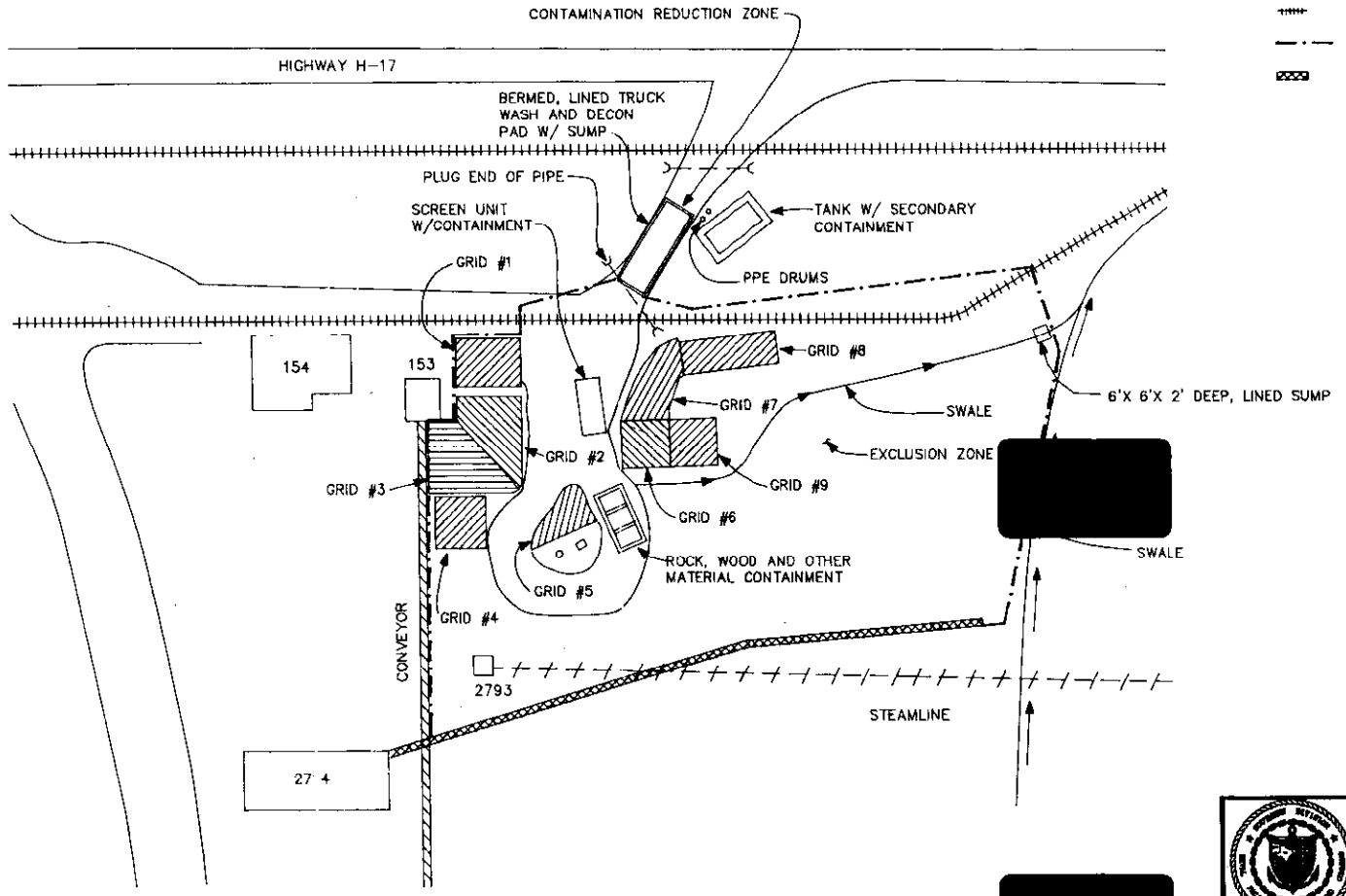

LEGEND

- BUILDING
- CONVEYOR
- STEAMLINE
- RAILROAD
- EXCLUSION ZONE LIMIT
- STRAW BALE SILT FENCE

NOT TO SCALE

[redacted]

MORRISON KNUDSEN CORPORATION
ENVIRONMENTAL SERVICES

PILOT SCALE
OPERATIONAL PLAN
NSWC CRANE
CRANE, IN

FIGURE E-1
SOIL EXCAVATION PLAN
MINE FILL A, BLDG 153

DWG DATE: 4/16/97 | DWG NAME: GRIDLO

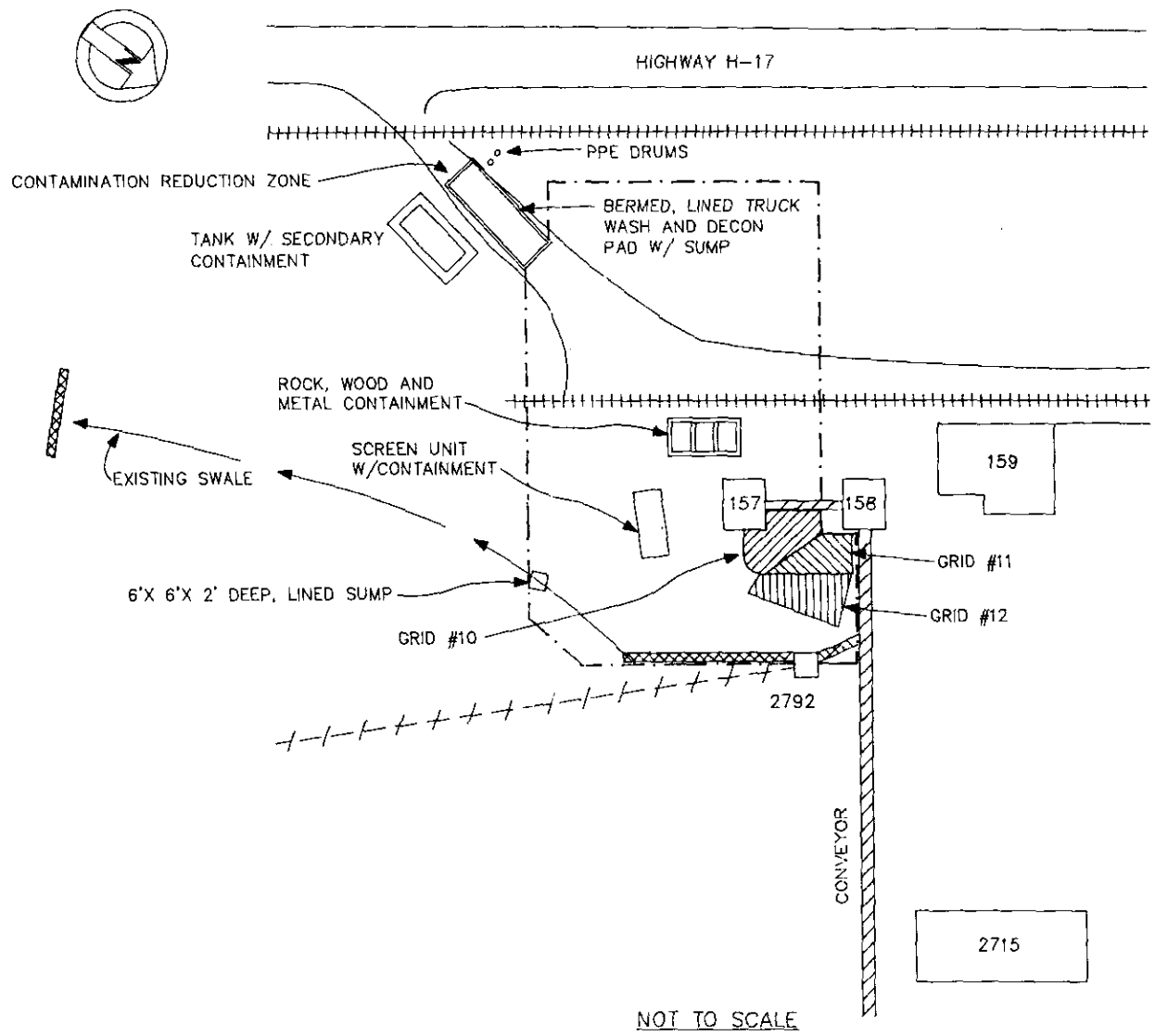

LEGEND

- BUILDING
- CONVEYOR
- STEAMLINE
- RAILROAD
- EXCLUSION ZONE LIMIT
- STRAW BALE SILT FENCING

MORRISON KNUDSEN CORPORATION
ENVIRONMENTAL SERVICES

PILOT SCALE
OPERATIONAL PLAN
NSWC CRANE
CRANE, IN

FIGURE E-2
SOIL EXCAVATION PLAN
MINE FILL A, BLDG 158

DWG DATE: 4/16/97 | DWG NAME: GRIDLOC2

4.0 EXCAVATION AND SCREENING OF CONTAMINATED SOIL

4.1 Permits

Prior to initiating any excavating, an Excavation and Trenching Permit will be required and will include a statement of clearance for safe access based on the removal or absence of unexploded ordnance in the work zone. The PM will be responsible for obtaining this permit through the Public Works Department, Building 2516 which is valid for thirty days and may be renewed if necessary.

4.2 Soil Excavation

After completion of the site assessment and mobilization, the removal of contaminated soil for the Pilot Scale test will begin. Excavation at SWMU-12/14 will consist of removal and transportation of approximately 200 cubic yards of explosive contaminated soil and be performed by a backhoe/loader and a skid steer loader. The areas of excavation will be identified based on analytical results from explosives testing, as described in Section 9.3. Particular attention will be paid to the areas near and about the Mine Fill buildings. Excavation will proceed cautiously due to the potential of unknown buried utilities and piping.

The soil will be excavated from pre-determined grids near Building 153 as shown on Figure E-1. Each grid will be excavated to a maximum depth of 3 feet. In areas of shallow bedrock, excavation will cease upon bedrock contact. Areas under construction will be identified and barricaded for personnel protection as described in the SSHP (Appendix A). The area will be sampled and backfilled to avoid leaving open excavations during periods of predicted precipitation. During daily operations, open excavations will be covered during periods of precipitation to prevent contact waters from forming.

4.3 Soil Screening

Excavated soil will be screened at the excavation site to remove oversize material (1½" or larger) from the soil prior to transport to the Bioremediation Facility for pilot scale composting. The excavated soil will be loaded into the soil screening equipment using a backhoe/loader. The screening will be performed using a screen with a minimum 50 ton/hr capacity. The screen will be a standard design, portable, road legal for towing, self-powered, and will have a feed hopper with grizzly bars, fines stacking conveyor and a reject (oversized material) discharge conveyor. The screening unit will be

located in a bermed lined area to prevent run-off and cross contamination of the surrounding area as shown in Figure E-1 and E-2.

After processing, the screened material will be dropped from the fines stacking conveyor into a stockpile, or directly into a truck bed for transport to the Bioremediation Facility in covered live-bottom semi-tractor trailers. If the screened soil is stockpiled, it will be placed in a bermed lined storage area to prevent run-off and will be covered during periods of predicted precipitation. Prior to leaving the excavation site, all truck wheels and wheel wells will be decontaminated using a spray wash system as described in Section 6.0 of this appendix. Loose soil on the truck bed exterior will be broomed or brushed off and placed back in the truck bed. The truck bed containing excavated soil will be covered with a tarp prior to transportation to the Biofacility.

The oversized material (larger than 1½ inches) that is screened out shall be separated into stockpiles, i.e., rocks, wood waste, and soil clods. The stockpiles will be located in bermed and lined storage areas adjacent to the site to prevent run-off from the pile. Each storage area will be a minimum of 10 feet by 10 feet, constructed using 60 mil HDPE liner and will be located in a grid area of existing contaminated soil to be excavated during the full scale operations. All stockpiled material will be covered with plastic during periods of predicted precipitation.

The soil clods shall be spread out within the EZ in a four to six inch thick layer, on a planned excavation area and allowed to dry sufficiently prior to pulverizing by the excavating equipment. The drying soil will be covered at the end of each day and during rain events to prevent saturation of the soil increasing the drying time. The soil shall then be cycled through the screener again.

Wood wastes, such as tree roots, lumber pieces etc., will be stockpiled in a covered, lined, and bermed area for use as a bulking material for future operations. Rocks larger than 1 ½ inches in diameter will be decontaminated as described in Section 6.0 of this appendix. If the analysis of the final rinse water indicates levels of contaminants less than the cleanup levels, the rock will be used as a natural backfill material. If levels of contaminants are above the cleanup levels, the U.S. Navy will be notified for disposition.

Should other materials be found during the excavation activities, the Contractor shall notify the U.S. Navy for disposition. All excavation, truck and rock decontamination, stockpiling and sorting will be performed in approved areas as shown in Figure E-1 and E-2.

Should the area of contaminated soil require excavation beyond the volume needed for the pilot scale tests, additional soil excavation and confirmation sampling will take place during the full scale operation.

5.0 SAMPLING

All sampling for waste and post-excavation characterization will follow the site specific QAPP. The QAPP is bound under separate cover and is to be used in conjunction with this Excavation Plan.

6.0 DECONTAMINATION

6.1 Excavation Decontamination Facility

The excavation site equipment decontamination facility shall be constructed of a single sheet of 60-mil high-density polyethylene (HDPE), sandbags, wood frame side walls and a container to collect decontamination water. The HDPE liner shall be placed over sand bedding material. The sides shall be constructed of the liner draped over sandbags or a bermed perimeter. The decontamination facility shall be sloped to a sump or collection area. A single sheet of HDPE shall cover the base of the decontamination facility. If the ground is too soft to support the decontamination pad, plywood may be used as a base for support. The decontamination facility shall be delineated with orange fencing or equivalent.

The liner will be visually inspected before use on a daily basis to detect possible failures of the liner material. An Excavation Site Decontamination Facility Inspection Checklist is provided in Appendix G of the Operational Plan. The inspection process will consist of checking for the following:

- Evidence of tears and holes.
- Evidence of seepage.
- The sheeting is adequately fastened to the side walls.
- The liner adequately covers the sandbags at the end section.

If the liner is damaged, it will be repaired or replaced before further use of the facility. Soil beneath the liner in the area of the breach will be sampled.

Records will be maintained specifying facility construction material and methods, disposition of liquids and solids, daily inspections, and any repairs and/or breaches of liner integrity.

All decontamination fluids collected in the sump will be containerized at the end of each shift and sampled to determine disposal requirements. If precipitation is predicted, the decontamination pad will be covered to prevent accumulation of storm water.

6.2 Equipment Decontamination

Prior to exiting the excavation site, loaded trucks will be inspected for exterior cleanliness. Each truck exterior and wheels will be protected with plastic lining during soil loading; and, therefore, should not need to be decontaminated. However, in case of accidental spillage of contaminated soil onto the truck exterior or if the truck is driven over a contaminated area, the decontamination process will take place at the excavation site decontamination pad. The equipment decontamination procedure is described in detail in Field SOP 3.0 provided in Appendix D.

6.3 Gravel/Rock Decontamination

Periodically, the need for washing of gravel and/or rocks will occur when excavating in roadway areas, near building foundations, or rocky terrain. The rocks and boulders in the oversized material rejected from the soil screening process will be sorted out from the soil clumps and woody vegetation as described in Section 4.3. The separated rocks or gravel will be loaded into a front-end loader bucket and taken to the decontamination pad. The rocks and or gravel will be thoroughly washed of all visible signs of soil with the high-pressure, low-volume spray wash unit as described in **Field** SOP 3.0 in Appendix D. Visual examination and rinse water samples, tested for explosives using laboratory analysis, will be used for verification of rock decontamination. The rinse water will be collected and transported to the Bioremediation Facility for use as process water during initial compost windrow formation. If the rinse water does not contain detectable levels of explosives above the cleanup levels, the washed rocks will be stockpiled in a clean area for use as natural backfill material or as designated by the U.S. Navy. The cleaned gravel will also be stockpiled for use as natural fill material.

7.0 SITE CLEANUP

As equipment is no longer required in the EZ it will be decontaminated and moved to the SZ. After all contaminated materials are containerized, the remaining equipment will be decontaminated and moved to the SZ. The decontamination equipment will then

be cleaned and the work zone barriers removed. After all equipment has been decontaminated, the decontamination facility will be dismantled. ~~The materials from the decontamination facility are anticipated to be recycled as a fuel source at the ABG.~~ **The material will be managed according to U.S. Navy EPD requirements.**

All decontamination fluids will be collected, sampled, **and either** ~~used to moisten the initial compost at the Bioremediation Facility;~~ disposed at the on-site sewage treatment plant; **or** disposed at the Mine Fill A treatment facility; or ~~a disposal~~ **disposed of in a** method approved by the U.S. Navy.

After the decontamination facility has been dismantled and removed, the underlying surface will be visually inspected. Visibly contaminated material will be removed and managed as a potentially affected material**, according to U.S. Navy EPD management procedures.**

8.0 BACKFILLING AND SITE RESTORATION

The extent of any excavation and the points at which post-excavation samples were taken will be surveyed to determine the volume of the excavation, to record the extent of the excavation, and to record the location of the post-excavation samples. The post-excavation sampling is further described in Section 4.5 of the Pilot Scale Biofacility QAPP. The excavation will be backfilled to grade with non-contaminated fill from an on-site **U.S. Navy approved** borrow source at the end of the excavation period, or at the end of each day during periods of predicted precipitation.

If an excavation is to remain open for an extended period of time due to equipment down time, non-contaminated fill material will be bermed around the excavation to prevent run-on or run-off during a rain event.

The backfill material will be placed in 12-inch lifts and compacted to the requirements of the Testing Plan and Log found in the Appendix G. Backfilled areas will be covered with a minimum of three inches of topsoil (defined as having a minimum of 5% organic matter, which may include the clean soil compost material), seeded with native grasses, fertilized, and watered. Erosion control measures will be maintained until the growth of grasses is sufficient to prevent erosion.

APPENDIX F
SUPPLEMENT TO QAPP

TABLE OF CONTENTS

SECTION		PAGE
1.0	SCOPE AND OBJECTIVES	F-4
1.1	INTRODUCTION	F-4
1.2	PROCESS MONITORING TASKS AND OBJECTIVES	F-4
1.2.1	Process Monitoring Tasks	F-4
1.2.2	Data Quality Objectives for Process Monitoring	F-5
1.3	PROCESS MONITORING MEASUREMENT AND SAMPLE LOCATIONS AND FREQUENCY	F-5
2.0	QUALITY ASSURANCE OBJECTIVES FOR PROCESS MONITORING DATA	F-7
2.1	FIELD PRECISION OBJECTIVES	F-7
2.2	FIELD ACCURACY OBJECTIVES	F-7
2.3	FIELD COMPLETENESS OBJECTIVES	F-7
2.4	REPRESENTATIVENESS OF FIELD DATA	F-7
2.5	COMPARABILITY OF FIELD DATA	F-7
3.0	PROCESS MONITORING MEASUREMENT AND SAMPLING PROCEDURES	F-8
3.1	PROCESS MEASUREMENTS	F-8
3.2	QA/QC MEASUREMENTS AND SAMPLES	F-8
3.2.1	Field Duplicate Measurements	F-8
3.3	DECONTAMINATION PROCEDURES	F-9
3.4	FIELD METHOD AUDITS	F-9
4.0	CUSTODY PROCEDURE	F-9
4.1	FIELD CUSTODY PROCEDURES	F-10
4.1.1	Field Documentation	F-10
4.1.2	Measurement and Sample Identification	F-10
5.0	CALIBRATION PROCEDURES AND FREQUENCY	F-11
6.0	PROCESS MONITORING DATA REDUCTION, VALIDATION AND REPORTING	F-12
6.1	DATA REDUCTION	F-12
6.2	DATA ASSESSMENT AND CORRECTIVE ACTION	F-12
6.3	DATA VALIDATION	F-12
6.4	DATA REPORTING	F-13

LIST OF TABLES

TABLE		PAGE
1-1	PROCESS MONITORING DATA COLLECTION TASKS	F-4
1-2	FIELD MEASUREMENT PARAMETERS AND ASSOCIATED MEASUREMENT AND ACCURACY RANGES	F-6
1-3	PROCESS MONITORING MEASUREMENT AND SAMPLING SCHEDULE	F-6
3-1	SUMMARY OF PROCESS MONITORING PROGRAM	F-9
6-1	DATA ACCEPTANCE CRITERIA AND SUGGESTED CORRECTIVE ACTION	F-12

QAPP APPENDIX

SECTION 1.0
SCOPE AND OBJECTIVES

1.1 INTRODUCTION

This QAPP Appendix presents the objectives, tasks, and QA/QC procedures associated with the measurement and monitoring of field parameters during the Pilot Scale study. The information in this appendix supplements the approved Pilot Scale QAPP.

1.2 PROCESS MONITORING TASKS AND OBJECTIVES

1.2.1 *Process Monitoring Tasks*

During the Pilot Scale study, ~~field~~ **process** parameters will be measured **in the field** to evaluate the effectiveness of each compost mix. The individual field measurement data collection tasks are summarized in Table 1-1 and described below. Data collection tasks that require analytical data from an off-site laboratory are described in Section 8.0 of the Pilot Scale Operational Plan, and addressed in the approved Pilot Scale QAPP.

TABLE 1-1
PROCESS MONITORING DATA COLLECTION TASKS

TASK	DATA COLLECTED	DATA USE	DATA QUALITY LEVEL
Oxygen level monitoring	oxygen, %	monitor the effectiveness and progress of the compost cycle	field level
Temperature Monitoring	temperature, °C		field level
Moisture Level Monitoring	moisture, % MWHC		field level
pH Level Monitoring	pH		field level

Field level data is characterized by the use of portable instruments which can provide real-time data. Instrument calibration and correct data interpretation are required for data to be acceptable.

Oxygen Level Monitoring

Oxygen levels will be monitored to ensure aerobic conditions are present in the windrows. Oxygen measurements will be collected each day prior to and following turning of the windrow.

Temperature Monitoring

Windrow temperature will be the primary indicator of successful operation of composting operations. Windrow temperature measurements will be collected each day prior to and following turning of the windrow.

Moisture Level Monitoring

Moisture level will be monitored to ensure optimum operating conditions for microbial growth and contaminant degradation. Moisture level measurements will be collected three times per week prior to windrow turning. If additional moisture is added during windrow turning, a second moisture level measurement will be collected following turning of the windrow.

pH Level Monitoring

pH level measurements will be collected once per week. pH data will be recorded but will not be used to change operating conditions.

1.2.2 Data Quality Objectives for Process Monitoring

The overall objective of collecting field measurements of process parameters during the Pilot Scale study is to obtain data of sufficient quality and quantity to determine that acceptable operating conditions are maintained in the windrows. The specific objective of each process monitoring sampling event is to collect representative data for the purpose of evaluating the variance in each process parameter (oxygen, temperature, moisture, pH) among samples from different locations within a single windrow.

The analytical level of process monitoring data will be field level for in-situ field measurements, as shown in Table 1-1. Measurement methods and acceptable reporting limits for the various field measurement parameters are presented in Table 1-2. The data quality objectives for precision, accuracy and completeness are described in Section 2.0.

TABLE 1-2 FIELD MEASUREMENT PARAMETERS AND ASSOCIATED MEASUREMENT AND ACCURACY RANGES		
PARAMETER	**MEASUREMENT METHOD**	**MEASUREMENT AND ACCURACY RANGES**
Oxygen	oxygen probe	range = 0 - 22% in 1% increments
Temperature	hand-held compost temperature probe	range = 0 to 93°C in 1° increments
Moisture Level	sample weighing and drying	weights reported to the tenth of a gram
pH	pH meter	range = 4.0 to 10.0; pH reported to the tenth of a pH unit

1.3 PROCESS MONITORING MEASUREMENT AND SAMPLE LOCATIONS AND FREQUENCY

Locations for process monitoring measurements and samples are described in Section 9.1 of ~~the~~ **this** Pilot Scale Operational Plan. A summary of the process monitoring schedule is presented in Table 1-3 ~~of this appendix~~ **below:**

TABLE 1-3 PROCESS MONITORING MEASUREMENT AND SAMPLING SCHEDULE				
PARAMETER	**SAMPLING/ ANALYTICAL METHOD**	**NUMBER OF SAMPLES PER SAMPLING EVENT**	**VOLUME REQUIRED PER SAMPLE**	**SAMPLING SCHEDULE**
Oxygen	Field SOP 1.0	6 per cross-section (24 total)	in situ measurement	Daily
Temperature	Field SOP 1.0	6 per cross-section (24 total)	in situ measurement	Daily
Moisture Level	Field SOP 1.0	3 per cross section (12 total)	~~in situ~~ **ex situ** measurement **volume designated in Field SOP**	Three times per week **and after moisture added to any pile**
pH	Field SOP 1.0	1 per cross section (4 total)	~~in situ~~ **ex situ** measurement **on sample left from moisture sampling**	Once per week

SECTION 2.0
QUALITY ASSURANCE OBJECTIVES FOR PROCESS MONITORING DATA

2.1 FIELD PRECISION OBJECTIVES

Field duplicate data will be evaluated to determine potential variability introduced by sampling or measurement techniques. This evaluation will be performed during data verification and summarized in the data assessment. One duplicate sample or measurement will be collected for every 20 or fewer samples or measurements to qualitatively evaluate precision.

2.2 FIELD ACCURACY OBJECTIVES

Accuracy for field measurements will be ensured by adhering to established Field SOPs found in Appendix D.

2.3 FIELD COMPLETENESS OBJECTIVES

Field completeness for process monitoring data will be 85%. This goal reflects the ability to collect additional samples or measurements, if necessary, to complete the data set.

2.4 REPRESENTATIVENESS OF FIELD DATA

Representativeness is addressed by establishing a well-designed sampling program. The rationale for the sampling program is described in Section 8.0 of ~~the~~ **this** Pilot Scale Operational Plan. Sampling locations and frequencies have been selected so that the material sampled will be representative of the appropriate windrow or windrow section.

2.5 COMPARABILITY OF FIELD DATA

The comparability goal will be achieved by using established Field SOPs and by reporting data in appropriate units. Field measurement procedures are designed to ensure comparability of data within a single windrow, and among different windrows.

SECTION 3.0
PROCESS MONITORING MEASUREMENT AND SAMPLING PROCEDURES

3.1 PROCESS MEASUREMENTS

Process monitoring field measurements and samples will be collected from the sampling locations shown in Figure 1-1 in Field SOP 1.0 in Appendix D. Sample locations other than those that are pre-designated will be clearly identified in the field logbook. The sampling schedule is shown in Table 1-3 of this appendix. A summary of the process monitoring program is provided in Table 3-1.

Field measurements will be collected only with kits, instruments, tools, gauges, or other measuring devices that are controlled, calibrated, adjusted and maintained in accordance with the maintenance and calibration requirements described in Field SOP 1.0 in Appendix D.

TABLE 3-1
SUMMARY OF PROCESS MONITORING PROGRAM

TASK	PARAMETERS	SAMPLING FREQUENCY	FIELD DUPLICATES
Oxygen level monitoring	oxygen	6 per cross-section (24 per event)	5% (at least one per event)
Temperature Monitoring	temperature	6 per cross-section (24 per event)	5% (at least one per event)
Moisture Level Monitoring	moisture	3 per cross section (12 per event)	5% (at least one per two events)
pH Level Monitoring	pH	1 per cross section (4 per event)	5% (at least one per 5 events)

3.2 QA/QC MEASUREMENTS AND SAMPLES

QA/QC measurements and samples will be collected to ensure that representative and reproducible data are obtained. QA/QC measurements associated with process monitoring field measurements are described below.

3.2.1 Field Duplicate Measurements

Field duplicate data will be evaluated to determine potential variability introduced by sampling or measurement techniques. One duplicate sample or measurement will be collected for every 20 or fewer samples or measurements to qualitatively evaluate precision. The precision of field duplicate measurements will be determined by calculating the relative percent difference (RPD) between the original and the duplicate measurement. The calculation for RPD is provided in Section 12.0 of the **approved** Pilot Scale QAPP.

3.3 DECONTAMINATION PROCEDURES

Procedures for decontamination of large equipment, sampling equipment, and personnel are described in Field SOP 3.0 in Appendix D. Large equipment will be decontaminated in a designated decontamination facility. All non-disposable sampling equipment will be decontaminated after each sample or measurement. Personnel will remove and dispose of or clean PPE within the designated personnel decontamination area. The extent of known contamination will determine the degree of decontamination required. If the extent of contamination cannot be readily determined, cleaning will be performed according to the assumption that the equipment is highly contaminated. The windrow machine will be inspected between windrows and all loose dirt will be swept or brushed off the exterior.

Decontamination water from the large equipment decontamination facility will be stored in a dedicated tank. Decontamination water and water collected in sumps will either be ~~recycled as compost process water or~~ transported to a wastewater treatment facility at Rockeye or Mine Fill A **or disposed according to Navy EPD procedures,** as described in Section 4.7 of the approved Pilot Scale QAPP.

Equipment rinsate blanks will be collected to ensure that sampling equipment is clean and that the potential for cross-contamination has been minimized or prevented. Rinsate blanks will be collected from the final reagent grade water rinse used in sample equipment decontamination as described in Section 4.6 of the approved Pilot Scale QAPP.

Decontamination of sampling probes is addressed in Appendix D of this Operational Plan.

Decontamination of sampling equipment is addressed in Appendix D of this Operational Plan.

3.4 FIELD METHOD AUDITS

Field methods may be audited at any time during the Pilot Scale Study by the U.S. Navy and the U.S. EPA.

SECTION 4.0
CUSTODY PROCEDURES

4.1 FIELD CUSTODY PROCEDURES

4.1.1 Field Documentation

All field data will be recorded in bound field logbooks. Entries will be described in as much detail as possible. Field logbooks will be assigned to project personnel an will be stored in the project document control center when not in use. Each logbook will be identified with a specific document number. Field logbook title page information and data recording procedures will be as described in Section 5.1 of the approved Pilot Scale QAPP.

4.1.2 Measurement and Sample Identification

Field measurements will be identified using the following format:

mixXXXXXX

- mix - precedes the windrow number and indicates a mix for the pilot scale study
- the first 'X' indicates the mix or windrow number ~~(1-8)~~ **(1-7, etc.)**
- the second and third 'X's indicate the day sampled ~~(00, 07, 14, 21, 28, etc.)~~ **(00, 05, 10, 20, 30, 40, 60)**
- the fourth 'X' indicates whether the sample was collected before (b) or after (a) turning
- the fifth 'X' indicates the cross-section letter (A, B, C, or D)
- the sixth 'X' indicates the sample location within the cross-section (1 through 6)

Therefore, an example temperature measurement identification number is:

~~mix303aB5,~~ **mix 305aB5**

which indicates a measurement collected from mix (windrow) number three, on the ~~third~~ **fifth** day, after turning, from cross section 'B' at sample location 5.

Field duplicate measurements will be labeled using the same protocol as regular measurements, but will have the letters 'FD' added to the end. Since field duplicate measurements are not sent to a laboratory, there is no need to hide its identification as a duplicate.

SECTION 5.0
CALIBRATION PROCEDURES AND FREQUENCY

Field instruments will be calibrated in accordance with manufacturer's instructions and Field SOP 1.0 in Appendix D. Instruments including the oxygen/temperature probe and pH meter will be calibrated daily prior to use. Calibration data will be documented in the field logbook.

SECTION 6.0
PROCESS MONITORING DATA REDUCTION, VALIDATION AND REPORTING

6.1 DATA REDUCTION

Data from direct read instrumentation will be recorded in field logbooks immediately after measurements are taken. If errors are made, results will be legibly crossed out, initialed and dated by the field sampler, and corrected in a space adjacent to the original (erroneous) entry.

The precision of field duplicate measurements will be determined by calculating the relative percent difference (RPD) between the original and the duplicate measurement. The calculation for RPD is provided in Section 12.0 of the approved Pilot Scale QAPP.

6.2 DATA ASSESSMENT AND CORRECTIVE ACTION

RPD will be calculated on a weekly basis. There are no standard acceptance criteria for field measurement data. The criteria in Table 6-1 will be used to determine the need for closer examination of data collection and instrument calibration procedures, however, accedence of these suggested values will not be cause for rejection of the data.

TABLE 6-1
DATA ACCEPTANCE CRITERIA AND SUGGESTED CORRECTIVE ACTION

MEASUREMENT	ACCEPTABLE RPD	CORRECTIVE ACTION
Oxygen Level	20%	• check instrument calibration • verify adherence to Field SOP
Temperature	10%	• check instrument calibration • verify adherence to Field SOP
Moisture Level	20%	• verify adherence to Field SOP
pH	15%	• check instrument calibration • verify adherence to Field SOP

6.3 DATA VALIDATION

Validation of field measurement data will consist of checking for transcription errors and reviewing field log books.

6.4 DATA REPORTING

Field measurement data will be tabulated and submitted as required. The Pilot Scale Study Final Report will provide summary tables and graphs of the field measurement data. All field measurement data sheets and logbooks will be retained. Raw data will be identified and included in a separate appendix of the final report. The report will contain a section on QA issues documenting any corrective actions taken during the Pilot Scale Study. Reporting requirements are described in Section 12.0 of ~~the~~ **this** Pilot Scale Operational Plan.

APPENDIX G
OPERATION FORMS, QC CHECKLISTS, AND LOGS

TABLE OF CONTENTS

ITEM

WINDROW PROCESS DATA - DAILY LOG

OPERATORS DAILY MEMO AND SAFETY INSPECTION SHEET

RECORD OF RECIPE

RECORD OF COMPOST MATERIAL INTERIM STORAGE

KNIGHTS SOIL SCREENER - MODEL PRO-SCREEN 1605

JOHN DEERE FARM TRACTOR - MODEL 7710

SUPREME GRINDER/MIXER - MODEL 700

SCARAB WINDROW TURNER - MODEL 20HYD450

INSPECTION PLAN AND LOG

Windrow Process Data - Daily Log
Date:_____

Windrow Number:_____ Day _____	Ambient Conditions	Inspection
Date Windrow Constructed: / /	Relative Humidity: _____ %	Inspected By:
Windrow Size: H___, W___, L___ **feet**	Temperature: _____ °C	Performed By:
Texture:	Wind: ☐ Calm ☐ Low ☐ Med. ☐ Gusty	
Time of Turning: _____ am/pm		
Moisture Addition: Gal._____	Wind Direction: _____	

		Before Turning							After Turning					
Sample Grid	Sample Location	Time of Sample Start	MWHC %	pH	Temp °C		O_2%		Time of Sample	MWHC %	Temp °C		O_2%	
					1.0'	2.5'	1.0'	2.5'			1.0'	2.5'	1.0'	2.5'
A	1a													
	1													
	2a													
	2													
	3a													
	3													
B	1a													
	1													
	2a													
	2													
	3a													
	3													
C	1a													
	1													
	2a													
	2													
	3a													
	3													

Sample Grid	Sample Location	Before Turning							After Turning					
		Time of Sample Start	MWHC %	pH	Temp °C		O_2%		Time of Sample	MWHC %	Temp °C		O_2%	
					1.0'	2.5'	1.0'	2.5'			1.0'	2.5'	1.0'	2.5'
D	1a													
	1													
	2a													
	2													
	3a													
	3													

Description of Windrow:

Comments:

OPERATORS DAILY MEMO AND SAFETY INSPECTION

Equipment Type:	Shift:	Date:	Operator:	Form EQ-01

Inspection Item	OK	N/A	REPAIR	Adjustments or Repairs Required
Service, Parking & Emer. Brakes				
Steering Mechanism				
Tires, Wheels Nuts				
Lights, Reflectors				
Coupling Devices				
Operating Controls				
Windshield Wipers				
Horn & Backup Alarm				
Seat Belts/Shoulder Harness				
Fire Extinguisher				
Mirrors				
Hydraulic Systems Operation				
Fluid Levels				

RECORD OF RECIPE

RECIPE # _____ PERFORMED BY: _____

DATE: ___/___/___ INSPECTED BY: _____

AMENDMENT	DESIGN QUANTITY		BATCH 1 ACTUAL QUANTITY		BATCH 2 ACTUAL QUANTITY		BATCH ~~2~~ 3 ACTUAL QUANTITY		TOTAL ACTUAL QUANTITY		
	cubic yards	pounds	cubic yards	pounds	cubic yards	pounds	cubic yards	pounds	cubic yards	pounds	
Turkey Manure											
Chicken Manure											
Cow Manure											
POTW Sludge											
Vegetable Waste											
Alfalfa											
Straw											
Wood Chips											
Sawdust											
Soil											
Total											

Comments:

RECORD OF COMPOST MATERIAL INTERIM STORAGE

Building# _____

			North			
1	2	3		4	5	6
West						East
7	8	9	South	10	11	12

Mix #	Location	Date Stored	Logged By	Comments

LUBRICATION & SERVICE

ALWAYS STOP SCREENER, TURN OFF ENGINE AND REMOVE KEY BEFORE SERVICING REPAIRING, OR CLEANING. USE SAFE SHOP PROCEDURES AND EXERCISE CAUTION WHEN WORKING ON THIS MACHINE!

DAILY SERVICE (10 Hour Maximum Interval):
- Grease trunnion wheel bearings.
- Grease fine conveyor pulley and return roller bearings.
- Check conveyor belt tracking.
- Check and clean all belt scrapers.
- Check all conveyor guides and rollers for rocks or obstructions.
- Check cooling system fluid level.
- Check fuel engine and hydraulic oil levels.
- Check air filter indicator (while running) and replace if necessary.
- Check engine and hydraulic temperature (while running).
- Check or clean radiator and oil cooler.

WEEKLY SERVICE (50 Hour Maximum Interval):
- Grease feed conveyor pulley and return roller bearings.
- Grease Prescreen pivots.
- Check oil level in feed conveyor gear reducer.
- Oil drum drive chain.
- Check fuel filter and drain water sump under fuel tank.

MONTHLY SERVICE (250 Hour Maximum Interval):
- Change engine oil and filter.
- Check conveyor belt tension.
- Clean air prefilter
- Oil Feed conveyor drive chain.
- Service battery.

500 HOUR SERVICE:
- Change hydraulic return filter.
- Lubricate fifth wheel plate.
- Grease extension conveyor.
- Refer to engine lubrication and service chart.

1600 HOUR SERVICE:
- Drain and clean hydraulic oil reservoir.
- Change hydraulic oil, clean strainer, cap and magnetic trap.
- Change feed conveyor gear reducer oil.
- Check wheel bolts.
- Check fifth wheel kingpin condition.
- Check brake components.
- Drain and flush cooling system, and change anti-freeze.

LUBRICATION & SERVICE

ALWAYS STOP SCREENER, TURN OFF ENGINE AND REMOVE KEY BEFORE SERVICING, REPAIRING, OR CLEANING. USE SAFE SHOP PROCEDURES AND EXERCISE CAUTION WHEN WORKING ON THIS MACHINE!

GREASE - For lubricating bearing, use a good quality multi-purpose grease.

ENGINE OIL - API service classification of CD or higher. Refer to chart for viscosity.

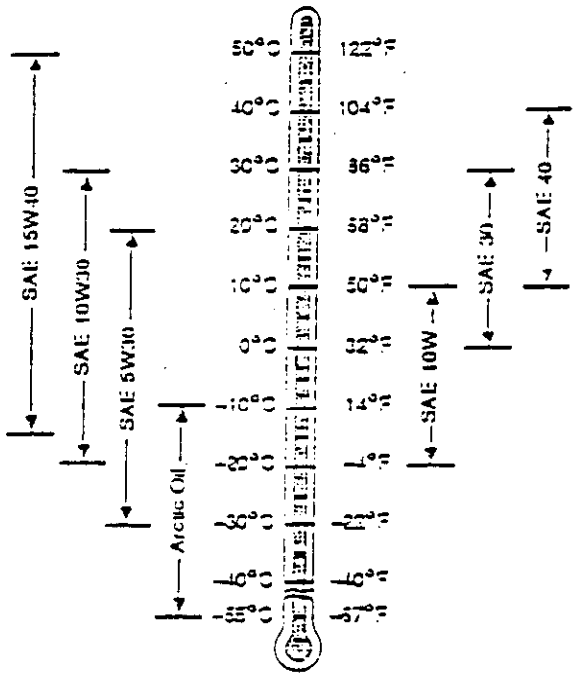

HYDRAULIC OIL - Recommend use of 10W30 motor oil (API Service Class CD) for all uses in temperatures down to zero degrees (F). For operation in temperatures below zero degrees (F), use 5W30 motor oil.

DIESEL FUEL - Use good quality fuel blended for area temperatures and conditions.

ROLLER CHAIN OIL - Use engine oil or spray on chain lubricant.

Mack Semi-tractor Truck
and Red River Live-Bottom Trailer

ENGINE OIL, OIL & FUEL FILTERS and COOLANT CONDITIONER CHANGE

Mileage (in Thousands)*	12.5	25	37.5	50	62.5	75	87.5	100
Kilometers (in Thousands)*	20	40	60	80	100	120	140	160
Engine Hours*		600		1200		1800		2400
Oil & Filter Change		✓		✓		✓		✓
Coolant Conditioner Change		•		•		•		•

*Whichever Comes First

Line Haul Operations – High mileage types of usage such as over-the-road, point-to-point operations. Vehicles used for pump-off, or similar types of service, where the engine idles for periods of time without the vehicle being driven, require oil change intervals based on hours of engine operation rather than accumulated chassis mileage even if vehicle usage exceeds 100,000 miles/160 000 km per year.

SHORT HAUL – Low Mileage/High Hour Operations

Vehicle Usage Greater Than 100,000 Miles/160 000 KM Per Year

MAINTENANCE AND LUBRICATION

Days of Usage*	45	90	135	180	225	270	315	360
Hours of Operation*	150	300	450	600	750	900	1050	1200
Maintenance Schedule	A	B	A	C	A	B	A	D
Chassis Lubrication†		L		L		L		L
Gear Oil Change				○				○

*Whichever Comes First

ENGINE OIL, OIL & FUEL and COOLANT CONDITIONER CHANGE

Days of Usage*	45	90	135	180	225	270	315	360
Hours of Operation*	150	300	450	600	750	900	1050	1200
Oil Only Change		✓				✓		
Oil & Filter Change				✓				✓
Coolant Conditioner Change		■		•		■		•

*Whichever Comes First

Short Haul Operations – Low mileage/High hour types of usage such as stop-and-go driving, on/off highway, pick-up and delivery, pump-off operations, etc.

† Recommended Spicer Clutch Release Bearing Lubrication Intervals:

- On-Highway: Every 10,000 miles (16 000 km) or once per month
- Off-Highway/Severe Service: Every 250 hours or once per month

Also refer to pages 148 and 150 for additional information.

200100a

MACK PREVENTIVE MAINTENANCE INSPECTION

☐ CHECK TO INDICATE INSPECTION TO BE PERFORMED

☐ A Inspection (see this page)
☐ B Inspection (see back page)
☐ Lubricate Chassis
☐ Change Engine Oil & Filters
☐ Change Gear Oil

Date _____
Customer _____
Fleet No. _____
Mileage _____
Chassis No. _____
Repair Order No. _____

NOTE: REFER TO MAINTENANCE AND LUBRICATION MANUAL TS494 OR MASTER MANUAL SECTION 3–101 FOR INSPECTION INSTRUCTIONS

ROAD TEST

OK	NC	Engine:
		Engine Alarms
		Starter Operation
		Engine Sound
		Exhaust Smoke
		Oil Pressure _____ (idle)
		Oil Pressure _____ (gov.)
		Fuel Gauge
		Volts _____ (max.)
		Engine Temp. _____ (max.)
		Tachometer/Speedometer
		Exhaust Pyrometer
		Turbo Operation
		Pull Limiter/LDA
		Shutters
		Air Compressor:
		Operation
		Gov. Cut In _____
		Gov. Cut Out _____
		Low Air Pressure Indicator

OK	NC	Clutch:
		Free Pedal
		Clutch Release
		Clutch Brake Operation
		Steering:
		Bind
		Free Play
		Wander/Shimmy
		Power Steering Operation
		Electronic Maxi-Miser:
		Electrical Check
		Magnetic Road Speed Sensor
		Road Speed Limit Setting
		Brakes:
		Unusual Noise
		Pull
		Drag

OK	NC	Parking Brake:
		Holding Ability
		Release
		Heater/Defroster
		Operation
		Air Conditioner:
		Operate 5 Minutes
		Trans./Aux. Trans./ Transfer Case/Flywheel PTO:
		Shifting
		Noise/Vibration
		Carrier:
		Noise
		Vibration
		Propeller Shaft:
		Noise/Vibration
		Engine Brake Operation
		Engine Shutdown

"A" INSPECTION
(To Be Performed After Road Test Above)

OK	NC	Cab:
		Mirrors/Glass
		Horns
		Clean Around Treadle Valve
		Windshield Wiper/Washer
		Back-Up Lights
		Tail Lights
		Brake Lights
		Turn Signals
		Hazard Warning Signal Flasher
		Marker Lights
		Headlights HI _____ LO _____
		Instrument Panel Lights
		V-MAC:
		Check for active faults

OK	NC	
		Battery Water Level
		Air System:
		Leaks
		Drain Reservoirs Slowly
		Spring Brake Application
		Alcohol Evap. Reservoir Level
		Radiator:
		Leaks/Coolant Level
		Antifreeze _____ ° Protection
		Belts:
		Condition/Tension with Gauge
		Engine:
		Leaks/Oil Level
		Governor Seals
		Drain Debris From Fuel Tank(s)

OK	NC	Dry Air Cleaner:
		Replace Element if Necessary
		Engine Air Induction System:
		Hose & Pipe Condition
		Tighten Clamps
		Drain CMCAC Condensation
		Electronic Maxi-Miser:
		Control Cable Routing
		Accelerator Linkage Movement
		Exhaust System Leaks
		Steering Gear:
		Mounting
		Linkage
		Power Steering:
		Leaks/Fluid Level

NC — Needs Correction

COMMENTS _____

CONTINUED ON BACK

"A" INSPECTION
CONTINUED

OK	NC	Front Axle & Suspension:
		Broken Spring Leaves
		Wheel Seal Leaks
		Wheel Bearing Lube Level
		Adjust Brakes
		Trans./Aux. Trans. Transfer Case/Flywheel PTO:
		Leaks/Lube Level
		Mounting
		Propeller Shafts:
		Universal Joints
		Yoke-Flange Bolts
		Center Bearing

OK	NC	Rear Axle/Bogie & Suspensions:
		Broken Spring Leaves
		Wheel Seal Leaks
		Adjust Brakes
		Carrier(s):
		Leaks/Lube Level
		Tires:
		Condition
		Pressure
		Wheels/Rims:
		Condition
		Stud/Nut Torque
		Axle Flange Nut Torque

OK	NC	
		Trailer Cord
		Trailer Hoses/Glad Hands
		Fifth Wheel
		PTO/Hoist:
		Lube Level
		Operation
		Safety Equipment:
		Fire Extinguisher Pressure
		ICC Safety Kit
		Flags

"B" INSPECTION
(To Be Performed After Road Test)

OK	NC	Cab:
		Mirrors/Glass
		Horns
		Clean Around Treadle Valve
		Windshield Wiper/Washer
		Back-Up Lights/Tail Lights
		Brake Lights
		Turn Signals
		Hazard Warning Signal Flasher
		Marker Lights
		Headlights H. _____ LO _____
		Instrument Panel Lights
		Seats/Seat Belts
		Doors & Latches
		Hood & Latches
		Tilt Cab:
		Reservoir Fluid Level
		Operation
		Battery:
		Water Level
		Clean & Tighten Terminals
		Cable Condition/Routing
		Air System:
		Leaks
		Drain Reservoirs Slowly
		Spring Brake Application
		Service Air Dryer
		Alcohol Evac. Reservoir Level
		Hose Condition
		Air Compressor Filter (Mack V8)
		Service Air System Components
		Radiator:
		Leaks/Coolant Level
		Antifreeze
		Hose Condition
		Tighten Hose Clamps

OK	NC	
		Alternator Mounting
		Belts:
		Condition/Tension with Gauge
		Alignment
		Engine:
		Leaks/Oil Level
		Governor Seals
		Drain Debris From Fuel Tank(s)
		Dry Air Cleaner:
		Replace Element if Necessary
		Engine Air Induction System:
		Hose & Pipe Condition
		Tighten Clamps
		Torque CMCAC Hose Clamps
		Drain CMCAC Condensation
		Electronic Maxi-Miser:
		Control Cable Mounting
		Accelerator Linkage Movement
		Exhaust System:
		Leaks
		Muffler/Pipes/Flex Tube
		Steering Gear:
		Mounting
		Linkage
		Power Steering:
		Leaks/Fluid Level
		Front Axle & Suspension:
		Toe-In
		Broken Spring Leaves
		Wheel Seal Leaks
		Wheel Bearing Lube Level
		Adjust Brakes

OK	NC	Trans./Aux. Trans./ Transfer Case/Flywheel PTO:
		Leaks/Lube Level
		Mounting
		Torque Bell Housing Cap Screws
		Propeller Shafts:
		Universal Joints
		Yoke/Flange Bolts
		Center Bearing
		Rear Axle/Bogie & Suspension:
		Spring/Trunnion Insulators
		Broken Spring Leaves
		Wheel Seal Leaks
		Adjust Brakes
		Carrier(s):
		Leaks/Lube Level
		Tires:
		Condition/Match
		Pressure/Tread Depth
		Wear Pattern
		Wheels/Rims:
		Condition
		Stud/Nut Torque
		Axle Flange Nut Torque
		Trailer Cord
		Trailer Hoses/Glad Hands
		Fifth Wheel
		PTO/Hoist:
		Lube Level
		Operation
		Safety Equipment:
		Fire Extinguisher Pressure
		ICC Safety Kit
		Flags

NC — Needs Correction

COMMENTS _____

MACK CHASSIS
PREVENTIVE MAINTENANCE SCHEDULE
LUBRICATION CHART

LUBE	ACTION TAKEN	KEY	ITEM
EO-L		A	ENGINE CRANKCASE
EO-L		B	POWER STEERING RESERVOIR
GO-H		C	FRONT WHEEL BEARINGS
GO-H		D	FRONT DRIVE AXLE
		E	FLYWHEEL PTO
		F	TRANSMISSION
		G	TRANSFER CASE
		H	REAR AXLE
MG-C			FRONT DRIVE AXLE
		I	SLIDING SPLINES
		I	UNIVERSALS
		J,K	KING PINS*
		J,K	UNIVERSALS (CARDANS)*
MG-C		L	CAB/HOOD HINGES
EO-L		M	SHUTTERS
		N	ACCELERATOR HINGE PIN
		N	BRAKE TREADLE HINGE PIN
MG-C		N	BRAKE VALVE PLUNGER
MG-C		O	SHIFT LINKAGE
CF-A		P	CAB TILT RESERVOIR
MG-C		Q	SPRING PINS*
		Q	SHACKLES*
		Q	DRAG LINK
		Q	STEERING UNIVERSALS
		Q	SLIP YOKE
		Q	PURGE FITTING
MG-C		R	STEERING GEAR ADAPTER BUSHING
MG-C		S	FRONT SLACK ADJUSTER*
		S	FRONT BRAKE CAMSHAFT*
		S	STEERING KNUCKLE PINS*
		S	CROSS STEERING TUBE SOCKETS*
MG-C		T	CLUTCH RELEASE SHAFT*
		T	CLUTCH RELEASE BEARING
MG-C		U	PROP SHAFT UNIVERSALS
		U	PROP SHAFT SLIDING SPLINE
MG-C		V	REAR BRAKE CAMSHAFT*
		V	REAR SLACK ADJUSTERS*
		V	SPRING PINS*
		W	TORQUE ROD BALL STUDS
		W	SPRING TRUNNION*
AMD		X	SPEEDOMETER ADAPTOR (mech.)
		X	MAXI-MISER
AMD		Y	TACHOMETER ADAPTOR (mech.)

* Indicates lubrication on both sides of vehicle.

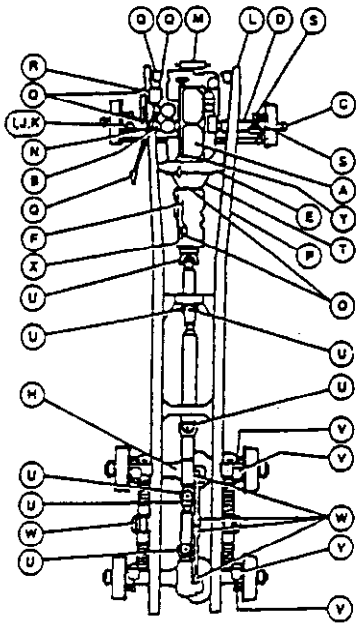

NOTE

Clean all fittings with non-flammable solvent and wipe clean with a rag before applying grease gun.

ACTION TAKEN CODES	LUBRICANT CODES	
Check Level. Add Lubricant if Necessary	EO-L	Multi-Viscosity Engine Oil
Lubricate Fitting	GO-H	Gear Oil
Lubricate Surfaces	MG-C	Chassis Lube
Remove, Clean, Repack Adapter	CF-A	Cab Tilt Fluid
	TF-C-1	Dexron Trans Fluid
	And	Anderol 766
Remove, Clean, Reinstall		

000089a

Live-Bottom Trailer

EQUIPMENT:	INSPECT/CHECK:
WHEEL & RIMS	DAILY
TIRES	DAILY
TIRE PRESSURE	WEEKLY
5TH WHEEL KING PIN PLATE	INSPECT/GREASE DAILY
WHEEL HUBS	INSPECT OIL LEVEL DAILY
SUSPENSION SYSTEM	INSPECT MONTHLY
BRAKE SYSTEM	CHECK/INSPECT WEEKLY
SPRING BRAKES	CHECK/INSPECT SIX MONTH
CONVEYOR SYSTEM	CHECK/INSPECT DAILY CHANGE OIL/YEARLY LUBE WEEKLY
CONVEYOR BELT ADJUSTMENT	CHECK/INSPECT DAILY
LIGHTING AND WIRING	INSPECT DAILY
HYDRAULIC SYSTEM	INSPECT DAILY

Hopper/Soil Dump Conveyor System
(Wilson Mfg. Towable Conveyor)

4.1. Maintenance plan

ATTENTION!
Always ensure that the engine has stopped before performing maintenance work.
For the handling of used oil, filters and cleaners adhere to the rules of legislation.
Protect the starter key against unauthorized use.
Disconnect the negative terminal of the battery.
After maintenance work check to see if all tools are removed and all safety devices are in place.
Before starting look out for persons within the dangerous area around the engine and the working equipment.

	Intervals	Maintenance work	Chapt.
8-15	Every 8–15 hours	- Check lub.-oil level. - Check durst level in container of cyclone pre-cleaner.	4.2.1. 4.2.2.
250	Every 250 hours	- Change lub.-oil. * - Clean blower fan, cooling ribs and oilcooler. - Check condition of airfilter(s) (with dusty working conditions). - Check all safety devices for proper functioning. - Check screw connections for tightness. - Check fuel prefilter for contamination and replace, if necessary. ** **The cylinder head nuts must NOT be tightened.**	4.2.3. 4.2.4. 4.2.6. 5.3. 5.4.
500	Every 500 hours	- Replace fuel prefilter. - Maintain air filter(s). - Check and adjust tappet clearance. - Change lub.-oil and oilfilter. *	4.2.5. 4.2.6. 4.2.7. 4.2.8.
1000	Every 1000 hours	- Replace fuel filter.	4.2.9.

* Please also refer to page 22.

** The degree of contamination of fuel, the care when filling in fuel as well as the contamination inside fuel tank are decisive factors for replacement intervals of the fuel prefilter.

MAINTENANCE GUIDELINES FOR 36" TOWABLE CONVEYOR

DIESEL ENGINE:

The diesel engine is lubricated and serviced from the factory, however it is necessary to follow the suggested maintenance schedule provided in the engine operator's manual. (See section on engine.)

WAGON:

1) Grease spindles weekly.
2) Keep proper air pressure in tires. (Manufacturer's suggested: 90 PSI.)

CONVEYOR:

1) Keep head free of build-up.
2) Keep wiper adjusted against belt.
3) Always run conveyor until empty.
4) Weekly lubrication of all bearings and idlers will increase their life.
5) Gear box oil should be checked monthly and changed annually.
6) It is important to keep belt tight and tracking properly. Tension is obtained at the intermediate drive. Keep both take-ups adjusted evenly.
7) Track belt at the head, tail, and drive.

NOTE Literature on components is supplied for individual maintenance and operation.

SAFETY FOR 36" TOWABLE CONVEYOR

1) Covers and guards are provided for your protection. ♦♦ ♦♦♦ operate equipment without these in place.

2) Turn power off before doing any maintenance or adjustments. (Remove key from diesel engine.)

3) Keep hands, feet, and clothing from moving parts.

4) The exhaust system on the engine becomes extremely hot when in use. ♦♦ ♦♦♦ ♦♦♦♦♦!

5) ♦♦ ♦♦♦ attempt to ride on the unit while traveling.

6) Follow safety guidelines in diesel engine manual when performing any maintenance.

7) Pull unit slowly (High speed could result in conveyor turning over).

Caterpillar 416B, 426B, 428B, 436B & 438B Backhoe Loaders Lubrication and Maintenance Intervals

When Required ..... Item

Fuel System – Clean filter elements 25
Cab Air Filter – Clean filter element 19
Fuse Panel and Circuit Breaker – Replace fuses 9
Air Conditioner – Check 18
Bucket Teeth (if equipped) - Replace tips 11

Every 10 Service Hours or Daily

Windows – Clean 20
Seat Belt – Inspect 10
Engine Crankcase – Check oil level 24
Hydraulic System – Check oil level 27
Transmission/Torque Converter – Check oil level 7
Radiator – Check coolant level 26
Air Cleaner – Inspect/Service Bowl and Elements 5
Water Separator – Drain 4
Fuel Tank – Fill 6
Lubrication Grease Points – Lubricate 13
Wheel Nuts – Check torque until the specified torque is maintained 3
Brake Fluid – Check level 17
Emergency Steering – Check 16

Every 50 Service Hours or Weekly *

Parking and Service Brakes – Check the brakes on new or rebuilt machines for the first time at 50 Service Hours. Then check at the normal interval thereafter 14
Front Powered Axle (If Equipped) - Lubricate the fittings 1

Every 250 Service Hours or Monthly *

Engine Crankcase (Heavily loaded machines) - Change oil and filter 24
Radiator – Add coolant additive 26
Rear Axle – Check oil level 15
Front Powered Axle (If Equipped) – Check oil level 1
Alternator, Fan and Compressor Belts – Inspect/adjust 22
Batteries – Inspect 21
Parking Brakes – Check/adjust 14
Extendable Stick (If Equipped) – Inspect/replace 12

Every 500 Service Hours or 3 Months *

Engine Crankcase (Lightly loaded machines) - Change oil and filter 24
Hydraulic System – Change filter element 27
Transmission/Torque Converter – Change filter/wash breather 7
Drive Shaft Joints (MFGM) – Lubricate 8
Fuel System – Change filter elements 25

Every 1000 Service Hours or 6 Months *

Transmission/Torque Converter – Change oil 7
Front Wheel Bearings – Lubricate 2
Rear Axle – Change oil 15
Front Powered Axle (If Equipped) – Change oil 1

Every 2000 Service Hours or 1 Year *

Hydraulic System – Change oil 27
Engine Valve Lash – Adjust 23

Every 3000 Service Hours or 2 Years *

Radiator – Clean/flush 26

* First Perform Previous Service Hour Items

Refill Capacities (Approximate)

Compartment or System	Liters	U.S. Gallons	Imperial Gallons
Engine Crankcase Oil w/Filter	8	2.1	1.8
Hydraulic Tank Oil	37.9	10.0	8.4
Transmission and Torque Converter	10	2.6	2.2
Radiator Coolant	11.4	3	2.5
Cooling System Coolant (N/A Engines)	15.2	4	3.3
Cooling System Coolant (T/A Engines)	17.8	4.7	3.9
Fuel Tank	106.12	28	23.35
Rear Axle	18.5	4.8	4.1
Front Powered Axle - Center Axle	7.5	2.0	1.7
Front Powered Axle Final Drives (Each Side)	.75	.20	.17

This Lubrication and Maintenance Interval Chart is for Product Identification Numbers 8SG1-UP, 5YJ1-UP, 7EJ1-UP, 6MJ1-UP, and 3KK1-UP. For additional information, refer to SEBU6414 Operation & Maintenance Manual.

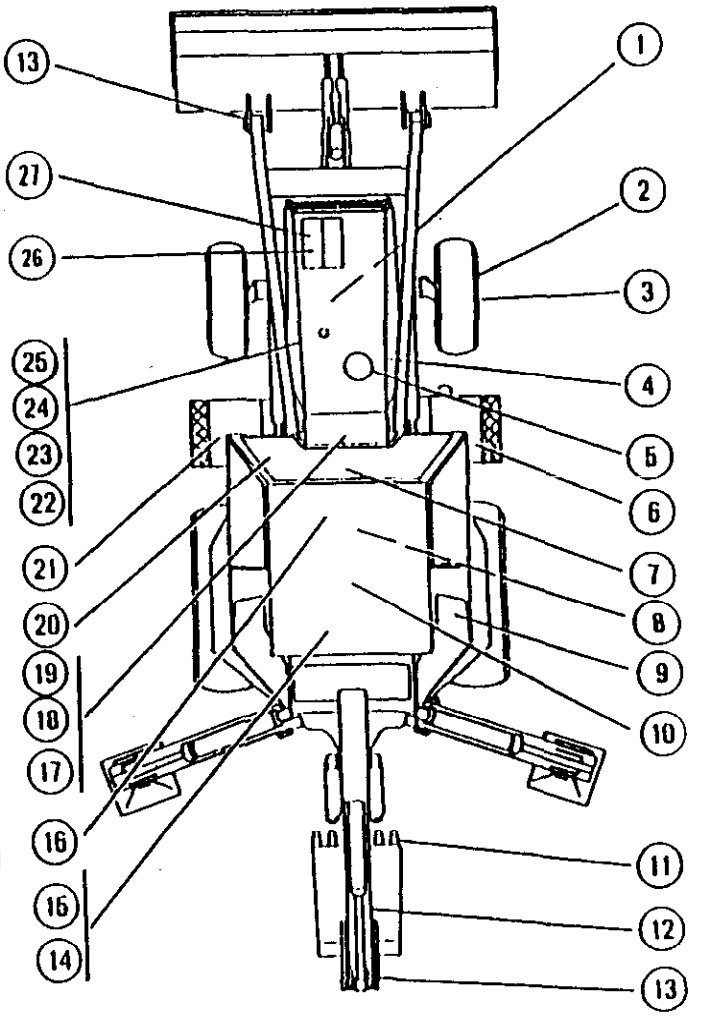

Daily Walk-Around Inspection

Machine

For maximum service life of the machine, make a thorough walk around inspection of the machine daily. Report or repair any damage, replace any worn or missing parts, tighten any loose fasteners.

Look around and under the machine for such items as loose fasteners, trash build up, oil or coolant leaks, broken or worn parts or other evidence of damage.

Check lights for broken bulbs or lenses. Make sure that all covers and guards are firmly in place. Inspect for damage.

Inspect all steps, walkways, handholds for condition and cleanliness. Check Rollover Protective Structure (ROPS) for damage, loose bolts.

If any liquid levels are found low (hydraulic system oil, engine crankcase oil, cooling system coolant, etc.), refill to correct level and record amount and type of liquid added.

Front and Rear Axles (1) (15)

Check axle housings for signs of leakage, loose or missing hardware.

Wheels and Tires (2) (3)

Inspect rims and tires for damage, excessive wear, loose or missing fasteners. Remove rocks from tire tread.

Check for missing inflation valves. Measure tire pressure.

Engine Air Intake (5)

Check precleaner bowl for dust accumulation, debris, or damage. Empty precleaner bowl before dirt reaches FULL mark.

Operator's Compartment (10)

Inspect compartment for cleanliness. Check all instrument panels for broken gauges, indicators, and lights. Inspect seat belt and mounting for excessive wear or damage.

Check rear view mirrors for cracks, loose hardware, and correct adjustment. Inspect windshield wipers for worn or damaged blades, and windshield washer for correct fill.

Buckets and Linkage (11)

Check bucket for loose or missing bolts, teeth, and edges. Check attachments, cylinders, and linkage for excessive wear or damage.

Check external hydraulic lines for leakage, rubbing wear or loose fasteners. Inspect cylinder rods for scoring. Check all mounting brackets for cracks.

Engine Compartment (22)

Inspect for oil, fuel, and coolant leaks. Remove any trash build-up. If the oil level check shows milky oil, do NOT start the engine.

Cooling System (26)

Check for coolant leaks. Check coolant level. Check for cracked hoses, loose hose clamps and connections. Remove any trash build-up.

If machine is equipped with temperature recorder labels, record highest temperature showing on the label.

Hydraulic System (27)

Inspect hydraulic system for signs of leakage. Check tank, all hoses, tubes, plugs, joints and fittings.

General

For more detailed and additional information, check the "Walk-Around Inspection" section in the Operation & Maintenance Manual for this machine.

Never start or operate a machine or any implement or attachment, if leakage, damage, loose or missing parts or fasteners or any other suspicious condition is discovered or present.

Make sure that the machine and all implements and attachments are in good operating condition, and that all necessary repairs, replacements, cleanup, etc. are completed before starting or operating any equipment.

Caterpillar 966F Series II Wheel Loader Lubrication and Maintenance Intervals

When Required — Item

Engine Air Intake System – Service filters 14
Ether Starting Aid (If Equipped) – Replace cylinder 13
Fuel System – Service when loss of power 24
Fuses and Circuit Breakers – Replace/reset 12
Windshield Wipers and Washer – Inspect 25, 29
Bucket Edge – Replace if damaged 1
Bucket Tips – Replace if damaged 35
Filter Inspection – Inspect used filter for debris 15
Ride Control Accumulator (If Equipped) – Check pressure

Every 10 Service Hours or Daily

Engine Crankcase Oil – Check oil level 15
Transmission System Oil – Check oil level 9
Hydraulic Tank Oil – Check oil level 10
Radiator – Check coolant level 17
Walk-Around Inspection – Inspect machine
Fuel Tank – Drain water and sediment 27
Air Reservoir – Drain moisture and sediment 17
Seat Belt – Inspect 11
Brakes, Indicators and Gauges – Test 8
Back-up Alarm – Test 18

Every 50 Service Hours or Weekly *

Cab Air System – Clean filters 28
Bucket Lower Pivot Bearings – Lubricate 2 fittings 3
Tires – Check inflation pressure 5

Every 100 Service Hours or 2 Weeks *

Rear Axle Trunnion – Lubricate 2 fittings 23
Steering Cylinder Bearings – Lubricate 4 fittings 23
Bucket Upper Pivot Bearing – Lubricate 1 fitting 2
Lift Arm and Cylinder Linkage – Lubricate 6 fittings 7, 31, 33
Bucket Cylinder and Linkage Bearings – Lubricate 4 fittings 7, 31, 33
Logging Fork Clamp (If Equipped) – Lubricate 6 fittings

Every 250 Service Hours or Monthly *

Engine Oil and Filter – Change. If the sulfur content in the fuel is greater than 1.5% by weight, use an oil with a TBN of 30 and reduce the oil change interval by one half 15
Engine Valve Lash – Adjust on new or reconditioned engines, then at normal interval thereafter 22
Engine Crankcase Breather – Clean 21
Cooling System – Add coolant additive 17
Brakes – Test 8
Brake Oil Reservoirs (If Equipped) – Check oil level 28
Drive Shaft Spline – Lubricate fitting 30
Fan Bearing – Lubricate fitting 19
Air Conditioner (If Equipped) – Test 19
Fan and Alternator Belts – Inspect/adjust 19
Batteries – Inspect 16, 20

Every 500 Service Hours or 3 Months *

Transmission Oil Filter – Change filter 9
Hydraulic Oil System – Change filter 10
Fuel System – Change filter/clean screen 24
Fuel Tank Cap and Fill Screen – Clean 27

Every 1000 Service Hours or 6 Months *

Transmission System Oil – Change 9
Drive Shaft Universal Joints – Lubricate 5 fittings 6
Drive Shaft Support Bearing – Lubricate fitting 7
Frame Pivot Bearings – Lubricate 2 fittings 30
Rollover Protective Structure (ROPS) – Inspect 25

Every 2000 Service Hours or 1 Year *

Hydraulic Tank – Change oil 10
Differentials – Change oil 26, 33,
Engine Valve Lash and Fuel Injector Timing – Adjust 22
Engine Valve Rotators – Check 22
Wet Disc Brakes – Inspect 26, 33

Every 3000 Service Hours or 2 Years *

Cooling System Coolant – Change 17

* First Perform Previous Service Hours Items

Refill Capacities

Compartment or System	Liters	U.S. Gal.	Imperial Gal.
Cooling System	43.3	11.3	9.5
Hydraulic Tank	140	36.4	30.8
Fuel Tank[1]	304	79	66.9
Fuel Tank[2]	377	98	82.9
Engine Crankcase	28	7.3	6.2
Transmission	59	15.3	13
Front Differential[3]	47	12.2	10.3
Front Differential[4]	65	16.9	14.3
Rear Differential[3]	47	12.2	10.3
Rear Differential[4]	65	16.9	14.3
Brake Reservoirs (If Equipped)	6	1.6	1.3

[1] 1SL1-1343 & 9YJ1-2123.
[2] 1SL1344-Up, 9YJ2124-Up.
[3] 1SL1-1017, 9YJ1-1187 & 8BG1-2361.
[4] 1SL1018-Up, 9YJ1188-Up & 8BG2362-Up.
For additional detailed information, refer to SEBU6627-02 Operation & Maintenance Manual.

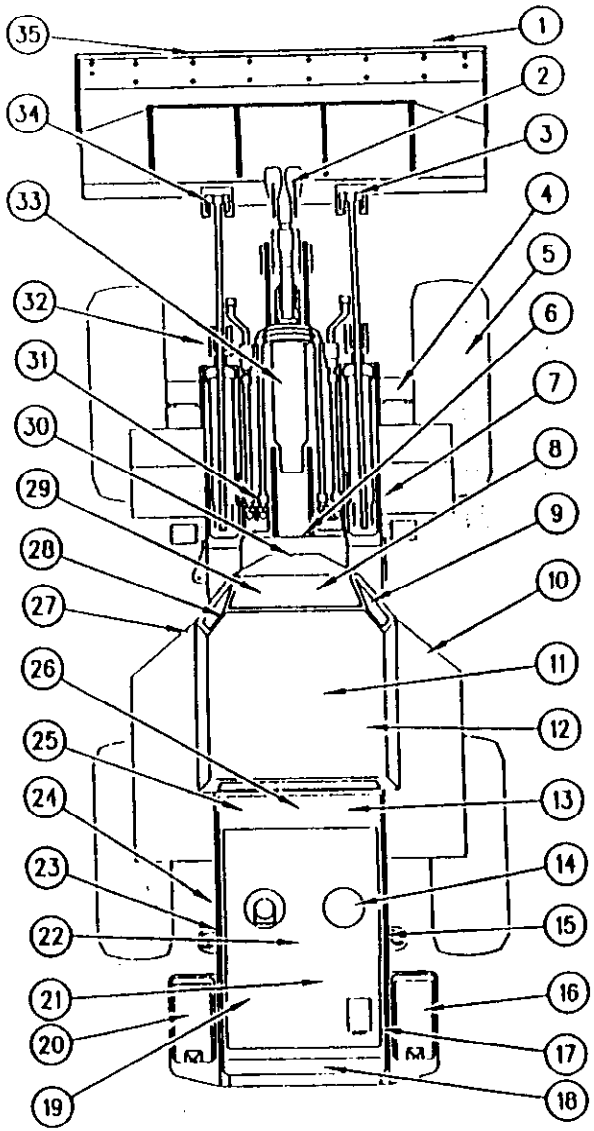

D65364

John Deere Skid Steer Loader Model 6675

SERVICE INTERVAL CHART

Hourly Interval

Periodic Service	5	10	50	100	200	500	1000
Check engine oil level	I	●					
Check hydraulic system oil level		●					
Clean radiator and oil cooler from trash build up (When operating in extremely dirty conditions, service sooner or service per EIM)		●					
Check coolant level		●					
Check alternator belt tension		I	●				
Lubricate boom & cylinders			●				
Lubricate mounting plate latches (When operating in extremely dirty conditions, service sooner)			●				
Check tire pressure	I		●				
Check parking brake adjustment				●			
Change engine oil and filter (When operating in extremely dirty conditions, service sooner or service per EIM)			I		●		
Clean fuel filter sediment bowl				●			
Lubricate brake linkage				●			
Lubricate control pedal linkage				●			
Tighten cab hardware					●		
Replace in line fuel filter					●		
Replace primary air cleaner element (When operating in extremely dirty conditions, service sooner or service per EIM)						●	
Replace secondary air cleaner element (OR every third primary [illegible] replacement, whichever first.)							●

SERVICE INTERVAL CHART

Hourly Interval

Periodic Service	5	10	50	100	250	500	1000
Check gear box oil level						●	
Check final drive oil level						●	
Check final drive chain tension				I			●
Check oil reservoir breather						●	
Tighten all hardware	I			I			●
Change hydraulic oil filter (The EIM monitors the hydraulic oil filter. Replace the filter at 500 hour intervals OR when the EIM indicates a dirty filter, which ever occurs first.)		I				●	
Change hydraulic oil							
Lubricate axles							

KEY: ● = REQUIRED SERVICE HOUR INTERVAL (Continue repeating service intervals)

I = PERFORM AT INITIAL BREAK-IN (Thereafter at hour interval shown)

Grease Fittings

- Grease fittings are provided at the twenty-four (24) points indicated in the illustration on the following page.
- The number indicates how many fittings are found at that location.
- Lubricate every 10 hours.
- If any grease fittings are missing, replace them immediately.
- Clean fittings thoroughly before using grease gun.
- Lubricate with John Deere multipurpose grease or an equivalent until grease oozes out of the sides.

SERVICE

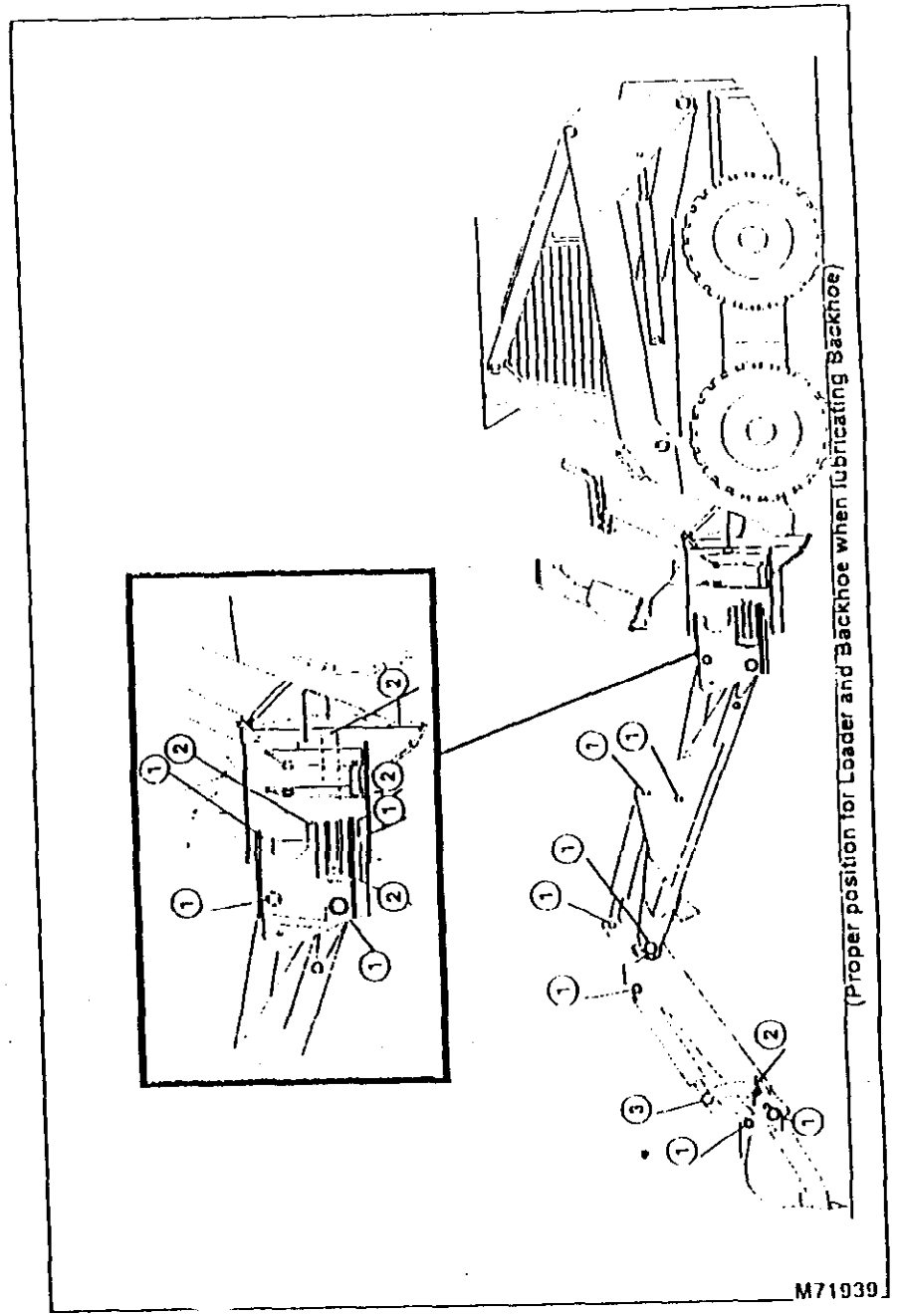

SERVICE MACHINE SAFELY

Avoid High Pressure Fluids

- Escaping fluid under pressure can penetrate the skin causing serious injury. Avoid the hazard by relieving pressure before disconnecting hydraulic or other lines. Tighten all connections before applying pressure.
- Search for leaks with a piece of cardboard. Protect hands and body from high pressure fluids.
- If an accident occurs, see a doctor immediately. Any fluid injected into the skin must be surgically removed within a few hours or gangrene may result. Doctors unfamiliar with this type of injury should reference a knowledgeable medical source. Such information is available from Deere & Company Medical Department in Moline, Illinois, U.S.A.

SERVICE

Grease

Use grease based on the expected air temperature range during the service interval.

John Deere Moly High Temperature EP Grease and John Deere High Temperature EP Grease are recommended.

Other greases that may be used are:

- SAE Multipurpose EP Grease with 3 to 5 percent molybdenum disulfide.
- SAE Multipurpose EP Grease.
- Greases meeting Military Specification MIL-G-10924C may be used as arctic grease.

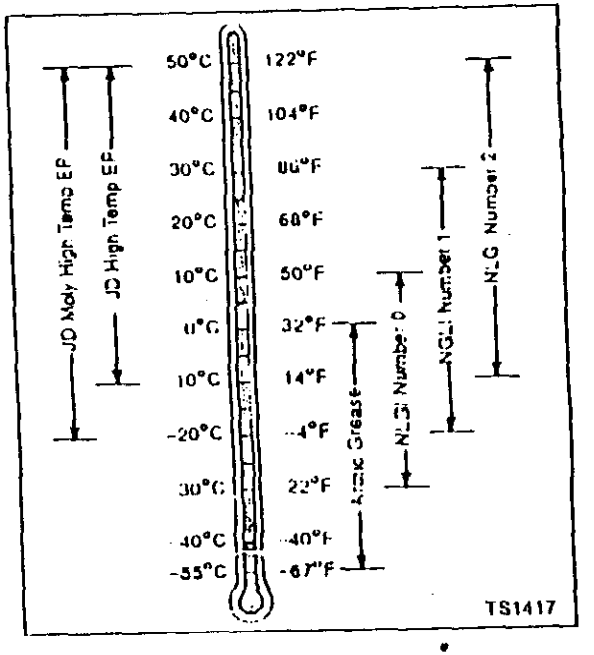

John Deere Farm Tractor - Model 7710
(With Attachments)

SERVICE INTERVAL CHART
DAILY OR 10 HOURS—250 HOURS—750 HOURS

Item	Daily or 10 Hours	250 Hours	750 Hours
Check Engine Oil Level and Coolant Level	•		
Drain Water Separator, if equipped	•		
Check Transmission-Hydraulic Oil Level	•		
Lubricate Rear Axle Bearings *	•		
Lubricate 2WD Front Wheel Bearings, Front Axle Pivot Pin, Steering Spindles/Cylinder Ends and Tie Rod Ends *	•		
Lubricate MFWD Tie Rod, Kingpins and Axle Pivot *	•		
Lubricate Front PTO Shaft *	•		
Check All Tires	•		
Change Engine Oil and Filter		•	
Check Manual Brakes		•	
Service Batteries and Drain Fuel Tank Sump		•	
Inspect Tractor for Loose Bolts		•	
Check Neutral Start System and Inspect Fire Extinguisher		•	
Clean Operator Enclosure Air Filters		•	
Lubricate Three-Point Hitch and Lift Links and Lubricate Rear Window Hinge		•	
Lubricate 2WD Front Axle Pivot Pin, Steering Spindles/Cylinder Ends and Tie Rod Ends		•	
Lubricate MFWD Tie Rod, Kingpins, and Axle Pivot and Check MFWD Axle Housing and Wheel Hub Oil Level		•	
Check Front PTO Housing Oil Level and Lubricate Front PTO Shaft		•	
Lubricate Rear Axle Bearings			•
Check Air Intake System and Check Engine Idle Speeds			•
Add Coolant Conditioner			•
Replace Transmission and Hydraulic Filter Elements			•
Clean Fuel Tank Vent Filter			•

John Deere Farm Tractor - Model 7710

SERVICE INTERVAL CHART
1500 HOURS—2000 HOURS—ANNUAL—TWO YEARS
4500 HOURS OR FIVE YEARS—AS REQUIRED

Item	1500 Hours	2000 Hours	Annual	Every Two Years	Every 4500 Hours or Five Years	As Required
Change Transmission-Hydraulic Oil	•					
Clean Hydraulic Oil Suction Screen	•					
Change MFWD Hub and Axle Housing Oil	•					
Check Fuel Injection Nozzles	•					
Lubricate Draft Link Support Shaft Bushing	•					
Check Belt Tensioner	•					
Clean and Repack Front Wheel Bearings	•					
Change Front PTO Housing Oil	•					
Adjust Engine Valve Clearance		•				
Replace Primary and Secondary Air Cleaner Elements			•			
Replace Operator Enclosure Air Filters			•			
Lubricate PTO Shaft			•			
Drain, Flush, and Refill Engine Cooling System				•		
Replace Thermostats				•		
Replace Engine Crankshaft Damper					•	
Replace Transmission and Hydraulic Filter Elements						•
Replace Fuel Prefilter and Filter Elements						•
Replace Water Separator Element						•
Bleed Fuel System						•
Bleed Brakes						•
Check Engine Compartment for Debris						•
Clean Radiator and Oil-Cooler-Condenser						•
Service Air Pre-Cleaner and Cleaner						•
Replace Fan Belt						•
Replace and Adjust Lights						•
Replace Fuses and Relays						•
Service Air Conditioner						•

Lubrication and Maintenance/10 and 50 Hour

LUBRICATE LOADER

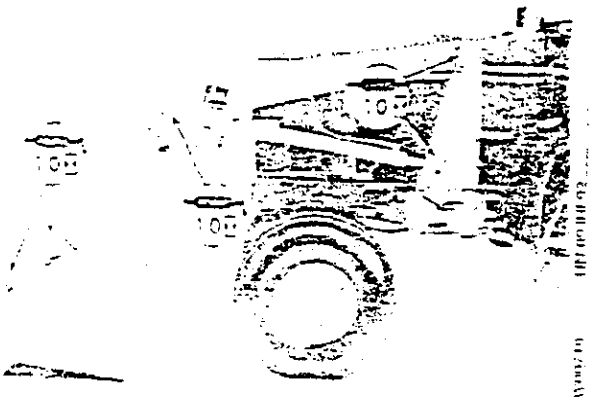

⚠ CAUTION: Help prevent personal injury caused by unexpected movement of the loader. Lower loader to the ground, engage parking brake or place transmission in "PARK", shut off engine and remove key before lubricating or servicing the loader.

1. Dump bucket and lower to the ground.
2. Lubricate twelve fittings, six on each side of loader.
3. For loader with QUICK-CHANGE bucket attach, lubricate bucket latch pins.

LUBRICATE GRAPPLE

1. Lubricate two fittings on back of pivot arms.
2. Apply grease, oil or spray lubricant to cylinder pivots.

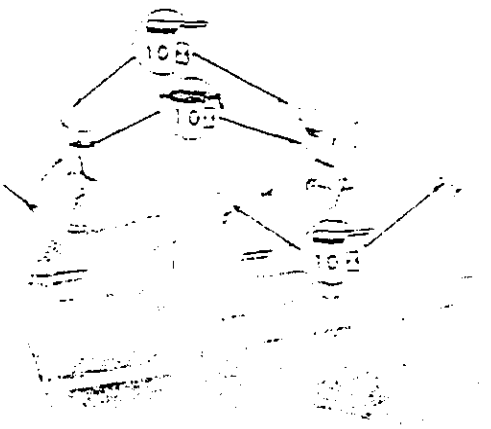

SUPREME CUTTER/MIXER/FEEDER OPERATING INSTRUCTIONS CONT'D.

Tractor Operating Speed - When the mixture consists of a HIGH PERCENTAGE OF HAY, A SLOWER PTO SPEED IS RECOMMENDED if tractor horsepower is sufficient! Also, when working with large quantities of hay, a lower tractor PTO speed reduces the chances of spillage.

Stopping the Mixing Screw When Fully Loaded - It is recommended to AVOID STOPPING THE MIXING SCREW WHEN FULLY LOADED if at all possible. If a fully loaded tub is left sitting for long periods of time, or if the machine has to travel over very rough terrain for unloading purposes, the mixed ration will settle in the tub and on the flighting of the screw. The HORSEPOWER REQUIREMENT TO RESTART the screw with the tub fully loaded is MUCH HIGHER and causes MORE STRESS ON THE TRACTOR PTO CLUTCH.

MAINTENANCE:

1) Always ensure that the BATTERY IS CHARGED in order to avoid incorrect scale readings, or damage to the scale indicator.

2) Check OIL LEVELS for the PLANETARY DRIVE DAILY and the GEARBOX EVERY 3 MONTHS. We recommend SAE 80/90 GEAR LUBE OIL (use in mild climate regions) - OR - SAE 70/80 GEAR LUBE OIL (use in cold climate regions) for both the right angle drive and planetary. Damage caused by operating machine with low oil levels will not be covered by warranty.

   Planetary - filler on side of platform (black cap), fill to level on sight gauge

   Right Angle Drive - Models 350, 425, 500 & 600 - on back of gearbox, check safe oil level between filler plug and lower plug (pages 25 & 26)

   Right Angle Drive - Model 700 - on front side of gear box check safe oil level (pages 25 & 26)

SUPREME CUTTER/MIXER/FEEDER OPERATING INSTRUCTIONS CONT'D.

3) GREASE universal joints on PTO drive REGULARLY (do not forget PTO universal joint which is underneath the machine by the planetary drive) (page 24)

4) GREASE unloading elevator bearing periodically (page 24)

5) Adjust elevator chain tension at the take up bearing, located at the lower end of the of elevator.

6) 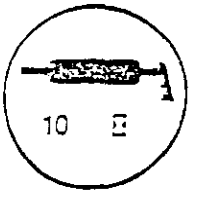

IMPORTANT: Tower bushing greasing point, located on side of machine (in front of wheel - connected to copper tube) must be GREASED EVERY 10 HOURS, as indicated by grease gun decal (page 24)

WARNING: AGAIN, WE REMIND YOU, NEVER ENTER, REACH INTO OR PUT ANY FOREIGN OBJECTS OR IMPLEMENTS INTO THE MIXING CHAMBER. KEEP CHILDREN A SAFE DISTANCE FROM THE MACHINE!

Supreme Grinder/Mixer - Model 700

SUPREME CUTTER/MIXER/FEEDER - GREASE LOCATIONS

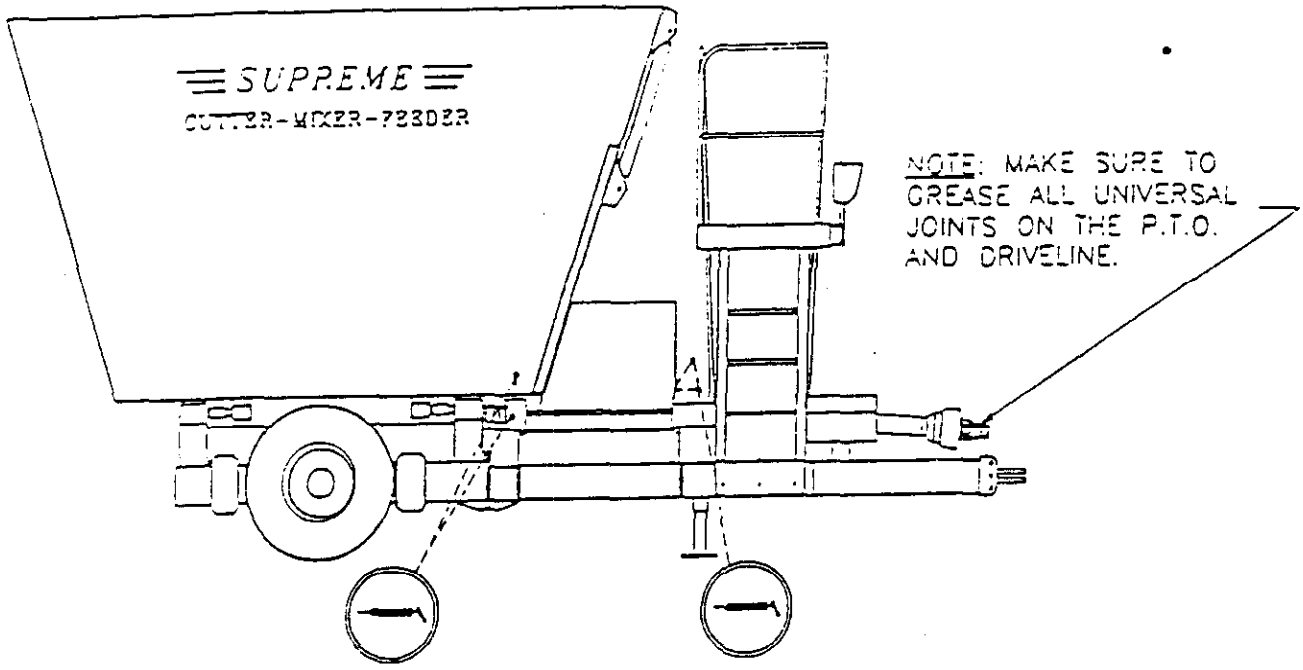

RIGHT-HAND SIDE VIEW

NOTE: THERE ARE FOUR (4) GREASE NIPPLES FOR THE CONVEYER.

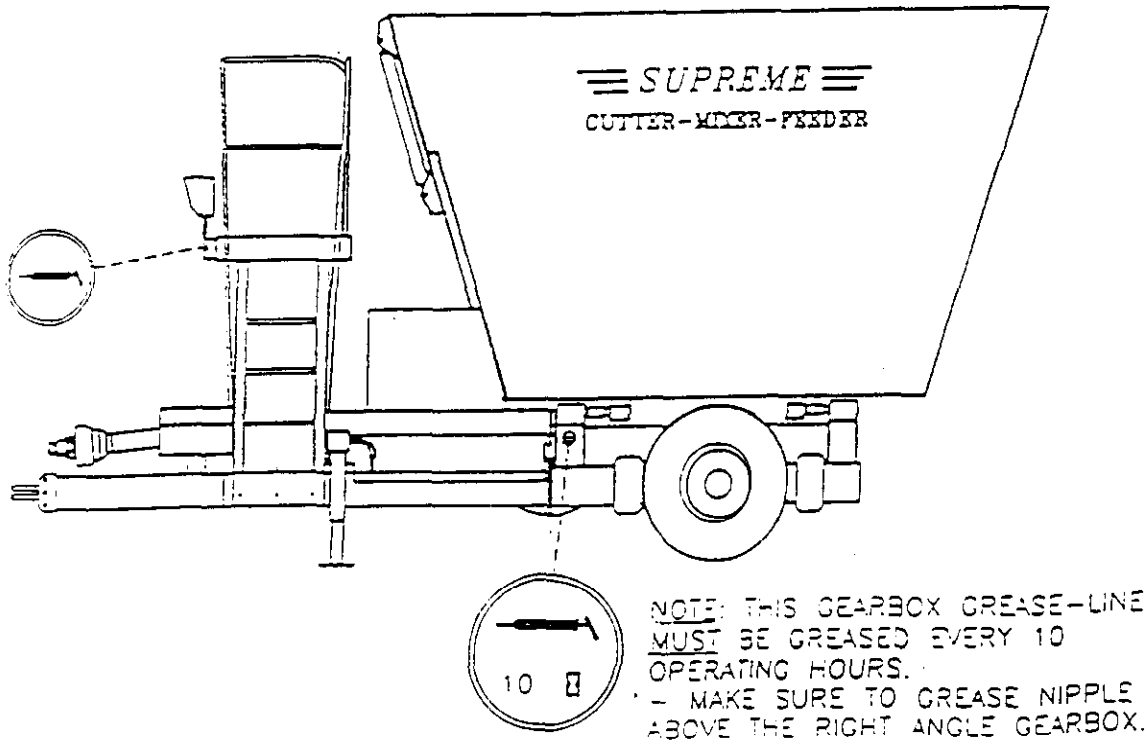

LEFT-HAND SIDE VIEW

SUPREME CUTTER/MIXER/FEEDER MISCELLANEOUS INSTRUCTIONS

"RIGHT ANGLE GEARBOX" OIL FILLING INSTRUCTIONS

MODELS 350, 425, 500, 600 & 700
SAE 80/90 GEAR OIL -OR- SAE 70/80 GEAR OIL

MODELS 350, 425, 500 & 600: REFER TO THE DRAWING TITLED "GEARBOX T269" (PAGE 26)

MODEL 700: REFER TO THE DRAWING TITLED "GEARBOX T301" (PAGE 26)

THE RIGHT ANGLE GEARBOX ON EACH OF THE ABOVE MODELS IS DETACHABLE FROM THE TWO STAGE PLANETARY GEARBOX BY FOUR (4) BOLTS AND THEREFORE HAS AN INDEPENDENT LUBRICATING SYSTEM.

1) REMOVE FILL PLUG

2) REMOVE OIL LEVEL PLUG

3) FORCE OIL INTO OIL FILL PLUG USING A HAND PUMP OR A PRESSURE PUMP, UNTIL OIL RUNS OUT OF THE OIL LEVEL PLUG HOLE

4) REPLACE AND TIGHTEN PLUGS

****

"PLANETARY DRIVE" OIL FILLING INSTRUCTIONS - (ALL MODELS)

MODELS 350, 425, 500, 600 & 700
SAE 80/90 GEAR OIL -OR- SAE 70/80 GEAR OIL

REFER TO THE DRAWINGS TITLED: "GEARBOX T269" (PAGE 26)
"GEARBOX T301" (PAGE 26)

1) REMOVE SUPPLY LINE "A" AND RETURN LINE "B" FROM OIL RESERVOIR AND TEMPORARILY PLUG PORTS ON RESERVOIR

2) FORCE OIL INTO SUPPLY LINE "A" BY MECHANICAL OR AIR PUMP UNTIL OIL CIRCULATES THROUGH AND COMES OUT LINE "B"

3) CONNECT BOTH LINES TO OIL RESERVOIR

4) TOP UP OIL IN RESERVOIR TO SIGHT GLASS

** USE SAE 80/90 GEAR OIL IN MILD CLIMATE REGIONS
** USE SAE 70/80 GEAR OIL IN COLD CLIMATE REGIONS

****

TORQUE SPECIFICATIONS
MODELS 350, 425, 500, 600 & 700

1) PLANETARY GEARBOX TO FLOOR - 150 FT/LBS

2) SCREW RIGHT ANGLE GEARBOX TO PLANETARY - 175 FT/LBS

Supreme Grinder/Mixer - Model 700

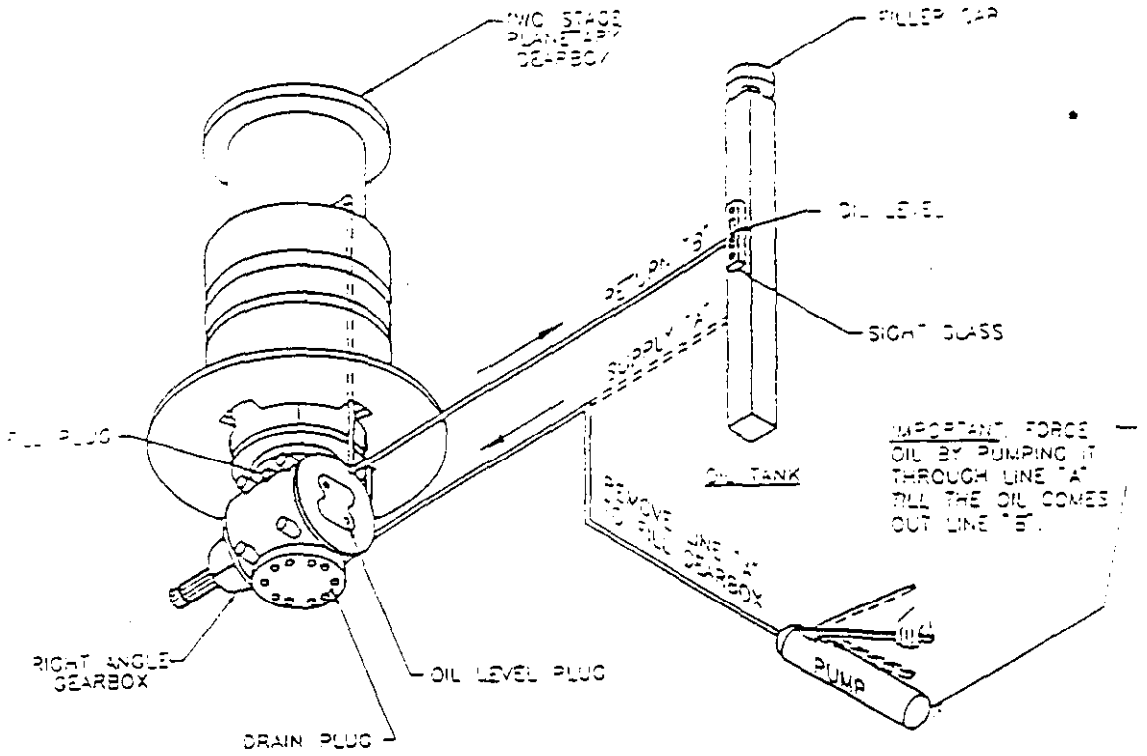

GEARBOX T253
(MODELS 350, 425, 500 & 600)

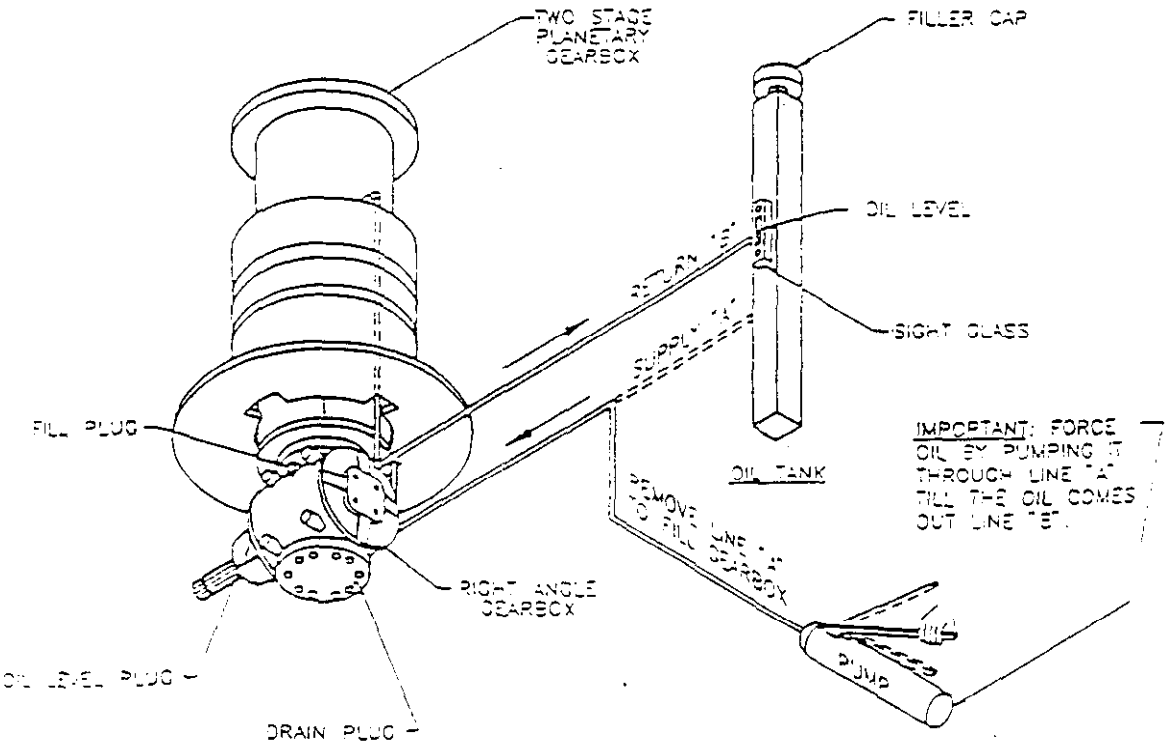

GEARBOX T201
(MODEL 700)

Scarab Windrow Turner - Model 20HYD450

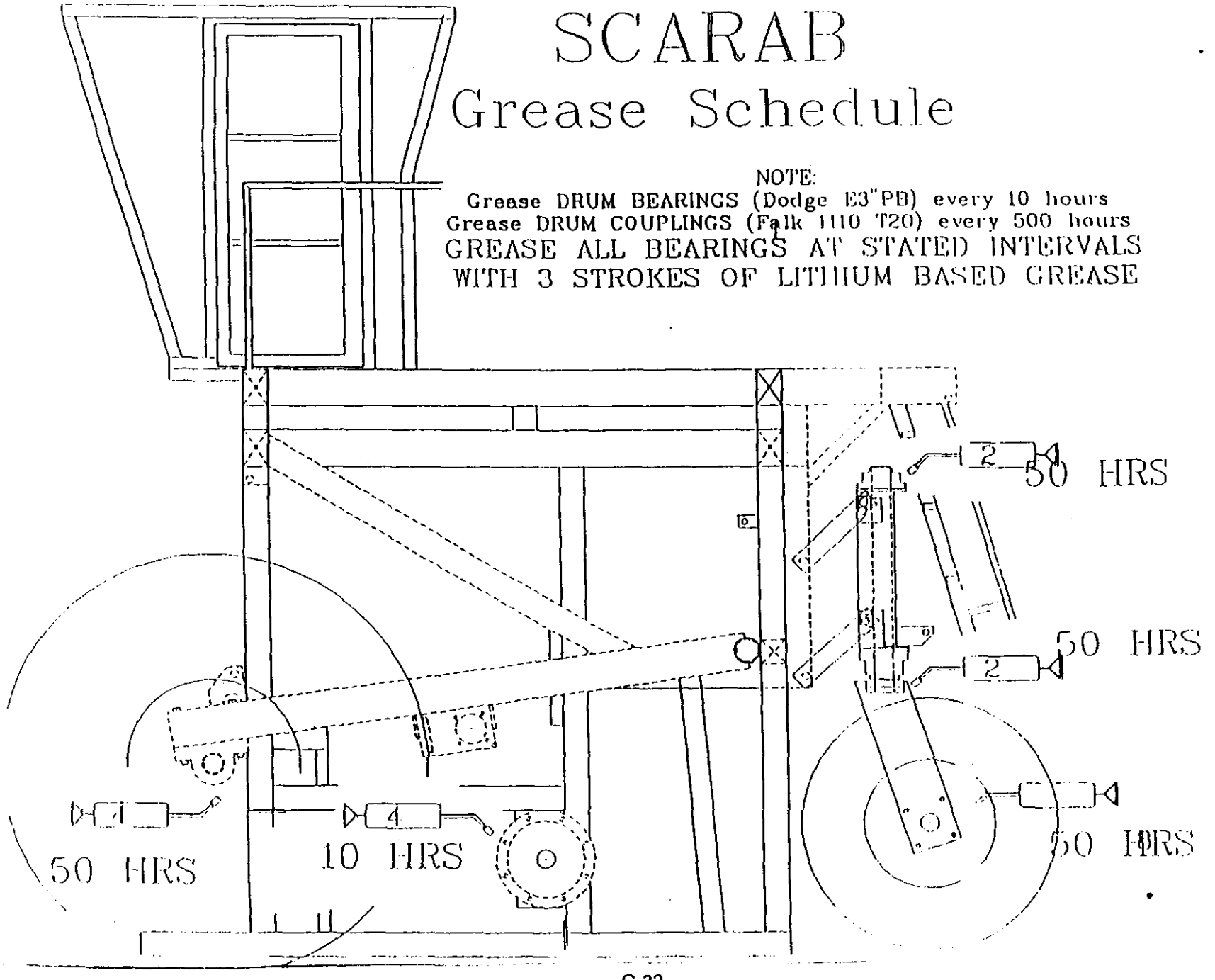

Scarab Windrow Turner - Model 20HYD450

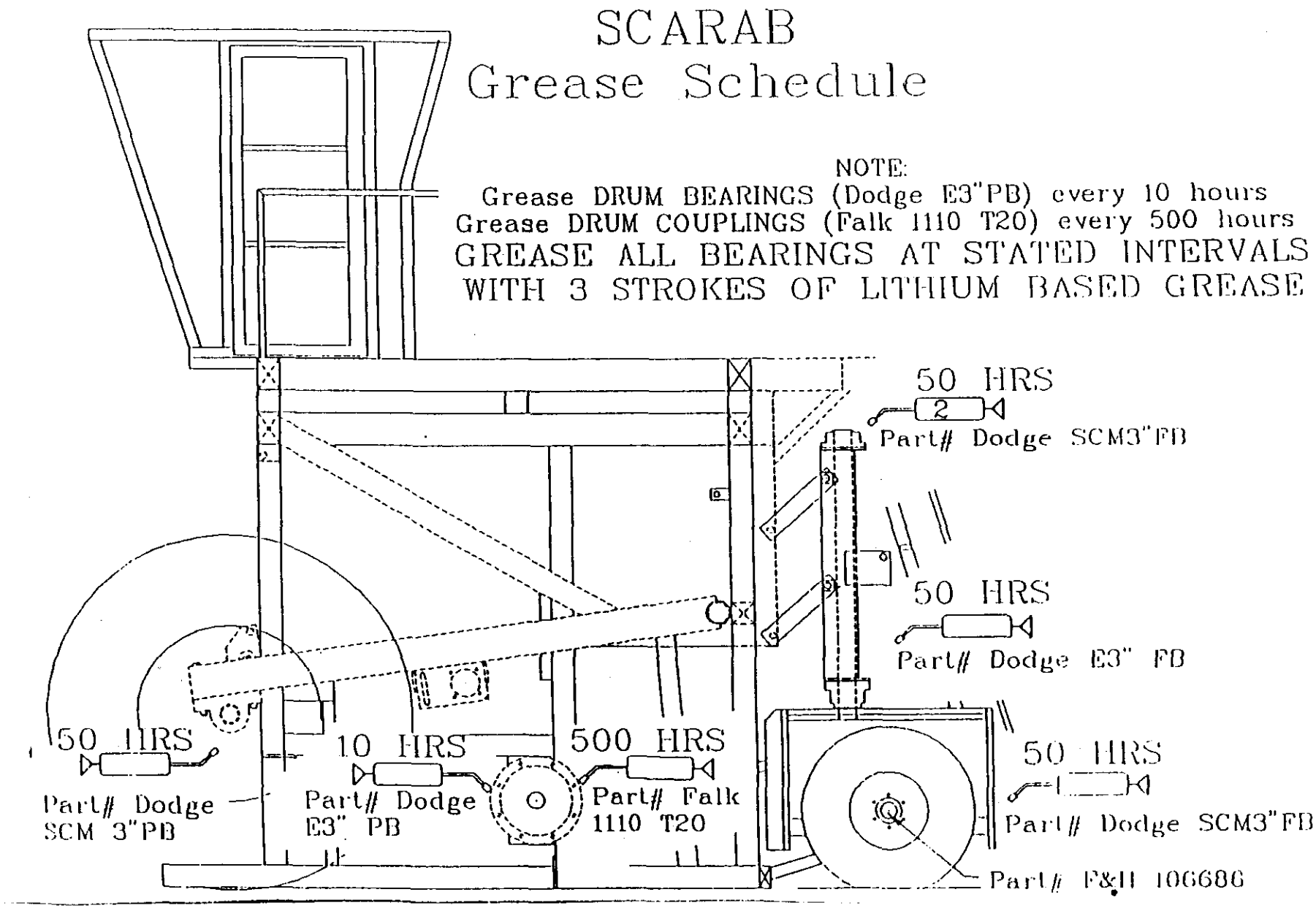

Scarab Windrow Turner - Model 20HYD450

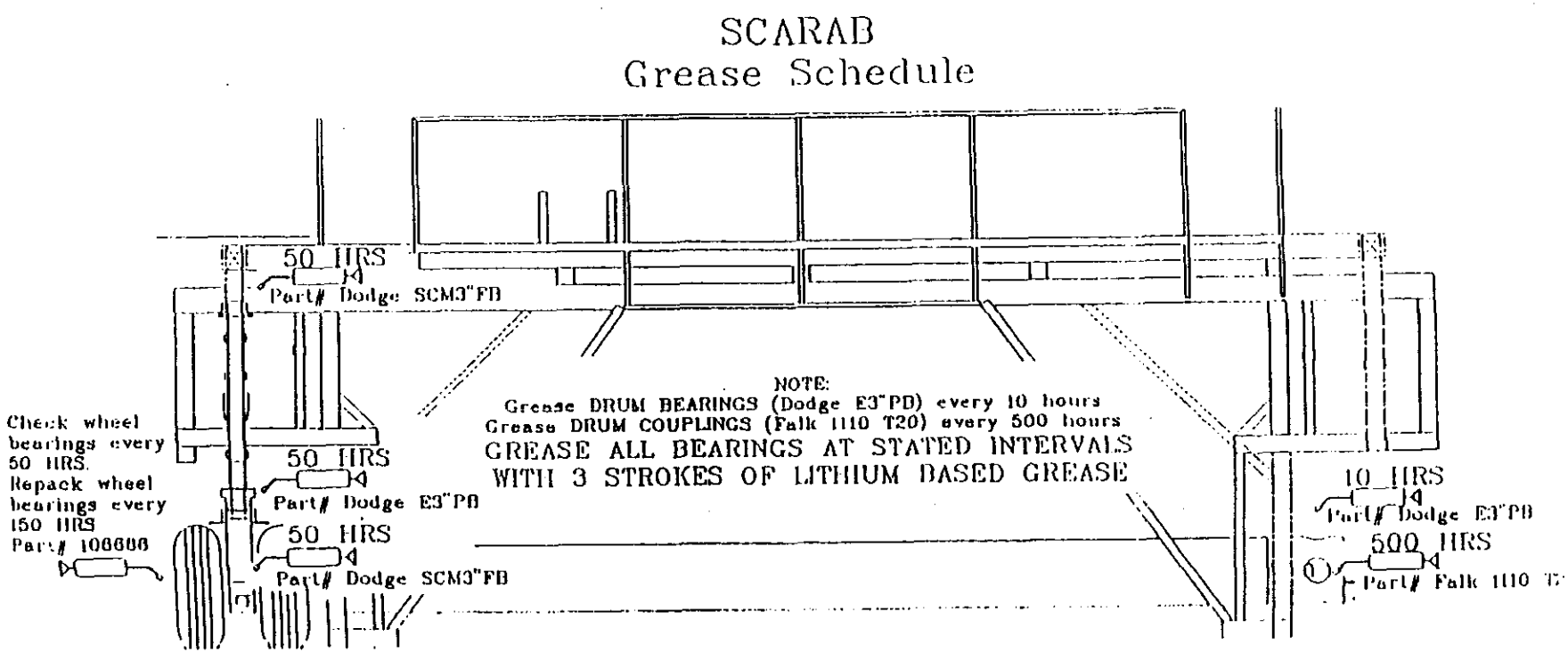

Engine Maintenance Schedule

Maintenance Schedule

Equipment No. _____
Mechanic _____
Time Spent _____
Parts Order No. _____

Engine Serial No. _____*
Hours, Calendar _____
Check Performed _____
Date _____

NTA855 Engines

Check each operation as performed.

Daily (Section 3)	Weekly (Section 4)	250 Hours or 6 Mos. (1) (Section 5)	1500 Hours or 1 Year (Section 6)	Annual (Section 7)	6000 Hours or 2 Years (Section 8)	Other (Section 9)
	Repeat Daily Check	Repeat (Daily/ Weekly)	Repeat Previous Intervals	Repeat Previous Intervals	Repeat Previous Intervals	
☐ Check operator's report ☐ Check engine: • Oil Level • Coolant level If make-up coolant is required, DCA4 concentration must be checked. ☐ Visually inspect engine for damage, leaks, loose or frayed belts and listen for unusual noises ☐ Visually inspect fan ☐ Drain water/ sediment from fuel tanks, fuel filters, and fuel/water separator ☐ Check/Clean air cleaner precleaner and dust pan	☐ Check air cleaner: • Check piping, hoses, and clamps • Check restriction indicator • Clean/ change air cleaner element ☐ Drain air tanks ☐ Check water inlet screens (marine only)	☐ Change engine oil ☐ Change filters • Oil full flow • Oil by-pass • Fuel filter • Water filter ☐ Clean/change • Crankcase breather • Air compressor air filter ☐ Check coolant additive (DCA4) concentration (all applications) (2)	☐ Adjust crossheads, valves and injectors	☐ Replace hoses as required ☐ Check cold start thermal aids ☐ Check batteries ☐ Steam clean engine ☐ Tighten mounting bolts ☐ Check crankshaft end clearance ☐ Check heat exchanger zinc plugs annually or as required (marine only) ☐ Check turbocharger mounting nuts	☐ Inspect the following assemblies: • Turbocharger • Vibration damper • Air compressor (Cummins/ Holset) • Fan hub • Idler pulley assembly • Water pump ☐ Clean and flush cooling system **6000 Hours or 3 Years** ☐ Clean and calibrate injectors and fuel pump	☐ - Alternator ☐ - Generator ☐ - Starter ☐ - Air compressor (Non-Cummins) ☐ - Electrical connections ☐ - Batteries ☐ - Freon compressor ☐ - Hydraulic governor - On these components follow the manufacturer's recommended maintenance procedure

(1) For standby generator sets, perform maintenance at 250 hours or 1 year.

(2) Check coolant additive concentration every 6 months unless the concentration is over 3.0 units. Then, check at every oil drain interval until concentration is below 3.0 units.

Note: Under circumstances where hours of operation are not accumulated at a fast rate, use calendar time. In other words, use hours, or calendar time, whichever comes first.

*Cummins Engine Company, Inc., recommends the use of dry type air cleaners.

INSPECTION PLAN AND LOG

MINE FILL A SOIL EXCAVATION

NAVAL SURFACE WARFARE CENTER, CRANE, INDIANA

CONTRACT NO./TITLE: N62467-93-D-1106/ ENVIRONMENTAL RESPONSE ACTION CONTRACT
DELIVERY ORDER NO: 0009
STATEMENT OF WORK: 007

Definable Feature of Work	Inspection Checklist(s)	Three Phases of Control (Enter Dates that Inspections are Performed)			Test or Inspection Results	Comments
		Preparatory	Initial	Follow-up		
Site Preparatory Work	SP-01					
Storm Water Retention	RB-01					
Decontamination Actions	DE-01					
Excavation	EX 02					
Backfilling	BF-01					
Waste Management	WM-01: DE-01					
Site Restoration	SR-01					

MORRISON KNUDSEN CORPORATION

ENGINEERING, CONSTRUCTION, ENVIRONMENTAL GROUP

FIELD INSPECTION CHECKLIST

Checklist Title	Checklist No.	Revision	Checklist
Site Preparatory Work	SP-01	June 1997	Page 1 of 2

References: Appendix E, Soil Excavation Plan

Item No.	Item Checked	Accept/ Reject	Remarks	Verified By /Date
	Preparatory Inspection			
1	Perform preparatory phase meeting prior to initiating work items for site clearing.			
2	Verify Exclusion Zone is clearly delineated.			
3	Verify excavation permits have been obtained.			
4	*Verify completion of any initial surveys.*			
5	Verify that a review of safety requirements is performed as part of the preparatory inspection. (Briefing by Site Safety & Health Officer).			
6	Ensure that a housekeeping and maintenance requirements are understood.			
7	Verify that storage tank for water has been installed and is dually contained Verify that storage tank for water has been installed and is dually contained.			
8	**Verify that Mine Fill Operations is informed of *excavation/restoration period and permission to* enter is granted.**			
	Initial Inspections			
1	Confirm work areas have been located within the limits of established stakes, lines or monuments.			
2	Verify that protection of items not to be removed or disturbed has been provided, as necessary.			
3	Verify that dust control measures are available and effective.			
4	Verify that storm water and erosion control measures have been implemented to control run-on, run-off.			
5	Verify that lined sumps are installed in the swales at the limits of the exclusion zone.			
6	*Verify that straw bales for surface water and erosion* control are in place.			

Specific Item Identification or Location, as applicable:

MORRISON KNUDSEN CORPORATION

ENGINEERING, CONSTRUCTION, ENVIRONMENTAL GROUP

FIELD INSPECTION CHECKLIST

Checklist Title	Checklist No.	Revision	Checkli
Site Preparatory Work	SP-01	June 1997	Page 2 of 2

References: Appendix E, Soil Excavation Plan

Item No.	Item Checked	Accept/ Reject	Remarks	Verified By /Date
	Follow-Up inspection			
1	Ensure removal of ground surface vegetation from the construction areas. Make sure yucca plants are not damaged and transplanted for further reasearch.			
2	Verify **U.S. Navy EPD** approval of removal from the construction area of stumps, roots, debris and other deleterious materials not suitable for subsequent grading or reuse and compaction.			
3	**Verify that photographs were taken of area to be excavated prior to any activities.**			
4	**Document run-on and run-off controls and any other delineation and equipment set up.**			
5	**Document vegetation removal.**			
6	Verify that storm water and erosion control measures are maintained to control run-on, run-off. Ensure that there are no breaches in these controls after all storm events.			

Additional Notes or comments: Use Additional Sheets as necessary

Specific Item Identification or Location, as applicable:

MK Project	Delivery Order Number	Checklist Title	
NSWC CRANE	0009-007	Site Preparatory Work SP-01	Page 2 of 2

MORRISON KNUDSEN CORPORATION

ENGINEERING, CONSTRUCTION, ENVIRONMENTAL GROUP

FIELD INSPECTION CHECKLIST

Checklist Title	Checklist No.	Revision	Checklist
Stormwater ~~Retention Basin~~ Run-on and Run-off Inspection	RB-01	June 1997	Page 1 of 2

References: Pilot Scale Operational Plan

Item No.	Item Checked	Accept/ Reject	Remarks	Verified By /Date
	Preparatory Inspection			
1	Review the requirement for daily visual inspection of the stormwater ~~retention basins~~ **run-on and run-off controls (swales, sumps, containment, etc.)** and documentation requirements.			
2	Verify that the most recent sample results are readily available in the event of an emergency discharge.			
3	Review forcasted weather and verify if a storm event is expected in the area.			
	Initial and Follow Up Inspections			
1	Perform an initial inspection of the ~~retention basin~~ **sump** liner **and any other secondary containment devices** for the following attributes: evidence of tears and holes; evidence of seepage; that the liner adequately covers the end sections and is secured by appropriate means; that expected quantities of generated liquids can be contained until collected for disposal			
2	Verify that there is a minimum of **2' freeboard at all times on retention basins at the Bioremediation Facility and a minimum of 1' freeboard on shallow sumps.**			
3	Take and record measurement of depth of liquid in each ~~basin~~. **sump and containment devices.**			
4	Verify that sample results are acceptabfeto the **U.S. Navy EPD** prior to discharge to sanitary sewer.			
5	Verify that records are established that specify retention ~~basin~~ **sump and containment devices** construction materials and methods, disposition of liquids, and any repairs and/or breaches of liner integrity.			
6	Verify that daily inspections of the retention ~~basins~~ **sumps, containment devices, swales with bales, etc.** are performed and documented.			
7	Verify that records of any breaches and/or repairs to ~~the~~ any liners are documented. **And, corrective action is recorded and notified to U.S. Navy EPD.**			

MORRISON KNUDSEN CORPORATION

ENGINEERING, CONSTRUCTION, ENVIRONMENTAL GROUP

FIELD INSPECTION CHECKLIST

Checklist Title	Checklist No.	Revision	Checkli
Stormwater ~~Retention Basin~~ Run-on and Run-off Inspection	RB-01	June 1997	Page 2 of

References: *Pilot Scale Operational Plan*

Item No.	Item Checked	Accept/ Reject	Remarks	Verified By /Date
8	Verify upon dismantlement of the retention ~~basin~~, *sump or containment devices* that underlying material is not contaminated and no indications of contamination are present (i.e. *saturated ground, discolored ground*). U.S. Navy EPD shall be notified. Potentially contaminated soil shall be sampled and *analyzed prior to removal and managed per the* ~~Sampling and Analysis Plan~~ approved QAPP.			

Additional Notes or comments: *Use Additional Sheets as necessary*

Specific Item Identification or Location, as applicable:

MK Project	Delivery Order Number	Checklist Title	
NSWC Crane	0009-007	Stormwater Retention Basin Inspection RB-01	Page 2 of 2

MORRISON KNUDSEN CORPORATION

ENGINEERING, CONSTRUCTION, ENVIRONMENTAL GROUP

FIELD INSPECTION CHECKLIST

Checklist Title	Checklist No.	Revision	Checklist
Decontamination	DE-01 Revision	June 97	Page 1 of 2

References: Pilot Scale Operational Plan

Item No.	Item Checked	Accept/ Reject	Remarks	Verified By /Date
	Preparatory Inspection			
1	Review the specification requirements regarding establishment of the decontamination facility.			
2	Review the requirement for daily visual inspection of the decontamination facility and documentation requirements.			
3	Review decontamination procedures for the external surfaces of construction and field equipment as contained in the Operational Plan.			
4	Verify that container for storage of decontamination water is established and of adequate size.			
5	Review Site Safety & Health Plan requirements for the Personnel Decontamination Facility. (Briefing by the Site Safety & Health Officer).			
	Initial Inspections			
1	Verify that the decontamination facility is constructed in an area approved by the Project Manager.			
2	Verify that decontamination facilities are delineated with highly visible barriers and appropriate signs as part of the contamination reduction zone.			
3	Perform an initial inspection of the decontamination facility liner for the following attributes: evidence of tears and holes; evidence of seepage; that the sheeting is adequately fastened to the side walls; that the liner adequately covers the end sections and is secured by sandbags or other appropriate means; that expected quantities of generated liquids can be contained until collected for disposal.			
4	Verify that records are established that specify decontamination facility construction materials and methods, disposition of liquids, and any repairs and/or breaches of liner integrity.			

Specific Item Identification or Location, as applicable:

MK Project	Delivery Order Number	Checklist Title	
NSWC Crane	0009-007	Decontamination DE-01	Page 1 of 2

MORRISON KNUDSEN CORPORATION

ENGINEERING, CONSTRUCTION, ENVIRONMENTAL GROUP

FIELD INSPECTION CHECKLIST

Checklist Title	Checklist No.	Revision	Checklist
Decontamination	DE-01	June 1997	Page 2 of 2

References: Pilot Scale Operational Plan

Item No.	Item Checked	Accept/ Reject	Remarks	Verified By /Date
5	Verify decontamination activities are performed in accordance with the Operational Plan.			
	Follow-Up Inspections			
1	Verify that daily inspections of the decontamination facility are performed and documented.			
2	Verify that records of any breaches and/or repairs to the liner are documented.			
3	Verify decontamination wastes are characterized and disposed of properly.			
4	Verify upon dismantlement of the decontamination facility, that underlying material is not contaminated and no indications of contamination are present (i.e. saturated ground, discolored ground). Potentially contaminated soil shall be sampled and analyzed prior to removal and managed per the Sampling and Analysis Plan.			

Additional Notes or comments: Use Additional Sheets as necessary

Specific Item Identification or Location, as applicable.

MK Project	Delivery Order Number	Checklist Title	
NSWC Crane	0009-007	Decontamination DE-01	Page 2 of 2

MORRISON KNUDSEN CORPORATION

ENGINEERING, CONSTRUCTION, ENVIRONMENTAL GROUP

FIELD INSPECTION CHECKLIST

Checklist Title	Checklist No.	Revision	Checklist
Excavation	EX-02	June 1997	Page 1 of 2

References: Appendix E - Soil Excavation Plan

Item No.	Item Checked	Accept/ Reject	Remarks	Verified By /Date
	Preparatory Inspection			
1	Are storm water/erosion controls adequate and in place?			
2	Review Excavation Plan to understand scope and extent of excavation.			
3	Verify that excavation permits have been obtained.			
4	Verify that excavation equipment is present and suitable for effort (i.e., backhoes, screeners, conveyors, etc.).			
5	Verify excavation equipment has been properly decontaminated.			
6	Verify that known underground utilities have been identified and marked. And equipment operators are aware of overhead utility locations.			
7	Verify that the Exclusion Zone has been clearly delineated in the field.			
8	Verify that a review of safety requirements is performed as a part of the preparatory phase inspection (Briefing by the Site Safety & Health Officer)			
	Initial Inspections			
1	Ensure that work is proceeding according to the plans discussed in the preparatory phase.			
2	Verify that screening and classification of excavated soils is performed according to the Technical Specification.			
3	Verify protection of items that are to remain.			
4	Verify that a dewatering sump is in place prior to further excavation beneath ground water table.			
5	Verify sumps within exclusion zones are adequately pumped down.			
	Follow-up Inspections			
1	Ensure that screened soil stockpiles are lined, bermed and covered properly.			
2	Verify that photographs were taken of all excavation activities and/or video.			

Specific Item Identification or Location, as applicable:

MORRISON KNUDSEN CORPORATION

ENGINEERING, CONSTRUCTION, ENVIRONMENTAL GROUP

FIELD INSPECTION CHECKLIST

Checklist Title	Checklist No.	Revision	Chec
Excavation	EX-02	June 1997	Page 2

References: Appendix E - Soil Excavation Plan

Item No.	Item Checked	Accept/ Reject	Remarks	Verified By /Date
3	Verify that excavated areas are covered during periods of predicted precipitation.			
4	Verify that any over-excavation has Navy EPD approval.			
5	Verify dust control measures are being performed ~~per Section 13.2.6 of Operation Plan.~~			
6	Ensure that rocks are segragated and washed on a lined area.			
7	Ensure sampling of rock rinse water has been performed.			
8	Ensure soil sampling has been accomplished in the excavation and stockpile.			
9	Ensure map of all sample locations completed daily.			
10	Ensure documentation of excavation dimensions (i.e., maps and charts) prior to backfilling.			
11	Verify that contaminated soil has been properly transported.			
12	Verify that erosion control measures are maintained daily.			
13	Verify that analytical results confirm that the excavation is clean.			

Specific Item Identification or Location, as applicable:

MORRISON KNUDSEN CORPORATION

ENGINEERING, CONSTRUCTION, ENVIRONMENTAL GROUP

FIELD INSPECTION CHECKLIST

Checklist Title	Checklist No.	Revision	Checklist
Backfill Placement	BF-01	June 97	Page 1 of 2

References: *Appendix E - Soil Excavation Plan*

Item No.	Item Checked	Accept/ Reject	Remarks	Verified By /Date
	Preparatory Inspection			
1	Perform a preparatory phase meeting prior to initiating backfill operations to ensure that backfill placement requirements are understood by all parties.			
2	Verify that compaction densities are identified and understood.			
3	Verify that backfill equipment is present and suitable for the effort, i.e. vibratory compaction equipment, smooth drum rollers, etc.			
4	Verify excavation and backfill equipment has been properly decontaminated.			
5	Verify that required samples from excavation have been analyzed and the results are acceptable prior to backfill.			
6	Verify documentation of excavation locations is complete prior to backfilling.			
	Initial Inspections			
1	Verify that borrow source, excavation and backfilling is performed in accordance with the Operation Plan and within established bounds.			
2	Verify that sub-standard materials (tree roots, etc.) are removed.			
3	Verify that subsoil irregularities such as soft spots are removed.			
4	Confirm that drainage, de-watering, etc., conform to Operation Plan.			
5	Verify the performance of ASTM D698 Proctor Tests for each soil type. Ensure receipt of test report by MK.			

Specific Item Identification or Location, as applicable:

MK Project	Delivery Order Number	Checklist Title	
NSWC Crane	0009-007	Backfill Placement BF-01	Page 1 of 2

MORRISON KNUDSEN CORPORATION
ENGINEERING, CONSTRUCTION, ENVIRONMENTAL GROUP

FIELD INSPECTION CHECKLIST

Checklist Title	Checklist No.	Revision	Chec.
Backfill Placement	BF-01	June 97	Page 2 ι.

References: Appendix E - Soil Excavation Plan

Item No.	Item Checked	Accept/ Reject	Remarks	Verified By /Date
	Follow-Up Inspections			
1	Verify that backfill materials are not contaminated.			
2	Verify that backfill materials are compacted in lift thicknesses that do not exceed 12 inches. Compaction testing of lifts shall also be confirmed.			
3	Verfify performance of field density tests and documentation of results.			
4	Ensure that final grade of the backfill is to previous subgrade material.			
5	Verify that photographs were taken of all backfilling activities.			
6	Ensure documentation of backfilling locations and soil volumes.			

Specific Item Identification or Location, as applicable:

MK Project	Delivery Order Number	Checklist Title	
NSWC Crane	0009-007	Backfill Placement BF-01	Page 2 ι

MORRISON KNUDSEN CORPORATION

ENGINEERING, CONSTRUCTION, ENVIRONMENTAL GROUP

FIELD INSPECTION CHECKLIST

ıecklist Title	Checklist No.	Revision	Checklist
Waste Storage Inspection	WM-01	June 1997	Page 1 of 1

References: *Pilot Scale Operational Plan*

Item No.	Item Checked	Accept/ Reject	Remarks	Verified By /Date
	Preparatory Inspection			
1	Has all applicable personnel been briefed on Waste Management activities and requirements?			
2	Have proper storage containers been received on-site in preparation for waste collection?			
	Initial Inspections			
1	Have all containers been properly labeled?			
2	Do all containers have lids or covers and are properly covered.			
3	Have stockpile areas been properly prepared per the approved Operational Plan, i.e., lined and bermed areas?			
4	**Verify that U.S. Navy EPD waste mangement requirements are being met.**			
	Follow-Up Inspections			
1	Are all containers kept proerly covered or closed and has a legible label been maintained?			
2	Are any containers buldging or leaking?			
3	Have containers/stockpiles been placed on impervious pad or lined area?			
4	Are effective run-on/run-off controls in place?			
5	Is any hazardous waste nearing the 90-day storage period?			
6	Verify that U.S. Navy EPD waste management requirements are being met.			

Additional Notes or comments: Use Additional Sheets as necessary

MK Project	*Delivery Order Number*	*Checklist Title*	
;WC Crane	0009-007	Waste Storage Area Inspection WM-01	Page 1 of 1

MORRISON KNUDSEN CORPORATION

ENGINEERING, CONSTRUCTION, ENVIRONMENTAL GROUP

FIELD INSPECTION CHECKLIST

klist Title	Checklist No.	Revision	Checklist
Site Restoration	SR-01	June 1997	Page 1 of 1

References: Appendix E, Section 8 - Backfilling and Site Restoration

Item No.	Item Checked	Accept/ Reject	Remarks	•Verified By /Date
	Preparatory Inspection			
1	Verify that backfilling has been performed per the Excavation Operational Plan.			
	Initial Inspections			
1	Verify inventory of existing conditions and surface features that will affect site restoration.			
2	Verify proper removal of barracades, decon pads, stockpile and storage areas, and equipment.			
	Follow-Up Inspections			
1	Verify that the site is restored in accordance to the Operation Plan (3" topsoil, topsoil has 5% organic matter, etc.).			
2	Verify continued maintenance of grass and plant life. Replaced or replenish, if required and watering has been performed.			
3	Verify implementation of erosion control where necessary.			
4	Perform final walk-through with the Navy Resident Officer in Charge of Construction to confirm final site restoration.			
5	Compile a punchlist of any items identified as deficient or incomplete, and submit to the subcontractor for resolution and photo document affected areas.			
6	Verify that photographs were taken of all restoration activities.			
7	Obtain final written acceptance from Navy RO/CC on site.			

Additional Notes or comments: Use Additional Sheets as necessary

Specific Item Identification or Location, as applicable:

'roject	Delivery Order Number	Checklist Title	
SWC Crane	0009-007	Site Restoration SR-01	Page 1 of 1

NSWC CRANE
PILOT SCALE OPERATIONAL ACTIVITIES

QUALITY CONTROL PLAN

CONTRACT #N62467-93-D-1106

REVISION #1
June 6, 1997

Prepared For:

SOUTHERN DIVISION
NAVAL FACILITIES ENGINEERING COMMAND
P.O. Box 190010
2155 Eagle Drive
North Charleston, South Carolina 29419-9010

Prepared By:

MORRISON KNUDSEN CORPORATION
2420 Mall Drive
Corporate Square 1 - Suite 211
North Charleston, South Carolina 29406

TABLE OF CONTENTS

SECTION		PAGE
1.	INTRODUCTION	1
2.	QUALITY CONTROL PLAN	1
2.1	Definable Features of Work	1
2.2	Three Phases of Control	3
2.3	Quality Assurance Procedures	3
2.4	Data Quality Objectives	3
2.5	Preconstruction/Quality Control Meetings	3
3.	QUALITY CONTROL PERSONNEL	
3.1	Program Quality Control Manager (PQCM)	
3.2	Site Quality Control Supervisor (SQCS)	
3.3	Laboratory Quality Control Personnel	
4.	SUBMITTALS	
4.1	MK PMO to Southern Division Submittals	
4.2	Subcontractor Submittals	
4.3	Site Submittals	
5.	INSPECTION SYSTEM	
5.1	Three Phases of Control	
5.1.1	Preparatory Inspection	
5.1.2	Initial Inspection	
5.1.3	Follow-Up Inspection and Surveillance	
5.1.4	Final Inspections and Beneficial Occupancy Date	
5.2	Documentation	
5.3	Testing Plan and Log	
5.4	Rework Items List	
5.5	As-Built Records	
5.6	Report Forms	
6.	TESTING PLAN AND LOG	
7.	REWORK PROCEDURES	
8.	QUALITY RECORDS	

TABLE OF CONTENTS

SECTION		PAGE
9.	LABORATORY QUALIFICATION REQUIREMENTS	
	9.1 Analytical Chemistry Laboratories	
	9.2 Geotechnical and Material Testing Laboratories	
	9.2.1 Accredited Laboratories	
	9.2.2 *Non-accredited Laboratories*	
	9.3 Test Results	
10.	INSPECTION/PROGRESS SCHEDULE	
11.	REFERENCED PROCEDURES	
12.	TABLES	

FIGURES

FIGURE		PAGE
3-1	MK QUALITY INTERFACES RAC DISTRICT II	
4-1	GENERAL SUBMITTALS FLOW	
7-1	BASIC DEVIATION RESOLUTION	

TABLES

TABLE		PAGE
1-1	Quality Program Elements	
2-1	Typical Quality Records[11]	

1. INTRODUCTION

The Quality Control requirements for activities associated with execution of Delivery Orders for Southern Division, Naval Facilities Engineering Command (SOUTHDIV) District II Response Action Contract (RAC) are presented in two primary areas:

- Physical construction/remediation action activities covered under this Delivery Order Execution Quality Control Plan (QCP) as supplemented by Delivery Order specific requirements in Section 5 of each Work Plan; and

- Chemical data quality objectives and specific sampling and analysis quality requirements covered in Quality Assurance Project Plans (QAPjP) developed for each specific Delivery Order and contained as Appendix B of the Work Plan.

The quality requirements for these activities are presented in separate plans because of the different types of controls applied to each. Examples of the types of physical and chemical quality requirements contained in each plan are presented in Table 1-1.

2. QUALITY CONTROL PLAN

The QCP presented herein is structured to implement the basic controls necessary to achieve and maintain a consistently high level of quality in environmental remediation activities performed for Southern Division. This consistency will be accomplished through the application of the *Three Phases of Control* quality control system and documentation of testing and inspection activities for each Definable Feature of Work. This QCP provides the framework of quality control activities that are implemented for all Delivery Orders and is supplemented by information that is unique for each individual Delivery Order. This information is found in Section 5 of each Delivery Order Work Plan.

A Definable Feature of Work (DFOW) is defined as "a task which is separate and distinct from other tasks and requires separate control requirements." Using a Delivery Order involving UST Removal actions as an example, typical Definable Features of Work may include Site Preparatory Work; Above Tank Soil Excavation, Storage, and Disposition; Tank Residual Product Removal; Tank and Ancillary Equipment Removal, Storage, and Disposal; Soil Excavation, Storage, and Disposition; Field Sampling; Decontamination Actions; Run on/Run off Control; Backfill Placement; Topsoil Placement; and Site

Table 1-1: Quality Program Elements

Program Activity	Quality Document	Elements Addressed
Physical Construction *and* Remediation Activities	Quality Control Plan (QCP)	• Definable Features of Work • Three Phases of Control • Communication (QC Meetings) • QC Personnel • Submittals • Inspection System • Testing Plan • Rework Procedures • Required QC Documentation • Laboratory Qualification Requirements • Inspection/Progress Schedule • Supporting Procedures

Table 1-1: Quality Program Elements (continued)

Program Activity	Quality Document	Elements Addressed
Chemical Data Quality Objectives *and* Sampling and Analysis Quality Requirements	Quality Assurance Project Plan (QAPjP)	- Project objective - Target Parameters - Data Quality Objectives - Project Organization and Responsibilities - QA Objectives for Precision, Accuracy, Completeness, Representativeness, and Comparability - Sampling Procedures - Custody Procedures - Calibration Procedures - Analytical Procedures - Internal QC Checks - Data Verification & Validation - Performance and Systems Audits - Preventative Maintenance - Assessment of Data Precision, Accuracy, and Completeness - Corrective Action - QA Reports to Management

Restoration. Other types of remedial actions will have different Definable Features of Work established. The Definable Features of Work established for each Delivery Order are identified in Section 4 of the Work Plan.

2.1 Definable Features of Work

The Site Quality Control Supervisor (SQCS) will perform the Three Phases of Control inspections for each DFOW. A Testing Plan and Log, included in the Work Plan, is structured to ensure that Preparatory, Initial and Follow-up inspections are completed for each DFOW.

2.2 Three Phases of Control

This QCP integrates the Navy's Quality Control system of the *Three Phases of Control*. These phases, Preparatory, Initial, and Follow-up, represent a logical and systematic approach to ensuring the quality of the remediation work processes. Integration of the Three Phases of Control is accomplished by the performance of Preparatory, Initial, and Follow-up inspections at representative points in the work processes for each Definable Feature of Work.

At each phase, Quality Control verification activities may be supplemented by the performance of detailed inspections of a particular activity. In these cases, Field Inspection Checklists have been generated to ensure a thorough verification of the work process. The use of Field Inspection Checklists is detailed in the Testing Plan and Log. Copies of the specified Field Inspection Checklists and the Testing Plan and Log are included in the Work Plan.

2.3 Quality Assurance Procedures

Part III of the QAPjP is structured to establish the precision, accuracy, representativeness, completeness and comparability requirements of environmental monitoring and measurement data associated with sampling and analysis quality requirements.

2.4 Data Quality Objectives

Data Quality Objectives (DQO's) are qualitative and quantitative objectives for analytical data established to ensure that data of known and acceptable quality is provided for the intended data users. Because of the critical nature and importance of analytical chemistry to the District II RAC, a QAPjP for each project is generated to

work in conjunction with the Delivery Order Work Plan. The QAPjP establishes the DQO's for the project, detailed quality assurance/quality control requirements, and specific field sampling information.

The parameters to be analyzed and associated detection limits are outlined in the QAPjP. The QAPjP also provides the details for decontamination of sampling equipment, sample packaging and preservation, transportation, sample numbering, chain of custody, and documentation requirements. Samples will be collected in the field and submitted to laboratories to perform the required analyses. Duplicate samples will be used to develop estimates of the accuracy and precision of the analytical data. Field surveillance of sampling, field measurements, and chain of custody procedures will be used to verify that proper techniques are being implemented.

To ensure that the project's DQO's have been achieved, all analytical laboratory data undergoes a data verification process. Approximately 10% of selected analytical data is subjected to the data validation process.

2.5 Preconstruction/Quality Control Meetings

To ensure that all parties performing work understand fully the quality requirements established for the Delivery Order, a Coordination and Mutual Understanding Meeting will be held prior to the start of construction/remediation. Attendees at the meeting include the following as applicable: Contracting Officer (CO) or designee, the Navy Resident Officer In-Charge of Construction /Navy Technical Representative (ROICC/NTR), **the Assistant or Associate Technical Representative (ANTR) who are the Environmental Protection Office representatives,** the MK Project Manager, the MK Site Superintendent, the MK Site Environmental Specialist, the MK SQCS, and Subcontractor Management personnel and Superintendent(s). Other "Navy/Base" representatives who wish to attend will be afforded the opportunity to do so. Minutes of the meeting shall be prepared by the MK SQCS and distributed to all attendees for comment prior to finalization. A copy of the meeting minutes is then provided to the Navy and MK Charleston Program Management Office (PMO).

After construction/remediation action activities commence, the MK SQCS will conduct *QC Meetings* at least once every week or more frequently, if appropriate. QC Meetings will be held with the "Navy/Base" representatives, MK Project Manager and Site Superintendent, and Subcontractor Superintendent(s) responsible for upcoming work. This QC meeting may be held concurrently with the weekly construction meeting. The

purpose of the QC Meeting is to review the minutes of the previous meeting, the schedule, the status of submittals, the work to be accomplished in the next two weeks and to plan any testing and documentation required, resolve any QC and production problems, and address any items that may require revising the QCP. QC Meetings will be documented, with a copy of the minutes of the meeting provided to the ROICC/NTR /designees **and the ANTR,** within two working days after the meeting.

3.0 QUALITY CONTROL PERSONNEL

This section of the QCP sets forth the duties, responsibilities and authorities of Quality Control Personnel executing tests and inspections in support of Delivery Order activities. The Quality Control organization depicted in Figure 3-1 will consist of the following positions for each Delivery Order unless specifically changed in the Work Plan:

3.1 Program Quality Control Manager (PQCM)

The Program Quality Control Manager (PQCM) is responsible for ensuring the implementation of the MK District II RAC Quality Program and the Three Phases of Control of the quality control system; the PQCM is also responsible for ensuring observation by MK inspection personnel of designated Inspection/Test points, for performance of compliance audits as appropriate to the scope of a project, for assignment of Quality Control personnel, for assistance in resolving quality related matters, and for approval of submittals to Southern Division in N. Charleston, SC.

3.2 Site Quality Control Supervisor (SQCS)

The name and qualification of the SQCS for each Delivery Order will be submitted under separate cover to the Contracting Officer. The SQCS is responsible for overall implementation of this QCP at the project site and has the authority to act independently in all Quality Control matters. The SQCS will report to the MK PQCM based in the MK Program Management Office (PMO).

The SQCS reports directly to the PQCM, interfacing on a day-to-day basis with the site Project Manager. The SQCS has the authority to halt work if it is found to be nonconforming and if further processing may result in an inability to resolve the identified condition. The SQCS is responsible for the following activities:

- Implementing the Delivery Order QCP;
- Performing required tests and inspections, as specifically assigned in the QCP according to the Three Phases of Control;
- Supervising site of the Quality staff, as applicable;
- Assisting the PQCM in the submittal process;
- Reporting of inspection/test results in a regular and timely manner;
- Certifying completed work, invoices, and reports as may be designated in writing;
- Stopping of work that does not comply with requirements established contractually;
- Managing the performance of all on-site and off-site inspections and testing;
- Evaluating the results of the inspections and testing;
- Maintaining the Testing Plan and Log status;
- Performing Preparatory, Initial, and Follow-Up Inspections as required to support the construction schedule provided in the Work Plan;
- Documenting results of inspection and testing activities on the Contractor Quality Control Report;
- Maintaining the status of the Rework Items List per Section 5 of this QCP; and
- Ensuring that sample custody requirements are maintained.

3.3 Laboratory Quality Control Personnel

Laboratory Quality Control personnel will perform the laboratory tests as specified to generate the QC analytical data. Laboratory QC personnel will be qualified by training and experience in accordance with the selected laboratory's Quality Assurance/Quality Control Manuals.

FIGURE 3-1: MK QUALITY INTERFACES
RAC DISTRICT II

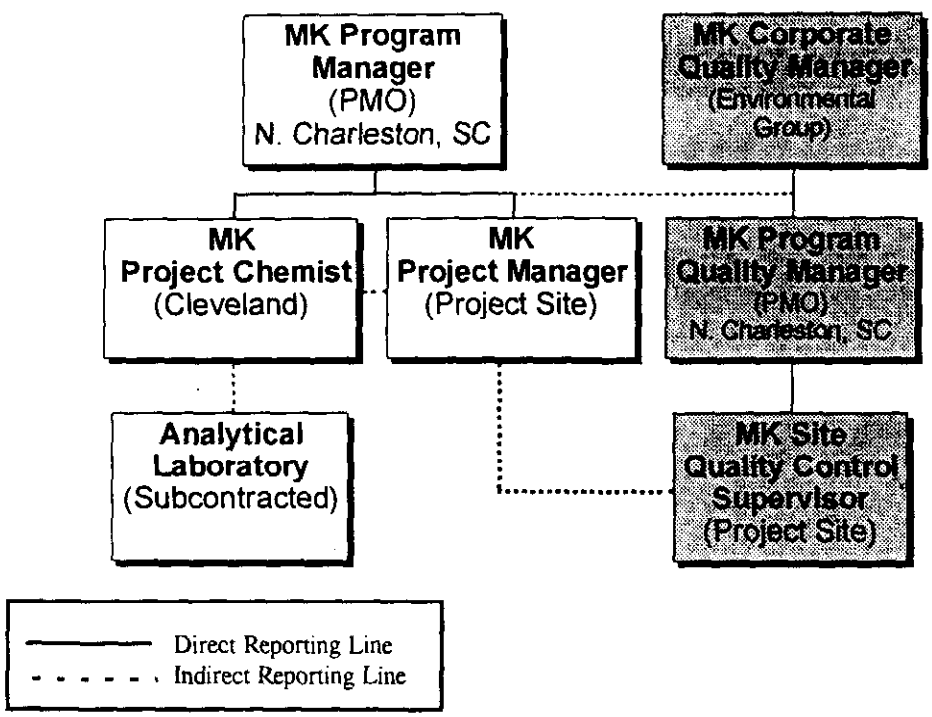

4.0 SUBMITTALS

Submittals relating to this Delivery Order are processed in accordance with this section of the QCP. There are three primary areas of submittal activity as depicted in Figure 4-1:

- Work Plan and supporting documents processed at the Program Management Office (PMO) in N. Charleston;
- Subcontractor submittal review and approval;
- Site Submittals to the ROICC/NTR **and the ANTR**.

FIGURE 4-1: GENERAL SUBMITTALS FLOW

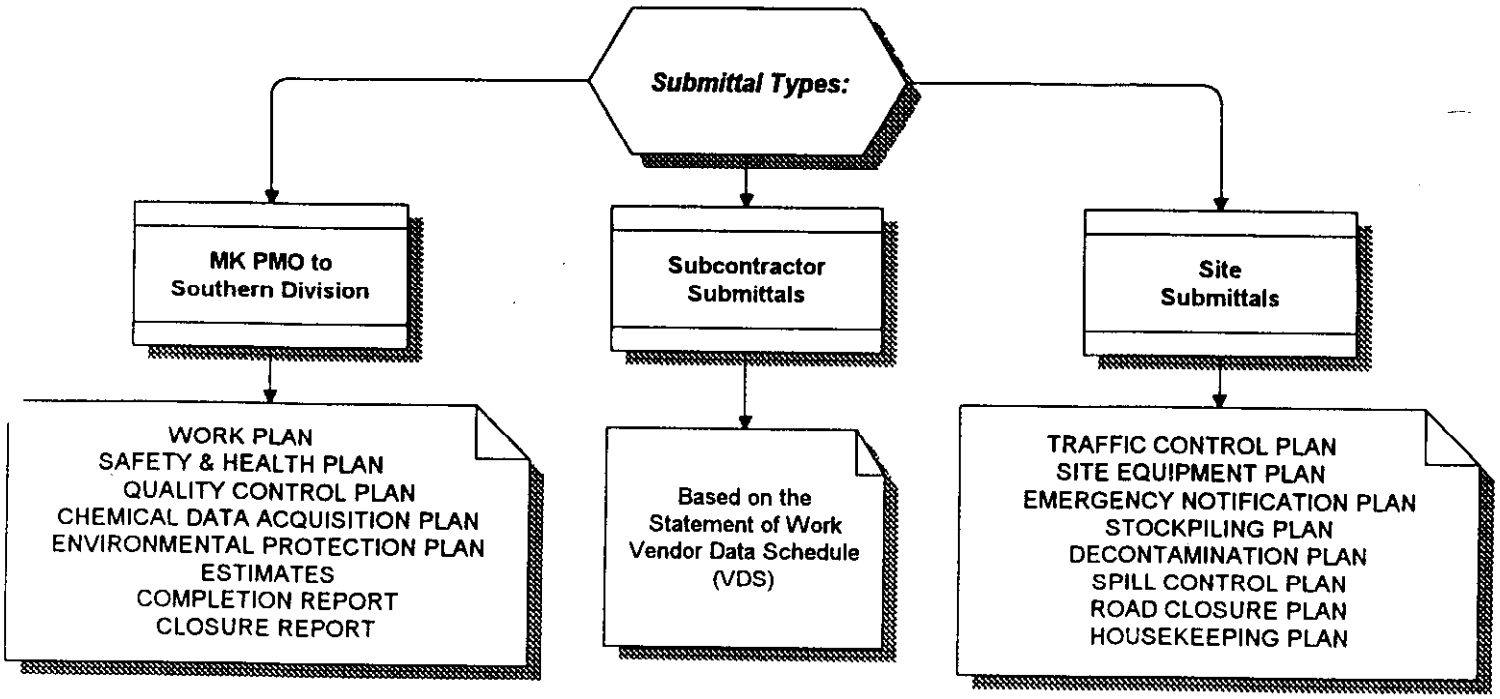

4.1 MK PMO to Southern Division Submittals

The MK PQCM based in N. Charleston, SC is responsible for review and approval of Delivery Order planning document submittals, such as Work Plans, Safety & Health Plans, Quality Control Plans, other work planning documents, and Completion or Closure Reports. The submittal status for these documents will be maintained at the Program Management Office in N. Charleston.

4.2 Subcontractor Submittals

The Site Quality Control Supervisor will develop and maintain submittal registers for each subcontractor selected to support the remediation work at the project site. The submittal register will list the contractually required submittals based on the Vendor Data Schedule developed in the subcontract package, and indicate submittal approval authorities. These authorities will always include the MK Project Engineer and the Site Quality Control Supervisor. Other submittals may require review by the ROICC/NTR, **and the ANTR as directed** . Once the submittal register is developed, the Site QC Supervisor submits it to the ROICC/NTR, **and the ANTR as directed,** who will indicate which submittals require Navy review and approval. As the subcontractor submits the required items, the SQCS will ensure that required reviews are performed and the submittal status is maintained on the Subcontractor Submittal Register.

4.3 Site Submittals

Occasions may arise where the project site is required to develop and submit brief plans to the ROICC/NTR, such as Traffic Control Plans, Site Equipment Plans, Stockpiling Plans, and Road Closure Plans. Because these documents are intended to coordinate site work with ongoing base actions, they do not require PMO review and approval. The status of these plans will be maintained by the SQCS utilizing a "Site Submittal Register."

5.0 INSPECTION SYSTEM

5.1 Three Phases of Control

The Three Phases of Control is a term applied to the Navy's Quality Control system, and it consists of inspections performed at three distinct phases in the work process. These inspections include the Preparatory Inspection, Initial Inspection, and Follow-up Inspection. The system is designed to emphasize planning and preparation for the work to be performed, and follows a philosophy of problem prevention. As described in this section, the Preparatory Inspection involves those parties charged with performing the work and is meant to be sure the work is done right the first time. The Initial Inspection is performed upon completion of a representative sample of the work, and provides a determination as to whether work is proceeding correctly. The Follow-up Inspection phase involves routine checks on the work activity to ensure that the work continues to be performed acceptably.

The SQCS will implement the Three Phases of Control system for each Definable Feature of Work listed in the Work Plan. Specific types and frequencies of tests are detailed in the Testing Plan and Log. Inspections will be performed utilizing inspection checklists as specified in the Testing Plan and Log and included in the Work Plan.

5.1.1 Preparatory Inspection

The ROICC/NTR or his/her designee **and the ANTR** will be notified at least two working days in advance of each preparatory phase inspection. The preparatory phase inspection process will be initiated by the Site Superintendent responsible for the Definable Feature of Work. The results of the preparatory phase actions will be documented in the daily Contractor Quality Control Report. Prior to beginning work on each Definable Feature of Work, the following will be performed:

- Review each paragraph of the applicable specification sections;
- Review the contract drawings;
- Verify that appropriate shop drawings and submittals for materials and equipment have been submitted and approved. Verify receipt of approved factory test results, when required;

- Review the testing plan and ensure that provisions have been made to provide the required QC testing;

- Verify that the appropriate disposal analysis requirements have been submitted to determine waste characterization analysis;

- Examine the work area, including the decontamination facility, to ensure that the required preliminary work has been completed and safety precautions have been taken;

- Examine the required materials and equipment and sample work to ensure that materials and equipment are on hand and conform to the approved shop drawings and submitted data;

- Review the Site Safety and Health Plan and appropriate activity hazard analysis to ensure that applicable safety requirements are met and that required Material Safety Data Sheets (MSDS) are submitted. (Normally, this review will be accomplished by the Site Safety & Health Officer. It is a QC responsibility to ensure that the review is accomplished.)

- Discuss construction methods.

- Ensure that personnel of the required skill level are available and ready to complete the task.

- Review the test or sampling procedure(s) to verify that proper and adequate equipment and resources are on hand to perform the testing or sampling.

5.1.2 Initial Inspection

Following the completion of a representative sample of the given feature of work, the SQCS will verify that the work meets the applicable quality requirements. The following items will be verified during Initial Inspection:

- The workmanship meets the established quality requirements;
- Configuration and construction methods, equipment, and tools appear to be effective;
- Calibration of measurement and test equipment is as specified;
- Materials and articles used are as specified;
- Inspection/testing methods are adequate;
- Applicable drawings are adequate; and
- Safety and environmental precautions are adequate and comply with the Site Safety & Health Plan requirements.

5.1.3 Follow-Up Inspection and Surveillance

The following will be performed for ongoing work until the completion of each Definable Feature of Work. Follow-up inspections shall be documented in the daily Contractor Quality Control Report:

- *Work agrees with contract requirements;*
- The quality of required workmanship is maintained;
- Testing is performed;
- Rework items are being corrected;
- Decontamination facility is in sound working order; ~~and~~
- The as-built drawings are being maintained; **and**
- Work is completed in a safe manner, with no violations of the Site Safety & Health Plan requirements.

5.1.4 Final Inspections and Beneficial Occupancy Date

When a definable feature of work is nearing completion, the Project Manager/ Superintendent will request that the Site QC Supervisor perform a punchlisting of open/deficient items requiring completion/resolution. The Project Manager/ Superintendent will identify those items known to remain open/deficient at the time of the request. The Site QC Supervisor will perform an inspection of the definable feature

of work, and punchlist items identified as open/deficient. The punchlist will then be provided to the Project Manager/Superintendent. The Project Manager/Superintendent will provide resolution of the punchlisted items. Following correction of the punchlisted items, the Project Manager/Superintendent will request inspection and acceptance of the noted items by the Site QC Supervisor. The Site QC Supervisor will maintain a status of accepted punchlist items. Clearance of all punchlist items, including those subsequently identified after the initial punchlisting inspection, constitutes final inspection. Typically, the ROICC/NTR **and the ANTR are** ~~is~~ invited to perform a final inspection. Where possible, documented acceptance of the work should be obtained from the ROICC/NTR, **and the ANTR**, who will normally establish a Beneficial Occupancy Date (BOD) for the work site. This is not typically performed on each DFOW - only on job completion. Copies of Navy acceptance are to be retained in the Project Files.

5.2 Documentation

The SQCS will perform follow-up inspections based on the Testing Plan and Log contained in the Delivery Order Work Plan. The SQCS will document the results of each day's inspection on the Contractor Quality Control Report. Completed Contractor Quality Control Reports shall be submitted to the ROICC/NTR **and the ANTR** on a daily basis.

Completion of Contractor Quality Control Reports is required for each day that work is performed and on the last day of seven consecutive calendar days of no work. Each calendar day will be recorded throughout the life of the project. The reporting of work shall be identified by terminology consistent with the construction schedule.

Contractor Quality Control Reports are to be prepared, signed, and dated by the MK SQCS and shall contain the following information:

- Identification of the Control Phase and the Definable Feature of Work.

- Results of the preparatory phase meetings held, including the location of the

Definable Feature of Work and a list of personnel present at the meeting; verification in the report that for this Definable Feature of Work, the drawings and specifications have been reviewed, and work methods and schedule have been discussed.

- Results of the initial phase meetings, including the location of the Definable Feature of Work and a list of personnel present at the meeting; verification in the report that for this Definable Feature of Work the preliminary work was done correctly, samples have been prepared and approved, the workmanship was satisfactory, test results were acceptable, work was in compliance with the contract, the required testing has been performed, and a list of who performed the tests is included.

- Results of the follow-up phase inspections, including the location of the Definable Feature of Work; verification in the report for this Definable Feature of Work that the work complies with the contract as approved in the initial phase, required testing has been performed, and a list of who performed the tests is included.

- Results, including actions taken, of the Three Phases of Control for off-site work.

- A list of rework items identified, but not corrected by close of business.

- A revised rework items list along with the corrective action taken, as rework items are corrected.

- A "Remarks" section containing:

- Pertinent information which includes directions received, QC problem areas, deviations from the QCP, construction deficiencies encountered, QC meetings held, acknowledgment that as-built drawings have been updated, corrective direction given by the PQCM, and corrective action taken by the Contractor.

- Contractor Quality Control Report certification.

- Certification statement that the report is complete and correct; equipment and material used and the work performed during the reporting period is in compliance with the contract, drawings, and specifications, except as otherwise noted.

5.3 Testing Plan and Log

As tests are performed, the SQCS shall record on the Testing Plan and Log the date the test was conducted and the date the test results were forwarded to the ROICC/NTR **and the ANTR**. The SQCS will attach a copy of the updated Testing Plan and Log to the last daily Contractor Quality Control Report of each week. This log may be maintained as a computer file for ease of update, which will allow its use as a final testing summary report.

5.4 Rework Items List

The MK SQCS shall maintain a list of work that does not comply with the contract, identifying what items need to be reworked, the date the item was originally discovered, and the date the item was corrected. There is no requirement to report a rework item that is corrected the same day it is discovered. The SQCS will attach a copy of the MK rework items list to the last daily Contractor Quality Control Report of each week. The SQCS shall be responsible for including on this list items needing rework, as well as those identified by the ROICC/NTR **and the ANTR**. This log may be maintained as a computer file for ease of update, which will allow its use as a final testing summary report.

5.5 As-Built Records

The SQCS is required to review the as-built records required by contract to ensure that as-built records are kept current on a daily basis and marked to show deviations which have been made from the contract drawings. The SQCS shall initial each deviation or revision. Upon completion of work, the SQCS shall submit a certificate attesting to the accuracy of the as-built records prior to submission to the ROICC/NTR **and the ANTR**.

5.6 Report Forms

Inspection and test results will be summarized daily on the Contractor Quality Control Report and supported by completed inspection/test checklists for the activity. Completed checklists may be included in the Closure Report at project completion, or retained in project files. Contractor Quality Control Reports shall be submitted daily to the ROICC/NTR **and the ANTR**.

6.0 TESTING PLAN AND LOG

A Testing Plan and Log is prepared for each Delivery Order and included in the Work Plan. The Testing Plan and Log references specific quality control Field Inspection Checklists for each Definable Feature of Work. The checklists identify the project component, the specific inspection or test to be performed and the frequency of such testing or inspection; they also list the standard which governs the methodology to be employed. Qualitative and quantitative acceptance criteria is provided, either through

an actual listing of the criteria or by reference to a supporting checklist, work plan element, or a governing regulation or standard.

The Testing Plan and Log is intended to serve as a living document to record, in the field, the status of testing and inspection performed in support of the Delivery Order work.

The Testing Plan and Log reflects the application of the Three Phases of Control to the Definable Features of Work for each area. Where multiple areas will be worked at one time, the preparatory, initial and follow-up inspections may be combined. It is not necessary to generate a separate checklist for each area; however, it is necessary to perform the Three Phases of Control for each activity in each area. As inspections are completed, the SQCS will record the date that the inspections occurred in the appropriate sections of the Testing Plan and Log. Results of the inspections will also be maintained.

7.0 REWORK PROCEDURES

The SQCS is responsible for ensuring that items that deviate from specified quality requirements are reported, tracked, and resolved. *MK Quality Execution Procedure (QEP) 13.1* establishes the requirements and responsibilities associated with the identification, reporting, and correction of deviating items. Deviations are usually identified by inspectors during routine inspections or tests; however, deviations may be identified at any time by anyone involved with the work and reported to the SQCS.

Nonconformances are typically of such a nature that resolution of the condition requires the coordination of multiple organizations or a specialized engineering or scientific evaluation. Nonconformance Reports are considered more severe than items identified on the Rework Items List. Because of this, the PQCM tracks and coordinates the resolution of Nonconformance Reports generated for all Delivery Orders. Nonconformance Reports will be dispositioned by a qualified engineer or scientist using the following categories of disposition:

- **Rework**-The reported deficient condition is to be re-worked as specified in the disposition.

- **Repair**-The reported deficient condition is to be "repaired" using a specific procedure provided in the disposition. The repair may require a custom approach to be utilized only for the reported condition. **Note: Under this disposition, the condition must be reflected accurately on as-built drawings.**

There are two main categories of deviations.

These include:

- **Rework Items**-Deviating conditions that may be resolved by simply reworking the item or condition as originally specified. These conditions may be corrected immediately or may require tracking on the Rework Items List, if not corrected by the end of a shift.

- **Nonconformances**-A deviation of such a nature that resolution of the condition requires the coordination of multiple organizations or a formal engineering or scientific evaluation. Generally, any deviation that cannot be resolved by the performance of rework is considered a nonconformance.

As depicted in Figure 7-1, the key to resolving deviating items and conditions is to determine whether the condition can be corrected by reworking the item per original requirements. If the condition can be corrected by the end of the work shift, then no further tracking is required. If the condition is not resolved, the SQCS will note the Deviating condition on the Rework Items List for further tracking and resolution.

Deviating conditions which cannot be corrected by simple rework may be documented on a "Nonconformance Report".

- **Use-as-Is**-The engineering evaluation indicates that it is acceptable to use the subject item or condition "as-is," and requires no further correction. A detailed engineering justification will be provided in the disposition for using the item "as-is." **Note: Under this disposition, the condition must be reflected accurately on as-built drawings.**

- **Reject**-The reported condition has been evaluated to be rejectable and the item should be discarded. This disposition is typically utilized for material problems and not programmatic errors.

8.0 QUALITY RECORDS

Required Quality Control documentation that is to be completed to support a Delivery Order will be specified in the Delivery Order Work Plan.

Quality Records are generally defined as records that attest to or provide details of the quality of work performed on a Delivery Order. These records are technical in nature and serve to provide a record of environmental remediation activities. Quality records normally do not include administrative or cost documents.

Required records will be defined in Delivery Order Work Plans. Typical Quality Records for a Delivery Order are presented in Table 2-1.

FIGURE 7-1:
BASIC DEVIATION RESOLUTION

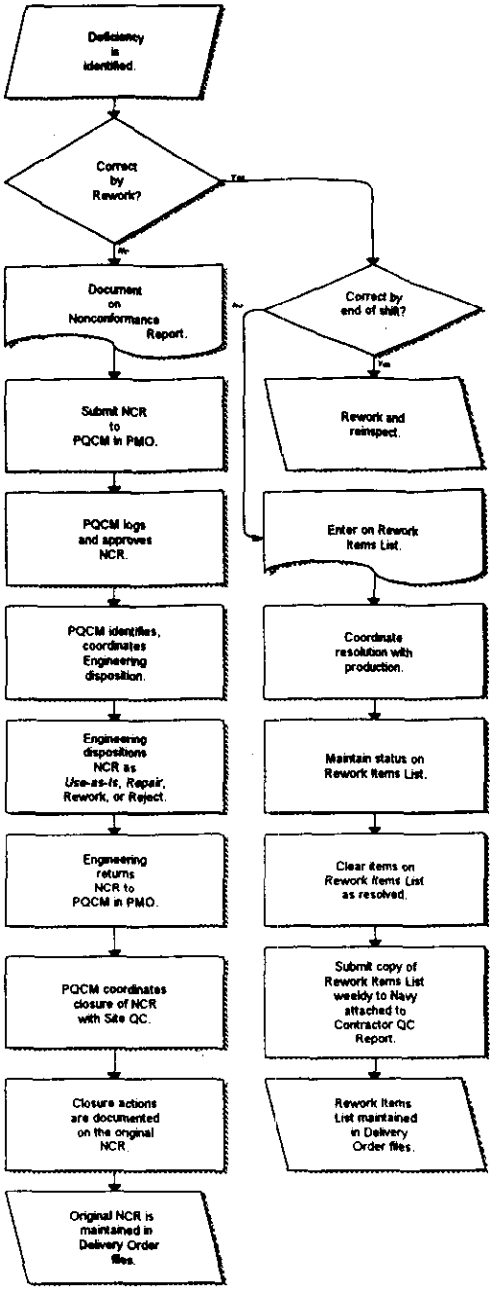

Table 2-1

Typical Quality Records[11]

This table is to be used as a guide for the generation and disposition of Quality Records. Refer to the Delivery Order Work Plan documents for specific documentation requirements which may differ from those shown in this table.

Document Name	Completed/ Reviewed By	Ultimate Disposition of Record
Contractor Production Report	MK Production Supervision	• ROICC/NTR • Copies to Project File
Contractor Quality Control Report	MK Quality Control	• ROICC/NTR **and ANTR** • Copies to Project File
Chain of Custody Form	MK Sample Technician	• Sample Technician • Copies to Project Files
Rework Items List	MK Quality Control	• ROICC/NTR **and ANTR** • Copies to Project Files
Field Inspection Checklists	MK Quality Control	• Copies to Project Files
QC Meeting Minutes	MK Quality Control	• ROICC/NTR **and ANTR** • Copy to Project Files
Nonconfor-mance Reports	MK Quality Control	• PQCM/PMO • Copy to Project File
Final Inspections/BOD letter	MK Quality Control	• Completion Report • Copy to Project File
As-Built Drawings	MK Quality Control	• Completion Report • Copy to Project File
Geotechnical Test Reports	MK Quality Control	• Completion Report • Copies to Project File
Laboratory Deliverables (Verified/Validated)	MK Project Chemist	• Data Repository (Project Chemist) **and ANTR** • Completion Reports (summaries by the Project Chemist)

9.0 LABORATORY QUALIFICATION REQUIREMENTS

9.1 Analytical Chemistry Laboratories

To support the analytical chemistry needs of the District II RAC program, MK takes full responsibility for the selection of qualified laboratories capable of performing quality analysis and data. Because the quality of analytical chemistry data must be beyond reproach, only laboratories meeting certain minimum qualification requirements will be utilized. MK will utilize analytical laboratories that have previously performed or are currently performing analysis in support of the Navy's Installation Restoration Program (IRP) per NEESA 20.2-047B (1988 Edition). Laboratories shall have undergone the laboratory approval process as defined in the subject NEESA document for the scope of work performed under the IRP. Because the NEESA approval process is project specific and not global, previous NEESA evaluations and approvals are not applicable to work performed on the District II RAC. However, they do provide some indication of the laboratory's experience working under the Navy's NEESA analytical requirements.

~~As an alternate to utilizing laboratories with previous NEESA approval, MK may utilize analytical laboratories that have undergone successful reviews by other U.S. government agencies, including:~~

- ~~EPA Contract Laboratory Program (CLP)-Current participation in organics or inorganics statements of work;~~
- ~~Army Corps of Engineers-Defense Environmental Restoration Program (DERP); Missouri River Division (MRD);~~
- ~~Air Force Center for Environmental Excellence (AFCEE)~~

MK must use an analytical laboratory that has undergone U.S. EPA Region 5 RCRA approval.

The experience gained under the foregoing programs must be relevant to the scope of work to be performed under the District II RAC.

The MK PQCM and the Project Chemist will provide a listing of qualified laboratories to the procurement department, from which solicitations for competitive bids are made. Proposals received by responding laboratories are evaluated by the PQCM and the Project Chemist for quality and technical considerations. The evaluation consists of reviewing the technical proposal, statements of qualification, QA Program Plans, Standard Operating Procedures, ability to provide electronic data reporting, proper reporting formats, laboratory capacity, and ability to meet reporting limits for the analytical methods listed in the solicitation. Any exceptions to the solicitation or suggested alternatives are evaluated for feasibility.

A QA systems audit of the successful proposing laboratory may be scheduled to verify implementation of details of the laboratory's QAPP. The performance of an audit is based on the volume of work to be performed by the laboratory, and other factors, such as previous use of the laboratory. Any necessary corrective action identified as a result of an audit will be documented, and the laboratory required to respond to MK, stating the measures to be taken to correct the condition. The PQCM and the Project Chemist will work closely to ensure that any laboratory corrective action is adequate to provide the level of quality required on the District II RAC.

QAPjP's prepared for the Delivery Order provide the detailed requirements for analytical sampling, from collection in the field to analysis in the laboratory. Additionally, specific requirements for data deliverables are included in the QAPjP.

9.2 Geotechnical and Material Testing Laboratories

Independent geotechnical and material testing laboratories shall be evaluated by MK in accordance with this plan to ensure that the laboratory is qualified to perform testing in support of District II RAC program requirements. Accredited and non-accredited laboratories may be utilized provided the conditions contained in this section are met.

9.2.1 Accredited Laboratories

Independent testing laboratories that are accredited shall comply with the following accreditation programs, as applicable to the scope of work to be performed:

- **National Institute of Standards and Technology (NIST)**
- **National Voluntary Laboratory Accreditation Program (NVLAP)**
- **American Association of State Highway and Transportation Officials (AASHTO) Program**
- **American Association for Laboratory Accreditation (AALA) Program**

A copy of the independent testing laboratory certificate of accreditation, the scope of accreditation, and the latest directory of the accrediting organization for accredited laboratories shall be furnished to MK for subsequent submittal to the Navy Contracting Officer. The scope of an independent laboratory's accreditation shall include the test methods required by contract and specification requirements.

9.2.2 Non-accredited Laboratories

Independent testing laboratories that are not accredited per the above, shall prepare certified statements, signed by an official of the testing laboratory, and shall be submitted to the Navy Contracting Officer for approval and attest that the proposed laboratory meets or conforms to the following requirements:

- Sampling and testing shall be under the technical direction of a registered Professional Engineer (P.E.) with at least 5 years of experience in sampling and testing;
- Laboratories engaged in testing of concrete and concrete aggregates shall meet the requirements of ASTM C 1077, 1990;
- Laboratories engaged in testing of bituminous paving materials shall meet the requirements of ASTM D 3666, 1990 (Rev. A);
- Laboratories engaged in testing of soil and rock, as used in engineering design and construction, shall meet the requirements of ASTM D 3740, 1988; and
- Laboratories engaged in nondestructive testing (NDT) shall meet the requirements of ASTM E 543, 1989 (Rev. A).

Prior to utilization of any non-accredited testing laboratory, the Contracting Officer shall be notified by MK and afforded the opportunity to inspect the proposed testing laboratory's facilities and records. Records subject to inspection include equipment inventory, equipment calibration dates and procedures, library of test procedures, audit and inspection reports by agencies conducting laboratory evaluations and certifications, testing and management personnel qualifications, test report forms, and the laboratory's internal QC procedures.

MK and the Navy Contracting Officer have the right of access to testing laboratories performing work in support of the District II RAC. This includes the right to check laboratory equipment in the laboratory and the laboratory technician's testing procedures, techniques, and other items pertinent to testing, for the purpose of ensuring compliance to testing requirements established in the contract.

9.3 Test Results

Test results shall be signed by a testing laboratory representative authorized to sign certified test results. The laboratory shall furnish all test results to the MK Quality Control Manager. All test results shall contain the following, as a minimum:

- A reference to applicable contract requirements, tests, or analytical procedures used;
- Actual test results; and
- A statement that the item tested or analyzed conforms or fails to conform to specified requirements. The cover sheet for each report shall be stamped in large red letters **"CONFORMS"** or **"DOES NOT CONFORM"** to the specification requirements.

10. INSPECTION/PROGRESS SCHEDULE

The inspections outlined in the Testing Plan and Log follow the Definable Features of Work identified in the Work Plan. Each Definable Feature of Work is subject to Preparatory, Initial, and Follow-up inspections of the work activity. Therefore, the schedule of inspections to be performed works in conjunction with the removal action schedule for the Delivery Order, as included in the Work Plan.

The Site QC Supervisor will work closely with MK Project Management and subcontractors to schedule the performance of Preparatory, Initial, and Follow-up inspections. Scheduling of inspections will be accomplished to minimize interruption to the ongoing work activity. Because the project schedule is dynamic and subject to change due to a number of influences, the Site QC Supervisor will develop an inspection schedule that reflects:

1. The Definable Feature of Work to be performed;
2. The Three Phases of Control (Preparatory, Initial, and Follow-Up);
3. Responsible party for performing the work (i.e., subcontractor name);
4. Schedule date that the inspection is to be performed; **and**
5. Actual date that the inspection was completed.

The inspection schedule will be maintained at the job site and communicated regularly with MK Project Management and applicable subcontractors.

11. REFERENCED PROCEDURES

The following MK Quality Execution Procedures (QEP's) are referenced in the body of the QCP:

- **QEP 8.1** - "Conduct and Control of Inspections"
- **QEP 13.1** - "Identification and Control of Deviations"

QEP's are program procedures issued to the project team. Copies of the pertinent QEP's will be available on site.

~~12. TABLES~~

~~**12.1 Table 1-1:** Quality Program Elements~~

~~**12.2 Table 2-1:** Typical Quality Records~~