UNITED STATES ENVIRONMENTAL PROTECTION AGENCY
REGION 5
77 WEST JACKSON BOULEVARD
CHICAGO, IL 60604-3590

REPLY TO THE ATTENTION OF:

August 19, 1997

DRP-8J

Christine Freeman
Naval Surface Warfare Center
300 Highway 361
Crane, Indiana

RE: FCR Approvals
Bioremediation Facility
Naval Surface Warfare Center
Crane, Indiana

Dear Ms. Freeman:

I have reviewed the Field Clarification Requests (FCRs) that you have submitted to me for review and modification of the Pilot Scale Operational Plan for the Bioremediation Facility. I hereby approve, with various modifications the following FCRs:

FCR PS001	FCR PS002	FCR PS003
FCR PS004	FCR PS005	FCR PS006
FCR PS007	FCR PS008	FCR PS009
FCR PS010		
FCR 027	FCR 028	

FCR PS011 is approved but no electronic version has been modified yet.

Enclosed are the oringinal FCRs signed by me. An electronic copy of all the modified text will be sent to you today. If you have any questions regarding this matter, please contact me when I return on September 4th.

Sincerely,

Carol Witt-Smith
Corrective Action Expert
WMB, IL/IN/MI Section

Recycled/Recyclable-Printed with Vegetable Oil Based Inks on 100% Recycled Paper (40% Postconsumer)

ORIGINAL

NAVFAC Southern Division/ Morrison Knudsen Corporation	District II RAC

FIELD CLARIFICATION REQUEST (FCR)

Delivery Order No.: 4324-0009	**Subcontract No.:** 4324-	**FCR No.:** 4324-0009-FCR-PS001
Pilot Scale Operational Plan		Page 1 of 1

Reference Documents: Pilot Scale Operational Plan, Rev. 5 dated June 6, 1997

Problem / Change Description:

Approval is requested for the following changes:

1). Operational Plan Text
- a. Replace Table of Contents for correction of page numbers. approved EPA added mod date
- b. Section 10.0; Replace Table 10-1 which adds a wheeled tractor for transporting samples and sampling/monitoring equipment within the Biofacility. Modified denial of permanent use of equipment temp basis only on loan from Navy Transportation

2.)Appendix C;
- a. Replace Cover page and Table of Contents to include the list of NSWC Crane MFA utility and foundation drawings. Recommend hand push text instead
- b. Insert the following drawings which incorporates the revised trailer and amendment locations: G100, 4324-0009-01-A, B, and C, P-100, P-101, P-102, and P-103.

3). Appendix D;
- a. Add Table of Contents for SOPs
- b. Replace Figures 4-1 and 4-2 in SOP 4.0 which has been updated for current densities of straw, alfalfa, and turkey manure.
- c. Replace page 1 of 1 in SOP 12.0 which revises section 2.1 to exclude bacteria enumeration of PAHs, VOAs, specific hydrocarbons and oil degraders. approved w/mod. language

4). Appendix F; Replace cover page and Table of Contents which corrects page numbers.

5). Appendix G; Replace "Windrow Process Data- Daily Log" with attached for ease of field technician usage. (rejected)

6). Appendix H; Replace Cover page and Table of Contents which corrects page numbers.

Initiated by	Signature:	Organization: Morrison Knudsen	Date: 06/26/97

Resolution:

If this FCR affects a subcontract, indicate CID number: N/A

Approval by MK PE	Signature:	Date: 6/27/97	Approval by ROICC/NTR or RPM	Signature:	Date 7/2/97
Approval by MK PjM	Signature: D Beall	Date: 6/27/97	Additional Reviews: By/Date Christine D. Freeman 7/9/97 Approved 1a, 2a, b, 3a, b, c w/mod, 4, & 6. Denial of permanent use of 1b. Suggested change given approval rejected daily process log 7/24/97 #5		
Approval by MK QC	Signature: Steven Cory	Date: 6/27/97			
Approval by MK REG SPT.	Signature: Steven Cory	Date: 6/27/97			

Regulator Approval/Notification Recommended:
Yes ☒ No ☐

Carol Wilt 8/14/97

A:FCRPS001.DOC

FOR PSCC1

TABLE OF CONTENTS

SECTION		PAGE
1.0	INTRODUCTION	1-1
1.1	PURPOSE	1-1
1.2	PRIMARY OBJECTIVES	1-2
1.2.1	Performance Goals	1-6
1.2.2	Process Goals	1-6
1.3	BACKGROUND	1-7
1.4	BENCH-SCALE TREATABILITY RESULTS	1-11
1.4.1	Phase I	1-11
1.4.2	Phase II	1-11
1.4.3	Phase III	1-11
2.0	REGULATORY COMPLIANCE	2-1
2.1	CONTAMINATED MEDIA CLASSIFICATION	2-1
2.2	STORM WATER DISCHARGE	2-1
2.3	LANDFILL PERMITTING	2-2
2.4	EXCAVATION PERMITTING	2-2
2.5	SPECIFICATIONS, CODES, AND STANDARDS	2-2
3.0	PROJECT ORGANIZATION	3-1
4.0	SCHEDULE	4-1
5.0	BIOREMEDIATION FACILITY DESCRIPTION	5-1
5.1	COMPOST BUILDING AREA	5-1
5.2	AMENDMENT STORAGE AREA	5-2
5.3	AMENDMENT HAUL ROAD AREA	5-2
5.4	EQUIPMENT AND PERSONNEL DECONTAMINATION AREA	5-2
5.5	OFFICE AND LABORATORY TRAILER AREA	5-3
5.6	STORM WATER DIVERSION AND RETENTION CONTROLS	5-3
6.0	PILOT SCALE OPERATION	6-1
6.1	RECIPE SELECTION	6-2
6.2	SOIL EXCAVATION, SCREENING, AND SITE RESTORATION	6-6
6.2.1	Soil Excavation	6-7
6.2.2	Soil Screening	6-7
6.2.3	Backfilling and Site Restoration	6-8
6.3	AMENDMENT SUPPLY AND STORAGE	6-11
6.4	LOAD AMENDMENTS INTO GRINDER/MIXER	6-13
6.5	LOAD AMENDMENT BLEND INTO WINDROW	6-13
6.6	LOAD SOIL INTO WINDROW	6-14

approved 8/14/97

TABLE OF CONTENTS (continued)

SECTION		PAGE
6.7	TURN/MIX WINDROW	6-15
6.8	LANDFILL PERMITTING	6-18
6.9	UNLOAD WINDROW AND TRANSPORT FOR DISPOSAL	6-18
7.0	AUXILIARY SYSTEMS DESCRIPTION	7-1
7.1	ANALYTICAL SERVICES	7-1
7.1.1	Field Screening Services	7-1
7.1.2	Analytical Laboratory Services	7-2
7.2	DECONTAMINATION	7-2
7.2.1	Excavation Site Equipment and Rock Washing	7-2
7.2.2	Biofacility Truck and Equipment Washing	7-3
7.2.3	Personnel Decontamination Shower Trailer	7-3
7.3	WATER/FLUID COLLECTION AND DISPOSITION	7-3
7.3.1	Compost Building Sump Water	7-3
7.3.2	Truck and Equipment Decontamination Water	7-4
7.3.3	Storm Water Diversion and Retention Pond Water	7-4
8.0	PROCESS PARAMETERS AND MONITORING	8-1
8.1	PROCESS PARAMETERS	8-1
8.2	PROCESS MONITORING	8-1
8.2.1	Temperature Monitoring	8-2
8.2.2	Moisture Level Monitoring	8-4
8.2.3	pH Level Monitoring	8-6
8.2.4	Total Organic Carbon Level Monitoring	8-6
8.2.5	Nitrogen Level Monitoring	8-6
8.2.6	Oxygen Level Monitoring	8-7
8.2.7	Explosives Level Monitoring	8-7
8.2.8	Metal Contaminants Monitoring	8-8
8.2.9	Air Monitoring	8-9
9.0	SAMPLING AND ANALYSIS	9-1
9.1	COMPOST WINDROW SAMPLING	9-1
9.2	FLUID COLLECTION SYSTEMS SAMPLING	9-1
9.3	PRE-EXCAVATION SITE SAMPLING	9-3
9.3.1	Sampling Areas	9-3
9.3.2	Soil Sampling	9-3
9.3.3	Marking Grid Blocks for Excavation	9-4

approved 8/14/97

FCRPSOP 1

TABLE OF CONTENTS (continued)

SECTION		PAGE
10.0	OPERATING EQUIPMENT DESCRIPTIONS	10-1
11.0	QUALITY CONTROL	11-1
12.0	WASTE MANAGEMENT	12-1
13.0	ENVIRONMENTAL PROTECTION	13-1
	13.1 INTRODUCTION	13-1
	13.2. Dust Control	13-1
	13.3. Erosion and Sediment Control	13-1
14.0	RECORDS AND RECORDING	14-1
15.0	SITE SAFETY, HEALTH, EMERGENCY RESPONSE AND CONTINGENCY PLAN	15-1
	15.1 SITE SAFETY AND HEALTH PLAN	15-1
	15.2 AIR MONITORING	15-1
	15.3 AIR SAMPLING	15-2
	15.4 NOISE MONITORING	15-3
16.0	DEMOBILIZATION	16-1
	16.1 EQUIPMENT	16-1
	16.2 PROJECT FACILITIES	16-1
17.0	REFERENCES	17-1

Approved CCW 8/14/97

LIST OF TABLES

TABLE		PAGE
1-1	REMEDIAL PERFORMANCE GOALS AND ACCEPTABLE REPORTING LIMITS	1-3
1-2	PROCESS GOALS	1-7
1-3	SUMMARY OF PREVIOUS SOIL BORING RESULTS - MINE FILL A	1-9
1-4	MIX #7 BENCH-SCALE TEST RESULTS	1-12
1-5	DEWAR RECIPES	1-14
3-1	PROJECT RESPONSIBILITIES	3-3
6-1	FINAL PILOT SCALE WINDROW RECIPES (MIXES 1-6)	6-4
6-1a	FINAL PILOT SCALE WINDROW RECIPES (MIX 7)	6-5
8-1	NON-CONTAMINANT PROCESS PARAMETERS	8-2
8-2	EXPLOSIVES PROCESS	8-8
9-1	SAMPLING AND ANALYSIS SCHEDULE[1]	9-2
10-1	OPERATING EQUIPMENT	10-1

LIST OF FIGURES

FIGURE		PAGE
1-1	SWMU 12/14, MINE FILL A	1-8
1-2	SWMU 12/14, MINE FILL A SAMPLE LOCATIONS	1-10
4-1	PILOT SCALE OPERATION SCHEDULE	4-2
6-1	SOIL EXCAVATION AREA	6-9
6-2	TRANSPORTATION ROUTE FROM MINE FILL A TO BIOFACILITY	6-10
6-3	WINDROW FORMATION DIMENSIONS	6-16
6-4	SOIL LOADING	6-17
8-1	DECISION FLOW CHART	8-3

APPENDICES

APPENDIX		PAGE
A	PILOT SCALE SITE SAFETY AND HEALTH PLAN	A-1
B	PHOTOGRAPHS	B-1
C	BIOREMEDIATION FACILITY DRAWINGS	C-1
D	STANDARD OPERATING PROCEDURES	D-1
E	SOIL EXCAVATION PLAN	E-1
F	SUPPLEMENT TO QAPP	F-1
G	OPERATION FORMS, QC CHECKLISTS, AND LOGS	G-1
H	QUALITY CONTROL PLAN	H-1

Approved CDS 8/14/97

FCR 3001

10.0
OPERATING EQUIPMENT DESCRIPTIONS

Table 10-1 below provides a list of the major operating equipment that will be used at the excavation sites and composting facility.

TABLE 10-1
OPERATING EQUIPMENT

Equipment	Qty.	Specifications	Description/Use
Portable Soil Screener	1	Minimum 50 ton/hr capacity; screen material to 1-1/2 inches; with feed hopper and discharge conveyor	Screening contaminated soil at the excavation sites.
Semi-tractor Truck and Live Bottom Trailer	2	Minimum 48 cu. yd. capacity, conveyor rear discharge trailer. 0 to 450 cu. ft./hr.	Hauling contaminated soil from the excavation site to the composting facility. Hauling treated material to the disposal site.
Hopper/Conveyor System	1	150 ton/hr capacity.	Self powered side discharge conveyor for loading soil onto windrow; towed by Live Bottom Trailer.
Backhoe/Loader	1	3 - 4 cu. yd. bucket loader	Excavating material, loading screen, and loading trucks at the excavation sites.
Steer Skid Loader	1	½ to 1/3 cu. yd excavator	Excavating material in areas of limited access and cleaning isles between windrows.
Grinder/Mixer	1	700 cu.ft. capacity tractor PTO driven, Grinder/Mixer with side discharge conveyor	Grinding and mixing of amendments prior to forming windrow
Tractor	1	Agricultural farm tractor with loader, bale handler and spear attachments	Moving and unloading bales & manure, towing grinder/mixer unit.
Center Pivot Wheel Loader	1	6-7 cu. yd. bucket center pivot loader with claw attachment	Loading amendments into grinder/mixer, and unloading windrows into Trucks and adjusting shape of windrows.
Water Tank Truck	1	1000 gallon (minimum)poly tank, truck mounted with valve and pump	For collecting and transporting decon liquids to site treatment facility or to compost buildings
Water Tank - Stationary	1	1500 to 2000 gallon poly storage tank with discharge valve	For storage of decon fluids awaiting analytical results.
Portable High Press Spray Wash Unit	1	1500 to 2400 psi portable gas powered spray wash unit.	For decontamination of trucks, equip., and rocks at the excavation site.
Portable Suction Pumps	3	50 gpm self priming suction pump	For pumping out building, decon facility, and storm water retention pond sumps.
Composter	1	Self-propelled, 20 foot windrow straddle type composting machine	Forming and turning windrows.
Tractor, wheeled warehouse	**1**	**4000 lb. Capacity for towing loaded carts, aircraft, and heavy equip.**	**~~Transporting sampling~~ equipment and samples within ~~Bio~~facility.**
Explosives-contaminated Water Pumper Trailer	1	Trailer mounted 1000-gallon minimum steel tank with pump.	Transporting accumulated liquids to on-site treatment facilities

modified add push cart option

do not want permanent purchase

Additional equipment shall be leased as needed for short-term assignments. To minimize downtime of equipment, the program will include a schedule of important preventative maintenance tasks and lists of any critical spare parts. Daily, weekly, monthly, and periodic maintenance requirements for the major pieces of equipment are provided in Appendix G. Each major equipment operation and maintenance manual will be consulted for details.

FCRPSOP.1

APPENDIX C

BIOREMEDIATION FACILITY DRAWINGS

LIST OF DRAWINGS

G-100	Bioremediation Facility, Master Site/Drainage Plan
4324-0009-01-A	NSWC Crane, Soil Remediation Facility Process Flow
4324-0009-01-B	NSWC Crane, Wastewater Collection Process Flow
4324-0009-01-C	NSWC Crane, Soil Excavation Site Process Flow
P-100	Bioremediation Facility, Amendment Loading - Windrows #1-4
P-101	Bioremediation Facility, Amendment Loading - Windrows #5-8
P-102	Bioremediation Facility Soil Loading - Windrows #1-4
P-103	Bioremediation Facility Soil Loading - Windrows #5-8

NSWC MINE FILL A STATION DRAWINGS

176293	Box Emptying Bldg 153 & TNT Storage Bldg 154, Plant A
176295	Box Emptying & TNT Storage Bldgs, 1st Flr Framing & Fnd. Plans
176296	Box Emptying & TNT Storage Bldgs, 2nd Floor & Roof Framing Plans
176297	Box Emptying & TNT Storage Bldgs, 1st Flr Plans & Elevations
176299	Box Emptying & TNT Storage Bldgs, Sections & Elevations
176300	Box Emptying & TNT Storage Bldgs, Sections and Details
176301	Box Emptying & TNT Storage Bldgs, Windows and Doors Details
176302	Box Emptying & TNT Storage Bldgs, Conveyors and Equipment
180484	"A" Area - Conveyor N0.2 Between Bldg. 152 & 153
187419	Box Emptying and TNT Storage Bldgs, Box Conveyor General Drawing
187421	Box Emptying and TNT Storage Bldgs, Details of Box Top Conveyor
571931	MFA Plot Plan - General & Steam
571933	MFA Plot Plan, Ele., Tele., Fire Al., Water, and San. Sewer

Approved 8/14/97 CWS

FC RPS001

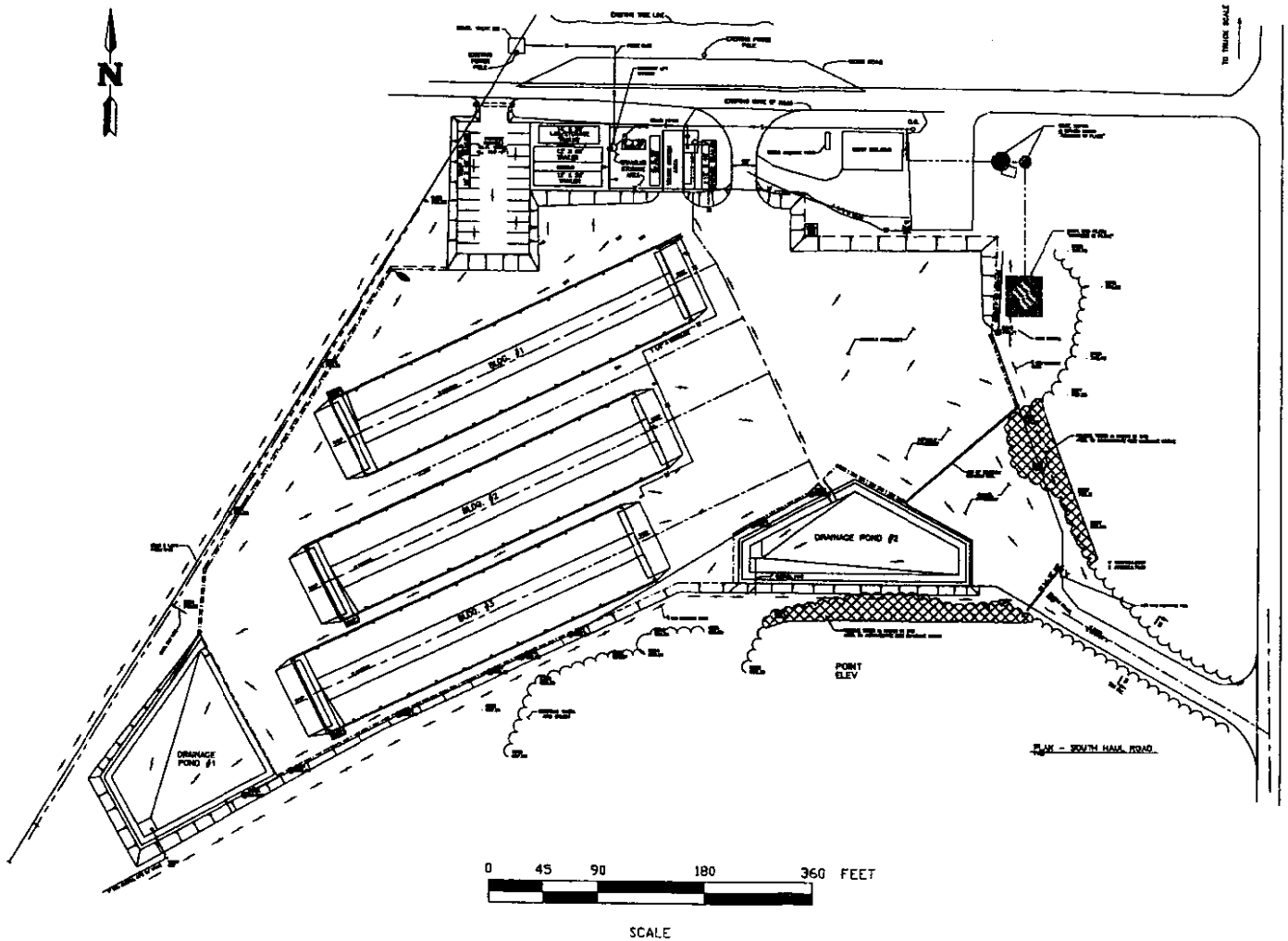

LEGEND

- DENOTES DRAINAGE FLOW
- DENOTES ASPHALT BERM
- 3100 / 718.04 DENOTES EXISTING POWER POLE
- DENOTES EXISTING SANITARY SEWER MANHOLE
- DENOTES NEW WATER LINE (INSTALL 3' BELOW GRADE)
- SANITARY SEWER LINE

PILOT SCALE
OPERATIONAL PLAN
NSWC CRANE
CRANE, IN

MORRISON KNUDSEN CORPORATION
ENVIRONMENTAL SERVICES

FIGURE G-100
BIOREMEDIATION FACILITY
MASTER SITE PLAN

SOURCE: JACOBS ENGINEERING GROUP | DWG DATE: 6/24/97 | DWG NAME: G-100

FCRPS001

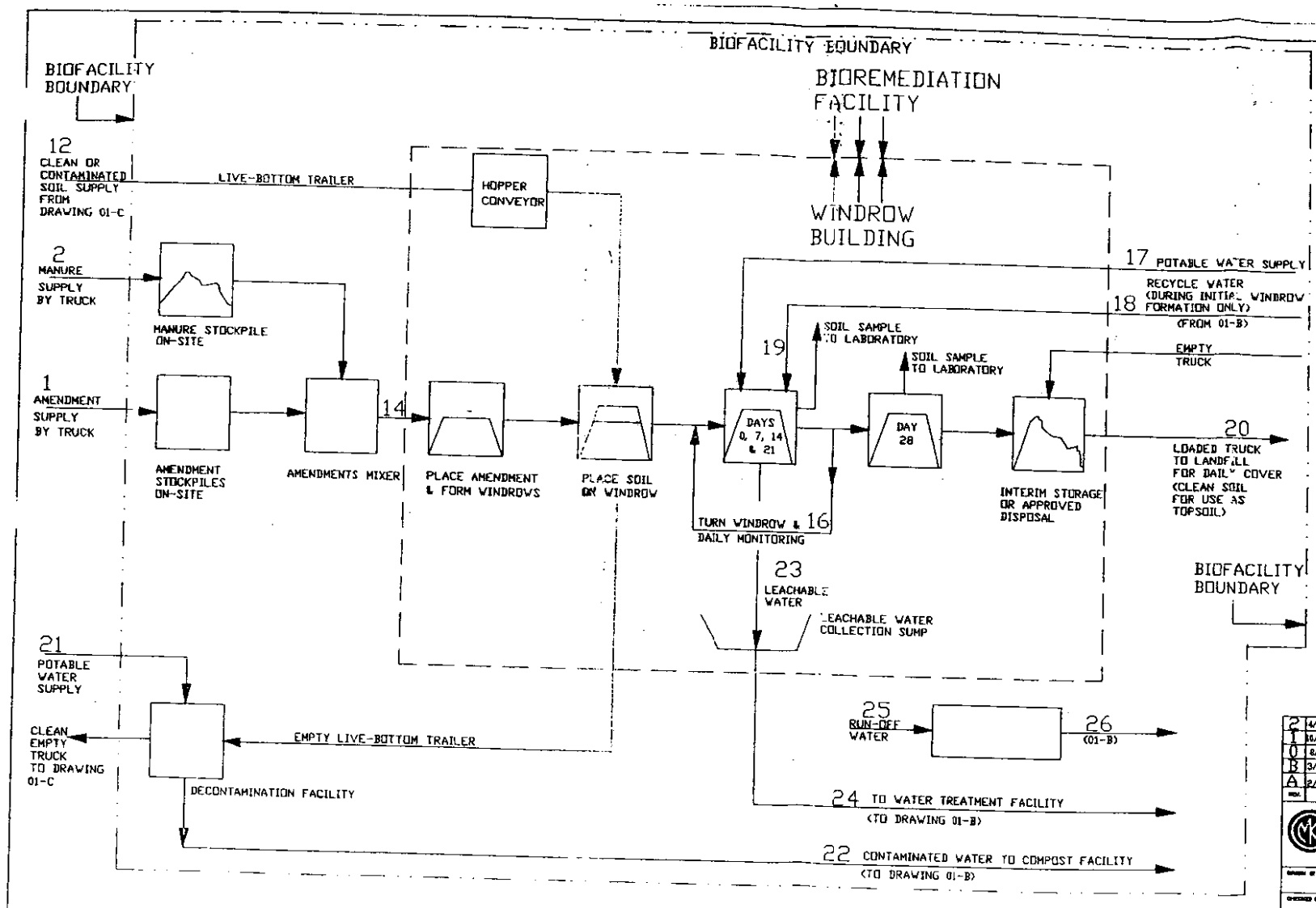

Approved 8/14/97

REV.	DATE	
2	4/15/97	FOR FINAL REVIEW COMMENTS
1	10/21/96	FOR PILOT SCALE APPROVAL
0	8/1/96	FOR APPROVAL
B	3/15/96	FOR REVIEW
A	2/19/96	FOR REVIEW

MORRISON KNUDSEN CORPORATION
ENGINEERING, CONSTRUCTION AND ENVIRONMENTAL GROUP
MK-FERGUSON PLAZA 1360 WEST 3RD STREET
CLEVELAND, OHIO 44113-1496 (216) 523-5600

DRAWN BY RW
CHECKED BY ST
NSWC CRANE
SOIL REMEDIATION FACILITY
DON MILLER
SCALE N/A
4324-0009-01-A

FORPSCE 1

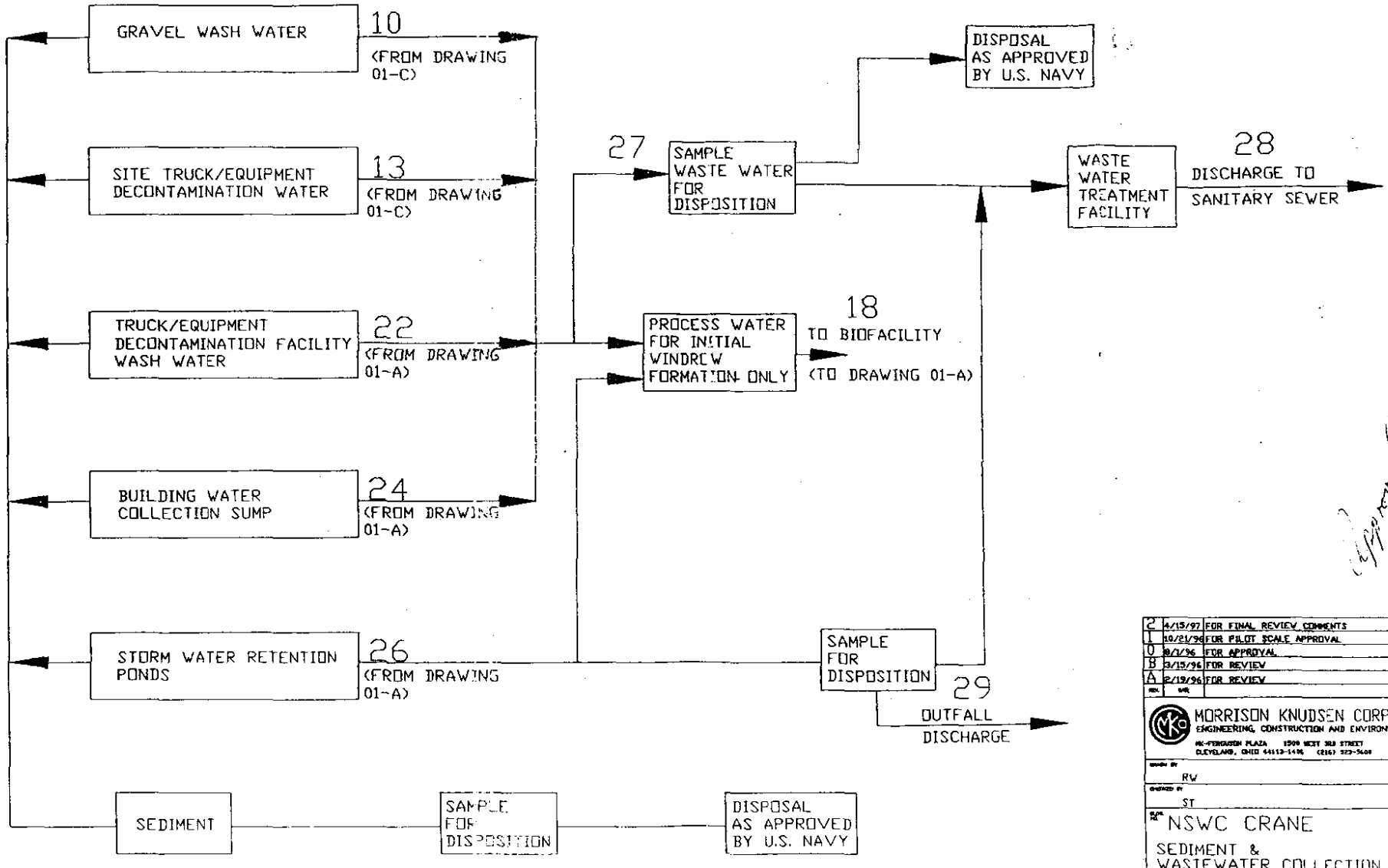

Approved rev 3 8/14/97

REV.	DATE	DESCRIPTION
2	4/15/97	FOR FINAL REVIEW COMMENTS
1	10/21/96	FOR PILOT SCALE APPROVAL
0	8/1/96	FOR APPROVAL
B	3/15/96	FOR REVIEW
A	2/19/96	FOR REVIEW

MORRISON KNUDSEN CORPORATION
ENGINEERING, CONSTRUCTION AND ENVIRONMENTAL GROUP
MK-FERGUSON PLAZA 1500 WEST 3RD STREET
CLEVELAND, OHIO 44113-1406 (216) 522-3600

DRAWN BY RW
CHECKED BY ST
PLANT NO. NSWC CRANE
SEDIMENT & WASTEWATER COLLECTION
DESIGNER DON MILLER
SCALE N/A
DRAWING NO. 4324-0009-01-B

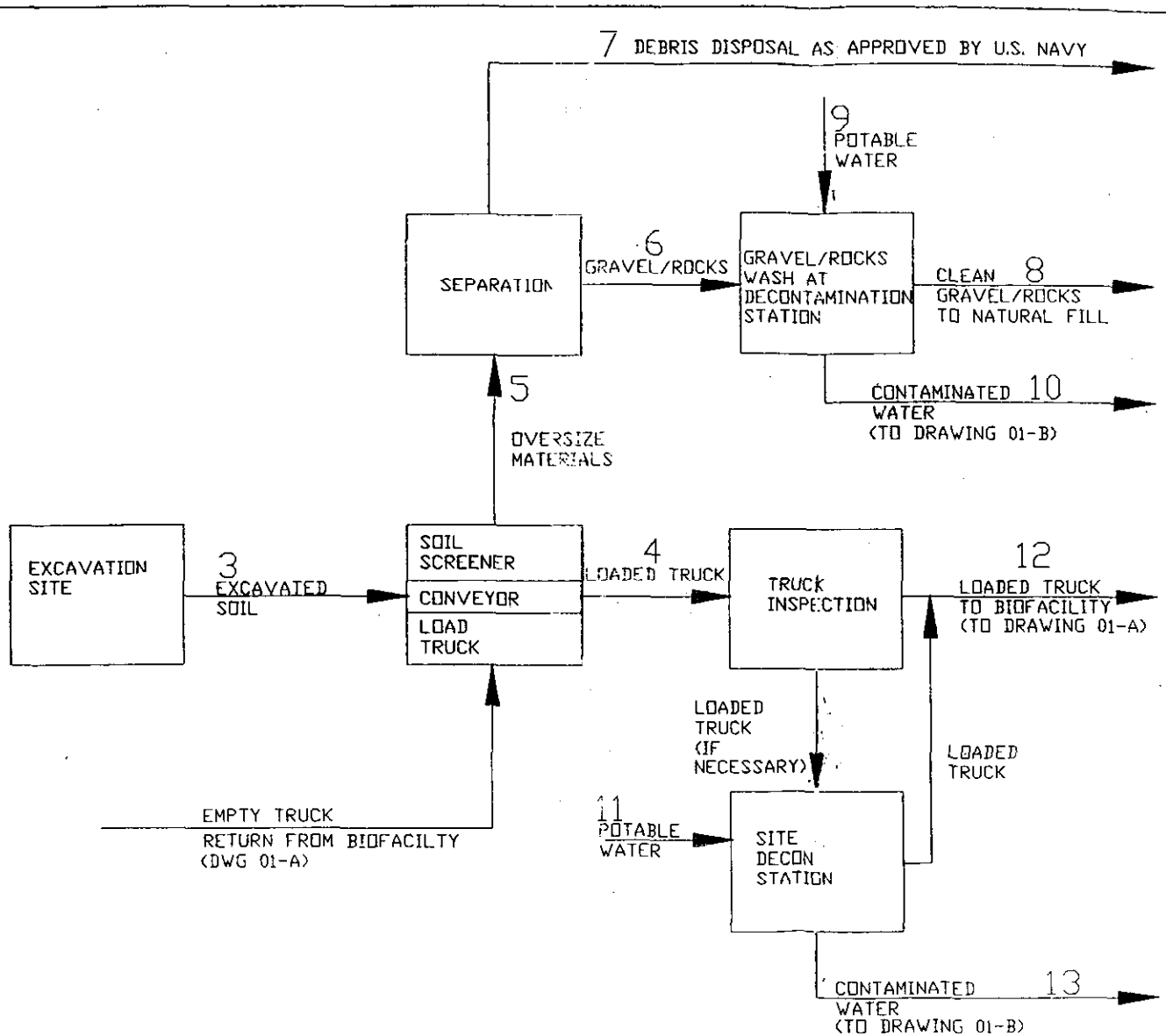

FRP5001

REV.	DATE	DESC
2	4/15/97	FOR REVIEW COMMENTS
1	10/21/96	FOR PILOT SCALE APPROVAL
0	8/1/96	FOR APPROVAL
B	3/15/96	FOR REVIEW
A	2/19/96	FOR REVIEW

MORRISON KNUDSEN CORPORATION
ENGINEERING, CONSTRUCTION AND ENVIRONMENTAL GROUP
MK-FERGUSON PLAZA 1500 WEST 3RD STREET
CLEVELAND, OHIO 44113-1406 (216) 523-5600

DRAWN BY RW
DESIGNED BY ST
PLOT NO.

NSWC CRANE

SOIL EXCAVATION SITE

CHECKED DON MULLER
SCALE N/A
DRAWING NO. 4324-0009-01-C

Approved 8/11/97

FCRPSC.C1

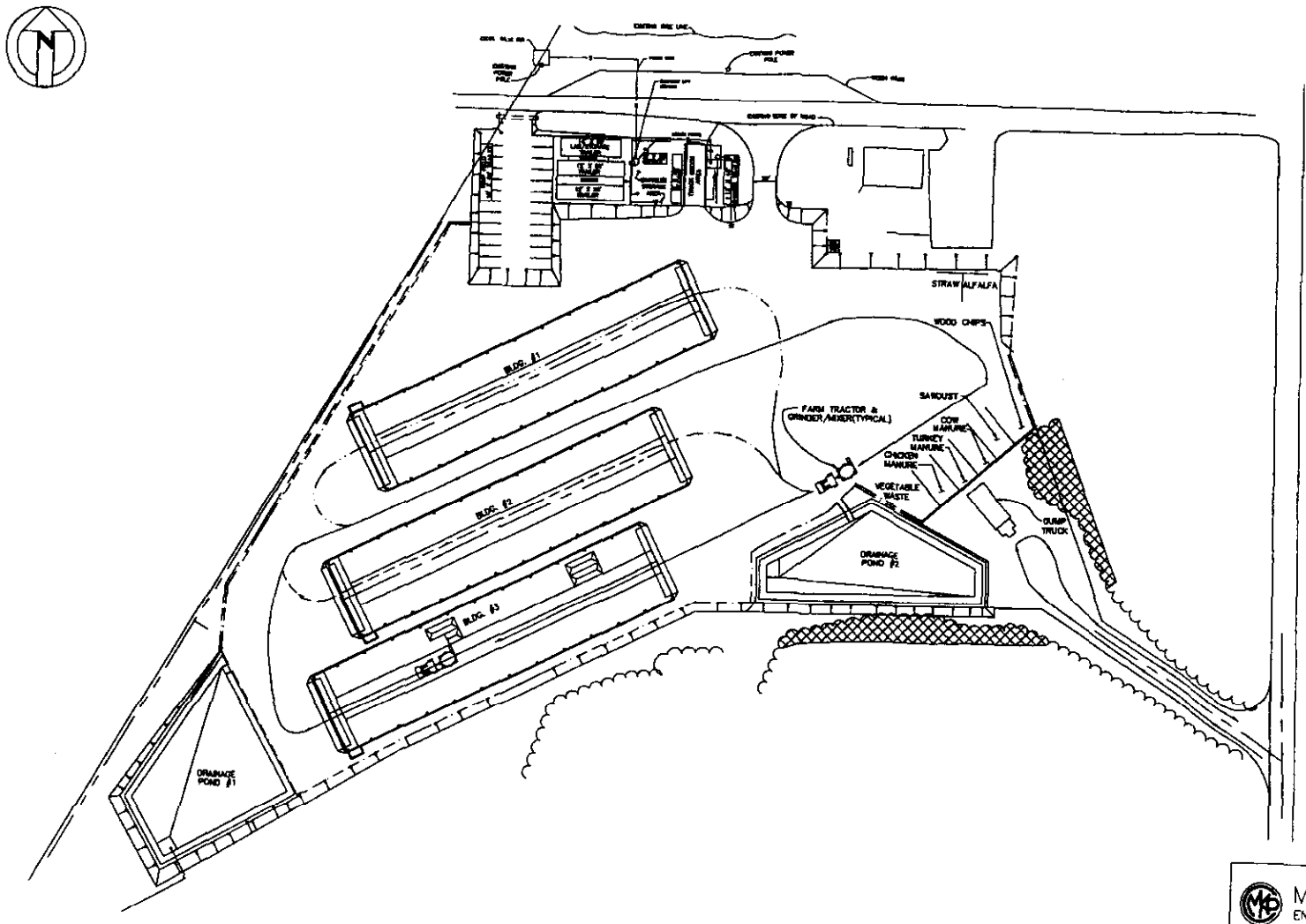

Approved
RJS
5/14/97

MORRISON KNUDSEN
ENVIRONMENTAL GROUP

BIOREMEDIATION FACILITY
CRANE N.S.W.C.
AMENDMENT LOADING WINDROWS 1-4

P-100	6-24-97	REV. 4

FCAPS001

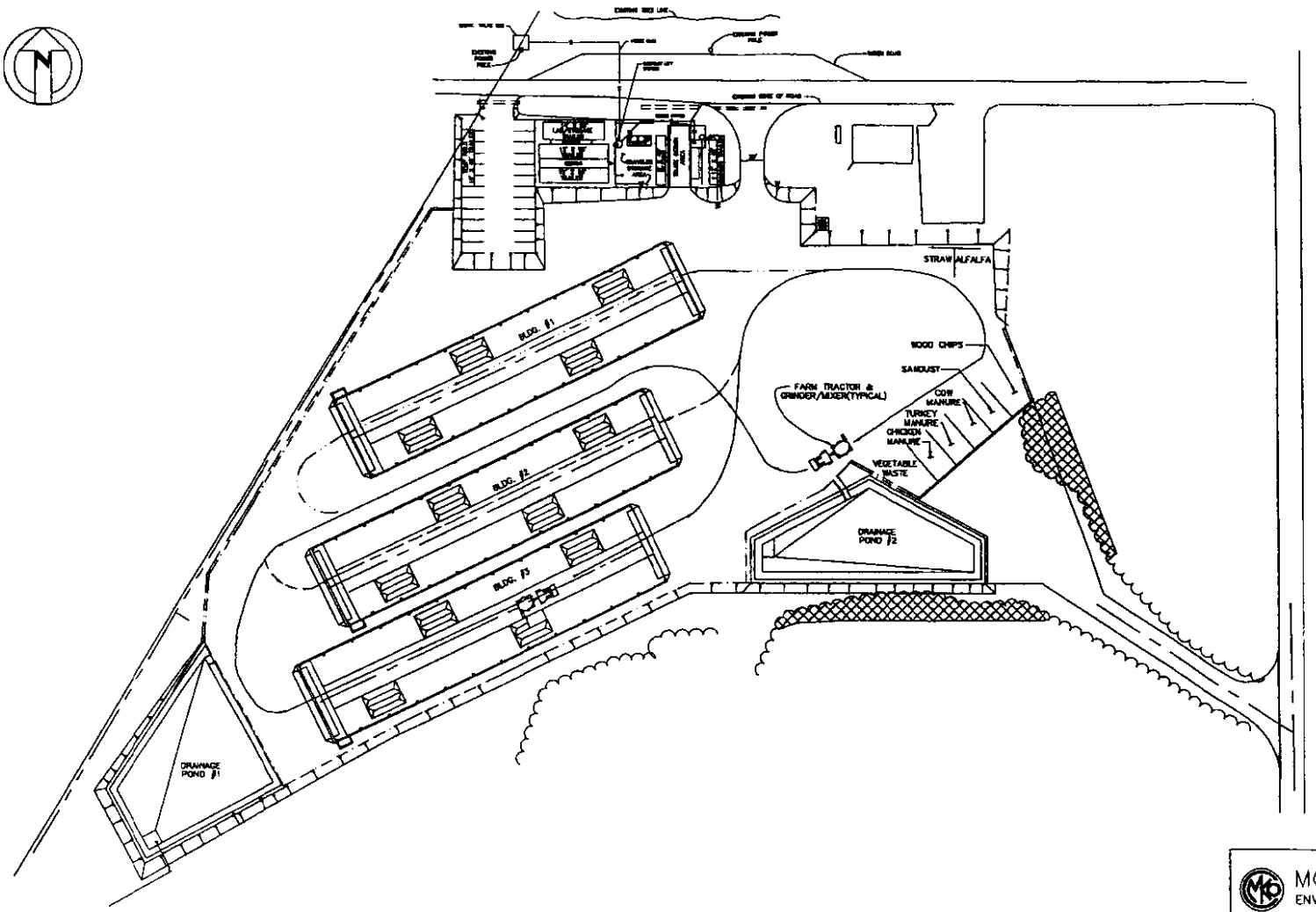

Approved 8/14/97

MORRISON KNUDSEN
ENVIRONMENTAL GROUP

BIOREMEDIATION FACILITY
CRANE N.S.W.C.
AMENDMENT LOADING WINDROWS 5-8

P-101	6-24-97	REV. 4

FCRB.c.1

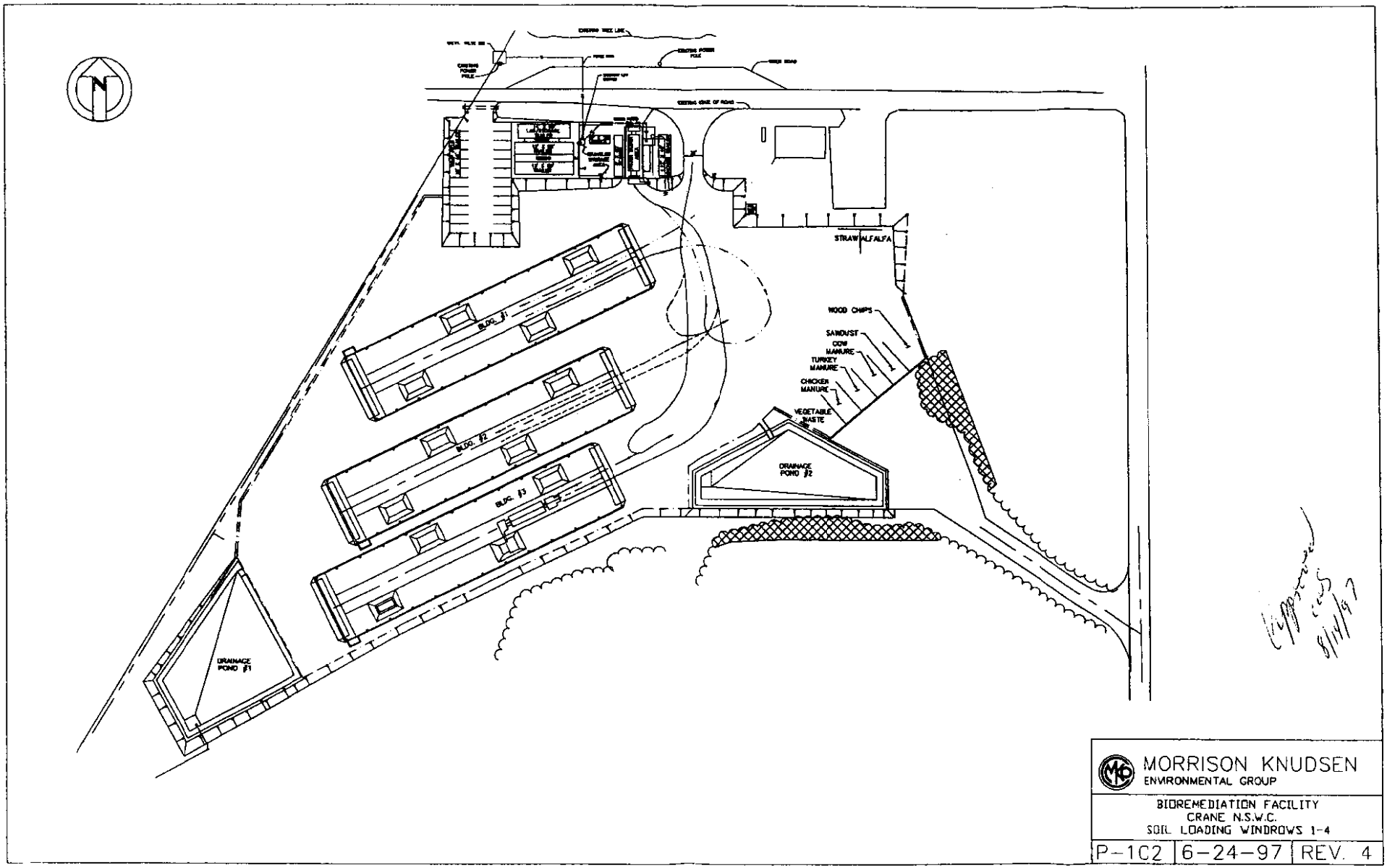

Approved 8/14/97

FLRPS001

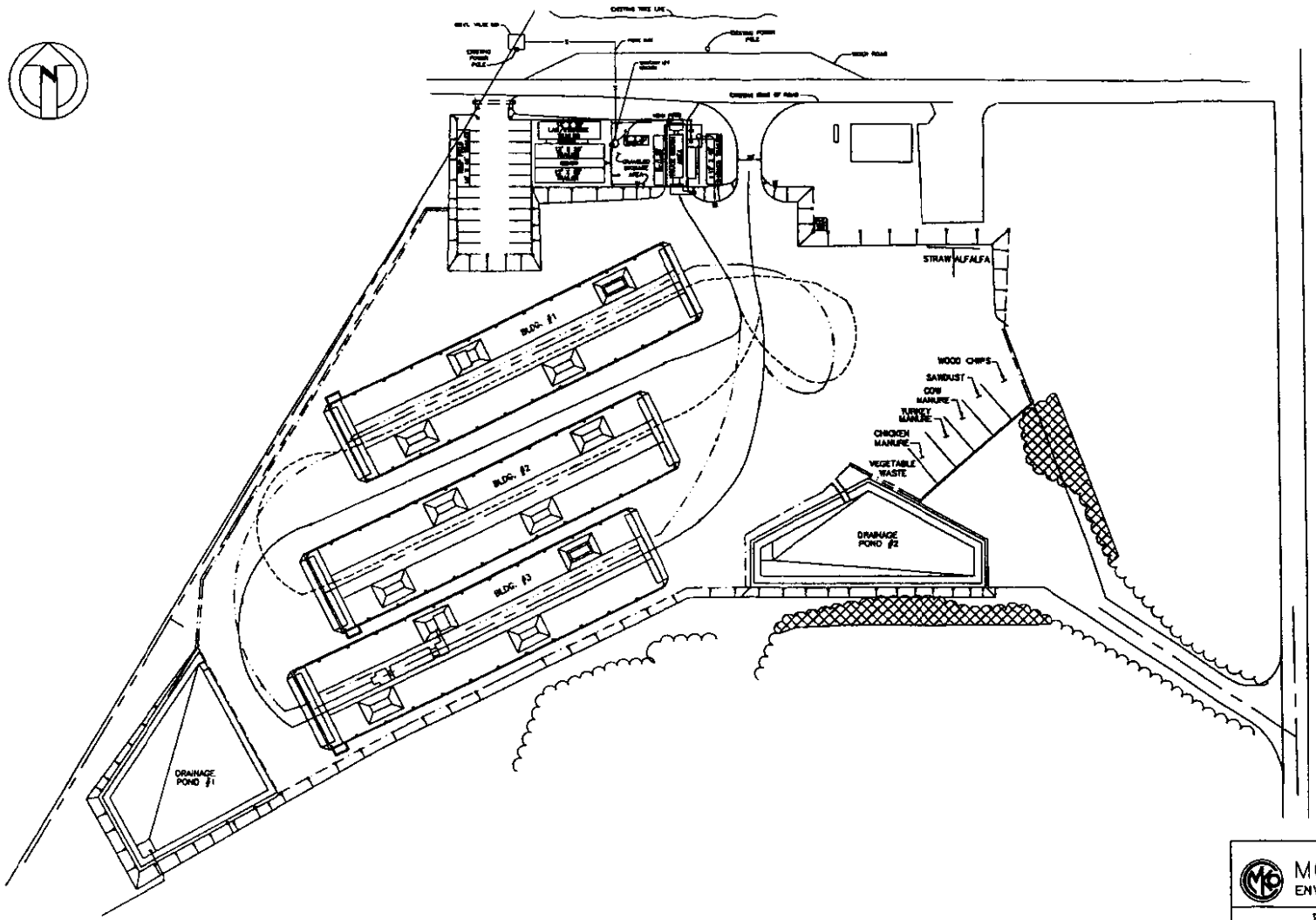

MORRISON KNUDSEN
ENVIRONMENTAL GROUP

BIOREMEDIATION FACILITY
CRANE N.S.W.C.
SOIL LOADING WINDROWS 5-8

P-103	6-24-97	REV. 4

APPENDIX D

STANDARD OPERATING PROCEDURES

FCR PSCC 1

LIST OF STANDARD OPERATING PROCEDURES

SOP 1.0	MEASUREMENT AND MONITORING OF FIELD PARAMETERS
SOP 2.0	SAMPLE COLLECTION FOR OFF-SITE LABLRATORY ANALYSIS
SOP 3.0	DECONTAMINATION OF FACILITIES, EQUIPMENT, AND PERSONNEL
SOP 4.0	AMENDMENT PROPORTIONING AND MIXING
SOP 5.0	LOADING OF AMENDMENTS INTO WINDROWS
SOP 6.0	TRANSPORT AND LOADING SOIL INTO WINDROWS
SOP 7.0	SOIL SCREENING OPERATION
SOP 8.0	WINDROW TURNING AND MOISTURE ADDITION
SOP 9.0	TRUCK SCALE OPERATION
SOP 10.0	TIME INTEGRATED INDUSTRIAL HYGIENE AIR SAMPLING
SOP 11.0	OCCUPATIONAL NOISE MONITORING
SOP 12.0	BIOLOGICAL PROCESS MONITORING PROCEDURE

Approved 8/14/97

NSWC CRANE

PILOT SCALE MIX RECIPIES

MIX #1

Ingredient	Qty. (CY)	Qty. (lbs.)	% Carbon	% D.M.	Carbon (lbs.)	% Nitrogen	Nitrogen (lbs.)	C:N Ratio	Cost ($/Ton)
Straw		0	0.4240	0.88	0.00	0.0123	0.00	34.47	$65
Chicken Manure		0	0.1870	0.88	0.00	0.0558	0.00	3.35	$25
Alfalfa	15	2,025	0.3290	0.85	566.29	0.0314	54.05	10.48	$165
Cow Manure		0	0.3820	0.21	0.00	0.0257	0.00	14.86	$22
POTW Waste	15	25,275	0.0006	0.25	3.49	0.0005	3.22	1.08	$1
Saw Dust	7.5	3,075	0.6000	0.61	1,125.45	0.0008	1.50	750.00	$20
Wood Chips	7.5	3,975	0.6000	0.88	2,098.80	0.0008	2.80	750.00	$20
Totals	45	34,350			3,794.03		61.57	61.62	

Mix Density (lbs/CY) = 763

Mix Unit Cost ($/CY) = $5.56

MIX #2

Ingredient	Qty. (CY)	Qty. (lbs.)	% Carbon	% D.M.	Carbon (lbs.)	% Nitrogen	Nitrogen (lbs.)	C:N Ratio	Cost ($/Ton)
Straw		0	0.4240	0.88	0.00	0.0123	0.00	34.47	$65
Chicken Manure	21	30,450	0.1870	0.88	5,010.85	0.0558	1,495.22	3.35	$25
Alfalfa		0	0.3290	0.85	0.00	0.0314	0.00	10.48	$165
Cow Manure		0	0.3820	0.21	0.00	0.0257	0.00	14.86	$22
Vegetable Waste		0	0.4000	0.30	0.00	0.0140	0.00	28.57	$95
Saw Dust		0	0.6000	0.61	0.00	0.0008	0.00	750.00	$20
Wood Chips	24	12,720	0.6000	0.88	6,716.16	0.0008	8.95	750.00	$20
Totals	45	43,170			11,727.01		1,504.17	7.80	

Mix Density (lbs/CY) = 959

Mix Unit Cost ($/CY) = $11.29

MIX #3

Ingredient	Qty. (CY)	Qty. (lbs.)	% Carbon	% D.M.	Carbon (lbs.)	% Nitrogen	Nitrogen (lbs.)	C:N Ratio	Cost ($/Ton)
Straw		0	0.4240	0.88	0.00	0.0123	0.00	34.47	$65
Chicken Manure		0	0.1870	0.88	0.00	0.0558	0.00	3.35	$25
Alfalfa	15	2,025	0.3290	0.85	566.29	0.0314	54.05	10.48	$165
Cow Manure		0	0.3820	0.21	0.00	0.0257	0.00	14.86	$22
Turkey Manure	15	11,745	0.4160	0.74	3,615.58	0.0260	225.97	16.00	$25
Vegetable Waste		0	0.4000	0.30	0.00	0.0140	0.00	28.57	$95
Saw Dust		0	0.6000	0.61	0.00	0.0008	0.00	750.00	$20
Wood Chips	15	7,950	0.6000	0.88	4,197.60	0.0008	5.60	750.00	$20
Totals	45	21,720			8,379.47		285.62	29.34	

Mix Density (lbs/CY) = 483

Mix Unit Cost ($/CY) = $8.74

MIX #4

Ingredient	Qty. (CY)	Qty. (lbs.)	% Carbon	% D.M.	Carbon (lbs.)	% Nitrogen	Nitrogen (lbs.)	C:N Ratio	Cost ($/Ton)
Straw		0	0.4240	0.88	0.00	0.0123	0.00	34.47	$65
Chicken Manure	1.95	2,828	0.1870	0.88	465.29	0.0558	138.84	3.35	$25
Alfalfa	11.55	1,559	0.3290	0.85	436.04	0.0314	41.62	10.48	$165
Cow Manure	13.5	19,238	0.3820	0.21	1,543.23	0.0257	103.82	14.86	$22
Vegetable Waste	6.45	9,675	0.4000	0.30	1,161.00	0.0140	40.64	28.57	$95
Saw Dust	11.55	4,736	0.6000	0.61	1,733.19	0.0008	2.31	750.00	$20
Wood Chips		0	0.6000	0.88	0.00	0.0008	0.00	750.00	$20
Totals	45	38,035			5,338.76		327.23	16.32	

Mix Density (lbs/CY) = 845

Mix Unit Cost ($/CY) = $19.61

MIX #5

Ingredient	Qty. (CY)	Qty. (lbs.)	% Carbon	% D.M.	Carbon (lbs.)	% Nitrogen	Nitrogen (lbs.)	C:N Ratio	Cost ($/Ton)
Straw		0	0.4240	0.88	0.00	0.0123	0.00	34.47	$65
Chicken Manure		0	0.1870	0.88	0.00	0.0558	0.00	3.35	$25
Alfalfa	11.55	1,559	0.3290	0.85	436.04	0.0314	41.62	10.48	$165
Cow Manure		0	0.3820	0.21	0.00	0.0257	0.00	14.86	$22
Turkey Manure	15.45	12,097	0.4160	0.74	3,724.05	0.0260	232.75	16.00	$25
Vegetable Waste	6.45	9,675	0.4000	0.30	1,161.00	0.0140	40.64	28.57	$95
Saw Dust	11.55	4,736	0.6000	0.61	1,733.19	0.0008	2.31	750.00	$20
Wood Chips		0	0.6000	0.88	0.00	0.0008	0.00	750.00	$20
Totals	45	28,067			7,054.29		317.32	22.23	

Mix Density (lbs/CY) = 624

Mix Unit Cost ($/CY) = $17.48

Approved DCWS

Modified 8/14/97

NSWC CRANE

PILOT SCALE MIX RECIPIES

MIX #6

Ingredient	Qty. (CY)	Qty. (lbs.)	% Carbon	% D.M.	Carbon (lbs.)	% Nitrogen	Nitrogen (lbs.)	C:N Ratio	Cost ($/Ton)
Straw		0	0.4240	0.88	0.00	0.0123	0.00	34.47	$65
Chicken Manure		0	0.1870	0.88	0.00	0.0558	0.00	3.35	$25
Alfalfa	9	1,215	0.3290	0.85	339.77	0.0314	32.43	10.48	$165
Cow Manure		0	0.3820	0.21	0.00	0.0257	0.00	14.86	$22
Turkey Manure	15	11,745	0.4160	0.74	3,615.58	0.0260	225.97	16.00	$25
Vegetable Waste	9	13,500	0.4000	0.30	1,620.00	0.0140	56.70	28.57	$95
Saw Dust	6	2,460	0.6000	0.61	900.36	0.0008	1.20	750.00	$20
Wood Chips	6	3,180	0.6000	0.88	1,679.04	0.0008	2.24	750.00	$20
Totals	45	32,100							
	Mix Density (lbs/CY) =	713			8,154.76		318.54	25.60	
	Mix Unit Cost ($/CY) =	$20.99							

MIX #7a

Ingredient	Qty. (CY)	Qty. (lbs.)	% Carbon	% D.M.	Carbon (lbs.)	% Nitrogen	Nitrogen (lbs.)	C:N Ratio	Cost ($/Ton)
Straw	42.9	3,475	0.4240	0.88	1,296.55	0.0123	37.61	34.47	$65
Chicken Manure	2.1	3,045	0.1870	0.88	501.09	0.0558	149.52	3.35	$25
Alfalfa		0	0.3290	0.85	0.00	0.0314	0.00	10.48	$165
Cow Manure		0	0.3820	0.21	0.00	0.0257	0.00	14.86	$22
Vegetable Waste		0	0.4000	0.30	0.00	0.0140	0.00	28.57	$95
Saw Dust		0	0.6000	0.61	0.00	0.0008	0.00	750.00	$20
Wood Chips		0	0.6000	0.88	0.00	0.0008	0.00	750.00	$20
Totals	45	6,520							
	Mix Density (lbs/CY) =	145			1,797.64		187.13	9.61	
	Mix Unit Cost ($/CY) =	$3.36							

MIX #7b

Ingredient	Qty. (CY)	Qty. (lbs.)	% Carbon	% D.M.	Carbon (lbs.)	% Nitrogen	Nitrogen (lbs.)	C:N Ratio	Cost ($/Ton)
Straw	36	2,916	0.4240	0.88	1,088.02	0.0123	31.56	34.47	$65
Chicken Manure	9	13,050	0.1870	0.88	2,147.51	0.0558	640.81	3.35	$25
Alfalfa		0	0.3290	0.85	0.00	0.0314	0.00	10.48	$165
Cow Manure		0	0.3820	0.21	0.00	0.0257	0.00	14.86	$22
Vegetable Waste		0	0.4000	0.30	0.00	0.0140	0.00	28.57	$95
Saw Dust		0	0.6000	0.61	0.00	0.0008	0.00	750.00	$20
Wood Chips		0	0.6000	0.88	0.00	0.0008	0.00	750.00	$20
Totals	45	15,966							
	Mix Density (lbs/CY) =	355			3,235.53		672.37	4.81	
	Mix Unit Cost ($/CY) =	$5.73							

MIX #7c

Ingredient	Qty. (CY)	Qty. (lbs.)	% Carbon	% D.M.	Carbon (lbs.)	% Nitrogen	Nitrogen (lbs.)	C:N Ratio	Cost ($/Ton)
Straw	33	2,673	0.4240	0.88	997.35	0.0123	28.93	34.47	$65
Chicken Manure	6	8,700	0.1870	0.88	1,431.67	0.0558	427.20	3.35	$25
Alfalfa		0	0.3290	0.85	0.00	0.0314	0.00	10.48	$165
Cow Manure		0	0.3820	0.21	0.00	0.0257	0.00	14.86	$22
Vegetable Waste	6	9,000	0.4000	0.30	1,080.00	0.0140	37.80	28.57	$95
Saw Dust		0	0.6000	0.61	0.00	0.0008	0.00	750.00	$20
Wood Chips		0	0.6000	0.88	0.00	0.0008	0.00	750.00	$20
Totals	45	20,373							
	Mix Density (lbs/CY) =	453			3,509.02		493.94	7.10	
	Mix Unit Cost ($/CY) =	$13.85							

Approved CWS

FIGURE SOP 4-1

Modified 8/14/97

NSWC CRANE PILOT SCALE BATCH RECIPIES
(3 Batches Required Per Recipe)

MIX #6

Ingredient	Qty. (CY)	Qty. (lbs.)	% Carbon	% D.M.	Carbon (lbs.)	% Nitrogen	Nitrogen (lbs.)	C:N Ratio	Cost ($/Ton)
Straw		0	0.4240	0.88	0.00	0.0123	0.00	34.47	$65
Chicken Manure		0	0.1870	0.88	0.00	0.0558	0.00	3.35	$25
Alfalfa	3	405	0.3290	0.85	113.26	0.0314	10.81	10.48	$165
Cow Manure		0	0.3820	0.21	0.00	0.0257	0.00	14.86	$22
Turkey Manure	5	3,915	0.4160	0.74	1,205.19	0.0260	75.32	16.00	$25
Vegetable Waste	3	4,500	0.4000	0.30	540.00	0.0140	18.90	28.57	$95
Saw Dust	2	820	0.6000	0.61	300.12	0.0008	0.40	750.00	$20
Wood Chips	2	1,060	0.6000	0.88	559.68	0.0008	0.75	750.00	$20
Totals	15	10,700							
	Mix Density (lbs/CY) =	713			2,718.25		106.18	25.60	
	Mix Unit Cost ($/CY) =	$20.99							

MIX #7a

Ingredient	Qty. (CY)	Qty. (lbs.)	% Carbon	% D.M.	Carbon (lbs.)	% Nitrogen	Nitrogen (lbs.)	C:N Ratio	Cost ($/Ton)
Straw	14.3	1,158	0.4240	0.88	432.18	0.0123	12.54	34.47	$65
Chicken Manure	0.7	1,015	0.1870	0.88	167.03	0.0558	49.84	3.35	$25
Alfalfa		0	0.3290	0.85	0.00	0.0314	0.00	10.48	$165
Cow Manure		0	0.3820	0.21	0.00	0.0257	0.00	14.86	$22
Vegetable Waste		0	0.4000	0.30	0.00	0.0140	0.00	28.57	$95
Saw Dust		0	0.6000	0.61	0.00	0.0008	0.00	750.00	$20
Wood Chips		0	0.6000	0.88	0.00	0.0008	0.00	750.00	$20
Totals	15	2,173							
	Mix Density (lbs/CY) =	145			599.21		62.38	9.61	
	Mix Unit Cost ($/CY) =	$3.36							

MIX #7b

Ingredient	Qty. (CY)	Qty. (lbs.)	% Carbon	% D.M.	Carbon (lbs.)	% Nitrogen	Nitrogen (lbs.)	C:N Ratio	Cost ($/Ton)
Straw	12	972	0.4240	0.88	362.67	0.0123	10.52	34.47	$65
Chicken Manure	3	4,350	0.1870	0.88	715.84	0.0558	213.60	3.35	$25
Alfalfa		0	0.3290	0.85	0.00	0.0314	0.00	10.48	$165
Cow Manure		0	0.3820	0.21	0.00	0.0257	0.00	14.86	$22
Vegetable Waste		0	0.4000	0.30	0.00	0.0140	0.00	28.57	$95
Saw Dust		0	0.6000	0.61	0.00	0.0008	0.00	750.00	$20
Wood Chips		0	0.6000	0.88	0.00	0.0008	0.00	750.00	$20
Totals	15	5,322							
	Mix Density (lbs/CY) =	355			1,078.51		224.12	4.81	
	Mix Unit Cost ($/CY) =	$5.73							

MIX #7c

Ingredient	Qty. (CY)	Qty. (lbs.)	% Carbon	% D.M.	Carbon (lbs.)	% Nitrogen	Nitrogen (lbs.)	C:N Ratio	Cost ($/Ton)
Straw	11	891	0.4240	0.88	332.45	0.0123	9.64	34.47	$65
Chicken Manure	2	2,900	0.1870	0.88	477.22	0.0558	142.40	3.35	$25
Alfalfa		0	0.3290	0.85	0.00	0.0314	0.00	10.48	$165
Cow Manure		0	0.3820	0.21	0.00	0.0257	0.00	14.86	$22
Vegetable Waste	2	3,000	0.4000	0.30	360.00	0.0140	12.60	28.57	$95
Saw Dust		0	0.6000	0.61	0.00	0.0008	0.00	750.00	$20
Wood Chips		0	0.6000	0.88	0.00	0.0008	0.00	750.00	$20
Totals	15	6,791							
	Mix Density (lbs/CY) =	453			1,169.67		164.65	7.10	
	Mix Unit Cost ($/CY) =	$13.85							

Approved
Modified 8/14/97

NSWC CRANE PILOT SCALE BATCH RECIPIES

(3 Batches Required Per Recipe)

MIX #1

Ingredient	Qty. (CY)	Qty. (lbs.)	% Carbon	% D.M.	Carbon (lbs.)	% Nitrogen	Nitrogen (lbs.)	C:N Ratio	Cost ($/Ton)
Straw		0	0.4240	0.88	0.00	0.0123	0.00	34.47	$65
Chicken Manure		0	0.1870	0.88	0.00	0.0558	0.00	3.35	$25
Alfalfa	5	675	0.3290	0.85	188.76	0.0314	18.02	10.48	$165
Cow Manure		0	0.3820	0.21	0.00	0.0257	0.00	14.86	$22
POTW Waste	5	8,425	0.0006	0.01	0.06	0.0005	0.05	1.08	$1
Saw Dust	2.5	1,025	0.6000	0.61	375.15	0.0008	0.50	750.00	$20
Wood Chips	2.5	1,325	0.6000	0.88	699.60	0.0008	0.93	750.00	$20
Totals	15	11,450							
	Mix Density (lbs/CY) =	763			1,263.57		19.50	64.80	
	Mix Unit Cost ($/CY) =	$5.56							

MIX #2

Ingredient	Qty. (CY)	Qty. (lbs.)	% Carbon	% D.M.	Carbon (lbs.)	% Nitrogen	Nitrogen (lbs.)	C:N Ratio	Cost ($/Ton)
Straw		0	0.4240	0.88	0.00	0.0123	0.00	34.47	$65
Chicken Manure	7	10,150	0.1870	0.88	1,670.28	0.0558	498.41	3.35	$25
Alfalfa		0	0.3290	0.85	0.00	0.0314	0.00	10.48	$165
Cow Manure		0	0.3820	0.21	0.00	0.0257	0.00	14.86	$22
Vegetable Waste		0	0.4000	0.30	0.00	0.0140	0.00	28.57	$95
Saw Dust		0	0.6000	0.61	0.00	0.0008	0.00	750.00	$20
Wood Chips	8	4,240	0.6000	0.88	2,238.72	0.0008	2.98	750.00	$20
Totals	15	14,390							
	Mix Density (lbs/CY) =	959			3,909.00		501.39	7.80	
	Mix Unit Cost ($/CY) =	$11.29							

MIX #3

Ingredient	Qty. (CY)	Qty. (lbs.)	% Carbon	% D.M.	Carbon (lbs.)	% Nitrogen	Nitrogen (lbs.)	C:N Ratio	Cost ($/Ton)
Straw		0	0.4240	0.88	0.00	0.0123	0.00	34.47	$65
Chicken Manure		0	0.1870	0.88	0.00	0.0558	0.00	3.35	$25
Alfalfa	5	675	0.3290	0.85	188.76	0.0314	18.02	10.48	$165
Cow Manure		0	0.3820	0.21	0.00	0.0257	0.00	14.86	$22
Turkey Manure	5	3,915	0.4160	0.74	1,205.19	0.0260	75.32	16.00	$25
Vegetable Waste		0	0.4000	0.30	0.00	0.0140	0.00	28.57	$95
Saw Dust		0	0.6000	0.61	0.00	0.0008	0.00	750.00	$20
Wood Chips	5	2,650	0.6000	0.88	1,399.20	0.0008	1.87	750.00	$20
Totals	15	7,240							
	Mix Density (lbs/CY) =	483			2,793.16		95.21	29.34	
	Mix Unit Cost ($/CY) =	$8.74							

MIX #4

Ingredient	Qty. (CY)	Qty. (lbs.)	% Carbon	% D.M.	Carbon (lbs.)	% Nitrogen	Nitrogen (lbs.)	C:N Ratio	Cost ($/Ton)
Straw		0	0.4240	0.88	0.00	0.0123	0.00	34.47	$65
Chicken Manure	0.65	943	0.1870	0.88	155.10	0.0558	46.28	3.35	$25
Alfalfa	3.85	520	0.3290	0.85	145.35	0.0314	13.87	10.48	$165
Cow Manure	4.5	6,413	0.3820	0.21	514.41	0.0257	34.61	14.86	$22
Vegetable Waste	2.15	3,225	0.4000	0.30	387.00	0.0140	13.55	28.57	$95
Saw Dust	3.85	1,579	0.6000	0.61	577.73	0.0008	0.77	750.00	$20
Wood Chips		0	0.6000	0.88	0.00	0.0008	0.00	750.00	$20
Totals	15	12,678							
	Mix Density (lbs/CY) =	845			1,779.59		109.08	16.32	
	Mix Unit Cost ($/CY) =	$19.61							

MIX #5

Ingredient	Qty. (CY)	Qty. (lbs.)	% Carbon	% D.M.	Carbon (lbs.)	% Nitrogen	Nitrogen (lbs.)	C:N Ratio	Cost ($/Ton)
Straw		0	0.4240	0.88	0.00	0.0123	0.00	34.47	$65
Chicken Manure		0	0.1870	0.88	0.00	0.0558	0.00	3.35	$25
Alfalfa	3.85	520	0.3290	0.85	145.35	0.0314	13.87	10.48	$165
Cow Manure		0	0.3820	0.21	0.00	0.0257	0.00	14.86	$22
Turkey Manure	5.15	4,032	0.4160	0.74	1,241.35	0.0260	77.58	16.00	$25
Vegetable Waste	2.15	3,225	0.4000	0.30	387.00	0.0140	13.55	28.57	$95
Saw Dust	3.85	1,579	0.6000	0.61	577.73	0.0008	0.77	750.00	$20
Wood Chips		0	0.6000	0.88	0.00	0.0008	0.00	750.00	$20
Totals	15	9,356							
	Mix Density (lbs/CY) =	624			2,351.43		105.77	22.23	
	Mix Unit Cost ($/CY) =	$17.48							

Approved as Modified 8/14/97

1.0 PURPOSE

This procedure describes the methods which will be used to measure bacteria in windrowed soil.

2.0 ESTABLISH SAMPLING AND MONITORING LOCATIONS

Field SOP 1.0 describes the procedure to be followed for establishing the field measurement locations.

2.1 Establish Field Measurement

Each windrow shall be sampled at the four cross-sections from the central deep location. Each of these samples shall be evaluated for aerobic heterotrophic bacteria types and counts using the attached procedure. The microbial enumeration procedures for polynuclear aromatic hydrocarbons (PAH), volatile organic aromatic compounds (VOA), specific hydrocarbons and oil degraders will not be performed as they are not expected to be present in the soils used in the composting process. Only one sampling event shall occur per week to test for the bacteria. for the Pilot Scale Test.

3.0 Analysis Results

Data shall be charted on a weekly basis documenting the bacteria counts and types per windrow. An evaluation shall made on the bacteria effects on degradation rates.

Approved [illegible] CWS 8/14/97

APPENDIX F
SUPPLEMENT TO QAPP

TABLE OF CONTENTS

SECTION		PAGE
1.0	SCOPE AND OBJECTIVES	F-4
1.1	INTRODUCTION	F-4
1.2	PROCESS MONITORING TASKS AND OBJECTIVES	F-4
1.2.1	Process Monitoring Tasks	F-4
1.2.2	Data Quality Objectives for Process Monitoring	F-5
1.3	PROCESS MONITORING MEASUREMENT AND SAMPLE LOCATIONS AND FREQUENCY	F-6
2.0	QUALITY ASSURANCE OBJECTIVES FOR PROCESS MONITORING DATA	F-7
2.1	FIELD PRECISION OBJECTIVES	F-7
2.2	FIELD ACCURACY OBJECTIVES	F-7
2.3	FIELD COMPLETENESS OBJECTIVES	F-7
2.4	REPRESENTATIVENESS OF FIELD DATA	F-7
2.5	COMPARABILITY OF FIELD DATA	F-7
3.0	PROCESS MONITORING MEASUREMENT AND SAMPLING PROCEDURES	F-8
3.1	PROCESS MEASUREMENTS	F-8
3.2	QA/QC MEASUREMENTS AND SAMPLES	F-8
3.2.1	Field Duplicate Measurements	F-9
3.3	DECONTAMINATION PROCEDURES	F-9
3.4	FIELD METHOD AUDITS	F-10
4.0	CUSTODY PROCEDURES	F-11
4.1	FIELD CUSTODY PROCEDURES	F-11
4.1.1	Field Documentation	F-11
4.1.2	Measurement and Sample Identification	F-11
5.0	CALIBRATION PROCEDURES AND FREQUENCY	F-12
6.0	PROCESS MONITORING DATA REDUCTION, VALIDATION AND REPORTING	F-13
6.1	DATA REDUCTION	F-13
6.2	DATA ASSESSMENT AND CORRECTIVE ACTION	F-13
6.3	DATA VALIDATION	F-13
6.4	DATA REPORTING	F-14

Approved CWS 8/14/97

LIST OF TABLES

TABLE		PAGE
1-1	PROCESS MONITORING DATA COLLECTION TASKS	F-4
1-2	FIELD MEASUREMENT PARAMETERS AND ASSOCIATED MEASUREMENT AND ACCURACY RANGES	F-6
1-3	PROCESS MONITORING MEASUREMENT AND SAMPLING SCHEDULE	F-6
3-1	SUMMARY OF PROCESS MONITORING PROGRAM	F-8
6-1	DATA ACCEPTANCE CRITERIA AND SUGGESTED CORRECTIVE ACTION	F-13

Approved CWS 8/14/97

NSWC CRANE
WINDROW PROCESS DAILY LOG
MIX
DATE:

Age (days): 1	Ambient Conditions:	Probe Type: Demista		
Size (feet) :H L W	Relative Humidity: %	Reotemp		
Texture:	Temperature: C F	Time:	Start	Finish
Time Turned:	Wind Speed (mph):	Pre-Turn		
Moisture added (gal);	Wind Direction:	Post-Turn		

PRE-TURN MONITORING

Cross Section	Sample Location	Temp C 1' (A)	Temp C 3' or 2.5' *	Oxygen (%) 1' (A)	Oxygen (%) 3' or 2.5' *	Percent Saturation	Percent Moisture	pH
A	1							
	2							
	3							
B	1							
	2							
	3							
C	1							
	2							
	3							
D	1							
	2							
	3							
	Depth avg:	0	0	0	0	Avg:	Avg:	Avg.
	Mix avg:	0		0				0.00

POST-TURN MONITORING

Cross Section	Sample Location	Temp C 1' (A)	Temp C 3' or 2.5' *	Oxygen (%) 1' (A)	Oxygen (%) 3' or 2.5' *	Percent Saturation	Percent Moisture
A	1						
	2						
	3						
B	1						
	2						
	3						
C	1						
	2						
	3						
D	1						
	2						
	3						
	Depth avg:	0	0	0	0	Avg:	Avg:
	Mix avg:	0		0		0	0

Denied
CWS
8/14/97
7/24/

Comments:

Duplicates	Pre-Turn			Post-Turn		
	Cross Section:	Temp.:	Oxygen:	Cross Section:	Temp.:	Oxygen:
	Sample Location:			Sample Location:		

* 3' @ sample location 1.
or 2.5' at sample location 2 and 3.

APPENDIX H
QUALITY CONTROL PLAN

NSWC CRANE
PILOT SCALE OPERATIONAL ACTIVITIES

QUALITY CONTROL PLAN

CONTRACT #N62467-93-D-1106

REVISION ~~#1~~ 2
~~June 6, 1997~~

Prepared For:

SOUTHERN DIVISION
NAVAL FACILITIES ENGINEERING COMMAND
P.O. Box 190010
2155 Eagle Drive
North Charleston, South Carolina 29419-9010

Approved CWS 8/14/97

Prepared By:

MORRISON KNUDSEN CORPORATION
2420 Mall Drive
Corporate Square 1 - Suite 211
North Charleston, South Carolina 29406

TABLE OF CONTENTS

SECTION		PAGE
1.0	INTRODUCTION	1
2.0	QUALITY CONTROL PLAN	1
2.1	Definable Features of Work	4
2.2	Three Phases of Control	4
2.3	Quality Assurance Procedures	4
2.4	Data Quality Objectives	4
2.5	Preconstruction/Quality Control Meetings	5
3.0	QUALITY CONTROL PERSONNEL	6
3.1	Program Quality Control Manager (PQCM)	6
3.2	Site Quality Control Supervisor (SQCS)	6
3.3	Laboratory Quality Control Personnel	8
4.0	SUBMITTALS	9
4.1	MK PMO to Southern Division Submittals	10
4.2	Subcontractor Submittals	10
4.3	Site Submittals	10
5.0	INSPECTION SYSTEM	11
5.1	Three Phases of Control	11
5.1.1	Preparatory Inspection	11
5.1.2	Initial Inspection	12
5.1.3	Follow-Up Inspection and Surveillance	13
5.1.4	Final Inspections and Beneficial Occupancy Date	14
5.2	Documentation	14
5.3	Testing Plan and Log	16
5.4	Rework Items List	16
5.5	As-Built Records	16
5.6	Report Forms	17
6.0	TESTING PLAN AND LOG	17
7.0	REWORK PROCEDURES	18
8.0	QUALITY RECORDS	19

Approved CCS 8/14/97

TABLE OF CONTENTS

SECTION		PAGE
9.0	LABORATORY QUALIFICATION REQUIREMENTS	22
9.1	Analytical Chemistry Laboratories	22
9.2	Geotechnical and Material Testing Laboratories	23
9.2.1	Accredited Laboratories	23
9.2.2	Non-accredited Laboratories	24
9.3	Test Results	25
10.0	INSPECTION/PROGRESS SCHEDULE	25
11.0	REFERENCED PROCEDURES	26

FIGURES

FIGURE	PAGE
3-1: MK QUALITY INTERFACES RAC DISTRICT II	8
4-1: GENERAL SUBMITTALS FLOW	9
7-1: BASIC DEVIATION RESOLUTION	20

TABLES

TABLE	PAGE
1-1: Quality Program Elements	2
2-1: Typical Quality Records[11]	21

Approved CWS 8/14/97

NAVFAC Southern Division/ Morrison Knudsen Corporation	District II RAC

FIELD CLARIFICATION REQUEST (FCR)

Delivery Order No.: 4324-0009	**Subcontract No.:** 4324- NA	**FCR No.:** 4324-0009-FCR-PS002
Pilot Scale Operational Plan, Site Safety and Health Plan		Page 1 of 1

Reference Documents: Pilot Scale Operational Plan Appendix A; Site Safety and Health Plan, Rev. 5 dated June 6, 1997

Problem / Change Description:

Based on initial clean soil testing operations and results from the industrial hygeine and safety monitoring, the following changes are requested to the Pilot Scale Site Safety and Health Plan:

Attached marked pages A-5, A-6, A-9, A-11, A-12, A-13, A-18, A-19, A-20, A-22, A-27, A-28, A-29, A-36, A-37, A-38, A-39, A-40, A-41, A-42, A-43, A-44, A-45, A-46, A-51, A-52, A-54, A-67, A-70, A-71, A-77, A-82, Attachment A pages 2 of 9, 3 of 9, 4 of 9, 5 of 9, and 7 of 9. All lines affected are marked with an X in the margin.

Initiated by	Signature: Don Mitchell	Organization: Morrison Knudsen	Date: 06/26/97

Resolution:

If this FCR affects a subcontract, indicate CID number: N/A

Approval by MK PE	Signature: Don Mitchell	Date: 7/9/97	**Approval by ROICC/NTR or RPM**	Signature: Bart Parker	Date: 7/10/97
Approval by MK PjM	Signature: D Beall	Date: 7/10/97	Additional Reviews: By/Date RICHARD SPURGEON SSHO 7/8/97 R. L. Spurgeon Christine D. Freeman 7/10/97		
Approval by MK QC	Signature: Steven Cory	Date: 7/10/97			
Approval by MK REG SPT.	Signature: Steven Cory	Date: 7/10/97			

Regulator Approval/Notification Recommended:

☒ No ☐ approved w/ mod's as detailed on pages A-37, A-42, A-54 Carol Mitchell 8/14/97

A:FCRPS001.DOC

TABLE OF CONTENTS

Section		Page
17.0	CONFINED SPACES	A-61

LIST OF TABLES

TABLE		PAGE
A-1	Site Description and Contaminants	A-63
A-2	Potential Contaminants	A-64
A-3	Personnel Names and Numbers	A-68
A-4	Training Requirements	A-70
A-5	Selection of Personal Protective Equipment	A-71
A-6	Minimum Personal Protective Equipment Requirements by Task	A-72
A-7	Airborne Contaminant Response Criteria	A-73
A-8	Frequency of Physiological Monitoring for Fit and Acclimatized Workers	A-77
A-9	Monitoring and Sampling Requirements	A-78

LIST OF FIGURES

FIGURE		PAGE
A-1	Directions to the Nearest medical Facility	A-81
A-2	Safety Meeting Report	A-81
A-3	Pre-Entry Briefing Signature Sheet	A-82
DELETED ~~A-4~~	~~SSHO Daily Logbook Report~~	~~A-83~~
A-5	SSHP Weekly Inspection Checklist	A-84

ATTACHMENTS

ATTACHMENT		PAGE
A	ACTIVITY HAZARDS ANALYSIS (AHA)	A-1

Section 4.6 deleted changes #18

Ops Pln - Appendix A.

1.0
INTRODUCTION

This Task-Specific Site Safety and Health Plan (SSHP) describes safety and health requirements for interim cleanup measures at NSWC Crane, specifically for pilot scale operations conducted at Solid Waste Management Unit (SWMU) 12/14 and the Soils Bioremediation Facility. This SSHP is consistent with requirements of the Occupational Safety and Health Administration's (OSHA) Hazardous Waste Site Regulations; 29 CFR 1910.120 and 29 CFR 1926.65; and the U.S. Army Corps of Engineers (ACOE) *Safety and Health Requirements Manual* EM 385-1-1, dated September 1996. This SSHP is applicable to all personnel who enter work areas described in this SSHP and who are under the control of Morrison Knudsen Corporation (MK) or MK's Subcontractors.

1.1 WORK TASK SUMMARY

SWMU 12/14 Mine Fill A - Excavation, removal, and screening (includes rock washing) of approximately 200 cubic yards of explosives-residual contaminated soil, transport to the Bioremediation Facility, soil sampling, decontamination, and site restoration. Table A-1 provides a summary on site description and contaminants.

Soils Bioremediation Facility - Explosives contaminated soil will be received at this facility from SWMU 12/14. The contaminated soil will be processed by mixing with amendments and composting in covered structures. Support subsystems include decontamination facilities; storm water diversion and retention controls; and office and laboratory trailers. Amendments that will be mixed with the contaminated soils include alfalfa and animal manures, sawdust, wood chips, straw, and potato waste in various recipes. Amendments will be loaded into a grinder/mixer and will ~~either~~ be ~~stored or~~ discharged ~~directly~~ into the composting building for formation of the windrows (refer to the Pilot Scale Operational Plan).

1.2 CONTAMINANT CHARACTERISTICS

The potential contaminants are summarized below. Material Safety Data Sheets (MSDSs) or National Institute for Occupational Safety and Health (NIOSH) Pocket Guides will be used as a source of information for each contaminant. MSDS and NIOSH information for each of the potential contaminants, process chemicals, or other chemical substances encountered during the interim cleanup process will be organized into a separate binder, commonly called the "MSDS Binder." These binders will be available to all personnel, at anytime, and will be at appropriate on-site locations including the MK job-site trailer and NSWC Medical Building. Additional information concerning potential contaminants is presented in Table A-2. The potential contaminants contained in the soils to be received at the Soils Bioremediation Facility are summarized below.

2.0
SAFETY AND HEALTH HAZARDS SUMMARY

2.1 OVERVIEW

Hazards at this site include construction safety hazards associated with heavy equipment operation; soil excavation, potential contact with underground utilities and undermining of structural supports in Mine Fill A; inclined walking and working surfaces; traffic control including haul road layout; energy control (electrical and other kinetic energy sources) or other utility lines; site restoration including backfilling and compaction; eye/head/feet physical hazards; and heat and cold stress.

During pilot scale operations, the potential risk of acute exposure to the chemical contaminants listed in Table A-2 is considered low if the engineering controls, administrative controls, and personal protective equipment (PPE) requirements are strictly adhered to. The highest health risk chemical contaminant~~s~~ is ~~are TNT, HMX and RDX~~. AMMONIA X These chemicals can present health hazards in the form of airborne aerosols and by direct contact. Health hazards of metals as an airborne aerosol is considered low. Potential health hazards involving hydrocarbons and other inorganic gases and vapors are also considered low. Potential biological hazards may include airborne bioaerosols such as bacteria, molds, yeast, and fungi. The health hazard potential is considered moderate based on published results of air sampling campaigns at sewage sludge, leaf, and municipal waste composting facilities.

X per phone w/ Richard 8/15/97.

The Soils Bioremediation Facility processing equipment has been designed and will be operated to minimize dust releases, and safeguarded to prevent employee contact with rotating equipment.

2.2 ACTIVITY HAZARD ANALYSES

AHA have been prepared for each anticipated task in accordance with EM 385-1-1, September 1996 (ACOE, 1996). These hazard analyses are in the form of worksheets contained in Attachment A of this SSHP. Each site activity shall be reviewed by field supervision, namely the MK Site Safety and Health Officer (SSHO) and MK General Superintendent prior to starting work to determine if the prepared AHA adequately addresses the planned activity. If the prepared AHA requires revision or a new task is identified, additional hazard analysis will be prepared as needed. A new AHA worksheet shall be field prepared by the MK SSHO before the activity takes place. The Pre-Entry Briefing meeting is utilized to review the AHA and is conducted with all affected workers by the Superintendent.

chill factor must be considered. The first symptoms of hypothermia are uncontrolled shivering, the sensation of being cold, the heartbeat slows and sometimes becomes irregular; the pulse weakens and blood pressure changes. Severe shaking or rigid muscles caused by bursts of energy change the body chemistry. Vague or slowed speech occurs; memory lapses, incoherence and drowsiness then occur. As core temperature continues to drop, listlessness, confusion and little attempt to keep warm commences. Pain in the extremities is felt. As exhaustion sets in, the body's ability to contract blood vessels is diminished, and rapid loss of heat and cooling begins.

Frostbite can occur without hypothermia when the extremities do not receive sufficient heat from central body stores. This can occur because of inadequate circulation and/or insulation. This condition results in damage to and loss of tissue. The most vulnerable parts of the body are the nose, cheeks, ears, fingers and toes. Damage from frostbite can affect the outer layer of skin only, or it can include the tissue beneath the outer layer. Damage from frostbite can be serious; scarring, tissue death and amputation are all possibilities. The symptoms of frostbite include: 1) The skin changes color to white or grayish-yellow, progresses to reddish-violet and turns black as tissue dies; 2) Pain may be felt at first, but subsides; 3) Blisters may appear; 4) The affected part is cold and numb; and 5) The skin has a waxy appearance.

To prevent cold stress, proper clothing must be worn. It is important to preserve the air space between the body and the outer layer of clothing to retain body heat. Refer to Section 7.2.6 for more guidance on heat and cold stress management.

2.5.4 Excavations

Open excavations and trenches present a hazard from falling into the excavation and/or side wall collapse while personnel are near or inside the excavation. To minimize exposure risk, the excavation work site will be barricaded ~~with orange snow fence~~ and signs posted. Refer to MK Project Procedure PHSP 05.1 for specific excavation requirements. The deepest excavation on this project may approach slightly more than 3 feet. OSHA 1926.650 Subpart P - Excavations and Corps of Engineers requirements (EM 385-1-1, Section 25) for sloping or shoring are not anticipated as necessary. When excavations are completed near building sidewalls and foundations, an MK engineer will assess potential collapse scenarios and specify any control requirements (e.g. shoring).

Positive identification of underground utilities and services is required at least 24 hours prior to any excavation, trenching or penetrations. An Excavation and Trenching Permit application must be submitted at least seven days prior to any excavation activities. The MK Project Manager (PM) will be responsible for obtaining this permit through the NSWC Crane Public Works Department (PWD). Part of this permit process will include a UXO

survey by the NSWC representative. ~~Regardless of the size of the trench,~~ MK will have a designated competent person who will evaluate all excavations and trenches on a daily basis ~~regardless of whether personnel will enter.~~ Inspections shall be recorded in a log book and field inspection checklists.

already deleted in approved plan

2.5.5 Hazardous Energy Control (Lockout/Tagout)

Ground Fault Circuit Interrupters (GFCIs) will be installed on all portable electrical equipment and installations in accordance with EM 385-1-1 Section 11.C.05. All extension cords shall have GFCI protection and shall be inspected and determined to be free of cracks or frays.

Any system where the potential exists for unexpected energizing, start-up, or release of kinetic or stored energy during servicing and maintenance resulting in injury or damage shall be energy isolated in accordance with EM 385-1-1 Section 12, 29 CFR 1910.147, and PHSP 01.1. The MK Site Superintendent shall be responsible for verifying adequacy of all lockout/tagout installations and notifying all affected personnel. The MK Site Superintendent has the responsibility for implementing energy control measures. The PWD will provide energy control services on Mine Fill A utilities and process equipment if necessary. MK will provide their own energy control services on Bioremediation facility equipment and processes.

In addition, energy controls apply to motorized heavy equipment and process equipments and the following requirement applies. At a minimum, during service and maintenance of motorized equipment, the key shall be removed and in possession of the service or maintenance person and a "Do Not Operate" tag signed by this person shall be displayed near the start-up controls. Pre-operational checks and maintenance requirements on process equipments, including energy control will be incorporated into checklists.

2.5.6 Fire and Explosion

An Unexploded Ordnance Survey (UXO) will be required prior to subcontractor mobilization and may continue throughout the excavation process. The UXO Survey will be conducted by NSWC personnel.

No hot work or open flames will be allowed in the work area without a Hot Work Permit obtained through the MK SSHO. Hot Work Permitting will be coordinated through the base Fire Department. Flammable and combustible fuels for heavy equipment shall be stored and dispensed in accordance with NFPA 30, the Flammable and Combustible Liquids Code. ~~At least two 20 lb or equivalent "ABC" multi purpose fire extinguisher shall be maintained for fire response at the entrance to each Contamination Reduction Zone (CRZ).~~ Fire extinguishers will be located at the diesel fuel storage location and in each of the Composting Buildings. All mobile heavy equipment must be fitted with a minimum 5 lb "ABC" fire extinguisher. Any temporary trailers or structures must have fire

CWS

extinguishers installed in accordance with NFPA 10. Depending on the fire loading, in most cases a 5 lb "ABC" is sufficient in each office trailer. This extinguisher must be mounted at least four feet from the floor next to a egress door. The MK SSHO is responsible for completing monthly checks on the fire extinguishers and recording appropriately. Use of any tool that can be considered an ignition hazard where fire and explosion hazards may exist is strictly prohibited. ~~Portable power tools shall be explosion proof in accordance with NFPA 70B and 70E, Class 1, Division 1, Group D or otherwise approved for use in potentially explosive atmospheres.~~

2.5.7 General Motor Vehicle, Hand and Power Equipment Safety

The following traffic rules will apply to all motorized vehicles and equipment while on site:

- Equipment carrying waste shall always have the right-of-way within the Work Zones.
- The speed limit is 10 mph, or as posted. Exceeding the speed limit is cause for disciplinary action, including removal from the site.
- Personnel shall not ride equipment that has not been specifically designed for the transport of personnel.
- Seatbelts shall be worn at all times when operating any motorized equipment or vehicle.
- All motor vehicles and equipment including hand and power tools shall be subject to safety inspections by the MK SSHO. The MK SSHO reserves the right to reject any equipment. A "DO NOT USE" or "DEFECTIVE" tag will be placed on the equipment and documented in the MK SSHO Logbook. Corrective action will be pursued with the Superintendent.
- Daily safety checklists shall be completed by heavy equipment operators and delivered to the MK Site Project Office on a daily basis. The checklist is based on the equipment manufacturers recommended guidelines for daily checks.

2.5.8 Vehicular Traffic and Work-Site Control Hazards

Potential hazards from vehicular traffic around work areas including the Soils Bioremediation Facility will be controlled by using traffic control items such as traffic cones, flagging, barricades, and signs. Types and placement of traffic control items will be in accordance with EM 385-1-1, Section 8 and 29 CFR 1926.201 and 202. Workers required to work in active traffic ~~areas~~ PATHS or roadways will be required to wear high visibility reflective vests.

4.0
TRAINING REQUIREMENTS SUMMARY

This section summarizes training requirements for project personnel. A training requirements summary is provided as Table A-4.

4.1 HAZARDOUS WASTE OPERATIONS TRAINING

All personnel entering a contamination reduction zone or exclusion zone shall have completed the initial 40-Hour Hazardous Waste Operations Safety and Health Training and three days of supervised experience pursuant to 29 CFR 1910.120(e)(3). All personnel shall receive eight hours of refresher training annually, pursuant to 29 CFR 1910.120(e)(8), as necessary. All on-site supervisors and managers shall receive an additional eight hours of specialized training pursuant to 29 CFR 1910.120(e)(4).

4.2 SITE SPECIFIC TRAINING

All personnel shall receive site-specific safety and health training prior to entering the site or commencement of work. All site employees and subcontractors, including those working in the support zone, shall receive this training. The Job Supervisor(s) are responsible for identifying personnel requiring this training and coordinated with the MK SSHO regarding scheduling of this training. The MK SSHO or designated alternate will conduct the training. Site visitors shall receive site-specific training prior to entering an exclusion zone. ~~An abbreviated version of this training will be given to site visitors not entering an exclusion zone but whose business will be conducted unescorted in the near vicinity of the Work Zones.~~ The format and content will be left up to the discretion of the MK SSHO. This training will cover the SSHP, but not necessarily be limited to, the following topics:

- Names of site safety and health personnel.
- Safety and health hazards present on the site and anticipated during the work campaign.
- Hazard Communication.
- PPE requirements.
- Safe work practices including drum handling.
- Engineering controls.
- Medical surveillance requirements, including recognition or symptoms and signs which might indicate overexposure to hazards.
- Decontamination procedures.
- Emergency procedures.
- Spill containment plan.
- Confined Space Entry.

- Energy Control.
- All other requirements of this SSHP.

If permit required confined space designations are made, then personnel involved with confined space entry work shall be required to have certified documented training in confined space entry procedures in accordance with the requirements of 29 CFR 1910.146. Copies of certificates must be presented to the MK SSHO prior to commencing work. Confined space entry procedures shall be implemented by the MK SSHO in accordance with MK IH Procedure 9. An MK Confined Space Entry Permit shall be posted at each work site during permit confined space entry activities. The Base Fire Department shall be notified of the location of confined space entries and expected duration at least two hours in advance of entry by the MK SSHO.

4.3 RESPIRATORY PROTECTION TRAINING

All personnel required to use respiratory protection shall have certified training in respirator use, care and maintenance pursuant to 29 CFR 1926.103 and 29 CFR 1910.134. Each individual shall be medically qualified to wear a respiratory device and have documented evidence of successfully completing respiratory training and fit testing.

4.4 HAZARD COMMUNICATION TRAINING

All personnel shall complete hazard communication training pursuant to 29 CFR 1910.1200 and 29 CFR 1926.59 regarding all potentially hazardous chemicals to which they may be exposed. MSDSs and/or NIOSH Pocket Guides for the contaminants suspected to be in the various work sites will be placed in a site MSDS Right-To-Know Binder. Copies will be maintained at each work site or some location convenient for employees to review plus a copy will be kept at the MK Project Office. Hazard Communication training will be included as part of the Site-Specific Training required in Section 4.2. When new chemicals are brought onto the work site or new chemical contaminants are identified, an MSDS and/or NIOSH Pocket Guide will be added to the MSDS Right-To-Know Binder(s) with a corresponding review by the MK SSHO and Job Supervisor(s) and if necessary, training shall be conducted with affected individuals. The MK SSHO has overall responsibility for maintenance of the MSDS database. Job Supervisor(s) are responsible for reviewing the MSDS, identifying training needs for affected workers and transmitting a copy of the MSDS to the MK SSHO.

4.5 CPR/FIRST AID AND BLOOD BORNE PATHOGENS

At least one employee on each shift shall be qualified to administer First Aid and CPR. At ~~the~~ minimum, the MK SSHO shall be First Aid/CPR qualified. This person is also required to be trained to 29 CFR 1910.1030 (BLOOD BORNE Pathogens). ~~Trained First Aid and CPR personnel shall be identified by hard hat stickers or other means of identification~~.

~~4.6 DEPARTMENT OF TRANSPORTATION (DOT) HAZARDOUS MATERIALS TRAINING~~

~~All personnel required to classify, mark, select packaging, inspect, load and transport hazardous materials must be trained to 49 CFR 172 Subpart H. This includes personnel responsible for packaging of samples to be sent to off site laboratories for analysis. Also included are personnel responsible for completing a hazardous waste or hazardous material manifest and insuring the hazardous waste/material is properly prepared for off site shipment.~~ COVERED ELSEWHERE

Delete

~~4.7~~ 4.6 SAFETY MEETINGS

Safety meetings for all MK employees shall be conducted on a weekly basis. This is a group meeting intended to be a self assessment of safety performance and a chance to review any lessons learned as a group, plus an opportunity to introduce specialized training topics. The meeting shall be chaired by the MK General Superintendent with assistance by the MK SSHO. This safety meeting can also be used to describe any changes in the Site Specific Training described in Section 4.4. Safety Meetings are documented using Figure A-2 from this plan or equivalent.

~~4.8~~ 4.7 PLAN OF THE DAY (POD) MEETINGS

Plan Of The Day (POD) Meetings shall be held at the beginning of each shift to review the planned work of the day as well as any safety and quality concerns. The meeting is chaired by the MK General Superintendent or MK PM. The attendee's include Job Supervisor, the MK Quality Control representative, the MK SSHO and other selected personnel. The date, time, personnel attending and meeting minutes shall be documented in field log-books.

~~4.9~~ 4.8 PRE- AND POST-ENTRY BRIEFINGS (MEETING)

Pre-entry briefings shall be held for employees prior to their initiating any new or differing site activity in an exclusion zone and at such other times as necessary to ensure employees are knowledgeable of the work plan activity, the Activity Hazards Analysis (AHA), and that the plan and analyses are being followed. Pre Entry Briefs are the responsibility of the Job Supervisor. Attendance shall be documented using Figure A-3 from this Plan. ~~Feedback on the AHA worksheets is highly regarded and the MK SSHO should make every effort to validate there applicability.~~

4.9
4.10 next page

5.0
MEDICAL SURVEILLANCE PROGRAM REQUIREMENTS

5.1 SUMMARY

All project personnel who work within the exclusion zone for more than three days per month, or are required to use respiratory protection regardless of the time within the exclusion zone, will participate in a medical surveillance program in accordance with OSHA 1910.120 and 1926.65, Section 16 from the MK Safety and Health Program Description for Hazardous Waste Site Operations (MK employees only), and as described in this section.

The medical surveillance program consists of a baseline or initial examination, an annual medical examination, a termination examination, and episodic medical examinations as necessary. Termination exams ~~specify~~ specific to this job have been determined to not be necessary unless specific criteria is met as discussed in the MK Safety and Health Program for Hazardous Waste Site Operations, Section 16. ~~Note: if MK personnel require physicals or other medical surveillance in the field, the MK PM and MK SSHO shall establish a purchase order agreement with the selected medical facility and contact the Health and Safety Manager for a copy of a sample Client Profile for their use as the purchase order specification.~~

At a minimum, the content of the initial, annual and termination examinations shall consist of the following medical tests and procedures (or as determined by the examining physician):

- Medical and occupation history.
- Complete physical examination.
- Pulmonary function test (FVC and FEV_1).
- Complete blood count, generally SMAC-22 or 24 biochemical profile.
- Audiometry.
- Complete urinalysis.
- Resting electrocardiogram.
- Vision screen.
- Chest X-ray (PA) (at the direction of the examining physician).

An episodic examination will be required if any employee develops signs or symptoms related to the possible overexposure to hazardous substances or other health hazards, if the employee has been injured, or if the employee has been exposed above the permissible exposure limits or published exposure levels in an emergency. The scope of any episodic examination will be left to the discretion of the examining physician.

or other qualified personnel. Records of the response check, maintenance, and annual calibration will be maintained on-site.

Colorimetric indicator tubes (e.g., MSA tubes) for organic vapors shall be used at the MK SSHO's discretion whenever the PID instrument measures breathing zone concentrations of organic gases or vapors exceeding 5 parts per million (ppm) PID equivalents greater than background concentrations for time period greater than five minutes or as deemed necessary by the MK SSHO. Colorimetric tubes are used to further characterize the potential exposure. Generally, the frequency of sampling with indicator tubes is driven on the monitoring results of the PID for organic compounds. Based on volatile concentrations reported in the soil sampling results, VOC's are not expected to be a problem. ~~The MK SSHO will have available tubes for benzene, xylene, ethylbenzene, toluene, trichloroethane, and petroleum hydrocarbons.~~

Additional compounds that ~~will~~ MAY be measured using colorimetric indicator tubes include the following: hydrogen sulfide, carbon dioxide, carbon monoxide, AND ammonia, ~~nitrogen dioxide, nitrous fumes, and formaldehyde.~~ If levels are detected above action levels, an immediate assessment of job controls will be made, and appropriate modifications incorporated if necessary. See Section 7.2.6 on measurement location and frequency.

7.2.2 Airborne Dust

A direct-reading, real-time instrument capable of detecting airborne dust (MIE Miniram) will be used, based on visible observations of excessive dust. Readings will be taken at locations that reflect approximate concentrations of airborne dust in the breathing zone of project personnel. Results of the airborne dust monitoring will be documented. If necessary, the level of PPE used by personnel will be modified or engineering controls enhanced. The direct-reading, real-time monitoring equipment will be "response checked" according to the manufacturer's instructions before use each day, and calibrated by the manufacturer or other qualified personnel yearly. Records of the response check, maintenance, and annual calibration will be maintained on-site. When such monitoring is conducted and the results are greater than 10 mg/m^3 total dust concentrations, immediate steps will be taken to determine the cause and modify site operations.

7.2.3 Perimeter Monitoring

Perimeter monitoring to evaluate emissions of airborne dust in the Support Zone will be performed periodically during soil excavation, as warranted. When such monitoring is conducted and results are greater than 1.0 mg/m^3, immediate steps will be taken to determine the cause and modify site operations.

7.2.4 Noise Monitoring

Noise monitoring will be performed, as warranted, at the initiation of each task or operation to determine the sound levels associated with the particular task or operation. Sound levels will be determined at locations that best approximate the sound levels at the ear of potentially affected personnel. Noise monitoring equipment will be "response checked" according to the manufacturer's instructions prior to use each day, and calibrated by the manufacturer or other qualified personnel yearly. Records of the response check, maintenance, and annual calibration will be maintained on-site.

7.2.5 Heat Stress and Cold Stress Monitoring

When temperatures at the site are above 65°F, ~~the wet bulb globe temperature (WBGT) may be used to monitor the potential for heat stress.~~ Work/rest periods will be adjusted according to the guidelines stated in the current edition of *ACGIH Threshold Limit Values for Chemical Substances and Physical Agents.* When the clothing worn differs from the ACGIH standard ensemble such as in the case of workers wearing semipermeable or impermeable clothing, guidelines established in the NIOSH/OSHA/USCG/EPA, Occupational Safety and Health Guidance Manual for Hazardous Waste Site Activities, Section 8 should be consulted. The following is a summary from that document.

When employees are required to wear impermeable chemical protective clothing in temperatures exceeding 70°F, employees ~~shall~~ **monitor their pulse rate or** use the "buddy system" to monitor each other's pulse rate at the start of each rest period. ~~If the pulse rate exceeds 110 beats per minute, the next work period shall be shortened by one-third without shortening the rest period. The pulse rate shall be monitored again at the beginning of the next rest period and if the pulse rate exceeds 110 beats per minute, the work period shall again be shortened by one-third. No employee shall be permitted to continue working in PPE if his or her pulse rate exceeds 110 beats per minute continuously.~~ Table A-9 can be used to establish work/rest periods and the frequency of monitoring pulse rates.

Guidelines for the prevention of cold stress and cold stress TLVs shall follow the guidelines stated in EM-381-1-1 Section 06.J and the current edition of *ACGIH Threshold Limit Values for Chemical Substances and Physical Agents.* At air temperatures below 50°F, the air temperature and wind speed shall be monitored by the MK SSHO qualitative assessment of cold stress risk shall be made by comparing wind speed and actual temperature to the assigned equivalent chill temperature depicted on Table 2 in the Cold Stress section of the ACGIH booklet. Unless there are unusual or extenuating circumstances, cold injury to other than the hands, feet, and head is not likely to occur without the development of the initial signs of hypothermia. These symptoms are described in Section 2.5.3. The use of extra insulating clothing

and/or reduction of the exposure period are among the special precautions which should be considered.

Cold weather clothing requirements shall follow the guidance listed in Section 06.J.09 of EM-385-1-1. If work is performed continuously in the cold at an equivalent chill temperature or below 20 °F, heated warming shelters shall be made available nearby the work area and the workers encouraged to use these shelters at regular intervals. A cold weather work/warm-up regimen shall be established when outside ambient temperature is less than a -15 °F in accordance with Table 3 of the ACGIH booklet in the Cold Stress section.

7.2.6 Carbon Dioxide, Hydrogen Sulfide, and Other Chemical Monitoring

At the Bioremediation Facilities during active composting, real-time monitoring using colorimetric indicator tubes for carbon dioxide and hydrogen sulfide will be performed periodically by the MK SSHO in the buildings housing the windrows. If carbon dioxide levels exceed 4,000 ppm inside of the structure, the structure will be evacuated and action taken to vent the structure and maintain a level below 3,000 ppm. The ceiling for hydrogen sulfide is 10 ppm. Evacuation from the structure shall occur at 5 ppm, and action shall be taken to vent the structure and maintain a level below 5 ppm. ~~These compounds will be measured in the cab of the windrow turner machine during turning of the windrow approximately twice per week for the first two weeks. These same compounds will be measured inside of the compost buildings at two locations in the building once per day for the first week of active composting.~~ x cub

Also during active composting, real-time monitoring will be conducted periodically to determine if any detectable levels of methane, carbon monoxide, ~~nitrogen dioxide, nitrous fumes,~~ AND ammonia, ~~and formaldehyde~~ are present. Monitoring will be completed using colorimetric indicator tubes, except for methane where the multi-gas meter will be used. The multi-gas meter will also be used for hydrogen sulfide and carbon monoxide in addition to the colorimetric indicator tubes. ~~These compounds will be measured in the cab of the windrow turner machine during turning of the windrow approximately twice per week for the first two weeks. These same compounds will be measured inside of the compost buildings at two locations in the building once per day for the first week of active composting. If detectable levels are encountered, then full shift time integrated samples may be obtained to better quantify the occupational exposure level, and current controls (engineering, administrative and PPE) will be assessed to determine there adequacy.~~ If levels are detected above action levels, an immediate assessment of job controls will be made, and appropriate modifications incorporated where necessary. x x x x cub cub

8.0
GENERAL SAFETY RULES AND PROCEDURES

8.1 GENERAL

Operations shall be conducted in a safe manner consistent with the policies and procedures outlined in this SSHP. The number of personnel shall be restricted to the minimum necessary to complete the required work as an administrative control to limit personnel exposures to potential site chemical, physical and biological hazards. All project personnel assigned to this project are responsible for following this SSHP and for using safe work practices including wearing the PPE specified by the MK SSHO. Project personnel shall report hazards and unsafe conditions and practices to the MK SSHO. All federal, state and local occupational health and safety regulations must be complied with by project personnel. Violations of project procedures may include disciplinary measures up to and including termination.

8.2 RULES AND PROCEDURES

- MK shall have available ~~two 20-lb rated ABC multipurpose dry chemical fire extinguishers~~; first aid kit including CPR kit (Pocket Mask) and biohazards control kit; emergency eyewash; and spill response equipment (where necessary) available at each controlled work location. MK shall complete the Soil Excavation Maps and post it at each work site including emergency phone numbers. Work zone signs shall be posted in accordance with the requirements of Section 9.1.4 of this SSHP.

- ~~Avoid driving over dry grass that is higher than the ground clearance of the vehicle. Catalytic converters on the undercarriage of vehicles are sufficiently hot to ignite dry prairie grass. Never allow a vehicle with a warm undercarriage to sit in a stationary location over dry grass or other combustible materials.~~

- Do not eat, ~~drink~~, smoke, take medications, chew gum or tobacco, or put objects in mouth while in the exclusion zone and contamination reduction zone or when handling samples. DRINKING FLUIDS FOR HEAT STRESS IS ALLOWED IN THE CRZ AS ESTABLISHED BY THE SSHO

- After handling samples, thoroughly wash hands and, if necessary, face, before eating or putting anything in mouth (i.e., avoid hand-to-mouth contamination).

- At a minimum, wear ~~hard hats~~ FCR 6/25/97, safety glasses and ~~steel-toed~~ STURDY WORK boots when inside the work boundaries.

- Remain a safe distance from the excavation equipment when not involved in operation or monitoring activities.

- Do not under any circumstances enter or ride in or on any backhoe/excavator bucket, materials hoist or any other device not specifically designed for carrying human passengers.

- Remain aware of your own and other's positions with regard to rotating equipment and be extremely careful when assembling, lifting and carrying items that may cause pinch point injuries and collisions.

- Be alert to the symptoms of fatigue, heat stress and cold stress and their effect on the normal caution and judgment of personnel.

- ~~Use explosion proof sampling equipment and tools.~~

- Use ground fault circuit interrupters (GFCI) with all electrical tools and equipment.

- Stand clear of trenches during excavation. Always approach the excavation from upwind.

- Stand upwind, whenever possible, of excavations and other sites where the soil has been disturbed.

- Be alert to potentially changing exposure conditions as evidenced by perceptible odors, unusual appearance of excavated soils, oily sheen on water, or other evidence of possible contamination.

- Do not enter any excavation or trench greater than five feet in depth unless authorized by the MK SSHO.

- USE GOOD HOUSEKEEPING PRACTICES WITH REGARD TO TOOLS AND MATERIAL ~~Keep hand tools off the ground and centrally located on a plastic cover or area of no contamination~~ whenever possible to avoid tripping hazards and the spread of contamination.

- Use the buddy system at all times while working at the site in controlled work zones. No one is to work alone in the Exclusion Zone or Contamination Reduction Zone without permission from the MK SSHO and MK General Superintendent.

- Minimize truck tire disturbance of all stabilized sites and areas beyond the work area boundaries.

- Cease all work operations on the site at sunset unless the control zone is adequately illuminated ~~with artificial lighting.~~ X

- Job Supervisors shall attend the POD meeting prior to the start of the work and conduct pre- and post-entry briefs with all affected workers.

- Avoid direct contact with contaminated materials unless necessary for sample collection or required observation. PPE shall be worn at all times, as required.

- Remove disposable clothing and follow decontamination procedures.

- Always use an appropriate level of personal protection as assigned in this SSHP. Lesser levels of protection can result in otherwise preventable exposure.

- Maintain a high level of awareness of the limitations in mobility, dexterity and visual impairment inherent in the use of Level B and Level C PPE.

- Establish prearranged hand signals or other means of emergency communication when wearing respiratory equipment, since this equipment impairs speech communication.

- Wear hearing protection if you have to shout to communicate at a distance of three feet in steady-state (continuous) noise or when you expect loud impact noise from certain activities. The MK SSHO will assess potential noise exposure and provide recommendations on correct hearing protection devices.

9.0
WORK ZONES

Where a potential for worker exposure to potentially hazardous substances and physical hazards, work zones will be established and the flow of personnel and equipment will be controlled. The establishment of work zones will ensure that personnel are properly protected against hazards present in the work area, work activities and contamination are confined to the appropriate areas, and personnel can be located and evacuated in an emergency.

Prior to the commencement of remedial field activities, work zones shall be established by MK. These work zones are depicted on Soil Excavation Figures contained in Appendix E of the Operational Plan. In addition to the zones, data will be added in the field to show assembly points; ~~evacuation routes; location of first aid equipment, fire extinguisher and eye wash and spill containment equipment;~~ and emergency communications equipment. Posted with the Soil Excavation Map shall be the list of emergency phone numbers ~~and route map to hospital.~~

9.1 EXCLUSION ZONE (EZ)

The EZ is the area where hazardous substances are present or expected to occur, or health and safety hazards are present. Entry into this area is limited to personnel required to perform the work who are wearing the specified PPE and have attended a Pre-Entry Briefing. Everyone entering the EZ shall have completed the required health and safety training and will participate in the medical surveillance program as necessary. The boundary of the EZ will be determined for each activity and may change depending on activities and conditions.

An EZ will be established to encompass the contaminated area. ~~For this project, the EZ for each soil excavation area will consist of the immediate area of excavation extending outward for approximately 20 feet. The EZ will include the excavated soil classified as potentially contaminated that may be stockpiled.~~

The EZ will be clearly delineated with signs, barricade tape, fences, or other suitable means. Access control points will be established to regulate the flow of personnel and equipment in an out of the zone and to help verify that proper procedures for entry and exit are followed. PPE levels in the EZ are initially scoped as Level C, depending on the task listed in Table A-6. Decontamination will follow guidelines established in Section 10. Gross contamination will be removed in the EZ followed by additional decontamination in the CRZ. The MK SSHO will monitor activities in the EZ from his position in the CRZ. ~~The boundary line from the EZ to the CRZ will be based on the following criteria:~~

1. ~~Approximately 20 feet outward from contaminated work area, or as much as necessary, to include the heavy equipment operating in the zone and the temporary staging of any potentially contaminated soil.~~

2. ~~Perimeter air monitoring using the portable dust/aerosol monitor shows no increase in concentration above background. Background is considered the Support Zone (SZ) area.~~

9.2 CONTAMINATION REDUCTION ZONE (CRZ)

The CRZ is the transition area between the contaminated area, the EZ and the clean area, the SZ. While designed primarily to reduce the possibility of the support zone becoming contaminated or affected by EZ activities, the CRZ is also used for decontamination of personnel and equipment. No personnel or equipment will be allowed to exit the contamination reduction and exclusion zones without being properly decontaminated except in emergency situations. The immediate area around the EZ extending outward as much as necessary to accommodate the complete length of the longest piece of heavy equipment will be designated the CRZ. Used PPE will be removed and stored in properly marked ~~plastic lined 55-gallon drums or other containers for later disposal.~~ CONTAINERS

9.3 SUPPORT ZONE (SZ)

The SZ consists of all areas outside the exclusion and contamination reduction zones. These areas are used for all site activities which are not limited to the EZ or CRZ equipment and material storage, offices, parking, etc. The SZ will also serve as the staging area for all activities to be conducted.

9.4 WORK ZONE CONTROLS

Before site operations begin, the SZ MK site office shall be identified with signs identifying as such. MK shall post signs at entrances to the CRZ and EZ stating the following <u>or equivalent</u>:

HAZARDOUS AREA KEEP OUT
DANGER
AUTHORIZED PERSONNEL ONLY
PERSONAL PROTECTIVE EQUIPMENT IS REQUIRED IN THIS AREA

MK shall post signs at the entrance to the CRZ before operations begin, stating:

NO SMOKING, DRINKING OR EATING BEYOND THIS POINT

10.0 PERSONNEL AND EQUIPMENT DECONTAMINATION AND HYGIENE PROCEDURES

All personnel, clothing and equipment leaving an exclusion zone (contaminated or potentially contaminated area) shall be inspected and, if necessary, decontaminated to remove any potentially harmful substances that may have adhered to them. Some equipment/clothing may be disposed of rather than decontaminated. In this case, the used PPE and/or equipment (e.g. disposable sampling equipment) will be stored in properly marked, ~~plastic lined 55-gallon drums~~ CONTAINERS in the CRZ. A temporary decontamination station will be constructed at the excavation site and a permanent decontamination facility has been constructed at the Bioremediation Facility. This section gives guidelines regarding the decontamination procedures to be implemented. Final details will be described during the site-specific safety and health briefing prior to commencing field operations. X

10.1 EMERGENCY PERSONNEL DECONTAMINATION

Based on the type of emergency that is postulated, the following types of response actions are anticipated for personnel emergencies within the exclusion zone.

A. Critical Triage Condition (life threatening) - Emergency evacuation or extrication from the exclusion zone to contamination reduction zone where emergency medical treatment and stabilization will be attempted until arrival of first responding medical unit. Or, emergency medical treatment and stabilization will be completed in the exclusion zone till arrival of first responding medical unit. In either case, gross decontamination will be completed to the extent possible by removal PPE, wiping patient down to remove contamination and/or wrapping patient to prevent spread of contamination.

B. Marginal Triage Condition (non life threatening) - patient will be evacuated from exclusion zone and treated in the contamination reduction zone followed by decontamination and patient preparation for transport to emergency medical facility. Decontamination could occur first followed by medical treatment in selected scenarios.

10.2 PERSONNEL DECONTAMINATION

Decontamination (decon) stations will be established in the contamination reduction zone. The decon stations will consist of the following, as appropriate:

- Equipment drop ~~to include used respirator receptacle.~~ X
- ~~Portable High-Efficiency Particulate Air (HEPA) vacuum for vacuuming PPE before removal. Note: this requirement may be deleted pending results of airborne monitoring and engineering dust controls.~~ } X

- Boot wash station ~~and glove wash station with boot pick for cleaning initial mud cakes from boots~~ (a tub of water and detergent (Alconox®) with brushes for cleaning and another tub of water for rinsing.

- ~~Sampling equipment wash station (similar to boot wash station).~~

- Disposable clothing drop. All contaminated or potentially contaminated disposable clothing shall be placed into labeled 6-mil plastic bags within ~~a 55-gallon drum for disposal~~. APPROPRIATE CONTAINER

- Personal showers and washing facilities consisting of water, towels and soap. Street clothing shall be stored in lockers provided at the shower facility. Note: this facility is located at the Bioremediation Facility.

10.3 EQUIPMENT DECONTAMINATION

All equipment/tools used in the exclusion zone will be inspected for contamination prior to removal from the site. Any equipment/tools with visible contamination will be cleaned prior to removal from the site. A water and detergent solution will be used for highly contaminated equipment, followed by a high-pressure water rinse if necessary. All water used during decontamination will be contained for disposal. Construction and field equipment will be decontaminated at each temporary decontamination facility. If contamination can not be removed on-site, the affected surfaces of the equipment will be wrapped in plastic and transported to the Bioremediation Facility where more thorough decontamination can be performed prior to release.

10.4 WASHING FACILITIES

A hand and face washing facility shall be made available in each CRZ ~~consisting of water, towels and soap for personnel.~~

10.5 DECONTAMINATION WASH WATER

Equipment and personnel decontamination areas will be designed to allow for collection of all wash/rinse waters ~~into 55-gallon drums or a larger temporary storage container~~

10.6 SANITATION AND PERSONAL HYGIENE

Personnel exiting the CRZ are required to thoroughly wash their hands and face prior to eating, drinking, smoking, or using toilet facilities. Adequate toilet, hand washing and lunchroom facilities free of contaminants shall be designated by MK.

11.0
ON-SITE FIRST AID AND EQUIPMENT

11.1 FIRST-AID AND MEDICAL FACILITIES REQUIREMENTS

At a minimum, 16-unit first aid kits shall be maintained by MK in their office trailer and at each work site. The location of the first aid kit shall be communicated to project personnel as part of the site-specific and pre-entry brief training. Included with the first aid kit shall be a CPR Pocket Mask and a biohazards control kit (universal precautions and clean up kit). The MK SSHO can require upgrades to the first aid equipment requirements as deemed necessary for this job (e.g. insect repellants and sunscreen)

An emergency eyewash, ~~fire extinguisher~~ and spill control kit (if applicable) at each controlled work area. The Bioremediation Facilities will have stationary eyewash/drench equipment. The emergency phone number list and route map to medical facilities shall be posted at each office trailer and at each controlled work zone as part of the MK prepared Soil Excavation Figures.

11.2 REPORT OF FIRST AID CASES

All first aid cases, accidents and incidents shall be promptly reported to the MK SSHO. The MK SSHO shall immediately notify the Navy Technical Representative (NTR) or the Navy Resident Engineer in Charge of Construction (REICC) of all injuries even if preliminary information is available. The MK SSHO and MK PM shall follow the guidance presented in Program Procedure PHSP-04.1. The MK Charleston Project Management Office (PMO) should be notified shortly after notification to the Navy's designated authority. If an on-site official cannot be reached, the MK Charleston PMO still should be promptly notified at (803) 554-0100.

A written report of the injury must be provided to the ROICC or REICC and MK Charleston PMO within 24 hours of the incident via memo form. This report is to include as attachments:

a. Employer's First Report of Injury (Workman's Comp Insurance Form)
b. Supervisor's Accident Investigation Report (MK Form CAS 24/77)
c. Accident Data Report (MK Form 6783/91)
d. Any records provided by the Medical Service Provider such as 1) Hospital Emergency room Report, 2) Examining Physician's designation of work restriction, and 3) Examining Physician's Work Release.

12.0
EMERGENCY RESPONSE PLAN AND CONTINGENCY PROCEDURES

This section describes a contingency plan to be implemented in the event of injuries, illnesses, accidents, and fires. The contingency plan provides guidelines for the proper response to emergency situations, however the actual response will depend on the situation.

In the event of an emergency, the MK SSHO, MK General Superintendent and/or Job Supervisors will direct all personnel to take appropriate action which could include any or all of the following:

- Evacuate all personnel involved to a safe place of refuge.
- Notify emergency services using phone numbers identified in Table A-3.
- Initiate emergency response action.

12.1 PRE-EMERGENCY PLANNING

Prior to start-up of pilot scale, the MK Project Manager, MK General Superintendent and the MK SSHO shall review the Program Procedure PHSP 02.1 and check that all steps necessary to assure effective emergency response requirements and resources are established for this project.

In addition to the guidance provided in this document, all safety meetings and pre-entry briefs shall include emergency response preplanning specific to each task and work site as a topic area. This training will include:

- Assembly Points. If the work activity may result in a release of hazardous substances, more than one assembly point will be specified to ensure that at least one upwind assembly point is accessible. This also pertains to fires and sites subjected to adverse weather conditions. Information must be included on the Soil Excavation Maps.

- Emergency Response Coordinator. The MK SSHO, as the onsite emergency response coordinator, will contact the emergency response providers, account for individuals at the assembly point, and plan the appropriate response.

- ~~Evacuation Routes. Routes will be specified as needed. Information must be included on the Soil Excavation Maps.~~

- Means of Evacuation. The number of personnel that may be evacuated from the work site by various routes will be evaluated by the MK SSHO.

- Means of Communication. This will include the means of alerting personnel to an emergency at all points in the work site and should consider the sound screening potential of hearing protection, distance and noisy equipment when specifying the use of alarms, horns and sirens. The means of communication with emergency response providers will be considered. ~~Information must be included on the Soil Excavation Maps~~.

- Designation of a location for first aid services, fire extinguisher(s) and spill control equipment. ~~Information must be included on the Soil Excavation Maps.~~

- Procedures to be followed by employees who remain to manage critical operations to insure safe shutdown.

12.2 RESPONSIBILITIES

The following is a description of personnel roles, lines of authority, and the emergency response communication/notification responsibilities for site personnel.

12.2.1 *Project Personnel*

It is the responsibility of all project personnel to recognize conditions that have the potential for resulting in a personal injury or damage to property, and to report the condition immediately to their supervisor or the MK SSHO.

12.2.2 Project Manager

The Project Manager is responsible for assuring adherence to the administrative elements and implementation of the Emergency Response Plan (this section of the SSHP). He will evaluate the site's preparedness for emergency responses and identify special conditions which may require additional preparations. He will ensure that necessary equipment and facilities are provided to support this plan.

12.2.3 MK Certified Industrial Hygienist (CIH)

The CIH is responsible for preparing the Emergency Response Plan (this section of the SSHP). The CIH will develop and review the Emergency Response Plan, evacuation plans, and oversee implementation at the site. The CIH will ensure that supervisors and employees meet the training requirements of the plan and approve the equipment used in the plan. The CIH may designate duties on site to the MK SSHO. The CIH is the designated Health and Safety Manager based in Boise, ID.

12.2.4 MK Site Safety and Health Officer (SSHO)

The MK SSHO is responsible for directing response actions to emergency situations. He will coordinate with project management to ensure the availability of response equipment and supplies, and initiate drills. Emergency response plans will be evaluated over the course of the project by the MK SSHO to keep them up-to-date and to ensure that they are applicable and relevant to emergency response organizations.

12.3 EMERGENCY RECOGNITION AND PREVENTION

Site personnel shall be apprised of hazards and potential life-threatening emergency situations during site-specific training including the project kickoff site specific training, safety meetings and briefs. Means to control hazards and mitigate emergency situations will be addressed at that time.

12.4 SAFETY ZONES

Suitable assembly points will be established at the start of the project for each work site. These assembly points will provide a safe point of refuge for site personnel. Additional information will be provided in the site briefing concerning other hazards that may arise at the site. ~~Safety Zones or~~ assembly points must be included on the Soil Excavation Map.

12.5 SITE SECURITY AND CONTROL

At all times, site personnel working in an area in the near vicinity of an emergency situation shall be apprised of the emergency as soon as possible. Only authorized personnel shall be allowed into the emergency area. As necessary, the emergency area may be cordoned off and access restricted by MK and the Subcontractors.

12.6 EVACUATION ROUTES

Evacuation routes will be established based on scope of work, location of work and atmospheric conditions. ~~Evacuation routes shall be posted in various locations on the site if necessary and included on the Soil Excavation Map.~~ All site personnel will be made aware of evacuation procedures during site-specific training especially pre entry briefings. Topography, layout and prevailing wind conditions shall be considered in establishing evacuations routes and assembly points.

12.7 EMERGENCY DECONTAMINATION

In the event an employee is injured or becomes ill and requires hospital treatment, the extent of decontamination to be performed will be assessed based on severity of the injury or illness and time delay that decontamination may cause. If the employee has any signs of contamination, the ambulance and hospital staff will be notified of this and the nature

13.0
LOGS, REPORTS, AND RECORDKEEPING

13.1 SAFETY AND HEALTH LOGBOOK

The MK SSHO shall maintain a Project Safety and Health Logbook for the duration of work activities at the site. ~~Entries in the logbook shall be time sequenced. The entries must be written in ink and the bottom of each page must be signed. The logbook shall be hard bound. No pages will be removed from the log book. Corrections must be lined out and initialed.~~ The logbook will contain specific information recorded on a daily basis ~~utilizing the Form shown in Figure A-4.~~ The logbook will contain specific information on safety and health activities and to further describe or clarify information recorded on the Figure A-5, the SSHP Daily Logbook Report form.

~~A separate file folder shall be maintained for Figure A-4. Separate file folders shall be established for this SSHP; calibration data sheets if not attached to Figure A-4; safety and IH instrument serial numbers and shipping papers; field specific safety and health procedures; all safety and health related permits; and weekly safety inspections.~~ Records of training and site orientations; briefings including pre-entry briefs; Subcontractor prepared equipment inspection sheets, if applicable shall also be maintained in file folders by the MK SSHO. ~~In addition, the MK SSHO shall copy and file all receipts for MK equipment rentals and consumables upon delivery to the site and the inventory shall be verified as acceptable.~~

13.2 REPORTS

A weekly site safety and health inspection report shall be prepared by the MK SSHO. This report shall identify work activities, safety and health-related deficiencies, and corrective measures. As a minimum, the checklist shown in Figure A-5 shall be completed by the MK SSHO. All near miss incidents and incidents that result in property damage, personnel injuries or illness will be investigated and notification/reporting requirements shall be followed in accordance with PHSP 04.1.

13.3 FIELD MASTER COPY OF SSHP

The MK SSHO shall maintain a field master copy of this SSHP document to include all redlines ~~and the completed Soil Excavation Maps.~~ This copy shall be properly filed with project records at the completion of the project and sent to MK PMO office in Charleston.

13.4 RECORDKEEPING

The MK SSHO shall maintain records of all injuries and illnesses for MK employees only incidental to the work in accordance with 29 CFR 1904, including copies of the Worker's Compensation First Report of Injury. Accidents and Incidents data reporting requirements

shall be managed in accordance with Program Procedure PHSP-04.1 for both MK and Subcontractor personnel as stated in Section 11.3.

A record of all first aid treatments not otherwise recordable shall be maintained and furnished to MK or the Navy's designated authority upon request. Monitoring and sampling results shall be managed as stated in Section 7.5 of this plan.

13.5 SAFETY AND HEALTH PROJECT COMPLETION REPORT

The MK SSHO shall complete a safety and health project completion report at the conclusion of the field work associated with pilot scale. The purpose of the report is to a self assessment summarizing effectiveness of the safety and health program implemented in the field; lessons learned and suggestions for program improvement; accident and incidents; air monitoring and sampling results including ratings on instrument useability; and how well the original prepared AHA worksheets reflected field conditions. The report shall be directed to the MK SouthDiv Program Health and Safety Manager within ten working days after project completion.

~~The Cleveland safety and health representative, Frank J. Petrik, has responsibility for providing a summary write-up on all industrial hygiene time integrated sampling results. This summary shall be integrated into the project completion report.~~

15.0
COMMUNICATION PROCEDURES

15.1 RADIO COMMUNICATION, TELEPHONE, ALARMS AND DRILLS/EXERCISES

Refer to Section 12.10 of this Plan. Two-way radios in coordination with office telephones will be the primary choice of emergency communication. An emergency alarm, such as an air horn, shall be available if necessary at each major work site to warn personnel of an emergency. Personnel shall be trained on what actions they are to take if the alarm is sounded to include evacuation routes and assembly points. Drills and exercises shall be conducted to ensure that communication methods are adequate. ~~The MK SSHO will test the two-way communication system for confirmation of emergency communication using NSWC Crane protocols.~~

leave in must follow NSWC policy

Table A-3 Personnel Names and Telephone Numbers

Contact	Person or Agency	Telephone
Fire Department	NSWC Fire Department (Base)	3300 emergency (812) 854-1235
Ambulance Service	NSWC Ambulance (Base)	3300 emergency (812) 854-1100
Law Enforcement	NSWC Security (Base)	(812) 854-3318
Robert Hlavacek	MK Program Manager (MK PMO)	(803) 554-9367
Martin Wilson	MK Field Operations Manager	(803) 554-6003
~~Steve Downey~~ David Beall	MK Site Project Manager	~~Office~~: (812) ~~854-6941~~ 824-2574
~~Wally Metcalf /~~ Tom ~~Dougal~~ Dogal	MK Site Superintendent	~~Office:~~ (812) ~~854-6941~~ 824-6728 847.7690
Richard Spurgeon	MK Site Safety and Health Officer	~~Cellular:~~ (812) ~~639-8356~~ ~~Unit 0004 radio~~
Don Miller	MK Project Engineer / Science Manager	Office:(216) 523-2121
~~Randy Smith~~ Steve Cory	MK Site Quality Assurance/Quality Control Supervisor	Office: (812) ~~854-6941~~ 824-9819
William Piispanen	MK Health and Safety Program Manager	(208) 386-5930
Cmdr. Fred Smith	NSWC Crane PWD/Eng. Dept	(812) 854-1834
Capt. J.M. Carney	NSWC Base Commander	(812) 854-1210
Jim Hunsicker or ~~Tom~~ ~~Brent~~ Chris Freeman	NSWC Environmental Protection Services	(812) ~~854-6160~~ 8544423
Adrienne Townsel-Wilson	SOUTHNAVFACENGCOM	(803) 743-0582
Brent Robertson	ROICC(NTR)	(812) 854-3318
Lt. Dale Eads	NSWC E.O.D. (Base)	(812) 854-3456
Dale Groh	NSWC Safety Directory	(812) 854-3601
Poison Control Center	Poison Control Center	(800) 942-5969
National Response Center	National Response Center	(800) 424-8802
Regional USEPA	USEPA (Region 5) Emergency State of Indiana Emergency	(312) 353-2318 (317) 233-7745
Hospital	NSWC Base Medical Facility Head Nurse (Mary Muessig)	(812) 854-1220 (812) 854-4319

Table A-5 Selection of Personal Protective Equipment

PPE	Level D	Modified Level D	Level C	Level B
Coveralls or other approved working apparel	Yes	Yes	Yes	Yes
Chemical-resistant clothing (coveralls; hooded, one- or two-piece chemical-resistant coveralls)		Yes		
Chemical-resistant clothing ~~(coveralls; hooded one- or two-piece chemical splash suit; chemical-resistant hood and apron;~~ disposal chemical-resistant coveralls)			Yes	
Chemical-resistant clothing (coveralls and long-sleeved jacket; one- or two-piece chemical splash suit; disposal chemical-resistant one-piece suit)				Yes
Boots, leather or chemical resistant, ~~protective toe and steel-shank meeting~~ ANSI Z41.1 ~~(29 CFR 1926.28(a).~~	Yes			
Boots (inner), chemical resistant, ~~protective toe and shank meeting~~ ANSI Z41.1 ~~(29 CFR 1926.28(a)).~~		Yes	Yes	Yes
Boot covers (outer), chemical resistant (disposable)		Optional	Optional	Optional
Safety glasses or chemical splash goggles, meeting ANSI Z87.1-1979 for "Industrial Safety Glasses"	Yes	Yes	Yes	
Face shield	Optional	Optional	Optional	Optional
Gloves (cotton/leather)	Optional		OPTIONAL	
Gloves (inner), chemical resistant or liners		Optional	Yes	Yes
Gloves (outer), chemical resistant		Yes	OPTIONAL ~~Yes~~	Yes
Long underwear		Optional	Optional	Optional
~~Hardhat~~	~~Yes~~	~~Yes~~	~~Yes~~	~~Yes~~
Positive pressure, full-facepiece with nose cup, self-contained breathing apparatus (SCBA) or positive pressure, supplied-air respirator with escape SCBA (MSHA or NIOSH approved) (Note: escape SCBA may not be required)				Yes
Air-purifying respirator, half-face or full face with suitable cartridge (MSHA or NIOSH approved)			Yes	

Note: Optional requirements to be determined by the MK SSHO based on additional evaluation of site conditions and hazards analysis. Note: safety glasses not required when wearing full-face APR.

Table A-6
Minimum Personal Protective Equipment Requirements by Task

Site	Activity	PPE
Soil excavation at SWMU #12/14	1. Excavate, screen, and load soils for Composting 2. Site restoration 3. Decontamination and rock washing 4. Transporting contaminated soil (driving trucks)	1. ~~Level C,~~ MODIFIED LEVEL D modify based on air monitoring/sampling results. 2. Level D 3. ~~Level C~~ MODIFIED LEVEL D USE RAIN SUIT 4. Level D
SWMU Sampling	1. Obtain soil and/or groundwater samples	1. Modified Level D
Pilot Scale Start-Up and Operations of Bioremediation Facility	1. Offload and grind amendments 2. Load amendment blend in windrows 3. Offload contaminated soil into windrows 4. Turn and mix windrows 5. Monitor windrow parameters and field screening/confirmation sampling 6. Load and transport treated soils 7. Decontamination water management 8. Composting building housekeeping 9. Maintenance and Upkeep of Equipment	1. Modified Level D, ~~use approved Dust Mask.~~ 2. Modified Level D, ~~use approved Dust Mask.~~ 3. Level C, modify where necessary. 4. Level C, modify where necessary. 5. ~~Modified Level D, use approved Dust Mask.~~ Level C if working in building during windrow turning. MODIFY WHERE NECESSARY 6. Modified Level D, ~~use approved Dust Mask during loading.~~ Level D when clear of decon station. 7. Modified Level D. 8. Modified Level D, modify where necessary. 9. Level D, modify per task based on manufacturer's recommendation.

Level C respiratory protection includes half-mask air purifying respirator (APR) with HEPA cartridges and indirect venting safety goggles, or full-face APR with HEPA cartridges. Protective suits are standard Tyvek™ or equivalent for particulate protection. Either rubber boots or latex shoe covers can be used. Either rubber, vinyl coated or latex gloves (15-20 mils) can be used.

Modified Level D includes same protective clothing as Level C except for Dust Masks where specified should be 3M Brand 8710 Dust/Mist Respirator or equivalent where Dust Mask is specified. In some cases leather work gloves can be substituted for chemical protective gloves (e.g. handling amendments, off-loading amendments and building maintenance).

8/7/97 don't you need to modify this Dust Masks all deleted

Table A-9
Monitoring and Sampling Requirements

Site	Activity	Monitor						Sample		
		VOC	Dust	~~Oxygen and % LEL~~ R+O	Perimeter (Dust)	Noise	Heat Stress	VOC	Metals	Explosives
SWMU 12/14	1. Excavate, screen, and load soils for Composting	Y	Y	~~O~~ N	O	Y	O	N	Y	Y
Start-up and Operations of Bioremediation Facility	1. Offload and grind amendments.	N	Y	N	N	Y	O	N	N	N
	2. Load amendment blend in windrows.	N	Y	N	N	Y	O	N	N	N
	3. Offload contaminated soil into windrows.	Y	Y	~~Y~~	N	Y	O	N	N	N
	4. Turn and mix windrows.	Y	Y	Y	N	Y	O	Y	Y	Y

Y = Yes, O = Optional at discretion of SSHO, N = Not required

Notes:

1 = In addition to LEL and O_2, conduct periodic monitoring for other organics, CO_2, CO, Hydrogen Sulfide, ammonia, nitrogen dioxide and nitrous fumes, and formaldehyde levels inside of the Composting Facility using direct reading instrumentation and colorimetric indicator tubes as described in Section 7. Occupational exposure limits are presented in Table A-2.

2 = Bioaerosol sampling campaign parameters are defined and specified in Section 7. Suggested occupational exposure limits are presented in Table A-2.

Figure A-4 SSHO Daily Logbook Report

Page ___ of ___

Date _____ Report Number _____

Location(s) Work Activity and # Employees: _____

Weather: Wind speed _____ Wind direction _____
Temp. & Pressure _____ Precipitation _____
Amount sun _____

Monitoring conducted:

Location	Sampled for	Instrument used	Results	Sampled By/Time

DELETE

Levels of Protection: _____

Problems or Unusual Situations: _____

Correspondence: _____

Other Comments: _____

MK SSHO Printed Name: _____ Signature _____ Date _____

ACTIVITY HAZARD ANALYSIS (AHA)

Activity: Screener Operation		Analyzed By/Date: Frank J. Petrik 4/7/97	Reviewed By/Date:
1.0 Principal Steps	**Potential Hazards**	**Recommended Controls**	
1.1 Walk area down, establish work zone and material flow. Position and secure Screener at worksite.	1.1a. Struck by and struck against physical objects during initial job set-up.	1.1a. Preplan work layout (Soil Excavation Map completed and posted). Backup alarms on all motorized heavy equipment. Personnel shall maintain safe distance from equipment. ~~High visibility vests for workers.~~	
1.2 Excavated material loaded into Screener and screen. Screened material either stockpiled or loaded directly into haul truck.	1.2a. Struck by and struck against physical objects during feed operations. Caught in and Caught by hazards.	1.2a. Preplan work layout (Soil Excavation Map completed and posted). Screener leveled, locked and outriggers or stabilizers in place. All machine guards in place and verified prior to operation. Backup alarms on all motorized heavy equipment. ~~High visibility vests for workers.~~	
	1.2b. Airborne contaminated dust from Screener operation.	1.2b. Engineering Controls in place on Screener to control dust. Dust controls by wetting oF soil. Level C PPE.	
	1.2c. Noise and vibration.	1.2c. Sound Level Surveys to be conducted by MK SSHO.	
	1.2d. Fire/Explosion	1.2d. Diesel fueling operations conducted per manufacturers recommendation including daily inspection oF equipment.	
1.3 Equipment to be Used	**Inspection Requirements**	**Training Requirements**	
1.4 Screener. Heavy equipment for loading and hauling.	Daily, prior to use per manufacturer's recommendation in accordance with Operational Plan.	OSHA 1910.120 40-Hour Training, 3 day OJT, 8 hours Supervisory. 8 hour Refresher, Site Safety and Health Plan (Project Kickoff), POD, Pre and Post Entry Briefs, OSHA Hazard Communication, Respirator.	

X CWS 8/17

X

ACTIVITY HAZARD ANALYSIS (AHA)

Activity: Grinder/ Mixer Operation		Analyzed By/Date: Frank J. Petrik 4/7/97	Reviewed By/Date:
2.0 Principal Steps	**Potential Hazards**	**Recommended Controls**	
2.1 Position and secure Grinder/Mixer at worksite. Load amendments and discharge material into storage bins from side discharge conveyor or directly into windrows for development. Note: Grinder/Mixer will be PTO driven from tractor. Amendments will be loaded using center pivot loader with claw attachment.	2.1a. Struck by and struck against physical objects during operation, caught in and caught by hazards. 2.1b. Airborne nuisance biological aerosols; snakes, insects and rodents. 2.1c. Noise and Vibration 2.1d. Fire/Explosion	2.1a. Preplan work layout. Grinder/Mixer leveled, locked and outriggers or stabilizers in place if operated from stationary position. All machine guards in place and verified prior to operation. Backup alarms on all motorized heavy equipment. ~~High visibility vests for workers.~~ 2.1b. Inspect amendment stockpiles. Modified Level D PPE with Dust Mask. 2.1c. Sound Level Surveys conducted by MK SSHO. 2.1d. Diesel Fueling operations conducted per manufacturers recommendation including daily inspection of equipment.	
2.2 Equipment to be Used	**Inspection Requirements**	**Training Requirements**	
2.3 Grinder/Mixer, Farm Tractor, Loader	Daily, prior to use per manufacturer's recommendation.	OSHA 1910.120 40-Hour Training, 3 day OJT, 8 hours Supervisory. 8 hour Refresher, Site Safety and Health Plan (Project Kickoff), POD, Pre and Post Entry Briefs, OSHA Hazard Communication, Respirator and Operator Training.	

X
CWS
8/17/97

ACTIVITY HAZARD ANALYSIS (AHA)

Activity: Offload contaminated soils into windrows using end discharge Dump Truck and Self-Powered Swing Discharge Conveyor.	Analyzed By/Date: Frank J. Petrik 4/7/97	Reviewed By/Date:
3.0 Principal Steps	**Potential Hazards**	**Recommended Controls**
3.1 Position and secure discharge conveyor to Dump Truck and offload Dump Truck into conveyor for windrow development.	3.1a. Struck by and struck against physical objects during operation; caught in and caught by hazards.	3.1a. Preplan work layout. Insure conveyor is locked into position on Dump Truck. All machine guards in place and verified prior to operation. Backup alarms on all motorized heavy equipment. ~~High visibility vests for workers.~~
	3.1b. Airborne aerosols; chemical and biological.	3.1b. Level C PPE. Air monitoring and sampling campaign per Section 7 of SSHP.
	3.1c. Noise and vibration.	3.1c. Sound Level Surveys conducted by MK SSHO.
	3.1d. Fire/Explosion	3.1d. Diesel Fueling operations conducted per manufacturers recommendation including daily inspection of equipment.
3.2 Equipment to be Used	**Inspection Requirements**	**Training Requirements**
3.3 Dump Truck and Conveyor.	Daily, prior to use per manufacturer's recommendation.	OSHA 1910.120 40-Hour Training, 3 day OJT, 8 hours Supervisory. 8 hour Refresher, Site Safety and Health Plan (Project Kickoff), POD, Pre and Post Entry Briefs, OSHA Hazard Communication, Respirator, Operator Training.

X
CWS
8/17/9

ACTIVITY HAZARD ANALYSIS (AHA)

Activity: Operation of Windrow Machine, turn and mix Windrows		Analyzed By/Date: Frank J. Petrik 4/7/97	Reviewed By/Date:
4.0 Principal Steps	**Potential Hazards**	**Recommended Controls**	
4.1 Diesel powered windrow/composter turning machine is driven into composting building to mix and reform the windrow piles.	4.1a. Struck by and struck against physical objects during operation; caught in and caught by hazards.	4.1a. Preplan work layout. All machine guards in place and verified prior to operation. Cab doors closed and cab ventilation system operating. ~~High visibility vests for personnel in building when machine is operating.~~ Standby personnel inside oF structure need to maintain safe distance away from mixing flails.	
	4.1b. Airborne aerosols; chemical and biological.	4.1b. Level C PPE. Air monitoring and sampling campaign per Section 7 oF SSHP.	
	4.1c. Noise and vibration.	4.1c. Sound Level Surveys conducted by MK SSHO.	
	4.1d. Fire/Explosion	4.1d. Diesel Fueling operations conducted per manufacturers recommendation including daily inspection oF equipment.	
4.2 Equipment to be Used	**Inspection Requirements**	**Training Requirements**	
4.3 Windrow Machine	Daily, prior to use per manufacturer's recommendation.	OSHA 1910.120 40-Hour Training, 3 day OJT, 8 hours Supervisory. 8 hour Refresher, Site Safety and Health Plan (Project Kickoff), POD, Pre and Post Entry Briefs, OSHA Hazard Communication, Respirator, Operator Training.	

X
CWS 8/17/97

ACTIVITY HAZARD ANALYSIS (AHA)

Activity: Load and Transport Treated Soils	Analyzed By/Date: Frank J. Petrik 4/7/97	Reviewed By/Date:

6.0 Principal Steps	Potential Hazards	Recommended Controls
6.1. Loader will load treated soil into Dump Truck for transport to onsite landfill for use as daily cover.	6.1a. Struck by and struck against physical objects during operation.	6.1a. Preplan work layout). Haul roads to be assessed against EM 385-1-1, Section 21.I by MK onsite PE. Backup alarms on all motorized heavy equipment and headlights on (haul truck only). Emergency procedures and communications with haul trucks must be established. ~~High visibility vests for personnel working in near vicinity of heavy equipment.~~
	6.1.b Airborne nuisance dust.	6.1b. *Dust Controls required to include covered loads during transport.* Level D PPE expected, upgrade if necessary.
	6.1.c Noise and vibration.	6.1c. Sound Level Surveys conducted by MK SSHO.
	6.1.d Fire/Explosion	6.1d. Diesel Fueling operations conducted per manufacturers recommendation including daily inspection oF equipment.

6.2 Equipment to be Used	Inspection Requirements	Training Requirements
6.3 Loader and Dump Truck.	Daily, prior to use per manufacturer's recommendation.	OSHA 1910.120 40-Hour Training, 3 day OJT, 8 hours Supervisory. 8 hour Refresher, Site Safety and Health Plan (Project Kickoff), POD, Pre and Post Entry Briefs, OSHA Hazard Communication, Respirator.

X CWS 8/17/97

ORIGINAL

NAVFAC Southern Division/ Morrison Knudsen Corporation	District II RAC

FIELD CLARIFICATION REQUEST (FCR)

Delivery Order No.: 4324-0009	**Subcontract No.:** 4324- NA	**FCR No.:** 4324-0009-FCR-PS003
Pilot Scale Operational Plan		Page 1 of 1

Reference Documents: Pilot Scale Operational Plan, Rev. 5 dated June 6, 1997

Problem / Change Description:

Based on initial results of clean soil testing and operational experience the following changes to the Pilot Scale Operational Plan are requested:

Attached marked pages:

1). Pilot Scale Operational Plan test; 1-7, 5-3, 6-1, 6-2, 6-7, 6-8, 6-11, 6-12, 6-13, 6-14, 6-15, 6-18 (Figure 6-4), 7-2, 7-3, 7-4, 8-1, 8-2, 8-4, 8-5, 8-7, 8-9, 9-1, 9-2, 11-1, 14-1, 14-2, 15-1, 15-2, and 15-3. approved w/ mods. cws

2). Appendix D

SOP 1.0; 6, 7, 8, 9, 10, 11, 12, 13, and 14 of 14. approved w/ mods cws

SOP 2.0; 4, 5, and 8 of 8. approved w/ mods cws

SOP 4.0; 2, 3, and 4 of 4. approved cws

SOP 8.0; 1, 3, and 4 of 4. approved w/ mods cws

3). Appendix G; Added "Laboratory Moisture Data Form" sheets 1 & 2. approved cws

Initiated by	Signature: Don Mitchell	Organization: Morrison Knudsen	Date: 07/18/97

Resolution:

If this FCR affects a subcontract, indicate CID number: N/A

Approval by MK PE	Signature: Don Mitchell	Date: 7/18/97	**Approval by ROICC/NTR or RPM**	Signature: [illegible]	Date 7/22/97
Approval by MK PjM	Signature: D Beall	Date: 7/22/97	Additional Reviews: By/Date Christine D. Freeman NSWC Crane EPD 8/20/97		
Approval by MK QC	Signature: Steven Cory	Date: 7/20/97			
Approval by MK REG SPT.	Signature: Steven Cory	Date: 7/20/97			

Regulator Approval/Notification Recommended: Yes ☒ No ☐ Approved w/ mods cws 8/14/97

A:FCRPS001.DOC

Laboratory Moisture Data Form Definitions

T_1	~~Tare weight of weigh boat.~~
G_1	Gross weight of sample and weigh boat.
W_1	Net weight of sample. ($G_1 - T_1$)
GS_1	Gross weight of saturated sample and weigh boat.
S_1	Saturated weight of sample. ($GS_1 - T_1$)
GD_1	Gross dry weight.
D_1	Dry weight of sample. ($GD_1 - T_1$)
M_{W1}	Mass of water in original sample. ($W_1 - D_1$)
M_{S1}	Mass of water at saturation. ($S_1 - D_1$)
PM	Percent moisture of original sample. ([M_{W1}/W_1] x 100)
PMS	Percent moisture at saturation. ([M_{S1}/S_1] x 100)
PS	Percent saturation. ([PM/PMS] x 100)
PWHC	Percent water holding capacity. ([M_{W1}/M_{S1}] x 100)

Post-it® Fax Note 7671	Date 08/15/97	# of pages ▶ 1
To Carol Witt-Smith	From Steven Cory	
Co./Dept. US. EPA	Co. HK Crane	
Phone # 312-886-6196	Phone # 812-854-6941	
Fax #	Fax # 812-854-6944	

I've worked some of these backwords also.

$$PWHC = \frac{(G_1 - GD_1)}{(GS_1 - GD_1)}$$

$$PS = \frac{M_{W1}/W_1}{M_{S1}/S_1} \times 100$$

$$\# \quad PS = \frac{(W_1 - D_1)/(G_1 - T_1)}{(S_1 - D_1)/(GS_1 - T_1)}$$

add to file

Sep 1,0

TABLE 1-2 PROCESS GOALS	
Process Parameter	Operating Goal
Temperature	25 to 60 °C
Moisture	40 to 60 % (MWHC)[1]
Oxygen	5 to 20 %
[1] Denotes Maximum Water Holding Capacity	

If Contractor personnel and equipment are available during the Pilot Scale Operation, thermophilic bacteria testing shall be performed. The procedure is described in Appendix D, Field SOP 12.0 of this plan. If personnel and equipment are not available in a timely manner, or additional funding is not available, this test will be delayed until the full scale operation instead.

Standard Operating Procedure.

1.3 BACKGROUND

Mine Fill A Soil. Mine Fill A is located in the west-central portion of NSWC situated along Highway H-17 as shown in Figure 1-1. Mine Fill A consists of 29 buildings which have been used to assemble mines, depth charges, rocket heads, aerial bombs, and projectiles. Currently, Mine Fill A is used to produce 2,000-pound aerial bombs. Demilitarization activities also take place in this area. The major sources of contamination were wash down operations and the exhaust ventilation system.

Soil contaminants include TNT, RDX, and HMX. Concentrations of individual constituents in the soil ranged from nondetect to 15,300 mg/kg (RDX). TNT and HMX were reported as high as 3,790 mg/kg and 1,340 mg/kg respectively. Soil samples were collected in 1985 around Buildings 153 and 158 with the highest concentrations of contaminants detected near Building 153 (Haliburton, 1992). The sample locations are depicted in Figure 1-2 with the analytical results shown in Table 1-3. Other sampling events indicated contaminants of concern in operational waste waters which are presently collected and pretreated prior to discharge to the site wastewater treatment system.

Approved CWS 8/14/97

FCR PS003

wash is located on the east side of the truck wash to allow personnel to cleanse their boots prior to moving to the trailers. All decontamination fluids collected in the sump will be containerized and used for initial compost moisture adjustment or sampled for disposal requirements. The sanitary sewer line from the toilet room is routed to a pump/lift station in the office/laboratory area.

The personnel decontamination area consists of a shower/locker room trailer with change room area, lockers, lavatory, toilets and showers. ~~The northern end of the trailer serves as a lunch/conference room~~. The sanitary sewer line is routed to the pump/lift station in the office/laboratory area.

5.5 OFFICE AND LABORATORY TRAILER AREA

The office and on-site laboratory trailers are located north of the compost building area as shown on drawing G-100 in Appendix C. They are provided with a compacted limestone parking area with parking logs for 24 vehicle capacity. Sanitary sewer service is provided by way of a grinder pump/lift station as specified in the technical specifications and drawings. The existing roadside drainage swales are regraded to obtain proper drainage.

The on-site laboratory trailer contains the necessary equipment and supplies to support the process monitoring requirements as described in Section 8.0.

5.6 STORM WATER DIVERSION AND RETENTION CONTROLS

The facility utilizes both the existing topography and site drainage controls to control storm water run-off and run-on as shown on drawing G-100 in Appendix C. Two lined storm water retention basins sized to store rainfall from a 10-year, 24-hour storm are constructed inside the Bioremediation Facility. **The discharge pipes for both ponds are controlled with a locking device.** They allow for controlled on-site storm water storage/retention and off-site storm water discharge. Water collected in the retention basin will be sampled following a storm to determine whether the water meets off-site discharge requirements. Water not meeting off-site discharge requirements will either be recycled in the soil treatment area for initial compost moisture adjustment or transported to one of the water treatment facilities located at Mine Fill A and Rockeye. Enough retention capacity will be maintained to allow for unexpected rainfall events. Evaporation will be the preferred method of decreasing retention pond volumes, but analyses of retained water shall be kept current so that water may be discharged when needed. An NPDES discharge permit modification (NSWC, 1997) has been obtained for discharge to the local drainage swales and discharge into the water treatment facilities.

Approved CWS 8/14/97

FCR PS003

6.0
PILOT SCALE OPERATION

Pilot scale tests shall be performed prior to full scale operations, which is dependant upon successful pilot scale test results. It is planned that the pilot-scale tests will examine variations in compost mix by using ~~eight~~ **seven** separate, short windrows of approximately 60 cubic yards each (20 to 25 feet long). One pilot scale test mix design is based on the final results of the bench scale studies. Other amendment mixes will be partially derived from previous successful operations of composting explosive contaminated soil. **The U.S.Navy and the U.S. EPA will meet after the clean soil portion of the test is complete and decide on the final selection of mixes, based on the clean soil results, that will be used in the contaminated soil portion of the test.** ~~One pilot scale test mix design is based on the final results of the bench scale studies. Other amendment mixes will be partially derived from previous successful operations of composting explosive contaminated soil.~~

X

The pilot scale test treating explosive contaminated soils shall last 60 days. If a pile meets the performance goals, the U.S. Navy, in coordination with the U.S. EPA, may decide to end the treatment process sooner for that particular successful pile. Prior to pilot scale testing with explosives contaminated soil, all operations and mix designs will first be tested using clean soil from the on-site borrow source **for a 30 day test period**. All activities will be performed simulating a contaminated soil operation with the exception of the laboratory analysis and some of the excavation site activities. In addition to testing the basic batch design parameters and scale-up factors, the pilot scale test will allow operations to field-check many of the procedures presented in this Operational Plan prior to any full scale operations. The pilot test will be used to check material handling methods, windrow formation, and other operating procedures, in preparation, for the full scale operation. The proposed site-specific process goals as well as the NCP treatment efficiency goals are discussed in Section 1.2 of this plan. If the pilot scale tests fail and no mix meets the performance goals, the U.S. EPA Region 5 **RCRA Project** Coordinator shall be notified and new bench scale testing will be required.

The Bioremediation Facility operation process flows are illustrated on drawings 4324-0009-01-A, -B, and -C in Appendix C. Drawing 01-A illustrates the main composting processes while drawings 01-B and 01-C illustrate wastewater disposition and excavation site processes, respectively.

The pilot scale composting operation consists of eight major steps to be performed for each windrow. The sequence of steps is listed below and is described in detail in the following subsections.

1. Receive and store amendments.
2. Load amendments into grinder/mixer.
3. Load amendment blend into windrow.

Denied doesn't need to be changed. 8/14/

FCRPS003

4. Excavate, screen, and transport soil to Biofacility.

5. Load soil received from excavation into windrow.

6. Add moisture (if necessary) and turn/mix windrow.

7. Continue daily turning and monitoring of parameters until treatment goals are met.

8. Unload windrow and transport soil/compost to the interim storage building at the Bioremediation Facility.

6.1 RECIPE SELECTION

The mixes for use in the pilot-scale testing are made up of 25 percent soil and a combination of amendments consisting of cow manure, chicken manure, **turkey manure,** POTW sludge, alfalfa, and potato sludge, and bulking materials consisting of straw, ~~corn stalks~~, sawdust, and wood chips. **The final recipe selection is based on results from the Dewar Testing.** Recipe percentages are specified by volume and are listed in Table 6-1 **and Table 6-1a**.

The amendment/soil quantities will vary depending on the recipe; however, the volume ratios of soil to amendments will be maintained. ~~Recipe #6 simulates the Army Engineering Waterways Experiment Station **WES** bench scale mix of 20% soil, 40% alfalfa, and 40% cattle manure, except adjusted to a 25% soil loading. The WES bench scale cattle manure contained 50% straw bedding and 50% pure manure; therefore, the total of recipe #6 cow manure and straw is equivalent to the adjusted volume of 37.5 %. Recipe #8 simulates the Umatilla Depot Activity (UMDA) composting mix of 30% soil, 18% sawdust, 18% alfalfa, 21% cattle manure, 3% chicken manure and 10% potato waste, except adjusted to a 25% soil loading.~~ Final **Mix 1 ~~(shown above)~~ is the same as Dewar Recipe Mix 3 (refer to the end of Section 1 of this plan). Final Mix 2 ~~(shown above)~~ is the same as Dewar Recipe Mix 4. Final Mix 3 ~~(shown above)~~ is the same as Dewar Recipe Mix 9. Final Mix 4 ~~(shown above)~~ is the same as Dewar Recipe Mix 10, which simulates the successful recipe from the Umatilla Army Depot (UMAD) pilot and full scale test results. Final Mix 5 ~~(shown above)~~ is the same as Final Mix 4 accept the type of manure is changed, in order to see if turkey performs better than the cow and chicken mix. Final Mix 6 ~~(shown above)~~ is similar to Final Mix 5, but the ratio of alfalfa is reduced and the ratio of potato waste is increased to try and see if cost savings of the amendment types will affect the performance or not, also the sawdust is cut in half and wood chips added to add more aeration potential and reduce cost. These final mixes were selected in coordination of both the U.S. Navy and the U.S. EPA. The resulting disposal of "treated soil" from the Final Mix 1 will need to be coordinated between the U.S. Navy, the U.S. EPA, and the IDEM, since the POTW sludge is currently being land treated on-site through a State approved permit.**

approved CWS 8/1/97

FCRPS003

configuration, the Exclusion Zone (EZ), Contamination Reduction Zone (CRZ), Support Zone (SZ), soil screener location, stockpile area, etc. shall be established in the field and clearly identified as described in the Soils Excavation Plan (Appendix E).

6.2.1 Soil Excavation

Soil excavation will begin at SWMU #12/14, Mine Fill A, and be performed by a backhoe/loader and a steer skid loader (Bobcat) as described in the Soils Excavation Plan in Appendix E. The areas of excavation are depicted in Figure 6-1, near Buildings 153 and 158. Previous analytical results indicate high levels of TNT and RDX near the vehicle turnaround area north of Building 153 as discussed in Section 1.3 of this plan. A second area west of Building 158 has been identified as an additional contaminated soil source to insure excavation of up to 200 cubic yards of soil for the pilot scale operation. Analytical results show elevated levels of TNT and RDX in the area west of Building 158. Additional details are provided in Appendix B, Photographs, and Appendix E, Soils Excavation Plan drawings. In areas of shallow bedrock, excavation will stop upon bedrock contact.

Areas under excavation will be identified and barricaded for personnel protection as described in the SSHP (Appendix A). **Upon completion of each day's excavation, the** ~~The~~ area will be sampled and backfilled to avoid leaving open excavations, during periods of predicted precipitation. During daily operations, open excavations will be covered during periods of precipitation to prevent contact waters from forming. The areas of excavation will be identified based on analytical results from explosives testing, as described in Section 9.3.

6.2.2 Soil Screening

Contaminated soil will be screened at the excavation site to remove oversized material (1½" or larger) from the soil prior to transport to the Bioremediation Facility for pilot scale composting. The excavated soil will be loaded into the soil screening equipment using the backhoe/loader. The screening will be performed using a screen with a minimum 50 ton/hr capacity. The screen will be a standard design, portable, road legal for towing, self-powered, and will have a feed hopper with grizzly bars, fines stacking conveyor and a reject (oversized material) discharge conveyor. A step by step procedure for soil screening is provided in SOP 7.0 in Appendix D.

After screening, the fines shall be dropped from the fines stacking conveyor into a lined stockpile area, or directly into a truck bed for transport to the Bioremediation Facility in covered live-bottom semi-tractor trailers. Stockpiled material (coarse fractions) will be placed on a lined and bermed area and will be covered during periods of precipitation.

The oversized material that is screened out shall be separated, i.e., rocks, wood waste, and soil clods. The soil clods shall be spread out within the EZ in a four to six inch thick layer, on a planned excavation area which is lined and bermed, and allowed to dry sufficiently prior to pulverizing by the excavating equipment as described in the Soils Excavation Plan in Appendix E. The soil shall then be cycled through the screener again.

Approved 8/14/97 CO

FCR 5003

Wood wastes, such as tree roots, lumber pieces etc., will be stockpiled in a covered, lined, and bermed area for use as a bulking material for future operations. The rocks will be rinsed on the decontamination pad and used as natural fill material. Visual examination and rinse water samples, tested for explosives using laboratory analysis, will be used for verification of rock decontamination. The rinse water will be collected and transported to the Bioremediation Facility for use as process water during initial compost windrow formation. Should other materials be found during the excavation activities, the Contractor shall notify the U.S. Navy for disposition. All excavation, truck and rock decontamination, stockpiling and sorting will be performed in approved areas as described in the Soils Excavation Plan in Appendix E.

Post-excavation soil samples will be collected and their locations recorded. This sampling is further described in Section 4.5 of the Pilot Scale Biofacility QAPP.

The transport route may vary pending NSWC Crane operations during the periods of soil transport. However, the following transportation route to the Bioremediation Facility and Figure 6-2 should be utilized for the Mine Fill A excavation activities.

> The vehicles will exit the Mine Fill A facility by turning left onto Highway 45 (H-45). The speed limit is ~~35~~ 45 MPH at this location. Travel south on H-45 for approximately 4½ miles and turn left on Highway 161 (H-161). Continue on H-161 past the golf course, and turn right onto the NSWC landfill entrance road. The Bioremediation Facility is immediately on the left.

As equipment is no longer required in the EZ it will be decontaminated and moved to the SZ. After all contaminated materials are containerized, the remaining equipment will be decontaminated and moved to the SZ. The decontamination equipment will then be cleaned and the work zone barriers removed. All decontamination fluids will be collected, **and** sampled, **and then:** used to moisten the initial compost at the Bioremediation Facility; **or** disposed at the on-site sewage treatment plant; **or** disposed at the Mine Fill A treatment facility; or ~~a disposal~~ **disposed of using a** method approved by the U.S. Navy **EPD Representative**.

6.2.3 Backfilling and Site Restoration

The extent of any excavation and the points at which post-excavation samples were taken will be surveyed to determine the volume of the excavation, to record the extent of the excavation, and to record the location of the post-excavation samples. The excavation will be backfilled to grade with non-contaminated fill from an on-site borrow source at the end of the excavation period, or at the end of each day during periods of predicted precipitation.

Approved 8/14/97

FCR PS003

Backfilled areas will be covered with a minimum of three inches of topsoil (defined as having a minimum of 5% organic matter, which may include the clean soil compost material), seeded with native grasses, fertilized, and watered. Erosion control measures will be maintained until the growth of grasses is sufficient to prevent erosion. Additional details on backfilling and restoration activities are provided in the Soils Excavation Plan in Appendix E.

Should the area of contaminated soil require excavation beyond the volume needed for the pilot scale tests, additional soil excavation and confirmation sampling will take place during the full scale operation.

6.3 AMENDMENT SUPPLY AND STORAGE

The amendments shall be brought on-site by way of the amendment haul road and stored in the asphalt-paved amendment storage bins as illustrated on drawing P-100 in Appendix C. All amendment suppliers will be identified in the Record of Recipe form, Field ~~Standard Operating Procedure (~~SOP~~)~~ 4.0 in Appendix D.

6.3.1 Manure (cow, turkey, chicken)

Cow Manure

The primary amendment ~~supplier~~ **transporter** is: Dayhoff Farms, **located in Lyons, Indiana,** (cow manure, **turkey manure**, chicken manure, alfalfa hay and straw).

The cow manure comes from **Lueken Dairy, located in Birdseye, Indiana. The cows are Holstein milk animals. Their diet consists of alfalfa, grain, and grain by-products. The supplier is** a free-stall dairy and ~~is~~ **supplies** essentially pure manure (i.e., free of bedding material). This manure has been processed through a separator to remove most free liquid leaving the cow manure at approximately 79% moisture.

Chicken Manure

The chicken manure comes from **Wabash Valley Produce, located in Dubois, Indiana. The chickens are** ~~from layer~~ **laying** hens **up to 80 weeks old. Their diet consists of grain, grain by-products, and calcium. The manure contains no bedding,** and contains approximately 1% feathers, eggs or other natural impurities. ~~It is also free of bedding material.~~

Approved 6/11/97

Turkey Manure

The turkey manure comes from D. Benham, a Purdue Farms turkey grower, located in Lyons, Indiana. The turkeys are hens, 6-14 weeks old. Their diet consists of grain, grain by-products, meat by-products, fish by-products, calcium, phosphorus, salt, trace minerals, animal and vegetable fat, anti-oxidants, metholnine, and lysine. The manure contains a bedding material

FCR PS003

that is a mixture of approximately 30% by volume rice hulls, approximately 60% by volume sawdust, and approximately 10% by volume wood chips, and contains approximately 1% feathers.

During any winter operations, the feed and fat content of the chickens and the turkeys must be evaluated.

~~Both the~~ The cow, ~~and~~ chicken, and turkey manures will be delivered in bulk to the amendment storage area. Due to potential odor and leaching concerns, the manures will be delivered within one week of the time they will be incorporated into the windrows to ensure quality and freshness of the amendment.

6.3.2 POTW Sludge

The POTW sludge comes from the main wastewater treatment plant tanks at the NSWC. The sludge is primarily liquid and will be dried or solidified to contain a solid concentration of 20 percent or greater (consistent enough to be stockpiled without causing product run-off). It will be delivered to the Bioremediation Facility at approximately 65-70% moisture. The material will arrive only at the time that particular windrow is being formed. There will be no storage of POTW sludge at the Bioremediation Facility. Caution will be used not to spill or produce leaching of this material anywhere at the facility. The Windrow containing this material will be constructed closest to a sump area in one of the buildings in order to reduce any leachate flow into other windrows.

NSWC may use option D if shale can be used in full

6.3.3 Wood Chips and Sawdust

The amendment supplier for the sawdust and the wood chips ~~are~~ is the ~~NSWC (from chipped wood supplies at the facility), The Good Earth Compost Company located in Bloomington, Indiana, and the Jack Logsdon Company located in Bedford, Indiana.~~ Lyons Kano Brother Inc. Wood chips and sawdust will ~~also~~ be delivered in bulk to the amendment storage area, approximately one week prior to windrow formation. Wood chips shall be ground to 1.5 inch minus size.

6.3.4 Alfalfa and Straw

The amendment supplier for the alfalfa is Dayhoff Farms. The alfalfa hay and straw will be provided in bales bound with a plastic mesh baling material which will be removed prior to amendment blending. The supplier will deliver the alfalfa within one week prior to windrow construction.

Approved 6/4/97

6.3.5 Potato Waste

The amendment supplier for the potato waste is a waste product from Frito Lay Potato Company, located in Frankfurt, Indiana and supplied by Kambach Feeds, located in Frankfurt, Indiana. Vegetable waste will be

Confirm potato waste coming from Frankfort, IN not Louisville, KY
CDF 8/20/97

FCRPS003

delivered in bulk at approximately 65 to 70% moisture. **The potato waste will contain a solid concentration of 20 percent or greater (consistent enough to be stockpiled without causing product run-off). The vegetable waste shall be delivered over a 7-day period prior to windrow construction. Due to the potential of product decomposition, the supplier will not be allowed to stockpile the potato waste for more than 7 days.**

6.3.6 Amendment Storage

The amendments **(with the exception of the POTW Sludge)** shall be stockpiled in bales or piles in bins delineated by movable concrete dividers. Available amendment storage capacity has been allocated for more than 1,200 cubic yards, thus allowing more than sufficient storage capacity of amendments for the pilot scale operation. However, only sufficient amounts of amendments for the pilot scale recipes will be stored in order to minimize excess materials at the completion of pilot scale operations.

Any ponding of water on the asphalt pavement shall be manually removed within 24 hours. All stockpiles are to be covered for protection from wind and rain. The covers are to be placed in a manner that directs clean stormwater away from the storgage area. The covers are to be made of reinforced plastic of sufficient strength (10 to 20 mil plastic) to withstand typical weather conditions and frequent handling. The covers are to be held in position with a sufficient number of sand bags to keep them in place during a strong wind. Efforts will be made to avoid puncturing the covers when placing the sand bags. The stockpiles will be covered at the end of every day. During periods of precipitation, the amendments will be covered to minimize high nitrate and suspended solids run-off to the storm water retention ponds.

6.4 LOAD AMENDMENTS INTO GRINDER/MIXER

Amendments will be loaded in the proper proportions using a center-pivot loader into the farm tractor-powered grinder/mixer unit located in the amendment storage area and transported to the compost building as illustrated on drawing P-100, in Appendix C. The unit will be loaded with amendments based on the selected recipe per the volume ratios given in Table 6-1. ~~Proper ratios will be established based on a weight conversion utilizing scales which are built into the grinder/mixer~~. Loading, complete grinding and blending of as much as 700 cubic feet (nearly 26 cubic yards) of amendments, will take approximately ten minutes. Section 10.0 provides a more detailed description of the operation equipment, and Field SOP 4.0 in Appendix D provides a step by step procedure for loading and blending of amendments.

6.5 LOAD AMENDMENT BLEND INTO WINDROW

Windrow formation will begin by unloading the amendment blend for recipe #1, as shown on drawing P-100, in Appendix C. The amendments will be unloaded from the grinder/mixer unit through a side mounted discharge conveyor forming a windrow approximately six feet high and 12 feet wide. The grinder/mixer will return to the

with FCRPS003

amendments storage for reloading once the blending hopper is emptied. Unloading of the amendment blend will take approximately ten minutes per load. This process will continue until a windrow is formed approximately 20 to 25 feet long.

A second windrow adjacent to and partially overlapping the first windrow, will then be loaded into the building. This will form a single larger windrow approximately 20 feet wide with two peaks six feet high. Figure 6-3 shows the amendment and soil loading windrow dimensions. As windrow ~~#1~~ is completed ~~(recipe #1 amendments)~~, the amendment grinder/mixer will be loaded with materials in the proper proportions for recipe ~~#2~~. This process will continue until all recipe amendment windrows have been formed as shown in Figure 6-4 and drawing P-101 in Appendix C.

the next

If #2 is being removed, then delete reference to #1 also.

Once all amendment blends have been loaded into a building, the windrow turner will turn and shape each of the test piles into a 20 feet wide by 4 feet 5 inches tall windrow. Field SOP 5.0 in Appendix D provides a step by step procedure for loading the amendment blends into windrows.

6.6 LOAD SOIL INTO WINDROW

Once the amendment blend has been loaded in the building and shaped, screened soil shall be transported from the excavation area to the composting facility in covered semi-tractor live bottom trailers. During the clean soil tests, the soil will be taken from an on-site borrow source. During subsequent tests with contaminated soil, the soil will be excavated from Mine Fill A. The trucks shall be inspected in the facility work area, and the quantity and condition of soil recorded, prior to the trailer entering the building. The Project Manager may have flexibility in the field in changing truck routes through the buildings as long as track-out is minimized and the windrows are not impacted. Any major changes will be noted in the field logbook.

Approved Modified CVE 9/1/97

Upon arrival at the Bioremediation Facility, the soil will be loaded onto the amendment windrow using a self powered tow-behind hopper/conveyor unit as shown on drawings P-102 and P-103 in Appendix C. Once the truck has backed into the building, the hopper/conveyor unit will be attached to the rear of the trailer. As the trailer begins to unload the soil into the tow-behind hopper, the discharge conveyor will place the soil on top of the existing amendment blend windrow and complete the formation of the windrow. The truck unloading conveyor and the tow-behind conveyor are both equipped with a variable speed drive for optimum discharge control based on varying soil conditions. As the soil reaches the proper height, the truck will slowly move forward continuing to place soil over the amendment blend windrow until the trailer empties its load.

Soil will be loaded into the south windrows first working from west to east. The empty truck will disconnect from the conveyor unit, leave the building, and proceed to the vehicle decontamination facility (as illustrated on drawing P-102 in Appendix C) where the wheels and exterior will be washed with a high pressure, low volume spray. The truck will then return to the excavation site for another load of soil. Upon returning with

FCRPS003

another load of soil, the truck will back into building #3 where the hopper/conveyor unit will be reconnected for soil unloading. This process will continue until pilot scale amendment blend windrows 1 and 2 are covered with soil to the proper height as shown in drawing P-102 in Appendix C.

Soil will be loaded into windrows on the north side of the building working from east to west in a similar fashion as described above. The truck will exit the west end of the building as shown in drawing P-103 in Appendix C. This process will be repeated for loading of soil into windrows in other buildings. Field SOP 6.0 provides a step by step procedure for transporting and loading soil into the windrows.

Incidental sediments and soils removed from the water collection sumps or ponds will be added to the windrows at this initial stage. Once mixing and initial sampling of the windrow has occurred, no additional potentially contaminated sediments, soils, or water will be added.

6.7 TURN/MIX WINDROW

Once the soil has been loaded into the windrow to the specified level, the windrow/compost turning machine will commence mixing and reforming the windrow. The travel speed of the windrow turner is adjusted automatically based on the density of the material being turned to maintain a constant load on the drum. The windrow turner may make three or more passes during initial windrow construction to assure thorough mixing. The final shape and size of the homogeneous pilot scale windrow is shown on Figure 6-3.

After turning each windrow recipe, **the equipment will be locked out and then,** loose or caked material will be cleaned off of the windrow turner by light brushing or scraping prior to turning the next recipe. Material which has fallen off the sides or been thrown beyond the ends of the windrow will be cleaned up with the skid steer loader and placed back onto the windrow maintaining the original configuration. Flyout material will be minimized by the rubber flap at the rear of the windrow turner. The windrow turning frequency is expected to be daily but will be adjusted as necessary to maintain proper aeration, temperature, and moisture as described in Section 8.0. Figure 6-4 depicts four pilot scale windrows shown with amendment blends only (top view) and the final windrow formation after soil addition (bottom view).

Moisture addition will take place during the windrow mixing stage. A 1½ inch flexible hose will be connected to the spray manifold inlet mounted on the windrow turning machine for a water supply. The windrow turner is also equipped with a ~~200~~ 600 gallon tank for use when water addition is required without a flexible hose source. Potable water will be sprayed onto the compost as it is mixed, thus maintaining the desired moisture concentration throughout the windrow matrix. The method for determining the quantity of water added is addressed in Field SOP 8.0 in Appendix D.

Approved CWS 8/14/97

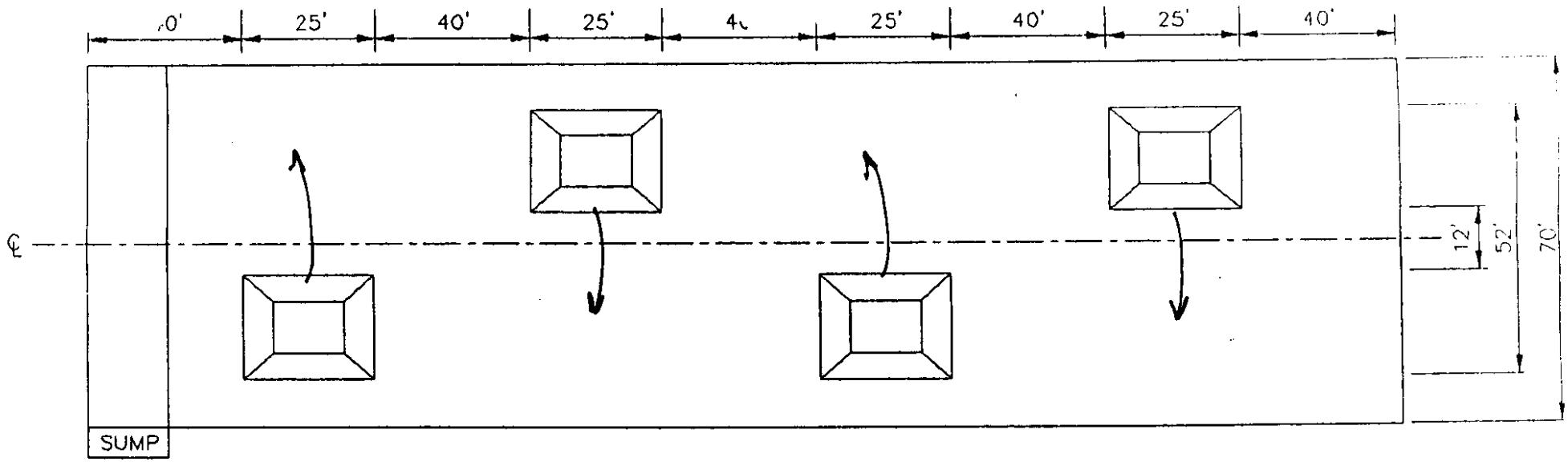

AMENDMENT PILES

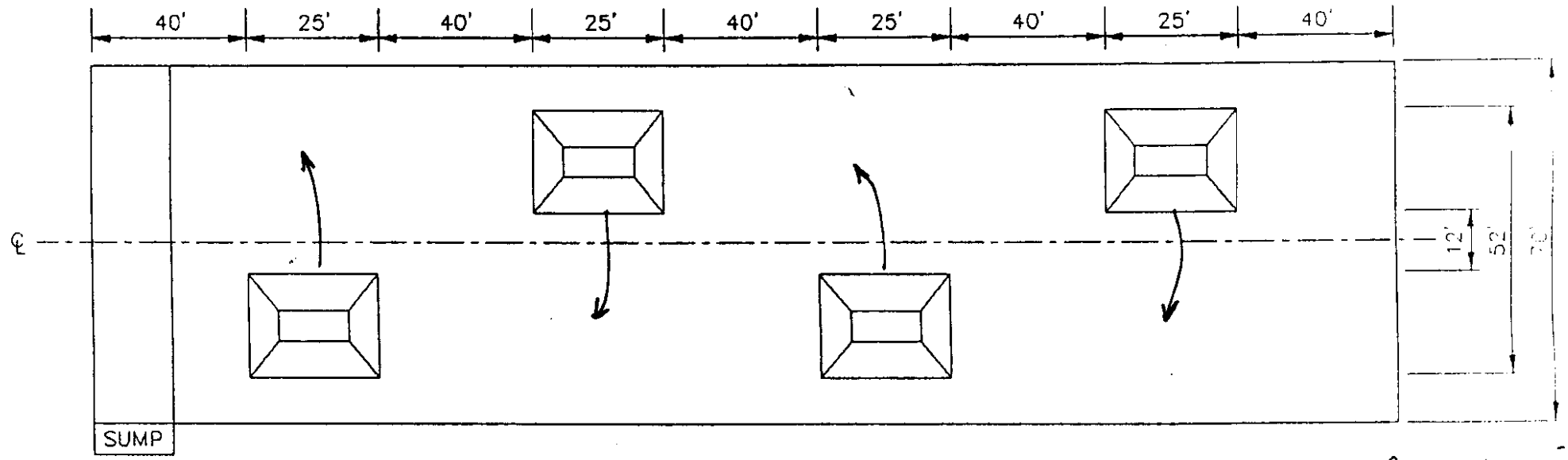

AMENDMENT WITH SOIL ADDED PILES

(FINAL FORM)

Modified 8/14/97

approved 8/14/97 cws

MORRISON KNUDSEN CO

Drawing Figure 5-4

Date ~~4/4/97~~

FCR PS003

7.1.2 Analytical Laboratory Services

Off-site laboratory analysis of soil and water samples collected from compost or wastewater at the Biofacility and from excavations at Mine Fill A will be in compliance with methods and procedures defined in the approved Pilot Scale Bioremediation Facility QAPP.

7.2 DECONTAMINATION

During site activities, all personnel shall minimize contact with contaminated materials to keep "clean" during site activities. All personnel should minimize kneeling, splashing, and inadvertent physical contact with contaminated materials. Field procedures will be developed to control over spray and run-off and to ensure that unprotected personnel working nearby are not affected.

Entrance to the exclusion zones will be limited to personnel trained in accordance with 29 CFR 1910.120. The level of protection worn within each exclusion zone will be specified by the Site Safety and Health Officer (SSHO). Selection of personal protective equipment and anticipated levels of protection are summarized in Tables 5 and 6 of the SSHP. All personnel leaving the exclusion zone will pass through a decontamination zone and follow personnel decontamination procedures as specified in the SSHP.

Decontamination will be required for excavation equipment, gravel and rocks, ~~dump~~ trucks, operating equipment, and personnel. The following paragraphs describe these activities.

7.2.1 Excavation Site Equipment and Rock Washing

Prior to exiting the excavation site, loaded trucks will be inspected for exterior cleanliness. Each truck exterior and wheels will be protected with plastic lining during soil loading; and, therefore, should not need to be decontaminated. However, in case of accidental spillage of contaminated soil onto the truck exterior or if the truck is driven over a contaminated area, the decontamination process will take place. The excavation site decontamination facility is described in the Soils Excavation Plan provided in Appendix E. The equipment decontamination procedure is described in detail in Field SOP 3.0 provided in Appendix D.

Periodically, the need for washing of gravel and/or rocks will occur when excavating in roadway areas, near building foundations, or rocky terrain. The rocks and boulders in the oversized material pile rejected from the soil screening process will be sorted out from the soil clumps and woody vegetation as described in the Soil Excavation Plan provided in Appendix E. The Soil Excavation Plan describes the excavation boundaries, staging areas, decontamination of equipment, facility, and process of soil screening. The separated rocks or gravel will be loaded into a front-end loader bucket and taken to the decontamination pad. The rocks and or gravel will be thoroughly washed of all visible signs of soil with the high-pressure, low-volume spray wash unit. Final rinse samples will be collected and analyzed to determine the cleanliness of the

FCRPS003

washed rocks. If the rinse water does not contain detectable levels of explosives, the washed rocks will be stockpiled in a clean area for use as natural backfill material or as designated by the U.S. Navy. The cleaned gravel will also be stockpiled for use as natural fill material.

7.2.2 Biofacility Truck and Equipment Washing

In order to minimize the tracking of potentially contaminated materials, trucks and other heavy equipment operating inside the compost buildings will be decontaminated prior to exiting the Bioremediation Facility as described in Field SOP 3.0 found in Appendix D. The trucks or heavy equipment will be inspected for exterior cleanliness. All loose dirt shall be swept or brushed off the vehicle exterior. The vehicles will enter a covered staging area where the wheels, wheel wells and other visibly contaminated areas will be washed with a high-pressure, low-volume water spray using a hand held wand connected to an overhead high-pressure supply line ~~pivoting at the center~~. This design enables the operator to ~~walk completely around the vehicle to~~ clean all sides **of the vehicle**. Operators will be trained to avoid potential over spray out of the building or over the walls. **And, personnel will avoid over spraying at the boot wash area.**

At completion of the Pilot Scale tests, equipment will be decontaminated at the vehicle wash area located at the facility exit. In addition to the typical washing requirements specified above, all other areas exposed to potentially contaminated materials will be washed and inspected. This includes truck beds, loader and backhoe buckets, etc. Final rinse samples will be collected and analyzed to determine the cleanliness of the equipment.

All wash fluids will be collected in the vehicle wash area sump. The wash water will be collected and stored in poly tanks or transported to the compost buildings for use as initial process water. Sediments will be collected and added to the windrows at the beginning of a compost cycle during initial windrow formation. No contaminated soil, sediments, or wash water will be added to the compost piles once the initial windrow sampling has been performed.

7.2.3 *Personnel Decontamination Shower Trailer*

A personnel decontamination trailer is located next to the equipment decontamination facility and consists of a change room area, lockers, lavatory, toilets and showers. ~~The northern end of the trailer serves as a lunch/conference room.~~ The trailer sanitary sewer line is routed to the pump/lift station in the office/laboratory area.

7.3 WATER/FLUID COLLECTION AND DISPOSITION

7.3.1 Compost Building Sump Water

Each of the three structures is equipped with an epoxy-coated sump for collection of any excess water in the building. The building sump water will be collected, stored in polyethylene (poly) storage tanks, if necessary, and recycled in the treatment process for compost moisture control. See Process Flow drawings 4324-0009-01-A and 01-C in Appendix C. Any sediments collected in the building sumps will be removed and added

FCRPS003

to the windrows at the beginning of the compost cycle. No contaminated soil, sediments, or wash water will be added to the compost piles once the initial windrow sampling has been performed.

7.3.2 Truck and Equipment Decontamination Water

Any wash fluid which contains soaper antibacterial substance shall NOT be used as windrow process water.

All wash fluids collected in the vehicle wash area sump and the excavation site equipment wash area will be collected and stored in poly tanks or transported to the compost buildings for use as initial process moisture addition. No contaminated soil, sediments, or wash water will be added to the compost piles once the initial windrow sampling has been performed. In the unlikely event that all the wash water is unable to be used in the compost process, the excess wash water will be stored in poly tanks and sampled for disposal. The method of disposal will be primarily at the on-site water treatment facility at Rockeye or Mine Fill A. See Process Flow drawings 4324-0009-01-B and 01-C in Appendix C. A secondary disposal method will be to use an off-site disposal facility, as approved by the U.S. Navy. Sampling frequencies, procedures, and analytical methodologies are contained in Section 4.0 of the approved Pilot Scale Biofacility QAPP.

7.3.3 Storm Water Diversion and Retention Pond Water

The facility will utilize both the existing topography and site drainage controls to control storm water run-off and run-on.

Two lined storm water retention basins sized to store rainfall from a 10-year, 24-hour storm ~~will be~~ are constructed inside the Bioremediation Facility perimeter. These retention basins will retain and store storm water from the area paved with asphalt inside the facility. Pond #1 will retain a maximum of 428,000 gallons of storm water and pond #2 will retain a maximum of 407,000 gallons. A peak discharge flow to the local drainage swales will vary from 315 gallons per minute (gpm) at full level to 160 gpm at low level allowing for controlled off-site storm water discharge. Water collected in the retention basin will be sampled ~~immediately~~ following a storm to determine whether the water meets off-site discharge requirements. Water not meeting off-site discharge requirements will either be recycled in the compost building for initial windrow compost moisture control or transported to the water treatment facilities located at Mine Fill A or Rockeye. Sampling frequencies, procedures, and analytical methodologies are contained in the approved Pilot Scale Biofacility QAPP. **The discharge pipes from the ponds shall remain closed and locked until discharge is approved. At no time shall the operators of the facility allow the ponds to have less than ~~2 feet of~~ freeboard. If the freeboard comes close to that limit and a storm event is anticipated, the U.S. Navy EPD Representative shall be immediately notified.**

Approved w/ mod CWS 8/11/97

FCR PS003

8.0
PROCESS PARAMETERS AND MONITORING

Process control monitoring shall be performed during composting activities. Critical monitoring shall be documented using task-specific formats. General conditions may be noted in project log books or daily reports. For consistency, all monitoring and sampling shall be performed at pre-determined locations within each windrow. Sample locations other than those that are pre-designated shall be clearly identified in the field log book. The following sections identify the requirements for the non-contaminant parameters to be monitored. Sample locations and frequencies for contaminant parameters are described in Section 4.0 of the approved Pilot Scale Biofacility QAPP. Calibration of all field instrumentation will be performed daily prior to use as specified in Field SOP 1.0 found in Appendix D. Recalibration will be performed as required.

The full scale interim measures cleanup goals will be established based on data provided during the pilot scale operation. The recipes will be employed using 25% soil and variations of amendments. It is expected that some recipes will perform better than others. The recipe which provides the best performance in terms of explosive contaminants reduction with shortest process time and the lowest cost will be selected for use in the full scale operations. Those windrows whose recipes fail to meet pilot scale performance goals will remain in one the buildings until they can be reintroduced in the full scale operation, mixed with amendments based on the successful recipe, and be re-treated in order to meet the established full scale cleanup criteria.

If all pilot scale tests fail and no mix meets the performance goals, the U.S. EPA Region 5 Coordinator shall be notified and new bench scale testing will be required.

8.1 PROCESS PARAMETERS

The process parameters essential to successful biodegradation of the explosive contaminants are listed in Table 8-1. The parameters will be measured and monitored as described in Section 8.2 of this Operational Plan. All in-situ measurements (i.e., temperature, oxygen level) will be taken prior to removing sample material for other measurements or analyses. These process parameters apply to both clean soil and contaminated soil testing. If process parameters fail during clean soil tests, the decision may be made by the U.S. Navy and the U.S. EPA to delete that mix from further testing. If process parameters fail during contaminated soil tests, the decision may be made by the U.S. Navy and the U.S. EPA to continue testing if degradation is evident.

8.2 PROCESS MONITORING

All in-situ process parameters such as temperature and oxygen, will be ~~monitored in undisturbed compost, i.e.~~ measured prior to sample extraction so as to obtain representative levels of the measured parameter. Adjustments to the process for temperature, oxygen, and moisture will be performed pending the monitored results. The adjustments will be made based on predetermined contingency process methods discussed in the following sections. Figure 8-1 shows the decision paths for instituting the contingency process methods.

Approved 8/14/97

FCR PS003

TABLE 8-1 NON-CONTAMINANT PROCESS PARAMETERS	
Process Indicators	Operating Range
Temperature	25 to 60 °C
Moisture	40 to 60 % (MWHC)[1]
pH	5.5 to 9.0
Carbon : Nitrogen	Various[2]
Oxygen	5 to 20%

[1] Denotes Maximum Water Holding Capacity
[2] C:N will be monitored for change only and will not be adjusted. C:N will vary based on mixture selection.

8.2.1 Temperature Monitoring

Temperature is one of the most important monitoring parameters since it is a primary indicator of successful achievement of conventional thermophilic composting operations in the windrows. The process goal is to maintain average windrow temperatures near 55°C for at least two weeks. The average pile temperature rises to the temperature range of 25 to 40°C within the first few days of formation, continues rising to within the temperature range of 40 to 65°C, and maintains that temperature range for at least two weeks. Based on conventional composting practice, such temperatures indicate a healthy, metabolically active windrow. Temperature decrease over time below 50°C is viewed as an indicator of a pile that is nearing the end of its operation (Weston, 1993).

The temperature of each windrow shall be monitored daily. Temperature readings will be taken before and after each turning event of the windrow, at the core and near the surface. Temperature readings shall be taken at six sampling/monitoring locations at each of the cross-sections using a hand-held compost temperature probe and indicator as specified in Field SOP 1.0 in Appendix D. These locations are selected to provide representative temperature profiles of each cross-section in the windrow for the inner core and outer near-surface conditions. A turning event may consist of multiple passes of the turning machine.

Ambient air temperature and humidity inside the buildings shall be monitored daily during any composting activities using a standard alcohol or mercury thermometer and a hygrometer. The thermometer will incorporate a degrees Celsius scale. All temperature and humidity measurements shall be recorded in the field log book. Temperature monitoring equipment will be calibrated as specified in Field SOP 1.0 in Appendix D.

Approved CWS 8/19/97

FCR PS003

The following contingency plans are related to temperature monitoring:

~~1. If, after two weeks, the average temperature fails to reach 40° C in a clean soil test, then the decision may be made by the U.S. Navy and U.S. EPA to delete that mix from further testing~~ ~~**the mix will be eliminated from further testing.**~~

~~2.~~
1. If the moisture content is within the required range, and the oxygen levels are greater than 10%, and temperatures of the compost do not reach the thermophilic range of 40 to 60°C, and target levels of TNT, HMX, and RDX are not being degraded, then the recipe will be considered a failure. Reintroduction or alterations of amendments will not be performed without approval of the U.S. Navy and **the** U.S. EPA representatives.

~~3.~~
2. If the moisture content is within the required range, and the oxygen levels are less than 5%, and temperatures of the compost do not reach the thermophilic range of 40 to 60°C, and target levels of TNT, HMX, and RDX are not being degraded, then the windrow will be turned within 6 hours for additional aeration.

~~4.~~
3. If the moisture content is within the required range and the temperature at any monitoring location in the compost pile exceeds 70°C, then windrow turning will be performed within 6 hours in order to provide aeration and cooling. Temperatures greater than 60°C may be detrimental to microbial growth and explosives degradation will be reduced.

8.2.2 Moisture Level Monitoring

The operating goal for composting moisture content is 40 to 60% MWHC. If moisture levels are excessively low or high (beyond the typical ranges), proper composting and explosives degradation may be affected. Too little moisture will inhibit microbial movement and nutrient availability. Excess moisture will cause the moisture to fill the void spaces needed for proper aeration, thus reducing the oxygen level and aerobic microbial growth.

Moisture level monitoring will be performed three times at a minimum of per week prior to windrow turning. ~~per week prior to windrow turning, thereby enabling moisture to be added during the turning operation~~. If moisture is added to the windrows, moisture levels will be checked again after windrow turning. Because the results cannot be obtained until approximately the next day, moisture levels will be determined prior to windrow turning the following day, or moisture needs to be added, will be added whenever possible prior to any time.

Moisture level samples will be collected from three locations at each cross-section as described in SOP 1.0 in Appendix D. The samples at each cross-section location will be composited for a total of four composited samples per windrow. The following moisture data will be determined per the procedure described in Field SOP 1.0 provided in Appendix D.

Approved w/mod CWS 8/14/97

FCR PS003

- Percent moisture.
- Water-holding capacity (i.e., percent moisture at saturation).
- Percent saturation.
- Percent water-holding capacity.

All moisture measurements shall be recorded in the field log book. The analytical balance equipment will be calibrated as specified in Field SOP 1.0 in Appendix D.

Moisture levels will be adjusted to the proper levels by water addition from any of three available sources:

1) Through a spray system integral to the windrow turner machine, **or**

2) By direct spray from a low pressure potable water supply hose, or

3) By direct spray of recycle water (~~decon water~~, **building sump water,** storm water, etc.) from a collection tank supply hose**, only at the initial compost creation stage.**

Moisture addition during the initial windrow formation may utilize the recycle water sources, however once the process has been initiated and sampling has been performed, only a potable water source will be used for moisture addition. **Equipment decontamination water using soap or other chemicals shall NOT be used as recycled water.** Excess moisture will be adjusted by increasing the turning frequency thereby driving off excess moisture by aeration.

The following contingency plans are related to moisture level monitoring:

1. If the moisture content is below 40% of the MWHC, then moisture addition will be performed during the windrow turning process. The decision to add moisture will be based on the moisture content analysis results as described in Field SOP 1.0 in Appendix D. Due to variability of density between different recipes and changes in volume and density during the composting process, it is not possible to provide generic guidance for the quantity of water to be added for moisture adjustment. ~~Based on initial windrow volumes and average densities, approximately 67 gallons of water will raise the moisture content by 1% for a typical windrow. To avoid adding too much moisture, no more than 150 gallons will be added to any windrow prior to an additional moisture content analysis.~~

Due to high evaporation rates with high ambient temps.,

leave in

2. If the moisture content ~~is above 60% MWHC,~~ and the ~~windrow temperature~~ is below 45°C, then additional windrow turning will be performed to provide aeration and drive off excess moisture. If the moisture content cannot be reduced and the windrow fails to sustain temperatures in the thermophilic range (above 40°C), then the pile will be considered a failure. Reintroduction or alterations of amendments will not be performed without approval of the U.S. Navy and **the** U.S. EPA representatives.

In normal weather conditions, no more than 250 gallons will be added w/o taking a moisture reading.

Approved w/mod CAS 8/14/97

FCR PS003

mixing by the windrow turning machine has been performed, as described in Field SOP 2.0 in Appendix D. Sampling and analysis requirements for TKN level monitoring shall be performed as described in the approved Pilot Scale Biofacility QAPP.

8.2.6 Oxygen Level Monitoring

Typical compost oxygen levels for rapid degradation are greater than 5%; however, the preferred level is much greater than 5%. If sufficient oxygen levels are not maintained, proper microbial degradation may not occur, and thermophilic temperatures would not be maintained. Oxygen levels decline rapidly to very low levels (less than 5%) in a short time after mixing. Oxygen levels of less than 1% indicate the process is approaching anaerobic conditions, and aeration is required.

Oxygen level monitoring will be performed at the same locations and frequency as the temperature monitoring activity using a hand-held probe and indicator as described in Field SOP 1.0 in Appendix D. Typical compost oxygen levels for rapid degradation are greater than 5%, however the preferred level is as high as 20%. All oxygen measurements shall be recorded in the field log book. Oxygen monitoring equipment will be calibrated as specified in Field SOP 1.0 in Appendix D.

The following contingency plans are related to oxygen level monitoring:

1. If it is necessary to adjust aeration (interstitial oxygen), then the turning frequency will be adjusted **based on temperature, if necessary.**

2. If moisture content is within the acceptable range, and the windrow temperature is falling and the oxygen content is below 5%, then windrow turning will be performed within the same day.

3. If, after thorough turning, the oxygen content is still below 5%, and temperatures below 40°C then the windrow may not have sufficient pore space (bulk) and will be considered complete or a failure. Reintroduction or alterations of amendments will not be performed without approval of the U.S. Navy and U.S. EPA representatives.

8.2.7 Explosives Level Monitoring

Explosives to be monitored during the contaminated Soil ~~Tests~~ Phase are listed in Table 8-2. Samples for laboratory analysis (U.S. EPA SW846 Method 8330) will be collected from each of the sampling/monitoring cross-sections, at locations 1, 2, and 3, on days 0~~, 7, 14, 21, and 28~~ **0, 5, 10, 20, 30, 40, and 60** of the windrow life cycle after complete mixing by the windrow turning machine has been performed, as specified in Field SOP 2.0 in Appendix D. Sampling and analysis requirements for explosives level monitoring shall be performed as described in the approved Pilot Scale Biofacility QAPP.

Approved w/ mod CWS 8/14/97

FCRPS003

8.2.9 Air Monitoring

In addition to the process control monitoring, atmospheric air monitoring and sampling will be conducted ~~to meet the requirements of~~ as specified in the Site Safety and Health Plan developed for Operations at the Biofacility. ~~Gas sampling will include volatile organics, oxygen level (percent volume), hydrogen sulfide, carbon monoxide, carbon dioxide, ammonia, oxides of nitrogen, nitrous fumes, formaldehyde, total dust, metals as an aerosol, explosive residues as an aerosol, and biological agents as an airborne aerosol~~. The industrial hygiene air monitoring and sampling campaign is discussed in Section 15.0.

Approved CWS 8/14/97

FCRPS003

9.0
SAMPLING AND ANALYSIS

All sampling and analysis will be performed as described in this Section and the approved Pilot Scale Biofacility QAPP. The QAPP describes sampling and analysis procedures including laboratory methodologies and Quality Assurance/Quality Control requirements for the following activities:

- Compost windrow sampling requirements for contaminants.
- Fluid collection systems sampling requirements for storm water and decontamination water.
- Pre- and Post-excavation soil sampling requirements
- Health and Safety air sampling.

Table 9-1 summarizes the parameters to be monitored and the sample frequency described below. Appendix D of ~~the~~ **this** Pilot Scale Operational Plan contains field process parameter SOPs.

9.1 COMPOST WINDROW SAMPLING

The three composting structures at the facility shall be numbered Buildings 1 through 3. Within the buildings, the pilot scale windrows shall be numbered ~~consecutively~~. consistent with the recipe Mix number.

For sampling and monitoring purposes, four cross-sections, lettered A through D, shall be established along each windrow. Cross-section A shall be five feet from the end of the windrow nearest the Facility work area (northeast end). Cross-section D shall be five feet from the end of the windrow furthest from the Facility work area (southwest end). Locations B and C shall be evenly spaced between locations A and D as shown on Figure 1-1, in Field SOP 1.0 in Appendix D. At each cross-section, six sampling/monitoring points shall be established as described in Field SOP 2.0 in Appendix D.

9.2 FLUID COLLECTION SYSTEMS SAMPLING

Various liquids may be collected throughout the facility including compost process leachate, storm water, and decontamination water. These liquids are expected to be used as sources of process water for the initial compost windrow formation. Additional quantities of waste water generated during the project will be sampled for discharge or disposal, as required. The frequency of liquid sample collection will depend on the quantities generated or collected. The sampling parameters are listed in Table 9-1.

Approved 8/4/97 CCS

FCRPS003

TABLE 9-1 SAMPLING AND ANALYSIS SCHEDULE[1]			
Matrix	Parameter	Frequency	Method
1. Pre-excavation soil	Explosives per Table 8-2; Totals & TCLP metals, VOCs & TCLP list VOCs per QAPP	2 composites per 20' x 20' grid block; one grab sample (VOCs)	Method 8330, 6010, 1311, 7470 & 8240.
2. Post-Excavation soil	Per Table 8-2; Totals of site-specific metals & VOCs per QAPP	Base: 1 composite and one grab per 20' x 20' grid block Sidewalls: 1 composite and 1 grab per 20'	Laboratory (various)
3. Windrow compost	Per Table 8-2, TOC, TKN	1 sample per location *per cross-section: Day* ~~0, 7, 14, 21, 28~~ **0, 5, 10, 20, 30, 40, 60**	Laboratory (SW846 8330, EPA 9060 & 351.3)
4. Windrow compost	TCLP & Totals of site-specific metals per QAPP	1 sample per location per cross-section: Day **0 &** ~~28~~ **60**	Laboratory (SW 846 6010, 1311, & 7470)
5. Windrow compost	Temperature	Daily: before & after turning	Field SOP 1.0 in Appendix D
6. Windrow compost	Moisture	Three times per week and directly after moisture addition	Field SOP 1.0 & 2.0 in Appendix D
7. Windrow compost	pH	One time per week	Field SOP 1.0 & 2.0 in Appendix D
8. Windrow compost	Oxygen	Daily: before & after turning	Field SOP 1.0 in Appendix D
9. Storm water	Per NPDES	After heavy rainfall or per NPDES Reqmt	Laboratory (various)
10. Decon/wash water	Per POTW influent requirements	As required for disposal	SW846 8330 & POTW parameters

Notes:
1. Complete sampling and analysis procedures and details are provided in the Biofacility Pilot Scale QAPP.

Approved 6/4/97

FCRPS003

11.0
QUALITY CONTROL

As prime contractor, MK will implement and ~~retain full authority of the Quality Control Plan (QCP) for this project. The QCP is a separate bound document and is found in Appendix H and is to be used in conjunction with this Operational Plan. MK will~~ manage all matters involving Quality Control performed in the execution of NAVFACENGCOM Delivery Orders. This approach provides the U.S. Navy with a quality management system having clear lines of authority and responsibility, and a consistent approach and application of quality requirements.

The QCP ~~found in Appendix H,~~ identifies quality testing and inspection requirements for the scope of work to be performed. To supplement the information contained therein, Appendix G of this Work Plan provides Field Inspection Checklists for general and specific items when performing inspections. The QCP is found in Appendix H.

In addition, the NSWC EPD personnel will perform quality checks and inspections of the Contractors work and operation based on the approved Operational Plan. The U.S. EPA also retains the authority to perform quality checks and inspections.

CDK 8/20/97

FCRPS003

14.0
RECORDS AND RECORDING

Field personnel will generate and maintain detailed records of all site activities beginning with equipment and material receipt. A daily project logbook will be maintained on-site to document all relevant activities. General narrative descriptions of field activities will be included in the logbook along with any sketches needed to document field decisions. Field personnel will be responsible for ensuring that the log is current and thoroughly accounts for work accomplished.

In addition to the project log, pertinent data forms are prepared for accumulation of operating and monitoring data associated with both the composting and excavation portions of the project. The data forms will be used primarily to record monitoring information. The forms will be maintained in a three-ring binder in the office trailer at the Bioremedation Facility. Examples of the reporting forms are provided in the various Field SOPs in Appendix ~~D~~F Additional forms may be amended to this plan as developed during the Pilot Scale test.

The general information recorded for each windrow will include: soil source, date excavated, and date placed, mix number, amendment quantities and types, moisture added, windrow dimensions, etc. Complete monitoring and sampling data will also be recorded for each windrow. Dates, locations, and results will be recorded for laboratory analyses and process parameter monitoring, including all items in Table 9-1. The windrow turning schedule and ambient temperature, wind, and humidity will also be recorded.

After the treatment of a windrow is complete, the date of removal and the general location of the interim storage area will be recorded on an Interim Storage Form (Appendix ~~B~~)F Reports will be generated as required by the Navy and regulatory agencies such as:

- Draft Pilot Scale Report - This report will include a summary of pilot scale operations, process adjustments, survey maps of the excavation area and field sample locations, temperature, moisture, and oxygen profiles, explosives degradation vs. time graphs, any approved deviations from the operational plan, analytical results summary, conclusions, and full scale operation recommendations.

- Final Pilot Scale Report - This report will include any additional information and revisions required to the Draft Pilot Scale Report for reporting the results and full scale recommendations.

- Initial Batch Report - This draft report will include the analytical and process data, operation summary and conclusions for the completion of the first batch of soil composting from Mine Fill A.

Approved CWS 8/14/97

1-CR-PS003

- Interim Progress Reports - These reports will include a summary of operations and analytical results, cubic yards of soil processed, process adjustments, etc., and will be submitted upon completion of the clean soil test and the contaminated soil tests.

- Daily Reports - These reports will include a summary of daily operations; monitoring logs; temperature, moisture, oxygen, and any other process parameter results; and analytical results upon receipt from the laboratory. The Daily Reports will be legible and fa~~xed at the end of the~~ business day to the U.S. Navy and **the** U.S. EPA. faxed by 10:00 Am the following

- Photographic Documentation - Documentation will include color photographs and videos of the various stages of excavation, transportation, windrow formation, monitoring, windrow completion, and compost interim storage.

Approved CWS 8/14/97

FCRPS003

15.0
SITE SAFETY, HEALTH, EMERGENCY RESPONSE AND CONTINGENCY PLAN

15.1 SITE SAFETY AND HEALTH PLAN

The project's life cycle safety and health management, emergency preparedness and prevention, contingency planning and emergency procedures is established and is planned to be maintained in the Task-Specific SSHP. A special pilot scale SSHP document has been prepared which presents the initial industrial hygiene air monitoring and sampling campaign requirements and is provided in Appendix A.

After pilot scale, a full-scale operation SSHP will be prepared that includes all follow-on air monitoring and sampling campaign requirements and any specifics including lessons learned on process, equipment and operational changes. Minor revisions to the plan may be necessary in the areas of personnel decontamination (Section 10 of the SSHP), Emergency Response Plan and Contingency Procedures (Section 12 of SSHP), Spill Containment (Section 16 of the SSHP), and the Activity Hazards Analysis (AHA) worksheets found in Attachment A of the SSHP in Appendix A. New information will also be added on safety and health requirements applicable to the on-site laboratory trailer.

Weekly inspection checklists are provided in Table 5 of the SSHP in Appendix A. AHA worksheets may be revised based on field experience of Pilot Scale operation.

15.2 AIR MONITORING

Industrial hygiene air monitoring and sampling are described in Section 7.0 of the SSHP document. During excavation work, the presence of volatile organic compounds (VOCs) will be identified using a photo-ionization detector (PID) instrument. Further identification and quantification will be completed where necessary using colorimetric indicator tubes. VOCs are not expected to be a concern. During composting, indicator tubes will be available to assess ammonia, carbon dioxide, carbon monoxide, formaldehyde, hydrogen sulfide, nitrogen dioxide and nitrous fumes inside of the composting building. ~~Ammonia is the only compound expected to be present that may be of concern. The levels of ammonia most likely will not exceed occupational exposure limits but can be present in concentrations that can cause upper respiratory irritation.~~

Leave in section. Leave.

Airborne dust levels from fugitive emissions will be measured and assessed using a direct reading, real-time aerosol monitor. With engineering and administrative controls in place for dust, fugitive emissions are not expected to be a problem. ~~The work site and the perimeter will be monitored on a daily basis.~~

Later during the study due to complete mixing and degradation.

Approved but need to have operational problems in study. CWS 9/14/97

FCRPS003

A combustible gas/oxygen/toxic gas meter will be used to evaluate conditions prior to entering confined spaces, excavations, and other areas deemed appropriate by the SSHO. This instrument will have a readout and alarm for lower explosive levels (10% methane), oxygen level in percentage, as well as carbon monoxide toxic gas detection. This instrument, along with the colorimetric indicator tubes, will provide initial qualification and quantification of atmospheric conditions in each compost building.

15.3 AIR SAMPLING

The pilot scale industrial hygiene time integrated air sampling campaign will assess potential airborne occupational exposure to chemical and biological agents and will include both personal and area samples. Air sampling results will provide the basis for PPE upgrades or downgrades, assessment of engineering controls, and the need for any special administrative controls. Constituents include organics, metals, explosives residue as airborne aerosols, and biological agents.

Time-integrated air sampling for hydrocarbons will be completed in accordance with NIOSH Methods 1500, 1501, and 1003. ~~During composting, two area samples for each method will be obtained inside of the composting building and outside (representing background).~~ See Section 7.3.1 of the SSHP for materials and methods, and sampling strategy.

Time integrated air samples for metals will be completed in accordance with NIOSH 7300. ~~Two personal samples will be obtained during soil excavation and screening tasks. Two personal samples will be obtained from the windrow machine operator and two area samples will be obtained inside of the composting structure~~. See Section 7.3.2 of the SSHP for material and method and sampling strategy.

Time integrated air samples for explosive residues as airborne aerosols will be completed based on OSHA 44 Method with laboratory analysis in accordance with EPA 8330 Method. ~~Six personal samples will be obtained during soil excavation and screening tasks. Six personal samples will be obtained from the environmental technician. Six area samples will be obtained inside of the composting structure~~. See Section 7.3.4 of the SSHP for material and method and sampling strategy.

Time integrated air samples for bioaerosols will be completed using a high volume sampling pump, two stage impactor and culture dishes filled with growth media for bacteria and for fungi (molds and yeast). The bacteria culture dish will be subcultured for analysis of E.coli using velvetten impression. ~~Six area samples for each analysis category will be obtained inside of the structure and six samples for each analysis category will be obtained outside of the structure (representing background). Inside structure samples will be obtained shortly after the windrows are mixed and approximately one week into the composting process~~. See Section 7.3.4 of the SSHP for material and method and sampling strategy.

Approved, change
CWS 8/14/97

FCR PS003

During composting, dip slide samples may be obtained from water accumulated in the building sump and analyzed for biologicals. Also, contact slide samples may be obtained from any assumed fungal growth on building components and analyzed for biologicals. See Section 7.3.4 of the SSHP.

Wipe sampling will be performed randomly throughout the pilot scale operations to assess effectiveness of the personnel decontamination operation. ~~Random wipe samples will include the insides of personnel protective equipment, clean side change rooms, and the lavatory and lunchroom areas~~. Metals and explosive residues will be tested. Details are provided in the SSHP, Section 7.3.5.

15.4 NOISE MONITORING

Noise levels will be monitored ~~at the start of each task and monthly thereafter, or when there is a change in equipment or job layout~~ as part of the Pilot Scale Operations. A Type 2 sound level meter will be used to assess potential occupational noise exposures.

15.5 EXPLOSIVE CONTAMINATED MATERIAL HANDLING

The Contractor shall comply with all requirements and recommendations from the U.S. Navy concerning management of explosive contaminated materials. Recommendations from the Hazard Analysis report must be implemented. Several pieces of machinery may have to have explosive containment or other devices attached to or near the equipment to satisfy the recommendations. If this occurs, the equipment may be shut down for a retrofitting between the clean soil and the contaminated soil composting periods.

Approved CWS 8/14/97

FCR TSCC.3

3.3 Measurement Procedure

The samples will be taken in the following order:

1. **In-situ reading of Oxygen.**
2. **In-situ reading of Temperature.**
3. **Sample withdrawn for on-site laboratory analysis of moisture and pH (Three times per week).**
4. **Sample withdrawn for off-site laboratory analysis (Days 0, 5, 10, 20, 30, 40, and 60).**

Oxygen measurements shall be collected prior to temperature measurements at all six monitoring locations at each cross-section **and shall be done prior to any samples being removed**. The following procedure shall be used to collect oxygen and temperature measurements with the Demista oxygen-temperature monitor:

1. Post-turn

1. ~~Oxygen measurements shall not be collected prior to one hour following turning of the windrow.~~ the ~~within~~ event Oxygen measurements shall be collected as soon as Practical after completion of turning. Preferrable within 15 minutes.
2. Prior to the first reading of the day, calibrate the oxygen/temperature probe as described in ~~Section 3.2 above.~~ ~~**Measurements will be taken in a sequence of Locations 1A, 1, 2A, 2, 3A, and then 3.**~~ at Grid A, B, C, And D; Leave What? at the following
3. Insert the oxygen/temperature probe into the pile at each of the six locations at the four cross-sections described in Section 2.2 above. Oxygen measurements should always be made by inserting the probe into an undisturbed location so that the measurements are representative of the settled material, and not biased by void spaces or channels to the pile surface.
4. Activate the "oxygen" mode by pressing down the rear portion 'O' of the control switch on the monitor.

Approved as mod
CWS
8/14/97

Thought moved to next page

approved

5. Aspirate 4-6 times, or until the reading stabilizes. Record the oxygen measurement ~~in~~ ON the ~~field logbook~~ Daily Process Log form, including date, time, and sample identification.

6. Aspirate 2 - 4 times. Activate temperature mode, **wait for reading to stabilize, and then** record the temperature measurement ~~in~~ ON the ~~field logbook~~ Daily Process Log form.

7. **Decontamination shall occur according to Field SOP 3.0 in this Appendix, at the end of measuring each ~~cross-section and~~ windrow.**

NO! the SOP states decon w/ paper towels to get any accumulated soil off probe and that should be done

denied 2/14/97

Temperature Monitoring with the Thermocouple Probe and Temperature Meter

In the event that the Demista oxygen-temperature probe is not functional, temperature measurements shall be collected using the thermocouple probe and temperature meter. There is no backup method for measuring oxygen level. The following procedure will be used to collect temperature measurements using the thermocouple probe:

1. Connect the probe to the P1 connector on the temperature meter.

2. Press the C key for °C readout. The legend on the LCD display will indicate °C.

3. Press the MODE key for the meter to display the temperature of P1.

4. Press the RESET key to clear the internal memory.

5. Insert the probe to the appropriate depth for each of the six sample locations at each of the four cross-sections for the windrow being measured, as described in Section 2.2 above. Press and hold the MIN/MAX key until the reading stabilizes. The display will alternate between the minimum and maximum reading from the time after the instrument is RESET. The legend on the LCD will indicate MIN and MAX with the readings.

6. Record the date, time, sample identification, and temperature meter MIN/MAX values in the field logbook. Calculate the average temperature meter measurement by adding the MIN and MAX values and dividing by 2.

Move to next page

FOR PSCC 5

4.0 MOISTURE LEVEL MONITORING

This section describes the procedure to be followed for collecting moisture level monitoring measurements.

4.1 Tools and Materials

The following tools and materials are required to collect moisture level measurements:

- ~~hand auger~~
- ~~hand auger~~
- **stainless steel push tubes with sleeves or split spoon**/hand auger
- measuring tape
- **dedicated** 4 ft 7 in.-long measuring stick marked with six-inch intervals
- stainless steel bowls (4 per windrow)
- stainless steel spoons (4 per windrow)
- sealable **disposable** plastic bags
- ~~microwave oven~~
- **drying oven**
- **desiccator**
- ~~furnace~~
- **tongs**
- ~~disposable plastic weigh boats~~
- **weigh boats** ~~(glass)~~ (aluminum) ~~moisture cans~~
- **crucibles**
- **analytical balance (+/- ~~0.001~~)** 0.1
- ~~scale~~
- squeeze bottle with distilled water
- paper towels
- **sample tags (see approved Pilot Scale QAPP)**
- **sample labels (see approved Pilot Scale QAPP)**
- **tape**
- **transporting device from buildings to the on-site lab**
- field logbook
- indelible pen

Approved 8/14/97

FCR PSCC3

4.2 Calibration

The scale shall be calibrated once per week using standard weights in accordance with the manufacturer's Instruction Manual. Calibration shall be documented in the field logbook.

4.3 Sample Collection

Samples for moisture level monitoring will be collected three times per week following oxygen/temperature measurement collection. If water is added to the windrow during turning, moisture level measurements will also be collected no sooner than 1 hour after moisture is added and the windrow is turned. Moisture level samples shall be collected as quickly as possible to minimize moisture loss prior to analysis. Moisture level sub-samples will be collected from locations 1, 2, and 3 at each cross-section, using a ~~hand auger~~ **push tube** or hand auger. The three sub-samples will then be composited to form one sample for each cross-section. The following procedure shall be used to collect moisture level monitoring samples at each cross-section:

1. Use the measuring tape and measuring stick to locate cross-sections A through D, and sample locations 1, 2, and 3 at each cross-section, as described in Section 2.2 above.

2. Insert the ~~auger~~ auger/**push tube** into and perpendicular to the pile at each sample location. **Push the auger/tube to the designated depth (3 feet for sample location 1, and 2.5 feet for sample locations 2 and 3) or a little deeper to insure a complete sample at that depth.** ~~Remove the material between the surface and the designated depth at each sampling location, placing the removed material on top of the pile and next to the cross-section location, until the auger has reached the designated depth (3 ft for sample location 1, and 2.5 feet for sample locations 2 and 3).~~

Approved 9/14/97

FCRPSCC 3

3. ~~Fill the auger with the material at the designated sampling depth.~~ Remove the ~~auger from the borehole,~~ ~~push~~ auger tube and extract the material from the ~~auger tube from the~~ appropriate depth location (i.e., the bottom portion of the tube), and place into a designated stainless steel bowl with a stainless steel spoon or scoop. Combine in the bowl the material from sample locations 1, 2, and 3 at a single cross-section. Auger

4. Thoroughly mix the material in the bowl with a stainless steel spoon, then place the composited sample into a new disposable re-sealable plastic bag pre-labeled with the windrow number and the cross-section letter. Tape a tag identifying the ~~labeled with the~~ sample identification number, date, time, sampler's name, windrow number and cross-section letter, to the bag.

5. A new decontaminated stainless steel bowl and stainless steel spoon, ~~and new disposable re-sealable plastic bag with labels and tags~~, shall be used for each ~~cross-section.~~ windrow.

6. Sample tags shall be retained in the field office files as evidence once filed lab measurements are finished.

4.4 Measurement Procedure

The following procedure will be used to obtain the parameters for calculating moisture levels for each cross-section composite sample. All weights shall be recorded ~~in~~ on the ~~field logbook~~ Lab moisture Data ~~Sheet~~ form Sound in Appendix G. Weights shall be reported to the tenth of a gram.

1. For each cross-section sample, weigh and label a ~~plastic~~ weigh boat ~~or crucible~~ with the sample identification number. Record this as tare weight, T1.

2. ~~Place approximately 25 grams of the cross-section sample into the labeled weigh boat or crucible, weigh, and record the sample weight, W1. Reserve the remainder of the sample in the plastic bag for pH measurement, if scheduled for that day.~~

FCRPS003

~~3. Remove the sample and weigh boat **or crucible** from the scale. Slowly wet the sample with distilled water from the squeeze bottle until the sample is saturated and water begins to run off into the weigh boat **or crucible**. Carefully pour off the excess water or absorb it with a paper towel without removing any of the solid material.~~

add back in.

~~4. Re-weigh the sample and weigh boat **or crucible** and record this as the saturated weight, ~~S1~~.~~ GS,

~~5. Place the sample and weigh boat in the microwave oven and heat on "high" for 20 minutes.~~

~~6. After 20 minutes of drying time, remove the sample and weigh boat from the microwave and re-weigh. Record this weight as the dry weight, D1.~~

2. **Place a 10-15 gram sample in the tared weigh boat and record the gross wet weight.** as G1

3. **Dry sample in oven at 105 - 110 degrees C for 24 hours or until a constant weight is reached.**

4. **Place dried sample in dessicator for 20 minutes, and then record the gross dry weight of the sample plus weigh boat.** ~~(Weigh weigh boat first, or tare weigh boat prior to adding droid sample.)~~ (as GD1) (or until cool) Cooling periods for aluminum weigh boats may be very short with small sample sizes. Therefore, use of dessicator may not be required.

5. Collect all used sample material from a single pile **(windrow), after the moisture and pH measurements have been finished,** and place in a **disposable** sealable plastic bag **labeled** for disposal **back** onto that **same** pile **where the sample came from**. Do not mix samples from different piles **(windrows)**.

6. **Dispose of clean soil bags as solid waste. Dispose of contaminated soil bags as contaminated, according to U.S. Navy EPD procedures.**

Approved CWS 8/14/97

FCRPS cc 3

PM - Percent Moisture of ORIGINAL SAMPLE
PMS - Percent Moisture at Saturation
PS - Percent Saturation (water holding capacity)
PWHC - Percent of Water Holding Capacity

Need to add calc 8/15/97 talks to Gene Coffey to willfully fix it

4.5 Calculations

The following calculation shall be performed:

~~**% Moisture of Original Wet Sample = (#2 - #4) divided by #2 times (100)**~~

Calculation sheets shall be maintained in the field laboratory.

~~The following parameters shall be calculated for each cross-section sample using the recorded data:~~

~~Parameter~~	~~Symbol~~	~~Formula~~	~~Result~~
~~Mass of water lost from original compost sample during drying~~	~~M_{W1}~~	~~W1 - D1~~	~~M_{W1} = grams~~
~~Mass of water added to original compost sample to obtain saturation~~	~~M_{S1}~~	~~S1 - W1~~	~~M_{S1} = grams~~
~~Percent moisture (original compost sample)~~	~~PM~~	~~$\frac{M_{W1}}{(W1-T1)} \times 100$~~	~~PM = %~~
~~Percent moisture (at saturation)~~	~~PMS~~	~~$\frac{(M_{W1} + M_{S1})}{(S1-T1)} \times 100$~~	~~PMS = %~~
~~Percent saturated~~	~~PS~~	~~(PM/PMS) x 100~~	~~PS = %~~

Approved

4.6 DECONTAMINATION

Decontaminate moisture weighing tools upon completion of the moisture weighing ~~event~~ ~~date~~ event.

FCR PSCC 3

5.0 pH MONITORING

This section describes the procedure to be followed for collecting pH measurements.

5.1 Tools and Materials Required

The following tools and materials are required to collect ~~moisture~~ **pH** level measurements:

250 ml glass beaker
100 ml graduated cylinder
stir rod
scale
Hach EC10 portable pH meter
distilled water
field logbook
indelible pen

5.2 Calibration

The pH meter shall be calibrated prior to use in accordance with the manufacturer's Instruction Manual. Calibration shall be documented in the field logbook.

5.3 Sample Collection

pH measurements shall be made on the composite sample material from each cross-section which remains after the moisture level sample portion has been removed from the **disposable** plastic bag. If it is necessary to collect a separate sample for pH monitoring, the sample locations shall be established as described in Section 2.2 above, and sample material shall be collected with a ~~hand auger~~ **push tube** as described in Section 4.3. **A new sample bag, tag, and label must then be used.**

hand auger/

FCRPS003

5.4 Measurement Procedure

The following procedure will be used to measure pH for each cross-section composite sample. All measurements shall be recorded in the field logbook. Weights shall be reported to the tenth of a gram. pH measurements shall be recorded to the tenth of a pH unit.

1. For each cross-section sample, weigh and label a 250 ml glass beaker with the sample identification number. ~~Record this as tare weight, T1.~~ X

2. Place approximately 10 grams of the remainder of the cross-section sample into the labeled beaker, ~~weigh, and record the sample weight, W1.~~ X

3. Remove the sample and beaker from the scale. Measure 50 ml distilled water in the graduated cylinder and add the water to the sample in the beaker.

4. Stir the sample material and distilled water in the beaker with the stir rod for 15 seconds. ~~Repeat stirring for 15 seconds every 10 minutes for 30 minutes. This will add up to 4 stirring periods: at time 0, 10 minutes, 20 minutes, and 30 minutes.~~

5. Allow the sample to sit for one hour to allow the solids to settle.

6. Immerse the pH electrode in the liquid portion in the beaker. Do not allow the electrode to rest on the bottom of the beaker, but keep the electrode above the solid layer.

7. Allow the reading on the pH meter to stabilize, then record the pH value in the field logbook.

8. Thoroughly rinse the pH probe with distilled water between sample measurements. X

Approved 6/4/97

5.5 DECONTAMINATION

Decontaminate the sampling equipment at the end of sampling each windrow. All sampling equipment must be decontaminated or dedicated and disposable for each windrow sampling event Procedures are identified in Field SOP 3.0 of this appendix.

2. Sample location 2 is located on the south side of the pile at a depth of 2.5 feet perpendicular to the surface. Lay the 4 ft 7 in. measuring stick on the south side of the pile from the ground surface up, and mark the point on the pile at the end of the stick. Then hold the measuring stick perpendicular to the side of the pile and insert to the 2.5-foot mark.

3. Sample location 3 is located on the north side of the pile at a depth of 2.5 feet below the surface. Lay the 4 ft 7 in. measuring stick on the north side of the pile from the ground surface up, and mark the point on the pile at the end of the stick. Then hold the measuring stick perpendicular to the side of the pile and insert to the 2.5-foot mark.

3.0 Sample Collection

This section describes the procedure to be followed for collecting sample material from the compost windrows for off-site laboratory analyses.

3.1 Tools and Materials

~~hand auger~~
stainless steel push tubes with sleeves or split spoon AND/OR HAND AUGER
measuring tape
dedicated 4 ft 7 in.-long measuring stick marked with six-inch intervals
stainless steel bowls
stainless steel spoons
appropriate sample containers (see Section 4.0 of the approved Pilot Scale QAPP)
field logbook
indelible pen
sample tags
sample labels
tape
coolers
preservatives
chain of custody forms
plastic bags for placing sample containers in
Wiley Mill
Riffle/Splitter

Approved 9/14/97 CWS

All sample extraction tools which come in contact with the sample shall be decontaminated prior to use as described in Field SOP 3.0.

3.2 Sample Collection Procedure

Samples for off-site laboratory analysis will be discrete as described in Section 4.0 of the approved Pilot Scale QAPP. Discrete samples will be collected from locations 1, 2, and 3 at each cross-section, using a hand auger. Table 1-1 shows the Process Parameter Sampling and Analysis Schedule for the compost material. The following procedure shall be used to collect discrete samples at each cross-section:

Pilot approved CWS 8/14/97

1. Use the measuring tape and measuring stick to locate cross-sections A through D, and sample locations 1, 2, and 3 at each cross-section, as described in Section 2.2 above.

2. Insert the ~~auger~~ AUGER **push tube** into and perpendicular to the pile at each sample location. **Push the tube** auger **to the designated depth (3 feet for sample location 1, and 2.5 feet for sample locations 2 and 3) or a little deeper to insure a complete sample at that depth.** ~~Remove the material between the surface and the designated depth at each sampling location, placing the removed material on top of the pile and next to the cross-section location, until the auger has reached the designated depth (3 ft for sample location 1, and 2.5 feet for sample locations 2 and 3).~~

deleted

No longer need to straight into glass jars.

3. ~~Fill the auger with the material at the designated sampling depth.~~ Remove the ~~auger from the borehole~~ AUGER/ **push tube** and extract the material from the ~~auger~~ AUGER **tube from the appropriate depth location**. Place the extracted material directly into ~~the appropriate sample container~~ **using a stainless steel spoon or scoop**. (Sealable disposable plastic bag)

6. ~~Follow the~~ sample **labeling, tagging,** identification, chain of custody, and shipping and handling procedures described in Section 4.0 of the approved Pilot Scale QAPP. Document all sampling activities in the field logbook.

~~5.~~ 4. Place ~~placing~~ **the remaining sample on top of the pile and next to the cross-section location.**

5. Follow the milling and splitting procedures described in Section 4.0 of the approved Pilot Scale QAPP.

FCR15003

Storm/run-off Water

The same procedure described above for collecting samples from decontamination water will be used to collect samples of storm water and run-off water **in the retention ponds**. If the water level in the retention ponds is too low to sample using a **bottom-filling** bailer, then **a sampling device on a stick or rod** ~~sample containers~~ will be filled ~~directly~~ by submerging in the water. ~~In this case, care shall be taken so that any preservative in the sample containers is not lost.~~ **The sample shall be transferred to the appropriate sampling container. At no time will the sampler enter the retention ponds.**

X Alternative Storm/runoff Water Sampling.
An NSWC Crane representative may perform the storm/run-off water sampling in lieu of the above, based on the IDEM approved NPDES permit requirements.

description

Approved 5/14/97

4.0 SAFETY AND HEALTH PRECAUTIONS AND CONTROLS

1. Use Modified Level D PPE including disposable dust masks when off loading, grinding, and loading amendments.

   Add requirements for hearing protection here based on results of sound level surveys.

2. Maintain clear distance of approximately 15 feet and wear high visibility vest when working around moving machinery. Stay in equipment operators line-of-sight.

3. Ensure all rotating equipment guards are in place and functional prior to equipment operation.

4. Disengage power to the PTO when removing any remaining material from the grinder/mixer using a broom or brush. At no time should a person reach into the bin or enter the bin of the grinder/mixer unless the unit is disconnected from the PTO drive coupling.

5.0 PROCEDURE

X Approximately

X

X Approximate

X

Each pilot scale recipe will consist of 60 cubic yards of material, 45 cubic yards of which will be the amendment blend, the remaining 15 cubic yards will be the 25% soil loading. Figure SOP 4-1, *Pilot Scale Recipe Spreadsheet* lists the quantity in cubic yards of each amendment for each recipe to be tested. The corresponding weight in pounds is also provided. The amendments for a given recipe will be combined ~~in~~ **for each of the** three 15 cubic yard batches (this will allow room for blending and fluffing). Figure SOP 4-2, *Pilot Scale Batch Spreadsheet* provides the amendment quantities for each of the three 15 cubic yard batches.

Four ~~bat~~ or more batches may be required when mixing high volumes of alfalfa or straw. Experience has shown that approximately 8 cubic yards of baled alfalfa or ~~hay~~ straw is the maximum mixable volume for one batch.

FCR PS003

5.1 Zero Balance the Scales

The scales of the grinder/mixer must be zero balanced prior to each use. This is accomplished as follows:

1. Remove any remaining material from the grinder/mixer using a broom or brush.

2. Press the [ON] key on the scale display.

3. Press the [NET/GROSS] key and within three seconds,

4. Press the [ZERO] key.

5. "ZERO" will be displayed to indicate zero balancing is complete.

5.2 Loading Amendments

The lighter amendments should generally be loaded first (e.g., straw, hay, sawdust and wood chips). The manures and vegetable waste should be loaded last to provide improved mixing. After zero balancing the scales, as described above, the amendments shall be loaded into the grinder/mixer as follows:

1. Select the proper recipe mixture from Figure SOP 4-2, *Pilot Scale Batch Spreadsheet*. Record the Recipe #, Date, and Design Quantities on the *Record of Recipe* form, ~~provided in Appendix~~ **as in Appendix G of this Pilot Scale Operational Plan.**

2. Load the first amendment via the center pivot loader from the amendment storage bin and gradually dump into the grinder/mixer until the desired ~~weight is registered on the scales.~~ volume is added. Record the volume AND actual weight on the *Record of Recipe* for that mix batch.

3. Press the [TARE] key on the scale display to establish a temporary zero point.

4. Press the [NET/GROSS] key to select NET mode.

5. Load the second amendment in a similar fashion until ~~the scales register~~ the desired ~~weight~~ volume of that amendment has been added. Record the actual weight volume and on the *Record of Recipe* **form** for ~~that mix~~ batch.

6. Repeat steps 2, 3 and 4 for each additional amendment to be added.

5.3 Blending of Amendments

Once all amendments for that batch have been loaded into the grinder/mixer, the mixer will be activated to chop and blend the amendment mixture. Chopping and blending will continue as the grinder/mixer is pulled to the composting building by the farm tractor. Each load shall be blended for a minimum of ten minutes. The blended amendment batch will be unloaded as described in SOP 5.0.

FCR PS003

MORRISON KNUDSEN CORPORATION
NAVFAC SOUTHERN DIVISION

FIELD STANDARD
OPERATING PROCEDURE: 8.0
TITLE: WINDROW TURNING AND MOISTURE ADDITION

1.0 PURPOSE

This procedure describes the methods which will be used to turn pilot scale windrows and add water to adjust moisture content.

2.0 SCOPE

This procedure applies to the Naval Surface Warfare Center, Crane, Indiana site for Bioremediation Facility pilot scale operations.

3.0 EQUIPMENT

The following equipment will be used to turn pilot scale windrows and add water to adjust moisture content of the compost windrows:

3.1 Windrow Turner

The Windrow Turner is a Scarab model 20HYD450. This is a specialized piece of equipment designed to turn, mix and aerate a twenty-foot wide windrow with a maximum height of seven feet. It is equipped with a ~~200~~ 600 gallon tank and spray nozzles to add moisture to windrows during the turning process.

3.2 Mobile Water Tank

The Mobile Water Tank is a ~~1,000~~ 1,100 gallon capacity, trailer mounted poly tank. It is equipped with a five horse power gasoline powered discharge pump with a two-inch discharge. It can be pulled by a farm tractor, one-ton pick-up truck or other comparable equipment.

3.3 Portable Transfer Pump

The Portable Transfer Pump is a five horse power gasoline powered pump with a two-inch semi-rigid suction pipe and a two-inch flexible discharge hose.

5.1 Windrow Turning

Each pilot scale windrow will be turned daily after pre-turning monitoring of the windrows is complete. The following steps will be followed during the turning process:

1. Position the windrow machine at the windrow to be turned.

2. Engage the drum on the windrow machine and begin turning the windrow.

3. Upon reaching the end of the windrow, stop the windrow machine and disengage the drum.

4. Lockout the windrow machine; the driver will exit the cab, lock the door and wait on the windrow machine platform until given clearance by the person cleaning the underside of the machine.

5. Clean caked material from the drum and flaps of the windrow machine.

6. Cleanup material which has been thrown beyond the ends of the windrow and place in back onto the windrow using a skid steer loader or similar piece of equipment.

7. Repeat steps 1 through 6 for the remaining windrows to be turned.

5.2 Moisture Addition

Water will be added to the windrows to adjust moisture content when the actual moisture level falls below 40% of the MWHC (Reference Field SOP 1.0 for determination of actual moisture and MWHC). Water will be added using the spray nozzles on the windrow machine during the turning process. ~~No more than 100 gallons will be added to a single windrow prior to taking additional moisture readings~~. Water will be added as follows:

using a hose with a flow meter and spray nozzle connected to the Building Potable water source, OR using a hose and spray nozzle connected to the trailer mounted calibrated tank

FCR PS003

MORRISON KNUDSEN CORPORATION
NAVFAC SOUTHERN DIVISION

FIELD STANDARD
OPERATING PROCEDURE: 8.0
TITLE: WINDROW TURNING AND MOISTURE ADDITION

USING the WINDROW TURNER

1. ~~The 500 gal~~ Poly tank on the windrow machine ~~will be marked at the half full level.~~ is marked in 50 Gallon increments

2. Start with water level ~~either full or at the half full mark~~. At a predetermined level. (Suggested at 300 Gallons)
3. Engage spray nozzles at the start of windrow turning.

4. Each pass with the windrow machine will add approximately 30 to ~~40~~ 50 gallons of water.

5. Monitor level of water in tank to assure no more than ~~half a tank (100 gallons)~~ the desired amount is added to the windrow.

6. Two or three passes may be required to add the desired amount of moisture.

~~7. After water addition, the tank will be refilled to the starting level with a metered water supply to determine actual amount added.~~

8. Record amount of water added on the Windrow Process Data - Daily Log found in Appendix D of ~~the~~ **this** Pilot Scale Operation Plan.

USING the ~~Bunkers Potable Water Source~~ Trailer Mounted 1100 Gallon Tank and Pump

1. The 1100 Gallon ~~poly~~ trailer mounted poly tank is marked in 100 Gallon increments.
2. Start with a water level at a predetermined level.
3. Add water to the windrows using the hose and spray nozzle attached to the trailer mounted pump. Spray the windrow ~~in an even~~ with an even light spray.
4. Monitor the level of water in the tank to assure no more than the desired amount is added to the windrow
5. ~~Bare amount to bunker sand with concrete~~ If large quantities of water are required (200 Gallons or more) one-half of the water may be applied ~~after~~ before the first windrow turning and one-half after. ~~All wm~~ The windrow will be turned after each water application.
6. Record the amount of water added on the Windrow Process Data Daily Log

Approved
CWS 8/14/97

Page

FCRPS003

APPENDIX E
SOIL EXCAVATION PLAN

ADD to SOP 8.0 Last page.

Using The Building Potable Water Source

1. Add water to the windrow using the hose and spray nozzle connected to the Building potable water source. An inline flow meter will be used to monitor the volume of water added
2. Spray the windrow with an even light shower distributing the water the entire length of windrow on all sides.
3. Monitor the flow meter to assure no more than the desired amount is added to the windrow.
4. Record the amount of water added on the Windrow Process Data Daily Log.

8/14/97

Modified Addition 8/14/9 / Approved CW

LMDFRMT.XLS

Example Laboratory Moi re Data Form

Date: 17-Jul

Mix	Cross Section	T_1	G_1	W_1	GS_1	S_1	GD_1	D_1	M_{W1}	M_{S1}	PM	PMS	PS	PWHC	pH	Day #
2	A															19
	B															
	C															
	D															
	Dup															
3	A															18
	B															
	C															
	D															
	Dup															
4	A															19
	B															
	C															
	D															
	Dup															
5	A															18
	B															
	C															
	D															
	Dup															
6	A															18
	B															
	C															
	D															
	Dup															
7b	A															19
	B															
	C															
	D															
	Dup															
7c	A															19
	B															
	C															
	D															
	Dup															

FCP5003

Laboratory Moisture Data Form Definitions

T_1	Tare weight of weigh boat.
G_1	Gross weight of sample and weigh boat.
W_1	Net weight of sample. ($G_1 - T_1$)
GS_1	Gross weight of saturated sample and weigh boat.
S_1	Saturated weight of sample. ($GS_1 - T_1$)
GD_1	Gross dry weight.
D_1	Dry weight of sample. ($GD_1 - T_1$)
M_{W1}	Mass of water in original sample. ($W_1 - D_1$)
M_{S1}	Mass of water at saturation. ($S_1 - D_1$)
PM	Percent moisture of original sample. ($[M_{W1}/W_1] \times 100$)
PMS	Percent moisture at saturation. ($[M_{S1}/S_1] \times 100$)
PS	Percent saturation. ([PM/PMS] x 100)
PWHC	Percent water holding capacity. ($[M_{W1}/M_{S1}] \times 100$)

Modified addition 8/14/97
Approved CWS

FCR P5003

ORIGINAL

NAVFAC Southern Division/ Morrison Knudsen Corporation	District II RAC

FIELD CLARIFICATION REQUEST (FCR)

Delivery Order No.: 4324-0009	**Subcontract No.:** 4324- NA	**FCR No.:** 4324-0009-FCR-PS004
Pilot Scale Operational Plan, Site Safety and Health Plan		Page 1 of 1

Reference Documents: Pilot Scale Operational Plan Appendix A; Site Safety and Health Plan, Rev. 5 dated June 6, 1997 and the Pilot Scale Operational Plan Appendix D, SOPs

Problem / Change Description:

Based on initial clean soil testing operations and results from the industrial hygeine and safety monitoring, the following changes are requested to the Pilot Scale Site Safety and Health Plan and Field SOPs:

Attached marked pages: A-11, A-12, A-27, A-29, A-30, A-31, A-32, A-72, A-77, pages 2 and 3 of 4 in Attachment A, and pages 4, 5, and 8 of 9 in Attachment A. SOP 4.0 page 2 of 6, SOP 8.0 page 2 of 4, and SOP 10.0 pages 4, 5, 6, 7, 8, 9, 10, 11, 12, 13, and 14 of 19.
All lines affected are marked with an X in the margin.

Initiated by	Signature:	Organization: Morrison Knudsen	Date: 07/28/97

Resolution:

If this FCR affects a subcontract, indicate CID number: N/A

Approval by MK PE	Signature:	Date: 7/28/97	**Approval by ROICC/NTR or RPM**	Signature:	Date 8/22/97
Approval by MK PjM	Signature: D Beall	Date: 7/28/97	Additional Reviews: By/Date R. S. SSHO 7/29/97		
Approval by MK QC	Signature: Steven Coy	Date: 7/28/97	Christine D. Freeman NSWC Crane EPD 8/25/97		
Approval by MK REG SPT.	Signature: Steven Coy	Date: 7/28/97			

Regulator Approval/Notification Recommended:

Yes ☐ No ☐ Approval 8/14/97

A:FCRPS001.DOC

FCR-5004

4.0 SAFETY AND HEALTH PRECAUTIONS AND CONTROLS

1. Use Modified Level D PPE including disposable dust masks when off loading, grinding, and loading amendments.

   Add requirements for hearing protection here based on results of sound level surveys.

2. Maintain clear distance in path of approximately 15 feet and wear high visibility vest when working ~~around~~ moving machinery. Stay in equipment operators line-of-sight.

3. Ensure all rotating equipment guards are in place and functional prior to equipment operation.

4. Disengage power to the PTO when removing any remaining material from the grinder/mixer using a broom or brush. At no time should a person reach into the bin or enter the bin of the grinder/mixer unless the unit is disconnected from the PTO drive coupling.

5.0 PROCEDURE

Each pilot scale recipe will consist of 60 cubic yards of material, 45 cubic yards of which will be the amendment blend, the remaining 15 cubic yards will be the 25% soil loading. Figure SOP 4-1, *Pilot Scale Recipe Spreadsheet* lists the quantity in cubic yards of each amendment for each recipe to be tested. The corresponding weight in pounds is also provided. The amendments for a given recipe will be combined ~~in~~ **for each of the** three 15 cubic yard batches (this will allow room for blending and fluffing). Figure SOP 4-2, *Pilot Scale Batch Spreadsheet* provides the amendment quantities for each of the three 15 cubic yard batches.

FCRAS004

4.0 SAFETY AND HEALTH PRECAUTIONS AND CONTROLS

1. **Follow explosives handling procedures as required by the U.S. Navy.**
2. Use Modified Level ~~C~~ D PPE per the Site Safety and Health Plan (SSHP). Personnel shall avoid direct contact with contaminated soil as much as possible.

   Add requirements for hearing protection here based on results of sound level surveys.
3. Maintain clear distance of approximately 15 feet and wear high visibility vest when working around moving machinery. Stay in equipment operators line-of-sight. Ensure back-up alarms are operational on equipment.
4. Ensure all rotating equipment guards are in place and functional prior to equipment operation.
5. All personnel shall maintain minimum 30 feet clearance from in the front or rear of the windrow turner during turning of the windrows.
6. Operate Windrow Turner with cab door closed and latched in position. ~~Adjust ventilation system in cab for comfort.~~
7. Use lockout controls on Windrow Turner when cleaning the flaps and drum during windrow turning activities.

5.0 PROCEDURE

Windrows will typically be turned once daily during pilot scale operation. Turning frequency may be adjusted at the direction of MK Engineering, with concurrence of the U.S. Navy. Additionally, windrows will be turned after water addition. The operating goal for compost moisture content is 40 to 60% of the Maximum Water Holding Capacity (MWHC) of the compost. Too little moisture will inhibit microbial movement and nutrient availability, however too much moisture will fill the void spaces needed for proper aeration which is essential for aerobic

The outside samples will total 24 the same as the inside samples. Velveteen impression will be obtained for the same amount of samples as the inside samples, 6 samples. An estimated 4 field culture blanks will be obtained in the field.

4.1.1 Procedure

Bioaerosol samples will be collected in accordance with the guidance presented in the American Industrial Hygiene Association (AIHA), Field Guide for the Determination of Biological Contaminants in Environmental Samples (AIHA, 1996).

The airflow for the sampling unit will be adjusted to 28.3 L/min and verified using a factory calibrated electronic bubble-tube calibrator with a capacity to 30 L/min. Prior to calibration, the temperature, pressure, and relative humidity will be recorded on a calibration log sheet. During calibration, designated calibration only plastic petri dishes will be inserted into the impactor stages. The impactor stages will be placed in a 4 L calibration jar as described in Bisesi and Kohn, (1995). The pre-sampling flowrate (Q_{pre}) will be determined using the electronic bubble-tube calibrator based on the average result of three measurement trials and recorded on the calibration log sheet.

Prior to sampling, each plate will be labeled to specify stage, location, and sampling time. After calibration, the impactor stages will be disassembled and sprayed and swabbed with seventy percent ethanol/water and air dried on disposable pans. Disposable latex gloves will be worn when disinfecting and handling the impactor and sample plates.

After air drying, the impactor stages will be loaded with sample petri dishes. The petri dish samples will be placed concave surface down on disposable pans pre-wiped with seventy percent ethanol/water.

lids

At the sampling site, the sampling pump will be turned "ON" and start time recorded. After a specified time, the pump will be turned "OFF" and stop time recorded. Sampling time will be ten minutes. Ten minutes was selected as the sampling time based on Figure 21-5 from Nevalainen et at. (1993). This figure shows at an assumed concentration of bioaerosols particles in air of $10^3/m^3$, the recommended Andersen two-stage sampling time is 17.7 minutes. Based on

data reviewed from IH sampling at other types of composting facilities, concentrations of bioaerosols in air could be approximately $10^3/m^3$ or higher. If levels are higher, ten minutes should provide enough of a factor to prevent overloading the sample media, leading to counting errors and inhibition effects.

After completing sampling, the unit will be disassembled and the covers of the petri dish installed. The plates will be placed in a cooler filled with blue ice right-side-up. The blue ice will maintain storage temperatures of about 4 °C during shipment to the laboratory. One set of negative controls (field blanks) for every ten collected samples will be prepared. A set of negative controls will be prepared by loading the sampling instrument with filled plates, followed by removal of the plates without activating the sampling pump. Shipment and storage of negative control plates coincides with the environmental samples.

In addition to the field blanks, two travel control blanks will be sent by the analytical laboratory with the shipment of petri dishes. The travel control blanks are not opened in the field and are returned to the laboratory with the field samples for analysis to determine if contamination could have occurred. A Chain-of-Custody form will be completed and attached to the cooler. As part of the analytical laboratory quality control program, one laboratory trip blank and one laboratory field blank will also be analyzed.

The calibration only plastic petri dishes were again inserted into the impactor stages and post-sampling calibration flow rate (Q_{post}) data will be obtained and the data recorded on the calibration log sheet. Q_{post} will be checked to make sure its value is within 10% of Q_{pre}. The average flow rate (Q_{avg}) will be calculated based on the average of the pre- and post- sampling flow rates and recorded on the calibration log sheet. Q_{avg} becomes the actual flow rate in the field (Q_{act}) and is corrected in the field to standard flow rate (Q_{std}), where standard temperature and pressure equal 25° C (298 Kelvin (K)) and 760 mm Hg (Pressure (P), respectively. Q_{std} is calculated from the following equation and the value recorded on the calibration log sheet:

$$Q_{std} = Q_{act} \times (298/T) \times (P/760)$$

4.1.2 Sample Analysis

A separate growth media as described in the Material section for both respirable and non-respirable fractions will be used for each of the following constituents

and analyzed accordingly:

1. Total bacteria (total plate count), subculture from bacteria plate for *E.coli* as a marker from manure.

2. Fungi (molds and yeast), look especially for the fungus *Aspergillus fumigatus.*

At the laboratory, as soon as possible and before 24 hr, the sample plates will be placed right-side-up for fungi and upside down for bacteria in an incubator set at an appropriate temperature for incubation. For bacteria, the incubation temperature will be 35 ± 1 °C for 48 hours ± 2 hr. For fungi (molds and yeast), the incubation temperature will be 35 ± 1 °C for 120 hours. After incubation of the bacteria plates, a velveteen impression will be obtained and pressed onto either McConkey or EMB growth media for *E.coli* subculturing and subsequent analysis.

Analysis for bacteria (total plate count) will be completed by laboratory using a Quebec colony counter, dark-field, with suitable light source and grid plate in accordance with Food and Drug Administration (FDA) Bacteriological Analytical Manual. Analysis for *E.coli* will be completed by laboratory using the MICRO-ID system (MICRO-ID, 1989). The MICRO-ID system contains filter-paper disks impregnated with reagents which detect the presence of specific enzymes and/or metabolic produced by certain microorganisms. These reagents include a substrate to be acted upon by a bacterial enzyme and a detection system which reacts with the metabolic end-product to yield identifiable color change. Precise quantities of substrate and/or detection reagents are applied to each disk. Following interpretation of results, identification of *E.coli* can be made by visual identification or through the MICRO-ID Identification Manual.

Analysis for fungi (molds and yeast) will be completed by laboratory using a Quebec colony counter, dark-field, with suitable light source and grid plate in accordance with Lyle Laboratories SOP for Yeast and Mold Count, Document Number 369-72 (SOP, 1996) based on procedures for determining plate count developed by the Association of Official Analytical Chemists (AOAC), and by the American Public Health Association (APHA).

The concentration of microorganisms will be determined based on the number of colonies counted divided by the volume of air sampled. The concentration is

expressed in units of colony forming units per cubic meter of air (cfu/m^3) as calculated in the following equation:

$$\text{Bioaerosol concentration (cfu/m}^3\text{)} = \frac{\text{Number of colonies counted}}{\text{Vol. of air sampled in m}^3}$$

4.1.3 Data Analysis

The laboratory will report quantitative laboratory analysis for each sample in raw data (as total count) and cfu/m^3. The laboratory will report qualitative laboratory analysis results for each sample by identifying the type of microorganism found.

4.2 Explosives Residues

During soil excavation and screening at the Mine Field A facility, six personal samples of full shift duration, or if necessary, split shift duration will be obtained from ~~two of the laborers. The laborer's are considered~~ the maximally exposed individual~~, for this task~~.

At the composting facility, six personal samples of full shift duration, or split shift if necessary, will be obtained from the ~~Environmental Technician. The Environmental Technician is considered the~~ maximally exposed individual during the composting process~~, since he will be responsible for supervising the building of the windrows, applying water during mixing and refining of the windrows, and for monitoring process parameters~~.

~~The construction superintendent may also be in the building during windrow building assisting the Environmental Technician. If this is the case, personal samples of full shift or split shift will be obtained~~.

Four to six area samples inside of the composting structure during active composting will be obtained as a basis for design and verification of breathing zone sampling strategies (Rock, 1995). The area samples will be of full shift duration, obtained inside of the compost building near the compost piles, but far enough so as not be hit by the windrow turner machine and any of the compost thrown from its mixing flails. The sample pump and media will be secured ~~to a portable step ladder~~ at approximately 1.5 m above the floor. Area samples should be biased by representing the worst-case exposure~~, since no one will be~~

~~in the structure during turning of the windrows once "active" composting begins except for the windrow machine operator. The windrow machine operator will be working from an enclosed cab with inlet air filtration. One or two personals samples may be obtained from the windrow machine operator, however, the time to complete two to three passes through the compost piles is minimal. Thus sufficient sampling time may not be obtainable.~~

The personal samples will be compliance samples. (Rock, 1995) reports that for compliance sampling, one or more samples determine whether the exposure samples is in or out of compliance. (Rock, 1995) also reports that this technique does not predict overall conditions in the workplace; it is valid only for estimating the meaning of the exposure(s) observed at the time and place of the compliance sampling campaign, as specified in the regulation. (Rock, 1995) states at least six samples are required for a valid estimate of the confidence interval around the mean and more than eleven are required to estimate the variance.

4.2.1 Procedure

To obtain a full shift sample of eight hours (hr) of 120 L air volume, the flow rate of the pump will be adjusted to 0.5 L/min and verified using a factory calibrated electronic bubble-tube calibrator with a capacity to 4 L/min. If split shift samples of four hour duration are obtained, the pump will be adjusted to 1.0 L/min. Prior to calibration, the temperature, pressure, and relative humidity will be recorded on a calibration log sheet at the sampling site. Both ends of a labeled OVS tube will be broken open and inserted into the OVS tube holder. The sampling train will be assembled. It will consist of high-flow pump with tygon tubing connected to a tube holder. After assembly, the sampling pump with sampling train attached, with the addition of a moisture trap will be checked for calibration to 0.5 L/min.

The pre-sampling flowrate (Q_{pre}) will be determined using the electronic bubble-tube calibrator based on the average result of three measurement trials and recorded on the calibration log sheet.

The OVS tube holder containing a labeled sampling tube will be positioned vertically and attached to the worker within the breathing zone, and the air sampling pump will be secured to the belt of the worker for personal sampling. The sampling train will be positioned and secured to a step ladder approximately

1.5 m above the floor for area sampling.

At the sampling site, the sampling pump will be turned "ON" and start time recorded. After a specified time, the pump will be turned "OFF" and stop time recorded. After sampling, the sampling train will be removed from the worker and the post-sampling calibration flow rate (Q_{post}) data obtained and the data recorded on the calibration log sheet. Q_{post} will be checked to make sure its value is within 10% of Q_{pre}. The average flow rate (Q_{avg}) will be calculated based on the average of the pre- and post- sampling flow rates and recorded on the calibration log sheet. Q_{avg} becomes the actual flow rate in the field (Q_{act}) and is corrected in the field to standard flow rate (Q_{std}), where standard temperature and pressure equal 25° C (298 Kelvin (K)) and 760 mm Hg (Pressure (P), respectively. Q_{std} is calculated from the following equation and the value recorded on the calibration log sheet:

$$Q_{std} = Q_{act} \times (298/T) \times (P/760)$$

The OVS tube will be removed from the holder and the sample media label checked and the OVS tube end caps will be custody sealed, wrapped in protective covering, and placed in a cooler filled with blue ice right-side-up. The blue ice will maintain storage temperatures of about 4 °C during shipment to the laboratory. A Chain-of-Custody form will be completed and attached to the cooler.

One set of negative controls (field blanks) for every ten collected samples will be prepared. A set of negative controls will be prepared by assembling the sampling train with an opened OVS tube inserted into the tube holder, followed by removal of the OVS tube without activating the sampling pump.

4.2.2 Sample Analysis

At the laboratory, the samples will be analyzed per USEPA Method 8330 (USEPA SW846, 1994) using a Hewlet Packard 1040A UV-VIS Diode Array High Pressure Liquid Chromatography (HPLC) detector system providing a scan for specific analytes and isomers including HMX, RDX, TNT, 1,3-DNB, TNB, and 2,4-DNT. The analysis will be completed in accordance with Lyle Environmental Management, Inc., Standard Operating Procedure (SOP) CH-17 (SOP, 1995). Samples will be extracted with acetonitrile and analyzed by HPLC. The area of the peaks of the unknown sample will be compared to standard injections.

FOR PROOF

Desorption efficiency (DE), expressed in percent, will be calculated by the analytical laboratory and factored in to determine the mass of analyte on the OVS Tube sections. The concentration (C), of analyte in the air volume sampled (V) in L will be calculated from the following equation:

$$C\ (mg/m^3) = \frac{[W_f\ (mg) + W_b\ (mg) - B_{fb}\ (mg)] \times 10^3}{V\ (L)}$$

where:

- C = concentration of analyte in air, in mg/m^3
- W_f = mass of analyte found in the sample front, in mg
- W_b = mass of analyte found in the sample back (if any), in mg
- B_{fd} = mass of analyte found in the blank front minus the blank back, in mg
- V = volume of air sampled, in L

During sample analysis, if $W_b > W_f/10$, the analytical laboratory will report breakthrough and possible sample loss. The OSHA Method 44 uses gas chromatography with thermal energy analyzer and explosives analysis package (GC/TEA/EAP), but lists HPLC as one of several very adequate analytical techniques for DNT and TNT. The OSHA OCIS CSI (CSI, 1996) lists HPLC-UV for RDX and HMX analysis. By using EPA Method 8330, an analysis of the key analytes can be conducted from a single media using one method.

4.2.3 Data Analysis

The laboratory will report analysis results in mg/m^3 for each detected constituent.

4.3 Metals

During soil excavation and screening at the Mine Fill A facility, obtain two personal samples of full shift duration, or if necessary, split shift duration from two of the laborers. ~~During composting, obtain two personal samples of full shift duration, or if necessary, split shift duration from the windrow turning machine operator during the first or second week into the composting process during turning of the windrow. During composting, obtain two area samples from inside the composting facility of full shift duration.~~ Estimate ~~8~~ 4 samples for analysis (~~8~~ 2

CDS 8/17/97

FCR PS004

samples plus 2 blanks).

4.3.1 Procedure

To obtain a full shift sample of eight hours (hr) of 720 L air volume, the flow rate of the pump will be adjusted to 1.5 L/min and verified using a factory calibrated electronic bubble-tube calibrator with a capacity to 4 L/min. If split shift samples of four hour duration are obtained, the pump will be adjusted to 3.0 L/min. Prior to calibration, the temperature, pressure, and relative humidity will be recorded on a calibration log sheet at the sampling site. Both end caps of a labeled filter cassette will be removed and inserted into the filter cassette holder. The sampling train will be assembled. It will consist of high-flow pump with tygon tubing connected to a tube holder. After assembly, the sampling pump with sampling train attached, with the addition of a moisture trap will be checked for calibration to 1.5 L/min or 3.0 L/min depending on the sample duration.

The pre-sampling flowrate (Q_{pre}) will be determined using the electronic bubble-tube calibrator based on the average result of three measurement trials and recorded on the calibration log sheet.

The filter cassette holder containing a labeled filter cassette will be positioned vertically and attached to the worker within the breathing zone, and the air sampling pump will be secured to the belt of the worker for personal sampling. ~~The sampling train will be positioned and secured to a step ladder approximately 1.5 m above the floor for area sampling.~~ X X CWS 8/17/97

At the sampling site, the sampling pump will be turned "ON" and start time recorded. After a specified time, the pump will be turned "OFF" and stop time recorded. After sampling, the sampling train will be removed from the worker and the post-sampling calibration flow rate (Q_{post}) data obtained and the data recorded on the calibration log sheet. Q_{post} will be checked to make sure its value is within 10% of Q_{pre}. The average flow rate (Q_{avg}) will be calculated based on the average of the pre- and post- sampling flow rates and recorded on the calibration log sheet. Q_{avg} becomes the actual flow rate in the field (Q_{act}) and is corrected in the field to standard flow rate (Q_{std}), where standard temperature and pressure equal 25° C (298 Kelvin (K)) and 760 mm Hg (Pressure (P), respectively. Q_{std} is calculated from the following equation and the value recorded on the calibration log sheet:

$$Q_{std} = Q_{act} \times (298/T) \times (P/760)$$

The filter cassette holder will be removed from the holder and the sample media label checked and the cassette end caps will be custody sealed, wrapped in protective covering, and placed in a cooler filled with blue ice right-side-up. The blue ice will maintain storage temperatures of about 4 °C during shipment to the laboratory. A Chain-of-Custody form will be completed and attached to the cooler.

One set of negative controls (field blanks) for every ten collected samples will be prepared. A set of negative controls will be prepared by assembling the sampling train with an opened cassette inserted into the filter cassette holder, followed by removal of the cassette without activating the sampling pump.

4.3.2 Sample Analysis

At the laboratory, the samples will be analyzed per NIOSH Method 7300 for metals scan using a Graphite Furnace Atomic Absorption (GFAA) Spectroscopy. Analytes include aluminum, cadmium, iron, nickel, antimony, chromium, lead, arsenic, cobalt, zinc, beryllium, copper, and magnesium. The analysis will be completed in accordance with Lyle Environmental Management, Inc., Standard Operating Procedure (SOP) (SOP, 1991).

The concentration (C), of analyte in the air volume sampled (V) in L will be calculated from the following equation:

$$C\ (mg/m^3) = \frac{[Ws\ (mg) - W_b\ (mg)] \times 10^3}{V\ (L)}$$

where:

C = concentration of analyte in air, in mg/m^3
W_f = mass of analyte on the sampled filter, in mg
W_b = mass of analyte found on the blank filter (if any), in mg
V = volume of air sampled, in L

4.3.3 Data Analysis

The laboratory will report analysis results in mg/m^3 for each detected constituent.

4.4 Organic Compounds

Time-integrated area air sampling for hydrocarbons using personal air sampling pumps will be performed by the MK SSHO during the composting process to determine what, if any, of the hydrocarbon constituents may be present and their levels. Sample collection and analysis will be completed in accordance with the following methods: (1) NIOSH 1500 for hydrocarbons, (2) NIOSH 1501 for aromatic hydrocarbons, and (3) NIOSH 1003 for halogenated hydrocarbons.

During the composting process, obtain two area samples of full shift duration **inside** of the structure and two **outside** of the structure (representing background) for each of the three methods ~~approximately one week into the composting process~~. Area samples inside of the composting structure during active composting will be obtained as a basis for design and verification of breathing zone sampling strategies if determined to be necessary. The area samples will be of full shift duration, obtained inside of the compost building near the compost piles, but far enough so as not be hit by the windrow turner machine and any of the compost thrown from its mixing flails. The sample pump and media will be ~~secured to the portable step ladder at~~ approximately 1.5 meter (m) above the floor. For each method, estimate 4 samples for analysis (12 samples plus 3 blanks) for a total of 15 samples.

CWS 5/7/97

4.4.1 Procedure

To obtain a full shift sample of eight hours (hr), the flow rate of the pump will be adjusted to required flowrate listed below and verified using a factory calibrated electronic bubble-tube calibrator with a capacity to 4 L/min.

a. NIOSH 1500 - volume of 4 L, flowrate of ≤ 0.20 L/min based on n-hexane.

b. NIOSH 1501 - volume of 30 L, flowrate of ≤ 0.20 L/min based on benzene.

FCR PS004

c. NIOSH 1003 - volume of 60-70 L, flowrate approximately 0.14 L/min.

Prior to calibration, the temperature, pressure, and relative humidity will be recorded on a calibration log sheet at the sampling site. Both end caps of a labeled solid sorbent tube will be removed using a tube breaker/capper and inserted into the tube holder. The sampling train will be assembled. It will consist of high-flow pump with tygon tubing connected to a tube holder. After assembly, the sampling pump with sampling train attached, with the addition of a moisture trap will be checked for the desired calibration.

The pre-sampling flowrate (Q_{pre}) will be determined using the electronic bubble-tube calibrator based on the average result of three measurement trials and recorded on the calibration log sheet.

The tube holder containing a labeled sorbent tube will be positioned vertically ~~and attached to a stop ladder~~ approximately 1.5 m above the floor for area sampling. CWS 8/17/

At the sampling site, the sampling pump will be turned "ON" and start time recorded. After a specified time, the pump will be turned "OFF" and stop time recorded. After sampling, the sampling train will be removed from the worker and the post-sampling calibration flow rate (Q_{post}) data obtained and the data recorded on the calibration log sheet. Q_{post} will be checked to make sure its value is within 10% of Q_{pre}. The average flow rate (Q_{avg}) will be calculated based on the average of the pre- and post- sampling flow rates and recorded on the calibration log sheet. Q_{avg} becomes the actual flow rate in the field (Q_{act}) and is corrected in the field to standard flow rate (Q_{std}), where standard temperature and pressure equal 25° C (298 Kelvin (K)) and 760 mm Hg (Pressure (P), respectively. Q_{std} is calculated from the following equation and the value recorded on the calibration log sheet:

$$Q_{std} = Q_{act} \times (298/T) \times (P/760)$$

The sorbent tube will be removed from the holder, the label checked and the end caps placed in position and custody sealed, wrapped in protective covering, and placed in a cooler filled with blue ice right-side-up. The blue ice will maintain storage temperatures of about 4 °C during shipment to the laboratory. A Chain-of-Custody form will be completed and attached to the cooler.

ACR PS001

chill factor must be considered. The first symptoms of hypothermia are uncontrolled shivering, the sensation of being cold; the heartbeat slows and sometimes becomes irregular; the pulse weakens and blood pressure changes. Severe shaking or rigid muscles caused by bursts of energy change the body chemistry. Vague or slowed speech occurs; memory lapses, incoherence and drowsiness then occur. As core temperature continues to drop, listlessness, confusion and little attempt to keep warm commences. Pain in the extremities is felt. As exhaustion sets in, the body's ability to contract blood vessels is diminished, and rapid loss of heat and cooling begins.

Frostbite can occur without hypothermia when the extremities do not receive sufficient heat from central body stores. This can occur because of inadequate circulation and/or insulation. This condition results in damage to and loss of tissue. The most vulnerable parts of the body are the nose, cheeks, ears, fingers and toes. Damage from frostbite can affect the outer layer of skin only, or it can include the tissue beneath the outer layer. Damage from frostbite can be serious; scarring, tissue death and amputation are all possibilities. The symptoms of frostbite include: 1) The skin changes color to white or grayish-yellow, progresses to reddish-violet and turns black as tissue dies; 2) Pain may be felt at first, but subsides; 3) Blisters may appear; 4) The affected part is cold and numb; and 5) The skin has a waxy appearance.

To prevent cold stress, proper clothing must be worn. It is important to preserve the air space between the body and the outer layer of clothing to retain body heat. Refer to Section 7.2.6 for more guidance on heat and cold stress management.

2.5.4 Excavations

Open excavations and trenches present a hazard from falling into the excavation and/or side wall collapse while personnel are near or inside the excavation. To minimize exposure risk, the excavation work site will be barricaded ~~with orange snow fence~~ and signs posted. ~~Refer to MK Project Procedure PHSP 05.4 for specific excavation requirements.~~ The deepest excavation on this project may approach slightly more than 3 feet. OSHA 1926.650 Subpart P - Excavations and Corps of Engineers requirements (EM 385-1-1, Section 25) for sloping or shoring are not anticipated as necessary. When excavations are completed near building sidewalls and foundations, ~~an MK engineer~~ will assess potential collapse scenarios and specify any control requirements (e.g. shoring).

Positive identification of underground utilities and services is required at least 24 hours prior to any excavation, trenching or penetrations. An Excavation and Trenching Permit application must be submitted at least seven days prior to any excavation activities. The MK Project Manager (PM) will be responsible for obtaining this permit through the NSWC Crane Public Works Department (PWD). Part of this permit process will include a UXO

a competent excavation person

fcf 15004

survey by the NSWC representative. ~~Regardless of the size of the trench,~~ MK will have a designated competent person who will evaluate all excavations and trenches on a daily basis ~~regardless of whether personnel will enter~~. Inspections shall be recorded in a log book ~~and~~ field inspection checklists. X

or

2.5.5 Hazardous Energy Control (Lockout/Tagout)

Ground Fault Circuit Interrupters (GFCIs) will be installed on all portable electrical equipment and installations in accordance with EM 385-1-1 Section 11.C.05. All extension cords shall have GFCI protection and shall be inspected and determined to be free of cracks or frays.

Any system where the potential exists for unexpected energizing, start-up, or release of kinetic or stored energy during servicing and maintenance resulting in injury or damage shall be energy isolated in accordance with EM 385-1-1 Section 12, 29 CFR 1910.147~~, and PHSP 01.1~~. The MK Site Superintendent shall be responsible for verifying adequacy of all lockout/tagout installations and notifying all affected personnel. The MK Site Superintendent has the responsibility for implementing energy control measures. The PWD will provide energy control services on Mine Fill A utilities and process equipment if necessary. MK will provide their own energy control services on Bioremediation facility equipment and processes.

In addition, energy controls apply to motorized heavy equipment and process equipments and the following requirement applies. At a minimum, during service and maintenance of motorized equipment, the key shall be removed and in possession of the service or maintenance person and a "Do Not Operate" tag signed by this person shall be displayed near the start-up controls. Pre-operational checks and maintenance requirements on process equipments, including energy control will be incorporated into checklists.

2.5.6 Fire and Explosion

An Unexploded Ordnance Survey (UXO) will be required prior to subcontractor mobilization and may continue throughout the excavation process. The UXO Survey will be conducted by NSWC personnel.

NSWC Fire Services

No hot work or open flames will be allowed in the work area without a Hot Work Permit obtained through the ~~MK SSHO~~. Hot Work Permitting will be coordinated through the base Fire Department. Flammable and combustible fuels for heavy equipment shall be stored and dispensed in accordance with NFPA 30, the Flammable and Combustible Liquids Code. At least two 20 lb or equivalent "ABC" multi purpose fire extinguisher shall be maintained for fire response at the entrance to each Contamination Reduction Zone

FCR/5004

manufacturer's instructions before use each day, and calibrated yearly by the manufacturer or other qualified personnel. Records of the response check, maintenance, and annual calibration will be maintained on-site.

Colorimetric indicator tubes (e.g., MSA tubes) for organic vapors shall be used at the MK SSHO's discretion. ~~whenever the PID instrument measures breathing zone concentrations of organic gases or vapors exceeding 5 parts per million (ppm) PID equivalents greater than background concentrations for time period greater than five minutes or as deemed necessary by the MK SSHO.~~ Colorimetric tubes are used to further characterize the potential exposure. Generally, the frequency of sampling with indicator tubes is driven on the monitoring results of the PID for organic compounds. Based on volatile concentrations reported in the soil sampling results, VOC's are not expected to be a problem. The MK SSHO will have available tubes for benzene, xylene, ethylbenzene, toluene, trichloroethane, and petroleum hydrocarbons.

Additional compounds that will be measured using colorimetric indicator tubes include the following: ~~hydrogen sulfide~~, carbon dioxide, ~~carbon monoxide~~, and ammonia, nitrogen dioxide, nitrous fumes, and formaldehyde. If levels are detected above action levels, an immediate assessment of job controls will be made, and appropriate modifications incorporated if necessary. See Section 7.2.6 on measurement location and frequency.

7.2.2 Airborne Dust

A direct-reading, real-time instrument capable of detecting airborne dust ~~(MIE Miniram)~~ will be used, based on visible observations of excessive dust. Readings will be taken at locations that reflect approximate concentrations of airborne dust in the breathing zone of project personnel. Results of the airborne dust monitoring will be documented. If necessary, the level of PPE used by personnel will be modified or engineering controls enhanced. The direct-reading, real-time monitoring equipment will be "response checked" according to the manufacturer's instructions before use each day, and calibrated by the manufacturer or other qualified personnel yearly. Records of the response check, maintenance, and annual calibration will be maintained on-site. When such monitoring is conducted and the results are greater than 10 mg/m^3 total dust concentrations, immediate steps will be taken to determine the cause and modify site operations.

7.2.3 Perimeter Monitoring

Perimeter monitoring to evaluate emissions of airborne dust in the Support Zone will be performed periodically during soil excavation, as warranted. When such monitoring is conducted and results are greater than 1.0 mg/m^3, immediate steps will be taken to determine the cause and modify site operations.

FCR/S001

and/or reduction of the exposure period are among the special precautions which should be considered.

Cold weather clothing requirements shall follow the guidance listed in Section 06.J.09 of EM-385-1-1. If work is performed continuously in the cold at an equivalent chill temperature or below 20 °F, heated warming shelters shall be made available nearby the work area and the workers encouraged to use these shelters at regular intervals. A cold weather work/warm-up regimen shall be established when outside ambient temperature is less than a -15 °F in accordance with Table 3 of the ACGIH booklet in the Cold Stress section.

7.2.6 Carbon Dioxide, Hydrogen Sulfide, and Other Chemical Monitoring

At the Bioremediation Facilities during active composting, real-time monitoring using colorimetric indicator tubes for carbon dioxide and hydrogen sulfide will be performed periodically by the MK SSHO in the buildings housing the windrows. If carbon dioxide levels exceed 4,000 ppm inside of the structure, the structure will be evacuated and action taken to vent the structure and maintain a level below 3,000 ppm. ~~The ceiling for hydrogen sulfide is 10 ppm~~. ~~Evacuation from the structure shall occur at 5 ppm, and action shall be taken to vent the structure and maintain a level below 5 ppm~~. These compounds will be measured in the cab of the windrow turner machine during turning of the windrow approximately twice per week for the first two weeks. These same compounds will be measured inside of the compost buildings at two locations in the building once per day for the first week of active composting.

Also during active composting, real-time monitoring will be conducted periodically to determine if any detectable levels of methane, carbon monoxide, nitrogen dioxide, nitrous fumes, ammonia, and formaldehyde are present. Monitoring will be completed using colorimetric indicator tubes, except for methane where the multi-gas meter will be used. The multi-gas meter will also be used for hydrogen sulfide and carbon monoxide in addition to the colorimetric indicator tubes. These compounds will be measured in the cab of the windrow turner machine during turning of the windrow approximately twice per week for the first two weeks. These same compounds will be measured inside of the compost buildings at two locations in the building once per day for the first week of active composting. If detectable levels are encountered, then full-shift time integrated samples may be obtained to better quantify the occupational exposure level, and current controls (engineering, administrative and PPE) will be assessed to determine there adequacy. If levels are detected above action levels, an immediate assessment of job controls will be made, and appropriate modifications incorporated where necessary.

FCR-PS004

7.3 AIR SAMPLING

7.3.1 Organic Compounds

Time-integrated area air sampling for hydrocarbons using personal air sampling pumps will be performed by the MK SSHO during the composting process to determine what, if any, of the hydrocarbon constituents may be present and there levels. Sample collection and analysis will be completed in accordance with the following methods: **(1) NIOSH 1500 for hydrocarbons, (2) NIOSH 1501 for aromatic hydrocarbons, and (3) NIOSH 1003 for halogenated hydrocarbons.**

7.3.1.1 Material and Method

a. NIOSH 1500 - collect on solid sorbent tube, coconut shell charcoal, 100 mg/50 mg; volume of 4 L, flowrate of ≤ 0.20 liter per minute (LPM) based on n-hexane. Analyze by Gas Chromatography Flame Ionization Detector (GC/FID), if hit, analyze with Mass Spectrometry (MS) and provide readout against computer library.

b. NIOSH 1501 - collect on solid sorbent tube, coconut shell charcoal, 100 mg/50 mg; volume of 30 L, flowrate of ≤ 0.20 LPM based on benzene. Analyze GC/FID, if hit, analyze with MS and provide readout against computer library.

c. NIOSH 1003 - collect on solid sorbent tube, coconut shell charcoal, 100 mg/50 mg; volume of 60-70 L, flowrate approximately 0.14 LPM. Analyze by GC/FID, if hit, analyze with MS and provide readout against computer library.

7.3.1.2 Sampling Strategy

During composting process two "area" samples of full shift duration will be obtained **inside** of the structure and two **outside** of the structure representing background for each of the three methods ~~approximately one week into the composting process~~. Area samples inside of the composting structure during active composting will be obtained as a basis for design and verification of breathing zone sampling strategies. The area samples will be of full shift duration, obtained inside of the compost building near the compost piles, but far enough so as not be hit by the windrow turner machine and any of the compost thrown from its mixing flails. The sample pump and media will be secured ~~to the portable step ladder~~ at approximately 1.5 meter (m) above the floor. Area samples should be biased by representing the worst-case exposure since no one will be in the structure during turning of the windrows

FCR 15004

once "active" composting begins except for the windrow machine operator. ~~The windrow machine operator will be working from an enclosed cab with inlet air filtration. One or two~~ personals samples may be obtained from the ~~windrow machine operator, however, the time to complete two to three passes through the compost piles is minimal. Thus sufficient sampling time may not be obtainable~~. For each method, estimate 4 samples for analysis (12 samples plus 2 blanks) for a total of 14 samples.

7.3.2 Metals

Time-integrated air sampling for metals using personal air sampling pumps will be performed by the MK SSHO during soil excavation and screening~~, and during composting when the windrows are mixed to determine what, if any, of the metal analytes may be airborne and there levels~~. Sample collection and analysis will be completed in accordance with OSHA Method ID-125 or NIOSH Method 7300 for metals scan with analysis by Inductively Coupled Plasma (ICP) or Graphite Furnace Atomic Absorption (GFAA) Spectroscopy.

7.3.2.1 Material and Method

OSHA ID-125 - collect on 0.8 µm cellulose ester membrane (MCE) filter with support pad with 3-piece 37 mm clear styrene acrylonitrile (SAN) cassette. Sample Volume = 720 L at 1.5 LPM. Analytes include aluminum, cadmium, iron, nickel, antimony, chromium, lead, arsenic, cobalt, zinc, beryllium, copper, and magnesium.

7.3.2.2 Sampling Strategy

During soil excavation and screening: (1) obtain two "personal" samples of full shift duration from maximally exposed individuals completing soil excavation and screening tasks~~, and during composting (2) obtain two "personal" samples from the windrow turning machine operator during first or second week into the composting process during turning of the windrow; and (3) obtain two "area" samples from inside the composting facility of full shift duration. Estimate 8 samples for analysis (6 samples plus 2 blanks)~~. Estimate 4 samples for analysis (2 samples plus 2 blanks)

7.3.3 Explosives Residues

Time-integrated air sampling for explosive residues as airborne aerosols using personal air sampling pumps will be performed by the MK SSHO during soil excavation and screening, and during composting when the windrows are mixed and composting process parameters are monitored. Sample collection will be based on OSHA Method

FCRPS004

44 and sample analysis will be conducted in accordance with EPA Method 8330 using High-Pressure Liquid Chromatography (HPLC) Analysis.

7.3.3.1 Material and Method

OSHA 44 - collect on sorbent and filter tube, 270/140 XAD-2 and glass fiber filter, OSHA Versatile Sampler (OVS) Tube. Volume = 240 L, rate = 0.5 LPM, time = 8 hour. Analysis by HPLC in accordance with EPA Method 8330 providing a scan for specific analytes and isomers. Specific analytes include HMX, RDX, TNT, 1,3-DNB, TNB, and 2,4-DNT

7.3.3.2 Sampling Strategy

During soil excavation and screening at the Mine ~~Field~~ Fill A facility, six personal samples of full shift duration, or if necessary, split shift duration will be obtained from two of the laborers. The laborer's are considered the maximally exposed individual for this task. At the composting facility, six personal samples of full shift duration, or split shift if necessary, will be obtained from the Environmental Technician. The Environmental Technician is considered the maximally exposed individual during the composting process since he will be responsible for supervising the building of the windrows, applying water during mixing and refining of the windrows, and for monitoring process parameters.

~~The construction superintendent may also be in the building during windrow building assisting the Environmental Technician. If this is the case, personal samples of full shift or split shift will be obtained~~. Four to six area samples inside of the composting structure during active composting will be obtained as a basis for design and verification of breathing zone sampling strategies. The area samples will be of full shift duration, obtained inside of the compost building near the compost piles, but far enough so as not be hit by the windrow turner machine and any of the compost thrown from its mixing flails. The sample pump and media ~~will be secured to the portable step ladder at~~ approximately 1.5 m above the floor. Area samples should be biased by representing the worst-case exposure since no one will be in the structure during turning of the windrows once "active" composting begins except for the windrow machine operator. ~~The windrow machine operator will be working from an enclosed cab with inlet air filtration. One or two personals samples may be obtained from the windrow machine operator, however, the time to complete two to three passes through the compost piles is minimal. Thus sufficient sampling time may not be obtainable.~~

Table A-7
Airborne Contaminant Response Criteria

Contaminant	Level	PPE	Monitoring Frequency	Actions Taken
Volatile organic compounds. Both direct reading and time integrated samples will be obtained. ~~Time integrated samples will be obtained at the compost facilities. Level C PPE will be used at excavation sites and the composting facility. APR's selected are HEPA but can be modified to include organic cartridges depending on VOC levels.~~ Frequency of monitoring is subjected to change as field experience is obtained.	No more than 5 ppm above background, no benzene detected	Level D or Modified Level D	~~Prior to each shift and reentry following 30 minute vacancy or as warranted~~ DURING INITIAL EXCAVATION AND COMPOST TURNING.	Continue periodic monitoring
	Greater than 5 ppm above background but less than 10 ppm above background. No benzene detected, no Action Level for any organic exceeded.	Level D or Modified Level D	~~At least once every hour, when change in operation occurs, or when requested by workers~~ Prior to Each shift.	Monitor for benzene or other organics. Continue periodic monitoring
	Greater than 10 ppm above background or benzene detected or Action Level exceeded for any organic.	To be determined by SSHO	To be determined by SSHO	Stop work and notify SSHO

FCAP5004

Table A-9
Monitoring and Sampling Requirements

Site	Activity	Monitor						Sample		
		VOC	Dust	Oxygen and % LEL	Perimeter (Dust)	Noise	Heat Stress	VOC	Metals	Explosives
SWMU 12/14	1. Excavate, screen, and load soils for Composting	Y	Y	O	O	Y	O	N	Y	Y
Start-up and Operations of Bioremediation Facility	1. Offload and grind amendments.	N	Y	N	N	Y	O	N	N	N
	2. Load amendment blend in windrows.	N	Y	N	N	Y	O	N	N	N
	3. Offload contaminated soil into windrows.	Y	Y	Y	N	Y	O	N	N	N
	4. Turn and mix windrows.	Y	Y	Y[2]	N	Y	O	Y	~~Y~~ N	Y

Y = Yes, O = Optional at discretion of SSHO, N = Not required

Notes:

1 = In addition to LEL and O_2, conduct periodic monitoring for other organics, CO_2, CO, Hydrogen Sulfide, ammonia, nitrogen dioxide and nitrous fumes, and formaldehyde levels inside of the Composting Facility using direct reading instrumentation and colorimetric indicator tubes as described in Section 7. Occupational exposure limits are presented in Table A-2.

2 = Bioaerosol sampling campaign parameters are defined and specified in Section 7. Suggested occupational exposure limits are presented in Table A-2.

X 8/17/97

ACTIVITY HAZARD ANALYSIS (AHA)

Activity: General Soil Excavation Activity and Transport for Composting, SWMU 12/14		Analyzed By/Date: Frank J. Petrik 4/7/97	Reviewed By/Date:
1.0 Principal Steps	**Potential Hazards**	**Recommended Controls**	
1.1 Walk area down, establish work zone, haul routes, get permit and begin soil excavation.	1.1a. Contact with underground utilities or process piping. 1.1b. Contact with unexploded ordnance. 1.1c. Struck by and struck against physical objects during clearing and grubbing. 1.1d. Biological; weeds, snakes, spiders; other plant life. 1.1e. Contact by inhalation, direct contact or ingestion of chemical contaminants.	1.1a. Excavation and Trenching Permit completed and in place at work site. Utility locates coordinated by MK onsite PM through the NSWC PWD. MK PE must assess undermining of structural supports. 1.1b. MK PM to reverify with NSWC the necessity for UXO Survey. 1.1c. MK SSHO to lead Plan of Day meeting reviewing clearing and grubbing safety based on EM-385-1 Section 31. 1.1d. MK SSHO to discuss specific biological hazards awareness with NSWC Medical and/or Safety/IH department and plan for and communicate findings at POD and/or Pre Entry Briefs. 1.1e. ~~Level C~~ Modified Level D PPE specified. Personal air sampling required. Dust control by wetting required. Personal decontamination required.	
1.2 Screen Soil, load and haul activity. Note: see worksheet on Screener.	1.2a. Struck by and struck against physical objects during load and haul. 1.2b. Spread of contaminated materials.	1.2a. Preplan work layout (Soil Excavation Map completed and posted). Access and Haul roads to be assessed against EM 385-1-1, Section 21.I by MK onsite PE. Backup alarms on all motorized heavy equipment and headlights on (haul truck only). **Emergency procedures and communications with haul trucks must be established.** 1.2b. Vehicle decontamination station and covered loads during transport. MK SSHO to assess decontamination and PPE *requirements from time load is covered, during transport and off* loading activities. Criteria reviewed at Pre-Entry Briefs.	
1.3 Equipment to be Used	**Inspection Requirements**	**Training Requirements**	
1.4 Heavy equipment for excavation and hauling. Screener and hand tools.	Daily, prior to use per manufacturer's recommendation.	OSHA 1910.120 40-Hour Training, 3 day OJT, 8 hours Supervisory. 8 hour Refresher, Site Safety and Health Plan (Project Kickoff), POD, Pre and Post Entry Briefs, OSHA Hazard Communication, Respirator.	

X CWS 8/17/97

FCN2001

PLF 115004

ACTIVITY HAZARD ANALYSIS (AHA)

Activity: SWMU "temporary" Decontamination Facility Operations, Personnel and Equipment.	Analyzed By/Date: Frank J. Petrik 4/7/97	Reviewed By/Date:

2.0. Principal Steps	Potential Hazards	Recommended Controls
2.1. Receive and place material at facility.	2.1a. Struck by and struck against. Material handling concerns.	2.1a. SWMU temporary Decontamination Facility to provide isolation and controlled access. Equipment must be secure or blocked. MK SSHO and Project Supervisor(s) to review material handling procedures to insure good practices and approved equipment is used which conforms to OSHA & EM-381 Section 28.I requirements.
2.2. Decontaminate Equipment using high pressure wash or hand scrubbing and/or automatic wash on vehicle tires and undercarriage.	2.2a. Contact with contaminated material and cross contamination; inhalation of airborne aerosols; contact with high pressure wash stream; unexpected movement of material to be decontaminated.	2.2a. modified Level ~~C~~ D PPE with face shield, modify per MK SSHO review. Secure items to be decontaminated. Visual inspect integrity of Facility's containment liners and containers used for waste waters. Personnel decontamination required including end of work shift showers at main decontamination facility.
2.3. Rock/Debris washing	2.3a. Same as 2.1a and 2.2a.	2.3a. Same as 2.1a and 2.2a.
2.4 Equipment to be Used	**Inspection Requirements**	**Training Requirements**
2.5. High pressure water wash with/without soap solution; other decontamination solutions; scrub brushes; material handling equipment and securing equipment.	Before use per manufacturers recommendation.	OSHA 1910.120 40-Hour Training, 3 day OJT, 8 hours Supervisory. 8 hour Refresher, Site Safety and Health Plan (Project Kickoff), POD, Pre and Post Entry Briefs, OSHA Hazard Communication, and Respirator.

x CWS 8/17/98

ACTIVITY HAZARD ANALYSIS (AHA)

Activity: Offload contaminated soils into windrows using end discharge Dump Truck and Self-Powered Swing Discharge Conveyor.	Analyzed By/Date: Frank J. Petrik 4/7/97	Reviewed By/Date:

3.0 Principal Steps	Potential Hazards	Recommended Controls
3.1 Position and secure discharge conveyor to Dump Truck and offload Dump Truck into conveyor for windrow development.	3.1a. Struck by and struck against physical objects during operation; caught in and caught by hazards.	3.1a. Preplan work layout. Insure conveyor is locked into position on Dump Truck. All machine guards in place and verified prior to operation. Backup alarms on all motorized heavy equipment. High visibility vests for workers.
	3.1b. Airborne aerosols; chemical and biological.	3.1b. Modified Level ~~C~~ D PPE. Air monitoring and sampling campaign per Section 7 of SSHP.
	3.1c. Noise and vibration.	3.1c. Sound Level Surveys conducted by MK SSHO.
	3.1d. Fire/Explosion	3.1d. Diesel Fueling operations conducted per manufacturers recommendation including daily inspection of equipment.

3.2 Equipment to be Used	Inspection Requirements	Training Requirements
3.3 Dump Truck and Conveyor.	Daily, prior to use per manufacturer's recommendation.	OSHA 1910.120 40-Hour Training, 3 day OJT, 8 hours Supervisory. 8 hour Refresher, Site Safety and Health Plan (Project Kickoff), POD, Pre and Post Entry Briefs, OSHA Hazard Communication, Respirator, Operator Training.

x CWS 8/17/97

FR 8/5/04

ACTIVITY HAZARD ANALYSIS (AHA)

Activity: Decontamination Facility Operations, Personnel and Equipment.	Analyzed By/Date: Frank J. Petrik 4/7/97	Reviewed By/Date:

7.0 Principal Steps	Potential Hazards	Recommended Controls
7.1 Receive and place material at facility.	7.1a. Struck by and struck against. Material handling concerns.	7.1a. Site Decontamination Facility to provide isolation and controlled access. MK SSHO and Project Supervisor(s) to review material handling procedures to insure good practices and approved equipment is used which conforms to OSHA and EM-381 Section 28.I requirements.
7.2 Decontaminate Equipment using high pressure wash or hand scrubbing and/or automatic wash on vehicle tires and undercarriage.	7.2a. Contact with contaminated material and cross contamination; inhalation oF airborne aerosols; contact with high pressure wash stream; unexpected movement oF material to be decontaminated.	Modified - D 7.2a. Level ~~C~~ D PPE with face shield, modify per MK SSHO review. Secure items to be decontaminated. Visual inspect integrity oF Facility's containment liners and containers used for waste waters. Clean side area established for worker's street clothes and approved respirator storage after cleaning and sanitizing.
	7.2b. Physical hazards associated with process equipment disassembly and dismantlement.	7.2b. Plan for decontamination to include PPE selection, energy control, material handling onsite, and waste management.

7.3 Equipment to be Used	Inspection Requirements	Training Requirements
7.4 High pressure wash with soap solution; other decontamination solutions; scrub brushes; material handling equipment and securing equipment. Personal showers; wash and change facilities.	Before use per manufacturers recommendation.	OSHA 1910.120 40-Hour Training, 3 day OJT, 8 hours Supervisory. 8 hour Refresher, Site Safety and Health Plan (Project Kickoff), POD, Pre and Post Entry Briefs, OSHA Hazard Communication, and Respirator.

X

CWS 8/12/9

KCL 15 COX

ACTIVITY HAZARD ANALYSIS (AHA)

Activity: Operation of Windrow Machine, turn and mix Windrows		Analyzed By/Date: Frank J. Petrik 4/7/97	Reviewed By/Date:
4.0 Principal Steps	**Potential Hazards**	**Recommended Controls**	
4.1 Diesel powered windrow/composter turning machine is driven into composting building to mix and reform the windrow piles.	4.1a. Struck by and struck against physical objects during operation; caught in and caught by hazards.	4.1a. Preplan work layout. All machine guards in place and verified prior to operation. Cab doors closed and cab ventilation system operating. High visibility vests for personnel in building when machine is operating. Standby personnel inside oF structure need to maintain safe distance away from mixing flails.	
	4.1b. Airborne aerosols; chemical and biological.	4.1b. Modified ~~Level C~~ D PPE. Air monitoring and sampling campaign per Section 7 oF SSHP.	
	4.1c. Noise and vibration.	4.1c. Sound Level Surveys conducted by MK SSHO.	
	4.1d. Fire/Explosion	4.1d. Diesel Fueling operations conducted per manufacturers recommendation including daily inspection oF equipment.	
4.2 Equipment to be Used	**Inspection Requirements**	**Training Requirements**	
4.3 Windrow Machine	Daily, prior to use per manufacturer's recommendation.	OSHA 1910.120 40-Hour Training, 3 day OJT, 8 hours Supervisory. 8 hour Refresher, Site Safety and Health Plan (Project Kickoff), POD, Pre and Post Entry Briefs, OSHA Hazard Communication, Respirator, Operator Training.	

X
CWS 8/17/4

ECKISCAY

ORIGINAL

NAVFAC Southern Division/ Morrison Knudsen Corporation	District II RAC

FIELD CLARIFICATION REQUEST (FCR)

Delivery Order No.: 4324-0009	**Subcontract No.:** 4324-	**FCR No.:** 4324-0009-FCR-PS005
Pilot Scale Operational Plan		Page 1 of 1

Reference Documents: Pilot Scale Operational Plan, Rev. 5 dated June 6, 1997

Problem / Change Description:

Approval is requested for the following changes:

1). SOP 6.0, Transport And Loading Soil Into Windrows
Marked pages 2 and 3 of 6. Changes include the option of stockpiling contaminated soil in a building at the Bioremediation Facility.

2). SOP 2.0, Sample Collection For Off-site Laboratory Analysis
Marked pages 1, 3, 4, 5, 6, 7, and 8 of 8. Changes include the addition of the Wiley Mill and sample splitter.

3). SOP 4.0, Amendment Proportioning And Mixing;; add the following statement to Section 5.0;
"The Amendment mixtures will normally be generated within the same work day that the soil addition is performed, however, the amendment mixtures may be generated no more than two days in advance of the soil addition." ok cw 8/7/97

Initiated by	Signature:	Organization: Morrison Knudsen	Date: 07/28/97

Resolution:

If this FCR affects a subcontract, indicate CID number: N/A

Approval by MK PE	Signature:	Date: 7/28/97	**Approval by ROICC/NTR or RPM**	Signature:	Date 8/22/97
Approval by MK PjM	Signature: D Ball	Date: 7/29/97	Additional Reviews: By/Date Christine D. Freeman NSWC Crane, EPD 8/25/97		
Approval by MK QC	Signature: Steven Cory	Date: 7/28/97	Some items previously modified for scope that FCR stands.		
Approval by MK REG SPT.	Signature: Steven Cory 7/c	Date: 7/28/97			

Regulator Approval/Notification Recommended:
Yes ☐ No ☐ Approved Carol Wittbrodt 8/12/97

A:FCRPS001.DOC

FCR PS005

1.0 PURPOSE

This procedure describes the methods which will be used to transport soil to the composting facility and load the soil into windrows for pilot scale testing.

2.0 SCOPE

This procedure applies to the Naval Surface Warfare Center, Crane, Indiana site for Bioremediation Facility pilot scale operations.

3.0 EQUIPMENT

The following equipment will be used to transport soil to the composting buildings and convey the soil to windrows for pilot scale testing:

3.1 Semi-Tractor and Live-Bottom Trailer

The semi-tractor is a Mack model 169CH613. The live-bottom trailer is a Red River model HS 236 102. The trailer is 43 feet long and has a minimum capacity of 48 cubic yards. It has a conveyor floor which is capable of discharging material out the rear of the trailer. The tractor-trailer rig will be used to transport soil to the composting facility.

3.2 Dump Conveyor

The dump conveyor is a specially designed piece of equipment that will be used to convey soil from the live-bottom trailer to the windrows. The unit attaches to the rear of the trailer via two swivel hooks and latches. The conveyor is self powered by a diesel engine mounted on the unit. Soil from the live-bottom trailer is discharged into a hopper on the dump conveyor and is then conveyed to the center of the windrow off the right side of the unit.

FCR/5005

4.0 SAFETY AND HEALTH PRECAUTIONS AND CONTROLS

1. **Follow explosives handling procedures as required by U.S. Navy.**

2. Use Level ~~C~~ Modified D PPE when off-loading contaminated soils into windrows and Modified Level D for set-up and preparation tasks associated with off-loading.

   ~~Add requirements for~~ Hearing protection may be required ~~here~~ based on results of sound level surveys.

3. Maintain clear distance of approximately 15 feet and wear high visibility vest when working around moving machinery. Stay in equipment operators line-of-sight.

4. Ensure all rotating equipment guards are in place and functional prior to equipment operation.

5.0 PROCEDURE

During clean soil pilot testing, soil will be excavated from the borrow pit ~~located south of the composting facility and~~ and screened; *during contaminated soil pilot* testing, soil will be excavated from Mine Fill A near building #153 and screened. Excavation and screening of soil from Mine Fill A is described in Appendix E of this Pilot Scale Operational Plan.

5.1 Transporting Soil

Screened, clean soil will be transported from the borrow pit to the composting facility using the tractor and live-bottom trailer. Screened, contaminated soil will be transported from Mine Fill A using the semi-tractor and live-bottom trailer. Soil at NSWC Crane averages 1.1 tons per cubic yard. 15 cubic yards of soil are required for each pilot scale recipe. This 15 cubic yards equates to 16.5 tons of soil per recipe. ~~Each trailer load of soil will be weighed at the truck scales and adjusted if necessary to 16.5 tons (soil weight)~~. The empty weight of the tractor-trailer rig is 16.3 tons. Loaded with ~~10.5~~ 16.5 tons of soil, the total load of 32.8 tons will not exceed the 36 ton capacity of bridges on the NSWC Crane base.

FCR PSCCS

Figure 6-2 in Section 6.0 of this Pilot Scale Operational Plan illustrates the travel path from Mine Fill A to the composting facility. Prior to leaving the composting facility for another load of soil, the exterior of the tractor-trailer rig will be decontaminated at the equipment decontamination facility located at the composting facility exit as discussed in SOP 3.0. This decontamination activity will be performed during the clean soil test as a practice even though the equipment will not be contaminated at that time.

Screened soil may be transported and stockpiled in the buildings at the Bioremediation facility if necessary. Stockpiled soil will be covered to prevent dust emanating from.

5.2 Loading Soil into Windrows

The general sequence of activities for loading soil into the windrows is as follows:

1. The semi-tractor trailer rig (volume and) loaded with soil arrives at the composting facility and the weight of soil is recorded on the *Record of Recipe* form **(Field SOP 4.0, ~~Figure SOP 4-3~~)**, in Appendix G for the recipe to be generated. At this time, the *Record of Recipe* form has already been partially completed during the amendment proportioning and mixing procedure, **Field** SOP 4.0, for this specific recipe.

2. The dump conveyor is connected to the rear of the trailer via two swivel hooks and latches.

3. The semi-tractor trailer enters the compost building pulling the dump conveyor.

4. Once positioned to the left of the first amendment pile, the engine of the dump conveyor will be started.

5. Next the bottom flap at the rear of the trailer will be opened (to a minimum of) ~~approximately~~ six inches.

6. Then the trailer and dump conveyors will be activated. Soil will begin discharging into the dump conveyor and onto the amendment windrow. Care should be taken not to transfer excess soil onto the dump conveyor and causing a dump conveyor overload. The speed of the dump conveyor should always be slightly faster than the trailer discharge conveyor.

FCRPS005

7. As the soil begins to pile up about two feet above the top of the amendments, the tractor-trailer will be driven forward at a slow rate of speed such that a uniform two feet high pile of soil is maintained until the trailer is emptied. See Figure 6-3 in Section 6.0 of this Pilot Scale Operational Plan.

8. If the trailer is emptied prior to reaching the end of the windrow, the soil will be adjusted ~~with the skid-steer loader~~ to uniformly distribute it along the full length of the windrow.

9. If the conveyor reaches the end of the windrow prior to being emptied, the trailer will be backed up and the balance of soil will be distributed along the windrow.

10. The height of soil as it is discharged will be adjusted as necessary on subsequent windrows such that the trailer is emptied at the same time as it reaches the end of the windrow.

11. Once the trailer is emptied, the conveyor will be disconnected and the tractor-trailer will proceed to the vehicle decontamination facility.

12. The exterior of the tractor-trailer will be decontaminated. ~~when~~ Prior to Exiting the facility.

13. The tractor-trailer will return to the excavation site or Stockpile Area inside one of the buildings at the Bioremediate Facility for another load of soil.

14. This process will be repeated until all windrows have been loaded with soil.

Drawings P-102 and P-103 in Appendix C of this Pilot Scale Operational Plan provide the travel path for loading soil into the windrows.

FC12PS005

1.0 PURPOSE

This procedure describes the methods which will be used to establish sampling locations and collect compost samples for off-site laboratory analysis. Sampling requirements for on-site monitoring and collection are described in Field SOP 1.0 of this appendix.

2.0 ESTABLISH SAMPLING AND MONITORING LOCATIONS

This section describes the procedure to be followed for establishing the locations for collecting samples for off-site laboratory analyses. Field measurement locations are described in Field SOP 1.0.

2.1 Tools and Materials

The following tools and materials are required to establish sampling locations:

measuring tape (50-foot minimum)
dedicated 4 ft 7 in.-long measuring stick marked with 6-inch intervals
dedicated pin flags or stakes
field logbook
indelible pen

2.2 Establish Sample Locations

Cross-section Locations
Each windrow will be divided into four cross-sections, labeled A through D as shown in Figure 1-1 **and Figure 1-1A,** of this SOP. Cross-section locations will be measured and marked after each time the windrow is turned. The following procedure will be used to establish cross-section locations:

Insert 1. (from page 3 of 8)

~~1.~~ 2 Locate cross-section A by measuring a distance of 5 feet from the east end of the windrow along the long axis. Place a pin flag or stake on top of the pile at this location.

~~2.~~ 3 Locate cross-section D by measuring a distance of 5 feet from the west end of the windrow along the long axis. Place a pin flag or stake on top of the pile at this location.

FCR PSCC5

Insert Figure 1-1 **and Figure 1-1A** Windrow Sample Locations

FCR PSOC 5

windrow size (height, Length, & width)

OR on the Daily Process Data form.

~~3.4~~ Measure the distance between the marker at cross-section A and the marker at cross-section D. Document the ~~measurement~~ in the field logbook along with date, time, and windrow number. Divide the measured length by three. Take the resulting value and measure that distance (to the nearest 6 inches) from cross-section A towards the center of the pile along the long axis. This is the location of cross-section B. Place a pin flag or stake on top of the pile at this location. Locate cross-section C between cross-sections B and D, an equal distance from both. Place a pin flag or stake on top of the pile at this location.

1.

~~4.5~~ Double check the measurements by making sure the distances between cross-sections A and B, B and C, and C and D are all equal within ± ~~3~~ 6 inches; and cross-sections A and D are each located 5 feet from the ends of the windrow.

Sample locations

~~Six~~ **Three** sample locations will be established at each of the four cross-sections. **The samples will be taken in the following order:**

1. **In-situ reading of Oxygen.**
2. **In-situ reading of Temperature.**
3. **Sample withdrawn for on-site laboratory analysis of moisture and pH.**
4. **Sample withdrawn for off-site laboratory analysis.**

The following procedure will be used to locate the sample locations:

1. Sample location 1 is located on the longitudinal centerline of the pile at a depth of 3 feet below the top surface. ~~Hold the marked measuring stick perpendicular to the top of the pile and insert to the 3 foot mark.~~

FOR PS005

2. Sample location 2 is located on the south side of the pile at a depth of 2.5 feet perpendicular to the surface. Lay the 4 ft 7 in. measuring stick on the south side of the pile from the ground surface up, and mark the point on the pile at the end of the stick. ~~Then hold the measuring stick perpendicular to the side of the pile and insert to the 2.5 foot mark.~~ X

3. Sample location 3 is located on the north side of the pile at a depth of 2.5 feet below the surface. Lay the 4 ft 7 in. measuring stick on the north side of the pile from the ground surface up, and mark the point on the pile at the end of the stick. ~~Then hold the measuring stick perpendicular to the side of the pile and insert to the 2.5 foot mark.~~ X

3.0 Sample Collection

This section describes the procedure to be followed for collecting sample material from the compost windrows for off-site laboratory analyses.

3.1 Tools and Materials

~~hand auger~~
stainless steel push tubes with sleeves or split spoon & and/or hand auger X
measuring tape
dedicated 4 ft 7 in.-long measuring stick marked with six-inch intervals
stainless steel bowls
stainless steel spoons
appropriate sample containers (see Section 4.0 of the approved Pilot Scale QAPP)
field logbook
indelible pen
sample tags
sample labels
tape
coolers
preservatives
chain of custody forms
plastic bags ~~for placing sample containers in~~ X
sealable, disposable

FCRPS005

All sample extraction tools which come in contact with the sample shall be decontaminated prior to use as described in Field SOP 3.0.

3.2 Sample Collection Procedure

Samples for off-site laboratory analysis will be discrete as described in Section 4.0 of the approved Pilot Scale QAPP. Discrete samples will be collected from locations 1, 2, and 3 at each cross-section, using a hand auger. Table 1-1 shows the Process Parameter Sampling and Analysis Schedule for the compost material. The following procedure shall be used to collect discrete samples at each cross-section:

1. Use the measuring tape and measuring stick to locate cross-sections A through D, and sample locations 1, 2, and 3 at each cross-section, as described in Section 2.2 above.

2. Insert the ~~auger~~ auger/**push tube** into and perpendicular to the pile at each sample location. ~~**Push the tube to the designated depth (3 feet for sample location 1, and 2.5 feet for sample locations 2 and 3) or a little deeper to insure a complete sample at that depth.** Remove the material between the surface and the designated depth at each sampling location, placing the removed material on top of the pile and next to the cross-section location, until the auger has reached the designated depth (3 ft for sample location 1, and 2.5 feet for sample locations 2 and 3).~~ ADD BACK IN. Care shall be taken so as not to collapse the hole or have surface material fall in.

3. ~~Fill the auger with the material at the designated sampling depth.~~ Remove the ~~auger from the borehole~~ ~~**push tube**~~ and extract the material ~~from~~ IN the ~~auger~~ **tube from the appropriate depth location**. Place the extracted material directly into the ~~appropriate sample container using a stainless steel spoon or scoop~~. Preclabled ~~sealable~~ sealable plastic bag.

4. Follow the sample **labeling, tagging,** identification, chain of custody, and shipping and handling procedures described in Section 4.0 of the approved Pilot Scale QAPP. Document all sampling activities in the field logbook.

5. ~~Place placing the remaining sample on top of the pile and next to the cross-section location.~~ Leave in.

The samples will be taken to the on-site laboratory for preparation before shipment. or field analysis.

FCRPS005

~~Consult Section 8.2 of the Operational Plan for methods and devices used to measure moisture content, temperature, oxygen, and pH.~~ Sample locations are provided in Figure 4-3.

4.0 SAMPLE PREPARATION

To maximize the homogeneity of the samples provided to off-site laboratories, the samples will be processed in a Wiley mill and then passed through a soil sample splitter. The following procedure will be used for homogenizing samples to be split and sent to off-site laboratories for analysis:

~~4.~~ 1 Spread each sample on a cookie sheet or similar tray. (TD 4.1)

~~5.~~ 2. Dry the samples to approximately 10 -15% moisture content (damp). Drying may be done in an oven at temperatures below 120°F, but air drying is preferred (in accordance with EPA Method 8330). If air drying, warming lamps may be used to facilitate drying, but a thermometer should be used to ensure that the temperature does not exceed 120°F. Occasional stirring will help the samples to dry more quickly.

NOTE: A hazards analysis of the Wiley mill, and the manufactures' instructions, both indicate that the samples should not be too dry. ~~This~~ The concern is due to explosive risk and Grinder performance ~~reasons~~ requirements. On the other hand, if the sample is too wet, it will smear and gum up rather than mix properly and thoroughly. Experience gained during previous testing at UMDA indicates 10-15% moisture to be optimum.

~~6.~~ 3. After drying, manually break-up clods and remove pebbles and stones greater than 1/4 inch.

~~7.~~ 4. Pour the sample into the loading funnel of the mill. Occasionally the mill may clog and the operator must gently push the material using a wooden dowel.

~~8.~~ 5. After the sample has passed through the mill, collect the material and split the sample using the riffle/splitter, if required. If splitting is not required, collect the sample and pour into the sample shipping container.

4.2 Labeling and Tagging:
(from page 5 of 8)

FCRPS005

~~6.~~ 5. A decontaminated bowl and spoon, and new sample containers shall be used for each sample location for discrete samples. Decontamination procedures are described in Field SOP 3.0.

insert

TABLE 1-1 PROCESS PARAMETER SAMPLING AND ANALYSIS SCHEDULE[1]				
Matrix	Parameter	Frequency	Req. Volume per sample	Method
1. Windrow compost	Explosives Per Table 8-2 of Pilot Scale Operational Plan	1 sample per locations 1, 2, & 3 per cross-section: Day ~~0, 7, 14, 21, 28~~ **0, 5, 10, 20, 30, 40, 60**	8 ounces	Laboratory (SW846 8330)
2. Windrow compost	TCLP Metals	1 sample per locations 1, 2, & 3 per cross-section: Day ~~0 & 28~~ **0 and 60**	8 ounces	Laboratory (SW 846 6010, 1311, & 7470)
3. Windrow compost	Total metals of barium, cadmium, chromium, & lead	1 sample per locations 1, 2, & 3 per cross-section: Day ~~0 & 28~~ **0 and 60**	8 ounces	Laboratory (SW 846 6010)
4. Windrow compost	TOC	1 sample per locations 1, 2, & 3 per cross-section: Day ~~0, 7, 14, 21, 28~~ **0, 5, 10, 20, 30, 40, 60**	8 ounces (both analyses may be performed using total 8 ounces of soil)	Laboratory (EPA 9060)
5. Windrow compost	TKN	1 sample per locations 1, 2, & 3 per cross-section: Day ~~0, 7, 14, 21, 28~~ **0, 5, 10, 20, 30, 40, 60**		Laboratory (EPA 351.3)

Notes:
1. Complete sampling and analysis procedures and details for the performance parameters are provided in the **approved** Biofacility Pilot Scale QAPP.

next 4.0 5.0

~~4.0~~ Decontamination Water and Storm Water Retention Pond Sampling

Decontamination water generated from the cleaning of sampling equipment and reusable personal protective equipment (PPE) will be collected and stored in portable temporary storage tanks or 55 gallon drums. Accumulated storm water and surface runoff will be collected in two retention ponds.

FCR/S005

5.1 ~~4.1~~ Tools and Materials

disposable Teflon or polyethylene **bottom filling** bailer
appropriate sample containers (see Section 4.0 of the approved Pilot Scale QAPP)
appropriate chain-of-custody, labels, tags, etc. (See approved Pilot Scale QAPP)
sampling scoop or jar on a long stick (type used for surface water sampling)
field logbook
indelible pen

5.2 ~~4.2~~ Sample Collection

Decontamination Water
The following procedure shall be used to collect samples of decontamination water:

1. Slowly lower the disposable Teflon or polyethylene **bottom-filling** bailer beneath the water surface until full.

2. Retrieve the bailer and fill the appropriate sample containers. Vials for volatile organics analysis (VOA) will be filled first. **Avoid creating volatilization of the sample while transferring.** Fill each VOA vile so that a meniscus is formed at the surface, and there are no air bubbles and no free headspace. Then tightly cap and invert each container. Fill the appropriate sample containers for other analyses to be performed, and described in Section 4.0 of the approved Pilot Scale QAPP.

3. Follow the sample **labeling, tagging and** identification, chain of custody, and shipping and handling procedures described in Section 4.0 of the approved Pilot Scale QAPP. Document all sampling activities in the field logbook.

FCRPSCOS

Storm/run-off Water

The same procedure described above for collecting samples from decontamination water will be used to collect samples of storm water and run-off water **in the retention ponds**. If the water level in the retention ponds is too low to sample using a **bottom-filling** bailer, then **a sampling device on a stick or rod** ~~sample containers~~ will be filled ~~directly~~ by submerging in the water. ~~In this case, care shall be taken so that any preservative in the sample containers is not lost.~~ **The sample shall be transferred to the appropriate sampling container. At no time will the sampler enter the retention ponds.**

An NSWC Crane representative may perform the Storm/run-off water sampling in lieu of the above based on the IDEM approved NPDES permit requirements.

ORIGINAL

NAVFAC Southern Division/ Morrison Knudsen Corporation	District II RAC

FIELD CLARIFICATION REQUEST (FCR)

Delivery Order No.: 4324-0009	**Subcontract No.:** 4324-	**FCR No.:** 4324-0009-FCR-PS006
Pilot Scale Operational Plan		Page 1 of 1

Reference Documents: Pilot Scale Operational Plan, Rev. 5 dated June 6, 1997, Appendix F and Pilot Scale QAPP, Rev 5, dated June 6, 1997

Problem / Change Description:

Approval is requested for the following changes:

1.) Appendix F, Supplement to QAPP
Marked pages F-6, F-7, F-9, F-11, and F-13

2). Pilot Scale QAPP
Marked pages Section 1, page 15 of 34; Section 4, pages 1, 5, 6, 8, 11, 23, 24, 27, and 32 of 34; Section 6, page 1 of 4; Section 7, page 1 of 4, Section 13, Page 1 of 3; and Appendix A, pages 2 and 3 of Table A-1.

Initiated by	Signature: Don Miller	Organization: Morrison Knudsen	Date: 07/30/97

Resolution:

If this FCR affects a subcontract, indicate CID number: N/A

Approval by MK PE	Signature: Don Miller	Date: 7/30/97	**Approval by ROICC/NTR or RPM**	Signature: [illegible]	Date 8/22/97
Approval by MK PjM	Signature: D Ball	Date: 7/30/97	Additional Reviews: By/Date Christine D. Freeman 8/25/97 NSWC Crane Env. Prot. Dept.		
Approval by MK QC	Signature: Steven Coy	Date: 7/30/97			
Approval by MK REG SPT.	Signature: Steven Coy	Date: 7/30/97			

P[illegible]lator Approval/Notification Recommended:
Y[illegible] ☐ No ☐ Approval w/ mod Carol Witt 8/19/97

A:FCRPS001.DOC

APPENDIX F
SUPPLEMENT TO QAPP

TABLE 1-2 FIELD MEASUREMENT PARAMETERS AND ASSOCIATED MEASUREMENT AND ACCURACY RANGES		
PARAMETER	**MEASUREMENT METHOD**	**MEASUREMENT AND ACCURACY RANGES**
Oxygen	oxygen probe	range = 0 - ~~22~~% in 1% increments 21
Temperature	hand-held compost temperature probe	range = 0 to 93°C in 1° increments or 0 - 200°F in 1° increments
Moisture Level	sample weighing and drying	weights reported to the tenth of a gram
pH	pH meter	range = 4.0 to 10.0; pH reported to the tenth of a pH unit

1.3 PROCESS MONITORING MEASUREMENT AND SAMPLE LOCATIONS AND FREQUENCY

Locations for process monitoring measurements and samples are described in Section 9.1 of ~~the~~ **this** Pilot Scale Operational Plan. A summary of the process monitoring schedule is presented in Table 1-3 ~~of this appendix~~ **below:**

TABLE 1-3 PROCESS MONITORING MEASUREMENT AND SAMPLING SCHEDULE				
PARAMETER	**SAMPLING/ ANALYTICAL METHOD**	**NUMBER OF SAMPLES PER SAMPLING EVENT**	**VOLUME REQUIRED PER SAMPLE**	**SAMPLING SCHEDULE**
Oxygen	Field SOP 1.0	6 per cross-section (24 total)	in situ measurement	Daily
Temperature	Field SOP 1.0	6 per cross-section (24 total)	in situ measurement	Daily
Moisture Level	Field SOP 1.0	3 per cross section (12 total)	~~in situ~~ **ex situ** measurement **volume designated in Field SOP**	Three times per week **and after moisture added to any pile**
pH	Field SOP 1.0	1 per cross section (4 total)	~~in situ~~ **ex situ** measurement **on sample left from moisture sampling**	Once per week

SECTION 2.0
QUALITY ASSURANCE OBJECTIVES FOR PROCESS MONITORING DATA

2.1 FIELD PRECISION OBJECTIVES

Field duplicate data will be evaluated to determine potential variability introduced by sampling or measurement techniques. This evaluation will be performed during data verification and summarized in the data assessment. One duplicate sample or measurement will be collected for every ~~20~~ 24 or fewer samples or measurements to qualitatively evaluate precision.

If duplicates are over 1% different, then 2 duplicates shall be taken per event.

2.2 FIELD ACCURACY OBJECTIVES

Accuracy for field measurements will be ensured by adhering to established Field SOPs found in Appendix D.

2.3 FIELD COMPLETENESS OBJECTIVES

Field completeness for process monitoring data will be 85%. This goal reflects the ability to collect additional samples or measurements, if necessary, to complete the data set.

2.4 REPRESENTATIVENESS OF FIELD DATA

Representativeness is addressed by establishing a well-designed sampling program. The rationale for the sampling program is described in Section 8.0 of ~~the~~ **this** Pilot Scale Operational Plan. Sampling locations and frequencies have been selected so that the material sampled will be representative of the appropriate windrow or windrow section.

2.5 COMPARABILITY OF FIELD DATA

The comparability goal will be achieved by using established Field SOPs and by reporting data in appropriate units. Field measurement procedures are designed to ensure comparability of data within a single windrow, and among different windrows.

3.2.1 Field Duplicate Measurements

Field duplicate data will be evaluated to determine potential variability introduced by sampling or measurement techniques. One duplicate sample or measurement will be collected for every 20 or fewer samples or measurements to qualitatively evaluate precision. The precision of field duplicate measurements will be determined by calculating the relative percent difference (RPD) between the original and the duplicate measurement. The calculation for RPD is provided in Section 12.0 of the **approved** Pilot Scale QAPP.

3.3 DECONTAMINATION PROCEDURES

Windrow

Procedures for decontamination of large equipment, sampling equipment, and personnel are described in Field SOP 3.0 in Appendix D. Large equipment will be decontaminated in a designated decontamination facility. All non-disposable sampling equipment will be decontaminated after each ~~sample or measurement~~. Personnel will remove and dispose of or clean PPE within the designated personnel decontamination area. The extent of known contamination will determine the degree of decontamination required. If the extent of contamination cannot be readily determined, cleaning will be performed according to the assumption that the equipment is highly contaminated. The windrow machine will be inspected between windrows and all loose dirt will be swept or brushed off the exterior.

3 see other SOP.

Decontamination water from the large equipment decontamination facility will be stored in a dedicated tank. Decontamination water and water collected in sumps will either be ~~recycled as compost process water or~~ transported to a wastewater treatment facility at Rockeye or Mine Fill A **or disposed according to Navy EPD procedures,** as described in Section 4.7 of the approved Pilot Scale QAPP.

deionized

Equipment rinsate blanks will be collected to ensure that sampling equipment is clean and that the potential for cross-contamination has been minimized or prevented. Rinsate blanks will be collected from the final ~~reagent grade~~ water rinse used in sample equipment decontamination as described in Section 4.6 of the approved Pilot Scale QAPP.

Decontamination of sampling probes is addressed in Appendix D of this Operational Plan.

Decontamination of sampling equipment is addressed in Appendix D of this Operational Plan.

SECTION 4.0
CUSTODY PROCEDURES

4.1 FIELD CUSTODY PROCEDURES

4.1.1 Field Documentation

All field data will be recorded in bound field logbooks or on the Daily Process data forms described in the SOPs. Entries will be described in as much detail as possible. ~~Field logbooks will be assigned to project personnel an will be stored in the project document control center when not in use~~. Each logbook will be identified with a specific document number. Field logbook title page information and data recording procedures will be as described in Section 5.1 of the approved Pilot Scale QAPP.

4.1.2 ~~Measurement and~~ Sample Identification

Field ~~measurements~~ Samples will be identified using the ~~following~~ format: described in Section 5.1 of the approved Pilot Scale QAPP.

~~mixXXXXXX~~

- ~~mix - precedes the windrow number and indicates a mix for the pilot scale study~~
- ~~the first 'X' indicates the mix or windrow number (1-8) **(1-7, etc.)**~~
- ~~the second and third 'X's indicate the day sampled (00, 07, 14, 21, 28, etc.) **(00, 05, 10, 20, 30, 40, 60)**~~
- ~~the fourth 'X' indicates whether the sample was collected before (b) or after (a) turning~~
- ~~the fifth 'X' indicates the cross-section letter (A, B, C, or D)~~
- ~~the sixth 'X' indicates the sample location within the cross-section (1 through 6)~~

~~Therefore, an example temperature measurement identification number is:~~

~~mix303aB5,~~ **mix305aB5** 7.

~~which indicates a measurement collected from mix (windrow) number three, on the third~~ **fifth** ~~day, after turning, from cross-section 'B' at sample location 5.~~

~~Field duplicate measurements will be labeled using the same protocol as regular measurements, but will have the letters 'FD' added to the end. Since field duplicate measurements are not sent to a laboratory, there is no need to hide its identification as a duplicate.~~

SECTION 6.0
PROCESS MONITORING DATA REDUCTION, VALIDATION AND REPORTING

6.1 DATA REDUCTION

Data from direct read instrumentation will be recorded in field logbooks immediately after measurements are taken. If errors are made, results will be legibly crossed out, initialed and dated by the field sampler, and corrected in a space adjacent to the original (erroneous) entry.

The precision of field duplicate measurements will be determined by calculating the relative percent difference (RPD) between the original and the duplicate measurement. The calculation for RPD is provided in Section 12.0 of the approved Pilot Scale QAPP.

6.2 DATA ASSESSMENT AND CORRECTIVE ACTION

RPD will be calculated on a weekly basis. There are no standard acceptance criteria for field measurement data. The criteria in Table 6-1 will be used to determine the need for closer examination of data collection and instrument calibration procedures, however, accedence of these suggested values will not be cause for rejection of the data.

the duplicate readings shall be watched

Note that O_2 criteria varies significantly due to wide variety of material consistency and instrument readout in 1% increments.

TABLE 6-1
DATA ACCEPTANCE CRITERIA AND SUGGESTED CORRECTIVE ACTION

MEASUREMENT	ACCEPTABLE RPD	CORRECTIVE ACTION
~~Oxygen Level~~	~~20%~~	~~• check instrument calibration~~ ~~• verify adherence to Field SOP~~
Temperature	10%	• check instrument calibration • verify adherence to Field SOP
Moisture Level	20%	• verify adherence to Field SOP
pH	15%	• check instrument calibration • verify adherence to Field SOP

6.3 DATA VALIDATION

Validation of field measurement data will consist of checking for transcription errors and reviewing field log books.

(barium, cadmium, total chromium, lead), and TCLP-metals, depending on initial excavation site characterization results. Confirmation sampling will not be completed unless concentrations of TNT and RDX are at or below process goals.

Confirmation sample results will be compared to those levels in Table 1-4 to determine if TNT and RDX are below process goals and other parameters are below initial remedial goals (industrial PRGs). HMX degradation will also be closely evaluated. This data will be used to determine if treatment must continue using the same mixture, the mixture must be changed, treatment is complete or treatment has failed using all mixtures.

If treated soil does not meet process goals (i.e. TNT, RDX, **HMX**), it will be retreated using a different process mixture (recipe). Following reprocessing, if again the treated soil does not meet process goals, does not indicate a 40 percent or greater reduction in target compounds, and is unsuitable for placement in the landfill, it may require off-site disposal. This issue will be discussed during Full Scale Operations.

Data Collection Task 5 - Post-Excavation Sampling

Once soil boring sampling is completed and the results reviewed (Task 1), ~~a minimum~~ approximately ~~of~~ 200 cubic yards will be excavated for the Pilot Scale test. Additional soil excavation at Mine Fill A will be deferred to the Full Scale Operations phase.

Once soil has been removed, the Pilot Scale excavation at Mine Fill A will be sampled and temporarily backfilled from an approved source at Crane. The on-site borrow source has previously been sampled and approved based on analytical results which will be supplied prior to temporary backfilling operations.

A sampling grid will be laid out in the base of the Pilot Scale excavation(s), with a nodal spacing of 20 feet. Samples will be collected six inches below ground surface from each 20-foot by 20-foot grid block (base) and analyzed for explosives, site-specific VOCs (methylene chloride, acetone, methyl ethyl ketone, methyl isobutyl ketone, toluene and xylene) and metals (barium, cadmium, chromium and lead). Sidewalls will

be sampled every 20 feet and will not be gridded. The purpose of this sampling is to determine the level of contamination remaining in the excavation, with respect to explosives and potential site-specific contaminants. The data will be used during the Full Scale Operations to guide further excavation.

1.4.2 Project Target Constituents and Laboratory Data Use

1.4.2.1 Target Constituents

Three primary target constituents have been identified for the Pilot Scale operations: TNT, RDX and HMX. These parameters are present in many of the waste streams generated at Mine Fill A and have been detected in soil and surface water. Additional target constituents include site-specific metals and VOCs as these have also been identified in waste stored or generated at Mine Fill A.

1.4.2.2 Initial Remedial Goals

Soil will be excavated and treated to concentration levels which are protective of human health and ecology, as treated soil will be placed in an on-site landfill or used as backfill in the original excavation (Full Scale Operations task). Soil which is not successfully treated will **be managed in accordance with this QAPP.** Bench scale testing may be performed as an alternative to off-site disposal, to determine if other mixtures (recipes) can be used to improve treatment.

Pilot Scale testing success will be governed primarily by process goals for TNT and RDX (30 mg/kg, respectively) and remedial goal for HMX (34,000 mg/kg). Decreases in concentrations of other explosives will also be carefully evaluated. Process goals for TNT and RDX are further discussed below.

Preliminary Remedial Goals (PRGs) developed by Region 9 (USEPA 1996b) will be used as initial remedial goals for the remaining target constituents during the Pilot Scale phase. Industrial levels for the target constituents are listed in Table 1-4. Concentrations were derived by Region 9 using EPA toxicity values from the integrated risk information system (IRIS), updated through July 1996, HEAST, updated through May 1995, and EPA's National Center for Environmental Assessment.

SECTION 4
SAMPLING PROCEDURES

Sampling procedures will be used to collect data to meet the objectives of five data collection tasks:

- Initial Excavation Site Characterization (Section 4.1)
- Equipment Wash Water/Decontamination Water Sampling (Section 4.2)
- Storm Water Retention Pond Sampling (Section 4.3)
- Process Sampling (Section 4.4)
- Excavation Sampling (Section 4.5)

These tasks and associated objectives are described in Section 1.4.

QA/QC samples are described in Section 4.6. Decontamination procedures are provided in Section 4.7. Sample packaging and shipping information is provided in Section 4.8. A field equipment list and field test kit data sheets are provided in Appendix A.

Each of the sampling tasks listed above will be completed during the Pilot Scale, as applicable. Mine Fill A soils will be excavated and treated. It is anticipated that ~~only~~ as much as 200 cubic yards will be excavated from the site for treatment. Additional excavation at Mine Fill A will be completed during Full Scale Operations.

Confirmation sampling in the excavation(s) for the purpose of closure will not be completed during the Pilot Scale phase. The 2~~00 cubic yard~~ excavation will be sampled for explosives, site-specific VOCs and metals (barium, cadmium, total chromium, and lead) prior to being temporarily backfilled. This data will assist in delineating further excavation at Mine Fill A.

4.1 INITIAL EXCAVATION SITE CHARACTERIZATION PROCEDURES

As defined in Section 1.4, this task has three specific objectives:

Objective 1: Identify areas for Pilot Scale excavation. Analyze the soil, primarily in the vicinity of Building 153 or Building 158 (backup in case Building 153 cannot be used during the Pilot Scale) for explosives. Additional excavation at Mine Fill A will be completed during Full Scale Operations. This data will also be used as "entry " or "startup" concentrations for composting.

Objective 2: Determine if site-specific waste products are present. Site specific VOCs include methylene chloride, acetone, methyl ethyl ketone, methyl isobutyl ketone, toluene and xylene. These constituents will serve as indicators of the presence of paint wastes. Depending on VOC results, additional testing for naphtha, methanol, isopropanol and ethanol may be required. Site specific metals include barium, cadmium, chromium and lead.

Objective 3: Determine if soil is hazardous with respect to metals and TCLP list VOCs. Soil will not be accepted into the Biofacility for treatment if it is hazardous with respect to these constituents.

These three objectives will be met by collecting soil samples in a general area where high levels of explosives have been previously detected (Figure 1-5). Associated soil sample data, collected in 1985, are summarized in Table 1-1. Soil samples will be collected and analyzed for explosives; site-specific VOCs and metals; TCLP-metals; and TCLP list VOCs. This data will assist in identifying areas for Pilot Scale excavation. This data will not be used to define the extent of contamination.

Note that in this section and in Table 4-1, "VOCs analysis" indicates the soil will be tested for site-specific VOCs and TCLP list VOCs. Only one sample will be collected for analysis of both sets of VOCs.

Marking Grid Blocks for Excavation

Explosives data will be used to mark grid blocks or sampling areas as requiring excavation. If a grid block or sampling area shows contamination (> 30 mg/kg TNT or RDX) to a depth of two feet, the grid block or area will be marked for two feet of excavation. If a grid block or area shows contamination at the six-inch depth only, the block or area will be marked for one foot of excavation. If a grid block shows no contamination at six inches nor at the two-foot depth, additional grid blocks will be sampled. Sampling will continue until enough soil is "marked" for excavation (200 cubic yards ~~minimum~~ as much as for Pilot Scale).

4.2 EQUIPMENT WASH WATER/DECONTAMINATION WATER SAMPLING

Decontamination water generated at the staging area at Mine Fill A and at the Biofacility will be collected and stored in a tank. This water will be used in the process only in the startup phase. Once the treatment process is underway, only potable water will be added to enhance moisture content in the compost piles. Any solids which collect in the sumps at the Biofacility will also be added to the compost during the initial phase only.

Decontamination water stored in a tank will be sampled for explosives if used in the treatment process, or will be sampled for explosives, **RCRA metals** and POTW requirements if shipped to an on-site treatment facility. Sampling procedures are provided in Table 4-2.

The samples will be labeled and stored in a cooler with ice and kept at approximately 4 degrees Celsius. Sample documentation, packaging, and shipping procedures will be followed as described in Section 4.8 and Section 5.0, Custody Procedures.

Disposable bailers or disposable pump tubing will be used to sample tanks, eliminating the need for decontamination. Used disposable bailers will be disposed with used PPE.

4.3 STORM WATER RETENTION POND SAMPLING

Surface runoff or storm water present on the Biofacility asphalt-paved areas will be diverted to two ponds, #1 and #2. The water in the retention ponds will be sampled to determine if NPDES discharge requirements are met. Sampling procedures are provided in Table 4-3. Samples will be tested for NPDES parameters listed in Table 4-8.

The samples will be labeled and stored in a cooler with ice and kept at approximately 4 degrees Celsius. Sample documentation, packaging, and shipping procedures will be followed as described in Section 4.8 and Section 5.0, Custody Procedures. Disposable bailers or disposable pump tubing will be used to sample the retention pond water, eliminating the need for decontamination. Any used disposable bailers will be disposed with used PPE.

4.4 PROCESS SAMPLING

for a total of four samples per pile.

Amendment blends will be sampled prior to addition of soil excavated from Mine Fill A, and analyzed for TOC and TKN to determine initial levels of organic carbon and nitrogen. Amendment blend samples will be collected from sample locations 1, 2, & 3 at each cross-section. The samples at each cross section will be composited During the Pilot Scale, approximately eight compost piles, consisting of a mixture of soil and amendments, will be tested. This process is anticipated to take a minimum of 28 ~~days~~ **30 days for clean soil and 60 days for contaminated soil after that**, as dictated in the Pilot Scale Operational Plan. Each pile will be 25-30 feet long, 7 feet high and 20 feet wide. Sampling locations are displayed in Figure 4-3. Cross-section A, B, C and D will be sampled throughout the process for various parameters to be analyzed by an off-site laboratory. The schedule for sampling is as follows:

A NSWC Crane representative may perform the storm/runoff water sampling in lieu of the above, based on the approved IDEM NPDES Permit requirements.

Windrow/Compost Sampling Schedule (off-site analyses) - Pilot Scale				
Parameter	**Analytical Method**	**Number of Samples per Sampling Event**	**Volume Required per sample**	**Schedule**
Explosives (full list)	8330	3 per cross-section (12 total)	8 ounces	Day ~~0, 7, 14, 21 and 28~~ **0, 5, 10, 20, 30, 40, and 60**
TCLP-metals	1311, 6010, 7470	3 per cross-section (12 total)	8 ounces	Day 0 and ~~28~~ **60**
Metals (barium, cadmium, total chromium, lead)	6010	3 per cross-section (12 total)	8 ounces	Day 0 and ~~28~~ **60**
TOC	9060	3 per cross-section (12 total)	8 ounces (both analyses may be done using 8 ounces of soil)	Day ~~0, 7, 14, 21 and 28~~ **0, 5, 10, 20, 30, 40, and 60**
TKN	EPA 351.3	3 per cross-section (12 total)		Day ~~0, 7, 14, 21 and 28~~ **0, 5, 10, 20, 30, 40, and 60**

Once process samples have shown that explosive concentrations have been consistently reduced over time for one or more compost piles or mixtures, a confirmation sample will be collected. Confirmation samples are anticipated to be collected on Day ~~28~~ **60** of processing. However, should processing be extended, confirmation samples will be completed at the end of the time extension. Confirmation samples will be collected using procedures in Table 4-4.

Treated compost which does not meet the process goals for TNT and RDX using all mixtures may also require off-site disposal, especially if it cannot be placed in the on-site landfill. Soil and/or treated compost which requires off-site disposal will be stockpiled and sampled at a frequency to be determined by the Project Manager and the Navy. This task will be implemented during Full Scale Operations.

Air monitoring will be performed as described in Section 15.0 of the Pilot Scale Operational Plan.

4.4.1 Other Process Parameters

Field testing equipment will consist of ~~pH~~, oxygen and temperature direct reading probes. Oxygen and temperature will be measured by pushing the individual probes into the center of each sampling sector of the compost piles and allowing enough time for an accurate reading, per manufacturer recommendation. Compost pH will be determined by measuring the pH level in a solution of deionized water and a compost sample as described in Section ~~7~~ 8.2 of the Pilot Scale Operational Plan. Soil moisture will be measured by weighing the sample, drying it, reweighing it and calculating the percent moisture. Frequency of pH, oxygen, temperature and soil moisture measurements are described in Section ~~8~~ 8.0 of the Pilot Scale Operational Plan.

X cells

X this is 8.0

4.4.2 Air Monitoring

~~Industrial Scientific model TMX 417.~~

~~The concentration of methane gas, a decomposition by product, will be measured in the air above the compost piles using a Dynamation Gas Detection Instrument, Model Combo 435. All measurements will be recorded in the field log book. Further information on methane monitoring may be found in Section 11 of the Operational Plan and the SSHP.~~ 15.0

X WD

4.5 EXCAVATION SAMPLING PROCEDURE

Approximately 200 cubic yards will be required for Pilot Scale operations. Once the excavation is completed, the hole will be temporarily backfilled using soil from an approved source at Crane. Prior to backfilling, the excavation will be sampled to determine levels of explosives, site-specific VOCs and site-specific metals, if any, present above initial remedial goals. This data will be collected to guide further excavation at Mine Fill A during Full Scale Operations.

The base and walls of the excavation will be gridded using 20-foot spacings. Samples will be collected from approximately six inches below ground surface, using procedures in Table 4-1. Samples will be analyzed for explosives, site-specific VOCs and site-specific metals only.

4.6 QA/QC SAMPLES

QC samples will be collected to ensure that representative and reproducible data are obtained. The types of QC samples that will be used are discussed below. QC samples apply only to samples submitted for off-site analysis by a laboratory.

MS/MSD samples will be collected to provide sufficient volume per QC and analytical laboratory requirements. The laboratory will select aliquots that are as homogeneous as possible with respect to one another to avoid precision problems related to sample homogeneity.

4.7 DECONTAMINATION PROCEDURES

4.7.1 Sample Bottles

Sample bottles will be provided by the analytical laboratory. These bottles will arrive at the site in sealed boxes or coolers. Certification of cleanliness will accompany each box of bottles. The exception to this would be if any bottles were pre-preserved by the lab.

If certification is not included or cleanliness of the containers is suspect, USEPA approved cleaning procedures will be carefully conducted by the analytical laboratory. The procedures are as follows:

Metals: Detergent wash, tap water rinse, 1:1 HNO_3 rinse, tap water rinse, 1:1 HCL rinse, final reagent grade water rinse.

Volatiles (40 ml glass vials and septa): Non-phosphate detergent wash, tap water rinse, reagent grade water wash, dry (glassware only) in a muffle furnace at 105 degrees Celsius for one hour.

Explosives: Non-phosphate detergent wash, tap water rinse, deionized water rinse, methanol rinse, final reagent grade water rinse.

4.7.2 Sample Equipment Decontamination

Decontamination of construction and field equipment will take place in a designated area using procedures described in Section ~~6~~ 7.2 of the Pilot Scale Operational Plan. All non-disposable sampling equipment, including stainless steel trowels and spoons, will be decontaminated according to the following procedure and sequence, depending on the contaminants involved:

1) Manual scrub with Alconox and tap water wash.
2) Rinse with potable water.
3) 10% nitric acid rinse (for metals only).

4) Rinse with reagent grade water.
~~5) Reagent grade water rinse.~~
~~6)~~ **5)** Air dry.

Once dry, sampling equipment will be stored in plastic bags to prevent contamination.

Decontamination water from equipment and vehicle decontamination activities will be stored in a dedicated tank. Decontamination water and water collected in sumps will either be recycled as compost process water or transported to a wastewater treatment facility (WWTF) at Rockeye or Mine Fill A. Water shipped to the WWTF will be sampled and analyzed per waste water treatment facility permit requirements.

4.8 SAMPLE PACKAGING AND SHIPPING

Immediately after collection, samples will be properly labeled, tagged and properly preserved. Table 4-7 lists the proper container, volume requirements, and preservation needed for the sampling effort. Samples requiring refrigeration for preservation will be immediately placed in coolers packed with ice or ice packs. Proper chain-of-custody documentation will be maintained as discussed in Section 5.0 - Custody Procedures.

Packaging and shipping procedures will vary depending upon sample media, potential contaminant concentration, preservation technique, and sample container. General procedures are provided in Table 4-5. A waterproof metal or equivalent strength ice chest or cooler is suitable for packaging and shipping samples not considered "Dangerous Goods" by the U.S. Department of Transportation (USDOT). The person packaging the samples is responsible for ensuring that the cooler is in suitable condition for shipping. In the event a concern arises regarding whether a sample shipment is a USDOT "Dangerous Good" or is potentially in violation of international transportation regulations, the Project Engineer or Project Manager will be consulted.

Sample packaging should ensure that the chance of breakage is minimized and that, in the event a sample container breaks or leaks, it will not impact the integrity of other samples in the shipment. Also, samples should be protected from ice melt. Each sample container should be placed in a Ziploc™-type bag, and wrapped in packing material such as bubble wrap or comparable shock-absorbing materials when shipping glass containers to avoid breakage. Adequate ice, contained in double Ziploc™-type bags, must be included with each cooler shipment so that the contents are maintained at 4 (± 2) degrees Celsius until receipt at the laboratory. If necessary, a temperature blank will be shipped with each cooler.

TABLE 4-4. COMPOST SAMPLING PROCEDURE

Objective: To support the operations at the Biofacility and monitor the effectiveness of soil remediation using composting.

Equipment:
-pH monitors
-temperature and oxygen probes
-portable oven (moisture content) and scale
~~-hand auger, sample bucket~~ **stainless steel push tube with sleeves or split spoons** and attachments, ~~or~~ drive sampler, or hand auger
-PID
-stainless steel spoons, bowl and trowels
-riffle splitter
-No. 4 Wiley Mill, or equivalent

Method:

Consult Section 7.2 of the Operational Plan for methods and devices used to measure moisture content, temperature, oxygen and pH. Use the following steps to collect samples of compost for off-site analysis. Sample locations are provided in Figure 4-3. See Field SOP 2.0 in Appendix D of the approved Pilot Scale Operational Plan

~~1. Place temporary flags at each cross section to be sampled.~~
~~2. Take the sample marked "1" in Figure 4-3 first. Using the decontaminated hand auger **push tube** and attachments, bore **push** down approximately three feet and collect a sample. Retrieve enough volume to fill all required sample containers (see Section 4.4).~~
~~3. Place the contents of the bucket **tube** in a stainless steel bowl. Allow compost to air dry.~~
~~4. Macerate (soften) air-dried compost in No. 4 Wiley mill. Split the sample using a riffle splitter to fill containers.~~
~~5. Collect the samples marked "2" and "3" using a hand auger **push tube**. Make sure the auger **tube**, bucket and attachments are decontaminated prior to sampling the pile and in between sampling locations.~~
~~6. Take care not to sample material which has caved into the boring. If necessary, use a long length of PVC pipe to keep the hole open once the initial boring has been made.~~
~~7. Record all observations, including test results and off-site sample information (sample I.D., date, time, analysis), in the field log book. All field equipment will be calibrated daily per manufacturer guidelines. Record calibration data in the field logbook.~~
~~8. Samples for off-site analysis will be collected at the frequency summarized in Section 4.4.~~

Documentation and Shipping
Documentation procedures are provided in Section 5.0. Packaging and shipping instructions are provided in Table 4-5.

TABLE 4-4. COMPOST SAMPLING PROCEDURE
QA/QC: One field duplicate will be collected per compost pile, per sampling event, and analyzed for the same parameters as the regular samples (explosives, metals (barium, cadmium, total chromium, lead), TCLP-metals, TKN, TOC). Field equipment will be decontaminated using procedures in Section 4.7. One equipment rinsate will be collected per 20 samples collected and analyzed for the same parameters as the regular samples (explosives, metals (barium, cadmium, total chromium, lead), TKN, TOC). One field blank (type B) will be collected at the composting area (1 per ~~20~~ 24 samples) to determine if any contaminants were introduced during sampling. An additional field blank (type A) will be collected of the water used in decontamination. Both blanks will be tested for the same parameters as the regular samples (explosives, metals (barium, cadmium, total chromium, lead), TKN, TOC). A third field blank will be collected from the water used in the process, unless the source is the same as the potable water source for decontamination.

x CWS

TABLE 4-6. SUMMARY OF SAMPLING AND ANALYSIS PROGRAM

Task	Matrix	Parameters	Estimated No. of Samples(a)		QA/QC Samples				
			RS	FD	FBA	FBB	RB	TB	MS/ MSD
1. Initial Excavation Site Characterization	Soil	total VOCs (site-specific and those on the TCLP list), metals (Ba, Cr, Cd, Pb), TCLP-metals, Explosives	14+	2+	1	1+	1+	4+	1+
2. Equipment Wash Water/ Decon Water	Water	Explosives, RCRA metals, POTW parameters (as required by NSWC Crane)	3+	1	1	1	0	0	1
3. Storm Water Retention Pond Sampling	Water	NPDES parameters (listed in Table 4-8)	3+	1	1	1	0	0	1
4. Compost (Process) Sampling (includes confirmation sampling)	Compost + soil	Explosives, TOC, TKN (~~5~~ 7 events: day ~~0, 7, 14, 21, 28~~) 0, 5, 10, 20, 30, 40 and 60)	12 per pile per event	1 per pile per event	1 per event (b)	2 per event	2 per event	0	5 per event
		metals (Ba, Cd, Cr, Pb), TCLP-metals (2 events: day 0, ~~28~~ 60 only)	12 per pile per event	1 per pile per event	1 per event (b)	2 per event	2 per event	0	5 per event
blends	Amend-ment(c)	TOC, TKN	4 ~~8~~ composits per pile	~~1~~ 0	0	0	~~1~~ 0	0	~~1~~ 0
5. Excavation Soil Sampling	Soil	Explosives, site-specific VOCs, metals (Ba, Cd, Cr, Pb)	10+	1+	1	1+	1+	4+	1+

ok

X

TABLE 4-6. SUMMARY OF SAMPLING AND ANALYSIS PROGRAM

Task	Matrix	Parameters	Estimated No. of Samples(a)		QA/QC Samples				
			RS	FD	FBA	FBB	RB	TB	MS/ MSD

Notes:

FBA = field blank type A (sample of waters used for decontamination, including distilled/deionized water and potable water); type A field blanks will be collected at a frequency of 1 per event per source of tap water for decontamination; analytical frequency will be finalized by the Project Chemist

FBB = field blank type B (water sample prepared during sampling event to determine if contamination introduced at sampling site); type B field blanks will be collected at a frequency of 1 per 20 regular samples; analytical frequency will be finalized by the Project Chemist

RB = rinsate blank or equipment rinsate blank

TB = trip blank (will be prepared by laboratory and tested for VOCs only)

MS/MSD = matrix spike and matrix spike duplicate (collected at a frequency of 1 per 20 samples collected)

RS = regular sample

FD = field duplicate

a. Sample totals are estimated. The numbers may increase or decrease based on field conditions.
b. An additional field blank (A) will be collected of the water used in composting (one time sampling only), unless it is the same water used in decontamination and steam cleaning.

TABLE 4-7. ANALYTICAL METHOD REQUIREMENTS

Analyte	Analytical Method[1]	Sample Container[2]	Preservation	Holding Time
Explosives	8330 (full list)	2 1-L amber glass jars	Ice to 4°C	7 days; analyze within 40 days after extraction
RCRA metals	6010	1 500-mL plastic	HNO3 to pH < 2; Ice to 4°C	180 days
TOC	EPA 415.1	1 500-mL plastic	H2SO4 to pH < 2, Ice to 4°C	28 days
TKN	EPA 351.3			28 days

Notes:

Note holding times in **bold-face** type.

1. SW-846 methods (latest revision) will be used unless otherwise noted.
2. Container size may vary from lab to lab. Aliquots from several analyses may be obtained from one container, as directed by the laboratory.

TABLE 4-8. NPDES DISCHARGE LIMITATIONS[1]

Parameter	Monthly Limit - Average (mg/L)	Monthly Limit - Maximum (mg/L)
Total Suspended Solids (TSS)	10	15
Chemical Oxygen Demand (COD)	10	15
Biochemical Oxygen Demand (BOD)	10	15
Oil and Grease	26	52
Nitrate	N/A	90
Ammonia-N	3	6
pH (field measured)[2]	between 5.0 and 11.0 units	

Notes:

1. These values were obtained from the NPDES permit no. IN 0021539 (highest levels permitted).
2. Field pH will be measured using an ~~Orion Model~~ pH meter ~~(290)~~. Calibration data and model information will be recorded in the field logbook, including results.

N/A = not available

Horiba Twin B-213 or a Hach model EC10

COD

SECTION 6
CALIBRATION PROCEDURES AND FREQUENCY

This section describes the calibration procedures and the frequency at which these procedures will be performed for both field and laboratory instruments.

6.1 FIELD INSTRUMENT CALIBRATION

Field instruments will be calibrated as prescribed by the owner's manual. Instruments, including the PID, pH meter and temperature/oxygen probe will be calibrated daily, ~~in the morning~~, prior to use. Calibration data will be documented in the field logbook. ~~A post-calibration may be completed at the end of the day as a check on instrument function.~~ Calibration procedures for field test display instruments and the PID are provided as Appendix E, and are summarized below.

<u>pH Meter Calibration</u> (Horiba Twin B-213, the following procedure will be adjusted as needed to meet the requirements of this device)

The pH meter will be calibrated with standard buffer solutions before being taken to the field. In the field, the meter will be calibrated daily with two buffer solutions before use. The range of the buffer solutions will be at least three or more pH units apart and will bracket the expected pH of the sample being measured.

- Ensure the temperature of the buffer and the sample are the same.
- Connect pH electrode into pH meter and turn on the pH meter.
- Set temperature setting based on the temperature of the buffer; place electrode in first buffer solution.
- After reading has stabilized, adjust "CALIB" (or equivalent) knob to display correct value.
- Repeat procedure for second buffer solution.
- Place pH electrode in the sample and record the pH as displayed.
- Remove pH electrode from sample and rinse off with distilled water.
- Recalibrate the pH meter every time it is turned off and turned back on, or if it starts giving erratic results.

PID (MicroTIP MP-1000) (from user's manual)

MicroTIP must be calibrated daily in order to display concentrations in units equivalent to ppm. First a supply of zero air, which contains no ionizable gases or vapors, is used to set MicroTIP's zero point. Then, span gas, containing a known concentration of a photoionizable gas or vapor, is used to set the sensitivity. Usually clean ambient air will be suitable as zero air. Isobutylene at 100 ppm in air is recommended as span gas.

- Connect the supplied regulator to the span gas cylinder. Hand tighten the fittings. Observe proper handling techniques for all gases.
- Open the gas valve on the gas bag by turning the valve stem fully counterclockwise.
- Attach the nut to the regulator. Hand tighten the fittings.
- Turn the regulator knob counterclockwise about half a turn to start the flow of gas.
- Fill the gas bag about half full and then close the regulator fully clockwise to turn off the flow of gas.
- Disconnect the bag from the adapter and empty it. Flush the bag a few times with the span gas and then fill it.
- Close the gas bag by turning the valve clockwise.
- Press SETUP and select the desired Cal memory with the arrow keys and press ENTER. Press EXIT to return to the normal display.
- Press CAL and enter the desired response factor. Use a table of response factors available in the User's Manual to find the factor for the compound of interest. If the compound is not in the table or you are not looking for one specific compound, enter 1.00. The concentration detected by MicroTIP will be multiplied by the response factor before it is displayed and logged.
- Expose MicroTIP to zero air. Press ENTER and MicroTIP sets its zero point.
- MicroTIP then asks for the span gas concentration. Enter the known span gas concentration and then connect the span gas bag adapter to the inlet.
- Press ENTER and MicroTIP sets its sensitivity.
- When MicroTIP's display reverts to normal, MicroTIP is calibrated and ready for use. Remove the span gas bag from the inlet.

Temperature/Oxygen Probes (Reotemp)

If the monitor/probe has not been used for 15 minutes, it will automatically shut down.

SECTION 7
ANALYTICAL PROCEDURES

This section describes the analytical procedures for all samples collected for analysis.

7.1 FIELD ANALYTICAL PROCEDURES

Operation and QC procedures for the PID, pH meter and temperature/oxygen probes are provided in Appendix E. and SOP 1.0 in Appendix D of the Operational Plan.

7.2 LABORATORY ANALYTICAL PROCEDURES

The laboratory will implement project required Standard Operating Procedures (SOPs). These laboratory SOPs for sample preparation, cleanup and analysis are based on the latest SW-846 Revision (U.S. EPA, January 1995) and EPA methods for methods of chemical analysis of water and waste (USEPA, 1983) . These SOPs which provide sufficient details and are specific to this RCRA Corrective Action Interim Measure are provided in Appendix F and summarized in Table 7-1.

The site samples for volatile organic compounds analysis (VOA) may be screened in the laboratory, as described in the VOA SOP and shall be analyzed, either as low or medium level concentration samples, or as a series of dilutions in order to cover the expected concentration range of the site-specific compounds of interest.

The documentation of appropriate method validation for the project target compounds will be submitted in the Pilot Scale Completion Report. It includes the criteria for acceptance, rejection or qualification of data.

7.2.1 List of Project Target Compounds and Laboratory Reporting Limits

A listing of project target compounds, soils cleanup levels, and analytical methods to be used for samples collected during the project are summarized in Tables 1-3, 1-4, and 1-5. Reporting limits are provided in Table 1-4. Other analytical results will be reported using standard method PQLs as reporting limits. Standard method detection limits for each method in Table 1-5 are provided in Appendix B.

7.2.2 List of Associated QC Samples

The analytical methods and laboratory SOPs include a QC section which address the minimum QC requirements for the analysis of specific analyte groups. Compounds to be spiked will be representative of the target compounds of interest. Section 7.1 of the Sampling and Chemical Analysis Quality Assurance Requirements for the Navy Installation Restoration Program (NEESA, 1988) contains a complete listing of the associated QC samples required for this project. This document is provided as Appendix H.

SECTION 13
CORRECTIVE ACTION

13.1 CHANGE CONTROL

Prior to implementation, changes to original documents, procedures, and specifications will require approval by the ~~parties originally responsible for approval of this document~~ U.S. NAVY and U.S. EPA Representatives. It is the responsibility of project personnel to appropriately record the change and to make the documentation available to the PM and SQCS. The effect of the change on the project will then be evaluated by the PM and SQCS. A description of the proposed change, along with the results of the evaluation, will be presented to the Navy for approval. Following Navy approval, the change will be documented as a revision to the original document to reflect the work as actually performed.

13.2 FIELD CORRECTIVE ACTION

Nonconforming items and activities are those which do not meet the project requirements, procurement document criteria, or approved work procedures. Nonconformances may be detected and identified by:

- Project Staff - During the performance of field investigation and testing, supervision of subcontractors, and preparation and verification of analyses and design,

- Laboratory Staff - During the preparation for and performance of laboratory testing, calibration of equipment, and quality control activities, and

- Quality Assurance Personnel - During the performance of audits or daily review of field reports or data.

Each nonconformance affecting quality will be documented by the personnel identifying the nonconformance. For this purpose, a standard form (e.g., Nonconformance Report), results of laboratory analysis quality control tests, audit report, internal memorandum, or letter will be used as appropriate. Documentation will include:

- Identification of the individual(s) identifying the nonconformance,

- Cause and description of the nonconformance,

- Method(s) for correcting the nonconformance (corrective action) or description of the variance granted,
- Schedule for completing corrective action, and
- Any required approval signatures.

Documentation will be distributed to the Program Quality Control Manager (PQCM) with copies to the PM and SQCS. It is then the responsibility of the PQCM to approve and initiate resolution for the institution of the necessary corrective action to the nonconformance. Documentation describing the nonconformance and the corrective action implemented will be placed in the project file. Completion of corrective actions for significant nonconformances should be verified by quality assurance personnel as part of future auditing activities.

Any recurring nonconformance should be evaluated by project, laboratory, and/or quality assurance personnel to determine its cause and appropriate changes instituted in project requirements and procedures to prevent future recurrence. When such an evaluation is performed, the results will be documented.

13.3 LABORATORY CORRECTIVE ACTION

Corrective action in the laboratory may occur prior to, during and after initial analyses. A number of conditions such as broken sample containers, multiple phases, low/high pH readings, and potentially high concentration samples may be identified during sample log-in or just prior to analysis. Following consultation with lab analysts and section leaders, it may be necessary for the Laboratory Quality Assurance (QA) Officer to approve the implementation of corrective action. The laboratory standard operating procedures (SOPs) specify some conditions during or after analysis that may automatically trigger corrective action or optional procedures. These conditions may include dilution of samples, additional sample extract cleanup, automatic reinjection/reanalysis when certain quality control criteria are not met, etc.

The bench chemist will identify the need for corrective action. The Laboratory Project Manager, in consultation with the Laboratory supervisor and staff, will approve the required corrective action to be implemented by the laboratory staff. The Laboratory QA Officer will ensure implementation and documentation of the corrective action. If the nonconformance causes project objectives not to be achieved, it will be necessary to inform all levels of project management including the USEPA RPC to concur with the corrective action.

Table A-1. Field Equipment List (Pilot Scale)

Category/item	Req'd Qty	Collected	Category/item	Req'd Qty	Collected
Health and Safety			**Health and Safety**		
(rentals)			(consumables)		
			Fire Extinguisher		
PID			CPR Pocket Masks		
Isobutylene or other cal gas (PID)			Dual station/eyewash station		
regulator (ask rental place)/tubing			Moist towelettes		
Dust Monitor (mini-ram)			UL listed hazardous locations		
personal air monitor			Smoke Alarms		
(consumables)			(support documents)		
Kimwipes (medium/large)			copy of MK Safety manual		
Respirators (note size), if required			(SouthDiv specific)		
Chemical cartridges, if required			Copy of MK Industrial Hy-		
HEPA cartridges, if required			giene Procedures Manual		
Cleaner/sanitizer for respirators			Copy of MK Safety and		
PPE Covering Size:_____:			Health Program Desc. for		
Type:_____Size:_____:			Haz. Waste Site Operations		
PPE gloves; Size:_____Type:_____			Copy of MK Accident Prev.		
PPE foot protection Size:_____:			Plan for SouthDiv Contract		
Foam earplugs			OSHA posters/ 2 OSHA		
Safety Glasses			200 forms		
Silver cloth duct tape			Tool Box Talks (orange book)		
Personal first aid kit			EM 85-1-1 Corps Safety Man.		
Reflective safety vests			Signed off SSHP/Work Plan		
Yellow "Caution" tape			MK Accident Data Report		
PID Lamp Cleaner bottles			Form # 678/91		
Two 10-foot tygon tubing:			MK Supervisor Accident In-		
10 feet - 0.25 inch I.D.			vestigation Report Form #		
10 feet - 0.125 inch I.D.			CAS 24/77		
Two 20lb. ABC dry chemical fire			MK Daily Logbook Report		
extinguishers			from SSHP		
Bloodborne pathogen kits			MK Weekly Inspection		
hardhats			Checklist forms from SSHP		
steel-toed boots			PMO project procedures:		
orange pylons			PHSP 001.1, 002.1, 003.1,		
workhorses			004.1, 005.1		
			29 CFR 1910, 29 CFR 1926		

Notes:

1. A checkmark is placed under the column "Collected" once the item is inventoried at the site.
2. The above list should be reviewed carefully prior to work beginning to make sure all necessary items are accounted for.

CWS
app
8/19/97

Table A-1. Field Equipment List (Pilot Scale)

Category/item	Req'd Qty	Collected	Category/item	Req'd Qty	Collected
Health and Safety			**Health and Safety**		
(rentals)			(consumables)		
			Fire Extinguisher		
PID			CPR Pocket Masks		
Isobutylene or other cal gas (PID)			Dual station/eyewash station		
regulator (ask rental place)/tubing			Moist towelettes		
Dust Monitor (mini-ram)			UL listed hazardous locations		
personal air monitor			Smoke Alarms		
(consumables)			(support documents)		
Kimwipes (medium/large)			copy of MK Safety manual		
Respirators (note size), if required			(SouthDiv specific)		
Chemical cartridges, if required			Copy of MK Industrial Hy-		
HEPA cartridges, if required			giene Procedures Manual		
Cleaner/sanitizer for respirators			Copy of MK Safety and		
PPE Covering Size:_____:			Health Program Desc. for		
Type:_____Size:_____:			Haz. Waste Site Operations		
PPE gloves; Size:_____Type:_____			Copy of MK Accident Prev.		
PPE foot protection Size:_____:			Plan for SouthDiv Contract		
Foam earplugs			OSHA posters/ 2 OSHA		
Safety Glasses			200 forms		
Silver cloth duct tape			Tool Box Talks (orange book)		
Personal first aid kit			EM 85-1-1 Corps Safety Man.		
Reflective safety vests			Signed off SSHP/Work Plan		
Yellow "Caution" tape			MK Accident Data Report		
PID Lamp Cleaner bottles			Form # 678/91		
Two 10-foot tygon tubing:			MK Supervisor Accident In-		
10 feet - 0.25 inch I.D.			vestigation Report Form #		
10 feet - 0.125 inch I.D.			CAS 24/77		
Two 20lb. ABC dry chemical fire			MK Daily Logbook Report		
extinguishers			from SSHP		
Bloodborne pathogen kits			MK Weekly Inspection		
hardhats			Checklist forms from SSHP		
steel-toed boots			PMO project procedures:		
orange pylons			PHSP 001.1, 002.1, 003.1,		
workhorses			004.1, 005.1		
			29 CFR 1910, 29 CFR 1926		

DELETE

Notes:

1. A checkmark is placed under the column "Collected" once the item is inventoried at the site.
2. The above list should be reviewed carefully prior to work beginning to make sure all necessary items are accounted for.

CWB
app.
8/19/97

ORIGINAL

NAVFAC Southern Division/ Morrison Knudsen Corporation	District II RAC

FIELD CLARIFICATION REQUEST (FCR)

Delivery Order No.: 4324-0009	**Subcontract No.:** 4324- NA	**FCR No.:** 4324-0009-FCR-PS007
Pilot Scale Operational Plan, Site Safety and Health Plan		Page 1 of 1

Reference Documents: Pilot Scale Operational Plan Appendix A; Site Safety and Health Plan, Rev. 5 dated June 6, 1997

Problem / Change Description:

Approval is requested for the following changes:

1). Delete "Draft Hazard Analysis Report for Soils Bioremediation Process Equipment" dated May 16, 1997 and replace with Final report dated July 7, 1997.

2). Add letter # 4324-563 from Dave Beall of MK to Ms. Chris Freeman of NSWC EPD dated July 17, 1997; Explosives Hazard Analysis Report : Recommendations.

3). Add "Hazard Review Of Wiley Mill" dated May 1990, by T. A. Groce of Hercules Incorporated.

Initiated by	Signature:	Organization: Morrison Knudsen	Date: 07/30/97

Resolution:

If this FCR affects a subcontract, indicate CID number: N/A

Approval by MK PE	Signature:	Date: 7/30/97	**Approval by ROICC/NTR or RPM**	Signature:	Date 8/22/97
Approval by MK PjM	Signature: D Beall	Date: 7/30/97	Additional Reviews: By/Date Christine D. Freeman NSWC Crane, EPD 8/25/97		
Approval by MK QC	Signature: Steven Coy	Date: 7/30/97			
Approval by MK REG SPT.	Signature: Steven Coy	Date: 7/30/97			

Regulator Approval/Notification Recommended:

Yes ☐ No ☐ Approved Carol [illegible] 8/17/97

A:FCRPS001.DOC

FOR PSCO ?
Approved 8/17/97

MORRISON KNUDSEN CORPORATION
300 Highway 361, CTR-12
P.O. Box 310
Crane, IN 47522
(812) 854-6941
Fax: (812) 854-6944

July 17, 1997 4324-563

Chris Freeman
EPD Site Representative
Crane Division, NSWC Bldg. 3260
Crane, IN 47522

Subject: Explosives Hazard Analysis Report: Recommendations

Ms. Freeman:

The following describes Morrison Knudsen's handling of the recommendations contained in the subject report.

"Design controls or establish administrative hazard controls for the protection of employees which assume the possibility that minor burning or explosion can occur in or around equipment during processing of explosives contaminated soils. Incorporate hazard briefing training regarding hazardous material content of soils and potentials for explosive residues on equipment."

- This subject will be addressed initially and periodically during documented hazard briefings conducted as part of the "plan of the day" meetings. Employees will be made aware of the potential for burning or explosion. The principle control will be to minimize unnecessary exposure to the hazard by keeping workers clear of potential dangers. Explosion hazards, plus good operations protocol, dictate that unnecessary personnel be clear of explosive areas. Operations management will periodically review work practices to assist in minimizing personnel exposure to explosion hazards.

"Randomly monitor screener output soils during sampling to ensure that large lumps (1 1/2 inch or more) of soil are not being transported to the Facility for windrowing."

- Operations personnel will routinely monitor the screener output for lumps greater than 1 1/2 inch in diameter. This subject will be covered periodically during "plan of the day" meetings. Operations management will periodically inspect the screener output and soils delivered to the Bio-Facility to ensure lumps larger than 1 1/2 are not being transported to the facility for windrowing.

FCAPSCC7
app: 8/17/97

"Consider the use of portable water spray units, if necessary, for dust control purposes at the screening operation."

- Dust monitoring is currently a part of the operations plan. Water spray will be available at the job site and will be used should dust monitoring require it. It will be Morrison Knudsen's practice to minimize water usage due to the waste management impacts.

"Establish an equipment decontamination program wherein personnel are sufficiently familiar with the equipment to thoroughly clean tight clearance locations. Institute certification procedures for the removal of accumulated materials from all equipment exposures. Ensure that equipment attachments are cleaned before removal from a contaminated zone."

- These activities are covered under the existing procedure SOP 3.0 Decontamination of Facilities, Equipment and Personnel.

"Establish procedures and training which ensure clean components or requires wet component work conditions during maintenance and repair. Ensure that dust control covers are secured after maintenance and during equipment operations.

- All equipment will be decontaminated per SOP 3.0 prior to maintenance/repair. Decon prior to maintenance/repair is mandatory since the personnel performing those duties are not HAZWOPER trained and will not be allowed into the exclusion zone. Daily equipment inspections are performed prior to use of equipment and is used to ensure dust control cover's are secured.

"Establish inspection controls to ensure that only rubber-tired materials handling equipment vehicles are allowed in areas where explosive contamination may be present."

- The operations plan controls the vehicles and equipment allowed in the work area. Only rubber-tired vehicles will be used on this project.

"Install materials on power brush and scraper blades which will reduce the potential heat of friction or sparks. Floor cleaning operations should be under water dampened conditions where possible."

- The power brush being procured has nylon bristles and will be used with water dampened floor conditions or water dampened brush.

"Verify that laboratory bench oven installation instructions have been complied with. Compliance with recommended oven and stack clearances for heat loss is critical. Ensure that oven heat losses do not interfere with other lab operations or installed fire safety

FCRPSCC 7
Cyp. 8/17/97

equipment. Installation, location, and marking of an oven electrical disconnect switch is critical. Verify what the maximum operating temperature of installed oven is from the manufacturer since the present technical data does not provide that information. Verify the functioning of the oven's high limit shut-off based on that temperature. Verify functioning of shut-off reset based on manufacturer's procedures prior to operational use. Recommend installation of thermocouple as replacement of the breakable mercury filled thermometer. Locate a thermocouple temperature readout so that operator does not have to stand in front of oven doors to read oven temperature. Attach safety precautions and establish training requirements regarding dangers of potential oven pressure relief and the improper uses of the oven."

- All manufacturer's installation instructions have been followed. The recommendations listed above have also been complied with by following the O/M manual. A thermocouple has been procured to replace the glass thermometer. Personnel training will be provided on safe operations of the oven.

In general we agree with COMARCO's summary statement that the "operation of materials equipment listed herein has an acceptable safety risk as long as awareness training is accomplished, administrative controls are established, management review is conducted, and enforcement measures are maintained during the processing of explosive contaminated soils."

Sincerely,
MORRISON KNUDSEN CORPORATION

D Beall

Dave Beall
Project Manager

cc: B. Robertson file: 11.012.F

FINAL

EXPLOSIVES HAZARD ANALYSIS REPORT

FOR

SOILS BIOREMEDIATION PROCESS EQUIPMENT

JULY 7, 1997

Prepared For

Naval Surface Warfare Center
Crane Division
Crane, Indiana

Prepared By

COMARCO SYSTEMS
R.R. 6 BOX 28
BLOOMFIELD, IN 47424

FCK PSCC 7
[illegible] 5/17/97

SUMMARY

This explosive safety review of process equipment planned for a Soils Bioremediation Facility and cleanup sites was primarily based on the review of technical data incorporated in a 1992 Hazard Review of a KW Windrow Composter by Hercules Incorporated. COMARCO maintains that the explosives related hazards addressed in the Hercules Hazard Review apply to the contaminated soil handling operations of the Soils Bioremediation Facility. COMARCO considers the operation of the materials equipment listed herein as an acceptable safety risk as long as awareness training is accomplished, administrative controls are established, management review is conducted, and enforcement measures are maintained during the processing of explosive contaminated soils. The use of the Model L-160B sample drying oven is an acceptable safety risk as long as the manufacturer's installation safety instructions are certified.

FCR PSCO 7
app 8/17/97

1.0 INTRODUCTION

1.1 PURPOSE. The purpose of this Hazard Analysis Report is to provide Naval Surface Warfare Center. Crane Division with an evaluation of the explosive safety hazards associated with operating equipments planned for handling explosives contaminated soils during bioremediation processing.

1.2 APPROACH. The soils bioremediation process equipment listed herein were evaluated by COMARCO's Certified Safety Professional. Hazards were identified based on equipment specifications, work task descriptions, and expected exposures to explosive compounds. Recommendations for consideration by management were developed. This analysis relied on information furnished by the Government and observation of a soils screening practice.

1.3 OVERVIEW OF BIOREMEDIATION OPERATIONS. Naval Surface Warfare Center, Crane Division, Code 095, is finalizing its plans for management of a composting operation for treatment of explosives contaminated soil. The soil contains various percentages of explosive compounds which are Class 1 hazardous material. Bioremediation operations include the use of rubber-tired construction-type materials handling equipment to excavate contaminated soil sites and prepare the soil for transport. The contaminated soil is then transported to a Soils Bioremediation Facility on the Center. The soil is then windrow mixed with compost ingredients and repeatedly "turned" with special composting equipment. Upon successful completion of the bioremediation processing, the treated soil is transported for disposal. Explosive contaminated samples from the compost piles are planned to be daily tested in a portable electric bench oven to determine the percentage of moisture content.

FCR PSCC 7
app 8/10/97

2.0 HAZARD ANALYSIS

NOTE: Occupational safety, health, and environmental hazards, involved in the contaminated soil processing, have been assessed in the Soils Bioremediation Facility Pilot Scale Operational Plan and have not been addressed herein.

2.1 EQUIPMENT LIST. The following equipment planned for use in the bioremediation processing of explosive compound contaminated soils have been selected for analysis. This equipment is further defined within Section 10 of the Pilot Scale Operational Plan for the Soils Bioremediation Facility:

2.1.1 Portable Soil Screener. This piece of equipment will be used at an excavation site for processing contaminated soil. The screening process removes all material over 1-1/2 inches in diameter. A trommel (drum) within the screener mechanically sorts and screens the soil prior to it being fed into a truck or pile by a conveyor. The equipment contains its own diesel engine power source.

2.1.2 Semi-Tractor Truck and Live Bottom Trailer. This equipment will be used to haul screened contaminated soil from the excavation site to the Soils Bioremediation Facility. The 48 cubic yard capacity live bottom trailer contains a bulk materials transfer system which allows for a trailer controlled discharge of its material at the Soils Bioremediation Facility. The tractor trailer will also transport treated soil for final disposal.

2.1.3 Backhoe/Loader. This equipment will be used for excavating contaminated soil, loading the portable soil screener, and/or loading the live bottom trailer at the excavation site. This equipment is a construction standard 3-4 cubic yard bucket, rubber tired loader design.

2.1.4 Steer Skid Loader. This equipment will be used for moving contaminated soil at the excavation site and handling composted soil at the Soils Bioremediation Facility. This a construction standard 1/2 to 1/3 cubic yard rubber tired excavator.

2.1.5 Center Pivot Wheel Loader. This equipment will be used to adjust the shape of composted windrows at the Soils Bioremediation Facility. This equipment is a construction standard 6-7 cubic yard bucket center pivot rubber tired loader with a claw attachment. The loader will also be used to handle uncontaminated compost material at the Facility.

2.1.6 Hopper/Conveyor System. This equipment will be used to capture contaminated soil from the live bottom trailer and convey it to windrow piles during original windrow development. The 150 ton an hour capacity rubber tired conveyor will be towed by the live bottom trailer but contains its own power source.

2.1.7 Windrow Composter (Scarab). This equipment will be used to form piles of compost material, mix compost material and contaminated soil into a formed pile, and repeatedly "turn" the compost windrows over a period of time. This equipment is especially manufactured for the self-propelled continuous mixing and forming of materials within soil contained windrows.

ECK:PS007
cyp 8/17/97

The rubber tired composter has its own power source and incorporates high speed internal agitation of material as it remixes the length of compost pile material.

2.1.8 Mechanical Floor Cleaners. A power brush (sweeper) and scraper attachments will be used infrequently on existing process equipment to assist in the cleanup of soil residue within the Soils Bioremediation Facility.

2.1.9 Wheeled Tractor. A rubber tired warehouse tractor will be used for transporting personnel and samples to and from the windrow buildings and the laboratory.

2.1.10 Other Process Equipment. Other types of equipment, such as sumps, pumps, sprayers, tankers, etc., may come into contact with or be exposed to explosive contaminated soil, dust, or water during the soils bioremediation processing. Hazard analysis of these items have not been specifically addressed herein.

2.1.11 Portable Electric Bench Oven. This equipment will be used to dry sample quantities of composted soil as part of a laboratory process for determining the percentage of moisture content within compost rows. This oven is not Class A listed and is not designed for flammable atmospheres.

2.2 HAZARD IDENTIFICATION. The hazards addressed in this analysis are directly related to the sensitivity and ignitible characteristics of Hazardous Material Class 1 explosive compounds present in the soil at excavation sites. Test results indicate concentrations as much as 15,300 parts-per-million of RDX within these soils. Lower amounts of TNT and HMX compounds have also been measured. Accidental initiation of this material is potentially possible if the amount and sensitivity level coincides with an adequate energy source. Two examples of when an energy source initiation could occur during the soils processing are:

1) If explosive residue is tightly pinched due to metal-to-metal close tolerances, initiation of the explosive material may occur. Initiation may result in localizing burning or an explosion due to the friction generated energy.

2) The heat energy from the hot surface of an equipment's exhaust manifold or catalytic converter could result in the burning or ignition of accumulated explosive dust.

2.3 HAZARD EVALUATION AND RISK ASSESSMENT. A comprehensive evaluation of the potentials for initiating explosive compounds during the bioremediation processing of contaminated soils has been documented by Hercules Incorporated in a 1992 Hazard Review of a KW Windrow Composter. This Hazard Review was completed to identify safety critical areas in the design and operation of the composter. This Review was extensively referred to during COMARCO's assessment of the risks during analysis of the soils bioremediation process equipment. The risk assessment matrices (Attachment A) were adopted by COMARCO from MIL-STD-882 to provide a guide for quantifying equipment hazard probability and severity factors.

FSR PSCC 7 app 4/17/91

2.3.1 Portable Electric Bench Oven.

Hazard Risk Index = II D. Undesirable, decision by management required.

Discussion: Further evaluation and review of the placement and design of temperature controls for this equipment by the Government will be necessary. COMARCO's assessment is based on the known hazards associated with heating appliances. These hazards are further stressed in the manufacturer's installation and operation instructions. Such installation aspects as oven and exhaust stack clearances, grounding, electrical disconnect, operator warnings, etc. will need to be further evaluated prior to operational approval. It must be assumed by lab personnel that chemical out gassing during the drying process, even with the vented oven, may cause the spring loaded oven doors to open rapidly to relieve pressure. Laboratory operations may be affected by the oven radiant heat losses. The maximum operating temperature of the oven must be certified below the ignition temperature of any explosive compound to be dried.

2.3.2 Portable Soil Screener and Composter.

Hazard Risk Index = III D. Acceptable with review by management.

Discussion: The design characteristics of each machine offer multiple opportunities for explosives accumulation and tight tolerances for energy source development. The high speed operation of some internal components increases the probability that energy sources will be present. The total operation time of each machine is extensive during soils processing, which further increases the probability of explosive incident. The wear on both machines will tend to be higher because of the complex mechanical design and operational modes.

2.3.3 Live Bottom Trailer and Hopper/Conveyor System.

Hazard Risk Index = III D. Acceptable with review by management.

Discussion: The design and operating time of these units reduce the number of occasions for energy development which in turn reduces the probability of minor injury and equipment damage.

2.3.4 Power Broom and Scraper Attachments.

Hazard Risk Index - III D. Acceptable with review by management.

Discussion: The infrequent use of these attachments should reduce the number of energy development possibilities. Frequent cleaning opportunities should reduce possibility of the buildup of explosive chemical residue.

2.3.5 All other equipment in contact with contaminated soil.

Hazard Risk Index = III E. Acceptable with review by management.

FCR PSOW 1
app 8/17/97

Discussion: The occasion for energy source development is greatly reduced in the remainder of the equipment which comes in contact with explosive contaminated soil. It is also expected that accumulation of explosive material will be less.

2.4 HAZARD SUMMARY. In addition to the non-explosive occupational hazard communication requirements for employees, workers involved in soils processing must be advised of the dangers of potential minor burning and explosive incidents. Respect for the ignitible characteristics of explosive compounds is critical. This concern must also extend to the explosive hazards which may be present during equipment maintenance and repair.

FCR PSEC 7
app 8/17/97

3.0 RECOMMENDATIONS

NOTE: The majority of explosive hazard control recommendations are based on COMARCO's analysis of government furnished information, observance of screener operation, and review of lab oven location. It is important that the explosive safety related recommendations from the Hercules Incorporated KW Windrow Composter Hazard Review, along with recommendations from other explosive contaminated soils bioremediation projects, be considered by the Government along with occupational safety, health, and environmental hazard controls.

- Design controls or establish administrative hazard controls for the protection of employees which assume the possibility that minor burning or explosion can occur in or around equipments during processing of explosives contaminated soils. Incorporate hazard briefing training regarding hazardous material content of soils and potentials for explosive residues on equipments.

- Randomly monitor screener output soils during sampling to ensure that large lumps (1 1/2 inch or more) of soil are not being transported to the Facility for windrowing.

- Consider the use of portable water spray units, if necessary, for dust control purposes at the screening operation.

- Establish an equipment decontamination program wherein personnel are sufficiently familiar with the equipment to thoroughly clean tight clearance locations. Institute certification procedures for the removal of accumulated materials from all equipment exposures. Ensure that equipment attachments are cleaned before removal from a contaminated zone.

- Establish procedures and training which ensure clean components or requires wet component work conditions during maintenance and repair. Ensure that dust control covers are secured after maintenance and during equipment operation.

- Establish inspection controls to ensure that only rubber-tired materials handling equipment and vehicles are allowed in areas where explosive contamination may be present.

- Install materials on power brush and scraper blades which will reduce the potential heat of friction or sparks. Floor cleaning operations should be under water dampened conditions where possible.

- Verify that laboratory bench oven installation instructions have been complied with. Compliance with recommended oven and stack clearances for heat loss is critical. Ensure that oven heat losses do not interfere with other lab operations or installed fire safety equipment. Installation, location, and marking of an oven electrical disconnect switch is critical. Verify what the maximum operating temperature of installed oven is from the manufacturer since the present technical data does not provide that information. Verify the functioning of the oven's high limit shut-off based on that temperature. Verify functioning of shut-off reset based on manufacturer's procedures prior to operational use. Recommend installation of thermocouple as replacement of the breakable mercury filled thermometer. Locate a thermocouple

FLR PSCC.7
app 8/17/97

temperature readout so that operator does not have to stand in front of oven doors to read oven temperature. Attach safety precautions and establish training requirements regarding dangers of potential oven pressure relief and the improper uses of the oven.

FCR PS007
4/3/8/17/97

ATTACHMENT A

HAZARD ASSESSMENT MATRIX

FREQUENCY OF OCCURENCE	HAZARD CATEGORIES			
	I CATASTROPHIC	II CRITICAL	III MARGINAL	IV NEGLIGIBLE
(A) FREQUENT	1A	2A	3A	4A
(B) PROBABLE	1B	2B	3B	4B
(C) OCCASIONAL	1C	2C	3C	4C
(D) REMOTE	1D	2D	3D	4D
(E) IMPROBABLE	1E	2E	3E	4E

HAZARD RISK INDEX	SUGGESTED CRITERIA
1A, 1B, 1C, 2A, 2B, 3A	UNACCEPTABLE
1D, 2C, 2D, 3B, 3C	UNDESIREABLE (MANAGEMENT DECISION REQUIRED)
1E, 2E, 3D, 3E, 4A, 4B	ACCEPTABLE WITH REVIEW BY MANAGEMENT
4C, 4D, 4E	ACCEPTABLE WITHOUT REVIEW

REFERENCE MIL-STD-882C

FCC PSCC 7
6/27/97

FCR-FSCC 7
5/17/97

HERCULES INCORPORATED
MISSILES, ORDNANCE & SPACE GROUP
ALLEGANY BALLISTICS LABORATORY
ROCKET CENTER, WEST VIRGINIA

HAZARD REVIEW OF WILEY MILL

MAY 1990

T. A. GROCE

PREPARED FOR

U. S. ARMY TOXIC and HAZARDOUS MATERIAL AGENCY
ABERDEEN PROVING GROUND, MARYLAND

AC2042-520-03-001

HERC NO. 90-21

FCK1X001
9/8/17/97

WARRANTY

"Hercules warrants that it has performed the analysis required by the statement of work in a safe and competent manner and in accordance with the standards employed by HERCULES in performing the same or similar analysis for itself. ANY OTHER PROVISIONS OF THIS AGREEMENT TO THE CONTRARY NOT WITHSTANDING, THIS WARRANTY IS IN LIEU OF ALL OTHER WARRANTIES EXPRESS OR IMPLIED, WHETHER ARISING BY LAW, CUSTOM OR CONDUCT INCLUDING WITHOUT LIMITATION, THOSE OF MERCHANTABILITY OR FITNESS FOR A PARTICULAR PURPOSE, THAT ACCIDENTS OR HAZARDS OF ANY KIND WHATSOEVER WILL BE ELIMINATED, THAT ANY PARTICULAR STANDARD OR CRITERION OF HAZARD OR ACCIDENT ELIMINATION OF ANY KIND WHATSOEVER WILL BE ACHIEVED OR THAT ANY PARTICULAR OR ANTICIPATED RESULTS OF ANY KIND WHATSOEVER WILL BE ACHIEVED BY OWNER'S USE OR APPLICATION OF ANY OF THE INFORMATION, ADVICE, RECOMMENDATIONS OR SERVICES PROVIDED IN WHOLE OR IN PART BY HERCULES. ALL SAID INFORMATION, ADVICE, RECOMMENDATIONS OR SERVICES ARE FOR THE SOLE USE OF OWNER AND ARE USED AT OWNER'S RISK. THE RIGHTS AND REMEDIES PROVIDED HEREIN ARE EXCLUSIVE AND IN LIEU OF ANY OTHER RIGHTS OR REMEDIES WHETHER ARISING BY LAW, CUSTOM OR CONDUCT."

CAUTION

CONCLUSIONS PRESENTED IN THIS HAZARD ANALYSIS REPORT ARE BASED UPON THE HARDWARE (OR DESIGN), MATERIAL OF CONSTRUCTION, OPERATING CONDITIONS, PROCESS MATERIALS AND PROCEDURES AS THEY EXISTED AT THE TIME OF THE ANALYSIS (OR AS THEY WERE PRESENTED TO HERCULES FOR ANALYSIS). IF CHANGES IN ANY OF THESE PARAMETERS OCCUR IN THE FUTURE, THE CONCLUSIONS OF THE CURRENT HAZARD ANALYSIS MAY BE INVALIDATED.

FCRPS007
app 8/17/97

TABLE of CONTENTS

	Page No.
SUMMARY	1
OBJECTIVE	1
CONCLUSIONS AND RECOMMENDATIONS	1
INTRODUCTION	3
BACKGROUND	3
SCOPE and LIMITATIONS OF THE REVIEW	3
DISCUSSION	4
DESCRIPTION OF WILEY MILL	4
DESCRIPTION OF SAMPLE	4
HAZARD REVIEW	5
REFERENCES	7

LIST of TABLES

Table No.		Page No.
I	TYPICAL SENSITIVITY DATA FOR EXPLOSIVE CONTAMINATED SOIL AND SELECTED EXPLOSIVES	8
II	REACTIVITY OF EXPLOSIVE/SAND/WATER MIXTURES	10
III	POTENTIAL INITIATION SCENARIOS FOR OPERATION OF THE WILEY MILL	12

FCRFS007
4/7/8/1/77

SUMMARY

OBJECTIVE

The objective of this work is to review the use of a Wiley Mill for use in the homogenization of a explosive contaminated soil sample. This review will assess the potential fire and explosion hazards associated with the operation of the Wiley Mill for this service.

CONCLUSIONS AND RECOMMENDATIONS

It is concluded that the operation of a Wiley Mill in grinding explosive contaminated soil is not an explosive operation if the sample contains less than 4% explosive. Although the sample containing less that 4% explosive is non-explosive, it is not necessarily non-flammable and precautions must be taken to protect the operator and lessen the effects should a fire occur. Recommendations are made in this section and discussed in this report that should allow this operation to be conducted safely and reduce the risk and potential effects of an incident from the use of a Wiley Mill with explosive contaminated soil.

The following recommendations are made:

1. The most important recommendation is to assure that sample contains the "less than 4% explosive" that USATHAMA expects. The use of a sample with a greater percentage explosive or the inclusion of primary explosives may invalidate this hazard review.

2. Protect the operator from possible fire by conducting the grinding within a ventilated laboratory hood with the shield lowered during operation and by using safety goggles or glasses with side shields and fire retardant gloves and arm protection. If the mill must be operated with the shield raised, the operator should have the added protection of a face shield and fire retardant suit/coveralls/lab coat.

3. Clean up sample spills as soon as possible.

4. Use dust rated electrical equipment if available. If not available, prevent build-up of sample on electrical equipment, because a fire could result from heat or spark.

5. Avoid generating a dust cloud with a dusty sample.

HCR PSC07
eff: 8/17/97

6. Do not allow the mill to continue to run with material within the mill and no output. Establish a reasonable time to accomplish the grind and shut down if this time is exceeded so as to minimize overheating in the mill.

7. If the mill feed clogs, use a non-metallic tool to assist feed. Do not allow the tool to enter the grinding chamber.

8. Operators should be trained in the importance in following proper operating procedures and the importance of using the proper personnel protective equipment provided.

9. Electrically ground the mill, auxiliary equipment, and sample preparation surfaces.

HCR PS007
8/17/97

INTRODUCTION

BACKGROUND

The Army is currently investigating the use of composting for the remediation of explosive contaminated soils as an alternative to incineration. Hercules Incorporated recently completed a hazard review of a pilot composting reactor which bacteriologically treats explosive contaminated soil. As part of the overall study, samples are tested for explosives and byproducts and it is necessary that these samples be homogenized prior to being tested. A process for homogenization has been developed by the U. S. Geological Survey Geochemistry Section which utilizes a Wiley Mill for size reduction of the sample material.

SCOPE and LIMITATIONS OF THE REVIEW

The U. S. Army Corps of Engineers has contracted with Hercules/Allegany Ballistics Laboratory (ABL) through Purchase Order No. DACA31-90-P-1114 to conduct a hazard review of Wiley Mill for use in homogenizing samples from a study at Umatilla Depot Activity (UMDA). These samples are explosives contaminated soil compost samples. The scope of the review is limited to the Wiley Mill equipment that is planned to be used in homogenization process and excludes other areas of the process, such as subsequent handling of the sample material, and other equipment that might be used in the process, such as a Jones Splitter for separation of the sample. No specific safety/hazard analysis regulations, such as MIL STD 882 or ARRCOM R 385-4, have been invoked by the purchase order.

FCR Psec. 7
app. 8/17/97

DISCUSSION

DESCRIPTION OF WILEY MILL

The Wiley Mill is a grinding device utilizing rotating cutting blades against removable cutting bars (not in contact) through a screen to achieve particle size reduction. The mill is widely used and is available in a number of sizes. The mill at U.S.G.S. is a "Model 4" and is composed of the following components[1]:

a. Loading funnel - 3" diameter by 5" deep[2]
b. Grind chamber - 8" diameter by 3" deep
c. Cutting blades - 3" long
d. Cutting bars - 3" long
e. Screen - 2 mm openings
f. Collection hopper - 4" diameter by 6" deep

The overall dimensions of the mill are 15" wide by 23" deep by 23" high and the components are steel. The cutting blades are attached to a wheel that turns at 800 revolutions per minute. An 1/2 HP motor (not explosion proof) integral to the mill drives the cutter wheel.

ABL has several Wiley Mills in use in various laboratories to reduce particle size of propellant and explosive samples. The mills are each smaller than the U.S.G.S. mill, roughly 1/4 to 1/2 size. Since 100 % explosive samples are processed at ABL, special precautions are taken such as grinding the sample with dry ice and grinding remotely or with shielding and operator protection.

DESCRIPTION OF SAMPLE

The following description[1] is of the sample that has been processed by U.S.G.S. and it is anticipated that future samples would be similar.

> The sample (~1 gallon) contained 24% soil, 10% alfalfa, 41% horse feed, and 25% horse stable waste. The sample was moist when received and the first step was to dry the material in plastic trays (approximately 4" x 6" x 3") in a ventilated oven using room temperature air. The sample was dried overnight until visually dry and dry by feel. The material was hand processed to break-up clods then the sample was poured into the loading funnel of the mill (approximately 3/4 pint). The mill is located within a ventilated lab hood and the mill is operated with the operator in attendance. Occasionally the material would clog and the operator would have to

---

1 Information from Steve Wilson, U.S.G.S. Geochemistry Section

2 All dimensions are approximate to give a rough idea of the size

push the material using a wooden dowel. After the material passes through the screen and is collected, it is removed and the sample is split using a Jones Splitter.

The operator wore rubber gloves while manually sorting the material; however after sorting the only personnel protection was safety glasses. After the grinding operation, the mill was cleaned by disassembly, blowing with air, then washing with acetone. No unusual occurrences were observed during the milling operation.

HAZARD REVIEW

The use of a Wiley Mill in the homogenization of composted explosive soil has been reviewed for possible hazards. Only the unique hazards that are associated with the use of explosive contaminated soils in the Wiley Mill are addressed in this review; thus routine safety problems involving operation of this type of equipment (e.g. operator injury by the mechanical action of the mill, electric shock, improper operation) or the use of flammable solvents (i.e. acetone for cleaning) will not be discussed. It is felt that a laboratory, such U.S.G.S. has the experience to deal with these kinds of problems. Table III identifies several scenarios by which the explosive sample may be initiated and represent potential hazards with the Wiley Mill.

By the nature of the design and construction of the Wiley Mill, there are initiation sources readily available during operation. Table I lists the sensitivity of typical explosives and explosive contaminated soil. The cutting blades normally rotate against the bars with only a small clearance, which could be negated by wear, misalignment, or improper assembly. The mill operates at 800 rpm so the cutter blades move at a speed greater than 10 ft/sec, which is higher than the speed for which we have sensitivity data. This means that there can be sufficient stimuli to initiate the explosive in the soil. Table III identifies other possible initiation sources.

The safe operation of the Wiley Mill in this service does not depend so much on the avoidance of potential initiation stimuli as controlling the extent of possible reactions. Table II presents the reactivity of various explosive/sand samples. It is concluded from these data plus other corroborative results[6], that there should be no explosive reaction from any sample with less that 10 % explosive. [NOTE: These studies did not considered primary explosives so the results may not be valid if a sample contains primary explosives. The current effort, as well as the review of the Composter, is applicable to soils containing explosives such as TNT, RDX, HMX, etc.] Since the homogenization sample contain at most 4 % explosive, there should be no explosive reaction even if there is initiation within the mill. If there is sufficient initiation stimuli present, it is expected that there could be localized initiation of the explosive within the sample. This, in turn, might be immediately extinguished for lack of fuel or it may lead to a fire in flammable organic matter or other explosive in the sample. The worse case expected if initiation occurs in the mill is a mild fire.

FCR PS00 7
Cpp 8/17/95

Table III lists other less likely sources of ignition for the sample.

- If the mill continues to run with material in the grinding chamber, heat may build up eventually leading to thermal initiation. It is recommended that the mill be stopped when there is no output. A reasonable time for grinding the sample should be established and an excessive time should trigger a shutdown.

- If contaminated soil contacts electrical equipment, there could be initiation through thermal means or from exposure from an electric spark. Any sample spill or contamination should be cleaned promptly and the equipment should be grounded.

- If the sample is excessively dusty and a dust cloud is generated, ignition could be caused by a spark from electrical equipment or an operator. This combination of events is possible but not considered very likely.

- Should the mill clog or stop feeding, a common occurrence, the operator should use a non-metallic tool to restart the feed. Use of a metal tool increased the chance for localized initiation of explosive in the sample.

If the homogenization process were designed from scratch, different or modified equipment (e.g. dust rated electrical equipment) or process (e.g. remotely operated, conductive flooring) might be selected. However; the process should be able to conducted safely in a non-explosive rated area if the above suggestions are followed. The most important single precaution is assuring that the sample contains a maximum of 4% explosive. In all steps from selecting the sample, through preparing for shipment, receiving, drying, and preparation for grinding operators should be on the look-out for excessive explosive such as pockets of pure explosive that could cause a more severe reaction. A good opportunity for this inspection is during the breaking up of clods prior to loading the mill.

Operators performing the grinding should be trained in the importance of proper operation of the mill, keeping the area clean, visually inspecting the sample, and not deviating from approved procedures. It is suggested that the grinding continue to be done in a ventilated hood with the shield lowered when the mill is running. Eye protection goggles or glasses with side shields should be required as well as fire retardant gloves and arm protection (e.g. long Nomex^R gloves). If the front shield must be raised during operation, the operator should have additional fire protection such as flame retardant coveralls and a face shield. The level of protection should be consistent with a fire, not an explosion, since the sample should be non-explosive but *not necessarily non-flammable.*

PCRPSC01
Apr 4/17/

REFERENCES

1. J. H. Tate and T. A. Groce, "Hazard Review of the Fairfield Pilot Composter for the Treatment of Explosive Contaminated Soil," HERC No. 89-50, November 1989

2. A. T. Kucera, "Hazards Analysis of Incinerator Feed System," HERC No. 86-2, January 1986

3. R. J. Welberry, "Sensitivity Testing of Composted Samples," HERC No. 88-61, October 1988

4. "Engineering Design Handbook - Properties of Explosives of Military Interest," U. S. Army Materiel Command Pamphlet AMCP 706-177, January 1971

5. Kristoff, F.T., Ewing, T.W., & Johnson,D.E., "Testing to Determine Relationship between Explosive Contaminated Sludge Components and Reactivity," Final Report to USATHAMA prepared by Arthur D. Little Inc., January 1987

6. L. S. Treadwell, "Final Report - Reactivity Testing of Explosive Contaminated Soil Samples," Hercules Incorporated/Allegany Ballistics Laboratory, HERC No. 86-06, January 1986

F-CR PS001
app. 8/17/91

TABLE I

TYPICAL SENSITIVITY DATA FOR
EXPLOSIVE CONTAMINATED SOIL AND SELECTED EXPLOSIVES

MATERIAL	TEST[3]	THRESHOLD INITIATION LEVEL	REMARKS
osive aminated Soil	Friction, MPa	Range from 234 to 306 @ 3m/s & 380 to 520 @ 0.9 m/s	Dried Lagoon Sludge[4]
	Impact, J/sq m	Range from 0.8 E4 to 13.9 E4	Dried Lagoon Sludge[1]
	Impact, J/sq m	4.75 E4	Composted Sample[5]
	ESD, J	Range from 0.024 to 0.5	Dried Lagoon Sludge[1]
TNT	Friction, MPa	585 @ 2.4 m/s	Hercules Data
	Impact, J/sq m	5.25 E4	Hercules Data
	ESD, J	0.075	Hercules Data
	Impingement, m/s	193 [5/8x5/8" dia sample] 46 [1-5/8x5/8" dia sample]	Hercules Data Hercules Data
	Initiation Temp., deg C	570 @ 0.1 sec 465 @ 10 sec 328 @ 50 sec 275 @ 12 min 240 @ 30 min	AMCP 706-177 [6]
	Crit Ht-to-Exp @ 2 in dia	12 in	Hercules Data
	Crit. Dia.	< 0.27 in	Hercules Data

3 FRICTION & IMPACT TESTS CONDUCTED WITH STEEL-ON-STEEL COMPONENTS

4 REFERENCE 2

5 REFERENCE 3

6 REFERENCE 4

FOR PSOC 7
[illegible]

TABLE I (Con't)

TYPICAL SENSITIVITY DATA FOR
EXPLOSIVE CONTAMINATED SOIL AND SELECTED EXPLOSIVES

MATERIAL	TEST	THRESHOLD INITIATION LEVEL	REMARKS
HMX	Friction, MPa	220 @ 2.4 m/s	Hercules Data
	Impact, J/sq m	0.27 E4	Hercules Data
	ESD, J	0.075	Hercules Data
	DSC Exotherm Temp., deg C	250 Onset	Hercules Data
	Initiation Temp., deg C	380 @ 0.1 sec 306 @10 sec	AMCP 706-177
	Crit. Ht-to-Exp	3 in	Hercules Data
	Crit. Dia.	< 0.27 in	Hercules Data
RDX [cyclotrimethylene trinitramine]	Friction, MPa	313 @ 2.4 m/s	Hercules Data
	Impact, J/sq m	2.7 E4	Hercules Data
	ESD, J	0.075	Hercules Data
	Impingement, m/s	207	Hercules Data
	DSC Exotherm Temp., deg C	216 Onset 242 Peak	Hercules Data
	Initiation Temp., deg C	405 @ 0.1 sec 235 @ 15 sec	AMCP 706-177
	Crit Ht-to-Exp	2 in	Hercules Data
	Crit Dia.	< 0.27 in	Hercules Data

FOR PSCO 7
app 8/17/97

TABLE II

REACTIVITY OF EXPLOSIVE/SAND/WATER MIXTURES[7]

SAMPLE	TEST	RESULT	REMARKS
% RDX % WATER	CRITICAL DIAMETER	< 0.25 INCH	1.05 g/cc Density RADFORD TEST
% RDX % WATER % SAND	CRITICAL DIAMETER	1.5 INCH	1.26 g/cc Density RADFORD TEST
% RDX % WATER % SAND	CRITICAL DIAMETER	2.0 INCH	1.25 g/cc Density RADFORD TEST
	DEFLAGRATION-TO-DETONATION (DDT)	1 of 10 POSITIVE REACTIONS	1.33 g/cc Density RADFORD TEST
	ZERO GAP	0 OF 20 POSITIVE REACTIONS	1.34 g/cc Density RADFORD TEST
% RDX % WATER % SAND	DDT	0 OF 20 POSITIVE REACTIONS	1.43 g/cc Density RADFORD TEST
% TNT % WATER % SOIL	# 8 CAP	5 TRIALS - NO FIRES; NO EXPLOSIVE TEST	Sample Spiked w/ 10 % TNT[8]
	SPARK	5 TRIALS - NO FIRES; NO EXPLOSIVE TEST	

7 EXCERPTED FROM REFERENCE 5

8 REFERENCE 6

TABLE II (Con't)

REACTIVITY OF EXPLOSIVE/SAND/WATER MIXTURES

SAMPLE	TEST	RESULT	REMARKS
% TNT % WATER % SOIL	THERMAL STABILITY [48 HR @72 DEG C]	1 TRIAL - NO IGN; NO DECOMPOSITION ABL TEST	THIS SAMPLE SPIKED WITH 10 % TNT[6]
	BOE IMPACT	0 OF 10 POSITIVE REACTIONS	ABL TEST
	FRICTION	0 OF 5 TRIALS @ 330 LBF AND 8FPS ABL TESTS	
	ELECTROSTATIC DISCHARGE	10 TRIALS - NO REACTIONS @ 0.024 JOULE	ABL TEST
	DDT	NO REACTIONS - w/10 or 20 GRAM IGNITERS	ABL TEST
	U S GAP	3 TRIALS; NO DAMAGE TO WITNESS PLATE	ABL TEST
	FIRE TEST	1 TRIAL; NO REACTION	ABL TEST

FCR/SCC7
4/28/17

TABLE III

POTENTIAL INITIATION SCENARIOS FOR
OPERATION OF THE WILEY MILL

HAZARD	INITIATION SOURCE	RESULT	REMARKS
Cutter blade strikes/rubs ır because of misalignment, proper installation, etc.	Impact and/or Friction Steel/Steel	Localized initiation of explosive	Should be no explosion
Blade strikes foreign ıterial (Metallic) in mple being processed	Spark or Friction Steel/Metal	Localized initiation of explosive	
Cutter blade strikes n-metallic foreign material tone, etc.) in the sample ing processed	Friction Steel/stone	Possible localized initiation of explosive; damage to blades	
Mill output slows or ops allowing heat build-up	Thermal	Possible localized initiation of explosive	
Sample excessively dusty; ark available from ectrical equipment or om operator	Electric spark or Electrostatic Discharge	Initiation of dust cloud	Not very likely; requires dust cloud formation
Sample contaminates ectrical equipment	Electrical spark	Initiation of dust layer	Remove sample spills immediately
Sample contamination lowed to remain on ectrical equipment	Thermal	Initiation of dust layer	Remove sample spills immediately
Operator clears clogged ll with improper tool	Impact or Friction Steel/Metal	Localized initiation of explosive	Use only proper, non-metallic tools

FCR PS007
8/17/97

TABLE III (Con't)

POTENTIAL INITIATION SCENARIOS FOR
OPERATION OF THE WILEY MILL

HAZARD	INITIATION SOURCE	RESULT	REMARKS
Operator steps on spilled sample	Friction Leather/concrete	Possible localized initiation of explosive	Remove sample spills immediately
Sample contains excessive explosive	Impact or Friction Steel/Steel	Initiation of sample; fire and strong reaction	SEE TEXT

ORIGINAL

NAVFAC Southern Division/ Morrison Knudsen Corporation	District II RAC

FIELD CLARIFICATION REQUEST (FCR)

Delivery Order No.: 4324-0009	**Subcontract No.:** 4324- NA	**FCR No.:** 4324-0009-FCR-PS008
Pilot Scale Operational Plan, Site Safety and Health Plan		Page 1 of 1

Reference Documents: Pilot Scale Operational Plan Rev. 5 dated June 6, 1997, Appendix D; SOPs

Problem / Change Description:

Based on initial clean soil testing operations, the following changes are requested to the Field SOPs:

SOP 3.0 pages 4, 5, and 6 of 6
SOP 5.0 pages 1, 2, and 4 of 4
SOP 7.0 pages 2, 4, and 5,of 5.

All lines affected are marked with an X in the margin.

Initiated by	Signature:	Organization: Morrison Knudsen	Date: 07/31/97

Resolution:

If this FCR affects a subcontract, indicate CID number: N/A

Approval by MK PE	Signature:	Date: 7/31/97	**Approval by ROICC/NTR or RPM**	Signature:	Date 8/21/97
Approval by MK PjM	Signature: D Beall	Date: 7/31/97	Additional Reviews: By/Date Christine D. Freeman 8/21/97 NSWC Crane EPD		
Approval by MK QC	Signature: Steven Cory	Date: 7/31/97			
Approval by MK REG SPT.	Signature: Steven Cory	Date: 7/31/97			

Regulator Approval/Notification Recommended:

Yes ☐ No ☐ Approved except for 1 decon change 8/17/97

A:FCRPS001.DOC

FCR PSCC.X

potable water **rinse**; the rinse can be performed using **clean, unused** garden sprayers, spray bottles, or squeeze bottles.

3. If analysis of the material includes metals, **Day 0 and Day 60 sampling dates**, then rinse **the** equipment with a solution of 10% nitric acid ~~in the same~~ **over a dedicated** bucket or tub ~~that contains the potable water rinse~~; **the equipment should then be rinsed with potable water over the same bucket or tub.** The acid ~~can~~ **will** be contained in **small** spray or squeeze bottles; the nitric acid solution can be obtained from the laboratory. After the acid rinse, proceed to Step 4.

   If analysis of the material does not include metals, proceed to the next step.

4. Rinse **the** equipment with **laboratory** reagent grade water ~~in~~ **over another bucket.** ~~the bucket or tub that contains the potable water/acid;~~ This rinse can be performed using spray or squeeze bottles; the reagent grade water will be supplied by the laboratory.

~~5. If analysis of the material includes organics, then rinse equipment with isopropanol in a third bucket or tub; this rinse can be performed using spray or squeeze bottles; the isopropanol will be supplied by the laboratory; if analysis of the material does not include organics, proceed to the next step~~

~~6. Rinse equipment with reagent grade water in the bucket or tub that contains the isopropanol; this rinse can be performed using spray or squeeze bottles~~

OR wipe dry with a clean PAPER towels

5. **Allow the equipment to air dry and s**tore **the** equipment in

X CWS 5/17/99

FCR/SCCS

~~labeled~~ plastic bags or sheeting to prevent contamination after decontaminating. X

Cleaning of on-site laboratory non-disposable equipment will be performed as described above except emersion in the decontamination fluids may not be permissible. Spray bottles of cleaning and rinse fluids will be used. **All decontamination liquids shall be managed according to U.S. Navy EPD procedures.**

3.3.2 Compost Sampling Probe Equipment

1. **Brush or wipe (using disposable paper towels) the probe between sampling cross-section locations for a given pile (windrow). Any soils/compost removed shall be placed back onto that pile (windrow).**

2. **Prior to the probe being used on the next compost pile (windrow), the following decontamination procedures must be followed:**

   a. **Remove the Teflon tip from the probe by loosening the screw and sliding out the tip.**

   b. **Using a plastic awl poke out any material clogging the oxygen holes.**

   ~~c.~~ d. **Wet a second paper towel with potable water and wipe the exterior of the probe.** X

   ~~d.~~ c. **Wet a ~~second~~ paper towel with a Alconox soap water solution and wipe the exterior of the probe.** X

e. Wet a third paper towel with laboratory Reagent grade water and wipe the exterior of the probe.

f. Dry with a fourth dry paper towel any excess water from the probe.

g. Replace the probe tip after making sure it has been cleaned also and secure in place with the screw.

h. After the last use for the day and the equipment has been decontaminated, store the equipment in labeled plastic bags to prevent contamination after decontaminating.

3.3.3 Measuring Equipment

All measuring sticks will be dedicated to each individual windrow. The sticks will have any solids brushed off at the end of measurements for that windrow. Any solid residues shall be placed onto that windrow. The measuring sticks shall be stored adjacent to the windrows, next to the containment wall of the building.

The sticks shall be stored in plastic at the end of the Pilot Scale Test for disposal determination by the U.S. Navy EPD Representative.

3.4 Personnel Decontamination At The Bioremediation Facility

The Bioremediation Facility personnel decontamination area consists of a shower/locker room trailer with a change room area, lockers, lavatory, toilets and showers as described in Section 5.0 of this Operational Plan. Persons working within the Bioremediation Facility will operate in ~~Level C~~ (Modified Level D) PPE as described in the SSHP. Boot covers, Tyvek™ suits and disposable gloves will require no decontamination, and will be disposed of according to U.S. Navy EPD Procedures.

FCFPS008

1.0 PURPOSE

This procedure describes the methods which will be used to load amendment blends into windrow configurations for pilot scale testing.

2.0 SCOPE

This procedure applies to the Naval Surface Warfare Center, Crane, Indiana site for Bioremediation Facility pilot scale operations.

3.0 EQUIPMENT

The following equipment will be used to transport amendment blends to the composting buildings and load the blends into a windrow configuration for pilot scale testing:

3.1 Farm Tractor

The Farm Tractor is a John Deere model 7710. The tractor is used to power the grinder/mixer (PTO power) and to transport the grinder/mixer to and from the compost buildings. X CAS 8/17/97

3.2 Grinder/Mixer

The grinder/mixer is a Supreme model 700. The grinder/mixer is a 700 cubic foot capacity tub grinder commonly used in agricultural applications to blend and discharge livestock feed into feeding troughs. It has built in scales that provide a digital readout to the nearest ten pounds. It will be used to weigh amendments as they are being added to proportion the blend, and to chop and mix the amendment mixture.

3.3 Windrow Turner

The windrow turner is a Scarab model 20HYD450. This is a specialized piece of equipment designed to turn, mix and aerate a 20 foot wide windrow with a maximum height of 7 feet.

4.0 SAFETY AND HEALTH PRECAUTIONS AND CONTROLS

1. Use Modified Level D PPE including disposable dust masks when off loading, grinding, and loading amendments.

   ~~Add requirements for~~ Hearing protection ~~here based on results of sound level surveys.~~ is required within 15 feet of operating equipment.

2. Maintain clear distance within of approximately 15 feet path and wear high visibility vest when working ~~around~~ moving machinery. Stay in equipment operators line-of-sight.

3. Ensure all rotating equipment guards are in place and functional prior to equipment operation.

4. Lock out and tag out ~~Disengage~~ power to the PTO when removing any remaining material from the grinder/mixer using a broom or brush. At no time should a person reach into the bin or enter the bin of the grinder/mixer unless the unit is ~~disconnected~~ lockouted out and tagged out. from the PTO drive coupling.

5. All personnel shall maintain minimum 30 feet clearance from the front or rear of the windrow turner during turning of the windrows.

5.0 PROCEDURE

Each pilot scale recipe will consist of 60 cubic yards of material, 45 cubic yards of which will be the amendment blend, the remaining 15 cubic yards will be the 25% soil loading. The amendments for a given recipe will be combined in three or more ~~15 cubic yard~~ batches as described in SOP 4.0.

FCIL 1500 8

5.2 Shaping Amendment Portion of Windrow

Once amendments for all recipes within the building have been loaded into the two overlapping piles, the windrows will be shaped by the windrow turner. This will be accomplished by turning the amendments with the discharge flap on the back of the windrow turner adjusted to produce a windrow 4 feet 5 inches tall. The resulting windrow will be 20 feet wide at the base. Any miscellaneous amendment material disbursed during windrow formation will be collected and returned to its originating pile. The collection and floor cleaning will be performed using the steer skid loader as well as manual shovels and brooms. X CWS 8/17/97

3.4 Stacking Conveyor

The stacking conveyor is a trough belt conveyor which is used to convey the screened material from the discharge of the screener to the live-bottom trailer.

4.0 SAFETY AND HEALTH PRECAUTIONS AND CONTROLS

1. **Follow explosives Handling Procedures as required by U.S. Navy.**
2. Use Modified Level ~~C~~ D PPE per the Site Safety and Health Plan (SSHP). Personnel shall avoid direct contact with contaminated soil as much as possible.

   ~~Add requirements for~~ hearing protection is required with 15 feet of operating equipment. ~~here based on results of sound level surveys.~~
3. Maintain clear distance within ~~of~~ approximately 15 feet and wear high visibility vest when working ~~around~~ moving machinery path. Stay in equipment operators line-of-sight. Ensure back-up alarms are operational on equipment.
4. Ensure all rotating and conveyer equipment guards are in place and functional prior to equipment operation.
5. Ensure Screener is operated on level ground and is properly locked and stabilized in position.
6. Know location of emergency stop switch on Screener control panel.
7. Shut-down Screener and remove key prior to refueling and servicing.
8. Ensure trailer brakes are locked on Semi-Tractor and Live-Bottom Trailer prior to loading.

3.5 Center Pivot Loader

The rubber tired loader is a Caterpillar 966F and is used for moving larger quantities of material, particularly when loading trucks.

FCRP5008

3. Lower and extend the conveyor using the fine conveyor cylinder switch on the control panel.

4. Insert locking pins in side frame.

~~5. Adjust support chains as necessary to level the outboard pulley to the screen frame.~~

CJS 8/17/97

5.2.3 Starting The Components

1. Increase engine speed to 1800-2000 RPM.

2. With the fines conveyor speed adjustment at 0, start the fines conveyor and increase to desired speed. Check the belt tracking and alignment and adjust if necessary.

3. With the drum speed adjustment at 0, start the drum and increase to desired speed.

4. With the feed conveyor adjustment at 0, start the feed conveyor and increase to desired speed. Check the belt tracking and alignment and adjust as necessary.

5.3 Loading Screener

Excavated soil will be loaded directly in the screener hopper with the backhoe for processing.

1. Begin feeding carefully to be sure that the screen speeds are suitable.

2. The loader operator must use good judgement when loading the screen. Any objects which could severely damage the screen must be separated before loading into the hopper.

3. Generally, load material into the front end of the hopper.

4. Operate the prescreen whenever necessary to remove large material from the top. Make sure no one is standing in the dump area before operating

FCEB008

the prescreen.

5.4 Product Handling to Truck

Screened material will be conveyed from the screener unit directly into the tractor trailer bed via the stacking conveyor? or ~~into the~~ by the Center Pivot Loader. X

5.5 Rejected Material

Rejected material from the screening process will be discharged into a **lined** pile. The material will be segregated into separate **lined** piles based on material type, i.e., wood waste, rocks, and other.

Comment: ~~The~~ The Center Pivot Loader should not leave the Biofacility once the stacking conveyor is received.

ORIGINAL

NAVFAC Southern Division/ Morrison Knudsen Corporation	District II RAC

FIELD CLARIFICATION REQUEST (FCR)

Delivery Order No.: 4324-0009	**Subcontract No.:** 4324- NA	**FCR No.:** 4324-0009-FCR-PS009
Pilot Scale Operational Plan, Site Safety and Health Plan		Page 1 of 1

Reference Documents: Pilot Scale Operational Plan Rev. 5 dated June 6, 1997 and Pilot Scale QAPP Rev. 4 dated June 6, 1997.

Problem / Change Description:

Based on initial clean soil testing operations, the following changes are requested:

1). Pilot Scale QAPP: Reduce the quantity of sample jars required for laboratory analysis by combining certain samples. Modify Section 4, page 7 of 34 per attached marked up page.

2). Pilot Scale Operational Plan Appendix F; Revise per atteched marked up pages F-8 & F-9. Revisions clarify duplicate frequency descrepancy (5% vs 1 per 24)

All lines affected are marked with an X in the margin.

Initiated by	Signature: Don Mitchell	Organization: Morrison Knudsen	Date: 08/11/97

Resolution:

If this FCR affects a subcontract, indicate CID number: N/A

Approval by MK PE	Signature: Don Mitchell	Date: 8/11/97	**Approval by ROICC/NTR or RPM**	Signature: Bob Rubert	Date 8/21/97
Approval by MK PjM	Signature: D Ball	Date: 8/12/97	Additional Reviews: By/Date Christine D Freeman NSWC Crane EPD 8/21/97		
Approval by MK QC	Signature: Steven Cory	Date: 8/13/97			
Approval by MK REG SPT.	Signature: Steven Cory	Date: 8/13/97			

Regulator Approval/Notification Recommended:

Yes ☑ No ☐ Approval w/ mod denial of decon issue Carol Witt Smith 8/19/97

A:FCRPS001.DOC

FCR PS009

Windrow/Compost Sampling Schedule (off-site analyses) - Pilot Scale				
Parameter	**Analytical Method**	**Number of Samples per Sampling Event**	**Volume Required per sample**	**Schedule**
~~Explosives (full list)~~	~~8330~~	~~3 per cross-section (12 total)~~	~~8 ounces~~	~~Day 0, 7, 14, 21 and 28 0, 5, 10, 20, 30, 40, and 60~~
TCLP-metals	1311, 6010, 7470	3 per cross-section (12 total)	8 ounces both Analysis	Day 0 and ~~28~~ 60
Metals (barium, cadmium, total chromium, lead)	6010	3 per cross-section (12 total)	~~8 ounces~~ MAY be done using 8 ounces.	Day 0 and ~~28~~ 60
TOC	9060	3 per cross-section (12 total)	8 ounces (~~both~~ ALL 3 analyses may be done using 8 ounces of soil)	Day ~~0, 7, 14, 21 and 28~~ **0, 5, 10, 20, 30, 40, and 60**
TKN	EPA 351.3	3 per cross-section (12 total)		Day ~~0, 7, 14, 21 and 28~~ **0, 5, 10, 20, 30, 40, and 60**
Explosives (Full List)	8330	3 per cross-section (12 total)		

Once process samples have shown that explosive concentrations have been consistently reduced over time for one or more compost piles or mixtures, a confirmation sample will be collected. Confirmation samples are anticipated to be collected on Day ~~28~~ **60** of processing. However, should processing be extended, confirmation samples will be completed at the end of the time extension. Confirmation samples will be collected using procedures in Table 4-4.

Treated compost which does not meet the process goals for TNT and RDX using all mixtures may also require off-site disposal, especially if it cannot be placed in the on-site landfill. *Soil and/or treated compost which requires off-site disposal will be* stockpiled and sampled at a frequency to be determined by the Project Manager and the Navy. This task will be implemented during Full Scale Operations.

FCR PS 009

SECTION 3.0
PROCESS MONITORING MEASUREMENT AND SAMPLING PROCEDURES

3.1 PROCESS MEASUREMENTS

Process monitoring field measurements and samples will be collected from the sampling locations shown in Figure 1-1 in Field SOP 1.0 in Appendix D. Sample locations other than those that are pre-designated will be clearly identified in the field logbook. The sampling schedule is shown in Table 1-3 of this appendix. A summary of the process monitoring program is provided in Table 3-1.

Field measurements will be collected only with kits, instruments, tools, gauges, or other measuring devices that are controlled, calibrated, adjusted and maintained in accordance with the maintenance and calibration requirements described in Field SOP 1.0 in Appendix D.

TABLE 3-1
SUMMARY OF PROCESS MONITORING PROGRAM

TASK	PARAMETERS	SAMPLING FREQUENCY	FIELD DUPLICATES	
Oxygen level monitoring	oxygen	6 per cross-section (24 per event)	~~5% (~~at least one per event~~)~~	X
Temperature Monitoring	temperature	6 per cross-section (24 per event)	~~5% (~~at least one per event~~)~~	X
Moisture Level Monitoring	moisture	3 per cross section (12 per event)	~~5% (~~at least one per two events~~)~~	X
pH Level Monitoring	pH	1 per cross section (4 per event)	~~5% (~~at least one per 5 events~~)~~	X

3.2 QA/QC MEASUREMENTS AND SAMPLES

QA/QC measurements and samples will be collected to ensure that representative and reproducible data are obtained. QA/QC measurements associated with process monitoring field measurements are described below.

FCR PS 009

3.2.1 Field Duplicate Measurements

ZH

Field duplicate data will be evaluated to determine potential variability introduced by sampling or measurement techniques. One duplicate sample or measurement will be collected for every ~~20~~ or fewer samples or measurements to qualitatively evaluate precision. The precision of field duplicate measurements will be determined by calculating the relative percent difference (RPD) between the original and the duplicate measurement. The calculation for RPD is provided in Section 12.0 of the **approved** Pilot Scale QAPP.

X

3.3 DECONTAMINATION PROCEDURES

Window No other SOP

Probes shall be decomed after each reading

Procedures for decontamination of large equipment, sampling equipment, and personnel are described in Field SOP 3.0 in Appendix D. Large equipment will be decontaminated in a designated decontamination facility. All non-disposable sampling equipment will be decontaminated after each ~~sample or measurement~~. Personnel will remove and dispose of or clean PPE within the designated personnel decontamination area. The extent of known contamination will determine the degree of decontamination required. If the extent of contamination cannot be readily determined, cleaning will be performed according to the assumption that the equipment is highly contaminated. The windrow machine will be inspected between windrows and all loose dirt will be swept or brushed off the exterior.

Decontamination water from the large equipment decontamination facility will be stored in a dedicated tank. Decontamination water and water collected in sumps will either be ~~recycled as compost process water or~~ transported to a wastewater treatment facility at Rockeye or Mine Fill A **or disposed according to Navy EPD procedures,** as described in Section 4.7 of the approved Pilot Scale QAPP.

deionized

Equipment rinsate blanks will be collected to ensure that sampling equipment is clean and that the potential for cross-contamination has been minimized or prevented. Rinsate blanks will be collected from the final ~~reagent grade~~ water rinse used in sample equipment decontamination as described in Section 4.6 of the approved Pilot Scale QAPP.

No other SOP

Decontamination of sampling probes is addressed in Appendix D of this Operational Plan.

Decontamination of sampling equipment is addressed in Appendix D of this Operational Plan.

ORIGINAL

NAVFAC Southern Division/ Morrison Knudsen Corporation	District II RAC

FIELD CLARIFICATION REQUEST (FCR)

Delivery Order No.: 4324-0009	**Subcontract No.:** 4324- NA	**FCR No.:** 4324-0009-FCR-PS010
Pilot Scale Operational Plan, Site Safety and Health Plan		Page 1 of 1

Reference Documents: Pilot Scale Operational Plan Rev. 5 dated June 6, 1997, Appendix E.

Problem / Change Description:

Based on initial clean soil testing operations, the following changes are requested:

1). Pilot Scale Operational Plan Appendix E, Soil Excavation Plan; Modify Figure E-1 per attached.

Reduce the size of exclusion zone due to less quantity of soil required than originally anticipated. Relocate soil screener, contamiantion reduction zone, and truck loading area for improved operations.

Initiated by	Signature:	Organization: Morrison Knudsen	Date: 08/11/97

Resolution:

If this FCR affects a subcontract, indicate CID number: N/A

Approval by MK PE	Signature:	Date: 8/11/97	**Approval by ROICC/NTR or RPM**	Signature:	Date 8/21/97
Approval by MK PjM	Signature: D Beall	Date: 8/13/97	Additional Reviews: By/Date Christine D. Freeman NSWC Crane EPD 8/21/97		
Approval by MK QC	Signature: Steven Cory	Date: 8/13/97			
Approval by MK REG SPT.	Signature: Steven Cory	Date: 8/13/97			

Regulator Approval/Notification Recommended:

☑ No ☐ Approved Carol 8/19/97

A:FCRPS001.DOC

FCRPS010

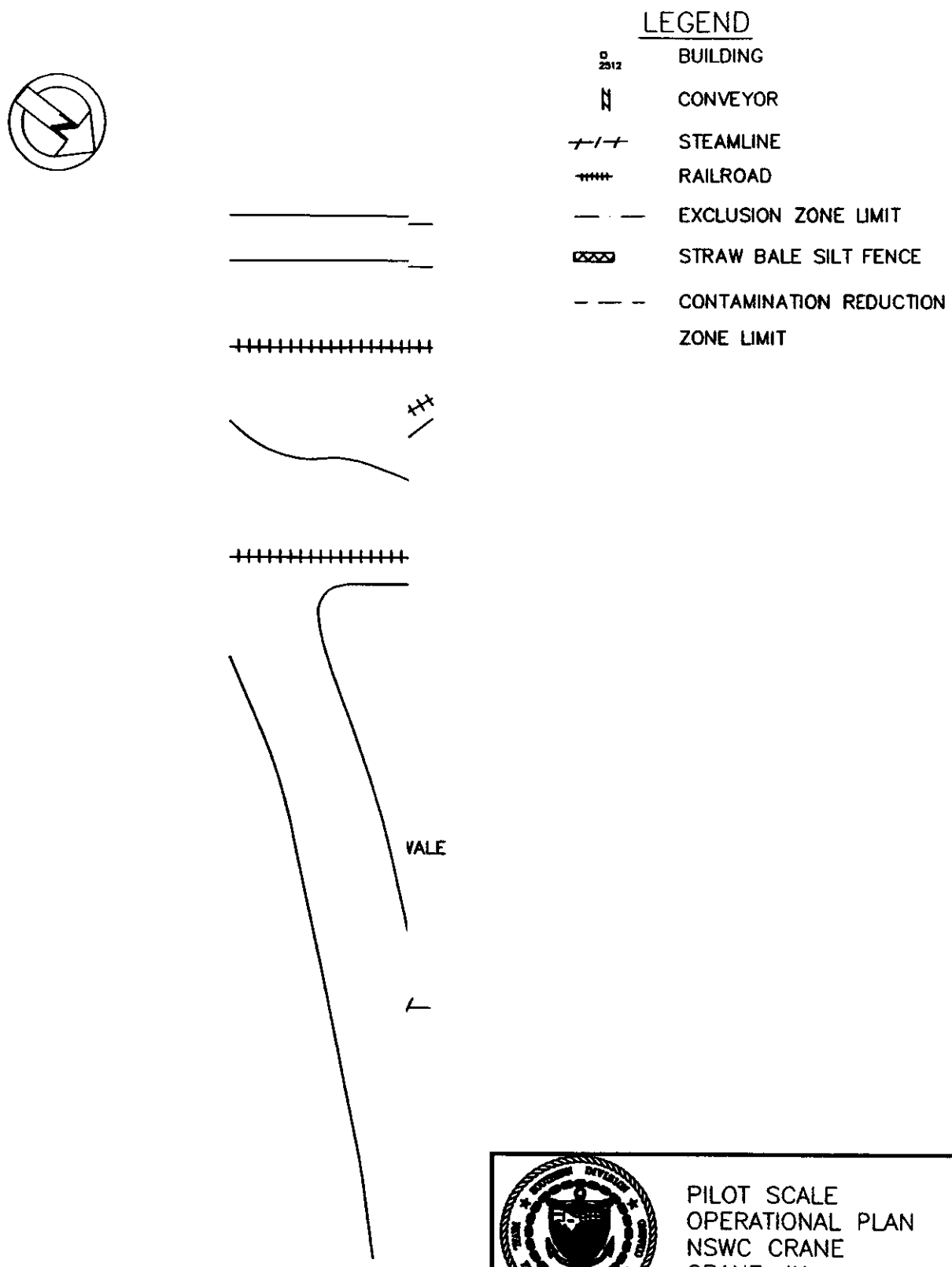

PILOT SCALE
OPERATIONAL PLAN
NSWC CRANE
CRANE, IN

FIGURE E-1
SOIL EXCAVATION PLAN
MINE FILL A, BLDG 153

DWG DATE: 8/11/97 | DWG NAME: GRIDLOC1

NAVFAC Southern Division/ Morrison Knudsen Corporation	District II RAC ORIGINAL

FIELD CLARIFICATION REQUEST (FCR)

RECEIVED JUL 15 1997 DIVISION ... OFFICE U.S. EPA - REGION 5 Toxics Division

Delivery Order No.: 4324-0009	Subcontract No.: 4324-	FCR No.: 4324-0009-FCR-027
ASPHALT APRON AND BIB		Page 1 of 3

Reference Documents (Affected Document No., Revision No., Title):
Construction DWG # C-100, C-103, & C-107

Problem / Change Description:

1. To reduce the potential spread of contamination during personnel egress ~~form~~ from the exclusion zone through the contamination reduction zone to the showers, an asphalt bib should be constructed around the boot wash area to the shower facility.

2. To assist in clean-up of spilled amendment materials on the South side of the amendment wall a asphalt apron should be added to the South side of the concrete wall.

Initiated by	Signature: Lois J Bigley	Organization: Morrison Knudsen	Date: 07/01/97

Resolution:

1. Construct an asphalt bib around the boot wash area with an asphalt berm to prevent run-off form the asphalt draining under the shower trailer. See attached sketch .

2. Construct a 90' by 20' asphalt apron South the amendment wall. See attached sketch.

If this FCR affects a subcontract, indicate CID number: N/A

Approval by MK PE	Signature: Lois J Bigley	Date: 07/01/97	Approval by ROICC/NTR or RPM	Signature: [illegible]	Date 7/7/97
Approval by MK PjM	Signature: D Beall	Date: 7/1/97	Additional Reviews: By/Date Christine D. Freeman 7/9/97		
Approval by MK QC	Signature: Lois J Bigley	Date: 07/01/97			
Approval by MK REG SPT.	Signature: Steven Cory	Date: 07/01/97	FCR 028 changes the design of the bootwash bib.		

Regulator Approval/Notification Recommended:
Yes ☒ No ☐ ~~[illegible]~~ Carol [illegible]

A:FCRPAPER.DOC

Denied 8/14/97 Issue #4 the asphalt bib. Approved 8/14/97 apron [illegible] #7

SKETCH 1 ~ ASPHALT B/B

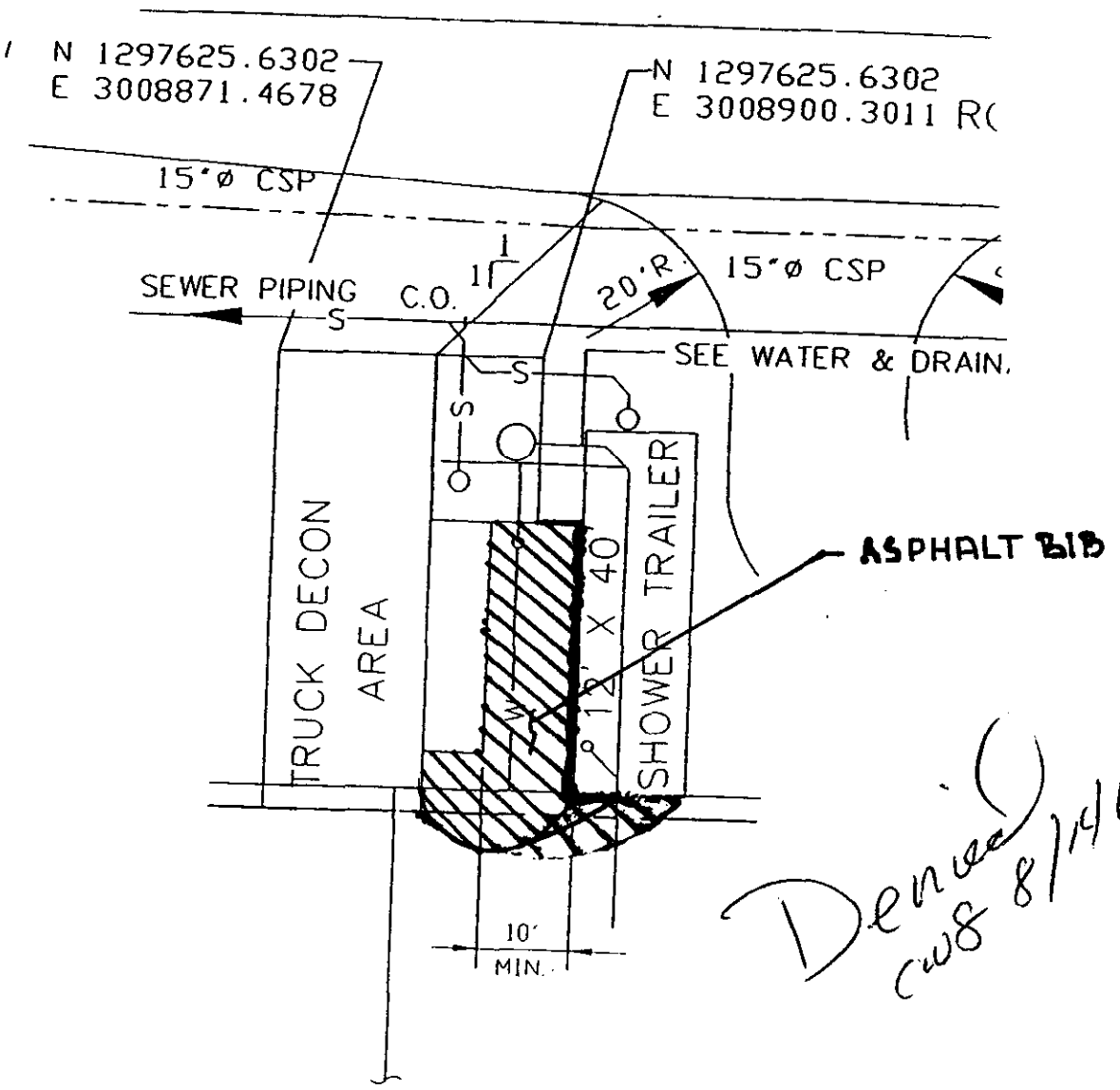

Denied
CWS 8/14/97

FCR #27
PAGE 2 of 3

MORRISON KNUDSEN CORPORATION

Sheet _____
Project _____ Contract No. _____ File No. _____
Feature _____ Designed _____ Date _____
Item _____ Checked _____ Date _____

SKETCH 2 - ASPHALT APRON

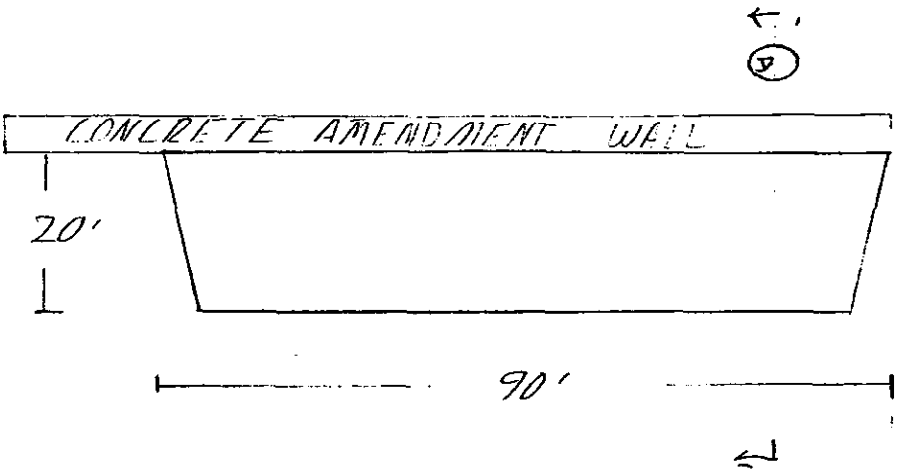

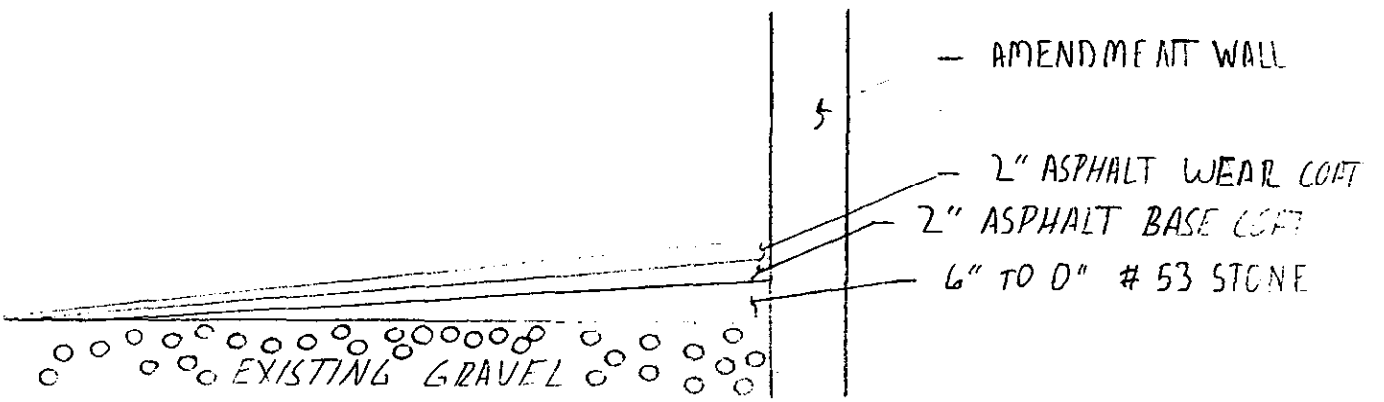

- SLOPE OF WORK -

ADD A 20'X90 ASPHALT APRON TO THE SOUTH SIDE OF THE AMENDMENT WALL

Approved CWB 8/14/97

ENG 375/91

FCR #27
PAGE 3 of 3

ORIGINAL

NAVFAC Southern Division/ Morrison Knudsen Corporation	District II RAC

FIELD CLARIFICATION REQUEST (FCR)

Delivery Order No.: 4324-0009	Subcontract No.: 4324-	FCR No.: 4324-0009-FCR-028
ASPHALT APRON AND BIB		Page 1 of 3

Reference Documents (Affected Document No., Revision No., Title):
Construction DWG # C-100, C-103, & C-107 , and FCR #27

Problem / Change Description:

1. Due to time constraints between Clean Pilot Scale and Contaminated Pilot Scale, in ~~witch~~ which the work can be performed, the limited nature of the work, to add an asphalt bib around the boot wash area, an apron at the south side of the amendment wall area and asphalt patches at the three newly placed water hydrants by the compost buildings, and the amount of previously booked work, asphalt subcontractors are either unwilling or unable to complete the minimal asphalt work needed at the Bioremediation Facility.

2. To assist in clean-up of spilled amendment materials on the South side of the amendment wall the concrete curb bumpers placed as truck marker, that must be removed and reset each time the South side of the amendment wall is clean-up, should be deleted. These bumpers must be set adjacent to the wall, if the truck is to dump it's load over the wall and therefore have no protective benefit to the amendment wall

Initiated by	Signature: Lois J. Bigley	Organization: Morrison Knudsen	Date: 07/20/97

Resolution:

1. Construct a 6" thick concrete pad around the boot wash area sloped to drain into the sump and a concrete curb to prevent run-off form the concrete and a 90' by 20' concrete apron South of the amendment wall See attached sketches.

2. Delete requirement for concrete curb bumpers at the amendment wall.

If this FCR affects a subcontract, indicate CID number: N/A

Approval by MK PE	Signature:	Date: 7/22/97	Approval by ROICC/NTR or RPM	Signature:	Date 7/23/97
Approval by MK PjM	Signature:	Date: 7/22/97	Additional Reviews: By/Date Christine D. Freeman 7/25/97 need sealant on the concrete see map for other comment		
Approval by MK QC	Signature:	Date: 7/22/97			
Approval by MK EG SPT.	Signature: Steven Cory	Date: 7/22/97	This design replaces FCR027 which is denied. CWS		

Regulator Approval/Notification Recommended:
Yes ☑ No ☐ Approved 8/14/97 w/ comments.

A:FCRPAPER.DOC

Sketch 1

CRZ CONCRETE PAD

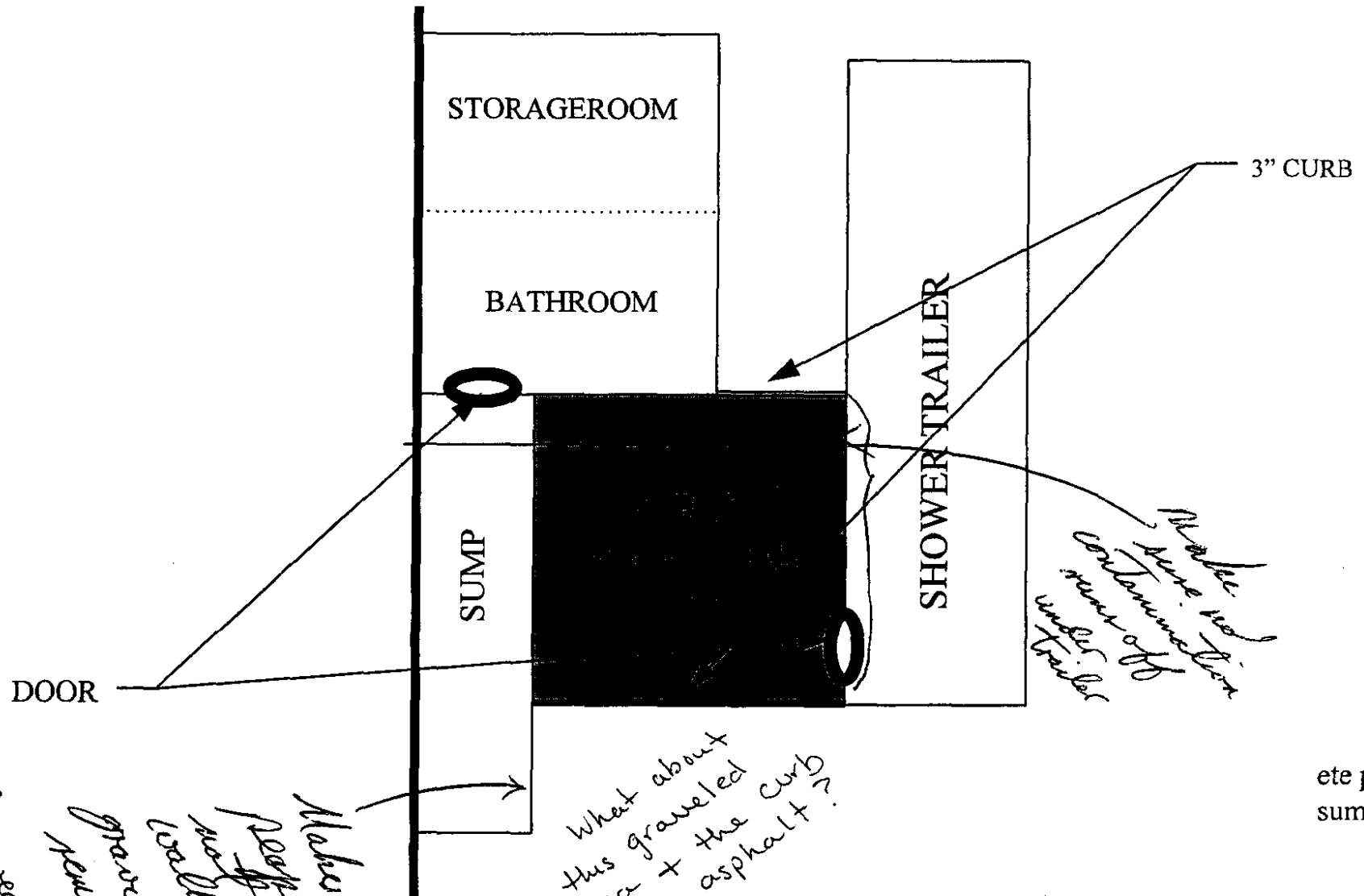

ete pad
sump

Approved w/ comments
CWS
8/14/97

Sketch 2

AMENDMENT WALL APRON

NORTH

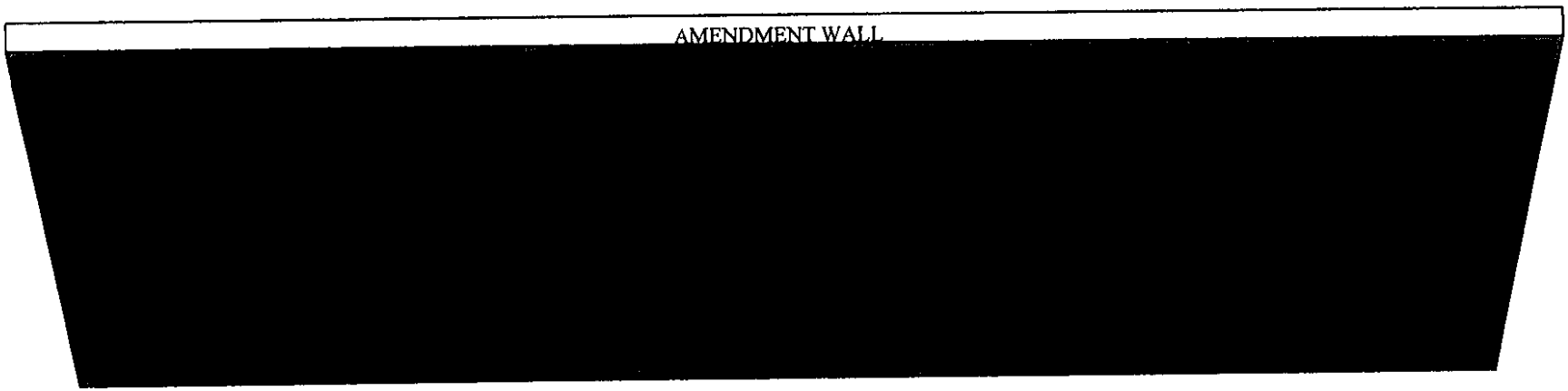

Deleted Members
Approved CWS
8/14/97

INSTRUCTIONS FOR
QUALITY ASSURANCE PROJECT PLAN
FOR PILOT SCALE OPERATIONS
ADDENDUM
Revision 5
August 14, 1997

1. Replace Section 1 through page 30.

2. Replace Section 4 through page 32.

3. Replace Section 6 all pages.

4. Replace Section 7 all pages.

5. Replace Section 13 all pages.

6. Delete page 2 and 3 of Table A-1 in Appendix A.

SECTION 1
PROJECT DESCRIPTION

1.1 INTRODUCTION

1.1.1 Project Background

Naval Surface Warfare Center (NSWC) Crane Division, is located in southwestern Indiana and provides support for equipment, shipboard weapons systems, and ordnance. NSWC Crane also supports the Crane Army Ammunition Activity (CAAA), including production and renovation of conventional ammunition, storage, shipment, and demilitarization and disposal of conventional ammunition.

Promulgation of the USEPA's Resource Conservation and Recovery Act (RCRA) hazardous waste regulatory program provided the impetus to identify and control environmental contamination from past practices at NSWC Crane. Corrective action programs established as part of the RCRA Hazardous and Solid Waste Amendments (HSWA) required NSWC Crane to address past releases of hazardous waste or hazardous constituents at selected Solid Waste Management Units (SWMUs).

Following promulgation of the USEPA's RCRA hazardous waste regulatory program, NSWC Crane filed notification and application to operate as a treatment, storage and disposal (TSD) facility in October 1980. Interim status was granted, subject to operating requirements and applicable technical standards found in Title 40 Code of Federal Regulations, Part 265 (40 CFR 265).

In April 1981, the Navy implemented the Navy Assessment and Control of Installation Pollutants (NACIP), subsequently known as the Installation Restoration Program (IRP). The purpose of the NSWC Crane IRP was to identify and control environmental contamination from past practices. As part of the IRP, an Initial Assessment Study (IAS) was conducted in April and May 1981, by a team from the Naval Energy and Environmental Support Activity (NEESA), the Ordnance Environmental Support Office, and the Army Corps of Engineers. Based on information from historical records, aerial photographs, field inspections and personnel interviews, the IAS identified seventeen potentially impacted sites at NSWC Crane. Fourteen of the seventeen sites were recommended for confirmation studies to include sampling and monitoring.

Pursuant to RCRA regulations and the IRP, hydrogeologic investigations, including ground water monitoring, were initiated at ten sites in 1981. Eight of these ten sites were later identified as warranting further investigation in the IAS. In November 1984, the Naval Facilities Engineering Command - Northern Division (NORTHDIV) contracted the Hazardous Material Technical Center (HMTC) to perform confirmation studies at several sites at NSWC Crane.

Corrective action programs established as part of the RCRA HSWA required NSWC Crane to address past releases of hazardous waste or hazardous constituents at the SWMUs. Accordingly, NSWC Crane submitted a Hazardous Waste Management Report to the USEPA in January 1985. The report listed the IAS-identified hazardous waste sites as SWMUs. Following the Hazardous Waste Management Report, a RCRA Facility Assessment was conducted to characterize the potential for releases of hazardous waste or constituents from 100 SWMUs.

On December 23, 1989, the USEPA issued the federal portion of the Final RCRA Permit for NSWC Crane to the US Navy and issued the permit renewal for a period of five years on July 31, 1995. This permit contains both the Federal Permit Conditions and State Permit Conditions, which were issued separately by the State of Indiana RCRA program. This permit established the HSWA Corrective Action Requirements and Compliance Schedules obligating the US Navy to perform RCRA Facility Investigations (RFIs) at 30 SWMUs, conduct Corrective Measures Studies (CMSs) and implement corrective measures if needed.

The RCRA Permit for NSWC Crane requires that RFI Phase I Environmental Monitoring Reports (EMRs) be submitted from many of the SWMUs at NSWC Crane. The purpose of the EMR is to identify and assess IRP Corrective Action SWMUs posing potential threat to human health or the environment due to contamination from past hazardous material operations. The EMRs for SWMUs #12/14 (Mine Fill A) and #13/14 (Mine Fill B) were completed in August 1992 (Halliburton NUS, 1992). The Pilot Scale Phase of the Interim Measures Cleanup which will be performed under this scope of work are a result of the findings presented in the EMRs.

1.1.2 Scope of Work and Overall Objectives

The scope of the first phase of interim measures cleanup includes Pilot Scale Operation at the Bioremediation Facility (Biofacility), located within NSWC Crane, under the direction of the Southern Division Naval Facilities Engineering Command (Southern Division). Remediation activities will be performed as specified by Delivery Order #0009, Statement Of Work #007, under the Environmental Remedial Action Contract (ERAC) No. N62467-93-D-1106.

The objective of the Pilot Scale testing is to define and optimize design and operation criteria for the overall purpose of interim measures cleanup (soil excavation, treatment and disposal) at four SWMUs at NSWC Crane (#03/11 Ammunition Burning Ground, #10/15 Rockeye, #12/14 Mine Fill A, and #13/14 Mine Fill B). Interim measures actions will be completed in compliance with State of Indiana and EPA Region 5 guidance and requirements. Data collected as part of this Pilot Scale Operation will be used to guide future remediation activities in the Full Scale Operations for interim measures cleanup.

Prior to instituting full scale interim measures cleanup, the Pilot Scale study will be conducted to evaluate and finalize soil treatment goals at the Biofacility, using soil excavated from a single SWMU, #12/14, Mine Fill A. Mine Fill A was chosen based on current operations, past activities, and contaminant levels.

The primary objective of the Pilot Scale phase is to:

- Determine optimum mix design and operational parameters which will meet Pilot Scale process goals of 30 mg/kg for TNT and RDX, as these are primary target compounds; and initial remedial levels for HMX and other target compounds (i.e. explosives).

Initial remedial goals are drawn from Preliminary Remedial Goals (PRGs) developed by Region 9 (USEPA, 1996b). TNT and RDX PRGs will not be used for this project. Rather, two process goals have been developed for these explosives, based on composting practices at other sites. Further background information on the initial remedial goals and TNT and RDX process goals is provided in Section 1.4.

Additional Pilot Scale objectives include:

- Identifying areas for Pilot Scale excavation at Mine Fill A, with respect to explosives,

- Determining "startup values" of explosives in soil entering the Biofacility,

- Determining if soil entering the Biofacility is hazardous with respect to metals and VOCs. Soil containing hazardous levels of metals or VOCs will be not be accepted into the Biofacility for treatment,

- Demonstrating effectiveness of composting on a large scale, and

- Properly disposing of waste water produced (i.e. storm water collected, decontamination water) in compliance with NPDES permit and POTW requirements, as applicable.

Performance goals serve to connect the Pilot Scale results and startup of Full Scale Operations. These goals include:

- Finalizing process goals for TNT, **HMX** and RDX **and other constituents**, which will be used during full scale operation.

- Providing data to evaluate the biological treatment efficiency based on the National Contingency Plan (NCP) remediation criteria for innovative treatment technologies.

Pilot Scale Operations will include:

1. Initial characterization of soil, to determine (a) areas for Pilot Scale excavation, (b) that soil to be excavated and treated at the Biofacility is not hazardous with respect to metals or VOCs, and © initial explosives concentrations in soil to be treated.

2. Excavation and treatment of approximately 200 cubic yards of soil from Mine Fill A.

3. Process data analysis and optimization of mixtures throughout treatment.

4. Confirmation sampling (treated compost piles). Confirmation sampling at the excavations will be deferred to Full Scale Operations. The excavation(s) created as part of the Pilot Scale phase will be sampled prior to temporary backfilling to determine what levels of explosives, metals and VOCs remain.

5. Data review to determine if treated soil must be reprocessed, placed in an on-site landfill, removed for off-site treatment, or placed back in the excavation as clean fill during Full Scale Operations.

6. Continuous evaluation of target parameters and initial remedial goals/levels and development of site-specific risk-based concentrations to confirm one or more of the following outcomes, depending on the compost piles evaluated:

    a. Mixture (recipe) is not suitable for meeting treatment goals. The pile(s) must be reprocessed using a different mixture, or

    b. Treatment is successful. The mixture (recipe) is finalized and proceed to determine if:

       -Compost is suitable for placement in on-site landfill, or

       -Compost is suitable for placement as backfill.

    c. Treatment is unsuccessful using all recipes. Treated compost must be shipped off-site for disposal or retreated using a new mixture developed during further bench scale testing. Off-site disposal sampling will be completed during Full Scale Operations.

These activities are summarized in Figure 1-1.

1.1.3 QAPP Preparation Guidelines

This Quality Assurance Project Plan (QAPP) presents the organization, objectives, planned activities, and specific Quality Assurance/Quality Control (QA/QC) procedures associated with the Pilot Scale study. Sampling and data evaluation activities are summarized in Figure 1-1, Sampling and Analysis Logic Diagram. Specific protocols for sampling, sample handling and storage, chain-of-custody, and laboratory analyses will be described. All QA/QC procedures will be structured in accordance with applicable technical standards, certain US Environmental Protection Agency's (USEPA) requirements, regulations, guidance, and technical standards. This QAPP was prepared in accordance with a guidance manual entitled, "Region 5 Model RCRA Quality Assurance Project Plan," May, 1993.

1.2 SITE/FACILITY DESCRIPTION

A brief description of the facility and associated features are presented in the sections below.

1.2.1 Location

NSWC Crane is located in southwestern Indiana and occupies the northern half of Martin County and parts of Lawrence, Green and Daviess counties, approximately 30 miles southwest of Bloomington (Figure 1-2). The site encompasses more than 100 square miles (62,463 acres) including 800-acre Lake Greenwood. NSWC Crane provides Naval support for equipment, shipboard weapons systems and ordnance. In addition, NSWC Crane supports the CAAA including production and renovation of conventional ammunition, as well as storage, shipment, demilitarization and disposal of conventional ammunition.

Mine Fill A is located in the west-central portion of NSWC, and occupies the south-central portion of Navy-designated Sheet 17 of the NSWC General Development Maps. Mine Fill A is accessible from NSWC Highway H-45 (Figure 1-3).

1.2.2 Facility/Size and Borders

Mine Fill A consists of 29 buildings and is bordered to the north/northwest by Highway H-45 and Highway H-17 along its remaining perimeter. The entire site occupies approximately 50 acres. The Pilot Scale will require 200 cubic yards of soil which will be excavated in the vicinity of Building 153. If sufficient soil is not available, soil in the vicinity of Building 158 may be used. Note Figures 1-4 and 1-5 for the locations of these buildings.

1.2.3 Natural and Manmade Features

Buildings at Mine Fill A provide storage, receiving, and filling of munitions/bomb materials. Local facilities include Mine Fill B to the southwest, an inert storage area to the west, the pyrotechnics production area to the north, and the Supply Department, a restricted explosive area and high explosives magazines to the northeast (Halliburton NUS, 1992).

Surface drainage is primarily off the eastern and western borders of Mine Fill A, via ditches and culverts. Surface discharge is forwarded to intermittent drainageways which flow to Turkey Creek, which flows south-southwest to merge with Boggs Creek (Halliburton NUS, 1992).

1.2.4 Topography

The topography is gently sloping from the northeast towards the southwest. Surface elevation varies from approximately 745 feet mean sea level (MSL) to the north to approximately 725 feet MSL along the western edge of Mine Fill A. See Section 5.1.1.4 of the August 1992 EMR (Halliburton NUS, 1992) for information concerning the site's topography.

1.2.5 Local Geology

Mine Fill A is covered with well-drained to moderately well-drained soil consisting of a broad range of grain sizes, depending on depth. Surface soils include a mixture of clay, silty clay and silt. Deeper soils include clay, sandy clay, silty sand and silty gravel. Depth to bedrock (Pennsylvanian Age Raccoon Group - sandstone, shale,

limestone) ranges from 45 to over 65 inches, depending on earth moving activities in the area. See Section 5.1.1.6 of the August 1992 EMR (Halliburton NUS, 1992) for more information.

1.3 SITE/FACILITY HISTORY

1.3.1 General History - NSWC Crane

In 1940, Congress authorized construction of a Naval Ammunition Depot (NAD) in southern Indiana, and in late 1941, the Burns City Ammunition Depot was commissioned. In 1943, NAD Burns City was renamed NAD Crane, and the Town of Crane was built to house the rapidly growing number of civil service employees. NAD Crane's overall mission was to load, prepare, renovate, receive, store and issue ammunition to the fleet.

During World War II, NAD Crane's mission expanded to include pyrotechnics production, mine filling, rocket assembly, field storage, torpedo storage, and ordnance spare parts and mobile equipment storage. During the 1950s, several new departments were created, the Ammunition Loading and Production Engineering Center (ALPEC) was transferred to Crane, and the Central Ammunition Supply Control Office (CASCO) was established. NAD Crane supplied ammunition to the fleet during the Korean and Vietnam conflicts.

In 1976, NAD Crane was renamed NSWC Crane. Its new mission was to provide support for ships and crafts equipment, shipboard weapons systems and assigned ordnance items, and to perform additional functions as directed.

In 1977, the Single Manager Concept was implemented. The CAAA was created, and the Army assumed ordnance production, storage, and related responsibilities as a tenant organization. Other functions remained Navy, and currently the Navy retains ownership of all real estate and facilities at NSWC Crane. Responsibility for overall station safety, security and environmental protection remains with the Commanding Officer, NSWC Crane.

Until the late 1970s and early 1980s, a variety of liquid wastes from both ordnance and non-ordnance activities were disposed on site without treatment. For example, ordnance-impacted waste waters were discharged into unlined ponds or into storm drains and ditches; waste waters generated from cleaning operations were discharged into an unlined pond; oily waters, battery acids, paint thinner, acetone, boiler blowdown and solvents were dumped behind buildings or into ravines; and waste hydraulic oil was spread on dirt roads. Since that time, treatment plants have been built, waste water streams have been connected to the sanitary sewer, and oils and solvents have been collected, segregated, and either recycled. sold, or properly disposed.

Air pollution control devices were not installed until the late 1970s. Therefore, ventilation systems at bomb loading facilities and the incinerator had no scrubber systems until the 1970s. Waste management activities included the burning of solid wastes and subsequent disposal of ash in unlined pits or gullies. Also, dye and dye-impacted materials have been disposed in on-site trenches.

Operations at NSWC Crane also included radiological activities and some radioactive materials were disposed on site during the early 1950s. Known burial grounds were excavated, decontaminated and released for unrestricted use in 1974.

1.3.2 Mine Fill A History

In September, 1942, Mine Fill A began production with the cast loading of depth charge bombs. Numerous items, including rocket heads, depth charges, projector charges and ammunition, were produced. The area was also utilized during the Korean and Vietnam Wars. Production rates were not available for the Korean War, but over six million bombs were manufactured at Mine Fill A and Mine Fill B during the Vietnam War era alone. Mine Fill A continued to produce ordnance until 1975, when production was suspended. Production was resumed in 1980. More details on production may be found in Sections 5.4.1 and 6.4.1 (similar operations at Mine Fill B), in the August 1992 EMR.

1.3.3 Past Data Collection Activities - Mine Fill A

Based on operational history, physical condition, location, waste characteristics, visual evidence, and analytical data, releases of explosives contamination to surface water and soil have occurred at Mine Fill A. Effluent, runoff and ditch water samples were collected in 1972 and 1979. TNT, RDX and HMX were detected in concentrations ranging from non-detected to 35.3 mg/L (RDX).

Several soil borings were installed in the vicinity of Buildings 153 and 158 in 1985. Results are summarized in Table 1-1, with estimated locations provided in Figure 1-5. The samples were analyzed for TNT, RDX and HMX only, and results showed the highest levels of explosives are in the vicinity of Building 153. Further discussion of surface water, ground water and soil sampling results may be found in Section 5.3.2 of the August 1992 EMR (Halliburton NUS, 1992).

1.3.4 Current Status

Mine Fill A is currently an active site. As of 1992, Mine Fill A was used for the production of 2,000-pound aerial bombs. Demilitarization activities are also conducted at Mine Fill A. Activities include the application of enamel and bituminous solvent coatings, rotary grit blasting, spray painting, propellant removal, and fuse and configuration changes. Ordnance compound particulate matter was exhausted through the ventilation system. Rinse and waste water containing TNT, Composition B, HBX-1, HBX-3, and H6 are potential sources. Chemical composition of these and other wastes generated at Mine Fill A are provided in Table 1-2.

According to the August 1992 EMR produced by Halliburton NUS, other potential wastes at Mine Fill A include sludge (containing explosives), pink water (TNT), grit blast residue (containing cadmium, chromium, lead and barium) and paint waste (containing chromium, lead, methylene chloride, acetone, ethanol, isopropanol, methanol, methyl ethyl ketone, methyl isobutyl ketone, naphtha, toluene and xylene).

Based on reports and documents reviewed for the site, and a current assessment of available information, concentrations of individual ordnance compounds in soils ranged from undetected to 15,300 mg/kg (RDX). It was not verified whether volatile organic compounds (VOCs) were tested or detected in Mine Fill A soils. Five paint booths are

authorized to operate in Building 155, and are equipped with particulate control features. However, volatile organics samples will be collected during initial excavation site characterization, based on field observations, and if paint wastes were associated with Buildings 153 or 158.

Approximately 11,000 cubic yards of impacted soil within the Mine Fill A are targeted for interim measures cleanup. A portion of this soil targeted for excavation will be transported to the Biofacility for Pilot Scale operations. Based on previous soil boring results (Table 1-1), the areas around Building 153 show higher levels of explosives contamination than Building 158.

Confirmation soil sampling within each excavated area will be discussed in the Full Scale Operational Plan and QAPP, which will be issued at the completion of the Pilot Scale Operation.

1.4 PROJECT OBJECTIVES

1.4.1 Specific Objectives and Associated Tasks

For this Pilot Scale operation, it will be necessary to gather sufficient information to evaluate the soil excavated for treatment and the effectiveness of each compost mix. Associated data collection activities are summarized in Table 1-3 and as follows:

Data Collection Task 1 - Initial Excavation Site Characterization

Previous data collected at the site (Mine Fill A) indicates that high levels of explosives contamination were detected in the vicinity of Buildings 153 and 158. Based on site history, wastes present at Mine Fill A may include TNT, RDX, HMX, metals and VOCs. Although explosives were detected in high concentrations, it is not clear if soil in the vicinity of these buildings is non-hazardous, with respect to 40 CFR 261. The Pilot Scale phase will focus on explosives and site-specific chemicals only.

This task has three analytical objectives:

1. Analyze the soil, primarily in the vicinity of Building 153 or Building 158 (backup in case Building 153 cannot be used during the Pilot Scale) for explosives. This data will primarily be used to identify areas to be excavated for Pilot Scale Operations. This data will not be sufficient to indicate full extent of contamination at Mine Fill A. Additional excavation at Mine Fill A will be completed during Full Scale Operations. This data will also be used as "entry " or "startup" concentrations for composting.

2. Analyze the soil for site-specific VOCs and metals to determine if other waste products are present. Certain observations will dictate a need for VOCs testing. **Observations and criteria include visibly stained soils, unusual odors, and PID readings exceeding resident background levels. If one or more of these criteria is discovered, additional samples for VOCs will be collected. Analysis will be approved by the Project Manager and U.S. Navy designee, as required. It is anticipated that "low level" (if any) VOC contamination will be present.** Site specific VOCs include methylene chloride, acetone, methyl ethyl ketone, methyl isobutyl ketone, toluene and xylene. These constituents will serve as indicators of the presence of paint wastes. Depending on VOC results, additional testing for naphtha, methanol, isopropanol and ethanol may be required. Site specific metals include barium, cadmium, chromium and lead.

3. Analyze the soil to determine if it is hazardous with respect to metals and VOCs. Soil will not be accepted into the Biofacility for treatment if it is hazardous with respect to these constituents.

Soil borings, approximately two-feet deep, will be installed using a drive sampler at or near the previous sampling locations shown in Figure 1-5. Soil will be collected from two depths (6 inches and 2 feet below ground surface) and tested for explosives, site-specific metals (barium, cadmium, total chromium and lead), TCLP-metals, and total VOCs (TCLP list and site-specific VOCs). One sample will be collected for every 25 cubic yards (approximately) to be potentially excavated.

Soil samples collected from each boring will also be screened with a PID and examined. Should PID readings be above background levels for the site, or staining/odors be observed, additional samples may be collected for VOCs analysis.

Based on explosives testing results, approximately 200 cubic yards will be excavated for the Pilot Scale and temporarily staged at Mine Fill A. If sufficient explosives-contaminated soil is not available at Mine Fill A for the Pilot Scale, excavation will focus on the use of Mine Fill B soils.

Soil will be excavated and passed through a screen to remove coarse fractions. Coarse fractions (gravel, cobbles, boulders) from the soil screen will be washed, as prescribed in the Operational Plan, and used as natural backfill.

Data Collection Task 2 - Equipment Wash Water/ Decontamination Water Sampling

Decontamination procedures described in Section 6.2 of the Pilot Scale Operational Plan will yield a quantity of water which may be used during initial windrow formation. Once the treatment process is underway, decontamination water will no longer be added to the process; only potable water will be used for moisture addition. Rock wash and other decontamination fluids will then be treated at a waste water treatment facility at Crane. The water will be sampled for explosives and other parameters, as required by the on-site treatment facility.

Solids and liquid which collect in Biofacility sumps will also be sampled for explosives. Similarly, the sump solids and liquids will be added to the composting process during the initial phase only.

Data Collection Task 3 - Storm Water Retention Pond Sampling

Residual surface runoff will be collected into storm water retention ponds. This water will be sampled as described in Section 4.0, and may be potentially used for water addition during windrow formation. Data will be evaluated to determine if water can be discharged per the limitations and requirements of Crane's NPDES permit.

If water cannot be discharged, it will be sampled for site-specific metals to permit use in

composting activities. If the water cannot be used during composting, it will be either treated and disposed at the on-site POTW or disposed of ~~off-site~~ **according to Navy EPD approved procedures.**

Data Collection Task 4 - Process Sampling

Each amendment mixture will be sampled prior to adding soil to be treated. The amendment material will be tested for TOC and TKN to develop a "startup" ratio of nitrogen to organic carbon. This data will be compared to TOC and TKN results from process testing.

Process parameters which will be tested on-site include pH, temperature, oxygen and % moisture. These parameters are further discussed in Section 7.2 and 8 of the Operational Plan.

Process parameters requiring off-site analysis include total metals (barium, cadmium, chromium, lead), TCLP-metals, TKN, TOC, and explosives (full Method 8330 list). Depending on the results of VOCs testing during Task 1, VOCs may be added to the list of process parameters.

Approximately 12 samples will be collected per compost pile at time intervals defined in Section 4.0. Explosives, TKN and TOC will be tested throughout the treatment process. Total metals (barium, cadmium, chromium, lead) and TCLP-metals will be tested at Day 0 and Da y ~~28~~ **60** (end of process). If metals are not detected in any particular pile, based on the Day 0 sampling results, metals testing at Day ~~28~~ **60** may not be required.

During the Pilot Scale, the full suite of explosive compounds (standard list - Method 8330) will be monitored during treatment. "Startup" concentrations and rates of decomposition of daughter compounds and other compounds versus TNT, RDX and HMX will be evaluated. The data will be evaluated to determine if direct correlation is found between percent reduction of TNT, RDX and HMX and percent reduction of other explosives, as TNT, RDX, and HMX are primary target compounds.

At the completion of the treatment process ~~(Day 28)~~, (**Day 60**) confirmation samples will be collected and submitted to the off-site laboratory for analysis of explosives, metals

(barium, cadmium, total chromium, lead), and TCLP-metals, depending on initial excavation site characterization results. Confirmation sampling will not be completed unless concentrations of TNT and RDX are at or below process goals.

Confirmation sample results will be compared to those levels in Table 1-4 to determine if TNT and RDX are below process goals and other parameters are below initial remedial goals (industrial PRGs). HMX degradation will also be closely evaluated. This data will be used to determine if treatment must continue using the same mixture, the mixture must be changed, treatment is complete or treatment has failed using all mixtures.

If treated soil does not meet process goals (i.e. TNT, RDX**, HMX**), it will be retreated using a different process mixture (recipe). Following reprocessing, if again the treated soil does not meet process goals, does not indicate a 40 percent or greater reduction in target compounds, and is unsuitable for placement in the landfill, it may require off-site disposal. This issue will be discussed during Full Scale Operations.

Data Collection Task 5 - Post-Excavation Sampling

Once soil boring sampling is completed and the results reviewed (Task 1), ***approximately*** ~~*a minimum of*~~ 200 cubic yards will be excavated for the Pilot Scale test. Additional soil excavation at Mine Fill A will be deferred to the Full Scale Operations phase.

Once soil has been removed, the Pilot Scale excavation at Mine Fill A will be sampled and temporarily backfilled from an approved source at Crane. The on-site borrow source has previously been sampled and approved based on analytical results which will be supplied prior to temporary backfilling operations.

A sampling grid will be laid out in the base of the Pilot Scale excavation(s), with a nodal spacing of 20 feet. Samples will be collected six inches below ground surface from each 20-foot by 20-foot grid block (base) and analyzed for explosives, site-specific VOCs (methylene chloride, acetone, methyl ethyl ketone, methyl isobutyl ketone, toluene and xylene) and metals (barium, cadmium, chromium and lead). Sidewalls will

be sampled every 20 feet and will not be gridded. The purpose of this sampling is to determine the level of contamination remaining in the excavation, with respect to explosives and potential site-specific contaminants. The data will be used during the Full Scale Operations to guide further excavation.

1.4.2 Project Target Constituents and Laboratory Data Use

1.4.2.1 Target Constituents

Three primary target constituents have been identified for the Pilot Scale operations: TNT, RDX and HMX. These parameters are present in many of the waste streams generated at Mine Fill A and have been detected in soil and surface water. Additional target constituents include site-specific metals and VOCs as these have also been identified in waste stored or generated at Mine Fill A.

1.4.2.2 Initial Remedial Goals

Soil will be excavated and treated to concentration levels which are protective of human health and ecology, as treated soil will be placed in an on-site landfill or used as backfill in the original excavation (Full Scale Operations task). Soil which is not successfully treated will **be managed in accordance with this QAPP.** Bench scale testing may be performed as an alternative to off-site disposal, to determine if other mixtures (recipes) can be used to improve treatment.

Pilot Scale testing success will be governed primarily by process goals for TNT and RDX (30 mg/kg, respectively) and remedial goal for HMX (34,000 mg/kg). Decreases in concentrations of other explosives will also be carefully evaluated. Process goals for TNT and RDX are further discussed below.

Preliminary Remedial Goals (PRGs) developed by Region 9 (USEPA 1996b) will be used as initial remedial goals for the remaining target constituents during the Pilot Scale phase. Industrial levels for the target constituents are listed in Table 1-4. Concentrations were derived by Region 9 using EPA toxicity values from the integrated risk information system (IRIS), updated through July 1996, HEAST, updated through May 1995, and EPA's National Center for Environmental Assessment.

Due to ongoing operations at Mine Fill A, industrial levels will be used as "ceiling levels" or initial remedial goals for treatment during the Pilot Scale. Reporting limits listed in Table 1-4 are provided by Southwest Laboratory (Broken Arrow, Oklahoma).

Initial remedial goals will be reviewed in the framework of the conceptual model for Mine Fill A, as well as the other SWMUs being considered for interim measure action. The conceptual model will be updated by the USEPA Region 5, using data collected during the Pilot Scale phase and assumptions and models used in current risk assessment activities. Initial remedial levels and any data generated during the Pilot Scale will be provided to the EPA to assist in risk assessment activities for NSWC Crane.

Two explosives, 2,4-DNT and 2,6-DNT, are considered Group B (probable human) carcinogens. PRGs for these explosives are 1,400 mg/kg and 680 mg/kg, respectively.

TNT and RDX Process Goals

As was demonstrated at the Umatilla Army Depot (UMDA) Project and the US Naval Submarine Base (project) site in Bangor, Washington, TNT and RDX are significantly degraded during composting. At the Umatilla site, concentrations of TNT and RDX were reduced from 1,574 ppm (TNT) and 944 ppm (RDX) to <30 mg/kg each after 20 days of treatment; and further reduced to 4 ppm (TNT) and 2 ppm (RDX), after 40 days of treatment (US Army Environmental Center, 1993, USEPA, 1994). Composting reduced the concentration of TNT in one kilogram of soil from 822 ppm to 8 ppm after 60 days of treatment at the Bangor site. Follow-up toxicological and leachability tests at the Umatilla site showed that a reduction in concentrations of TNT and RDX in treated soils provided a parallel reduction in toxicity and leachability of these contaminants (USEPA, 1996a).

An initial process goal of 30 mg/kg for TNT and RDX will be used during the Pilot Scale, as this level has been applied at previous sites to minimize the phytotoxicity effects of munitions compounds on plant species (USEPA, 1996a). This is especially important for areas which will be backfilled with treated soil and revegetated. The PRG established for soil cleanup at the Bangor facility was set at 30 mg/kg for TNT, as this level corresponded to "lifetime excess cancer risks between 10E-5 and 10E-6 under CERCLA and are protective for non-carcinogenic effects" (USEPA, 1993).

1.4.2.3 Performance Goals

The rate of degradation of TNT and RDX will be evaluated, based on the recipe used, and process goals for TNT and RDX will be finalized for full scale operation. Remedial goals and final process goals will be discussed, reviewed and approved by the Navy, IDEM and EPA prior to Full Scale Operations. These activities constitute the first performance goal.

The second performance goal will be to provide data to evaluate the biological treatment efficiency based on the CERCLA remediation criteria for innovative treatment technologies. The NCP preamble indicates 90% to 99% reduction of toxicity and mobility (leachability) as a guide for effective treatment. Previous studies have indicated that reductions in parent compounds and first series intermediate compounds were providing parallel reductions in toxicity and leachability based on combined chemical, toxicology and leachability data (USEPA, 1996b). Therefore, a 90% to 99% reduction in concentrations of contaminant compounds corresponds to a 90% to 99% reduction in toxicity and leachability and meets the NCP treatment performance guideline for composting of TNT, RDX and HMX. Applicability of this guideline will be finalized prior to Full Scale Operations.

1.4.3 Data Quality Objectives

Data Quality Objectives (DQOs) are qualitative and quantitative statements which specify the quality of the data required to support decisions made during interim measures cleanup, and are based on the end uses of the data to be collected. As such, different data uses may require different levels of data quality. There are at least five analytical levels which address various data uses and the QA/QC effort and methods required to achieve the desired level of quality. This project will utilize NEESA Level C for all off-site analytical work.

The intended data quality objectives for precision, accuracy and completeness for laboratory data are summarized in Tables 3-1 through 3-4.

1.5 SAMPLE LOCATIONS

Sample locations and rationale are fully described in Section 4.0. Locations will be reviewed by EPA Region 5 and IDEM, as applicable, prior to start of work.

1.5.1 Sample Network by Task and Matrix

Analytical constituents per task are summarized in Table 1-5. This is a summary of parameters relating to the Pilot Scale study. Sample totals are provided in Table 4-6, Section 4.0.

1.5.2 Excavation Site Maps of Sampling Locations

Sample location maps will be generated prior to mobilization at Mine Fill A. Preliminary sampling areas for Mine Fill A are provided in Figure 4-1. Depending on the nature of encountered field conditions some of these locations may be changed. Sampling locations will be finalized/approved by the Project Manager or designee, as overseen by the Navy, EPA and/or IDEM representatives.

TABLE 1-1 SUMMARY OF PREVIOUS SOIL BORING RESULTS - MINE FILL A

Sample I.D./Location	TNT (ppm)	HMX (ppm)	RDX (ppm)
MFA-1/45 feet away from northeast corner of box bin at Building 153	69	292	2,620
MFA-2/at base of berm 10 feet south of box bin	3,790	1,340	15,300
MFA-3/10 feet out from end of drain pipe	8	908	8,150
MFA-4/10 feet down ditch from MFA-3	<3.6	64	374
MFA-5/28 feet east of Building 158, in ditch	64	99	906
MFA-7/two feet southeast of static pole south of Building 158, in run-off ditch	<3.6	<5.0	<7.2
MFA-8/near base of berm, 15 feet west of corner of box bin	5.2	52	349

Notes:
1. Soil samples were collected from bores installed 20" below ground surface. Samples were analyzed for TNT, RDX and HMX. Reference for data and locations found on Figure 1-5 is *Final RCRA Facility Investigation Phase I, Environmental Monitoring Report, Solid Waste Management Units #19/00, #08/17, #12/14 and #13/14, Naval Surface Warfare Center, Crane Division, Crane, Indiana, Halliburton NUS (August 1992).*

TABLE 1-2. SUMMARY OF CHEMICALS PRESENT AT MINE FILL A	
Chemical	**Constituents/Composition**
TNT	2,4,6 Trinitrotoluene
RDX	Hexahydro-1,3,5-trinitro-1,3,5-triazine
HMX	Octahydro-1,3,5,7-tetranitro-1,3,5,7-tetrazocine
Minol	TNT/Ammonium Nitrate/Aluminum
HBX	RDX/TNT/Aluminum/Wax/Calcium Chloride
H-6	RDX (45%), TNT (30%), Aluminum (20%), D-2 Wax (5%)
Tritanol	TNT (80%), Aluminum (20%)
Composition B	RDX (60%), TNT (40%), wax (1%)
Tetrytol	Tetryl/TNT
Tetryl	Trinitrophenylmethylnitramine

Notes:
1. Reference: *Final RCRA Facility Investigation Phase I, Environmental Monitoring Report, Solid Waste Management Units #19/00, #08/17, #12/14 and #13/14, Naval Surface Warfare Center, Crane Division, Crane, Indiana, Halliburton NUS (August 1992)*

TABLE 1-3 DATA COLLECTION ACTIVITIES - PILOT SCALE			
TASK	**DATA COLLECTED**	**DATA USE**	**DATA QUALITY LEVEL**
1. Initial Excavation Site Characterization (NOTE: One sample will be collected per location for VOCs, covering both lists)	-site-specific VOCs (methylene chloride, acetone, methyl ethyl ketone, methyl isobutyl ketone, toluene and xylene) -total VOCs (TCLP list) -explosives (Method 8330 list) -metals (barium, cadmium, chromium, lead) -TCLP metals (regulated list only)	-identify areas for Pilot Scale excavation -determine "startup" levels of explosives to be treated -determine if site-specific chemicals are present in soil to be treated -determine if soil is hazardous with respect to metals and specific VOCs	-NEESA Level C QA/QC
2. Equipment Wash Water/ Decontamination Water Sampling	-explosives (Method 8330 list) -POTW requirements, -**RCRA metals**	-results used for discharge to on-site treatment system -determine levels of explosives entering treatment system -**metals for informational (loading) purposes**	-NEESA Level C QA/QC
3. Storm Water Retention Pond Sampling	-NPDES parameters (see Table 4-8)	-determine if NPDES criteria are met for discharge to a permitted outfall	-NEESA Level C QA/QC

TABLE 1-3 DATA COLLECTION ACTIVITIES - PILOT SCALE			
TASK	**DATA COLLECTED**	**DATA USE**	**DATA QUALITY LEVEL**
4. Process Sampling (plus Confirmation Sampling - Day ~~28~~ **60)** - Compost Piles, amendments (TOC and TKN only)	-TOC, TKN -explosives (Method 8330 list) -metals (barium, cadmium, chromium, lead) -TCLP - metals (regulated list only) -pH -% moisture -oxygen	-measure the effectiveness and progress of the compost cycle (TOC, TKN, explosives, pH, %moisture, oxygen will be tested at day ~~0, 7, 14, 21, 28~~; **0, 5, 10, 20, 30, 40, and 60** metals will be tested at day 0 and ~~28~~ **60)** -measure the starting levels of nitrogen, carbon in amendment materials (to determine initial ratios) -determine if process goals have been met with respect to explosives -preliminary determination if treated compost can be placed in on-site landfill or used as backfill in the Mine Fill A excavations (lab results will be compared to preliminary remedial goals during the Pilot Scale)	-NEESA Level C QA/QC

TABLE 1-3 DATA COLLECTION ACTIVITIES - PILOT SCALE			
TASK	**DATA COLLECTED**	**DATA USE**	**DATA QUALITY LEVEL**
5. Post-Excavation Sampling- (confirmation sampling will be deferred to Full Scale Operations)	-site-specific VOCs (methylene chloride, acetone, methyl ethyl ketone, methyl isobutyl ketone, toluene and xylene) -explosives (Method 8330 list) -metals (barium, cadmium, chromium, lead)	-determine the levels of explosives, metals, and site-specific VOCs remaining in soil after Pilot Scale excavation is complete and prior to backfilling. **The purpose of post-excavation sampling is only informational. Until full scale operations begin, the excavation will be temporarily backfilled. The data will be used during Full Scale Operations to dictate or plan further excavation at Mine Fill A. Confirmation sampling for the purpose of "closing" an excavation will be completed during Full Scale Operations.**	-NEESA Level C QA/QC

Notes:
1. Methods or parameters listed under "data collected" are off-site analytical methods, unless otherwise noted.

TABLE 1-4. INITIAL REMEDIAL GOALS AND ACCEPTABLE REPORTING LIMITS - Pilot Scale Study				
Parameter	**Method of Analysis**	**Soil goal-industrial limit (mg/kg) or TCLP regulatory limit**	**Soil Reporting Limit (mg/kg)**	**Water Reporting Limit (ug/L) (for Blank analyses)**
Explosives				
TNT	8330	30f	0.25	6.4
RDX	8330	30f	1	14.0
HMX	8330	34,000a	2.2	13.0

TABLE 1-4. INITIAL REMEDIAL GOALS AND ACCEPTABLE REPORTING LIMITS - Pilot Scale Study

Parameter	Method of Analysis	Soil goal-industrial limit (mg/kg) or TCLP regulatory limit	Soil Reporting Limit (mg/kg)	Water Reporting Limit (ug/L) (for Blank analyses)
Tetryl	8330	6,800a	0.65	10.0
TNB	8330	34b	0.25	7.3
1,3-DNB	8330	68 a, f	0.25	4.0
Nitrobenzene (NB)	8330	94a	0.26	7.0
4-Am-DNT	8330	2.8c	0.25	20 ~~0.06 (low level)~~
2-Am-DNT	8330	2.8c	0.25	14 ~~0.03 (low level)~~
2,4-DNT	8330	2.8c	0.25	5.7
2,6-DNT	8330	2.8c	0.26	9.4
2-nitrotoluene	8330	6,800d	0.25	12.0
3-nitrotoluene	8330	6,800d	0.25	7.9
4-nitrotoluene	8330	6,800d	0.25	8.0
Total Metals (site-specific)				
Barium	6010	100,000a	0.5	5
Cadmium	6010	850a	0.4	4
Chromium (total)	6010	450a	0.5	5
Lead	6010	1,000a	4 (0.3 - trace ICP)	40
TCLP-metals (regulatory limit units: mg/L)				

TABLE 1-4. INITIAL REMEDIAL GOALS AND ACCEPTABLE REPORTING LIMITS - Pilot Scale Study

Parameter	Method of Analysis	Soil goal-industrial limit (mg/kg) or TCLP regulatory limit	Soil Reporting Limit (mg/kg)	Water Reporting Limit (ug/L) (for Blank analyses)
Arsenic	1311, 6010	5.0 mg/L	N/A	100 ug/L
Barium	1311, 6010	100	N/A	5
Cadmium	1311, 6010	1.0	N/A	4
Chromium	1311, 6010	5.0	N/A	5
Lead	1311, 6010	5.0	N/A	40
Mercury	1311, 7470	0.2	N/A	1.5
Selenium	1311, 6010	1.0	N/A	100
Silver	1311, 6010	5.0	N/A	5
Volatile Organics (the following compounds were listed in Table 5-7 of the August 1992 EMR for Mine Fill A)				
Dichloro-methane (methylene chloride)	8240	18a	0.005	5
Acetone	8240	8,800a	0.01	10
Methyl ethyl ketone	8240	27,000a	0.01	10

TABLE 1-4. INITIAL REMEDIAL GOALS AND ACCEPTABLE REPORTING LIMITS - Pilot Scale Study

Parameter	Method of Analysis	Soil goal-industrial limit (mg/kg) or TCLP regulatory limit	Soil Reporting Limit (mg/kg)	Water Reporting Limit (ug/L) (for Blank analyses)
Methyl isobutyl ketone	8240	2,800a	0.01	10
Toluene	8240	880a	0.005	5
Xylene (total)	8240	320a	0.005	5
Total VOCs (TCLP regulated list)				
Benzene	8240	1.4a	0.005 mg/kg	5 ug/L
Carbon Tetrachloride	8240	0.5a	0.005	5
Chlorobenzene	8240	220a	0.005	5
Chloroform	8240	0.53a	0.005	5
1,2-Dichloroethane	8240	0.55a	0.005	5
1,1-Dichloroethene	8240	0.08a	0.005	5
Methyl Ethyl Ketone	8240	27,000a	0.01	10
Tetrachloro-ethylene	8240	170a	0.005	5
Tetrachloro-ethene	8240	7a	0.005	5
Vinyl Chloride	8240	0.035a	0.01	10

TABLE 1-4. INITIAL REMEDIAL GOALS AND ACCEPTABLE REPORTING LIMITS - Pilot Scale Study

Parameter	Method of Analysis	Soil goal-industrial limit (mg/kg) or TCLP regulatory limit	Soil Reporting Limit (mg/kg)	Water Reporting Limit (ug/L) (for Blank analyses)

Notes:

1. Analytical methods listed above are SW-846 methods, unless otherwise indicated.
2. All other parameters not listed here will be reported at standard PQLs (i.e. TOC, TKN)
3. Parameter lists required to be reported per method per data collection task are provided in Table 1-5.
4. N/V = no value available
5. N/A = not applicable

a. Reference: EPA Region 9 Preliminary Remediation Goals, August 1, 1996 **(Note that if high levels of total chromium are detected, hexavalent chromium samples may be collected. Analysis will not be permitted until after U.S. EPA's approval of an SOP for hexavalent chromium analysis.)**

b. Value for 1,3,5-Trinitrobenzene

c. Value for dinitrotoluene mixture (see reference a).

d. Value for 2-and 3-nitrotoluene.

e. These reporting limits will be confirmed with the laboratory.

f. Target parameter presumes collection of 3 isomers and applies most conservative available industrial PRG value to non resolved isomers.

TABLE 1-5 SUMMARY OF SAMPLING PARAMETERS PER TASK

Task	Analytical Method Requested	Parameters to be Reported
1. Initial excavation site Characterization -identify areas for Pilot Scale excavation -determine "startup" levels of explosives -determine if additional site-specific (potential) contaminants are present -determine if soil is hazardous with respect to metals and VOCs	-Site-specific VOCs (Method 8240) -total VOCs (TCLP regulated list using Method 8240) (NOTE: one sample will be collected for VOCs analysis, covering both lists) -Explosives (Method 8330) -Site-specific metals (6010) -TCLP-metals (1311, 6010, 7470)	-8240: methylene chloride, acetone, xylene, toluene, methyl ethyl ketone, methyl isobutyl ketone -benzene, carbon tetrachloride, chloroform, chlorobenzene, 1,2-dichloroethane, 1,1-dichloroethene, methyl ethyl ketone, tetrachloroethene, trichloroethene, vinyl chloride -full list for explosives -6010: barium, cadmium, total chromium, lead -regulated list only
2. Equipment Wash Water/ Decontamination Water Sampling	-explosives (Method 8330) -POTW requirements -**RCRA metals**	-full Method 8330 list -dependent on POTW -**Methods 6010 and 7420**
3. Storm Water Retention Pond Sampling	-TSS (EPA 160.2) -COD (EPA 410.4) -BOD (EPA 405.1) -Oil and Grease (EPA 413.1) -Nitrate (EPA 300.0) -Ammonia-N (EPA 350.2)	list as shown
4. Process Sampling and Confirmation Sampling (Day ~~28~~ **60**); amendments will be sampled once for TOC and TKN only	-Explosives (Method 8330) -TOC (EPA 9060) -TKN (EPA 351.3) -metals (6010) - day 0 and ~~28~~ **60** only -TCLP-metals(1311, 6010, 7470) - day 0 and ~~28~~ **60** only	-full list for explosives -TOC, TKN -7470/7471: mercury -6010: barium, cadmium, total chromium, lead -regulated list only (see Pilot Scale Operational Plan for additional field parameters)

TABLE 1-5 SUMMARY OF SAMPLING PARAMETERS PER TASK		
Task	**Analytical Method Requested**	**Parameters to be Reported**
5. Sampling- Excavations	-Site-specific VOCs -Explosives (Method 8330) -Site-specific metals (6010)	-8240: methylene chloride, acetone, xylene, toluene, methyl ethyl ketone, methyl isobutyl ketone -full list for explosives -6010: barium, cadmium, total chromium, lead

Notes:
1. If soil requires off-site treatment, samples will be collected during Full Scale Operations.

SECTION 4
SAMPLING PROCEDURES

Sampling procedures will be used to collect data to meet the objectives of five data collection tasks:

- Initial Excavation Site Characterization (Section 4.1)
- Equipment Wash Water/Decontamination Water Sampling (Section 4.2)
- Storm Water Retention Pond Sampling (Section 4.3)
- Process Sampling (Section 4.4)
- Excavation Sampling (Section 4.5)

These tasks and associated objectives are described in Section 1.4.

QA/QC samples are described in Section 4.6. Decontamination procedures are provided in Section 4.7. Sample packaging and shipping information is provided in Section 4.8. A field equipment list and field test kit data sheets are provided in Appendix A.

Each of the sampling tasks listed above will be completed during the Pilot Scale, as applicable. Mine Fill A soils will be excavated and treated. It is anticipated that ~~only~~ ***as much as*** 200 cubic yards will be excavated from the site for treatment. Additional excavation at Mine Fill A will be completed during Full Scale Operations.

Confirmation sampling in the excavation(s) for the purpose of closure will not be completed during the Pilot Scale phase. The ~~200 cubic yard~~ excavation will be sampled for explosives, site-specific VOCs and metals (barium, cadmium, total chromium, and lead) prior to being temporarily backfilled. This data will assist in delineating further excavation at Mine Fill A.

4.1 INITIAL EXCAVATION SITE CHARACTERIZATION PROCEDURES

As defined in Section 1.4, this task has three specific objectives:

Objective 1: Identify areas for Pilot Scale excavation. Analyze the soil, primarily in the vicinity of Building 153 or Building 158 (backup in case Building 153 cannot be used during the Pilot Scale) for explosives. Additional excavation at Mine Fill A will be completed during Full Scale Operations. This data will also be used as "entry " or "startup" concentrations for composting.

Objective 2: Determine if site-specific waste products are present. Site specific VOCs include methylene chloride, acetone, methyl ethyl ketone, methyl isobutyl ketone, toluene and xylene. These constituents will serve as indicators of the presence of paint wastes. Depending on VOC results, additional testing for naphtha, methanol, isopropanol and ethanol may be required. Site specific metals include barium, cadmium, chromium and lead.

Objective 3: Determine if soil is hazardous with respect to metals and TCLP list VOCs. Soil will not be accepted into the Biofacility for treatment if it is hazardous with respect to these constituents.

These three objectives will be met by collecting soil samples in a general area where high levels of explosives have been previously detected (Figure 1-5). Associated soil sample data, collected in 1985, are summarized in Table 1-1. Soil samples will be collected and analyzed for explosives; site-specific VOCs and metals; TCLP-metals; and TCLP list VOCs. This data will assist in identifying areas for Pilot Scale excavation. This data will not be used to define the extent of contamination.

Note that in this section and in Table 4-1, "VOCs analysis" indicates the soil will be tested for site-specific VOCs and TCLP list VOCs. Only one sample will be collected for analysis of both sets of VOCs.

Sampling Areas

Four sampling areas have been designated north and northeast of Building 153 (Figure 4-1). These areas encompass an earthen berm around Building 153 which is potentially contaminated with explosives, based on previous sampling results (Table 1-1). Additional sampling areas, north and east of the turn-around road will be gridded using a 20-foot spacing.

Grid layout and boundaries will be affected by the presence of buildings, utilities, etc. Grid borders, including those of sampling areas 1-4, will be flagged in the field and areas will be chosen which will be accessible by heavy equipment (i.e. individual grid blocks will not be placed in the midst of heavy utilities or surface structures). Grid blocks are not expected to be perfectly square (i.e. those in the berm), but should roughly represent a 20-foot by 20-foot area. Assuming two feet of soil will be excavated, each 20-foot by 20-foot area or "grid block" will represent approximately 30 cubic yards of soil.

Soil Sampling

Soil samples will be collected from each grid block or sampling area using the procedure provided in Table 4-1, which is highlighted as follows:

For each grid block:

Volatile Organics Sampling

-At a minimum, one sample for VOCs analysis will be collected from the center of the grid block using a drive sampler fitted with two brass sleeves (one sleeve for VOCs, the second sleeve for metals/explosives grab sample). **A drive sampler, fitted with a brass sleeve, will be used to collect VOCs samples. Once the sleeve is removed from the sampler, each end will be covered with teflon film, capped and taped. These steps should minimize loss of VOCs.**

-The soil will be examined, at each grab sample location, to determine if unusual odors, stains or other indicators are present (i.e. high PID readings) of organic contamination. Based on these field observations, additional VOC samples may be collected.

-VOCs samples will be collected from the 12- to 18-inch depth only, unless otherwise indicated by field observation.

-Grab samples for metals/explosives will be held separately.

Metals/Explosives Sampling

-Four additional grab samples will be collected from each corner of the grid block, as shown in Figure 4-2, for the 6- to 12-inch depth and 2- to 3-foot depth, using a drive sampler fitted with brass sleeves.

-For each depth:

-The four grab samples plus the one from the center of the grid block will be composited for explosives and metals analyses. The grabs will be combined to form one composite sample as follows:

Place each grab sample into an aluminum pie pan or cookie sheet, after removing vegetation and coarse fractions. Break up the soil using gloved hands, and remove large rocks (the soil may also be sieved). Allow the soil to air dry. Cover the pie pan with a second pie pan and shake and swirl vigorously to disperse and homogenize the soil. Cone and quarter the soil in the pie pan. Collect an equal portion from each quarter and composite to fill an 8-ounce jar for explosives analysis.

This process will provide a more representative sample as explosives contamination is known to vary over short distances (Crockett and others, 1996).

-Combine the remaining soil together for metals analysis (barium, total chromium, lead and cadmium) and TCLP-metals analysis. One 8-ounce jar will be required for each analysis.

As a result, for each grid block, a minimum of two composite samples will be collected for metals (barium, total chromium, lead, cadmium), TCLP-metals and explosives. A minimum of one sample will be collected for VOC analysis from the center of the grid block, from a depth of 12 to 18 inches.

Marking Grid Blocks for Excavation

Explosives data will be used to mark grid blocks or sampling areas as requiring excavation. If a grid block or sampling area shows contamination (> 30 mg/kg TNT or RDX) to a depth of two feet, the grid block or area will be marked for two feet of excavation. If a grid block or area shows contamination at the six-inch depth only, the block or area will be marked for one foot of excavation. If a grid block shows no contamination at six inches nor at the two-foot depth, additional grid blocks will be sampled. Sampling will continue until enough soil is "marked" for excavation (***as much as*** 200 cubic yards ~~*minimum*~~ for Pilot Scale).

4.2 EQUIPMENT WASH WATER/DECONTAMINATION WATER SAMPLING

Decontamination water generated at the staging area at Mine Fill A and at the Biofacility will be collected and stored in a tank. This water will be used in the process only in the startup phase. Once the treatment process is underway, only potable water will be added to enhance moisture content in the compost piles. Any solids which collect in the sumps at the Biofacility will also be added to the compost during the initial phase only.

Decontamination water stored in a tank will be sampled for explosives if used in the treatment process, or will be sampled for explosives, **RCRA metals** and POTW requirements if shipped to an on-site treatment facility. Sampling procedures are provided in Table 4-2.

The samples will be labeled and stored in a cooler with ice and kept at approximately 4 degrees Celsius. Sample documentation, packaging, and shipping procedures will be followed as described in Section 4.8 and Section 5.0, Custody Procedures.

Disposable bailers or disposable pump tubing will be used to sample tanks, eliminating the need for decontamination. Used disposable bailers will be disposed with used PPE.

4.3 STORM WATER RETENTION POND SAMPLING

Surface runoff or storm water present on the Biofacility asphalt-paved areas will be diverted to two ponds, #1 and #2. The water in the retention ponds will be sampled to determine if NPDES discharge requirements are met. Sampling procedures are provided in Table 4-3. Samples will be tested for NPDES parameters listed in Table 4-8.

The samples will be labeled and stored in a cooler with ice and kept at approximately 4 degrees Celsius. Sample documentation, packaging, and shipping procedures will be followed as described in Section 4.8 and Section 5.0, Custody Procedures. Disposable bailers or disposable pump tubing will be used to sample the retention pond water, eliminating the need for decontamination. Any used disposable bailers will be disposed with used PPE.

A NSWC Crane representative may perform the storm/run-off water sampling in lieu of the above, based on the approved IDEM NPDES requirements.

4.4 PROCESS SAMPLING

Amendment~~s~~ ***blends*** will be sampled prior to addition of soil excavated from Mine Fill A, and analyzed for TOC and TKN to determine initial levels of organic carbon and nitrogen. ***Amendment blend samples will be collected from sample locations 1, 2, and 3 at each cross-section. The samples at each will be composited for a total of 4 samples per pile.***

During the Pilot Scale, approximately eight compost piles, consisting of a mixture of soil and amendments, will be tested. This process is anticipated to take a minimum of ~~28 days~~ **30 days for clean soil and 60 days for contaminated soil after that**, as dictated in the Pilot Scale Operational Plan. Each pile will be 25-30 feet long, 7 feet high and 20 feet wide. Sampling locations are displayed in Figure 4-3. Cross-section A, B, C and D will be sampled throughout the process for various parameters to be analyzed by an off-site laboratory. The schedule for sampling is as follows:

Windrow/Compost Sampling Schedule (off-site analyses) - Pilot Scale				
Parameter	**Analytical Method**	**Number of Samples per Sampling Event**	**Volume Required per sample**	**Schedule**
~~*Explosives (full list)*~~	~~*8330*~~	~~*3 per cross-section (12 total)*~~	~~*8 ounces*~~	~~*Day 0, 7, 14, 21 and 28 0, 5, 10, 20, 30, 40, and 60*~~
TCLP-metals	1311, 6010, 7470	3 per cross-section (12 total)	8 ounces ***(Both analysis may be done using 8 ounces)***	Day 0 and ~~28~~ **60**
Metals (barium, cadmium, total chromium, lead)	6010	3 per cross-section (12 total)	~~*8 ounces*~~	Day 0 and ~~28~~ **60**
TOC	9060	3 per cross-section (12 total)	8 ounces (~~*both*~~ ***All 3*** analyses may be done using 8 ounces of soil)	Day ~~0, 7, 14, 21 and 28~~ **0, 5, 10, 20, 30, 40, and 60**
TKN	EPA 351.3	3 per cross-section (12 total)		Day ~~0, 7, 14, 21 and 28~~ **0, 5, 10, 20, 30, 40, and 60**
Explosives (full list)	***8330***	***3 per cross-section (12 total)***		

<u>Note: Make sure the lab does not lose the sample and uses the best preservation and internal tracking methods.</u>

Once process samples have shown that explosive concentrations have been consistently reduced over time for one or more compost piles or mixtures, a confirmation sample will be collected. Confirmation samples are anticipated to be collected on Day ~~28~~ **<u>60</u>** of processing. However, should processing be extended, confirmation samples will be completed at the end of the time extension. Confirmation samples will be collected using procedures in Table 4-4.

Treated compost which does not meet the process goals for TNT and RDX using all mixtures may also require off-site disposal, especially if it cannot be placed in the on-site landfill. Soil and/or treated compost which requires off-site disposal will be stockpiled and sampled at a frequency to be determined by the Project Manager and the Navy. This task will be implemented during Full Scale Operations.

4.4.1 Other Process Parameters

Field testing equipment will consist of ~~pH~~, oxygen and temperature direct reading probes. Oxygen and temperature will be measured by pushing the individual probes into the center of each sampling sector of the compost piles and allowing enough time for an accurate reading, per manufacturer recommendation. Compost pH will be determined by measuring the pH level in a solution of deionized water and a compost sample as described in Section ~~7.2~~ 8 of the Pilot Scale Operational Plan. Soil moisture will be measured by weighing the sample, drying it, reweighing it and calculating the percent moisture. Frequency of pH, oxygen, temperature and soil moisture measurements are described in Section 8 of the Pilot Scale Operational Plan.

4.4.2 Air Monitoring

Air monitoring will be performed as described in Section 15.0 of the Pilot Scale Operational Plan.

~~*The concentration of methane gas, a decomposition by-product, will be measured in the air above the compost piles using a Dynamation Gas Detection Instrument, Model Combo 435. All measurements will be recorded in the field log book. Further information on methane monitoring may be found in Section 11 of the Operational Plan and the SSHP.*~~

4.5 EXCAVATION SAMPLING PROCEDURE

Approximately 200 cubic yards will be required for Pilot Scale operations. Once the excavation is completed, the hole will be temporarily backfilled using soil from an approved source at Crane. Prior to backfilling, the excavation will be sampled to determine levels of explosives, site-specific VOCs and site-specific metals, if any, present above initial remedial goals. This data will be collected to guide further excavation at Mine Fill A during Full Scale Operations.

The base and walls of the excavation will be gridded using 20-foot spacings. Samples will be collected from approximately six inches below ground surface, using procedures in Table 4-1. Samples will be analyzed for explosives, site-specific VOCs and site-specific metals only.

4.6 QA/QC SAMPLES

QC samples will be collected to ensure that representative and reproducible data are obtained. The types of QC samples that will be used are discussed below. QC samples apply only to samples submitted for off-site analysis by a laboratory.

4.6.1. Trip Blanks

A trip blank is a QC sample that consists of two vials filled with organic-free water and is prepared in the laboratory, shipped to the sampling site with the sample containers, and returned to the laboratory with the samples to be analyzed for VOCs. One trip blank will accompany each cooler containing VOC samples and will be stored at the laboratory with the samples and analyzed by the laboratory. Trip blanks will be analyzed for VOCs only.

4.6.2 Equipment Rinsate Blanks

Equipment rinsate blanks (or rinsate blanks) are collected to ensure that sampling equipment is clean and that the potential for cross-contamination has been minimized or prevented. Rinsate blanks are collected from the final reagent grade water rinse used in sample equipment decontamination. Rinsate blanks will be collected ~~early in the day on a daily basis~~ and analyzed at a frequency of one **per 10** samples collected, or at a frequency listed with the sampling procedures, whichever is more stringent. A reduction in the frequency of rinsate blanks may be deemed justifiable by the Project Chemist based on review of analytical results which would need to show no discernable evidence of introduction of cross-contamination due to inadequate equipment cleansing.

The rinsate blank is obtained by first decontaminating the sampling device and then pouring reagent grade water over the device. This water is provided by an analytical laboratory at NSWC Crane. The rinsate blank water is collected directly into the sample bottles. The rinsate blanks are analyzed for the same constituents as the related samples. The results will be used to flag or assess the levels of analyses in the samples and evaluate the effectiveness of sampling equipment decontamination.

4.6.3 Field Blanks

Two types of field blanks will be collected during the Pilot Scale operations. The first type (A) is defined as follows:

> "Field blanks consist of the source water used in decontamination and steam cleaning. At a minimum, one field blank from each event and each source of

> water must be collected and analyzed for the same parameters as the regular samples." (NEESA, 1988)

As a result, samples of decontamination water used, including the potable water used during treatment, will be collected at a frequency of 1 per source per event, as shown in Table 4-6.

The second type of field blank (B) to be collected is defined as follows:

> "(A field blank is) is used to determine if any contaminants present at the site may have an effect on sample integrity. (The blank is) prepared by pouring distilled/deionized water into sampling containers at certain sampling locations (typically areas where dust and/or volatile organic contamination may emanate from other sources)." (Hazardous Waste Consultant, 1992)

Field Blank B will be collected at a frequency of 1 per 20 regular samples. Frequency of collection and analysis of these blanks (type A and type B) will be finalized by the Project Chemist.

4.6.4 Field Duplicate Samples

Field duplicate samples will be collected to allow determination of analytical and sampling precision. One duplicate sample per ten samples will be collected and submitted for the same analysis as the regular samples. The duplicate sample will be collected simultaneously with the true sample. The sample will be collected with the same sampling equipment at the same location as the regular sample, but it will be labeled with the next consecutive sample number.

4.6.5 Matrix Spike Samples

Matrix spike/matrix spike duplicates (MS/MSD) samples will be used as further QC checks. These samples will be spiked at the laboratory. The samples will be collected and prepared at the frequency of one MS and MSD for every 20 field samples (including trip blanks, field blanks, and duplicates). The samples will allow accuracy to be determined by the recovery rates of compounds (the matrix spike and/or surrogate spike compounds defined in the analytical methods). Precision will also be assessed by comparison of matrix spike duplicate recoveries. The purpose of these laboratory spikes is to monitor any possible matrix effects specific to samples collected from the site. The addition of known concentrations of compounds/ constituents to the sample also monitors extraction/digestion efficiency.

MS/MSD samples will be collected to provide sufficient volume per QC and analytical laboratory requirements. The laboratory will select aliquots that are as homogeneous as possible with respect to one another to avoid precision problems related to sample homogeneity.

4.7 DECONTAMINATION PROCEDURES

4.7.1 Sample Bottles

Sample bottles will be provided by the analytical laboratory. These bottles will arrive at the site in sealed boxes or coolers. Certification of cleanliness will accompany each box of bottles. The exception to this would be if any bottles were pre-preserved by the lab.

If certification is not included or cleanliness of the containers is suspect, USEPA approved cleaning procedures will be carefully conducted by the analytical laboratory. The procedures are as follows:

Metals: Detergent wash, tap water rinse, 1:1 HNO_3 rinse, tap water rinse, 1:1 HCL rinse, final reagent grade water rinse.

Volatiles (40 ml glass vials and septa): Non-phosphate detergent wash, tap water rinse, reagent grade water wash, dry (glassware only) in a muffle furnace at 105 degrees Celsius for one hour.

Explosives: Non-phosphate detergent wash, tap water rinse, deionized water rinse, methanol rinse, final reagent grade water rinse.

4.7.2 Sample Equipment Decontamination

Decontamination of construction and field equipment will take place in a designated area using procedures described in Section ~~6.2~~ ***7.0*** of the Pilot Scale Operational Plan. All non-disposable sampling equipment, including stainless steel trowels and spoons, will be decontaminated according to the following procedure and sequence, depending on the contaminants involved:

1) Manual scrub with Alconox and tap water wash.

2) Rinse with potable water.
3) 10% nitric acid rinse (for metals only).
4) Rinse with reagent grade water.
~~5) Reagent grade water rinse.~~
~~6)~~ **5)** Air dry.

Once dry, sampling equipment will be stored in plastic bags to prevent contamination.

Decontamination water from equipment and vehicle decontamination activities will be stored in a dedicated tank. Decontamination water and water collected in sumps will either be recycled as compost process water or transported to a wastewater treatment facility (WWTF) at Rockeye or Mine Fill A. Water shipped to the WWTF will be sampled and analyzed per waste water treatment facility permit requirements.

4.8 SAMPLE PACKAGING AND SHIPPING

Immediately after collection, samples will be properly labeled, tagged and properly preserved. Table 4-7 lists the proper container, volume requirements, and preservation needed for the sampling effort. Samples requiring refrigeration for preservation will be immediately placed in coolers packed with ice or ice packs. Proper chain-of-custody documentation will be maintained as discussed in Section 5.0 - Custody Procedures.

Packaging and shipping procedures will vary depending upon sample media, potential contaminant concentration, preservation technique, and sample container. General procedures are provided in Table 4-5. A waterproof metal or equivalent strength ice chest or cooler is suitable for packaging and shipping samples not considered "Dangerous Goods" by the U.S. Department of Transportation (USDOT). The person packaging the samples is responsible for ensuring that the cooler is in suitable condition for shipping. In the event a concern arises regarding whether a sample shipment is a USDOT "Dangerous Good" or is potentially in violation of international transportation regulations, the Project Engineer or Project Manager will be consulted.

Sample packaging should ensure that the chance of breakage is minimized and that, in the event a sample container breaks or leaks, it will not impact the integrity of other samples in the shipment. Also, samples should be protected from ice melt. Each sample container should be placed in a Ziploc™-type bag, and wrapped in packing material such as bubble wrap or comparable shock-absorbing materials when shipping glass containers to avoid breakage. Adequate ice, contained in double Ziploc™-type bags, must be included with each cooler shipment so that the contents are maintained at 4 (± 2) degrees Celsius until receipt at the laboratory. If necessary, a temperature

blank will be shipped with each cooler.

In addition to an adhesive label, sample tags will be tied around the jars, as possible. The tags will include the same information recorded on the label.

A chain-of-custody record, protected from moisture by enclosure in a Ziploc™-type bag, must accompany each cooler shipped. The cooler lid should be secured using packing tape around the outside of the cooler. Custody seals will be signed, dated and affixed to the front, side and back of the cooler. The seals should be placed in such a way that tampering with the cooler lid will result in a ripped seal.

TABLE 4-1. SOIL SAMPLE COLLECTION (TASK 1 AND TASK 5)
Objectives: Task 1: -Identify areas for Pilot Scale excavation. -Measure "entry " or "startup" concentrations of explosives in soil to be treated. -Determine if soil is hazardous with respect to metals and VOCs. Task 5: -Determine levels of explosives and metals still remaining following Pilot Scale excavation
Equipment: -small stainless steel trowel, stainless steel hand shovel, stainless steel spoons -large shovel -flagging and pins -measuring tape -sample containers -aluminum pie pans -PID -drive sampler -brass sleeves and endcaps -teflon film -plastic sheets -stainless steel bowls

TABLE 4-1.
SOIL SAMPLE COLLECTION (TASK 1 AND TASK 5)

Methods:

Placing the Sampling Grid

Task 1: Initial Excavation Site Characterization

1. Layout a grid using 20-foot spacings west of the steam line and north of the conveyor, in the vicinity of Building 153. Each 20 x 20-foot grid block may or may not be square, due to the presence of utilities, buildings or roads (see example Figure 4-2).
2. Label these blocks or sampling areas, beginning with "1," as shown in Figure 4-1. Note that sampling areas 1-4 have already been designated.

Task 5: *Post-Excavation Sampling*

1. Layout a grid using 20-foot spacings along the base of the excavation(s). Place pin flags at each node.
2. For the sidewalls, place pin flags every 20 feet, along each wall. Place the flags midway between ground surface and the excavation base. If a sidewall is less than one foot in height, do not place flags and do not collect samples from the wall.

TABLE 4-1.
SOIL SAMPLE COLLECTION (TASK 1 AND TASK 5)

Method (continued):

Sample Collection - 20-foot x 20-foot Grid Blocks (Task 1)

NOTE: 2-inch diameter, 6-inch long sleeves will be used in the drive sampler.

1. Follow these steps when sampling each grid block or sampling area:
   a. Place flags near each corner and at the center (see Figure 4-2 for an example).
   b. At the center of the grid block:
      -Clear surface vegetation and debris in a 6-inch by 6-inch area.
      -Using a stainless steel trowel and spoon, remove the upper 6 inches of soil.
      -Using a drive sampler fitted with two brass sleeves, collect soil from the 6-inch depth to 12-inch depth; and from the 12-inch depth to the 18-inch depth.
      -Label the sleeve from the 12-18 inch depth as the volatile organics sample. Cover both ends of the sleeve with teflon film and cap. Store the sleeve in a cooler with bagged ice.
      -Take the other sleeve and push the contents into a stainless steel bowl labeled "metals/explosives grabs - 6-12 inches."
      -Remove soil from the boring down to 2 feet.
      -Using a drive sampler fitted with two sleeves, collect soil from the 2-foot to 3-foot range. Push the contents of shallow sleeve (2-2.5 feet) into a second stainless steel bowl labeled "metals/explosives grabs - 2-3 feet," break up the soil, and cover with a plastic sheet. Wait a few minutes, lift the plastic, and screen the headspace of the bowl using a PID.
         -If readings are above background levels, cover both ends of the deeper sleeve (2.5-3 feet) with teflon film and cap. Submit the capped sleeve for VOCs analysis, as authorized by the MK Project Manager.
         -If PID readings are not > background, place the contents of the deeper sleeve into the bowl.
   c. At each of the four corners:
      -Clear surface vegetation and debris in a 6-inch by 6-inch area.
      -Using a stainless steel trowel and spoon, remove the upper 6 inches of soil.
      -Using a drive sampler fitted with two brass sleeves, collect soil from the 6-inch depth to 12-inch depth; and from the 12-inch depth to the 18-inch depth.
      -Push the contents of the 6-12 inch sleeve into the designated bowl. PID screen and evaluate the contents of this sleeve to determine if the second sleeve (12 to 18 inch depth) should be submitted for VOCs analysis.
      -Remove soil from the boring down to 2 feet.
      -Using a drive sampler fitted with two sleeves, collect soil from the 2-foot to 3-foot range. Push the contents of both sleeves into the stainless steel bowl labeled "metals/explosives grabs - 2-3 feet."
   d. At a minimum, one bowl of soil will result from the 6-12 inch depth and one bowl of soil will result from the 2-3 foot depth. A minimum of one sample, collected from the center of the grid block, will be tested for VOCs.

TABLE 4-1.
SOIL SAMPLE COLLECTION (TASK 1 AND TASK 5)

Method (continued):

NOTE: Note PID measurements in the field logbook. If unusual odors and stains are discovered and/or PID measurements are above background levels, collect a sample for VOCs analysis. Analysis of additional VOCs samples will be approved by the Project Manager or Project Chemist.

e. Use the following steps for forming a composite sample for each depth:
-Place each grab sample into a large aluminum pan, after removing vegetation.
-Break up the soil using gloved hands, remove large rocks (the soil may also be sieved), and allow soil to air dry.
-Cover the pie pan with a second pie pan and shake and swirl vigorously to disperse and homogenize the soil.
-Cone and quarter the soil in the pie pan.
-Collect equal portions from each quarter to fill one 8-ounce jar for explosives analysis.
-Fill the remaining jars (2 8-ounce jars) with soil for metals analysis. One jar will be labeled for TCLP-metals (Task 1 only). The second jar will be labeled for total metals (Ba, Cd, Cr, Pb only) (Task 1 and 5).

2. Record general sampling information including a description of the sampling location (including a sketch), sample I.D.s, date, time and observations (i.e. presence of stains, grain size, color, percent moisture)

3. If soil samples cannot be collected due to high clay content or high % of cobbles or gravel, move the affected soil boring to an adjacent location.

Sample Collection - 20 x 20-foot Grid Blocks (Task 5)

Follow the same procedure as for Task 1, however do not collect sleeves or samples from the 2-3 foot depth. Samples will only be analyzed for site-specific VOCs, site-specific metals and explosives (full Method 8330 list).

Sample Collection - Sidewalls (Task 5 only)

Collect a sample from each flagged location along each sidewall using the procedure from Step 1b. Submit one sleeve for site-specific VOCs analysis from 12-18 inches below ground surface. Submit one sleeve from 6-12 inches for explosives and metals (barium, cadmium, total chromium and lead).

TABLE 4-1.
SOIL SAMPLE COLLECTION (TASK 1 AND TASK 5)

QA/QC:

One field duplicate will be collected for every 10 regular samples collected. Field duplicate locations will be marked in the field using different colored flags. Additional volume for the field duplicate (and MS/MSD) will be drawn from the composite mixture for metals and explosives. For the VOCs field duplicate, a sleeve of soil will be collected from the 18-24 inch depth, at the center of the grid block. For Task 1, the duplicate will be analyzed for metals (barium, cadmium, total chromium, lead), TCLP-metals, explosives, site-specific VOCs (see Table 1-4 or 4-7 for list of VOCs), and TCLP list VOCs. For Task 5, the duplicate will be analyzed for explosives, site-specific VOCs and site-specific metals ONLY.

Field equipment will be decontaminated using procedures in Section 4.7. One equipment rinsate will be collected for every 10 regular samples collected. Sampling parameters are listed in Table 4-6.

One field blank (type B) will be collected for every 20 regular samples collected to determine if any contaminants were introduced during sampling. An additional field blank (type A) will be collected of the water used in decontamination. Sampling parameters are listed in Table 4-6.

One trip blank will be submitted with the cooler containing the VOCs samples. Each trip blank will be tested for VOCs only.

TABLE 4-2.
WASTE WATER STORAGE TANK SAMPLING PROCEDURE

Objective: To collect representative samples and obtain data necessary to properly dispose of wastewater generated during site activities.

Equipment:
-stainless steel bucket or ladle
-disposable Teflon or stainless steel bailer
-slow rate pump and disposable tubing (may be used for tank sampling if tank is too large to access with a bailer)
-fishing line, cord and reel

Method:

Waste water generated during decontamination activities will be pumped into holding tanks. Following solids settling, a minimum of one water sample will be collected from each tank. It is anticipated that only explosives data are required. However, a procedure for VOCs sampling is included as a contingency.

1. If the tank is not fitted with a valve, a submersible pump will be lowered midway between the water surface and tank bottom. Care will be taken not to disturb the settled solids at the tank bottom.

2. If VOCs are required, collect volume for this analysis first. Lower the pump slowly into the water to avoid degassing. Pump the water from the tank at a low rate (200 mL/min or less).
   a. Slowly fill the volatile organic analysis (VOA) vials, taking care not to force out the preservative.
   b. Slightly overfill vial to form a meniscus.
   c. Tightly cap the vial and invert the bottle.
   d. Tap the sides of the vial to see if air bubbles are trapped in the sample.
   e. If air bubbles are present, place the vial in an upright position and open the cap. Repeat steps "a" through "d". If air bubbles are still present, discard sample and redo all steps.

   A disposable Teflon or decontaminated stainless steel bailer may be used in place of a pump and tubing. Slowly lower the bailer beneath the water surface and fill. Attach a VOA vial "bottom-emptier" device to the bottom of the bailer. NOTE; the bailer will begin to drain immediately. Be sure that the bottom fill device tube has been placed in the vial prior to attachment to the bailer. Fill the vial until full. Follow steps a through e to properly seal the vials.

TABLE 4-2.
WASTE WATER STORAGE TANK SAMPLING PROCEDURE

Method (continued):

3. Remaining sample containers may be filled using pump and tubing or directly from a bailer. Using a fresh bailer volume, fill the remaining containers to nearly full (usually to the lip of the container).

4. A sample can be obtained through a bottom valve if no other access point is available. The sample may be rather turbid due to high solids content at the bottom of the tank. Consult the Project Manager to determine if the samples will be filtered for metals in this case. Also determine if the sludge/solids at the base of the holding tank will be sampled as well.

Documentation and Shipping
Documentation procedures are provided in Section 5.0. Packaging and shipping instructions are provided in Table 4-5.

QA/QC:
It is anticipated that 1-2 samples of wastewater will be collected. At the Project Chemist's discretion, one field duplicate will be collected and analyzed for the same parameters as the regular samples.

If non-disposable equipment is used for sampling (i.e stainless steel bailer), one rinsate blank will be collected and analyzed for the same parameters as the regular samples.

One trip blank will be submitted with the cooler containing any VOCs samples. Each trip blank will be tested for VOCs only.

TABLE 4-3. STORM WATER RETENTION POND SAMPLING PROCEDURE

Objective: To determine if NPDES requirements have been met for on-site disposal.

Equipment:
-Teflon or polyethylene disposable **bottom-filling** bailers ~~or stainless steel bailers~~
-fishing line and reel
~~-slow rate pump and tubing/hose~~ **container on a rod**

Method:

During bioremediation activities, surface water, such as incidental storm runoff from the site, will be diverted to storm water retention ponds #1 and #2. This water will be sampled to determine if disposal criteria or NPDES requirements have been met (Table 4-8). The sampling procedure for the storm water retention ponds is provided below.

1. Collect a water sample using a sample collection device such as a disposable **bottom filling** bailer or ~~pump~~ **or surface water sampling device**. Fill the bottle directly from the bailer or ~~pump tubing~~ **grab sample container**. If the capacity of the bottle exceeds the capacity of the bailer, begin filling all the bottles from each bailer sample until all the bottles are filled. Lower the bailer to the same depth each time if more than one bailer volume is needed. Take care not to disturb bottom sediments in the pond(s).

2. Document the approximate location and depth the water sample was collected.

3. Clean the exterior of the sample container, and ensure that the container is tightly sealed before applying the sample label.

Documentation and Shipping
Documentation procedures are provided in Section 5.0. Packaging and shipping instructions are provided in Table 4-5.

QA/QC:

It is anticipated that several samples of pond water will be collected. At the Project Chemist's discretion, one field duplicate will be collected and analyzed for the same parameters as the regular samples.

If non-disposable equipment is used for sampling (i.e stainless steel bailer **is substituted**), one equipment rinsate will be collected and analyzed for the same parameters as the regular samples.

TABLE 4-4. COMPOST SAMPLING PROCEDURE

Objective: To support the operations at the Biofacility and monitor the effectiveness of soil remediation using composting.

Equipment:
-pH monitors
-temperature and oxygen probes
-portable oven (moisture content) and scale
~~-hand auger, sample bucket~~ **stainless steel push tube with sleeves or split spoons** and attachments ~~or~~, drive sampler, ***or hand auger***
-PID
-stainless steel spoons, bowl and trowels
-riffle splitter
-No. 4 Wiley Mill, or equivalent

Method:

Consult Section 7.2 of the Operational Plan for methods and devices used to measure moisture content, temperature, oxygen and pH. Use the following steps to collect samples of compost for off-site analysis. Sample locations are provided in Figure 4-3. ***See Field SOP 2.0 in Appendix D of the approved Pilot Scale Operational Plan.***

~~1. Place temporary flags at each cross section to be sampled.~~
~~2. Take the sample marked "1" in Figure 4-3 first. Using the decontaminated hand auger **push tube** and attachments, bore **push** down approximately three feet and collect a sample. Retrieve enough volume to fill all required sample containers (see Section 4.4).~~
~~3. Place the contents of the bucket **tube** in a stainless steel bowl. Allow compost to air dry.~~
~~4. Macerate (soften) air-dried compost in No. 4 Wiley mill. Split the sample using a riffle splitter to fill containers.~~
~~5. Collect the samples marked "2" and "3" using a hand auger **push tube**. Make sure the auger **tube**, bucket and attachments are decontaminated prior to sampling the pile and in between sampling locations.~~
~~6. Take care not to sample material which has caved into the boring. If necessary, use a long length of PVC pipe to keep the hole open once the initial boring has been made.~~
~~7. Record all observations, including test results and off-site sample information (sample I.D., date, time, analysis), in the field log book. All field equipment will be calibrated daily per manufacturer guidelines. Record calibration data in the field logbook.~~
~~8. Samples for off-site analysis will be collected at the frequency summarized in Section 4.4.~~

Documentation and Shipping
Documentation procedures are provided in Section 5.0. Packaging and shipping instructions are provided in Table 4-5.

TABLE 4-4. COMPOST SAMPLING PROCEDURE
QA/QC: One field duplicate will be collected per compost pile, per sampling event, and analyzed for the same parameters as the regular samples (explosives, metals (barium, cadmium, total chromium, lead), TCLP-metals, TKN, TOC). Field equipment will be decontaminated using procedures in Section 4.7. One equipment rinsate will be collected per 20 samples collected and analyzed for the same parameters as the regular samples (explosives, metals (barium, cadmium, total chromium, lead), TKN, TOC). One field blank (type B) will be collected at the composting area (1 per ~~20~~ 24 samples) to determine if any contaminants were introduced during sampling. An additional field blank (type A) will be collected of the water used in decontamination. Both blanks will be tested for the same parameters as the regular samples (explosives, metals (barium, cadmium, total chromium, lead), TKN, TOC). A third field blank will be collected from the water used in the process, unless the source is the same as the potable water source for decontamination.

TABLE 4-5. PROCEDURE FOR SAMPLE DOCUMENTATION, PACKAGING AND SHIPPING

Objective:
To ensure that samples are properly packaged to prevent or minimize breakage and maintain sample integrity between the field and laboratory, and to maintain proper chain-of-custody protocols.

General:

For waste characterization samples, the Subcontractor shall be responsible for shipping samples to a Subcontractor-procured laboratory. All decontamination and rinse samples will be submitted by the Subcontractor to the Contractor-procured laboratory. The name and address of the Contractor-procured laboratory will be provided prior to work.

One trip blank (consisting of two 40-mL vials) will be submitted with each cooler of volatile organics samples shipped. All trip blanks will be prepared and shipped to the site by the Contractor-procured laboratory.

For each sample shipment, complete sample documentation, including labels, tags, chain-of-custody (COC) forms, etc. and properly package sample containers for shipment to the laboratory in accordance with the following procedures:

Sample Labels and Tags.

After a sample is collected, it shall be temporarily stored in the field in a cooler with 2-3 bags of ice. When sampling is completed, the cooler(s) shall be brought to the support zone. Any empty containers found in the cooler shall be discarded.

All sample containers sent to the laboratory shall be labeled and tagged, as possible. Labels shall be completed in ink. If an error is made on a label, strike out the erroneous item with a single line and initial the strike out.

At a minimum, the following information shall be included on each sample label and tag:

- Sample identification number;
- Analytical method; and
- Date and time of collection.

If enough room is available on the sample label or tag, the following information shall also be included:

- Site name,
- Location of Sample,
- Initials of sample collector, and
- Preservative, if applicable.

TABLE 4-5. PROCEDURE FOR SAMPLE DOCUMENTATION, PACKAGING AND SHIPPING

Chain-of-Custody Form (COC).

Once the samples have been recorded in the field logbook, complete the Chain-of-Custody (COC) form. Prior to filling out the COC form, verify that all samples are accounted for and all volume requirements are met. At least one COC shall be completed for each cooler of samples to be shipped. COC forms will vary slightly depending on the laboratory providing the forms. The Contractor will specify which COC format is to be used for decon and rinse water samples. The following general instructions shall be followed when completing the COC form:

a. If the COC form does not have a unique document number, assign a sequential reference number to the COC form and record this number in the top right corner of the document (i.e. COC #001). Each COC form shall have a unique reference number. Reference numbers, whether already included on the document, or assigned, shall be recorded in the field logbook.

b. Include one line on the COC form for each sample. Fill in the appropriate information in the columns on the form for each sample. Ensure the following information is included for each sample:
   - -sample identification number;
   - -sample location;
   - -date sample was collected;
   - -time sample was collected;
   - -sample matrix (i.e. water, sludge);
   - -size and quantity of containers included; and
   - -required analyses.

c. Specify QC samples (i.e. field blank, rinsate blank and trip blank), when collected. DO NOT specify duplicate samples. Trip blank "sample time" must be entered on the COC form. Use the time the cooler was sealed.

d. Ensure the sample time and sample I.D. on the COC form are exactly the same as on the sample container label or tag.

e. When specifying an analysis, write both the analysis and the method number.

f. Enter the turnaround time for the samples in the "Remarks" section of the COC form.

g. Complete the "Relinquished By" information (person, date and time) at the bottom of the COC form. The "Relinquished Time" should be roughly the time the cooler is sealed and given to overnight shipper.

h. Include the overnight shipment airbill number somewhere on the COC form. Record this number in the field logbook.

i. Keep one copy of the COC form for site records and submit the remaining copies to the Laboratory. Seal the Laboratory copies in a gallon size Ziploc™, or equivalent, bag and affix to the underside of the cooler lid using strapping tape.

TABLE 4-5. PROCEDURE FOR SAMPLE DOCUMENTATION, PACKAGING AND SHIPPING

Sample Preparation.

The following tasks will be completed, prior to sample packaging:

a. Remove visible dirt, residue and excess moisture from the sample jars;

b. Check container lids to ensure they are on tight;

c. Place sample jars (glass) in protective bubble wrap and seal using adhesive strip on bubble wrap package or tape.

Sample Packaging.

Package samples carefully to prevent breakage or movement of containers during shipment. The following guidelines shall be used for packaging:

a. Line the base and sides of the cooler with bubble wrap. Coolers designated for decon and rinse water samples will be provided by the Contractor-procured laboratory.

b. Pack the larger containers into the cooler first. Place double-bagged cubed ice or small containers between larger containers then pack the remaining smaller containers. Add additional double-bagged ice to the cooler, distributing as evenly as possible to chill all samples. This is **most important** with samples requiring VOC analysis.

c. Place a trip blank in each cooler containing samples to be analyzed for volatile organic compounds. The trip blank is a regular sample and must be labeled and recorded as such. It shall be analyzed for volatile organics only. When possible, keep all volatile organic analyses samples together in the same cooler to minimize the number of trip blanks required.

d. Don't overload the cooler with samples. Allow enough room for a layer of ice at the top, as well as a final layer of bubble wrap. At least one COC form shall be filled out for each cooler of samples. The samples and ice should be packed tight enough to prevent movement of containers during shipment.

e. Close the cooler and seal closed with custody seals. Use 2-3 custody seals (signed and dated) per cooler (small or large). Place seals on the front, side and back of each cooler where they shall be visible and easily ripped if the cooler is tampered with. Use a thin cover of strapping tape to protect the edges of the seal during shipment.

f. Seal the cooler with strapping tape.

TABLE 4-5. PROCEDURE FOR SAMPLE DOCUMENTATION, PACKAGING AND SHIPPING
Sample Shipping. Ship all samples to the laboratory for next-day delivery. Ensure the air bills have been completely filled out and copied. Place one airbill into each envelope. Affix the envelope to the top of the cooler, if the lid is flat. If the lid is sliding, as with a "playmate" cooler, affix the envelope to the side of the cooler. Do not obstruct address labels provided by the laboratory (if present). **NOTE**: If samples are collected on Friday, the block labeled "Saturday Delivery" on the airbill MUST BE MARKED. Otherwise the samples will arrive at the lab on Monday. Fax the Chain-of-Custody Form to the Contractor Project Chemist or designee [(216) 523-5201] the same day samples are shipped. If short turn-around time is needed, such as 24 or 48-hours, notify the Project Chemist **IMMEDIATELY** by phone. It is preferable to notify the Project Chemist of short turn-around times as soon as it is known that samples will require this.
QA/QC and Documentation: Maintain all generated sample documentation (copies of COCs, field logbooks, etc) in the field during the course of the site work. This documentation may be managed by the Contractor, or if managed by the Subcontractor will be available for review. At the conclusion of site work, provide a copy of all documentation to the Contractor.

TABLE 4-6. SUMMARY OF SAMPLING AND ANALYSIS PROGRAM

Task	Matrix	Parameters	Estimated No. of Samples(a)		QA/QC Samples				
			RS	FD	FBA	FBB	RB	TB	MS/ MSD
1. Initial Excavation Site Characterization	Soil	total VOCs (site-specific and those on the TCLP list), metals (Ba, Cr, Cd, Pb), TCLP-metals, Explosives	14+	2+	1	1+	1+	4+	1+
2. Equipment Wash Water/ Decon Water	Water	Explosives, **RCRA metals**, POTW parameters (as required by NSWC Crane)	3+	1	1	1	0	0	1
3. Storm Water Retention Pond Sampling	Water	NPDES parameters (listed in Table 4-8)	3+	1	1	1	0	0	1
4. Compost (Process) Sampling (includes confirmation sampling)	Compost + soil	Explosives, TOC, TKN (5 events: day ~~0, 7, 14, 21, 28)~~ **0, 5, 10, 20, 30, 40 and 60)**	12 per pile per event	1 per pile per event	1 per event (b)	2 per event	2 per event	0	5 per event
		metals (Ba, Cd, Cr, Pb), TCLP-metals (2 events: day 0, ~~28~~ **60** only)	12 per pile per event	1 per pile per event	1 per event (b)	2 per event	2 per event	0	5 per event
	Amend-ment~~(s)~~ ***Blend***	TOC, TKN	~~8~~ ***4 composites per pile***	~~1~~ ***0***	0	0	~~1~~ ***0***	0	~~1~~ ***0***
5. Excavation Soil Sampling	Soil	Explosives, site-specific VOCs, metals (Ba, Cd, Cr, Pb)	10+	1+	1	1+	1+	4+	1+

TABLE 4-6. SUMMARY OF SAMPLING AND ANALYSIS PROGRAM

Task	Matrix	Parameters	Estimated No. of Samples(a)		QA/QC Samples				
			RS	FD	FBA	FBB	RB	TB	MS/ MSD

Notes:

FBA = field blank type A (sample of waters used for decontamination, including distilled/deionized water and potable water); type A field blanks will be collected at a frequency of 1 per event per source of tap water for decontamination; analytical frequency will be finalized by the Project Chemist

FBB = field blank type B (water sample prepared during sampling event to determine if contamination introduced at sampling site); type B field blanks will be collected at a frequency of 1 per 20 regular samples; analytical frequency will be finalized by the Project Chemist

RB = rinsate blank or equipment rinsate blank

TB = trip blank (will be prepared by laboratory and tested for VOCs only)

MS/MSD = matrix spike and matrix spike duplicate (collected at a frequency of 1 per 20 samples collected)

RS = regular sample

FD = field duplicate

a. Sample totals are estimated. The numbers may increase or decrease based on field conditions.
b. An additional field blank (A) will be collected of the water used in composting (one time sampling only), unless it is the same water used in decontamination and steam cleaning.

TABLE 4-7. ANALYTICAL METHOD REQUIREMENTS				
Analyte	**Analytical Method[1]**	**Sample Container[2]**	**Preservation**	**Holding Time**
Initial Excavation Site Characterization Analyses (soil), Compost Solids, Soil in Excavation				
Volatile Organic Compounds (VOCs)	8240: methylene chloride, acetone, xylene, toluene, methyl ethyl ketone, methyl isobutyl ketone	1 4-ounce glass jar with Teflon-lined lid or brass sleeve (pack tightly!)	Ice to 4°C	14 days
VOCs (TCLP list)	8240: benzene, carbon tetrachloride, chloroform, chlorobenzene, 1,2-dichloroethane(1,2-DCA), 1,1-dichloroethene (1,1-DCE), methyl ethyl ketone, tetrachloroethene, trichloroethene, vinyl chloride			
Explosives	8330 (full list)	1 8-ounce glass jar with Teflon-lined lid or brass sleeve	Ice to 4°C	14 days; analyze within 40 days after extraction
Total metals (Barium, cadmium, total chromium, lead only)	6010	1 8-ounce glass jar with Teflon-lined lid or brass sleeve	Ice to 4°C	180 days
TCLP metals	1311, 6010, 7470	1 500 mL, plastic	HNO3 to pH < 2; ice to 4 degrees C	mercury; field collection to extraction 28 days; from extraction to analysis 28 days; other metals: 180 days from extraction to analysis

TABLE 4-7. ANALYTICAL METHOD REQUIREMENTS				
Analyte	**Analytical Method[1]**	**Sample Container[2]**	**Preservation**	**Holding Time**
Total organic carbon (TOC)	9060	1 8-ounce glass jar with Teflon-lined lid or brass sleeve	Ice to 4°C	28 days
Total kjeldahl nitrogen (TKN)	EPA 351.3			28 days
Water Analyses (decontamination water, storm water retention pond)				
Explosives	8330 (full list)	2 1-L amber glass jars	Ice to 4°C	7 days; analyzed within 40 days after extraction
total suspended solids (TSS)	EPA 160.2	1 500-mL plastic	Ice to 4°C	7 days
chemical oxygen demand (COD)	EPA 410.1, 410.2	1 250-mL plastic	H2SO4 to pH < 2, Ice to 4°C	28 days
biochemical oxygen demand (5-day BOD)	EPA 405.1	1 1-L amber glass jar	Ice to 4°C	**48 hours**
Oil and Grease	EPA 413.1	2 1-L amber glass jars	HCL to pH < 2; Ice to 4°C	28 days
Nitrate	EPA 300.0	1 500-mL plastic	Ice to 4°C	**48 hours**
Ammonia-N	EPA 350.2	1 500-mL plastic	H2SO4 to pH < 2; Ice to 4°C	28 days
Additional Water Analyses (blanks)				
Volatile Organics	8240: methylene chloride, acetone, xylene, toluene, methyl ethyl ketone, methyl isobutyl ketone, benzene, carbon tetrachloride, chloroform, chlorobenzene, 1,2-DCA, 1,1-DCE, vinyl chloride tetrachloroethene, trichloroethene,	3 40-mL glass vials	HCL to pH < 2; Ice to 4°C	14 days

TABLE 4-7. ANALYTICAL METHOD REQUIREMENTS

Analyte	Analytical Method[1]	Sample Container[2]	Preservation	Holding Time
Explosives	8330 (full list)	2 1-L amber glass jars	Ice to 4°C	7 days; analyze within 40 days after extraction
RCRA metals	6010	1 500-mL plastic	HNO3 to pH < 2; Ice to 4°C	180 days
TOC	EPA 415.1	1 500-mL plastic	H2SO4 to pH < 2, Ice to 4°C	28 days
TKN	EPA 351.3			28 days

Notes:

Note holding times in **bold-face** type.

1. SW-846 methods (latest revision) will be used unless otherwise noted.
2. Container size may vary from lab to lab. Aliquots from several analyses may be obtained from one container, as directed by the laboratory.

TABLE 4-8. NPDES DISCHARGE LIMITATIONS[1]

Parameter	Monthly Limit - Average (mg/L)	Monthly Limit - Maximum (mg/L)
Total Suspended Solids (TSS)	10	15
Chemical Oxygen Demand (COD)	10	15
Biochemical Oxygen Demand (BOD)	10	15
Oil and Grease	26	52
Nitrate	N/A	90
Ammonia-N	3	6
pH (field measured)[2]	between 5.0 and 11.0 units	

Notes:

1. These values were obtained from the NPDES permit no. IN 0021539 (highest levels permitted).
2. Field pH will be measured using a~~n Orion Model~~ ***Horbia Twin B-Z13 or a Hach Model EC10*** pH meter (290). Calibration data and model information will be recorded in the field logbook, *including results.*

N/A = not available

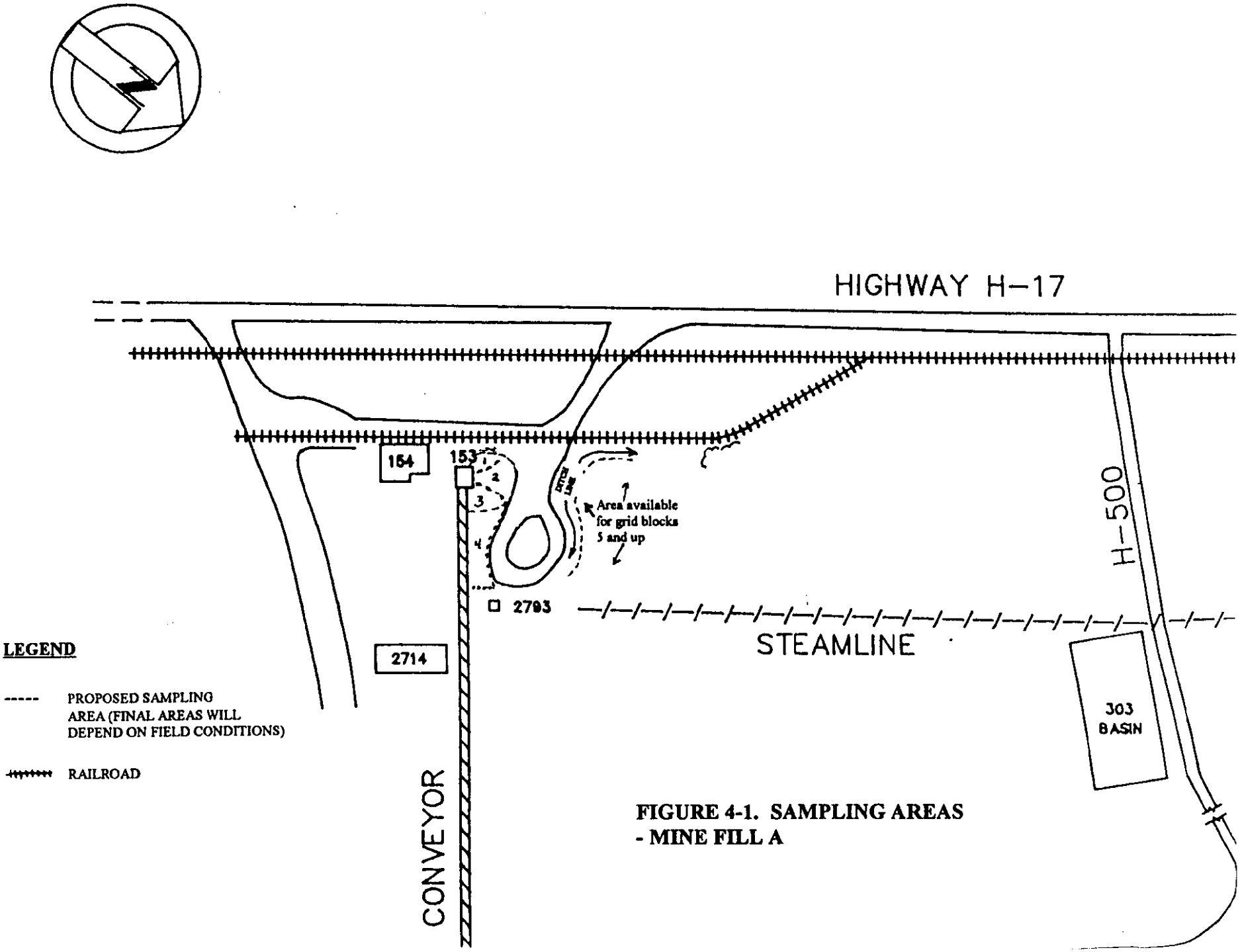

FIGURE 4-1. SAMPLING AREAS - MINE FILL A

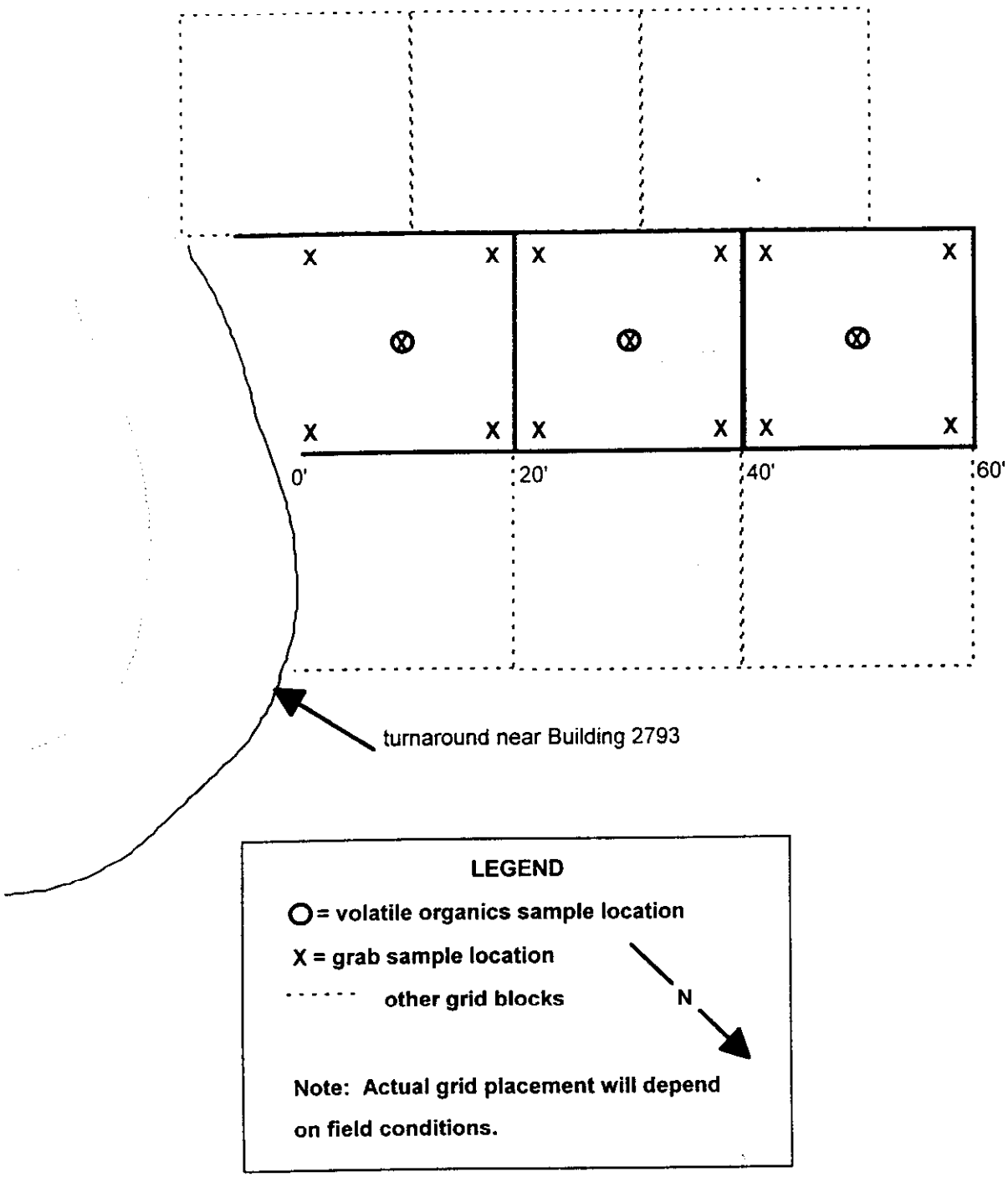

FIGURE 4-2. EXAMPLE GRID LAYOUT - BUILDING 153/2793 VICINITY

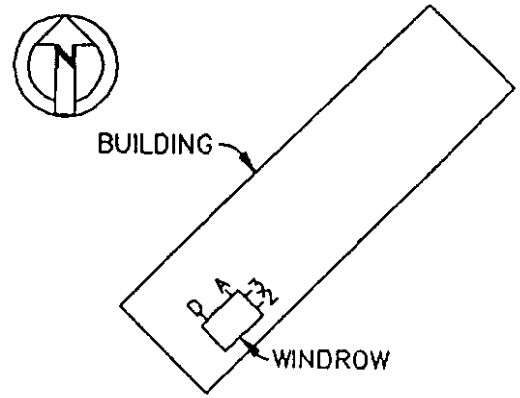

KEY PLAN

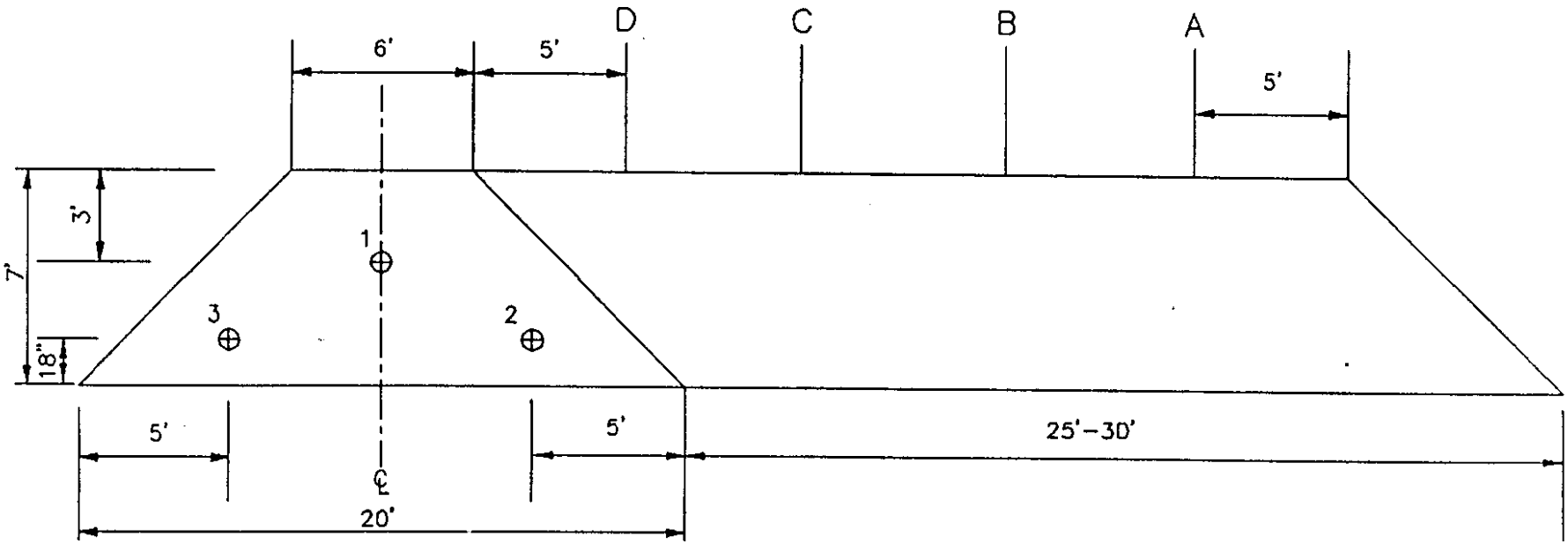

PILOT SCALE
WINDROW SAMPLE LOCATIONS

MORRISON KNUDSEN CORP.	
Drawing FIGURE 4-3 A	Rev. 0
Date 10/10/96	Sheet 1

NOTE: ALL SAMPLE NUMBERS FOLLOWED BY AN "A" WILL BE TAKEN AT 1' BELOW THE SURFACE.

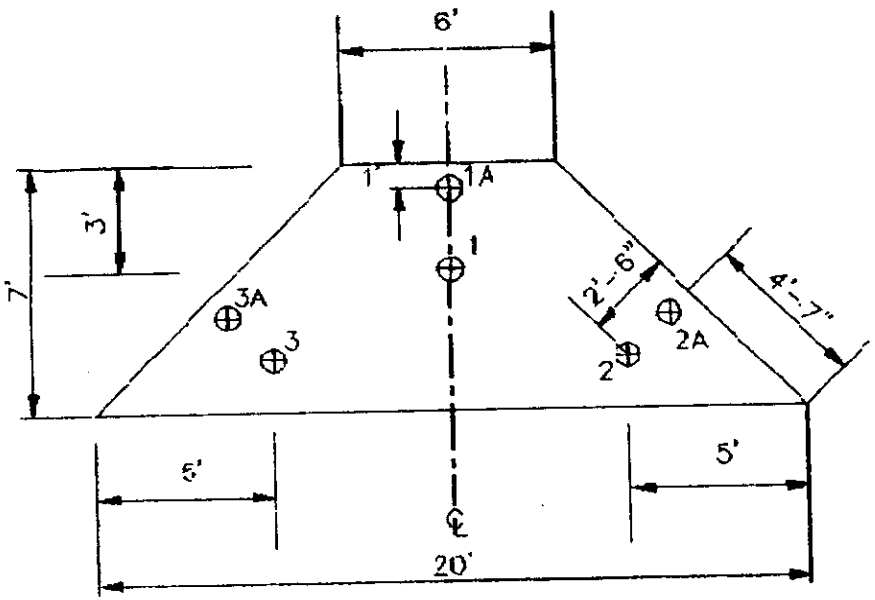

SECTION A–A

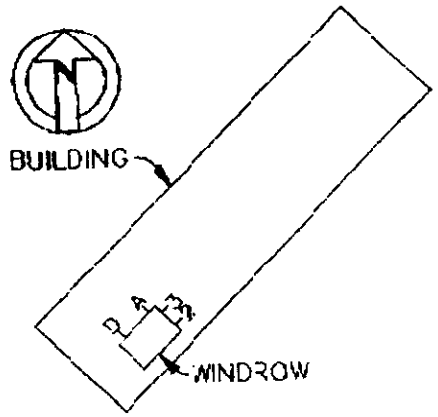

KEY PLAN

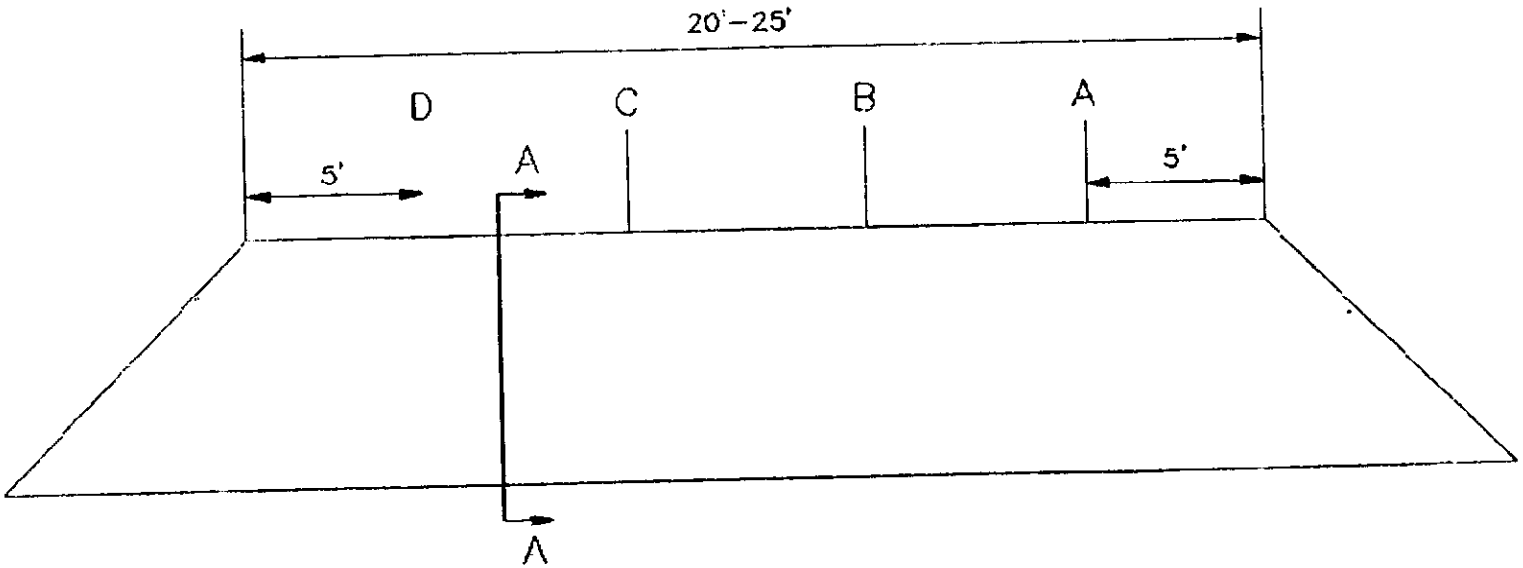

PILOT SCALE
WINDROW SAMPLE LOCATIONS

MORRISON KNUDSEN CORP.	
Drawing FIGURE 4–3	Rev. 1
Date 5/28/97	Sheet 1

DRAWING NAME: F:\JOBS\SEF\DRAWE\PSCALEP.DWG

SECTION 6
CALIBRATION PROCEDURES AND FREQUENCY

This section describes the calibration procedures and the frequency at which these procedures will be performed for both field and laboratory instruments.

6.1 FIELD INSTRUMENT CALIBRATION

Field instruments will be calibrated as prescribed by the owner's manual. Instruments, including the PID, pH meter and temperature/oxygen probe will be calibrated daily, ~~in the morning,~~ prior to use. Calibration data will be documented in the field logbook. ~~A post-calibration may be completed at the end of the day as a check on instrument function.~~ Calibration procedures for field test display instruments and the PID are provided as Appendix E, and are summarized below.

pH Meter Calibration (Horiba Twin B-213, the following procedure will be adjusted as needed to meet the requirements of this device)

The pH meter will be calibrated with standard buffer solutions before being taken to the field. In the field, the meter will be calibrated daily with two buffer solutions before use. The range of the buffer solutions will be at least three or more pH units apart and will bracket the expected pH of the sample being measured.

- Ensure the temperature of the buffer and the sample are the same.
- Connect pH electrode into pH meter and turn on the pH meter.
- Set temperature setting based on the temperature of the buffer; place electrode in first buffer solution.
- After reading has stabilized, adjust "CALIB" (or equivalent) knob to display correct value.
- Repeat procedure for second buffer solution.
- Place pH electrode in the sample and record the pH as displayed.
- Remove pH electrode from sample and rinse off with distilled water.
- Recalibrate the pH meter every time it is turned off and turned back on, or if it starts giving erratic results.

PID (MicroTIP MP-1000) (from user's manual)

MicroTIP must be calibrated daily in order to display concentrations in units equivalent to ppm. First a supply of zero air, which contains no ionizable gases or vapors, is used to set MicroTIP's zero point. Then, span gas, containing a known concentration of a photoionizable gas or vapor, is used to set the sensitivity. Usually clean ambient air will be suitable as zero air. Isobutylene at 100 ppm in air is recommended as span gas.

- Connect the supplied regulator to the span gas cylinder. Hand tighten the fittings. Observe proper handling techniques for all gases.
- Open the gas valve on the gas bag by turning the valve stem fully counterclockwise.
- Attach the nut to the regulator. Hand tighten the fittings.
- Turn the regulator knob counterclockwise about half a turn to start the flow of gas.
- Fill the gas bag about half full and then close the regulator fully clockwise to turn off the flow of gas.
- Disconnect the bag from the adapter and empty it. Flush the bag a few times with the span gas and then fill it.
- Close the gas bag by turning the valve clockwise.
- Press SETUP and select the desired Cal memory with the arrow keys and press ENTER. Press EXIT to return to the normal display.
- Press CAL and enter the desired response factor. Use a table of response factors available in the User's Manual to find the factor for the compound of interest. If the compound is not in the table or you are not looking for one specific compound, enter 1.00. The concentration detected by MicroTIP will be multiplied by the response factor before it is displayed and logged.
- Expose MicroTIP to zero air. Press ENTER and MicroTIP sets its zero point.
- MicroTIP then asks for the span gas concentration. Enter the known span gas concentration and then connect the span gas bag adapter to the inlet.
- Press ENTER and MicroTIP sets its sensitivity.
- When MicroTIP's display reverts to normal, MicroTIP is calibrated and ready for use. Remove the span gas bag from the inlet.

Temperature/Oxygen Probes (Reotemp)

If the monitor/probe has not been used for 15 minutes, it will automatically shut down.

To turn on the monitor, press any key on the front panel. Press the far right hand key until you reach AUTOCAL. Press RUN. The instrument will sample room air and set a reading of 20.9% oxygen automatically.

6.2 LABORATORY INSTRUMENT CALIBRATION

Laboratory instruments will be calibrated at prescribed intervals and/or as part of daily use. Frequency will be based upon the analytical method, type of equipment, inherent stability, and manufacturer's recommendations. Equipment will be calibrated, whenever possible, using reference standards having known relationships to nationally recognized standards or accepted values of physical constants. If national standards do not exist, the basis for calibration will be documented.

The analytical laboratory will be responsible for the maintenance of laboratory instruments and equipment. Instruments, and the measurements made as part of the analytical methodology, will be as specified in the method, without modification. The laboratory's quality assurance (QA) program ensures that only trained personnel perform routine maintenance on all major instruments and that repairs are performed by trained laboratory personnel or service technicians employed by the instrument manufacturer or representative. Instrument maintenance will be appropriately documented through the use of instrument logs which will be included in the laboratory project file.

General calibration information is provided in Section 1 of Appendix F. SOP calibration information is summarized in Table 6-1.

TABLE 6-1. CALIBRATION CRITERIA - LABORATORY METHODS

Parameter	SOP Number	Table (if applicable)	Page Number	
			Appendix F-	SOP page number
Volatile Organic Compounds (Method 8240)	MS300	Table 3 - Tune Criteria	43	12
		Table 8 - Criteria for CCCs	45	14
		Table 9 - Criteria for SPCCs	45	14
		Table 13 - equations for RFs	49	18
Explosives	GC200	Section VII.C.	71	7
Metals	MT913B	Section IX (quality control)	91	4
Mercury	MT310B	Section IV.C	105	6
TOC - soil	IN045S	Section VII.B	117	2
TOC - water	IN045W	Section VII	123	2
TKN, TSS, COD, BOD, ammonia-N	(none required)			
Oil and grease	IN200, IN205	Section VII.B	252	3
Nitrate	IN030B	Section VIII	262	4

SECTION 7
ANALYTICAL PROCEDURES

This section describes the analytical procedures for all samples collected for analysis.

7.1 FIELD ANALYTICAL PROCEDURES

Operation and QC procedures for the PID, pH meter and temperature/oxygen probes are provided in Appendix E ***and SOP 1.0 in Appendiz D of the approved Operational Plan***.

7.2 LABORATORY ANALYTICAL PROCEDURES

The laboratory will implement project required Standard Operating Procedures (SOPs). These laboratory SOPs for sample preparation, cleanup and analysis are based on the latest SW-846 Revision (U.S. EPA, January 1995) and EPA methods for methods of chemical analysis of water and waste (USEPA, 1983) . These SOPs which provide sufficient details and are specific to this RCRA Corrective Action Interim Measure are provided in Appendix F and summarized in Table 7-1.

The site samples for volatile organic compounds analysis (VOA) may be screened in the laboratory, as described in the VOA SOP and shall be analyzed, either as low or medium level concentration samples, or as a series of dilutions in order to cover the expected concentration range of the site-specific compounds of interest.

The documentation of appropriate method validation for the project target compounds will be submitted in the Pilot Scale Completion Report. It includes the criteria for acceptance, rejection or qualification of data.

7.2.1 List of Project Target Compounds and Laboratory Reporting Limits

A listing of project target compounds, soils cleanup levels, and analytical methods to be used for samples collected during the project are summarized in Tables 1-3, 1-4, and 1-5. Reporting limits are provided in Table 1-4. Other analytical results will be reported using standard method PQLs as reporting limits. Standard method detection limits for

each method in Table 1-5 are provided in Appendix B.

7.2.2 List of Associated QC Samples

The analytical methods and laboratory SOPs include a QC section which address the minimum QC requirements for the analysis of specific analyte groups. Compounds to be spiked will be representative of the target compounds of interest. Section 7.1 of the Sampling and Chemical Analysis Quality Assurance Requirements for the Navy Installation Restoration Program (NEESA, 1988) contains a complete listing of the associated QC samples required for this project. This document is provided as Appendix H.

TABLE 7-1. SUMMARY OF SOPs		
Parameter(s)	**SOP Number**	**Analytical Method**
SOIL		
Volatile Organics	MS300	8240
Explosives	GC200	8330
Arsenic	MT913B	6010
Barium	MT913B	6010
Cadmium	MT913B	6010
Chromium	MT913B	6010
Lead	MT913B	6010
Mercury	MT310B	7471
Selenium	MT913B	6010
Silver	MT913B	6010
TCLP - metals	HW700/HW710, MT913B, MT310B	1311, 6010
TOC	IN045S	9060
TKN	IN170	EPA 351.3
WATER		
Volatile Organics	MS300	8240
Explosives	GC200	8330
Arsenic	MT913B	6010
Barium	MT913B	6010
Cadmium	MT913B	6010
Chromium	MT913B	6010
Lead	MT913B	6010
Mercury	MT310B	7470
Selenium	MT913B	6010
Silver	MT913B	6010
TOC	IN045W	EPA 415.1

TABLE 7-1. SUMMARY OF SOPs

Parameter(s)	SOP Number	Analytical Method
TKN	IN170	EPA 351.3
total suspended solids (TSS)	IN275	EPA 160.2
chemical oxygen demand (COD)	IN090D, IN090C	EPA 410.2
Biochemical oxygen demand (5-day BOD)	IN025	EPA 405.1
Oil and Grease	IN200, IN205	EPA 413.1
Nitrate	IN030, IN055, IN135, IN185, IN195, IN255, IN295	EPA 300.0
Ammonia-N	IN020	EPA 350.2

Notes:

1. SOPs are laboratory confidential. SOPs are provided by Southwest Laboratories (Broken Arrow, Oklahoma)

SECTION 13
CORRECTIVE ACTION

13.1 CHANGE CONTROL

Prior to implementation, changes to original documents, procedures, and specifications will require approval by the ***U.S. Navy and the U.S. EPA* representatives.** ~~parties originally responsible for approval of this document.~~ It is the responsibility of project personnel to appropriately record the change and to make the documentation available to the PM and SQCS. The effect of the change on the project will then be evaluated by the PM and SQCS. A description of the proposed change, along with the results of the evaluation, will be presented to the Navy for approval. Following Navy approval, the change will be documented as a revision to the original document to reflect the work as actually performed.

13.2 FIELD CORRECTIVE ACTION

Nonconforming items and activities are those which do not meet the project requirements, procurement document criteria, or approved work procedures. Nonconformances may be detected and identified by:

- Project Staff - During the performance of field investigation and testing, supervision of subcontractors, and preparation and verification of analyses and design,

- Laboratory Staff - During the preparation for and performance of laboratory testing, calibration of equipment, and quality control activities, and

- Quality Assurance Personnel - During the performance of audits or daily review of field reports or data.

Each nonconformance affecting quality will be documented by the personnel identifying the nonconformance. For this purpose, a standard form (e.g., Nonconformance Report), results of laboratory analysis quality control tests, audit report, internal memorandum, or letter will be used as appropriate. Documentation will include:

- Identification of the individual(s) identifying the nonconformance,

- Cause and description of the nonconformance,
- Method(s) for correcting the nonconformance (corrective action) or description of the variance granted,
- Schedule for completing corrective action, and
- Any required approval signatures.

Documentation will be distributed to the Program Quality Control Manager (PQCM) with copies to the PM and SQCS. It is then the responsibility of the PQCM to approve and initiate resolution for the institution of the necessary corrective action to the nonconformance. Documentation describing the nonconformance and the corrective action implemented will be placed in the project file. Completion of corrective actions for significant nonconformances should be verified by quality assurance personnel as part of future auditing activities.

Any recurring nonconformance should be evaluated by project, laboratory, and/or quality assurance personnel to determine its cause and appropriate changes instituted in project requirements and procedures to prevent future recurrence. When such an evaluation is performed, the results will be documented.

13.3 LABORATORY CORRECTIVE ACTION

Corrective action in the laboratory may occur prior to, during and after initial analyses. A number of conditions such as broken sample containers, multiple phases, low/high pH readings, and potentially high concentration samples may be identified during sample log-in or just prior to analysis. Following consultation with lab analysts and section leaders, it may be necessary for the Laboratory Quality Assurance (QA) Officer to approve the implementation of corrective action. The laboratory standard operating procedures (SOPs) specify some conditions during or after analysis that may automatically trigger corrective action or optional procedures. These conditions may include dilution of samples, additional sample extract cleanup, automatic reinjection/reanalysis when certain quality control criteria are not met, etc.

The bench chemist will identify the need for corrective action. The Laboratory Project Manager, in consultation with the Laboratory supervisor and staff, will approve the required corrective action to be implemented by the laboratory staff. The Laboratory QA Officer will ensure implementation and documentation of the corrective action. If the nonconformance causes project objectives not to be achieved, it will be necessary

to inform all levels of project management including the USEPA RPC to concur with the corrective action.

These corrective actions are performed prior to release of the data from the laboratory. The corrective action will be documented in both Laboratory's corrective action log (signed by analyst, section leader and quality control coordinator), and the narrative data report sent from the laboratory to the MK Project Chemist. If corrective action does not rectify the situation, the laboratory will contact the NSWC Project Manager.

13.4 CORRECTIVE ACTION DURING DATA VALIDATION AND DATA ASSESSMENT

The facility may identify the need for corrective action during either the data validation or data assessment. Potential types of corrective action may include resampling by the field team or reinjection/reanalysis of samples by the laboratory.

These actions are dependent upon the ability to mobilize the field team, whether the data to be collected is necessary to meet the required quality assurance objectives (*e.g.*, the holding time for samples is not exceeded, etc.) When the MK Project Chemist identifies a corrective action situation, it is the MK Project Manager who will be responsible for approving the implementation of corrective action, including resampling, during data assessment. All corrective actions of this type will be documented by the SQCS.

INSTRUCTIONS FOR
PILOT SCALE OPERATIONS PLAN
ADDENDUM
Revision 6
August 14, 1997

1. Remove entire Pilot Scale Operational Plan text except for Figure 6-2, page 6-10 (foldout) and Figure 4-1 page 4-2 and replace with attached.

2. Remove entire Appendix A text except for Figure A-1, page A-79. Replace "Draft Explosive Hazard Analysis Report....." with "Final Explosives Hazard Analysis Report....". Add Letter of Recommendation dated July 17, 1997 from Dave Beall Project Manager to Chris Freeman EPD Representative, and add "Hazard Review of Wiley Mill" dated May 1990.

3. Remove Appendix C cover page and Table of Contents; replace with attached and add foldout drawings G-100, 4324-0009-01-A, -B, -C, P-100, -101, -102, and -103.

4. Remove Appendix D cover page, SOP 1, 2, 3, 4, 5, 6, 7, 8, and 10. Replace with new cover page, Table of Contents and attached SOPs.

5. Remove Figure E-1 in Appendix E and replace with attached.

6. Remove entire Appendix F and replace with attached.

7. Remove Windrow Process Data Daily Log and replace with attached. Add attached Laboratory Moisture Data Form Sheets 1 and 2.

8. Remove cover page and Table of Contents of Appendix H and replace with attached.

Pilot Scale Operational Plan
for Bioremediation Facility
NSWC Crane - Crane, Indiana

PILOT SCALE OPERATIONAL PLAN
FOR
SOILS BIOREMEDIATION FACILITY

NSWC CRANE
Crane, Indiana

CONTRACT #N62467-93-D-1106
DELIVERY ORDER #0009
STATEMENT OF WORK #007

Revision ~~5~~ ***6***
~~**June 6, 1997**~~
August 14, 1997

Prepared for:

SOUTHERN DIVISION
NAVAL FACILITIES ENGINEERING COMMAND
2155 EAGLE DRIVE
P.O. BOX 190010
NORTH CHARLESTON, SOUTH CAROLINA 29419-9010

Prepared by:

MORRISON KNUDSEN CORPORATION
2420 Mall Drive
Corporate Square 1 - Suite 211
North Charleston, South Carolina 29406

Rev. 6

CONTRACT
N62467-93-D-1106

DO 0009
SOW 007

Prepared by

MORRISON
KNUDSEN
CORPORATION

August 14, 1997

PILOT SCALE
OPERATIONAL PLAN
FOR
SOILS BIOREMEDIATION FACILITY

NSWC CRANE
Crane, Indiana

CONTRACT #N62467-93-D-1106
DELIVERY ORDER #0009
STATEMENT OF WORK #007

Revision ~~5~~ ***6***
~~**June 6, 1997**~~
August 14, 1997

Prepared for:

SOUTHERN DIVISION
NAVAL FACILITIES ENGINEERING COMMAND
2155 EAGLE DRIVE
P.O. BOX 190010
NORTH CHARLESTON, SOUTH CAROLINA 29419-9010

Prepared by:

MORRISON KNUDSEN CORPORATION
2420 Mall Drive
Corporate Square 1 - Suite 211
North Charleston, South Carolina 29406

PILOT SCALE
OPERATIONAL PLAN

INTERIM MEASURES CLEANUP
AT
SOILS BIOREMEDIATION FACILITY

NSWC CRANE
Crane, Indiana

Revision 5 *6*
~~June 6, 1997~~ *August 14, 1997*

CONTRACT N62467-93-D-1106
DELIVERY ORDER #0009
STATEMENT OF WORK #007

Prepared by:

MORRISON KNUDSEN CORPORATION
2420 MALL DRIVE
CORPORATE SQUARE 1 - SUITE 211
NORTH CHARLESTON, SOUTH CAROLINA 29406

PREPARED/APPROVED BY:

Don J. Miller — Date
MK Project Engineer

APPROVALS:

Robert E. Hlavacek — Date
MK Program Manager

CLIENT ACCEPTANCE:

U. S. Navy Responsible Authority — Date

NSWC Crane Public Works Officer — Date

U.S. EPA ACCEPTANCE:

U.S. EPA Region 5 **RCRA** Project Coordinator — Date

TABLE OF CONTENTS

SECTION		PAGE
1.0	INTRODUCTION	1-1
1.1	PURPOSE	1-1
1.2	PRIMARY OBJECTIVES	1-2
1.2.1	Performance Goals	1-6
1.2.2	Process Goals	1-~~7~~ ***6***
1.3	BACKGROUND	1-7
1.4	BENCH-SCALE TREATABILITY RESULTS	1-11
1.4.1	Phase I	1-11
1.4.2	Phase II	1-11
1.4.3	Phase III	1-1~~2~~ ***11***
2.0	REGULATORY COMPLIANCE	2-1
2.1	CONTAMINATED MEDIA CLASSIFICATION	2-1
2.2	STORM WATER DISCHARGE	2-1
2.3	LANDFILL PERMITTING	2-2
2.4	EXCAVATION PERMITTING	2-2
2.5	SPECIFICATIONS, CODES, AND STANDARDS	2-2
3.0	PROJECT ORGANIZATION	3-1
4.0	SCHEDULE	4-1
5.0	BIOREMEDIATION FACILITY DESCRIPTION	5-1
5.1	COMPOST BUILDING AREA	5-1
5.2	AMENDMENT STORAGE AREA	5-~~1~~ ***2***
5.3	AMENDMENT HAUL ROAD AREA	5-2
5.4	EQUIPMENT AND PERSONNEL DECONTAMINATION AREA	5-2
5.5	OFFICE AND LABORATORY TRAILER AREA	5-~~2~~ ***3***
5.6	STORM WATER DIVERSION AND RETENTION CONTROLS	5-3
6.0	PILOT SCALE OPERATION	6-1
6.1	RECIPE SELECTION	6-~~1~~ ***2***
6.2	SOIL EXCAVATION, SCREENING, AND SITE RESTORATION	6-~~3~~ ***6***
6.2.1	Soil Excavation	6-~~3~~ ***7***
6.2.2	Soil Screening	6-~~5~~ ***7***
6.2.3	Backfilling and Site Restoration	6-~~7~~ ***8***
6.3	AMENDMENT SUPPLY AND STORAGE	6-~~7~~ ***11***
6.4	LOAD AMENDMENTS INTO GRINDER/MIXER	6-~~8~~ ***13***
6.5	LOAD AMENDMENT BLEND INTO WINDROW	6-~~8~~ ***13***
6.6	LOAD SOIL INTO WINDROW	6-~~11~~ ***14***

TABLE OF CONTENTS (continued)

SECTION **PAGE**

6.7 TURN/MIX WINDROW . . . . . 6-~~12~~ ***15***
6.8 LANDFILL PERMITTING . . . . . 6-~~13~~ ***18***
6.9 UNLOAD WINDROW AND TRANSPORT FOR DISPOSAL . . . . . 6-~~13~~***18***

7.0 AUXILIARY SYSTEMS DESCRIPTION 7-1
7.1 ANALYTICAL SERVICES 7-1
7.1.1 Field Screening Services 7-1
7.1.2 Analytical Laboratory Services . . . . . 7-~~1~~ ***2***
7.2 DECONTAMINATION 7-2
7.2.1 Excavation Site Equipment and Rock Washing 7-2
7.2.2 Biofacility Truck and Equipment Washing 7-3
7.2.3 Personnel Decontamination Shower Trailer 7-3
7.3 WATER/FLUID COLLECTION AND DISPOSITION 7-3
7.3.1 Compost Building Sump Water 7-3
7.3.2 Truck and Equipment Decontamination Water 7-4
7.3.3 Storm water Diversion and Retention Pond Water 7-4

8.0 PROCESS PARAMETERS AND MONITORING 8-1
8.1 PROCESS PARAMETERS 8-1
8.2 PROCESS MONITORING 8-1
8.2.1 Temperature Monitoring . . . . . 8-~~3~~ ***2***
8.2.2 Moisture Level Monitoring 8-4
8.2.3 pH Level Monitoring . . . . . 8-~~5~~ ***6***
8.2.4 Total Organic Carbon Level Monitoring 8-6
8.2.5 Nitrogen Level Monitoring 8-6
8.2.6 Oxygen Level Monitoring . . . . . 8-~~6~~ ***7***
8.2.7 Explosives Level Monitoring 8-7
8.2.8 Metal Contaminants Monitoring 8-8
8.2.9 Air Monitoring . . . . . 8-~~8~~ ***9***

9.0 SAMPLING AND ANALYSIS 9-1
9.1 COMPOST WINDROW SAMPLING 9-1
9.2 FLUID COLLECTION SYSTEMS SAMPLING 9-1
9.3 PRE-EXCAVATION SITE SAMPLING . . . . . 9-~~1~~ ***3***
9.3.1 Sampling Areas 9-3
9.3.2 Soil Sampling 9-3
9.3.3 Marking Grid Blocks for Excavation . . . . . 9-~~3~~ ***4***

TABLE OF CONTENTS (continued)

SECTION **PAGE**

10.0 OPERATING EQUIPMENT DESCRIPTIONS 10-1

11.0 QUALITY CONTROL 11-1

12.0 WASTE MANAGEMENT 12-1

13.0 ENVIRONMENTAL PROTECTION 13-1
13.1 INTRODUCTION 13-1
13.2 MEASURES FOR PROTECTING NATURAL RESOURCES 13-1
13.2.1 Dust Control.. 13-1
13.2.2 Erosion and Sediment Control 13-1

14.0 RECORDS AND RECORDING 14-1

15.0 SITE SAFETY, HEALTH, EMERGENCY RESPONSE AND CONTINGENCY PLAN 15-1
15.1 SITE SAFETY AND HEALTH PLAN 15-1
15.2 AIR MONITORING 15-1
15.3 AIR SAMPLING 15-2
15.4 NOISE MONITORING 15-3

16.0 DEMOBILIZATION 16-1
16.1 EQUIPMENT 16-1
16.2 PROJECT FACILITIES 16-1

17.0 REFERENCES 17-1

LIST OF TABLES

TABLE **PAGE**

1-1 REMEDIAL PERFORMANCE GOALS AND ACCEPTABLE REPORTING LIMITS 1-3
1-2 PROCESS GOALS 1-7
1-3 SUMMARY OF PREVIOUS SOIL BORING RESULTS - MINE FILL A 1-9
1-4 MIX #7 BENCH-SCALE TEST RESULTS . . . . . 1-~~13~~ ***12***
1-5 DEWAR RECIPES 1-14
3-1 PROJECT RESPONSIBILITIES 3-3
6-1 ***FINAL*** PILOT SCALE WINDROW RECIPES ***(MIXES 1-6)*** . . . . . 6-~~2~~ ***4***
6-1a FINAL PILOT SCALE WINDROW RECIPES (MIX 7). 6-5
8-1 NON-CONTAMINANT PROCESS PARAMETERS 8-3
8-2 EXPLOSIVES PROCESS . . . . . 8-~~7~~ ***8***
9-1 SAMPLING AND ANALYSIS SCHEDULE 9-2
10-1 OPERATING EQUIPMENT 10-1

LIST OF FIGURES

FIGURE **PAGE**

1-1 SWMU 12/14, MINE FILL A 1-8
1-2 SWMU 12/14, MINE FILL A SAMPLE LOCATIONS 1-10
4-1 PILOT SCALE OPERATION SCHEDULE 4-2
6-1 SOIL EXCAVATION AREA . . . . . 6-~~4~~ ***9***
6-2 TRANSPORTATION ROUTE FROM MINE FILL A TO BIOFACILITY . . . . 6-~~6~~ ***10***
6-3 WINDROW FORMATION DIMENSIONS . . . . . 6-~~9~~ ***16***
6-4 SOIL LOADING . . . . . 6-~~10~~ ***17***
8-1 DECISION FLOW CHART . . . . . 8-~~2~~ ***3***

APPENDICES

APPENDIX **PAGE**

A PILOT SCALE SITE SAFETY AND HEALTH PLAN A-1
B PHOTOGRAPHS B-1
C BIOREMEDIATION FACILITY DRAWINGS C-1
D STANDARD OPERATING PROCEDURES D-1
E SOIL EXCAVATION PLAN E-1
F SUPPLEMENT TO QAPP F-1
G QC CHECKLISTS AND LOGS G-1
H QUALITY CONTROL PLAN H-1

1.0
INTRODUCTION

The Naval Surface Warfare Center (NSWC) Crane, located in southwestern Indiana, provides support for equipment, shipboard weapons systems, and ordnance. In addition, NSWC supports the Crane Army Ammunition Activity including production and renovation of conventional ammunition, storage, shipment, and demilitarization and disposal of conventional ammunition.

The Department of Defense (DOD) has utilized bioremediation, or composting, to treat explosives contaminated soil since 1982. Bioremediation has proven to be successful at other sites having explosive contaminated materials (Weston, 1993). Explosive contaminants in soils and sludges that have been successfully degraded by composting include: TNT, RDX, HMX, Tetryl, and nitrocellulose (U.S. EPA, 1993a, 1993b). The preferred treatment alternative for explosive contaminated soils from the Ammunition Burning Ground (ABG), Rockeye, Mine Fill A, and Mine Fill B Solid Waste Management Units at NSWC Crane is on-site bioremediation. Bioremediation of contaminated soil is preferred due to its ability to treat material on-site with limited transportation, lower costs, and high treatment efficiency.

The first phase of the bioremediation interim measures process will consist of a pilot scale operation. This will be followed by the second phase, full scale operation upon success of pilot scale testing. This plan discusses only the first phase of operation, the pilot scale operation.

1.1 PURPOSE

The purpose of this operational plan is two-fold, 1) provide operational guidance, parameters, target goals, and safety considerations for a pilot scale operation and 2) institute a successful operation which, in turn, would provide lessons learned and cleanup goals for a full scale operation. This plan may be modified, amended, or revised, with the approval of the United States (U.S.) Navy and the **United States Environmental Protection Agency (**U.S. EPA**)**, to optimize system performance throughout the pilot scale program. The following documents are provided for the Soils Bioremediation Project and will be used in conjunction with each other:

1. The approved *Quality Assurance Project Plan (QAPP) For Pilot Scale Operations at the Soils Bioremediation Facility,* which addresses the quality assurance, sampling and analytical requirements of the bioremediation pilot scale operation.

2. The approved *Pilot Scale Operational Plan For Soils Bioremediation Facility*, which addresses the descriptions and requirements for operating the pilot scale bioremediation facility.

3. The approved *Pilot Scale Site Safety and Health Plan* (SSHP), which is Appendix A to the Pilot Scale Operational Plan For Soils Bioremediation Facility and addresses the life cycle safety and health management, emergency preparedness and prevention, contingency planning, and emergency procedures**. And**,

4. The approved *Soil Erosion Control Plan for Bioremediation Facility,* which addresses the erosion and sediment control measures for the Bioremediation Facility construction.

The pilot scale operation is designed to verify scale-up factors, treatment performance and operating parameters from the bench scale treatability study performed by the **U.S.** Army Corps of Engineers, Waterways Experiment Station (WES). In addition to the WES recommendations, other manure (chicken), bulking agents and amendments (straw, corn stalks, and wood chips), and higher soil loadings will be used for operational performance enhancement. The successful data provided by the pilot scale operation will be used, in conjunction with the risk assessment values generated for NSWC Crane, to establish practical explosive contaminated soil cleanup goals for the full scale operation.

SWMU 12/14, Mine Fill A, has been selected as the source of contaminated soil for the pilot scale operation. This area has been selected due to its high concentrations of RDX, TNT, and concentrations of other explosives as described in Section 1.3 as well as its uninhibited access without impact of ongoing facility activities.

1.2 PRIMARY OBJECTIVES

The objective of pilot scale testing at the Bioremediation Facility is to reduce, through composting, the explosive contaminant levels of affected soils to below health-based remediation goals and to meet the National Contingency Plan (NCP) criteria of 90% to 99% reduction of toxicity and mobility (leachability). Pilot scale results will also be compared to risk assessment values generated for NSWC Crane. The successful pilot scale mixes shall be used to determine the full scale treatment operations.

Preliminary Remedial Goals (PRGs) developed by Region 9 (U.S. EPA, 1996a) will be used as initial cleanup level targets for the pilot scale phase. Method reporting limits for each of the target constituents are provided by Southwest Laboratory of Oklahoma. The constituents of concern and remedial goals are shown in Table 1-1.

TABLE 1-1 REMEDIAL PERFORMANCE GOALS AND ACCEPTABLE REPORTING LIMITS - Pilot Scale Study				
Parameter	**Method of Analysis**	**Soil goal-industrial limit (mg/kg) or TCLP regulatory limit**	**Soil Acceptable Reporting Limit (mg/kg)**	**Water Acceptable Reporting Limit (ug/L) (for blank analysis only)**
Explosives				
TNT	8330	30f	0.25	6.4
RDX	8330	30f	1	14.0
HMX	8330	34,000a	2.2	13.0
Tetryl	8330	6,800a	0.65	10.0
TNB	8330	34b	0.25	7.3
1,3-DNB	8330	68a, f	0.25	4.0
Nitrobenzene (NB)	8330	94a	0.26	7.0
4-Am-DNT	8330	2.8c	0.25	20
2-Am-DNT	8330	2.8c	0.25	14
2,4-DNT	8330	2.8c	0.25	5.7
2,6-DNT	8330	2.8c	0.26	9.4
2-nitrotoluene	8330	6,800d	0.25	12.0
3-nitrotoluene	8330	6,800d	0.25	7.9
4-nitrotoluene	8330	6,800d	0.25	8.0
Total Metals (site-specific)				
Barium	6010	100,000a	0.5	5
Cadmium	6010	850a	0.4	4
Chromium (total)	6010	450a	0.5	5
Lead	6010	1,000a	0.3	3

TABLE 1-1 REMEDIAL PERFORMANCE GOALS AND ACCEPTABLE REPORTING LIMITS - Pilot Scale Study				
Parameter	**Method of Analysis**	**Soil goal-industrial limit (mg/kg) or TCLP regulatory limit**	**Soil Acceptable Reporting Limit (mg/kg)**	**Water Acceptable Reporting Limit (ug/L) (for blank analysis only)**
TCLP-metals (units: mg/L)				
Arsenic	1311, 6010	5.0 mg/L	N/A	100
Barium	1311, 6010	100	N/A	5
Cadmium	1311, 6010	1.0	N/A	5
Chromium	1311, 6010	5.0	N/A	5
Lead	1311, 6010	5.0	N/A	40
Mercury	1311, 7470	0.2	N/A	1.5
Selenium	1311, 6010	1.0	N/A	100
Silver	1311, 6010	5.0	N/A	5
Volatile Organics (the following compounds were listed in Table 5-7 of the August 1992 EMR for Mine Fill A)				
Dichloro-methane (methylene chloride)	8240	18a	5	5
Acetone	8240	8,800a	10	10
Methyl ethyl ketone	8240	27,000a	10	10
Methyl isobutyl ketone	8240	2,800a	10	10
Toluene	8240	880a	5	5
Xylene (total)	8240	320a	5	5
Ethanol	8015	NV	4	2,000
Isopropanol	8015	NV	4	2,000

TABLE 1-1
REMEDIAL PERFORMANCE GOALS AND ACCEPTABLE REPORTING LIMITS
- Pilot Scale Study

Parameter	Method of Analysis	Soil goal-industrial limit (mg/kg) or TCLP regulatory limit	Soil Acceptable Reporting Limit (mg/kg)	Water Acceptable Reporting Limit (ug/L) (for blank analysis only)
Methanol	8015	100,000a	4	2,000
Naphtha	8015	nv	25	2,000
TCLP-VOCs (regulated list) units: mg/L				
Benzene	8240	0.5	N/A	5
Carbon Tetrachloride	8240	0.5	N/A	5
Chlorobenzene	8240	100.0	N/A	5
Chloroform	8240	6.0	N/A	5
1,2-Dichloroethane	8240	0.5	N/A	5
1,1-Dichloroethene	8240	0.7	N/A	5
Methyl Ethyl Ketone	8240	200.0	N/A	10
Tetrachloro-ethylene	8240	0.7	N/A	5
Tetrachloro-ethene	8240	0.5	N/A	5
Vinyl Chloride	8240	0.2	N/A	10

Notes:

1. Analytical methods listed above are SW-846 methods, unless otherwise indicated.
2. All other parameters not listed here will be reported at standard PQLs (i.e. TOC, TKN, other VOCs, other explosives, disposal parameters)
3. Parameter lists required to be reported per method per data collection task are provided in Table 1-5.
4. N/V = no value available
5. N/A = not applicable

a. Reference: EPA Region 9 Preliminary Remediation Goals, August 1, 1996
b. Value for 1,3,5-Trinitrobenzene
c. Value for dinitrotoluene mixture (see reference a).
d. Value for 2-and 3-nitrotoluene.
e. These reporting limits will be confirmed with the laboratory.
f. Target parameter presumes collection of 3 isomers and applies most conservative available industrial PRG value to non resolved isomers.

A performance goal of 30 mg/kg for TNT and RDX will be used during the pilot scale as opposed to the industrial soil PRGs of 64 mg/kg and 17 mg/kg, respectively, and the residential soil PRGs of 15 mg/kg and 4 mg/kg, respectively. This level has been applied at Comprehensive Environmental Response, Compensation, and Liability Act (CERCLA) sites to minimize the phytotoxicity effects of munitions compounds on plant species (U.S. EPA, 1996b). This criteria is especially applicable to areas which may be backfilled with treated soil and revegetated. The PRG established for soil cleanup at the Bangor facility was set at 30 mg/kg for TNT, as this level corresponded to "lifetime excess cancer risks between 10E-5 and 10E-6 under CERCLA and is protective for non-carcinogenic effects" (U.S. EPA, 1993c). Other constituents' goals have been reduced from the PRG level such as 2,4 and 2,6 DNT based on previous studies (U.S. EPA, 1996c). The rate of degradation for all constituents listed will be evaluated, and process and site specific performance goals developed for use in full scale operation using the successful pilot scale mix results.

1.2.1 Performance Goals

The site specific performance goals will be used as the primary remediation goals for the constituents of concern during the pilot scale operation, however, a secondary goal will be to provide data to evaluate the biological treatment efficiency based on the CERCLA remediation criteria for innovative treatment technologies.

The constituents of concern and performance goals are shown in Table 1-1. The performance goals are discussed in more detail in Section 1.4 of the **approved** Pilot Scale Biofacility QAPP.

The ~~National Contingency Plan (~~NCP~~)~~ Preamble indicates 90% to 99% reduction of toxicity and mobility (leachability) as a guide for effective treatment. Previous studies have indicated that reductions in parent compounds and first series intermediate compounds were providing parallel reductions in toxicity and leachability based on combined chemical, toxicology and leachability data (U.S. EPA, 1996b). Therefore, a 90% to 99% reduction in concentrations of contaminant compounds corresponds to a 90% to 99% reduction in toxicity and leachability and meets the NCP treatment performance guideline for composting of TNT, RDX, and HMX.

1.2.2 Process Goals

The process parameters and their goals essential to successful biodegradation of the explosive contaminants are listed in Table 1-2. These parameters will be measured and monitored as described in Section 8.2 of this Operational Plan. It is essential that these goals are met to provide optimal conditions for successful degradation of the explosive contaminants and, therefore, meeting the performance goals of this plan. The process parameters and their goals are discussed in more detail in Section 8.0.

TABLE 1-2 PROCESS GOALS	
Process Parameter	Operating Goal
Temperature	25 to 60 °C
Moisture	40 to 60 % (MWHC)[1]
Oxygen	5 to 20 %
[1] Denotes Maximum Water Holding Capacity	

If Contractor personnel and equipment are available during the Pilot Scale Operation, thermophilic bacteria testing shall be performed. The procedure is described in Appendix D, Field *Standard Operating Procedure (*SOP*)* 12.0 of this plan. If personnel and equipment are not available in a timely manner, or additional funding is not available, this test will be delayed until the full scale operation instead.

1.3 BACKGROUND

Mine Fill A Soil. Mine Fill A is located in the west-central portion of NSWC situated along Highway H-17 as shown in Figure 1-1. Mine Fill A consists of 29 buildings which have been used to assemble mines, depth charges, rocket heads, aerial bombs, and projectiles. Currently, Mine Fill A is used to produce 2,000-pound aerial bombs. Demilitarization activities also take place in this area. The major sources of contamination were wash down operations and the exhaust ventilation system.

Soil contaminants include TNT, RDX, and HMX. Concentrations of individual constituents in the soil ranged from nondetect to 15,300 mg/kg (RDX). TNT and HMX were reported as high as 3,790 mg/kg and 1,340 mg/kg respectively. Soil samples were collected in 1985 around Buildings 153 and 158 with the highest concentrations of contaminants detected near Building 153 (Haliburton, 1992). The sample locations are depicted in Figure 1-2 with the analytical results shown in Table 1-3. Other sampling events indicated contaminants of concern in operational waste waters which are presently collected and pretreated prior to discharge to the site wastewater treatment system.

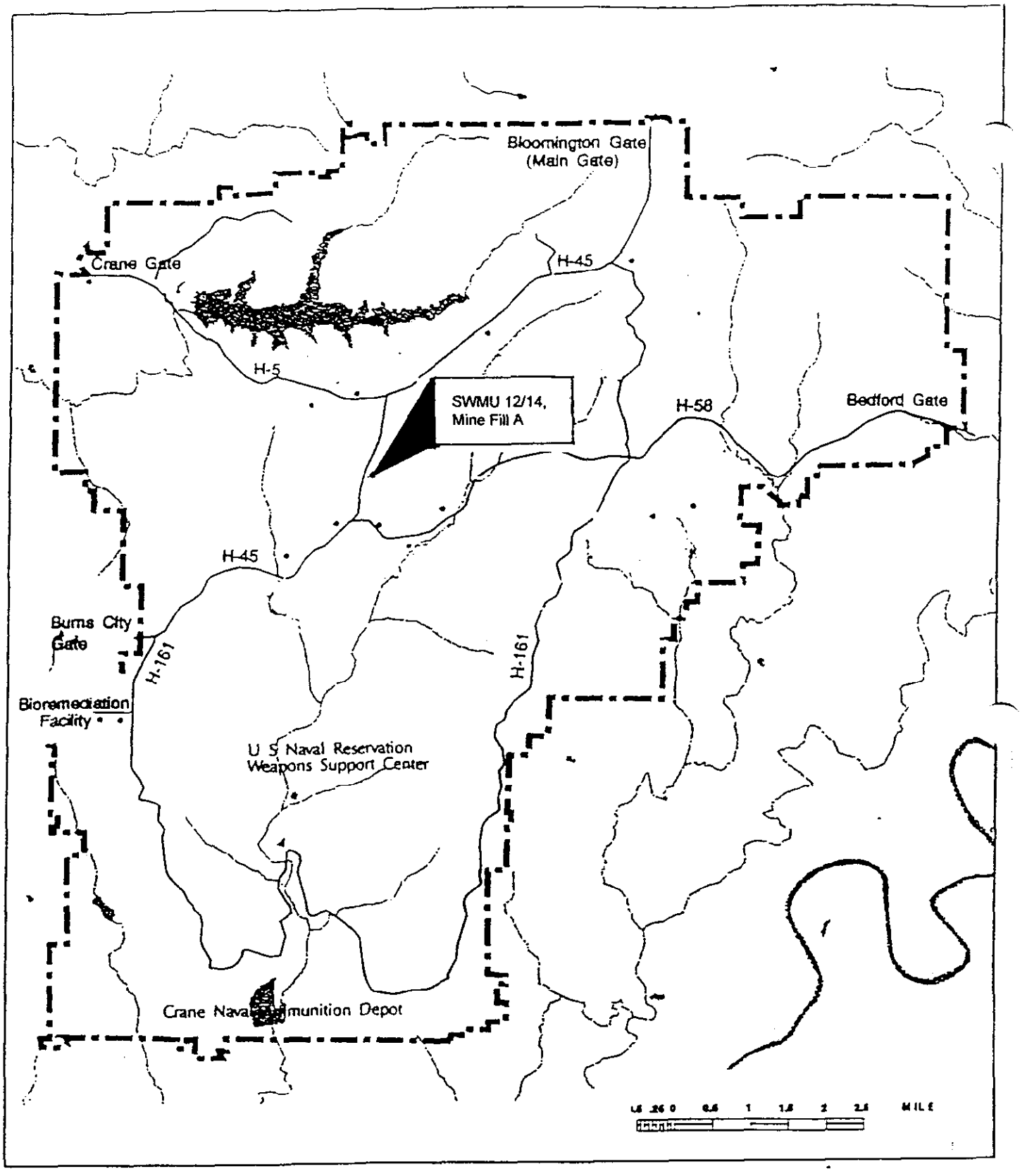

FIGURE 1-1
SWMU 12/14, MINE FILL A

TABLE 1-3 SUMMARY OF PREVIOUS SOIL BORING RESULTS - MINE FILL A			
Sample I.D./Location	**TNT (ppm)**	**HMX (ppm)**	**RDX (ppm)**
MFA-1/45 feet away from northeast corner of box bin at building 153	69	292	2,620
MFA-2/at base of berm 10 feet south of box bin	3,790	1,340	15,300
MFA-3/10 feet out from end of drain pipe	8	908	8,150
MFA-4/10 feet down ditch from MFA-3	<3.6	64	374
MFA-5/28 feet east of building 158, in ditch	64	99	906
MFA-7/two feet southeast of static pole south of building 158, in run-off ditch	<3.6	<5.0	<7.2
MFA-8/near base of berm, 15 feet west of corner of box bin	5.2	52	349

Notes:
1. Soil samples were collected from borings installed 20" below ground surface. Samples were analyzed for TNT, RDX and HMX. Reference for data and locations found on Figure 1-5 is *Final RCRA Facility Investigation Phase I, Environmental Monitoring Report, Solid Waste Management Units #19/00, #08/17, #12/14 and #13/14, Naval Surface Warfare Center, Crane Division, Crane, Indiana, Halliburton NUS (August 1992).*

Based on previous sampling data and locations, the area around Building 153 has been selected as the excavation site for the pilot scale operation. Building 158 soils will be used as an additional source in case sufficient soil is not available near Building 153. Aerial and ground photographs are provided in Appendix B for additional detail of the site.

An estimated 200 cubic yards of explosive contaminated soil will be excavated at the Mine Fill A area and transported to the Bioremediation Facility for pilot scale compost testing.

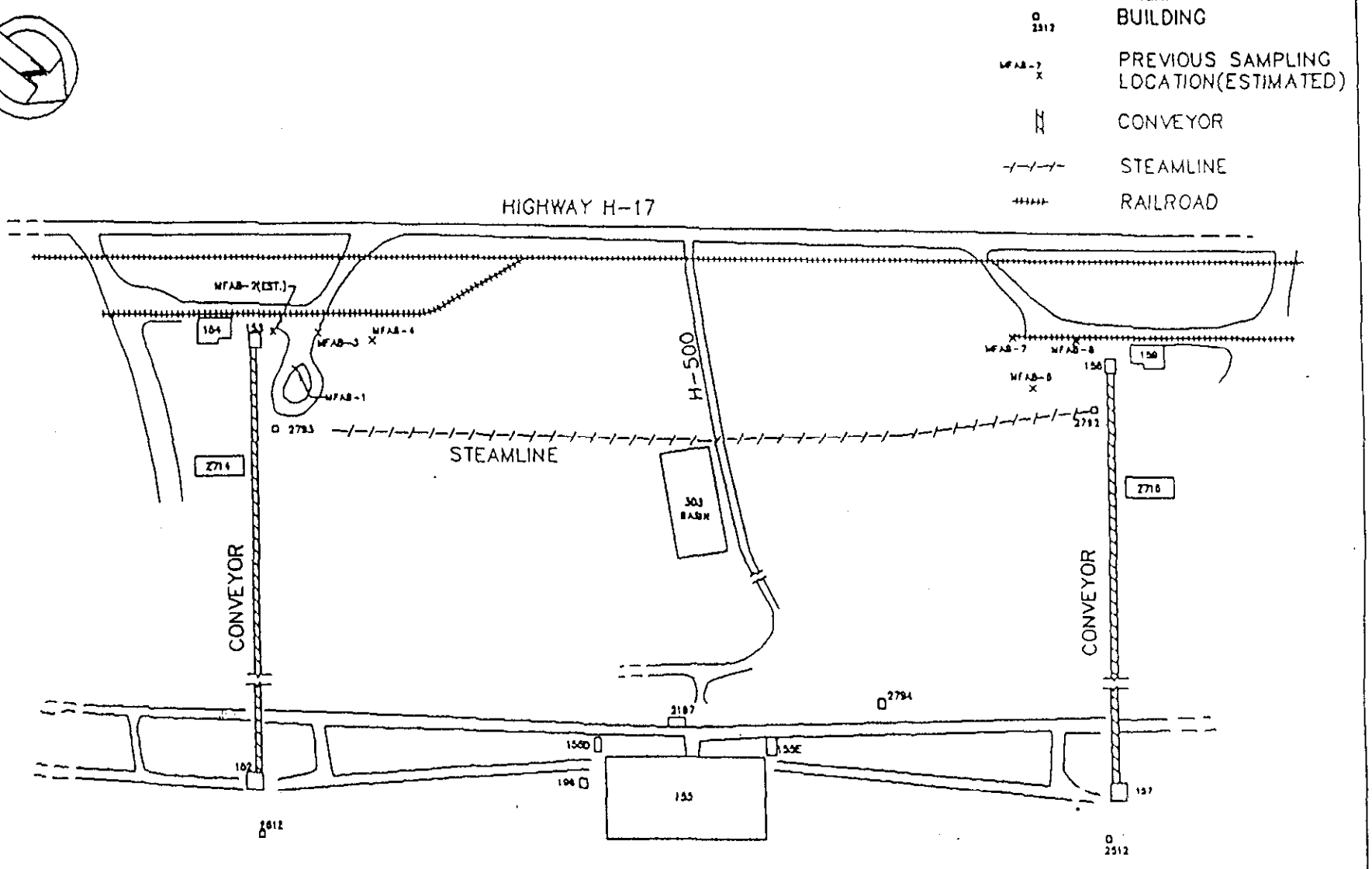

SWMU #12/14, MINE FILL A SAMPLE LOCATIONS

(NOT TO SCALE)

MORRISON KNUDSEN CORP.	
Drawing Figure 1-2	Rev
Date 10/21/96	Sh

1.4 BENCH-SCALE TREATABILITY RESULTS

Bench-scale treatability testing on soil samples from ABG and Rockeye Munitions was performed by U.S. Army Corps of Engineers Waterways Experiment Station (WES). The following information was extracted from two In-Progress Review (IPR) memorandums issued by U.S. Army Waterways Experiment Station (WES) dated May 18, 1995, (Preston, 1995a) October 3, 1995, (Preston, 1995b) respectively, and from the final draft report *Bench Compost Implementation at Naval Surface Warfare Center Crane* undated (Preston, 1996). The results of this treatability study are, in part, the basis for the recipes and process parameter control points to be used in the pilot and full scale tests.

The NSWC Crane Bench Scale Compost Testing was organized into three phases: (I) initial planning and initiation, (II) respirometric testing, and (III) adiabatic bench scale testing.

1.4.1 Phase I

The activities for this phase included the initial planning and initiation of the project, collection of soil samples from the contaminated sites, discussion of the project with regulators, and a survey of locally available agriculture products.

1.4.2 Phase II

Eight compost mixtures were selected for examination using respirometric screening techniques as a method for initial screening. The goals of the experimentation were analogous to those outlined in *Guide for Conducting Treatability Studies Under CERCLA, Interim Guidance (EPA/540/R-93/519a)* for the remedy screening study tier. In this case, however, the specific objective was to use the data to suggest two compost mixes for larger scale bench examination that would confirm remedy screening and selection. The two final mixtures were 1) swine manure and paper waste and 2) alfalfa and cow manure.

1.4.3 Phase III

The swine manure and paper waste mixture was rejected due to poor consistency and mixing difficulty. The cow manure and alfalfa mixture (Mix #7) was composted within a reactor for 35 days with analysis results as indicated in Table 1-4.

TABLE 1-4 MIX #7 BENCH-SCALE TEST RESULTS			
Contaminant	Initial Concentration (mg/kg)	15-Day Concentration (mg/kg)	35-Day Concentration (mg/kg)
HMX	4,817	NR	4,658
RDX	192.83	<10.0	0.70[1]
TNT	179.67	<2.5	1.18[1]
2A-DNT	142.67	1.75	4.22
4A-DNT	209.5	14.6	12.39

1. Estimated. Actual concentration was below the calibration limit of the analytical equipment.
2. Initial concentrations of TNB, DNB, 2,6-DNT and 2,4-DNT were all below 2.6 mg/kg. Initial concentration of tetryl was below 6.5 mg/kg.
3. Reference for data: Bench Compost Implementation at Naval Surface Warfare Center Crane.(Preston, 1996)

Other operational information included:

- Mixture - 20% soil,
  40% cow manure, and
  40% alfalfa (by volume).
- Mixing - Daily.
- Moisture - 49.0% initially,
  47.2% on day 15, and
  44.9% on day 35.
- TVS - 30.0% at day 0,
  21.8% at day 15, and
  21.1% at day 35.
- TKN - Initial Total Kjeldahl Nitrogen value was 2327 mg/kg.
- C:N Ratio - Initial Carbon to Nitrogen ratio was 35.8:1.
- pH - ~~pH was~~ 6.73 initially,
  8.74 at day 15, and
  7.78 at day 35.

Analysis indicates reductions of 99.6%, 99.3%, 97.0% and 94.1% for RDX, TNT, 2A-DNT, and 4A-DNT, respectively. Note the increase in 2A-DNT from the 15 day concentration to the 35 day concentration. This is due to the generation of daughter products during the reduction/degradation of the parent compound. The transformation of daughter products as well as the primary compounds will be monitored throughout the pilot scale process as described in Section 8.0 of this plan. Only a 159 mg/kg reduction in HMX was observed; ~~however, the pilot scale program will utilize a variety of recipes in addition to the one recommended from the bench scale tests~~.

The U.S. Navy performed some clean soil compost pile testing and a Dewars Test to evaluate other mix recipes. Based on the results of these two programs, the final mixes selected and discussed in Section 8.0 were chosen. Table 1-5 lists the Dewar Recipes Tested. The pilot scale goals are discussed in Section 1.2 and contingency plans are discussed in Section 8.2.

TABLE 1-5
DEWAR RECIPES

Mix #	Amendment	Volume %	Volume in ounces	Volume in ml
1	Cow Manure	19.00	24	710
	Straw	56.00	72	2129
	Soil	25.00	32	946
2	Chicken Manure	3.20	4	118
	Straw	71.80	92	2721
	Soil	25.00	32	946
3	POTW Sludge	25.00	32	946
	Alfalfa	25.00	32	946
	Sawdust	12.50	16	473
	Wood Chips	12.50	16	473
	Soil	25.00	32	946
4	Chicken Manure	35.00	45	1331
	Wood Chips	40.00	51	1508
	Soil	25.00	32	946
5	Cow Manure	4.50	6	170
	Chicken Manure	1.00	1	38
	Straw	69.50	89	2631
	Soil	25.00	32	946

TABLE 1-5 CONTINUED
DEWAR RECIPES

Mix #	Amendment	Volume %	Volume in ounces	Volume in ml
6	Cow Manure	25.00	32	946
	Chicken Manure	15.00	19	568
	Wood Chips	35.00	45	1325
	Soil	25.00	32	946
7	Cow Manure	12.00	15	454
	Alfalfa	7.50	10	284
	Straw	48.00	61	1817
	Wood Chips	7.50	10	284
	Soil	25.00	32	946
8	Cow Manure	25.00	32	946
	Alfalfa	25.00	32	946
	Wood Chips	25.00	32	946
	Soil	25.00	32	946
9	Turkey Manure	25.00	32	946
	Alfalfa	25.00	32	946
	Wood Chips	25.00	32	946
	Soil	25.00	32	946

TABLE 1-5 CONTINUED
DEWAR RECIPES

Mix #	Amendment	Volume %	Volume in ounces	Volume in ml
10	Cow manure	22.50	29	858
	Chicken Manure	3.25	4	118
	Potato Waste	10.75	14	414
	Alfalfa	19.25	24.5	725
	Sawdust	19.25	24.5	725
	Soil	25.00	32	946
11	Cow Manure	25.00	32	946
	Straw	15.00	19	568
	Wood Chips	35.00	45	1325
	Soil	25.00	32	946
12	Turkey Manure	25.00	32	946
	Straw	15.00	19	568
	Wood Chips	35.00	45	1325
	Soil	25.00	32	946
13	POTW Sludge	40.00	51	1514
	Wood Chips	17.50	22	662
	Sawdust	17.50	22	662
	Soil	25.00	32	946
14	Cow Manure	25.00	32	946
	Chicken Manure	15.00	19	568
	Wood Chips	35.00	45	1325
	Soil	25.00	32	946

2.0
REGULATORY COMPLIANCE

2.1 CONTAMINATED MEDIA CLASSIFICATION

On-site bio-treatment of contaminated media must comply with all relevant permitting and reporting requirements of the Resource Conservation and Recovery Act **(RCRA)** (1976 *et seq.*).

Data obtained from *in situ* samples of the Mine Fill A excavation areas indicate that the contaminated media does not contain 40 CFR 261 Appendix VIII hazardous constituents above the characteristic reactivity threshold as determined in 40 CFR 261.23. Kristoff (1987) evaluated contaminated media which contain reactive nitrated aromatics, and indicated that reactivity was not observable if the reactive constituents were present below 10 % (100,000 mg/kg) concentrations.

It is expected from in-situ soil analysis that once the soil is excavated and mixed within the truck, prior to treatment, the soil will be non-reactive and a non-hazardous waste. Upon treatment at the bioremediation facility, the hazardous constituents will be treated from the soil, and the material handled will be a contaminated media. Therefore, at treatment completion, it is anticipated that the material will be considered a soil again. If at any point during the remediation activity the generation of hazardous waste is anticipated, the activities will stop in that area being excavated and permits will be sought for the treatment of hazardous waste.

Based on this classification of the soil to be treated, the Bioremediation Facility and buildings have been designed and approved as a solid waste and contaminated media treatment facility meeting the applicable codes and standards.

2.2 STORM WATER DISCHARGE

The NSWC Crane personnel have obtained a storm water discharge permit, (NSWC, 1997) under 327 IAC 15; **National Pollution Discharge Elimination System (NPDES)** General Permit Rule Program, which amends the existing permit to include discharge levels for the Bioremediation Facility storm water collection system. MK will conduct operations in compliance with the permit specifications. The storm water diversion and retention controls for the Bioremediation Facility are described in Sections 5.6 and 7.3.3 of this plan. Additional details on sampling procedures and analytical methodologies for storm water discharge are provided in the Pilot Scale Biofacility QAPP, Section 4.3.

2.3 LANDFILL PERMITTING

An application for a Minor Modification to the existing landfill permit will be submitted by NSWC Crane personnel to **the Indiana Department of Environmental Management** (IDEM). This modification is required to obtain approval for using finished compost material as a landfill daily cover material. Analytical data from the successful pilot scale testing will provide the necessary data for these permits.

Any pile that fails to meet the performance goals will be retreated until the performance goals are met, prior to any application as a daily cover material. Successfully treated piles will be stored in the bioremediation facility buildings until the State landfill permitting is approved.

2.4 EXCAVATION PERMITTING

An Excavation and Trenching Permit is required for soil excavation in the Mine Fill A area and will include a statement of clearance for safe access based on the removal or absence of unexploded ordnance in the work zone. This permit will be obtained from the Public Works Officer and is valid for thirty days. Additional details on excavation permitting is provided in Section 6.2 of this plan.

2.5 SPECIFICATIONS, CODES, AND STANDARDS

Compliance in the design, material, examination, testing, inspection, certification, and documentation shall include, but not be limited to, the applicable portions of the specifications, codes, and standards listed below. References to codes, specifications, and standards shall be to the latest edition, complete with all addenda and revisions applicable on the date of the construction specification and approval of the Operational Plan and QAPP.

- U.S. Navy or NSWC Crane guidance
- U.S. Occupational Safety and Health Administration

  29 CFR 1910, Occupational Safety and Health Standards

  29 CFR 1926, Safety and Health Regulations for Construction
- U.S. Army Corps of Engineers

  EM-385-1-1, Safety and Health Manual

- U.S. Environmental Protection Agency

  40 CFR 257, Criteria for Classification of Solid Waste Disposal Facilities and Practices

  40 CFR 261, Identification and Listing of Hazardous Waste

  40 CFR 262, Standards Applicable To Generators Of Hazardous Waste

  40 CFR 264, Subpart S Corrective Action

  40 CFR 300, National Oil and Hazardous Substance Contingency Plan

- U. S. Department of Transportation

  49 CFR 172, Hazardous Materials Table, Special Provisions, Hazardous Materials Communications, Emergency Response Information, and Training Requirements. This part describes requirements for completing shipping papers; marking, labeling, and placarding; training; and emergency response.

  49 CFR 173, General Requirements for Shipments and Packaging. This part describes classification and packaging of hazardous materials.

- Indiana Department of Environmental Management

  327 IAC 15, NPDES General Permit Rule Program

  329 IAC 2, Solid Waste Management

  329 IAC 3.1, Hazardous Waste Management Permit Program And Related Hazardous Waste Management.

- Department of Defense Environmental Safety Board explosive safety standard for construction equipment.

3.0
PROJECT ORGANIZATION

The project team organization for this remedial action is shown in Figure 3-1. The responsibilities of each team member are listed in Table 3-1.

The team is structured to provide the necessary operations personnel and scientific oversight in the execution of this work.

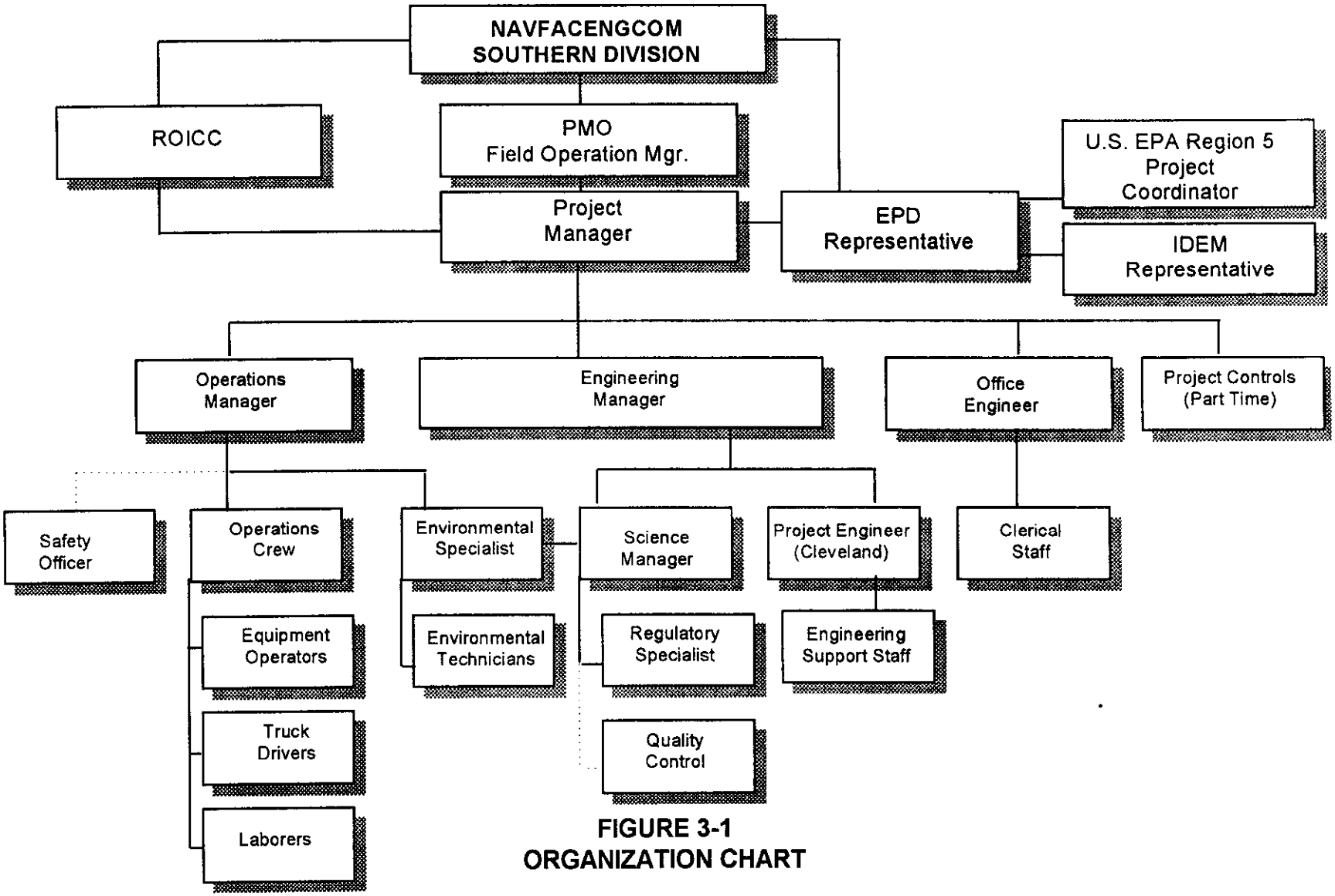

FIGURE 3-1
ORGANIZATION CHART

TABLE 3-1 PROJECT RESPONSIBILITIES	
TEAM MEMBERS	**RESPONSIBILITIES**
NAVFACENGCOM Southern Division Restoration Project Manager (RPM)	Overview of project execution and coordination between Contractor, NSWC Crane, U.S. EPA, and other agencies.
Program Management Office (PMO)	Overall responsibility for all cleanup measures at all sites in the Southern Division of the Naval Facilities Engineering Command under Contract No. N62467-93-D-1106. The PMO is the point of contact for Southern Division.
U.S. EPA Region 5 **RCRA** Project Coordinator (RPC)	Responsible for overview of all site activities to assure compliance with RCRA. RPC shall review and approve all phases of remedial activities including work plans, construction design, equipment, analytical results, etc..
NSWC Environmental Protection Department (EPD) Environmental Construction Representative (ECR)	Responsible for monitoring contractor performance for compliance with RCRA, the RCRA Corrective Action Part B Permit, and other environmental regulations as they apply to the approved Interim Measures Work Plans. In absence of NTR and in an environmental emergency, the ECR shall provide direction to Contractor and provide notification to appropriate parties.
NSWC Resident Officer In Charge of Construction (ROICC)	Southern Division's on-site representative and is the liaison between NSWC officials, the U.S. EPA, and the Project Manager for the SWMUs at NSWC Crane.
Project Manager (PM)	Reports to the Field Operations Manager from the PMO. Overall responsibility for implementing this Operational Plan and all other project activities. The PM will control all on-site forces to ensure completion of project tasks. • Single point of contact for U.S. Navy and U.S. EPA liaison. • Coordinates the project resources to ensure compliance with the appropriate plans, procedures, and regulatory requirements. • Oversees all personnel on-site and coordinates with the PMO. • Overall responsibility for cost, schedule control, safety, and quality.
Site Superintendent - Operations Manager (OM)	Reports to the PM and has primary responsibility for the coordination and control of all field activities to ensure that all tasks included in this Operational Plan are completed. • Coordinates the activities of all field operations personnel. • Provides daily reports to the PM on the status of field operation activities. • Responsible for equipment maintenance, procurement of amendments, and miscellaneous equipment rental. • Primary responsibility for production of the Bioremediation Facility and direct supervision of operators, drivers, laborers, and the ES.
Engineering Manager (EM)	Reports to the PM and has primary responsibility for finalizing the operations plans, provides construction support, and oversight of engineering and scientific activities. • Acts as the MK representative at the RAB presentations, • Acts as the MK site communications officer, • Provides technical direction to the engineering and science staff, • Provides oversight and coordination of the preparation of technical documents.

TABLE 3-1 PROJECT RESPONSIBILITIES	
TEAM MEMBERS	**RESPONSIBILITIES**
Science Manager (SM)	Reports to the EM and has primary responsibility for oversight of the science activities on site including regulatory support, data collection and analysis, and data reporting. • Provides scientific analysis of data, • Provides technical direction to the ES and Technicians, • Provides technical direction to the OM.
Regulatory Specialist (RS)	**Reports to Science Manager with primary responsibility to determine regulatory requirements and establish methods for Contractor compliance with Navy EPD requirements.** **- Review regulations for applicability to project,** **- Review project modifications for applicable regulations**
Environmental Specialist (ES)	Reports to the OM and will receive technical direction from the SM. Specific responsibilities include: • Supervises the activities of the technical staff relative to data collection, sampling, and process control. • Coordinates with the Site Superintendent to ensure that activities are properly coordinated for facility operation. • Coordinates the activities of the support staff and provides project status reports to the SM. • Maintains project records of all monitoring and analysis and prepares technical reports presenting the results of the monitoring, analysis, and facility operational performance. • Responsible for sample collection, field screening analysis, and preparation of samples for shipment.
Project Controls	Reports to the PM with primary responsibilities of tracking of all cost and scheduling for the NSWC Crane Project. • Responsible for cost collection and reporting • Responsible for schedule development, maintenance, and reporting.
Project Engineer (PE) (Cleveland)	Reports to the EM with primary responsibilities of coordinating the engineering effort in support of field activities. • Assign Cleveland based resources as required for the completion of all project plans and documents. • Provide engineering support for field activities as required.
Engineering Support Staff	**Technical staff reporting to the Project Engineer with specific task responsibilities as necessary to allow the Project Engineer to fulfill his responsibilities.**

TABLE 3-1 PROJECT RESPONSIBILITIES	
TEAM MEMBERS	**RESPONSIBILITIES**
Site Safety and Health Officer (SSHO)	Reports to the PMO with field reporting to the OM. Implements and ensures compliance with the Task-Specific Site Safety and Health Plan (SSHP). Tracks and reports on safety-related matters. • Responsible for the control and elimination of existing and potential industrial hazards. • Implements and executes personnel surveillance program to ensure proper monitoring of internal and external exposures. • Provides site-specific training to personnel as required by the SSHP. • Tracks all personnel training requirements for heavy and light equipment operation, survey data, certifications, and records to ensure compliance with plans and regulations. • Assists in developing and implementing the SSHP. • Conducts audits as appropriate to ensure compliance. • Reviews and approves work permits for appropriate industrial hygiene and safety controls. • Provides monitoring to ensure the protection of project personnel, the public, and the environment. • Maintains an inventory of industrial hygiene and safety supplies as appropriate. • Maintains monitoring equipment and calibration records. • Stops work when necessary to ensure the safety of personnel and to prevent damage to the environment. • Collects air quality samples, records results, and prepares monitoring reports presenting the air quality results to the U.S. Navy.
Site Quality Control Officer (SQCO)	Reports to the PMO and with field reporting to the SM. The SQCO has primary responsibility for verifying a consistently high level of quality for the project. • Reviews and checks all documents, reports, and testing results. • Coordinates with the PM, ES, and OM on all facility operations. • Provides surveillance of all field operation activities to ensure compliance with this Operational Plan and the QAPP and completes Field Inspection Checklists. • Keeps minutes of the periodic quality meetings. • Implements the three phases of quality control by conducting preparatory meetings prior to beginning a new feature of work, performing surveillance and audits during the implementation phase and finally performing follow-up inspections to verify work was completed in accordance with all associated plans and procedures. • Ensures tracking and resolution of nonconformance/rework items.
Office Engineer	Reports to the PM with primary responsibilities to support all subcontract administration for the project. • Iniciates change orders and change order negotiations, • order and expedite all field purchased items.
Secretary	Reports to Office Engineer and is responsible for receiving in-coming telephone calls and correspondence, maintaining project files, and general clerical duties.

TABLE 3-1 PROJECT RESPONSIBILITIES	
TEAM MEMBERS	**RESPONSIBILITIES**
Environmental Technician	Reports to the Environmental Specialist and is responsible for assisting the ES in the collection of samples and data. • Assists in maintaining project records of all monitoring and analysis and prepares technical reports presenting the results of the monitoring, analysis, and facility operational performance. • Responsible for data and sample collection, field screening analysis, and preparation of samples for shipment. • Operates process instrumentation such as temperature/oxygen probe and data logger, pH analyzer, etc.. • Performs calculations for moisture content analysis, volume and weight conversions, averages, and standard deviations.
Backhoe Operator	Reports to the OM and is responsible for operation of the backhoe/loader for excavation of contaminated material to be processed, placement of backfill, and on occasion will operate the windrow turner and tractor/loader.
Center-Pivot Loader/Tractor/ Skid Steer Loader/**Screener** Operators	Reports to the OM and is responsible for operation of the center-pivot loader, farm tractor and the skid steer loader for; • Loading operations of the amendment grinder-mixer, • Cleanup and windrow forming during loading and windrow turning operations, • Assist in loading finished compost into the live-bottom trailers, • Operate the windrow turner machine as required. • Loading operations of the amendment grinder-mixer. **- Operate excavation site soil screener.**
Truck Driver	Reports to the OM and is responsible for operating the tractor/trailer rigs to deliver contaminated soil to the Bioremediation Facility and deliver finished compost material to the NSWC landfill.
Laborers	Reports to the OM or the designated operator/foreman and is responsible for; • Decontamination of equipment at the excavation site. • Segregation of reject materials from screener, i.e., rocks, metal, wood, etc.. • Operation of the vehicle decontamination facility at the Biofacility. • General site cleanup and maintenance of Biofacility area, sumps, and ponds.
Note: See Section 3.0 of the Task-Specific Site Safety and Health Plan for names and contact.	

4.0
SCHEDULE

Figure 4-1 shows the proposed schedule for loading multiple piles for the various mixtures to be processed during the pilot scale operation. The quantities and time periods may be altered slightly during the pilot phase based on the optimization of amendment selections and mixture ratios. The schedule is presented with activity bars which will show progress once the program begins. The schedule also shows a target bar for establishing the original schedule target milestones. This allows for progress against the original target dates to be observed at a glance.

The total length of time anticipated for the pilot scale test clean soil composting is for 30 days, and contaminated soil composting is for 60 days after that. If a contaminated soil pile reaches all the performance goals before that date, the pile may be considered successful in a shorter time period.

5.0
BIOREMEDIATION FACILITY DESCRIPTION

The following descriptions are supported by design drawings and technical specifications provided in the approved Bioremediation Facility Interim Measures (IM) Work Plan and Task-Specific SSHP.

The Bioremediation Facility is shown on drawing G-100, located in Appendix C, and consists of the following basic design elements:

- Three 70 feet wide by 300 feet long compost buildings,
- Amendment storage area,
- Amendment haul road area,
- Equipment and personnel decontamination areas,
- Office and laboratory trailer area,
- Storm water diversion and retention controls, and
- Basic services and utilities including a water supply source for dust suppression and compost moisture additions.

5.1 COMPOST BUILDING AREA

The Compost Building Area is located in the south central and western portions of the Bioremediation Facility as shown on drawing G-100 of Appendix C and as amended in the approved plans. The compost structures consist of a metal structural frame with a light-weight roof designed to accommodate both local climatological conditions and the height of equipment selected for composting operations. The compost building side walls are constructed of six-inch thick concrete to a height of four feet with metal siding extending to the roof line. The entrance/exit ends of the buildings are open with six-inch high entrance/exit ramps to prevent run-on or run-off conditions. The floors of the compost structures are concrete designed to slope to an epoxy coated fluid collection sump. Each compost building is provided with a one and one-half inch underground water line and an emergency eye wash station. Ventilation is provided for each compost building.

The area surrounding the compost buildings is provided with asphalt paving coated with an approved sealant to prevent contaminant migration. The outer perimeter of the paved surface has a six-inch high asphalt curb for run-on and run-off control. The compost building area paved surface slopes to the southwestern edge of this area where a storm water storage/retention pond is located.

5.2 AMENDMENT STORAGE AREA

The amendment storage area is located in the southeast section of the Bioremediation Facility as shown on drawing G-100 in Appendix C, and is used to store bulking agents and manure amendments. The amendment storage/work area is surfaced with asphalt paving and coated with an approved sealant to prevent contaminant migration. The outer perimeter of the paved surface has a six-inch high asphalt curb for run-on and run-off control. The amendment storage/work area paved surface slopes to the southern edge of this area where a second storm water storage/retention pond is located. **If amendments are showing signs of being too fluid, caulking or other material will be placed below the blocks to act as a water stop and to minimize water run-off from one section to another. No POTW sludge shall be stored at the amendment storage area.**

The amendment storage area has multiple temporary bins for storing the amendment materials used in the composting operation. The bin side walls are constructed of precast concrete interlocking blocks which can be adjusted as required to accommodate different storage configurations. **All stockpiles are to be covered for protection from wind and rain. The covers are to be placed in a manner that directs clean storm water away from the storage area. The covers are to be made of reinforced plastic of sufficient strength (10 to 20 mil plastic) to withstand typical weather conditions and frequent handling. The covers are to be held in position with a sufficient number of sand bags to keep them in place during a strong wind. Efforts will be made to avoid puncturing the covers when placing the sand bags. The stockpiles will be covered at the end of every day.**

A 500-gallon capacity diesel fuel storage tank and containment pad is located on the north central edge of the amendment storage/work area. The containment pad is cast concrete with eight-inch CMU block walls two courses high, coated with an epoxy paint and provided with a two-inch drain pipe and a lockable valve for storm water discharge. **The fuel dispenser also has a locking device.**

5.3 AMENDMENT HAUL ROAD AREA

The amendment haul road area is located in the southeast portion of the Bioremediation Facility as shown on drawing G-100 in Appendix C. The amendment haul road is constructed of compacted limestone. Drainage swales on both sides of the haul road and corrugated steel culverts at each end of the haul road maintain proper drainage.

5.4 EQUIPMENT AND PERSONNEL DECONTAMINATION AREA

An equipment decontamination facility is constructed for cleaning trucks and equipment that have come into contact with contaminated soil within the Bioremediation Facility. Trucks and equipment will be cleaned using a high-pressure, low volume water spray system. After washing, the equipment will be visually inspected, and recleaned if necessary, until no visual signs of residual soil remain. The equipment decontamination area consist of a vehicle wash area, a 4,000-gallon capacity epoxy coated fluid collection and storage sump, a toilet facility, and equipment room. **A boot**

wash is located on the east side of the truck wash to allow personnel to cleanse their boots prior to moving to the trailers. All decontamination fluids collected in the sump will be containerized and used for initial compost moisture adjustment or sampled for disposal requirements. The sanitary sewer line from the toilet room is routed to a pump/lift station in the office/laboratory area.

The personnel decontamination area consists of a shower/locker room trailer with change room area, lockers, lavatory, toilets and showers. ~~*The northern end of the trailer serves as a lunch/conference room*~~. The sanitary sewer line is routed to the pump/lift station in the office/laboratory area.

5.5 OFFICE AND LABORATORY TRAILER AREA

The office and on-site laboratory trailers are located north of the compost building area as shown on drawing G-100 in Appendix C. They are provided with a compacted limestone parking area with parking logs for 24 vehicle capacity. Sanitary sewer service is provided by way of a grinder pump/lift station as specified in the technical specifications and drawings. The existing roadside drainage swales are regraded to obtain proper drainage.

The on-site laboratory trailer contains the necessary equipment and supplies to support the process monitoring requirements as described in Section 8.0.

5.6 STORM WATER DIVERSION AND RETENTION CONTROLS

The facility utilizes both the existing topography and site drainage controls to control storm water run-off and run-on as shown on drawing G-100 in Appendix C. Two lined storm water retention basins sized to store rainfall from a 10-year, 24-hour storm are constructed inside the Bioremediation Facility. **The discharge pipes for both ponds are controlled with a locking device.** They allow for controlled on-site storm water storage/retention and off-site storm water discharge. Water collected in the retention basin will be sampled following a storm to determine whether the water meets off-site discharge requirements. Water not meeting off-site discharge requirements will either be recycled in the soil treatment area for initial compost moisture adjustment or transported to one of the water treatment facilities located at Mine Fill A and Rockeye. Enough retention capacity will be maintained to allow for unexpected rainfall events. Evaporation will be the preferred method of decreasing retention pond volumes, but analyses of retained water shall be kept current so that water may be discharged when needed. An NPDES discharge permit modification (NSWC, 1997) has been obtained for discharge to the local drainage swales and discharge into the water treatment facilities.

6.0
PILOT SCALE OPERATION

Pilot scale tests shall be performed prior to full scale operations, which is dependant upon successful pilot scale test results. It is planned that the pilot-scale tests will examine variations in compost mix by using ~~eight~~ **seven** separate, short windrows of approximately 60 cubic yards each (20 to 25 feet long). One pilot scale test mix design is based on the final results of the bench scale studies. Other amendment mixes will be partially derived from previous successful operations of composting explosive contaminated soil. **The U.S.Navy and the U.S. EPA will meet after the clean soil portion of the test is complete and decide on the final selection of mixes, based on the clean soil results, that will be used in the contaminated soil portion of the test.** One pilot scale test mix design is based on the final results of the bench scale studies. Other amendment mixes will be partially derived from previous successful operations of composting explosive contaminated soil.

The pilot scale test treating explosive contaminated soils shall last 60 days. If a pile meets the performance goals, the U.S. Navy, in coordination with the U.S. EPA, may decide to end the treatment process sooner for that particular successful pile. Prior to pilot scale testing with explosives contaminated soil, all operations and mix designs will first be tested using clean soil from the on-site borrow source **for a 30 day test period**. All activities will be performed simulating a contaminated soil operation with the exception of the laboratory analysis and some of the excavation site activities. In addition to testing the basic batch design parameters and scale-up factors, the pilot scale test will allow operations to field-check many of the procedures presented in this Operational Plan prior to any full scale operations. The pilot test will be used to check material handling methods, windrow formation, and other operating procedures, in preparation, for the full scale operation. The proposed site-specific process goals as well as the NCP treatment efficiency goals are discussed in Section 1.2 of this plan. If the pilot scale tests fail and no mix meets the performance goals, the U.S. EPA Region 5 **RCRA Project** Coordinator shall be notified and new bench scale testing will be required.

The Bioremediation Facility operation process flows are illustrated on drawings 4324-0009-01-A, -B, and -C in Appendix C. Drawing 01-A illustrates the main composting processes while drawings 01-B and 01-C illustrate wastewater disposition and excavation site processes, respectively.

The pilot scale composting operation consists of eight major steps to be performed for each windrow. The sequence of steps is listed below and is described in detail in the following subsections.

1. Receive and store amendments.
2. Load amendments into grinder/mixer.
3. Load amendment blend into windrow.

4. Excavate, screen, and transport soil to Biofacility.

5. Load soil received from excavation into windrow.

6. Add moisture (if necessary) and turn/mix windrow.

7. Continue daily turning and monitoring of parameters until treatment goals are met.

8. Unload windrow and transport soil/compost to the interim storage building at the Bioremediation Facility.

6.1 RECIPE SELECTION

The mixes for use in the pilot-scale testing are made up of 25 percent soil and a combination of amendments consisting of cow manure, chicken manure, **turkey manure,** POTW sludge, alfalfa, and potato sludge, and bulking materials consisting of straw, ~~corn stalks~~, sawdust, and wood chips. **The final recipe selection is based on results from the Dewar Testing.** Recipe percentages are specified by volume and are listed in Table 6-1 **and Table 6-1a**.

The amendment/soil quantities will vary depending on the recipe; however, the volume ratios of soil to amendments will be maintained. ~~Recipe #6 simulates the Army Engineering Waterways Experiment Station~~ **WES** ~~bench scale mix of 20% soil, 40% alfalfa, and 40% cattle manure, except adjusted to a 25% soil loading. The WES bench scale cattle manure contained 50% straw bedding and 50% pure manure; therefore, the total of recipe #6 cow manure and straw is equivalent to the adjusted volume of 37.5 %. Recipe #8 simulates the Umatilla Depot Activity (UMDA) composting mix of 30% soil, 18% sawdust, 18% alfalfa, 21% cattle manure, 3% chicken manure and 10% potato waste, except adjusted to a 25% soil loading.~~ Final **Mix 1 ~~(shown above)~~ is the same as Dewar Recipe Mix 3 (refer to the end of Section 1 of this plan). Final Mix 2 ~~(shown above)~~ is the same as Dewar Recipe Mix 4. Final Mix 3 ~~(shown above)~~ is the same as Dewar Recipe Mix 9. Final Mix 4 ~~(shown above)~~ is the same as Dewar Recipe Mix 10, which simulates the successful recipe from the Umatilla Army Depot (UMAD) pilot and full scale test results. Final Mix 5 ~~(shown above)~~ is the same as Final Mix 4 accept the type of manure is changed, in order to see if turkey performs better than the cow and chicken mix. Final Mix 6 ~~(shown above)~~ is similar to Final Mix 5, but the ratio of alfalfa is reduced and the ratio of potato waste is increased to try and see if cost savings of the amendment types will affect the performance or not, also the sawdust is cut in half and wood chips added to add more aeration potential and reduce cost. These final mixes were selected in coordination of both the U.S. Navy and the U.S. EPA. The resulting disposal of "treated soil" from the Final Mix 1 will need to be coordinated between the U.S. Navy, the U.S. EPA, and the IDEM, since the POTW sludge is currently being land treated on-site through a State approved permit.**

~~TABLE 6-1~~ DELETED AND REPLACED ~~PILOT SCALE WINDROW RECIPES~~					
Blend	Ingredient	Volume	Blend	Ingredient	Volume
~~#1~~	~~Cow Manure~~	~~19%~~	~~#2~~	~~Chicken Manure~~	~~3%~~
	~~Straw~~	~~56%~~		~~Straw~~	~~72%~~
	~~Soil~~	~~25%~~		~~Soil~~	~~25%~~
~~#3~~	~~POTW Sludge~~	~~25%~~	~~#4~~	~~Cow Manure~~	~~25%~~
	~~Alfalfa~~	~~25%~~		~~Chicken Manure~~	~~15%~~
	~~Wood Chips/Sawdust~~	~~25%~~		~~Wood Chips~~	~~35%~~
	~~Soil~~	~~25%~~		~~Soil~~	~~25%~~
~~#5~~	~~Cow Manure~~	~~5%~~	~~#6~~	~~Cow Manure~~	~~18.5%~~
	~~Chicken Manure~~	~~1%~~		~~Alfalfa~~	~~37.5%~~
	~~Straw~~	~~69%~~		~~Straw~~	~~19%~~
	~~Soil~~	~~25%~~		~~Soil~~	~~25%~~
~~#7~~			~~#8~~	~~Chicken Manure~~	~~3.5%~~
	~~Cow Manure~~	~~5%~~		~~Cow Manure~~	~~23%~~
	~~Straw~~	~~60%~~		~~Potato Waste~~	~~10.5%~~
	~~Alfalfa~~	~~5%~~		~~Alfalfa~~	~~19%~~
	~~Wood Chips~~	~~5%~~		~~Sawdust~~	~~19%~~
	~~Soil~~	~~25%~~		~~Soil~~	~~25%~~

~~1. Assumes 0% Nitrogen or Carbon content in soil.~~
~~2. Manures contain no "bedding" (straw)~~

TABLE 6-1
FINAL PILOT SCALE WINDROW RECIPES

Blend	Ingredient	Volume	Blend	Ingredient	Volume
#1	POTW Sludge	25.00 %	#2	Chicken Manure	35.00 %
	Alfalfa	25.00 %		Wood Chips	40.00 %
	Sawdust	12.50 %		Soil	25.00 %
	Wood Chips	12.50 %		---	---
	Soil	25.00 %		---I	—
#3	Turkey Manure	25.00 %	#4	Cow Manure	22.50 %
	Alfalfa	25.00 %		Chicken Manure	3.25 %
	Wood Chips	25.00 %		Potato Waste	10.75 %
	Soil	25.00 %		Alfalfa	19.25 %
	—	---		Sawdust	19.25 %
	—	---		Soil	25.00 %
#5	Turkey Manure	25.75 %	#6	Turkey Manure	25.00 %
	Potato Waste	10.75 %		Potato Waste	15.00 %
	Alfalfa	19.25 %		Alfalfa	15.00 %
	Sawdust	19.25 %		Sawdust	10.00 %
	Soil	25.00 %		Wood Chips	10.00 %
	—	---		Soil	25.00 %

1. Assumes 0% Nitrogen or Carbon content in soil.
2. Manures contain no "bedding" (straw) and a maximum of 1% other natural materials such as feathers.

TABLE 6-1 a FINAL PILOT SCALE WINDROW RECIPES (continued) THE SUCCESSFUL CLEAN SOIL TEST FROM THESE THREE MIXES WILL GO ON TO CONTAMINATED SOIL TESTING					
Blend	Ingredient	Volume	Blend	Ingredient	Volume
#7A	Chicken Manure	3.20 %	#7B	Chicken Manure	15.00 %
	Straw	71.80 %		Straw	60.00 %
	Soil	25.00 %		Soil	25.00 %
#7C	Chicken Manure	10.00 %			
	Potato Waste	10.00 %			
	Straw	55.00 %			
	Soil	25.00 %			

1. Assumes 0% Nitrogen or Carbon content in soil.
2. Manures contain no "bedding" (straw) and a maximum of 1% other natural materials such as feathers.

Mix 1 containing the POTW sludge will begin treatment on Day 15 of the clean soil test period. This will give the U.S. Navy the opportunity to meet the solids content limits established in this plan. The U.S. Navy shall either complete 15 or 30 days of testing this mix on clean soil. This may extent the period of time between the clean and contaminated soil testing periods.

Mix 7A (the same ratio as Dewar Test Mix 2) is based on performance during a previous clean soil test performed by the U.S. Navy. Mix 7A will not be tested during the clean soil portion of this test. Results from the previous test shall be used for the final Mix 7 selected for the contaminated soil portion of the test. Mix 7B increases the chicken percentage to try and obtain better degradation results than the Dewar Test results. Mix 7C adds potato waste as a needed nutrient source and brings in characteristics of the Umatilla work. Straw is being used instead of alfalfa and wood chips to see if costs can be reduced. The consistency of the potato waste will need to be carefully watched since sawdust is not being used as an absorbent. Straw is being relied on for that function also. Mixes 7B and 7C shall be tried in the clean soil portion of the test. The results of Mixes 7A, B, and C will be compared for the best performance and the final Mix 7 for contaminated soil will be selected from the group, with confirmation from the U.S. Navy and the U.S. EPA that any of those mixes can continue into the second phase.

Prior to any contaminated soil testing, all equipment will be varied for compliance with the Hazardous Analysis recommendations to make sure there are no potential explosives hazards prior to handling of explosive contaminated soil.

Each of the amendments serves a specific purpose (Foster Wheeler, 1996):

> **Potato waste provides a source of carbohydrates and is the primary food source for the microbes;**
>
> **Manure is a source of nutrients and organic material, which can compliment the potato waste.**
>
> **Wood chips, sawdust, and straw are primarily added for bulk and absorption, to ensure the porosity/permeability of the soil to increase oxygen flow through the pile.**
>
> **The "food value" for most microbes is low; and the alfalfa adds some nutrients and, like the wood chips, is primarily used for bulk.**

A spreadsheet chart **using the final recipes** has been developed and will be maintained by the Project Manager in the field office at NSWC Crane. The spreadsheet and its use are described in Field SOP 4.0 in Appendix D. Input to the spreadsheet will be made based on carbon and nitrogen content of the raw materials received, which may vary from shipment to shipment. By updating the spreadsheet as each mix is produced, the estimated carbon to nitrogen ratio, mix density, and mix unit cost in dollars per cubic yard can be readily calculated.

The performance goals and process goals will be monitored for successful achievement as discussed in Section 1.2. Selected mixes which exhibit rapid initial degradation of explosives, i.e., greater than 50% in ten days, may be considered for testing with a 30% soil loading at a later date**, as agreed upon by the U.S. Navy and the U.S. EPA**. Upon completion of the initial pilot scale test, the successful mixes meeting the performance goals may be tested at a 30% soil loading at a later date in a second pilot test or during the full scale operation.

6.2 SOIL EXCAVATION, SCREENING, AND SITE RESTORATION

The first phase of the pilot scale test will utilize clean soil from the **approved** NSWC on-site borrow area. Clean soil will be excavated, screened, and transported to the Bioremediation Facility simulating a contaminated soil operation. However, in order to be cost effective, a complete Soil Excavation Plan has not been developed for the clean soil excavation activities.

Prior to initiating any excavating at Mine Fill A, an Excavation and Trenching Permit will be required and will include a statement of clearance for safe access based on the removal or absence of unexploded ordnance in the work zone. The PM will be responsible for obtaining this permit through the Public Works Department, Building 2516. Prior to mobilization of excavation equipment, all areas of excavation, work

configuration, the Exclusion Zone (EZ), Contamination Reduction Zone (CRZ), Support Zone (SZ), soil screener location, stockpile area, etc. shall be established in the field and clearly identified as described in the Soils Excavation Plan (Appendix E).

6.2.1 Soil Excavation

Soil excavation will begin at SWMU #12/14, Mine Fill A, and be performed by a backhoe/loader and a steer skid loader (Bobcat) as described in the Soils Excavation Plan in Appendix E. The areas of excavation are depicted in Figure 6-1, near Buildings 153 and 158. Previous analytical results indicate high levels of TNT and RDX near the vehicle turnaround area north of Building 153 as discussed in Section 1.3 of this plan. A second area west of Building 158 has been identified as an additional contaminated soil source to insure excavation of ***up to*** 200 cubic yards of soil for the pilot scale operation.

Analytical results show elevated levels of TNT and RDX in the area west of Building 158. Additional details are provided in Appendix B, Photographs, and Appendix E, Soils Excavation Plan drawings. In areas of shallow bedrock, excavation will stop upon bedrock contact.

Areas under excavation will be identified and barricaded for personnel protection as described in the SSHP (Appendix A). **Upon completion of each day's excavation, the** ~~The~~ area will be sampled and backfilled to avoid leaving open excavations, during periods of predicted precipitation. During daily operations, open excavations will be covered during periods of precipitation to prevent contact waters from forming. The areas of excavation will be identified based on analytical results from explosives testing, as described in Section 9.3.

6.2.2 Soil Screening

Contaminated soil will be screened at the excavation site to remove oversized material (1½" or larger) from the soil prior to transport to the Bioremediation Facility for pilot scale composting. The excavated soil will be loaded into the soil screening equipment using the backhoe/loader. The screening will be performed using a screen with a minimum 50 ton/hr capacity. The screen will be a standard design, portable, road legal for towing, self-powered, and will have a feed hopper with grizzly bars, fines stacking conveyor and a reject (oversized material) discharge conveyor. A step by step procedure for soil screening is provided in SOP 7.0 in Appendix D.

After screening, the fines shall be dropped from the fines stacking conveyor into a lined stockpile area, or directly into a truck bed for transport to the Bioremediation Facility in covered live-bottom semi-tractor trailers. Stockpiled material (coarse fractions) will be placed on a lined and bermed area and will be covered during periods of precipitation.

The oversized material that is screened out shall be separated, i.e., rocks, wood waste, and soil clods. The soil clods shall be spread out within the EZ in a four to six inch thick layer, on a planned excavation area which is lined and bermed, and allowed to dry sufficiently prior to pulverizing by the excavating equipment as described in the Soils

Excavation Plan in Appendix E. The soil shall then be cycled through the screener again.

Wood wastes, such as tree roots, lumber pieces etc., will be stockpiled in a covered, lined, and bermed area for use as a bulking material for future operations. The rocks will be rinsed on the decontamination pad and used as natural fill material. Visual examination and rinse water samples, tested for explosives using laboratory analysis, will be used for verification of rock decontamination. The rinse water will be collected and transported to the Bioremediation Facility for use as process water during initial compost windrow formation. Should other materials be found during the excavation activities, the Contractor shall notify the U.S. Navy for disposition. All excavation, truck and rock decontamination, stockpiling and sorting will be performed in approved areas as described in the Soils Excavation Plan in Appendix E.

Post-excavation soil samples will be collected and their locations recorded. This sampling is further described in Section 4.5 of the Pilot Scale Biofacility QAPP.

The transport route may vary pending NSWC Crane operations during the periods of soil transport. However, the following transportation route to the Bioremediation Facility and Figure 6-2 should be utilized for the Mine Fill A excavation activities.

> The vehicles will exit the Mine Fill A facility by turning left onto Highway 45 (H-45). The speed limit is ~~35~~ ***45*** MPH at this location. Travel south on H-45 for approximately 4½ miles and turn left on Highway 161 (H-161). Continue on H-161 past the golf course, and turn right onto the NSWC landfill entrance road. The Bioremediation Facility is immediately on the left.

As equipment is no longer required in the EZ it will be decontaminated and moved to the SZ. After all contaminated materials are containerized, the remaining equipment will be decontaminated and moved to the SZ. The decontamination equipment will then be cleaned and the work zone barriers removed. All decontamination fluids will be collected, **and** sampled, **and then:** used to moisten the initial compost at the Bioremediation Facility; **or** disposed at the on-site sewage treatment plant; **or** disposed at the Mine Fill A treatment facility; or ~~a disposal~~ **disposed of using a** method approved by the U.S. Navy **EPD Representative**.

6.2.3 Backfilling and Site Restoration

The extent of any excavation and the points at which post-excavation samples were taken will be surveyed to determine the volume of the excavation, to record the extent of the excavation, and to record the location of the post-excavation samples. The excavation will be backfilled to grade with non-contaminated fill from an on-site borrow source at the end of the excavation period, or at the end of each day during periods of predicted precipitation.

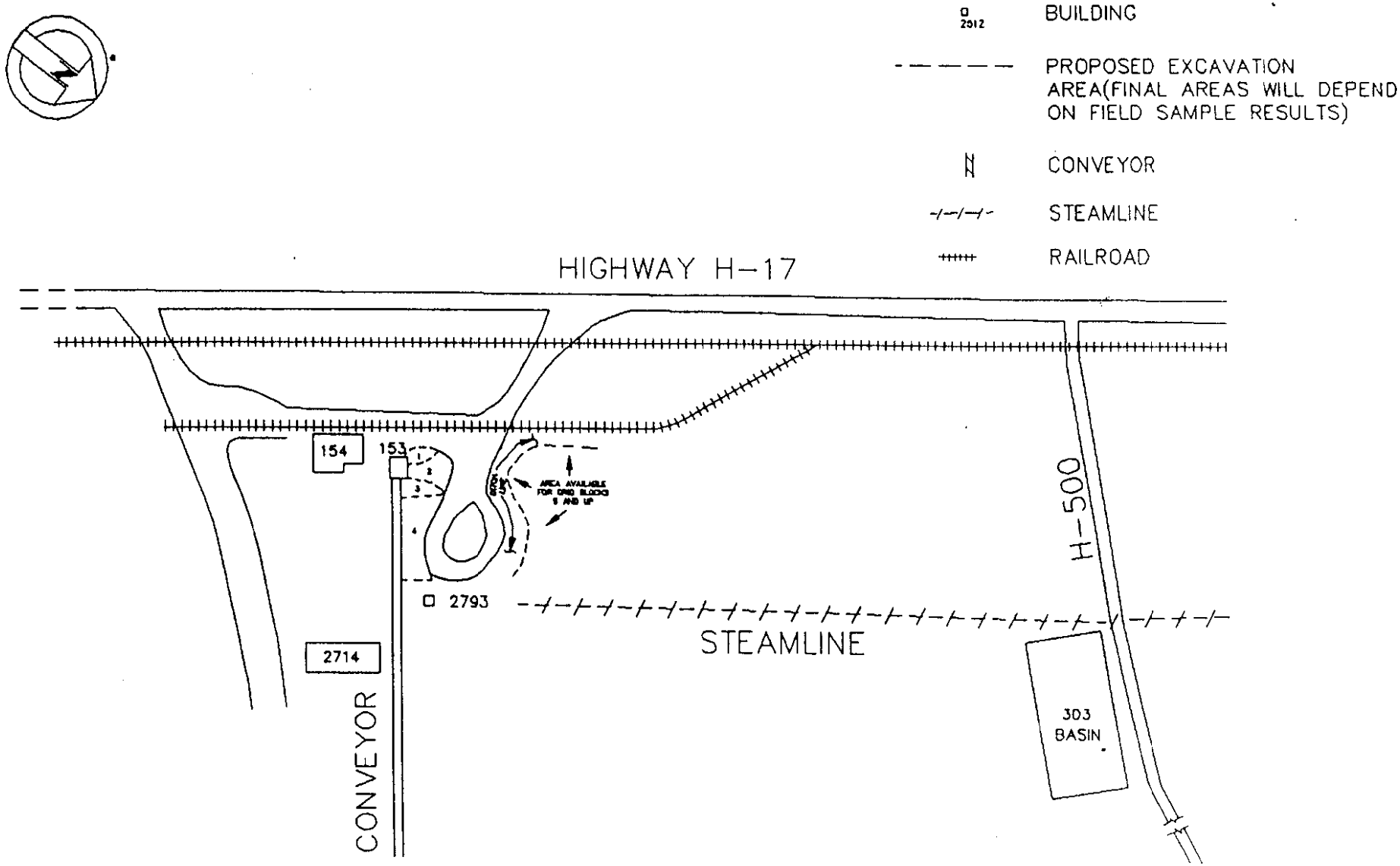

SOIL EXCAVATION AREAS-MINE FILL A

(NOT TO SCALE)

MORRISON KNUDSEN CORP.	
Drawing Figure 6-1	Rev 1
Date 4/4/97	Sheet 1

Backfilled areas will be covered with a minimum of three inches of topsoil (defined as having a minimum of 5% organic matter, which may include the clean soil compost material), seeded with native grasses, fertilized, and watered. Erosion control measures will be maintained until the growth of grasses is sufficient to prevent erosion. Additional details on backfilling and restoration activities are provided in the Soils Excavation Plan in Appendix E.

Should the area of contaminated soil require excavation beyond the volume needed for the pilot scale tests, additional soil excavation and confirmation sampling will take place during the full scale operation.

6.3 AMENDMENT SUPPLY AND STORAGE

The amendments shall be brought on-site by way of the amendment haul road and stored in the asphalt-paved amendment storage bins as illustrated on drawing P-100 in Appendix C. All amendment suppliers will be identified in the Record of Recipe form, Field ~~*Standard Operating Procedure (*~~SOP~~)~~ 4.0 in Appendix D.

6.3.1 Manure (cow, turkey, chicken)

Cow Manure

The primary amendment ~~supplier~~ **transporter** is: Dayhoff Farms, **located in Lyons, Indiana,** (cow manure, **turkey manure**, chicken manure, alfalfa hay and straw).

The cow manure comes from **Lueken Dairy, located in Birdseye, Indiana. The cows are Holstein milk animals. Their diet consists of alfalfa, grain, and grain by-products. The supplier is** a free-stall dairy and ~~is~~ **supplies** essentially pure manure (i.e., free of bedding material). This manure has been processed through a separator to remove most free liquid leaving the cow manure at approximately 79% moisture.

Chicken Manure

The chicken manure comes ***from*** **Wabash Valley Produce, located in Dubois, Indiana. The chickens are** ~~from layer~~ **laying** hens **up to 80 weeks old. Their diet consists of grain, grain by-products, and calcium. The manure contains no bedding,** and contains approximately 1% feathers, eggs or other natural impurities. It is also free of bedding material.

Turkey Manure

The turkey manure comes from D. Benham, a Purdue Farms turkey grower, located in Lyons, Indiana. The turkeys are hens, 6-14 weeks old. Their diet consists of grain, grain by-products, meat by-products, fish by-products, calcium, phosphorus, salt, trace minerals, animal and vegetable fat, anti-oxidants, metholnine, and lysine. The manure contains a bedding material

that is a mixture of approximately 30% by volume rice hulls, approximately 60% by volume sawdust, and approximately 10% by volume wood chips, and contains approximately 1% feathers.

During any winter operations, the feed and fat content of the chickens and the turkeys must be evaluated.

~~Both the~~ The cow, ~~and~~ chicken, and turkey manures will be delivered in bulk to the amendment storage area. Due to potential odor and leaching concerns, the manures will be delivered within one week of the time they will be incorporated into the windrows to ensure quality and freshness of the amendment.

6.3.2 POTW Sludge

The POTW sludge comes from the main wastewater treatment plant tanks at the NSWC. The sludge is primarily liquid and will be dried or solidified to contain a solid concentration of 20 percent or greater (consistent enough to be stockpiled without causing product run-off). It will be delivered to the Bioremediation Facility at approximately 65-70% moisture. The material will arrive only at the time that particular windrow is being formed. There will be no storage of POTW sludge at the Bioremediation Facility. Caution will be used not to spill or produce leaching of this material anywhere at the facility. The Windrow containing this material will be constructed closest to a sump area in one of the buildings in order to reduce any leachate flow into other windrows.

6.3.3 Wood Chips and Sawdust

The amendment supplier for the sawdust and the wood chips ~~are~~ *is* the ~~NSWC (from chipped wood supplies at the facility), The Good Earth Compost Company~~ *Kaho Brothers, Inc.*, located in ~~*Bloomington*~~, *Lyons*, Indiana~~, and the Jack Logsdon Company located in Bedford, Indiana~~. Wood chips and sawdust will ~~also~~ be delivered in bulk to the amendment storage area, approximately one week prior to windrow formation. Wood chips shall be ground to 1.5 inch minus size.

6.3.4 Alfalfa and Straw

The amendment supplier for the alfalfa is Dayhoff Farms. The alfalfa hay and straw will be provided in bales bound with a plastic mesh baling material which will be removed prior to amendment blending. The supplier will deliver the alfalfa within one week prior to windrow construction.

6.3.5 Potato Waste

The amendment supplier for the potato waste is a waste product from Frito Lay Potato Company, located in *Frankfuort*, Indiana and supplied by Kambach Feeds, located in Frankfuort, Indiana. Vegetable waste will be

delivered in bulk at approximately 65 to 70% moisture. **The potato waste will contain a solid concentration of 20 percent or greater (consistent enough to be stockpiled without causing product run-off). The vegetable waste shall be delivered over a 7-day period prior to windrow construction. Due to the potential of product decomposition, the supplier will not be allowed to stockpile the potato waste for more than 7 days.**

6.3.6 Amendment Storage

The amendments **(with the exception of the POTW Sludge)** shall be stockpiled in bales or piles in bins delineated by movable concrete dividers. Available amendment storage capacity has been allocated for more than 1,200 cubic yards, thus allowing more than sufficient storage capacity of amendments for the pilot scale operation. However, only sufficient amounts of amendments for the pilot scale recipes will be stored in order to minimize excess materials at the completion of pilot scale operations.

Any ponding of water on the asphalt pavement shall be manually removed within 24 hours. All stockpiles are to be covered for protection from wind and rain. The covers are to be placed in a manner that directs clean stormwater away from the storgage area. The covers are to be made of reinforced plastic of sufficient strength (10 to 20 mil plastic) to withstand typical weather conditions and frequent handling. The covers are to be held in position with a sufficient number of sand bags to keep them in place during a strong wind. Efforts will be made to avoid puncturing the covers when placing the sand bags. The stockpiles will be covered at the end of every day. During periods of precipitation, the amendments will be covered to minimize high nitrate and suspended solids run-off to the storm water retention ponds.

6.4 LOAD AMENDMENTS INTO GRINDER/MIXER

Amendments will be loaded in the proper proportions using a center-pivot loader into the farm tractor-powered grinder/mixer unit located in the amendment storage area and transported to the compost building as illustrated on drawing P-100, in Appendix C. The unit will be loaded with amendments based on the selected recipe per the volume ratios given in Table 6-1. ~~*Proper ratios will be established based on a weight conversion utilizing scales which are built into the grinder/mixer.*~~ Loading, complete grinding and blending of as much as 700 cubic feet (nearly 26 cubic yards) of amendments, will take approximately ten minutes. Section 10.0 provides a more detailed description of the operation equipment, and Field SOP 4.0 in Appendix D provides a step by step procedure for loading and blending of amendments.

6.5 LOAD AMENDMENT BLEND INTO WINDROW

Windrow formation will begin by unloading the amendment blend for recipe #1, as shown on drawing P-100, in Appendix C. The amendments will be unloaded from the grinder/mixer unit through a side mounted discharge conveyor forming a windrow approximately six feet high and 12 feet wide. The grinder/mixer will return to the

amendments storage for reloading once the blending hopper is emptied. Unloading of the amendment blend will take approximately ten minutes per load. This process will continue until a windrow is formed approximately 20 to 25 feet long.

A second windrow adjacent to and partially overlapping the first windrow, will then be loaded into the building. This will form a single larger windrow approximately 20 feet wide with two peaks six feet high. Figure 6-3 shows the amendment and soil loading windrow dimensions. As windrow #1 is completed ***with*** *(*recipe #1 amendments*)*, the amendment grinder/mixer will be loaded with materials in the proper proportions for ***the next*** recipe ~~#2~~. This process will continue until all recipe amendment windrows have been formed as shown in Figure 6-4 and drawing P-101 in Appendix C.

Once all amendment blends have been loaded into a building, the windrow turner will turn and shape each of the test piles into a 20 feet wide by 4 feet 5 inches tall windrow. Field SOP 5.0 in Appendix D provides a step by step procedure for loading the amendment blends into windrows.

6.6 LOAD SOIL INTO WINDROW

Once the amendment blend has been loaded in the building and shaped, screened soil shall be transported from the excavation area to the composting facility in covered semi-tractor live bottom trailers. During the clean soil tests, the soil will be taken from an on-site borrow source. During subsequent tests with contaminated soil, the soil will be excavated from Mine Fill A. The trucks shall be inspected in the facility work area, and the quantity and condition of soil recorded, prior to the trailer entering the building. The Project Manager may have flexibility in the field in changing truck routes through the buildings as long as track-out is minimized and the windrows are not impacted. Any major changes will be noted in the field logbook.

Upon arrival at the Bioremediation Facility, the soil will be loaded onto the amendment windrow using a self powered tow-behind hopper/conveyor unit **as** shown on drawings P-102 and P-103 in Appendix C. Once the truck has backed into the building, the hopper/conveyor unit will be attached to the rear of the trailer. As the trailer begins to unload the soil into the tow-behind hopper, the discharge conveyor will place the soil on top of the existing amendment blend windrow and complete the formation of the windrow. The truck unloading conveyor and the tow-behind conveyor are both equipped with a variable speed drive for optimum discharge control based on varying soil conditions. As the soil reaches the proper height, the truck will slowly move forward continuing to place soil over the amendment blend windrow until the trailer empties its load.

Soil will be loaded into the south windrows first working from west to east. The empty truck will disconnect from the conveyor unit, leave the building, and proceed to the vehicle decontamination facility (as illustrated on drawing P-102 in Appendix C) where the wheels and exterior will be washed with a high pressure, low volume spray. The truck will then return to the excavation site for another load of soil. Upon returning with

another load of soil, the truck will back into building #3 where the hopper/conveyor unit will be reconnected for soil unloading. This process will continue until pilot scale amendment blend windrows 1 and 2 are covered with soil to the proper height as shown in drawing P-102 in Appendix C.

Soil will be loaded into windrows on the north side of the building working from east to west in a similar fashion as described above. The truck will exit the west end of the building as shown in drawing P-103 in Appendix C. This process will be repeated for loading of soil into windrows in other buildings. Field SOP 6.0 provides a step by step procedure for transporting and loading soil into the windrows.

Incidental sediments and soils removed from the water collection sumps or ponds will be added to the windrows at this initial stage. Once mixing and initial sampling of the windrow has occurred, no additional potentially contaminated sediments, soils, or water will be added.

6.7 TURN/MIX WINDROW

Once the soil has been loaded into the windrow to the specified level, the windrow/compost turning machine will commence mixing and reforming the windrow. The travel speed of the windrow turner is adjusted automatically based on the density of the material being turned to maintain a constant load on the drum. The windrow turner may make three or more passes during initial windrow construction to assure thorough mixing. The final shape and size of the homogeneous pilot scale windrow is shown on Figure 6-3.

After turning each windrow recipe, **the equipment will be locked out and then,** loose or caked material will be cleaned off of the windrow turner by light brushing or scraping prior to turning the next recipe. Material which has fallen off the sides or been thrown beyond the ends of the windrow will be cleaned up with the skid steer loader and placed back onto the windrow maintaining the original configuration. Flyout material will be minimized by the rubber flap at the rear of the windrow turner. The windrow turning frequency is expected to be daily but will be adjusted as necessary to maintain proper aeration, temperature, and moisture as described in Section 8.0. Figure 6-4 depicts four pilot scale windrows shown with amendment blends only (top view) and the final windrow formation after soil addition (bottom view).

Moisture addition will take place during the windrow mixing stage. A 1½ inch flexible hose will be connected to the spray manifold inlet mounted on the windrow turning machine for a water supply. The windrow turner is also equipped with a ~~200~~ ***600***-gallon tank for use when water addition is required without a flexible hose source. Potable water will be sprayed onto the compost as it is mixed, thus maintaining the desired moisture concentration throughout the windrow matrix. The method for determining the quantity of water added is addressed in Field SOP 8.0 in Appendix D.

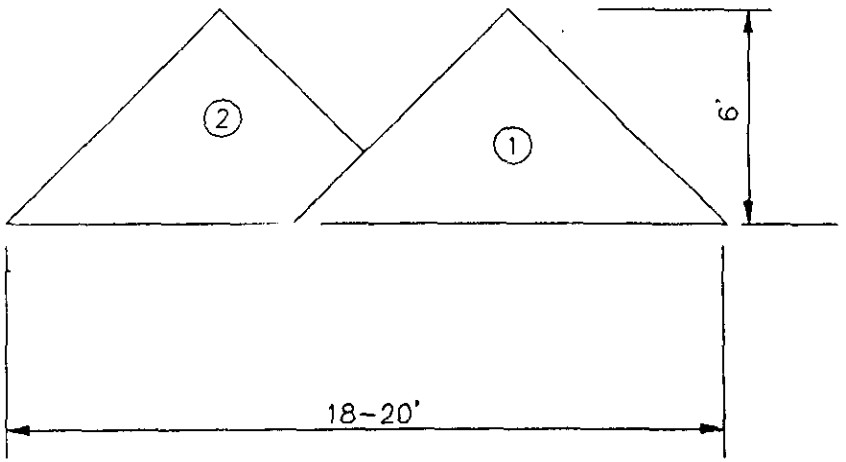

A

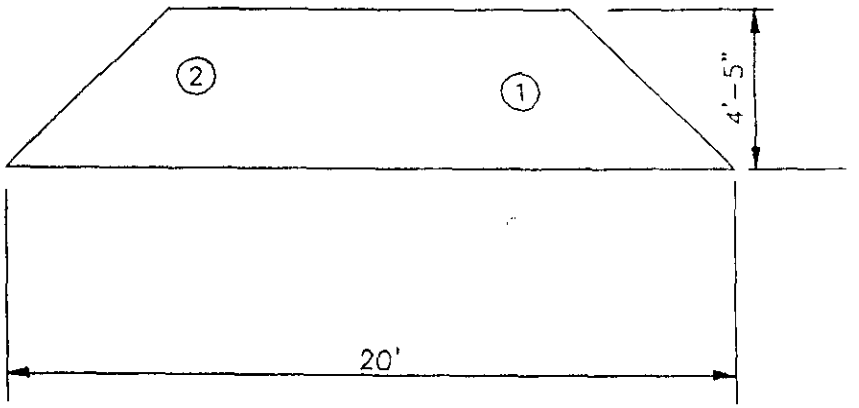

B

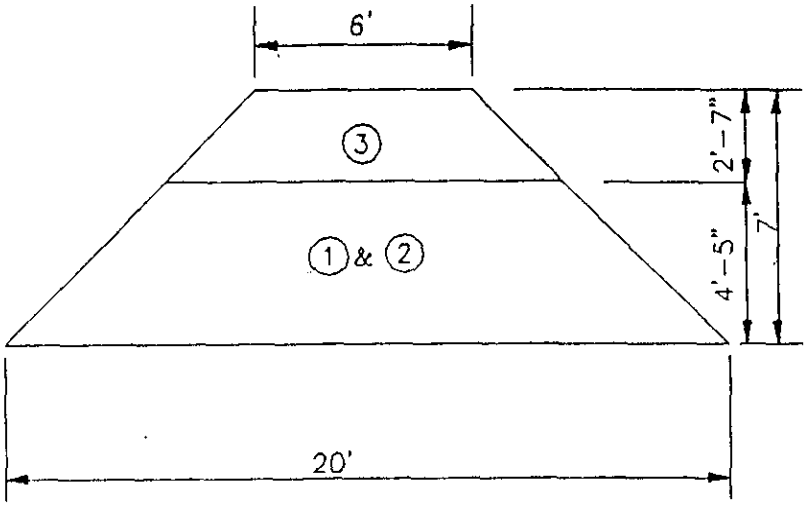

C

LEGEND

1. AMENDMENT BLEND
2. AMENDMENT BLEND
3. SCREENED SOIL

WINDROW FORMATION DIMENSIONS

MORRISON KNUDSEN CORP			
Drawing	FIGURE 6-3	Rev.	1
Date	4/4/	Sheet	1

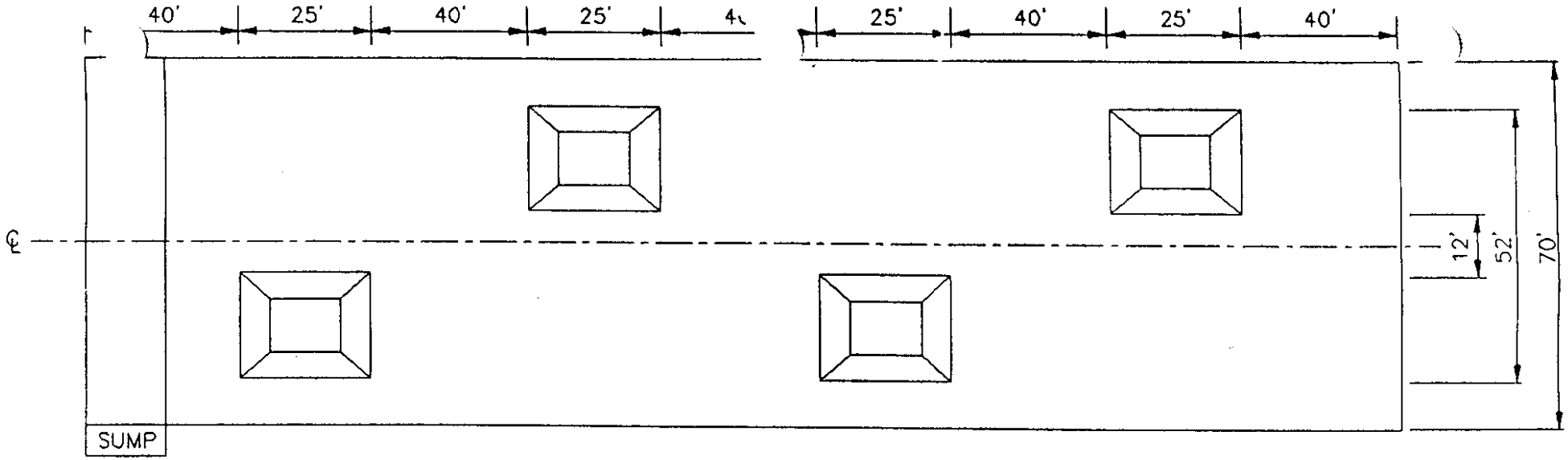

AMENDMENT PILES

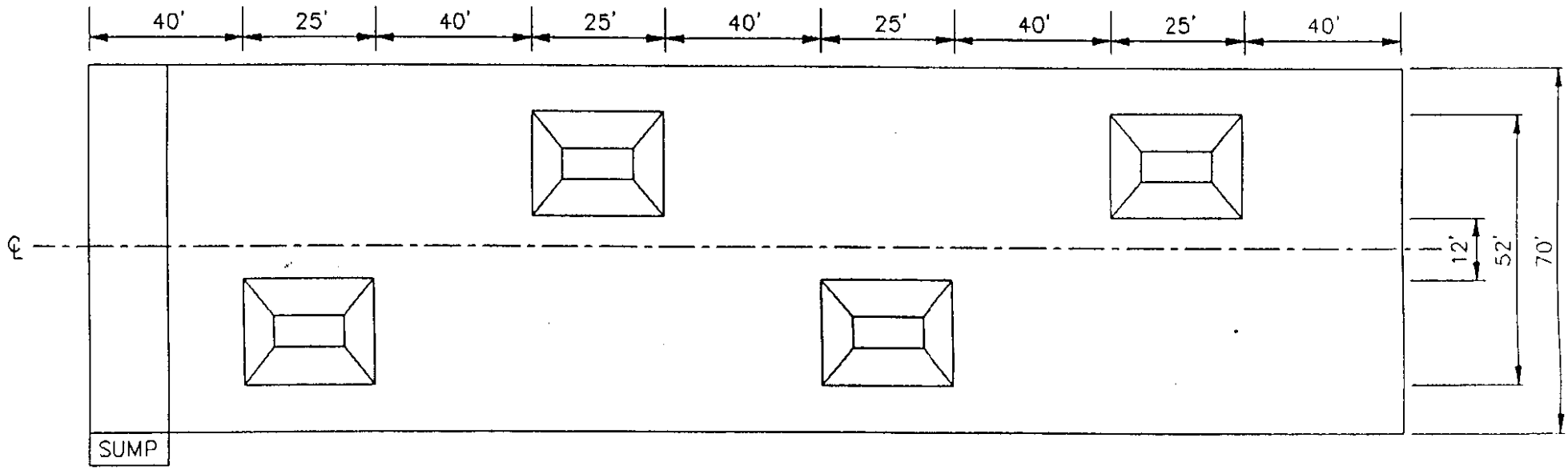

AMENDMENT WITH SOIL ADDED PILES

(FINAL FORM)

MORRISON KNUDSEN CORP	
Drawing Figure 6-4	Rev 1
Date 4/4/97	Sheet 1

Liquids collected from the decontamination stations or storm water collection ponds may be used as moisture addition during initial windrow formation only. Once mixing and initial sampling of the windrow has occurred, no additional potentially contaminated liquids will be added, only potable water will be used for moisture addition. Additional water supply sources (such as truck or trailer mounted tanks with spray wands) will be utilized, if necessary, when large amounts of water are required.

General building cleanliness will be maintained by using the front end loader and/or the skid steer loader to collect stray compost materials and reform the piles, if necessary. Brooms and shovels will be used in inaccessible areas. Any ponding liquid will be manually moved to the sump within 24 hours. The windrows will be kept segregated, well-formed, and identified with signs containing the mix number, quantities of ingredients, and date formed.

Dust is not expected to be generated during the composting operation due to the high moisture content of the compost material. Vapor and odor are not expected to impact air quality during composting activities because the use of open-ended buildings will maintain proper ventilation.

6.8 LANDFILL PERMITTING

An application for a Minor Modification to the existing landfill permit will be submitted to IDEM. This modification is required to obtain approval for using finished compost material as a landfill daily cover material. Analytical data from the pilot scale treatment will provide the necessary data for this permit.

6.9 UNLOAD WINDROW AND TRANSPORT FOR DISPOSAL

Once the treatment goals have been met, as determined by confirmation sampling the building will be emptied. The loader will transfer successfully treated material only, directly from the windrows to the semi-tractor live bottom trailers. The trailers will be free of contaminated soil prior to loading the remediated soil/compost mix. Once loaded and tarp covered, the trucks will proceed to one of the empty buildings. The completed compost will be unloaded and stored in discrete, segregated piles until the pilot scale test results have been verified for disposal. The material will then be transported to the on-site landfill disposal area for use as daily cover.

Should the compost material explosive concentrations exceed the pilot scale remedial goals, a contingency plan will be put into effect as described in Section 8.2.7.

7.0
AUXILIARY SYSTEMS DESCRIPTION

7.1 ANALYTICAL SERVICES

Analytical services will be required for the process parameter monitoring and constituent concentrations. The following paragraphs describe the on-site and off-site services. A more detailed description of these activities is provided in and required by the approved Pilot Scale Biofacility QAPP and in the Field SOPs provided in Appendix D.

7.1.1 Field Screening Services

The following process parameters will be monitored, using field instruments as described in Field SOP 1.0 in Appendix D, at the Biofacility during the treatment process as part of the Pilot Scale test:

- Temperature
- Moisture Content
- pH
- Oxygen

Process parameters listed above are further described in Section 8.0. **Thermophilic bacteria testing shall be performed, if possible, to determine the quantity and type of organisms in the piles.**

Atmospheric combustible gases, ammonia, carbon dioxide, carbon monoxide, and hydrogen sulfide will also be monitored for personnel safety as described in Section 15.0.

Measurements that affect the quality of an activity or operation will be taken only with kits, instruments, tools, gauges, or other measuring devices that are controlled, calibrated, adjusted and maintained at predetermined intervals to a specified accuracy. The calibration and maintenance of field monitoring equipment and instrumentation will be in accordance with Field SOP 1.0 provided in Appendix D, and shall be documented in the Field or Site Safety and Health Logbooks, as applicable. Air monitoring equipment used for personnel exposure monitoring will be calibrated prior to use, or after long periods of non-use during the day as described in the SSHP.

Preventive maintenance programs will, at a minimum, be established for equipment that would otherwise be subject to breakdown, when the breakdown could lead to safety hazards, environmental contamination, or loss of completeness and accuracy in data. Field SOP 1.0 in Appendix D, provides the maintenance and calibration requirements to be performed for field instrumentation.

7.1.2 Analytical Laboratory Services

Off-site laboratory analysis of soil and water samples collected from compost or wastewater at the Biofacility and from excavations at Mine Fill A will be in compliance with methods and procedures defined in the approved Pilot Scale Bioremediation Facility QAPP.

7.2 DECONTAMINATION

During site activities, all personnel shall minimize contact with contaminated materials to keep "clean" during site activities. All personnel should minimize kneeling, splashing, and inadvertent physical contact with contaminated materials. Field procedures will be developed to control over spray and run-off and to ensure that unprotected personnel working nearby are not affected.

Entrance to the exclusion zones will be limited to personnel trained in accordance with 29 CFR 1910.120. The level of protection worn within each exclusion zone will be specified by the Site Safety and Health Officer (SSHO). Selection of personal protective equipment and anticipated levels of protection are summarized in Tables 5 and 6 of the SSHP. All personnel leaving the exclusion zone will pass through a decontamination zone and follow personnel decontamination procedures as specified in the SSHP.

Decontamination will be required for excavation equipment, gravel and rocks, ~~dump~~ trucks, operating equipment, and personnel. The following paragraphs describe these activities.

7.2.1 Excavation Site Equipment and Rock Washing

Prior to exiting the excavation site, loaded trucks will be inspected for exterior cleanliness. Each truck exterior and wheels will be protected with plastic lining during soil loading; and, therefore, should not need to be decontaminated. However, in case of accidental spillage of contaminated soil onto the truck exterior or if the truck is driven over a contaminated area, the decontamination process will take place. The excavation site decontamination facility is described in the Soils Excavation Plan provided in Appendix E. The equipment decontamination procedure is described in detail in Field SOP 3.0 provided in Appendix D.

Periodically, the need for washing of gravel and/or rocks will occur when excavating in roadway areas, near building foundations, or rocky terrain. The rocks and boulders in the oversized material pile rejected from the soil screening process will be sorted out from the soil clumps and woody vegetation as described in the Soil Excavation Plan provided in Appendix E. The Soil Excavation Plan describes the excavation boundaries, staging areas, decontamination of equipment, facility, and process of soil screening. The separated rocks or gravel will be loaded into a front-end loader bucket and taken to the decontamination pad. The rocks and or gravel will be thoroughly washed of all visible signs of soil with the high-pressure, low-volume spray wash unit. Final rinse samples will be collected and analyzed to determine the cleanliness of the

washed rocks. If the rinse water does not contain detectable levels of explosives, the washed rocks will be stockpiled in a clean area for use as natural backfill material or as designated by the U.S. Navy. The cleaned gravel will also be stockpiled for use as natural fill material.

7.2.2 Biofacility Truck and Equipment Washing

In order to minimize the tracking of potentially contaminated materials, trucks and other heavy equipment operating inside the compost buildings will be decontaminated prior to exiting the Bioremediation Facility as described in Field SOP 3.0 found in Appendix D. The trucks or heavy equipment will be inspected for exterior cleanliness. All loose dirt shall be swept or brushed off the vehicle exterior. The vehicles will enter a covered staging area where the wheels, wheel wells and other visibly contaminated areas will be washed with a high-pressure, low-volume water spray using a hand held wand connected to an overhead high-pressure supply line ~~pivoting at the center~~. This design enables the operator to ~~walk completely around the vehicle to~~ clean all sides **of the vehicle**. Operators will be trained to avoid potential over spray out of the building or over the walls. **And, personnel will avoid over spraying at the boot wash area.**

At completion of the Pilot Scale tests, equipment will be decontaminated at the vehicle wash area located at the facility exit. In addition to the typical washing requirements specified above, all other areas exposed to potentially contaminated materials will be washed and inspected. This includes truck beds, loader and backhoe buckets, etc. Final rinse samples will be collected and analyzed to determine the cleanliness of the equipment.

All wash fluids will be collected in the vehicle wash area sump. The wash water will be collected and stored in poly tanks or transported to the compost buildings for use as initial process water. Sediments will be collected and added to the windrows at the beginning of a compost cycle during initial windrow formation. No contaminated soil, sediments, or wash water will be added to the compost piles once the initial windrow sampling has been performed.

7.2.3 Personnel Decontamination Shower Trailer

A personnel decontamination trailer is located next to the equipment decontamination facility and consists of a change room area, lockers, lavatory, toilets and showers. ~~*The northern end of the trailer serves as a lunch/conference room.*~~ The trailer sanitary sewer line is routed to the pump/lift station in the office/laboratory area.

7.3 WATER/FLUID COLLECTION AND DISPOSITION

7.3.1 Compost Building Sump Water

Each of the three structures is equipped with an epoxy-coated sump for collection of any excess water in the building. The building sump water will be collected, stored in polyethylene (poly) storage tanks, if necessary, and recycled in the treatment process for compost moisture control. See Process Flow drawings 4324-0009-01-A and 01-C in Appendix C. Any sediments collected in the building sumps will be removed and added

to the windrows at the beginning of the compost cycle. No contaminated soil, sediments, or wash water will be added to the compost piles once the initial windrow sampling has been performed.

7.3.2 Truck and Equipment Decontamination Water

All wash fluids collected in the vehicle wash area sump and the excavation site equipment wash area will be collected and stored in poly tanks or transported to the compost buildings for use as initial process moisture addition. ***No wash fluid which contains soap or bacterial substances shall be used as windrow process water.*** No contaminated soil, sediments, or wash water will be added to the compost piles once the initial windrow sampling has been performed. In the unlikely event that all the wash water is unable to be used in the compost process, the excess wash water will be stored in poly tanks and sampled for disposal. The method of disposal will be primarily at the on-site water treatment facility at Rockeye or Mine Fill A. See Process Flow drawings 4324-0009-01-B and 01-C in Appendix C. A secondary disposal method will be to use an off-site disposal facility, as approved by the U.S. Navy. Sampling frequencies, procedures, and analytical methodologies are contained in Section 4.0 of the approved Pilot Scale Biofacility QAPP.

7.3.3 Storm Water Diversion and Retention Pond Water

The facility will utilize both the existing topography and site drainage controls to control storm water run-off and run-on.

Two lined storm water retention basins sized to store rainfall from a 10-year, 24-hour storm ~~will be~~ ***are*** constructed inside the Bioremediation Facility perimeter. These retention basins will retain and store storm water from the area paved with asphalt inside the facility. Pond #1 will retain a maximum of 428,000 gallons of storm water and pond #2 will retain a maximum of 407,000 gallons. A peak discharge flow to the local drainage swales will vary from 315 gallons per minute (gpm) at full level to 160 gpm at low level allowing for controlled off-site storm water discharge. Water collected in the retention basin will be sampled ~~immediately~~ ***within 24 hours*** following a ***major*** storm ***event*** to determine whether the water meets off-site discharge requirements. Water not meeting off-site discharge requirements will either be recycled in the compost building for initial windrow compost moisture control or transported to the water treatment facilities located at Mine Fill A or Rockeye. Sampling frequencies, procedures, and analytical methodologies are contained in the approved Pilot Scale Biofacility QAPP. **The discharge pipes from the ponds shall remain closed and locked until discharge is approved. At no time shall the operators of the facility allow the ponds to have less than 2 feet of freeboard. If the freeboard comes close to that limit and a storm event is anticipated, the U.S. Navy EPD Representative shall be immediately notified.**

8.0
PROCESS PARAMETERS AND MONITORING

Process control monitoring shall be performed during composting activities. Critical monitoring shall be documented using task-specific formats. General conditions may be noted in project log books or daily reports. For consistency, all monitoring and *sampling shall be performed at pre-determined locations within each windrow.* Sample locations other than those that are pre-designated shall be clearly identified in the field log book. The following sections identify the requirements for the non-contaminant parameters to be monitored. Sample locations and frequencies for contaminant parameters are described in Section 4.0 of the approved Pilot Scale Biofacility QAPP. Calibration of all field instrumentation will be performed daily prior to use as specified in Field SOP 1.0 found in Appendix D. Recalibration will be performed as required.

The full scale interim measures cleanup goals will be established based on data provided during the pilot scale operation. The recipes will be employed using 25% soil and variations of amendments. It is expected that some recipes will perform better than others. The recipe which provides the best performance in terms of explosive contaminants reduction with shortest process time and the lowest cost will be selected for use in the full scale operations. Those windrows whose recipes fail to meet pilot scale performance goals will remain in **one** ***of*** the building**s** until they can be reintroduced in the full scale operation, mixed with amendments based on the successful recipe, and be re-treated in order to meet the established full scale cleanup criteria.

If all pilot scale tests fail and no mix meets the performance goals, the U.S. EPA Region 5 Coordinator shall be notified and new bench scale testing will be required.

8.1 PROCESS PARAMETERS

The process parameters essential to successful biodegradation of the explosive contaminants are listed in Table 8-1. The parameters will be measured and monitored as described in Section 8.2 of this Operational Plan. All in-situ measurements (i.e., temperature, oxygen level) will be taken prior to removing sample material for other measurements or analyses. These process parameters apply to both clean soil and contaminated soil testing. If process parameters fail during clean soil tests, the decision may be made by the U.S. Navy and **the** U.S. EPA to delete that mix from further testing. If process parameters fail during contaminated soil tests, the decision may be made by the U.S. Navy and **the** U.S. EPA to continue testing if degradation is evident.

8.2 PROCESS MONITORING

All in-situ process parameters such as temperature and oxygen, will be ~~, monitored in undisturbed compost, i.e.~~ **measured** prior to sample extraction so as to obtain representative levels **of** the measured parameter. Adjustments to the process for temperature, oxygen, and moisture will be performed pending the monitored results. The adjustments will be made based on predetermined contingency process methods discussed in the following sections. Figure 8-1 shows the decision paths for instituting

the contingency process methods.

TABLE 8-1 NON-CONTAMINANT PROCESS PARAMETERS	
Process Indicators	Operating Range
Temperature	25 to 60 °C
Moisture	40 to 60 % (MWHC)[1]
pH	5.5 to 9.0
Carbon : Nitrogen	Various[2]
Oxygen	5 to 20%

[1] Denotes Maximum Water Holding Capacity
[2] C:N will be monitored for change only and will not be adjusted. C:N will vary based on mixture selection.

8.2.1 Temperature Monitoring

Temperature is one of the most important monitoring parameters since it is a primary indicator of successful achievement of conventional thermophilic composting operations in the windrows. The process goal is to maintain average windrow temperatures near 55°C for at least two weeks. The average pile temperature rises to the temperature range of 25 to 40°C within the first few days of formation, continues rising to within the temperature range of 40 to 65°C, and maintains that temperature range for at least two weeks. Based on conventional composting practice, such temperatures indicate a healthy, metabolically active windrow. Temperature decrease over time below 50°C is viewed as an indicator of a pile that is nearing the end of its operation (Weston, 1993).

The temperature of each windrow shall be monitored daily. Temperature readings will be taken before and after each turning ***event*** of the windrow, at the core and near the surface. ***A turning event may consist of multiple passes of the turning machine.*** Temperature readings shall be taken at six sampling/monitoring locations at each of the cross-sections using a hand-held compost temperature probe and indicator as specified in Field SOP 1.0 in Appendix D. These locations are selected to provide representative temperature profiles of each cross-section in the windrow for the inner core and outer near-surface conditions.

Ambient air temperature and humidity inside the buildings shall be monitored daily during any composting activities using a standard alcohol or mercury thermometer and a hygrometer. The thermometer will incorporate a degrees Celsius scale. All temperature and humidity measurements shall be recorded in the field log book. Temperature monitoring equipment will be calibrated as specified in Field SOP 1.0 in Appendix D.

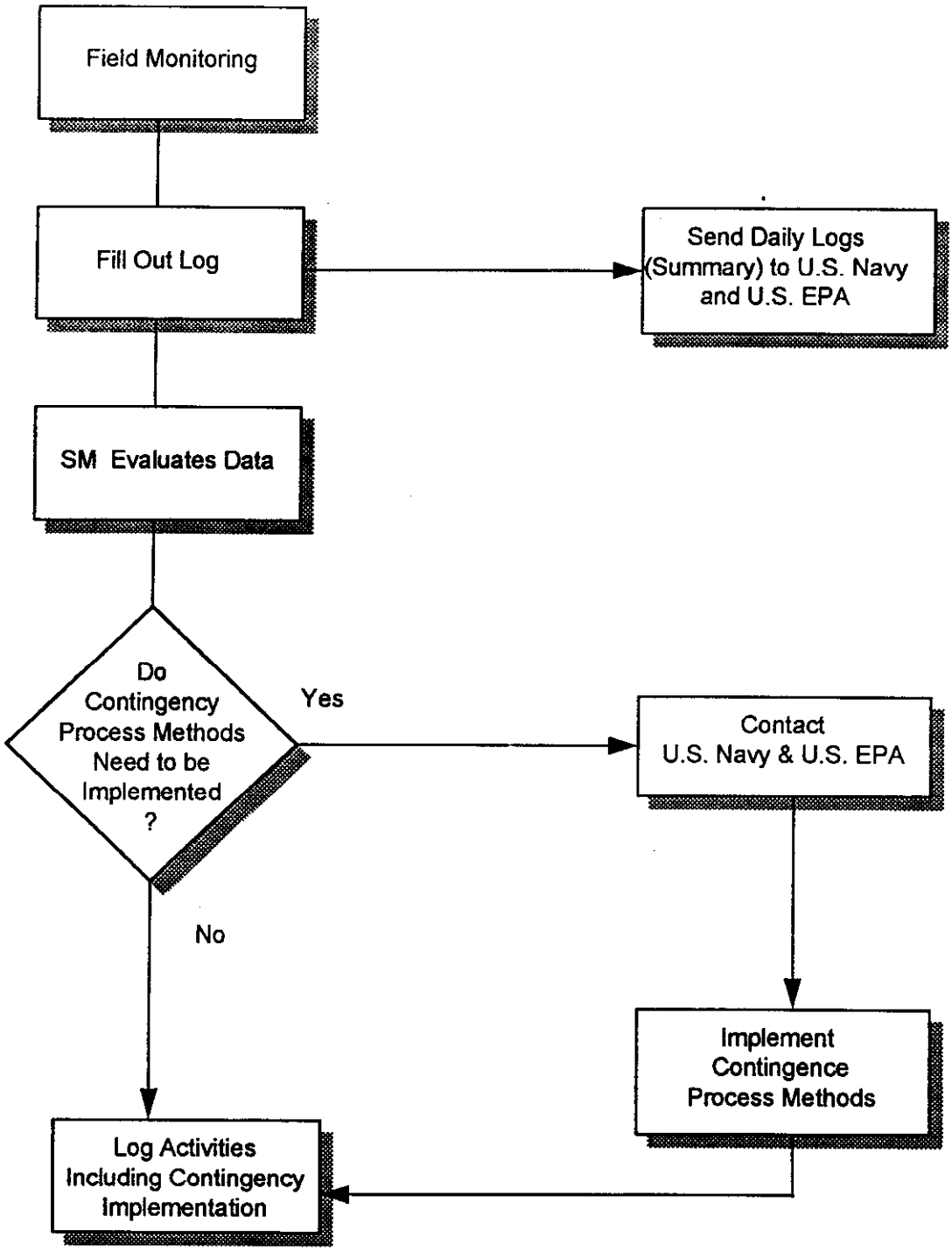

FIGURE 8-1
DECISION FLOW CHART

The following contingency plans are related to temperature monitoring:

~~1. If, after two weeks, the average temperature fails to reach 40° C in a clean soil test, then the decision may be made by the U.S. Navy and U.S. EPA to delete that mix from further testing~~ **~~the mix will be eliminated from further testing.~~**

~~2.~~
1. If the moisture content is within the required range, and the oxygen levels are greater than 10%, and temperatures of the compost do not reach the thermophilic range of 40 to 60°C, and target levels of TNT, HMX, and RDX are not being degraded, then the recipe will be considered a failure. Reintroduction or alterations of amendments will not be performed without approval of the U.S. Navy and **the** U.S. EPA representatives.

~~3.~~
2. If the moisture content is within the required range, and the oxygen levels are less than 5%, and temperatures of the compost do not reach the thermophilic range of 40 to 60°C, and target levels of TNT, HMX, and RDX are not being degraded, then the windrow will be turned within 6 hours for additional aeration.

~~4.~~
3. If the moisture content is within the required range and the temperature at any monitoring location in the compost pile exceeds 70°C, then windrow turning will be performed within 6 hours in order to provide aeration and cooling. Temperatures greater than 60°C may be detrimental to microbial growth and explosives degradation will be reduced.

8.2.2 Moisture Level Monitoring

The operating goal for composting moisture content is 40 to 60% MWHC. If moisture levels are excessively low or high (beyond the typical ranges), proper composting and explosives degradation may be affected. Too little moisture will inhibit microbial movement and nutrient availability. Excess moisture will cause the moisture to fill the void spaces needed for proper aeration, thus reducing the oxygen level and aerobic microbial growth.

Moisture level monitoring will be performed ***a minimum of*** three times per week***, prior to windrow turning. Because the results can not be obtained until approximately the next day, and it is determined that moisture needs to be added, moisture will be added whenever possible prior to or during windrow turning the following day.*** ~~prior to windrow turning, thereby enabling moisture to be added during the turning operation.~~ If moisture is added to the windrows ***at any time***, moisture levels will be checked again after windrow turning. Moisture level samples will be collected from three locations at each cross-section as described in SOP 1.0 in Appendix D. The samples at each cross-section location will be composited for a total of four composited samples per windrow. The following moisture data will be determined per the procedure described in Field SOP 1.0 provided in Appendix D.

- Percent moisture.
- Water-holding capacity (i.e., percent moisture at saturation).
- Percent saturation.
- Percent water-holding capacity.

All moisture measurements shall be recorded in the field log book. The analytical balance equipment will be calibrated as specified in Field SOP 1.0 in Appendix D.

Moisture levels will be adjusted to the proper levels by water addition from any of three available sources:

1) Through a spray system integral to the windrow turner machine, **or**

2) By direct spray from a low pressure potable water supply hose, or

3) By direct spray of recycle water (~~decon water~~, **building sump water,** storm water, etc.) from a collection tank supply hose**, only at the initial compost creation stage.**

Moisture addition during the initial windrow formation may utilize the recycle water sources, however once the process has been initiated and sampling has been performed, only a potable water source will be used for moisture addition. **Equipment decontamination water using soap or other chemicals shall NOT be used as recycled water.** Excess moisture will be adjusted by increasing the turning frequency thereby driving off excess moisture by aeration.

The following contingency plans are related to moisture level monitoring:

1. If the moisture content is below 40% of the MWHC, then moisture addition will be performed during the windrow turning process. The decision to add moisture will be based on the moisture content analysis results as described in Field SOP 1.0 in Appendix D. Due to variability of density between different recipes and changes in volume and density during the composting process, it is not possible to provide generic guidance for the quantity of water to be added for moisture adjustment. ~~*Based on initial windrow volumes and average densities, approximately 67 gallons of water will raise the moisture content by 1% for a typical windrow*~~ ***Due to high evaporation rates with high ambient temperatures,*** to avoid adding too much moisture, no more than ~~*100*~~ 300 gallons will be added to any windrow prior to an additional moisture content analysis. ***In normal weather conditions, no more than 250 gallons will be added without taking a moisture reading.***

2. If the moisture content is above 60% MWHC, and the windrow temperature is below 45°C, then additional windrow turning will be performed to provide aeration and drive off excess moisture. If the moisture content cannot be reduced and the windrow fails to sustain temperatures in the thermophilic range (above 40°C), then the pile will be considered a failure. Reintroduction or alterations of amendments will not be performed without approval of the U.S. Navy and **the** U.S. EPA representatives.

8.2.3 pH Level Monitoring

It is anticipated, based on experience at UMDA and WES, that the pH will steadily increase from near neutral to a level as high as 8.8 within weeks of operation and then decrease to a level between 7 and 8. Levels of pH are not intended to be adjusted during treatment. Acidic pH values below 5.5 will be alleviated by the aeration and increasing oxygenation to avoid anaerobic conditions and acid formation. Reintroduction or alterations of amendments for the purpose of pH adjustment will not be performed without approval of the U.S. Navy and U.S. EPA representatives.

Samples for pH level monitoring will be collected at location #1 for each of the four cross-sections, once per week, prior to turning, as described in Field SOP 1.0 found in Appendix D. The pH monitoring equipment will be calibrated as specified in Field SOP 1.0 in Appendix D.

The following contingency plan is related to pH level monitoring:

> If pH is less than 5.5 or greater than 9.0, then pH monitoring frequency and locations may be increased based on U. S. Navy and U.S. EPA recommendations.

8.2.4 Total Organic Carbon Level Monitoring

Carbon and Nitrogen are the primary nutrient sources for microbial growth. Total Organic Carbon (TOC) will be monitored for the purpose of tracking the carbon to nitrogen (C:N) ratio during the composting process. The C:N ratio is not intended to be adjusted. Reintroduction or alterations of amendments for the purpose of TOC adjustment will not be performed without approval of the U.S. Navy and **the** U.S. EPA representatives.

Samples for TOC analysis (EPA method 9060) shall be collected from each of the sampling/monitoring cross-sections, at locations 1, 2, and 3, on days ~~0, 7, 14, 21 and 28~~, **0, 5, 10, 20, 30, 40, and 60** of the windrow life cycle after complete mixing by the windrow turning machine has been performed, as described in Field SOP 2.0 in Appendix D. Sampling and analysis requirements for TOC level monitoring shall be performed as described in the approved Pilot Scale Biofacility QAPP.

8.2.5 Nitrogen Level Monitoring

Carbon and Nitrogen are the primary nutrient sources for microbial growth. Total Kjeldahl Nitrogen (TKN) levels will be monitored for the purpose of tracking the C:N ratio during the composting process. The C:N ratio is not intended to be adjusted. Reintroduction or alterations of amendments for the purpose of TKN adjustment will not be performed without approval of the U.S. Navy and U.S. EPA representatives.

Samples for nitrogen analysis (EPA method 351.3), as TKN, shall be collected from each of the sampling/monitoring cross-sections, at locations 1, 2, and 3, on days ~~0, 7, 14, 21, and 28~~ **0, 5, 10, 20, 30, 40, and 60** of the windrow life cycle after complete

mixing by the windrow turning machine has been performed, as described in Field SOP 2.0 in Appendix D. Sampling and analysis requirements for TKN level monitoring shall be performed as described in the approved Pilot Scale Biofacility QAPP.

8.2.6 Oxygen Level Monitoring

Typical compost oxygen levels for rapid degradation are greater than 5%; however, the preferred level is much greater than 5%. If sufficient oxygen levels are not maintained, proper microbial degradation may not occur, and thermophilic temperatures would not be maintained. Oxygen levels decline rapidly to very low levels (less than 5%) in a short time after mixing. Oxygen levels of less than 1% indicate the process is approaching anaerobic conditions, and aeration is required.

Oxygen level monitoring will be performed at the same locations and frequency as the temperature monitoring activity using a hand-held probe and indicator as described in Field SOP 1.0 in Appendix D. Typical compost oxygen levels for rapid degradation are greater than 5%, however the preferred level is as high as 20%. All oxygen measurements shall be recorded in the field log book. Oxygen monitoring equipment will be calibrated as specified in Field SOP 1.0 in Appendix D.

The following contingency plans are related to oxygen level monitoring:

1. If it is necessary to adjust aeration (interstitial oxygen), then the turning frequency will be adjusted **based on temperature, if necessary.**

2. If moisture content is within the acceptable range, and the windrow temperature is falling and the oxygen content is below 5%, then windrow turning will be performed within the same day.

3. If, after thorough turning, the oxygen content is still below 5%, ***and temperatures are below 40 degrees C,*** then the windrow may not have sufficient pore space (bulk) and will be considered complete or a failure. Reintroduction or alterations of amendments will not be performed without approval of the U.S. Navy and U.S. EPA representatives.

8.2.7 Explosives Level Monitoring

Explosives to be monitored ***during the Contaminated Soil Phase,*** are listed in Table 8-2. Samples for laboratory analysis (U.S. EPA SW846 Method 8330) will be collected from each of the sampling/monitoring cross-sections, at locations 1, 2, and 3, on days ~~0, 7, 14, 21, and 28~~ **0, 5, 10, 20, 30, 40, and 60** of the windrow life cycle after complete mixing by the windrow turning machine has been performed, as specified in Field SOP 2.0 in Appendix D. Sampling and analysis requirements for explosives level monitoring shall be performed as described in the approved Pilot Scale Biofacility QAPP.

TABLE 8-2 EXPLOSIVES PROCESS PARAMETERS	
Compound	Compound
TNT	2-Am-DNT
RDX	2,4-DNT
HMX	2,6-DNT
TNB	2-nitrotoluene
1,3-DNB	3-nitrotoluene
Nitrobenzene (NB)	4-nitrotoluene
4-Am-DNT	Tetryl

All analytical results will be reviewed and compared to the performance goals as established in Section 1.2 of this plan. If the goals have not been reached, the mix is considered a failure. Those windrows whose recipes fail to meet pilot scale performance goals will remain in a Bioremediation Facility building until they can be reintroduced in the full scale operation, mixed with amendments based on the successful recipe, and be retreated in order to meet the established full scale cleanup criteria.

If performance goals have not been met for any of the pilot scale mixes, then the U.S. EPA Region 5 Project Coordinator and the U.S. Navy will be notified and additional bench scale testing may be required to provide recipe alterations for pilot scale operations.

8.2.8 Metal Contaminants Monitoring

Samples for laboratory analysis will be collected from each of the sampling/monitoring cross-sections at locations 1, 2, and 3, on days 0 and ~~28~~ **60** (or completion) of the windrow life cycle after complete mixing by the windrow turning machine has been performed, as specified in Field SOP 2.0 in Appendix D. Sampling and analysis requirements for selected metals and TCLP metals shall be performed as described in the approved Pilot Scale Biofacility QAPP.

The analytical results will be reviewed to determine the before and after effects of composting on the metals leachability levels as well as provide analytical results for the Landfill Minor Permit Modification discussed in Section 6.8.

If the metals levels do not meet State landfill permit requirements, then the U.S. Navy and U.S. EPA will be notified and the Agencies will make a disposal determination.

8.2.9 Air Monitoring

In addition to the process control monitoring, atmospheric air monitoring and sampling will be conducted ***as specified in*** ~~*to meet the requirements of*~~ the Site Safety and Health Plan developed for Operations at the Biofacility. ~~*Gas sampling will include volatile organics, oxygen level (percent volume), hydrogen sulfide, carbon monoxide, carbon dioxide, ammonia, oxides of nitrogen, nitrous fumes, formaldehyde, total dust, metals as an aerosol, explosive residues as an aerosol, and biological agents as an airborne aerosol.*~~ The industrial hygiene air monitoring and sampling campaign is discussed in Section 15.0.

9.0
SAMPLING AND ANALYSIS

All sampling and analysis will be performed as described in this Section and the approved Pilot Scale Biofacility QAPP. The QAPP describes sampling and analysis procedures including laboratory methodologies and Quality Assurance/Quality Control requirements for the following activities:

- Compost windrow sampling requirements for contaminants.
- Fluid collection systems sampling requirements for storm water and decontamination water.
- Pre- and Post-excavation soil sampling requirements
- Health and Safety air sampling.

Table 9-1 summarizes the parameters to be monitored and the sample frequency described below. Appendix D of ~~the~~ **this** Pilot Scale Operational Plan contains field process parameter SOPs.

9.1 COMPOST WINDROW SAMPLING

The three composting structures at the facility shall be numbered Buildings 1 through 3. Within the buildings, the pilot scale windrows shall be numbered ~~*consecutively*~~ ***consistently with the recipe mix number.***

For sampling and monitoring purposes, four cross-sections, lettered A through D, shall be established along each windrow. Cross-section A shall be five feet from the end of the windrow nearest the Facility work area (northeast end). Cross-section D shall be five feet from the end of the windrow furthest from the Facility work area (southwest end). Locations B and C shall be evenly spaced between locations A and D as shown on Figure 1-1, in Field SOP 1.0 in Appendix D. At each cross-section, six sampling/monitoring points shall be established as described in Field SOP 2.0 in Appendix D.

9.2 FLUID COLLECTION SYSTEMS SAMPLING

Various liquids may be collected throughout the facility including compost process leachate, storm water, and decontamination water. These liquids are expected to be used as sources of process water for the initial compost windrow formation. Additional quantities of waste water generated during the project will be sampled for discharge or disposal, as required. The frequency of liquid sample collection will depend on the quantities generated or collected. The sampling parameters are listed in Table 9-1.

TABLE 9-1 SAMPLING AND ANALYSIS SCHEDULE[1]			
Matrix	Parameter	Frequency	Method
1. Pre-excavation soil	Explosives per Table 8-2; Totals & TCLP metals, VOCs & TCLP list VOCs per QAPP	2 composites per 20' x 20' grid block; one grab sample (VOCs)	Method 8330, 6010, 1311, 7470 & 8240.
2. Post-Excavation soil	Per Table 8-2; Totals of site-specific metals & VOCs per QAPP	Base: 1 composite and one grab per 20' x 20' grid block Sidewalls: 1 composite and 1 grab per 20'	Laboratory (various)
3. Windrow compost	Per Table 8-2, TOC, TKN	1 sample per location per cross-section: Day ~~0, 7, 14, 21, 28~~ **0, 5, 10, 20, 30, 40, 60**	Laboratory (SW846 8330, EPA 9060 & 351.3)
4. Windrow compost	TCLP & Totals of site-specific metals per QAPP	1 sample per location per cross-section: Day *0 & ~~28~~ 60*	Laboratory (SW 846 6010, 1311, & 7470)
5. Windrow compost	Temperature	Daily: before & after turning	Field SOP 1.0 in Appendix D
6. Windrow compost	Moisture	Three times per week and directly after moisture addition	Field SOP 1.0 & 2.0 in Appendix D
7. Windrow compost	pH	One time per week	Field SOP 1.0 & 2.0 in Appendix D
8. Windrow compost	Oxygen	Daily: before & after turning	Field SOP 1.0 in Appendix D
9. Storm water	Per NPDES	After heavy rainfall ***or per the NPDES Permit***	Laboratory (various)
10. Decon/wash water	Per POTW influent requirements	As required for disposal	SW846 8330 & POTW parameters

Notes:
1. Complete sampling and analysis procedures and details are provided in the Biofacility Pilot Scale QAPP.

9.3 PRE-EXCAVATION SITE SAMPLING

This task has three specific objectives:

Objective 1: Identify areas for pilot scale excavation. Analyze the soil, primarily in the vicinity of Building 153 or Building 158 (backup in case Building 153 cannot be used during the Pilot scale) for explosives. Additional excavation at Mine Fill A will be completed during Full Scale Operations. This data will also be used as "entry " or "startup" concentrations for composting.

Objective 2: Determine if site-specific waste products are present. Site specific VOCs are methylene chloride, acetone, methyl ethyl ketone, methyl isobutyl ketone, toluene, and xylene. Site specific metals are barium, cadmium, chromium, and lead. These constituents will serve as indicators of the presence of residual paint wastes or rotary grit blasting waste.

Objective 3: Determine if soil is hazardous with respect to metals and TCLP list VOCs. Soil will not be accepted into the Biofacility for treatment if it is hazardous with respect to these constituents.

These three objectives will be met by collecting soil samples in a general area where high levels of explosives have been previously detected (in Figure 1-2). Soil samples will be collected and analyzed for explosives; site-specific VOCs and metals; TCLP-metals; and TCLP list VOCs. This data will assist in identifying areas for Pilot scale excavation. This data will not be used to define the extent of contamination.

9.3.1 Sampling Areas

Primary sampling areas will be designated north and northeast of Building 153 (in Figure 6-1). These areas encompass an earthen berm around Building 153 which is contaminated with explosives, based on previous sampling results. Additional sampling areas, north and east of the turn-around road will be gridded using a 20-foot spacing. Areas around Building 158 will also be sampled, if necessary, to meet the 200 cubic yard requirement for excavation.

Grid layout and boundaries will be affected by the presence of buildings, utilities, etc. Grid borders will be flagged in the field, and areas will be chosen which will be accessible by heavy equipment (i.e. individual grid blocks will not be placed in the midst of heavy utilities or surface structures). Grid blocks are not expected to be perfectly square (i.e. those in the berm), but should roughly represent a 20-foot by 20-foot area. Assuming two feet of soil will be excavated, each 20-foot by 20-foot area or "grid block" may represent approximately 30 cubic yards of soil.

9.3.2 Soil Sampling

Soil samples will be collected from each grid block or sampling area shown in Figure 6-1. Five grab samples will be collected: one from the center and one from near each of the four corners of each grid block. Grab samples will be composited using a procedure which will provide a more representative sample, as explosives contamination is known to vary over short distances (U.S. EPA, 1996c). A total of two composites, one for the six-inch depth and one for the two-foot depth, will be collected per grid block. Each composite sample will be analyzed for metals (barium, total chromium, lead, cadmium), TCLP-metals and explosives. A minimum of one sample for volatile organics analysis will be collected from the center of each grid block and will not be composited.

9.3.3 Marking Grid Blocks for Excavation

Explosives data will be used to mark grid blocks or sampling areas as requiring excavation. If a grid block or sampling area shows contamination (> 30 mg/kg TNT or RDX) to a depth of three feet, the grid block or area will be marked for three feet of excavation. If a grid block or area shows contamination at the one foot depth only, the block or area will be marked for one foot of excavation. If a grid block shows no contamination at one foot nor at the two-foot depth, additional grid blocks will be sampled. Sampling will continue until enough soil is "marked" for excavation (200 cubic yards minimum for pilot scale).

9.4 POST-EXCAVATION SOIL SAMPLING

Once soil boring sampling is completed, and the results reviewed, a minimum of 200 cubic yards will be excavated for the Pilot scale test. Additional soil excavation at Mine Fill A will be deferred to the Full Scale Operations phase.

Once soil has been removed, the Pilot scale excavation at Mine Fill A will be sampled and temporarily backfilled from an approved source at Crane. The on-site borrow source has previously been sampled and approved based on analytical results which will be supplied prior to temporary backfilling operations.

The purpose of sampling the excavation is to determine the level of contamination remaining, with respect to explosives, totals of site-specific metals and site-specific VOCs. A sampling grid will be laid out along the base of the Pilot scale excavation(s), using a nodal spacing of 20 feet. Each 20-foot by 20-foot grid block will be sampled using procedures described in the QAPP for pre-excavation sampling. However, only one composite sample and one grab sample (for VOCs) will be collected from each grid block. The composite sample will be analyzed for totals of site-specific metals (barium, cadmium, total chromium and lead) and explosives, and will be collected from the 6-12 inch interval in a manner similar to pre-excavation composite samples. The grab sample will be analyzed for site-specific VOCs, and will be collected from the center of the grid block, 12-18 inches below ground surface, using a drive sampler.

Pin flags will be placed every 20 feet along sidewalls greater than one foot in depth. Samples will be collected at each pin flag location, using a drive sampler. One sample will be collected from 6-12 inches below the surface and analyzed for site-specific metals and explosives analysis. One sample will be collected from 12-18 inches below the surface for site-specific VOCs analysis.

Data generated during this activity will be used during the Full Scale Operations to guide further excavation at Mine Fill A.

9.5 Health and Safety Air Sampling

Air monitoring for particulate and harmful or explosive gases is discussed in detail in the SSHP in Appendix A.

9.6 Process Parameter Sampling

Process parameter sampling and analysis requirements are discussed in the QAPP Supplement in Appendix F.

10.0
OPERATING EQUIPMENT DESCRIPTIONS

Table 10-1 below provides a list of the major operating equipment that will be used at the excavation sites and composting facility.

TABLE 10-1
OPERATING EQUIPMENT

Equipment	Qty.	Specifications	Description/Use
Portable Soil Screener	1	Minimum 50 ton/hr capacity; screen material to 1-1/2 inches; with feed hopper and discharge conveyor	Screening contaminated soil at the excavation sites.
Semi-tractor Truck and Live Bottom Trailer	2	Minimum 48 cu. yd. capacity, conveyor rear discharge trailer. 0 to 450 cu. ft./hr.	Hauling contaminated soil from the excavation site to the composting facility. Hauling treated material to the disposal site.
Hopper/Conveyor System	1	150 ton/hr capacity.	Self powered side discharge conveyor for loading soil onto windrow; towed by Live Bottom Trailer.
Backhoe/Loader	1	3 - 4 cu. yd. bucket loader	Excavating material, loading screen, and loading trucks at the excavation sites.
Steer Skid Loader	1	½ to 1/3 cu. yd excavator	Excavating material in areas of limited access and cleaning isles between windrows.
Grinder/Mixer	1	700 cu.ft. capacity tractor PTO driven, Grinder/Mixer with side discharge conveyor	Grinding and mixing of amendments prior to forming windrow
Tractor	1	Agricultural farm tractor with loader, bale handler and spear attachments	Moving and unloading bales & manure, towing grinder/mixer unit.
Center Pivot Wheel Loader	1	6-7 cu. yd. bucket center pivot loader with claw attachment	Loading amendments into grinder/mixer, and unloading windrows into Trucks and adjusting shape of windrows.
Water Tank Truck	1	1000 gallon (minimum)poly tank, truck mounted with valve and pump	For collecting and transporting decon liquids to site treatment facility or to compost buildings
Water Tank - Stationary	1	1500 to 2000 gallon poly storage tank with discharge valve	For storage of decon fluids awaiting analytical results.
Portable High Press Spray Wash Unit	1	1500 to 2400 psi portable gas powered spray wash unit.	For decontamination of trucks, equip., and rocks at the excavation site.
Portable Suction Pumps	3	50 gpm self priming suction pump	For pumping out building, decon facility, and storm water retention pond sumps.
Composter	1	Self-propelled, 20 foot windrow straddle type composting machine	Forming and turning windrows.
Explosives-contaminated Water Pumper Truck	1	Truck mounted 1000-gallon minimum steel tank with pump.	Transporting accumulated liquids to on-site treatment facilities

Additional equipment shall be leased as needed for short-term assignments. To minimize downtime of equipment, the program will include a schedule of important preventative maintenance tasks and lists of any critical spare parts. Daily, weekly, monthly, and periodic maintenance requirements for the major pieces of equipment are provided in Appendix G. Each major equipment operation and maintenance manual will be consulted for details.

11.0
QUALITY CONTROL

As prime contractor, MK will implement and ~~retain full authority of the Quality Control Plan (QCP) for this project. The QCP is a separate bound document and is found in Appendix H and is to be used in conjunction with this Operational Plan. MK will~~ manage all matters involving Quality Control performed in the execution of NAVFACENGCOM Delivery Orders. This approach provides the U.S. Navy with a quality management system having clear lines of authority and responsibility, and a consistent approach and application of quality requirements.

The QCP identifies quality testing and inspection requirements for the scope of work to be performed. To supplement the information contained therein, Appendix G of this Work Plan provides Field Inspection Checklists for general and specific items when performing inspections. ***The QCP is found in Appendix H.***

In addition, the NSWC EPD personnel will perform quality checks and inspections of the Contractors work and operation based on the approved Operational Plan. The U.S. EPA also retains the authority to perform quality checks and inspections.

12.0
WASTE MANAGEMENT

(NOTE: The original text was all deleted)

The U.S. Navy EPD Representative shall coordinate all waste management and disposal. The Contractors must comply with all U.S. Navy EPD requirements for management of any solid wastes, hazardous wastes, or contaminated

13.0
ENVIRONMENTAL PROTECTION

(NOTE: Most of the original text was deleted)

13.1 INTRODUCTION

All work will be done in a way that minimizes pollution of the air, the water, and the land. Within applicable regulatory requirements, noise and the disposal of solid waste materials and other pollutants will be controlled to protect human health and the environment.

The Pilot Scale Operation is divided into two areas; SWMU 12/14, Mine Fill A excavation and the Bioremediation Facility. These areas are described in Sections 1.3 and 5.0 of this Plan.

13.2. Dust Control

All excavations, stockpiles, access roads, and other work areas will be maintained free from excess dust to avoid causing a hazard. Dust at the site will be controlled with a wetting spray **from a potable drinking water source**.

13.3. Erosion and Sediment Control

Temporary erosion control measures, in accordance with the site's Pollution Prevention Plan, will be used in excavation areas until permanent surface drainage is reestablished. The amount of bare soil exposed at any time is not expected to exceed three acres, and the excavations will be protected when work is not in progress.

All erosion control structures in excavation areas are to be built to conform to site-specific conditions. Generally, erosion control structures will consist of berms, ditches, sumps or straw bale dikes. These structures will be maintained as often as required to ensure that sediment is minimally permitted to migrate and surface water is not allowed to enter or exit exclusion zones. Water contained and collected within the exclusion zones will be pumped to on-site storage tanks and handled as stated in Appendix E, Section 3.0.

The Bioremediation Facility will utilize two-lined retention basins to control surface/storm water. Water collected in the basins will be sampled and analyzed for discharge requirements. Details of the retention basin system are described in Section 5.6.

14.0
RECORDS AND RECORDING

Field personnel will generate and maintain detailed records of all site activities beginning with equipment and material receipt. A daily project logbook will be maintained on-site to document all relevant activities. General narrative descriptions of field activities will be included in the logbook along with any sketches needed to document field decisions. Field personnel will be responsible for ensuring that the log is current and thoroughly accounts for work accomplished.

In addition to the project log, pertinent data forms are prepared for accumulation of operating and monitoring data associated with both the composting and excavation portions of the project. The data forms will be used primarily to record monitoring information. The forms will be maintained in a three-ring binder in the office trailer at the Bioremedation Facility. Examples of the reporting forms are provided in the various Field SOPs in Appendix ~~D~~ F. Additional forms may be amended to this plan as developed during the Pilot Scale test.

The general information recorded for each windrow will include: soil source, date excavated, and date placed, mix number, amendment quantities and types, moisture added, windrow dimensions, etc. Complete monitoring and sampling data will also be recorded for each windrow. Dates, locations, and results will be recorded for laboratory analyses and process parameter monitoring, including all items in Table 9-1. The windrow turning schedule and ambient temperature, wind, and humidity will also be recorded.

After the treatment of a windrow is complete, the date of removal and the general location of the interim storage area will be recorded on an Interim Storage Form (Appendix ~~D~~ F). Reports will be generated as required by the Navy and regulatory agencies such as:

- Draft Pilot Scale Report - This report will include a summary of pilot scale operations, process adjustments, survey maps of the excavation area and field sample locations, temperature, moisture, and oxygen profiles, explosives degradation vs. time graphs, any approved deviations from the operational plan, analytical results summary, conclusions, and full scale operation recommendations.

- Final Pilot Scale Report - This report will include any additional information and revisions required to the Draft Pilot Scale Report for reporting the results and full scale recommendations.

- Initial Batch Report - This draft report will include the analytical and process data, operation summary and conclusions for the completion of the first batch of soil composting from Mine Fill A.

- Interim Progress Reports - These reports will include a summary of operations and analytical results, cubic yards of soil processed, process adjustments, etc., and will be submitted upon completion of the clean soil test and the contaminated soil tests.

- Daily Reports - These reports will include a summary of daily operations; monitoring logs; temperature, moisture, oxygen, and any other process parameter results; and analytical results upon receipt from the laboratory. The Daily Reports will be legible and faxed ~~at the end of the~~ ***by 10:00 am the following*** business day to the U.S. Navy and **the** U.S. EPA.

- Photographic Documentation - Documentation will include color photographs and videos of the various stages of excavation, transportation, windrow formation, monitoring, windrow completion, and compost interim storage.

15.0
SITE SAFETY, HEALTH, EMERGENCY RESPONSE AND CONTINGENCY PLAN

15.1 SITE SAFETY AND HEALTH PLAN

The project's life cycle safety and health management, emergency preparedness and prevention, contingency planning and emergency procedures is established and is planned to be maintained in the Task-Specific SSHP. A special pilot scale SSHP document has been prepared which presents the initial industrial hygiene air monitoring and sampling campaign requirements and is provided in Appendix A.

After pilot scale, a full-scale operation SSHP will be prepared that includes all follow-on air monitoring and sampling campaign requirements and any specifics including lessons learned on process, equipment and operational changes. Minor revisions to the plan may be necessary in the areas of personnel decontamination (Section 10 of the SSHP), Emergency Response Plan and Contingency Procedures (Section 12 of SSHP), Spill Containment (Section 16 of the SSHP), and the Activity Hazards Analysis (AHA) worksheets found in Attachment A of the SSHP in Appendix A. New information will also be added on safety and health requirements applicable to the on-site laboratory trailer.

Weekly inspection checklists are provided in Table 5 of the SSHP in Appendix A. AHA worksheets may be revised based on field experience of Pilot Scale operation.

15.2 AIR MONITORING

Industrial hygiene air monitoring and sampling are described in Section 7.0 of the SSHP document. During excavation work, the presence of volatile organic compounds (VOCs) will be identified using a photo-ionization detector (PID) instrument. Further identification and quantification will be completed where necessary using colorimetric indicator tubes. VOCs are not expected to be a concern. During composting, indicator tubes will be available to assess ammonia, carbon dioxide, carbon monoxide, formaldehyde, hydrogen sulfide, nitrogen dioxide and nitrous fumes inside of the composting building. Ammonia is the only compound expected to be present that may be of concern. The levels of ammonia ***may be high during the first several days of the testing phase, and*** most likely will not exceed occupational exposure limits ***later during the study due to complete mixing and degradation. It*** ~~but~~ can be present in concentrations that can cause upper respiratory irritation.

Airborne dust levels from fugitive emissions will be measured and assessed using a direct reading, real-time aerosol monitor. With engineering and administrative controls in place for dust, fugitive emissions are not expected to be a problem. ~~*The work site and the perimeter will be monitored on a daily basis.*~~

A combustible gas/oxygen/toxic gas meter will be used to evaluate conditions prior to entering confined spaces, excavations, and other areas deemed appropriate by the SSHO. This instrument will have a readout and alarm for lower explosive levels (10% methane), oxygen level in percentage, as well as carbon monoxide toxic gas detection. This instrument, along with the colorimetric indicator tubes, will provide initial qualification and quantification of atmospheric conditions in each compost building.

15.3 AIR SAMPLING

The pilot scale industrial hygiene time integrated air sampling campaign will assess potential airborne occupational exposure to chemical and biological agents and will include both personal and area samples. Air sampling results will provide the basis for PPE upgrades or downgrades, assessment of engineering controls, and the need for any special administrative controls. Constituents include organics, metals, explosives residue as airborne aerosols, and biological agents.

Time-integrated air sampling for hydrocarbons will be completed in accordance with NIOSH Methods 1500, 1501, and 1003. ~~During composting, two area samples for each method will be obtained inside of the composting building and outside (representing background).~~ See Section 7.3.1 of the SSHP for materials and methods, and sampling strategy.

Time integrated air samples for metals will be completed in accordance with NIOSH 7300. ~~Two personal samples will be obtained during soil excavation and screening tasks. Two personal samples will be obtained from the windrow machine operator and two area samples will be obtained inside of the composting structure.~~ See Section 7.3.2 of the SSHP for material and method and sampling strategy.

Time integrated air samples for explosive residues as airborne aerosols will be completed based on OSHA 44 Method with laboratory analysis in accordance with EPA 8330 Method. ~~Six personal samples will be obtained during soil excavation and screening tasks. Six personal samples will be obtained from the environmental technician. Six area samples will be obtained inside of the composting structure.~~ See Section 7.3.4 of the SSHP for material and method and sampling strategy.

Time integrated air samples for bioaerosols will be completed using a high volume sampling pump, two stage impactor and culture dishes filled with growth media for bacteria and for fungi (molds and yeast). The bacteria culture dish will be subcultured for analysis of E.coli using velvetten impression. ~~Six area samples for each analysis category will be obtained inside of the structure and six samples for each analysis category will be obtained outside of the structure (representing background). Inside structure samples will be obtained shortly after the windrows are mixed and approximately one week into the composting process.~~ See Section 7.3.4 of the SSHP for material and method and sampling strategy.

~~During composting, dip slide samples may be obtained from water accumulated in the building sump and analyzed for biologicals. Also, contact slide samples may be obtained from any assumed fungal growth on building components and analyzed for biologicals. See Section 7.3.4 of the SSHP.~~

Wipe sampling will be performed randomly throughout the pilot scale operations to assess effectiveness of the personnel decontamination operation. ~~Random wipe samples will include the insides of personnel protective equipment, clean side change rooms, and the lavatory and lunchroom areas.~~ Metals and explosive residues will be tested. Details are provided in the SSHP, Section 7.3.5.

15.4 NOISE MONITORING

Noise levels will be monitored ***as part of the Pilot Scale operations***. ~~at the start of each task and monthly thereafter, or when there is a change in equipment or job layout.~~ A Type 2 sound level meter will be used to assess potential occupational noise exposures.

15.5 EXPLOSIVE CONTAMINATED MATERIAL HANDLING

The Contractor shall comply with all requirements and recommendations from the U.S. Navy concerning management of explosive contaminated materials. Recommendations from the Hazard Analysis report must be implemented. Several pieces of machinery may have to have explosive containment or other devices attached to or near the equipment to satisfy the recommendations. If this occurs, the equipment may be shut down for a retrofitting between the clean soil and the contaminated soil composting periods.

16.0
DEMOBILIZATION

Demobilization of the site facilities will occur at the conclusion of the project (full scale operation). It is assumed that the elements of demobilization described in this section may change by the time the project is concluded in order to be consistent with the needs of NSWC Crane for continued full scale soil bioremediation or reuse of the facility for other purposes. For the purpose of this Pilot Scale Operational Plan, it will be assumed NSWC Crane will continue to use the facility for purposes of full scale soil treatment. Final demobilization of the facility will be discussed in the Full Scale Operational Plan.

In the unlikely event that the bioremediation treatment process is abandoned or if the facility is shut down for an extended period of time, the following demobilization activities will be performed.

16.1 EQUIPMENT

All remaining composting amendment materials not in contact with contaminated soil will be used as topsoil amendments for revegetation. All equipment used in the bioremediation facility or at the excavation sites will be thoroughly decontaminated prior to leaving the site. Each piece of equipment will be brushed clean of any loose dirt or compost material prior to entering the truck wash area at the Bioremediation Facility exit. Once inside the truck wash station, the equipment will undergo a thorough cleaning with a high-pressure, low-volume water spray. All wheels, wheel wells, vehicle undercarriages, truck beds, loader buckets, etc., will be pressure washed.

16.2 PROJECT FACILITIES

The office trailers, laboratory and shower trailers, and supplies shall be removed from the site. All hand tools, sampling equipment, and instrumentation which has come in contact with contaminated soil or compost will be decontaminated prior to leaving the site, as described in Field SOP 3.0 in Appendix D.

Once all equipment and vehicles have been decontaminated, the truck wash facility itself will be pressure washed and decontaminated. All decontamination fluids will be collected in the truck wash facility sump and sampled for analysis and disposal. Final rinsate samples and a field blank will be collected and submitted to the analytical laboratory for explosives analysis by U.S. EPA SW846 Method 8330. Additional cleaning of the wash facility will be implemented as required based on results of the rinsate sample analysis. The same procedure will be followed for the cleaning and sampling of the truck wash sump.

The interior surfaces of each building will be pressure spray washed and final rinse samples collected and tested for explosives per Method 8330. Decontamination fluids will be collected and sampled for analysis and disposal. Additional wall and floor final rinse samples will be analyzed to evaluate facility cleanliness. Additional cleaning of the buildings will be implemented as required based on rinsate sample results.

The asphalt surface will be pressure washed and final rinsed in the same manner as the truck wash and compost buildings. All wash fluids will be collected in the storm water retention ponds and sampled to determine appropriate disposal. Final rinsate samples will be collected and submitted for explosives analysis per Method 8330. The storm water retention ponds will be cleaned utilizing the same cleaning and sampling process.

The asphalt pad, buildings, truck wash facility, storm water retention ponds, utilities and sumps will be left intact for NSWC Crane use.

17.0
REFERENCES

Foster Wheeler Environmental Corporation, 1996, *Final Operations and Maintenance Plan, Bioremediation of Sites D and F Soils at Naval Submarine Base, Bangor, Washington*, Delivery Order No. 0057, Contract No. N44255-93-D-4050. April 22, 1996.

Kristoff, F.T., Ewing, T.W., and Johnson, D.E., 1987, *Testing to Determine Relationship Between Explosive Contaminated Sludge Components and Reactivity.* U.S. Army Toxic and Hazardous materials Agency, Aberdeen, MD. January 1987.

Morrison Knudsen Corporation, Approved *Quality Assurance Project Plan For Pilot Scale Operations At The Biofacility NSWC Crane, Crane, Indiana.* 1997.

Naval Surface Warfare Center, 1997. Storm Water Permit for Industrial Activities General Permit #INR00C083 11/9/94, amended 1997.

Northeast Regional Agricultural Engineering Service (NRAES), 1992, *On-Farm Composting Handbook, NRAES-54.* Ithaca, New York, 1992.

Preston, K.T., 1995a. Memorandum Thru CEWES-EE-R for CEWES-GG-Y *In-progress Review (IPR), Crane NSWC Bench Scale Compost Testing.* U.S. Army Corps of Engineers, Waterways Experiment Station, Vicksburg, MS. May 1995.

Preston, K.T., 1995b. Memorandum Thru CEWES-EE-R for CEWES-GG-Y *In-progress Review (IPR), Crane NSWC Bench Scale Compost Testing.* U.S. Army Corps of Engineers, Waterways Experiment Station, Vicksburg, MS. October 1995.

Preston, K.T., Wade, R., Ro, K.S., Seiden, S. 1996. *Bench Compost Implementation at Crane Naval Surface Warfare Center.* Technical Report EL-96-, U.S. Army Engineer Waterways Experiment Station, Vicksburg, MS.

URS, 1994, *Phase III Final Work Plan For Pilot-Scale Treatability Study of Ordinance Contaminated Soils, Naval Submarine Base, Bangor, Silverdale, Washington.* URS Consultants, INC., Seattle, Washington, September 1994.

U.S. Army Corps of Engineers(ACOE), 1992a. *Draft Part I RCRA Facility Investigation Phase III Soils Report for: Ammunition Burning Ground, SWMU #03/10 Naval Surface Warfare Center, Crane, Indiana.* U.S. Army Corps of Engineers, Waterways Experimental Station. November.

U.S. Army Corps of Engineers(ACOE), 1992b. *Draft RCRA Facility Investigation Phase II Soils Report For: Rockeye, SWMU #10/15, Naval Surface Warfare Center, Crane, Indiana.* U.S. Army Corps of Engineers, Waterways Experimental Station. July.

U.S. Army Corps of Engineers(ACOE), 1995. *Internal Draft Part 2 RFI Phase III Soils Report: Ammunition Burning Ground, SWMU #03/10 Naval Surface Warfare Center, Crane, Indiana.* U.S. Army Corps of Engineers, Waterways Experiment Station. September.

U.S. Army Environmental Center (USAEC), 1993. *Technology Application Analysis: Windrow Composting of Explosives Contaminated Soil at Umatilla Army Depot Activity Hermiston, Oregon.* September 1993.

U.S. Environmental Protection Agency (U.S. EPA), 1993a. *Seminar on Technologies for Remediation Sites Contaminated with Explosive and Radioactive Wastes, EPA/625/K-93/001.* June.

U.S. Environmental Protection Agency, 1993b. *Approaches for the Remediation of Federal Facility Sites Contaminated with Explosive or Radioactive Wastes, EPA/625/R-93/013.* September.

U.S. Environmental Protection Agency, 1993c. *Remedial Investigation of Site D at Naval Submarine Base Bangor, WA,* Federal Environmental Restoration Conference Proceedings.

U.S. Environmental Protection Agency, Region 3, 1994a. *Risk Based Concentration Table, Fourth Quarter 1994.* Roy L. Smith, Senior Toxicologist (3hw13), U.S. EPA Region 3.

U.S. Environmental Protection Agency, 1994b. Tech Trends: *The Composting Alternative to Incineration of Explosives Contaminated Soils,* EPA 542-N-94-008, November, 1994.

U.S Environmental Protection Agency, 1995. Memorandum: *Response to January 3, 1995 Letter.* Michael Shapiro, Director, Office of Solid Waste

U.S. Environmental Protection Agency, Region 9, 1996a. *Region 9 Preliminary Remediation Goals (PRGs) 1996.* Stanford J. Smucker, Ph.D., Regional Toxicologist (H-9-3), Technical Support Team.

U.S. Environmental Protection Agency, 1996b. Memorandum: *Remedy Selection For Explosives Composting Treatment.* Harry Craig, Remedial Project Manager, Region 10. April 1996.

U.S. Environmental Protection Agency, 1996c. EPA Federal Facilities Forum Issue; *On-site Analytical Methods And Field Sampling For Explosives In Soil.* A. B. Crockett, H. D. Craig, T. F. Jenkins, and W. E. Sisk. Draft Version 6, May 1996.

Weston, 1991. *Final Report; Optimization Of Composting For Explosives Contaminated Soil, Report No. CETHA-TS-CR-91053.* U.S. Army Corps of Engineers, November, 1991.

Weston, 1993. *Windrow Composting Demonstration for Explosives-Contaminated Soils at the Umatilla Deport Activity Hermiston, Oregon, Report No CETHA-TS-93043.* Roy F. Weston, Inc. August.

APPENDIX A

PILOT SCALE SITE SAFETY AND HEALTH PLAN

TASK-SPECIFIC SITE SAFETY AND HEALTH PLAN

PILOT SCALE

SOILS BIOREMEDIATION FACILITY

NSWC CRANE
Crane, Indiana

~~June 6, 1997~~ *August 14, 1997*
Revision 5 *6*

CONTRACT #N62467-93-D-1106
DELIVERY ORDER #0009
STATEMENT OF WORK #0007

Prepared For:

SOUTHERN DIVISION
NAVAL FACILITIES ENGINEERING COMMAND
P. O. Box 190010
2155 EAGLE DRIVE
NORTH CHARLESTON, SOUTH CAROLINA 29419-9010

Prepared By:

MORRISON KNUDSEN CORPORATION
2420 MALL DRIVE
CORPORATE SQUARE 1 - SUITE 211
NORTH CHARLESTON, SOUTH CAROLINA 29406

TABLE OF CONTENTS

Section **Page**

1.0 INTRODUCTION A-6
1.1 WORK TASK SUMMARY A-6
1.2 CONTAMINANT CHARACTERISTICS A-6
1.3 REFERENCES A-7

2.0 SAFETY AND HEALTH HAZARDS SUMMARY A-9
2.1 OVERVIEW A-9
2.2 ACTIVITY HAZARD ANALYSES A-9
2.3 CHEMICAL HAZARDS A-10
2.4 BIOLOGICAL HAZARDS A-10
2.5 CONSTRUCTION SAFETY HAZARDS A-10
2.5.1 Physical Hazards A-10
2.5.2 Noise A-10
2.5.3 Adverse Weather Stress A-10
2.5.4 Excavations A-11
2.5.5 Hazardous Energy Control (Lockout/Tagout) A-12
2.5.6 Fire and Explosion A-12
2.5.7 General Motor Vehicle, Hand and Power Equipment Safety . A-13
2.5.8 Vehicular Traffic and Work-Site Control Hazards A-13
2.5.9 Access and Haul Roads A-14

3.0 RESPONSIBILITIES AND AUTHORITIES SUMMARY A-15
3.1 MK PROJECT MANAGER (PM) A-15
3.2 MK GENERAL SUPERINTENDENT AND JOB SUPERVISORS A-15
3.3 MK CERTIFIED INDUSTRIAL HYGIENIST (CIH) A-16
3.4 MK SITE SAFETY AND HEALTH OFFICER (SSHO) A-16
3.5 SUBCONTRACTOR PERSONNEL A-16
3.6 NEAREST EMERGENCY MEDICAL FACILITY A-16

4.0 TRAINING REQUIREMENTS SUMMARY A-18
4.1 HAZARDOUS WASTE OPERATIONS TRAINING A-18
4.2 SITE SPECIFIC TRAINING A-18
4.3 RESPIRATORY PROTECTION TRAINING A-19
4.4 HAZARD COMMUNICATION TRAINING A-19
4.5 CPR/FIRST AID AND BLOOD BORNE PATHOGENS A-19
~~4.6 DEPARTMENT OF TRANSPORTATION (DOT) HAZARDOUS MATERIALS~~ A-20
4.~~7~~ **6** SAFETY MEETINGS A-20
4.~~8~~**7** PLAN OF THE DAY (POD) MEETINGS A-20
4.~~9~~**8** PRE- AND POST-ENTRY BRIEFINGS (MEETING) A-20
4.~~10~~**9** QUALITY CONTROL PREPARATORY PHASE INSPECTION MEETING A-21
4.~~11~~**10** RECORDKEEPING A-21

TABLE OF CONTENTS

Section		Page
5.0	MEDICAL SURVEILLANCE PROGRAM REQUIREMENTS	A-22
5.1	SUMMARY	A-22
5.2	DRUG ABUSE PREVENTION PROGRAM	A-23
5.3	RECORDKEEPING	A-23
6.0	PERSONAL PROTECTIVE EQUIPMENT	A-24
7.0	MONITORING AND SAMPLING	A-26
7.1	GENERAL	A-26
7.2	MONITORING	A-26
7.2.1	Volatile Organic Compounds	A-26
7.2.2	Airborne Dust	A-27
7.2.3	Perimeter Monitoring	A-27
7.2.4	Noise Monitoring	A-28
7.2.5	Heat Stress and Cold Stress Monitoring	A-28
7.2.6	Carbon Dioxide, Hydrogen Sulfide, and Other Chemical Monitoring	A-29
7.3	AIR SAMPLING	A-29
7.3.1	Organic Compounds	A-29
7.3.2	Metals	A-31
7.3.3	Explosives Residues	A-31
7.3.4	Biological Hazards	A-32
7.3.5	Wipe Sampling for Explosives Residues and Metals	A-34
7.4	AIR MONITORING AND SAMPLING REQUIREMENTS	A-34
7.5	RECORDKEEPING AND CHAIN OF CUSTODY	A-34
8.0	GENERAL SAFETY RULES AND PROCEDURES	A-36
8.1	GENERAL	A-36
8.2	RULES AND PROCEDURES	A-36
9.0	WORK ZONES	A-39
9.1	EXCLUSION ZONE (EZ)	A-39
9.2	CONTAMINATION REDUCTION ZONE (CRZ)	A-40
9.3	SUPPORT ZONE (SZ)	A-40
9.4	WORK ZONE CONTROLS	A-40
10.0	PERSONNEL AND EQUIPMENT DECONTAMINATION AND HYGIENE PROCEDURES	A-42
10.1	EMERGENCY PERSONNEL DECONTAMINATION	A-42
10.2	PERSONNEL DECONTAMINATION	A-42
10.3	EQUIPMENT DECONTAMINATION	A-43
10.4	WASHING FACILITIES	A-43
10.5	DECONTAMINATION WASH WATER	A-43
10.6	SANITATION AND PERSONAL HYGIENE	A-43

TABLE OF CONTENTS

Section		Page
11.0	ON-SITE FIRST AID AND EQUIPMENT	A-44
11.1	FIRST-AID AND MEDICAL FACILITIES REQUIREMENTS	A-44
11.2	REPORT OF FIRST AID CASES	A-44
12.0	EMERGENCY RESPONSE PLAN AND CONTINGENCY PROCEDURES	A-45
12.1	PRE-EMERGENCY PLANNING	A-45
12.2	RESPONSIBILITIES	A-46
12.2.1	Project Personnel	A-46
12.2.2	Project Manager	A-46
12.2.3	MK Certified Industrial Hygienist (CIH)	A-46
12.2.4	MK Site Safety and Health Officer (SSHO)	A-47
12.3	EMERGENCY RECOGNITION AND PREVENTION	A-47
12.4	SAFETY ZONES	A-47
12.5	SITE SECURITY AND CONTROL	A-47
12.6	EVACUATION ROUTES	A-47
12.7	EMERGENCY DECONTAMINATION	A-47
12.8	EMERGENCY MEDICAL TREATMENT AND FIRST AID	A-48
12.9	COMMUNICATIONS	A-48
12.10	CRITIQUE OF RESPONSE AND FOLLOW-UP	A-48
12.11	INITIAL REPORTING AND MANAGEMENT OF INCIDENTS	A-48
13.0	LOGS, REPORTS, AND RECORDKEEPING	A-52
13.1	SAFETY AND HEALTH LOGBOOK	A-52
13.2	REPORTS	A-52
13.3	FIELD MASTER COPY OF SSHP	A-52
13.4	RECORDKEEPING	A-52
13.5	SAFETY AND HEALTH PROJECT COMPLETION REPORT	A-53
14.0	ON-SITE WORK PLANS	A-54
15.0	COMMUNICATION PROCEDURES	A-55
15.1	RADIO COMMUNICATION, TELEPHONE, ALARMS AND DRILLS/EXERCISES	A-55
16.0	SPILL CONTAINMENT PLAN	A-56
16.1	GENERAL	A-56
16.2	PREPLANNING FOR SPILL CONTROL	A-56
16.3	SPILL AND FIRE CONTROL MATERIALS AND EQUIPMENT	A-57
16.4	SPILL CONTROL MEASURES	A-57
16.5	DRUM, CONTAINER, AND TANK HANDLING AND MOVING PROCEDURES	A-57
16.6	INITIAL REPORTING AND MANAGEMENT OF INCIDENTS	A-58

TABLE OF CONTENTS

Section		Page
17.0	CONFINED SPACES	A-61

LIST OF TABLES

TABLE		PAGE
A-1	Site Description and Contaminants	A-63
A-2	Potential Contaminants	A-64
A-3	Personnel Names and Numbers	A-68
A-4	Training Requirements	A-70
A-5	Selection of Personal Protective Equipment	A-71
A-6	Minimum Personal Protective Equipment Requirements by Task	A-72
A-7	Airborne Contaminant Response Criteria	A-73
A-8	Frequency of Physiological Monitoring for Fit and Acclimatized Workers	A-77
A-9	Monitoring and Sampling Requirements	A-78

LIST OF FIGURES

FIGURE		PAGE
A-1	Directions to the Nearest medical Facility	A-81
A-2	Safety Meeting Report	A-81
A-3	Pre-Entry Briefing Signature Sheet	A-82
~~A-4~~	~~SSHO Daily Logbook Report~~	~~A-83~~
A-5	SSHP Weekly Inspection Checklist	A-84

ATTACHMENTS

ATTACHMENT		PAGE
A	ACTIVITY HAZARDS ANALYSIS (AHA)	A-1

1.0
INTRODUCTION

This Task-Specific Site Safety and Health Plan (SSHP) describes safety and health requirements for interim cleanup measures at NSWC Crane, specifically for pilot scale operations conducted at Solid Waste Management Unit (SWMU) 12/14 and the Soils Bioremediation Facility. This SSHP is consistent with requirements of the Occupational Safety and Health Administration's (OSHA) Hazardous Waste Site Regulations; 29 CFR 1910.120 and 29 CFR 1926.65; and the U.S. Army Corps of Engineers (ACOE) *Safety and Health Requirements Manual* EM 385-1-1, dated September 1996. This SSHP is applicable to all personnel who enter work areas described in this SSHP and who are under the control of Morrison Knudsen Corporation (MK) or MK's Subcontractors.

1.1 WORK TASK SUMMARY

SWMU 12/14 Mine Fill A - Excavation, removal, and screening (includes rock washing) of approximately 200 cubic yards of explosives-residual contaminated soil, transport to the Bioremediation Facility, soil sampling, decontamination, and site restoration. Table A-1 provides a summary on site description and contaminants.

Soils Bioremediation Facility - Explosives contaminated soil will be received at this facility from SWMU 12/14. The contaminated soil will be processed by mixing with amendments and composting in covered structures. Support subsystems include decontamination facilities; storm water diversion and retention controls; and office and laboratory trailers. Amendments that will be mixed with the contaminated soils include alfalfa and animal manures, sawdust, wood chips, straw, and potato waste in various recipes. Amendments will be loaded into a grinder/mixer and will ~~*either*~~ be ~~*stored or*~~ discharged ~~*directly*~~ into the composting building for formation of the windrows (refer to the Pilot Scale Operational Plan).

1.2 CONTAMINANT CHARACTERISTICS

The potential contaminants are summarized below. Material Safety Data Sheets (MSDSs) or National Institute for Occupational Safety and Health (NIOSH) Pocket Guides will be used as a source of information for each contaminant. MSDS and NIOSH information for each of the potential contaminants, process chemicals, or other chemical substances encountered during the interim cleanup process will be organized into a separate binder, commonly called the "MSDS Binder." These binders will be available to all personnel, at anytime, and will be at appropriate on-site locations including the MK job-site trailer and NSWC Medical Building. Additional information concerning potential contaminants is presented in Table A-2. The potential contaminants contained in the soils to be received at the Soils Bioremediation Facility are summarized below.

SWMU 12/14 Mine Fill A - Soil containing residues of TNT, HMX and RDX, and explosive-contaminated wastewater are present at the excavation site. Concentrations of individual constituents in the soil ranged from undetected to 15,300 mg/kg (Halliburton NUS, 1992). Halliburton NUS 1992 also reports other chemicals of concern to include, bituminous asphalt, micro-crystalline wax, toluene, naphtha, coal-tar naphtha, methylethylketone, and aluminum. In the same report, they report hazardous waste potentially generated at Mine Fill A to include Sludge containing explosives, pink water (TNT containing), grit blast residue (cadmium, chromium, lead, barium), paint waste (metals and hydrocarbons to include halogenated, aromatic, ketone and alcohol), and spent carbon. Follow-on soil sampling and subsequent analysis for soils representing the initial 200 cubic yards to be composted confirmed HMX, TNT, and RDX contamination. Total metals reported include barium, cadmium, chromium and lead in low mg/kg concentrations. TCLP metals were undetected in the majority of the sampling runs. Volatile organics were undetected or estimated to be in the low microgram/kilogram levels.

1.3 REFERENCES

American Conference of Governmental Industrial Hygienists (ACGIH), 1996-1997. *Threshold Limit Values for Chemical Substances and Physical Agents and Biological Indices.*

Halliburton NUS, 1992. *Final RCRA Facility Investigation Phase I EMR SWMU 19/00, 08/17/12/14, and 13/14, NSWC Crane, Indiana.* August.

Morrison Knudsen Corporation (MK), 1995. *Safety Procedures and Guidelines Manual.* November.

MK, EC&E Group, 1994a. *Industrial Hygiene Procedures Manual.* Rev. 0. April.

MK, 1996. *Accident Prevention Plan For Naval Facilities Engineering Command Southern Division,* Prepared by Morrison Knudsen under contract N62467-93-D- 1 106. Rev. 1. November.

MK, 1994c. *Safety and Health Program Description for Hazardous Waste Operations.* Rev. 1. September.

MK, 1995d. NAVFAC SouthDiv Project Procedures:
PHSP 01.1, Hazardous Energy Control (Lockout/Tagout), 3/15/96.
PHSP 02.1, Emergency Response, 3/15/96.
PHSP 03.1, Spill Response, 3/15/96.
PHSP 04.1, Incident Reporting, 3/15/96.
PHSP 05.1, Excavations, 5/21/96.

MK, 1994e. *White Paper on Composting Technology*. December.

MK, 1997. *Pilot Scale Operational Plan for Soils Bioremediation Facility*. Revision 4. April.

NIOSH/OSHA/USCG/EPA, 1985. *Occupational Safety and Health Guidance Manual for Hazardous Waste Site Activities*. DHHS (NIOSH) Publication No. 85-115. October.

NIOSH, 1994. *Pocket Guide to Chemical Hazards*.

Naval Energy and Environmental Support Activity (NEESA), 1983. *Initial Assessment Study of NSWC, Indiana; NEESA 13-0003*, NSWC Crane, Indiana. May.

OSHA, 1996. *Limits for Air Contaminants*, Title 29 CFR Part 1910 Section 1000, Table Z-1, July 1, 1996.

U.S. Army Corps of Engineers (ACOE), 1992. *RFI Phase II Soils Report for Rockeye, SWMU 10/15, NSWC Crane, Indiana*. IN5 170 023 498. July.

2.0
SAFETY AND HEALTH HAZARDS SUMMARY

2.1 OVERVIEW

Hazards at this site include construction safety hazards associated with heavy equipment operation; soil excavation, potential contact with underground utilities and undermining of structural supports in Mine Fill A; inclined walking and working surfaces; traffic control including haul road layout; energy control (electrical and other kinetic energy sources) or other utility lines; site restoration including backfilling and compaction; eye/head/feet physical hazards; and heat and cold stress.

During pilot scale operations, the potential risk of acute exposure to the chemical contaminants listed in Table A-2 is considered low if the engineering controls, administrative controls, and personal protective equipment (PPE) requirements are strictly adhered to. The highest health risk chemical contaminant~~s are~~ ***is*** ~~TNT, HMX and RDX~~. ***Ammonia.*** These chemicals can present health hazards in the form of airborne aerosols and by direct contact. Health hazards of metals as an airborne aerosol is considered low. Potential health hazards involving hydrocarbons, ~~and other~~ inorganic***s, and other*** gases and vapors are also considered low. Potential biological hazards may include airborne bioaerosols such as bacteria, molds, yeast, and fungi. The health hazard potential is considered moderate based on published results of air sampling campaigns at sewage sludge, leaf, and municipal waste composting facilities.

The Soils Bioremediation Facility processing equipment has been designed and will be operated to minimize dust releases, and safeguarded to prevent employee contact with rotating equipment.

2.2 ACTIVITY HAZARD ANALYSES

AHA have been prepared for each anticipated task in accordance with EM 385-1-1, September 1996 (ACOE, 1996). These hazard analyses are in the form of worksheets contained in Attachment A of this SSHP. Each site activity shall be reviewed by field supervision, namely the MK Site Safety and Health Officer (SSHO) and MK General Superintendent prior to starting work to determine if the prepared AHA adequately addresses the planned activity. If the prepared AHA requires revision or a new task is identified, additional hazard analysis will be prepared as needed. A new AHA worksheet shall be field prepared by the MK SSHO before the activity takes place. The Pre-Entry Briefing meeting is utilized to review the AHA and is conducted with all affected workers by the Superintendent.

2.3 CHEMICAL HAZARDS

The potential chemical contaminants, their exposure limits, sign and symptoms of overexposure, and first aid requirements are presented in Table A-2.

2.4 BIOLOGICAL HAZARDS

Each work area will be approached with caution and assessed for insect, snake and biohazard plant life. Potential biological bioaerosol hazards includes bacteria, molds, yeast and fungi which may be present in airborne concentrations greater than background at the Bioremediation Facilities during the composting process.

2.5 CONSTRUCTION SAFETY HAZARDS

2.5.1 Physical Hazards

Physical hazards on this project include the use of heavy equipment including haul trucks, backhoe and loader, screener, grinder, windrow turner and other process equipments; and tripping and slipping from walking and working surfaces. Project personnel will receive site-specific and safety training, discussed later, to orient them to these potential hazards.

2.5.2 Noise

Operations may generate noise levels that exceed allowable limits. Hearing protection shall be provided for all field personnel, and its use is required when noise levels exceed 85 decibels A weighted network {dB(A)} steady state or 140 dB(A) impulse, regardless of the duration of exposure. Hearing protection will be provided to all field personnel. A comprehensive Hearing Conservation Program will be implemented when noise levels equal or exceed 85 dBA on an 8-hour time weighted average. Exposure assessments will be conducted by the MK SSHO throughout the work campaign.

2.5.3 Adverse Weather Stress

All employees are to be alert to the signs and symptoms of heat stress. Should extreme fatigue, cramps, dizziness, headache, nausea, profuse sweating, rapid pulse, or pale clammy skin occur, the employee is to immediately leave the work area, rest, cool off, and drink plenty of cool water. If the symptoms do not subside after a reasonable rest period, the employee shall notify the supervisor, who in turn will notify the MK SSHO and seek medical assistance. The MK SSHO and the site supervisor will be alert to signs of heat stress in site personnel and increase the frequency of breaks and fluid consumption as necessary.

Cold injury is classified as either localized, as in frostbite, frost nip or chilblain, or generalized, as hypothermia. In judging the cold hazard, both air temperature and wind

chill factor must be considered. The first symptoms of hypothermia are uncontrolled shivering, the sensation of being cold; the heartbeat slows and sometimes becomes irregular; the pulse weakens and blood pressure changes. Severe shaking or rigid muscles caused by bursts of energy change the body chemistry. Vague or slowed speech occurs; memory lapses, incoherence and drowsiness then occur. As core temperature continues to drop, listlessness, confusion and little attempt to keep warm commences. Pain in the extremities is felt. As exhaustion sets in, the body's ability to contract blood vessels is diminished, and rapid loss of heat and cooling begins.

Frostbite can occur without hypothermia when the extremities do not receive sufficient heat from central body stores. This can occur because of inadequate circulation and/or insulation. This condition results in damage to and loss of tissue. The most vulnerable parts of the body are the nose, cheeks, ears, fingers and toes. Damage from frostbite can affect the outer layer of skin only, or it can include the tissue beneath the outer layer. Damage from frostbite can be serious; scarring, tissue death and amputation are all possibilities. The symptoms of frostbite include: 1) The skin changes color to white or grayish-yellow, progresses to reddish-violet and turns black as tissue dies; 2) Pain may be felt at first, but subsides; 3) Blisters may appear; 4) The affected part is cold and numb; and 5) The skin has a waxy appearance.

To prevent cold stress, proper clothing must be worn. It is important to preserve the air space between the body and the outer layer of clothing to retain body heat. Refer to Section 7.2.6 for more guidance on heat and cold stress management.

2.5.4 Excavations

Open excavations and trenches present a hazard from falling into the excavation and/or side wall collapse while personnel are near or inside the excavation. To minimize exposure risk, the excavation work site will be barricaded ~~with orange snow fence~~ and signs posted. ~~*Refer to MK Project Procedure PHSP 05.1 for specific excavation requirements.*~~ The deepest excavation on this project may approach slightly more than 3 feet. OSHA 1926.650 Subpart P - Excavations and Corps of Engineers requirements (EM 385-1-1, Section 25) for sloping or shoring are not anticipated as necessary. When excavations are completed near building sidewalls and foundations, ~~*an MK engineer*~~ ***a competent excavation person*** will assess potential collapse scenarios and specify any control requirements (e.g. shoring).

Positive identification of underground utilities and services is required at least 24 hours prior to any excavation, trenching or penetrations. An Excavation and Trenching Permit application must be submitted at least seven days prior to any excavation activities. The MK Project Manager (PM) will be responsible for obtaining this permit through the NSWC Crane Public Works Department (PWD). Part of this permit process will include a UXO

survey by the NSWC representative. ~~Regardless of the size of the trench,~~ MK will have a designated competent person who will evaluate all excavations and trenches on a daily basis ~~regardless of whether personnel will enter~~. Inspections shall be recorded in a log book ~~*and*~~ ***or*** field inspection checklists.

2.5.5 Hazardous Energy Control (Lockout/Tagout)

Ground Fault Circuit Interrupters (GFCIs) will be installed on all portable electrical equipment and installations in accordance with EM 385-1-1 Section 11.C.05. All extension cords shall have GFCI protection and shall be inspected and determined to be free of cracks or frays.

Any system where the potential exists for unexpected energizing, start-up, or release of kinetic or stored energy during servicing and maintenance resulting in injury or damage shall be energy isolated in accordance with EM 385-1-1 Section 12, 29 CFR 1910.147, ~~*and PHSP 01.1*~~. The MK Site Superintendent shall be responsible for verifying adequacy of all lockout/tagout installations and notifying all affected personnel. The MK Site Superintendent has the responsibility for implementing energy control measures. The PWD will provide energy control services on Mine Fill A utilities and process equipment if necessary. MK will provide their own energy control services on Bioremediation facility equipment and processes.

In addition, energy controls apply to motorized heavy equipment and process equipments and the following requirement applies. At a minimum, during service and maintenance of motorized equipment, the key shall be removed and in possession of the service or maintenance person and a "Do Not Operate" tag signed by this person shall be displayed near the start-up controls. Pre-operational checks and maintenance requirements on process equipments, including energy control will be incorporated into checklists.

2.5.6 Fire and Explosion

An Unexploded Ordnance Survey (UXO) will be required prior to subcontractor mobilization and may continue throughout the excavation process. The UXO Survey will be conducted by NSWC personnel.

No hot work or open flames will be allowed in the work area without a Hot Work Permit obtained through the ~~*MK SSHO*~~ ***NSWC Fire Services.*** Hot Work Permitting will be coordinated through the base Fire Department. Flammable and combustible fuels for heavy equipment shall be stored and dispensed in accordance with NFPA 30, the Flammable and Combustible Liquids Code. ~~*At least two 20 lb or equivalent "ABC" multi purpose fire extinguisher shall be maintained for fire response at the entrance to each Contamination Reduction Zone (CRZ).*~~ Fire extinguishers will be located at the diesel fuel storage location and in each of the Composting Buildings. All mobile heavy equipment must be fitted with a minimum 5 lb "ABC" fire extinguisher. Any temporary trailers or

structures must have fire extinguishers installed in accordance with NFPA 10. Depending on the fire loading, in most cases a 5 lb "ABC" is sufficient in each office trailer. This extinguisher must be mounted at least four feet from the floor next to a egress door. The MK SSHO is responsible for completing monthly checks on the fire extinguishers and recording appropriately. Use of any tool that can be considered an ignition hazard where fire and explosion hazards may exist is strictly prohibited. ~~*Portable power tools shall be explosion proof in accordance with NFPA 70B and 70E, Class 1, Division 1, Group D or otherwise approved for use in potentially explosive atmospheres.*~~ .

2.5.7 General Motor Vehicle, Hand and Power Equipment Safety

The following traffic rules will apply to all motorized vehicles and equipment while on site:

- Equipment carrying waste shall always have the right-of-way within the Work Zones.
- The speed limit is 10 mph, or as posted. Exceeding the speed limit is cause for disciplinary action, including removal from the site.
- Personnel shall not ride equipment that has not been specifically designed for the transport of personnel.
- Seatbelts shall be worn at all times when operating any motorized equipment or vehicle.
- All motor vehicles and equipment including hand and power tools shall be subject to safety inspections by the MK SSHO. The MK SSHO reserves the right to reject any equipment. A "DO NOT USE" or "DEFECTIVE" tag will be placed on the equipment and documented in the MK SSHO Logbook. Corrective action will be pursued with the Superintendent.
- Daily safety checklists shall be completed by heavy equipment operators and delivered to the MK Site Project Office on a daily basis. The checklist is based on the equipment manufacturers recommended guidelines for daily checks.

2.5.8 Vehicular Traffic and Work-Site Control Hazards

Potential hazards from vehicular traffic around work areas including the Soils Bioremediation Facility will be controlled by using traffic control items such as traffic cones, flagging, barricades, and signs. Types and placement of traffic control items will be in accordance with EM 385-1-1, Section 8 and 29 CFR 1926.201 and 202. Workers required to work in active traffic ~~*areas*~~ ***paths*** or roadways will be required to wear high visibility reflective vests.

2.5.9 Access and Haul Roads

If special access and haul roads are required and constructed for this project, they will be constructed in accordance with EM 385-1-1 Section 21.I.

3.0
RESPONSIBILITIES AND AUTHORITIES SUMMARY

This section describes the roles and responsibilities of project personnel with regard to safety and health. Ultimately, responsibility for the safety and health lies with the individual. All personnel must be cognizant of the hazards and the methods of reducing the risk of injury and illness. All personnel will comply with the rules and procedures set forth in this plan and will make project management aware of any conditions which may jeopardize the welfare of project workers and/or the general public. The specific personnel names and telephone numbers of responsible persons are presented in Table A-3. Figure A-1 is the route map to the nearest medical facilities which also shows the NSWC Base layout.

3.1 MK PROJECT MANAGER (PM)

The PM is responsible for the management of all aspects of the project, including safety and health. The PM is responsible for ensuring that all project tasks receive appropriate safety and health review before commencement of field activities and that the necessary equipment and facilities are available to implement the SSHP.

3.2 MK GENERAL SUPERINTENDENT AND JOB SUPERVISORS

The MK General Superintendent and the Job Supervisor(s) are responsible for ensuring that the safety and health aspects for their particular task are addressed. They are responsible for the implementation of the SSHP in the field and for ensuring that all project personnel comply with provisions of the plan. The MK General Superintendent and Job Supervisor(s) are also responsible for notifying the MK SSHO of any changes in work conditions which may affect the safety and health aspects of the task. The MK General Superintendent is responsible for conducting Plan of the Day (POD) meetings. The Job Supervisor(s) are responsible for conducting Pre-Entry Briefings and Post Entry Briefings when required.

The Job Supervisor(s) must notify the MK SSHO and MK General Superintendent of all accidents and incidents as soon as possible. The Job Supervisor(s) shall conduct an accident investigation and record the results of the investigation on a Supervisor Accident Investigation Report form or equivalent form. The initial investigation report shall be formally transmitted to the MK Project Manager within four hours after critical management of the incident is complete. The MK Project Manager shall follow the reporting requirements described in PHSP 04.1. The MK General Superintendent shall conduct a critique of the incident with selected MK and Subcontractor personnel as soon as possible after critical management of the incident is complete. Lessons learned will then be developed by the MK General Superintendent and Job Supervisor(s) and communicated to all affected personnel.

3.3 MK CERTIFIED INDUSTRIAL HYGIENIST (CIH)

The MK CIH who is the MK Project Management Office (PMO) Health and Safety Manager is responsible for preparation of the SSHP. The CIH is responsible for making modifications to the plans and recommending changes to the work tasks if they affect safety and health. The CIH is responsible for ensuring that all required sampling/monitoring is performed and that all required safety and health documentation is maintained. The CIH may assign some tasks to the MK SSHO for implementation.

3.4 MK SITE SAFETY AND HEALTH OFFICER (SSHO)

The MK SSHO is responsible for the day-to-day implementation of the SSHP, and verification of compliance with the SSHP and all applicable occupational safety and health rules and regulations. The SSHO has the authority to suspend work at any time if there is an imminent threat to the health and safety of project workers or the general public. The SSHO shall assure the Navy's designated authority at the site is notified immediately of any accident including spills. The SSHO shall assist in the accident investigation effort and shall have final approval authority for accident reports. The MK Work Plan document describes in detail the role and responsibilities of the SSHO on this project.

3.5 SUBCONTRACTOR PERSONNEL

All Subcontractors are required to abide by the requirements of this SSHP. They are also required to comply with all applicable and appropriate federal, state, and local laws, standards, and regulations. Subcontractors must notify the MK SSHO and MK General Superintendent of all accidents as soon as possible. Subcontractors must maintain records of all first aid rendered and recordable, and lost time injuries. Subcontractors must notify the MK SSHO of any changes in work conditions which may affect the safety and health aspects of the task.

3.6 NEAREST EMERGENCY MEDICAL FACILITY

Directions to the On-Site NSWC Medical Department:

The NSWC Fire Department coordinates the on-site ambulance service. The Medical Department is located in Building 12, off of road H-2, just north of H-5. See Figure A-1.

Directions to Bedford Medical Center:

From the Bedford Gate, head east on Highway 158 to the city of Bedford, 158 turns left onto 16th Street. The distance to hospital is approximately 20 miles. This gate is open during the hours of 6 AM to 8 AM and 3 PM to 6 PM on Mondays through Fridays.

Directions to Bloomington Hospital:

Exit NSWC on road H5-45 through the Bloomington Gate, then follow Highway 45 North to Bloomington. At the intersection of Highway 45 and Highway 37, continue straight ahead and follow Bloomfield Road north until it becomes 2nd Street. Continue on 2nd Street; the hospital will be on right-hand side of the road.

4.0
TRAINING REQUIREMENTS SUMMARY

This section summarizes training requirements for project personnel. A training requirements summary is provided as Table A-4.

4.1 HAZARDOUS WASTE OPERATIONS TRAINING

All personnel entering a contamination reduction zone or exclusion zone shall have completed the initial 40-Hour Hazardous Waste Operations Safety and Health Training and three days of supervised experience pursuant to 29 CFR 1910.120(e)(3). All personnel shall receive eight hours of refresher training annually, pursuant to 29 CFR 1910.120(e)(8), as necessary. All on-site supervisors and managers shall receive an additional eight hours of specialized training pursuant to 29 CFR 1910.120(e)(4).

4.2 SITE SPECIFIC TRAINING

All personnel shall receive site-specific safety and health training prior to entering the site or commencement of work. All site employees and subcontractors, including those working in the support zone, shall receive this training. The Job Supervisor(s) are responsible for identifying personnel requiring this training and coordinated with the MK SSHO regarding scheduling of this training. The MK SSHO or designated alternate will conduct the training. Site visitors shall receive site-specific training prior to entering an exclusion zone. ~~*An abbreviated version of this training will be given to site visitors not entering an exclusion zone but whose business will be conducted unescorted in the near vicinity of the Work Zones.*~~ The format and content will be left up to the discretion of the MK SSHO. This training will cover the SSHP, but not necessarily be limited to, the following topics:

- Names of site safety and health personnel.
- Safety and health hazards present on the site and anticipated during the work campaign.
- Hazard Communication.
- PPE requirements.
- Safe work practices including drum handling.
- Engineering controls.
- Medical surveillance requirements, including recognition or symptoms and signs which might indicate overexposure to hazards.
- Decontamination procedures.
- Emergency procedures.
- Spill containment plan.
- Confined Space Entry.

- Energy Control.
- All other requirements of this SSHP.

If permit required confined space designations are made, then personnel involved with confined space entry work shall be required to have certified documented training in confined space entry procedures in accordance with the requirements of 29 CFR 1910.146. Copies of certificates must be presented to the MK SSHO prior to commencing work. Confined space entry procedures shall be implemented by the MK SSHO in accordance with MK IH Procedure 9. An MK Confined Space Entry Permit shall be posted at each work site during permit confined space entry activities. The Base Fire Department shall be notified of the location of confined space entries and expected duration at least two hours in advance of entry by the MK SSHO.

4.3 RESPIRATORY PROTECTION TRAINING

All personnel required to use respiratory protection shall have certified training in respirator use, care and maintenance pursuant to 29 CFR 1926.103 and 29 CFR 1910.134. Each individual shall be medically qualified to wear a respiratory device and have documented evidence of successfully completing respiratory training and fit testing.

4.4 HAZARD COMMUNICATION TRAINING

All personnel shall complete hazard communication training pursuant to 29 CFR 1910.1200 and 29 CFR 1926.59 regarding all potentially hazardous chemicals to which they may be exposed. MSDSs and/or NIOSH Pocket Guides for the contaminants suspected to be in the various work sites will be placed in a site MSDS Right-To-Know Binder. Copies will be maintained at each work site or some location convenient for employees to review plus a copy will be kept at the MK Project Office. Hazard Communication training will be included as part of the Site-Specific Training required in Section 4.2. When new chemicals are brought onto the work site or new chemical contaminants are identified, an MSDS and/or NIOSH Pocket Guide will be added to the MSDS Right-To-Know Binder(s) with a corresponding review by the MK SSHO and Job Supervisor(s) and if necessary, training shall be conducted with affected individuals. The MK SSHO has overall responsibility for maintenance of the MSDS database. Job Supervisor(s) are responsible for reviewing the MSDS, identifying training needs for affected workers and transmitting a copy of the MSDS to the MK SSHO.

4.5 CPR/FIRST AID AND BLOOD BORNE PATHOGENS

At least one employee on each shift shall be qualified to administer First Aid and CPR. At ~~the~~ a minimum, the MK SSHO shall be First Aid/CPR qualified. This person is also required to be trained to 29 CFR 1910.1030 (BLOOD BORNE Pathogens). ~~Trained First Aid and CPR personnel shall be identified by hard hat stickers or other means of identification.~~

~~4.6 DEPARTMENT OF TRANSPORTATION (DOT) HAZARDOUS MATERIALS TRAINING~~

~~All personnel required to classify, mark, select packaging, inspect, load and transport hazardous materials must be trained to 49 CFR 172 Subpart H. This includes personnel responsible for packaging of samples to be sent to off site laboratories for analysis. Also included are personnel responsible for completing a hazardous waste or hazardous material manifest and insuring the hazardous waste/material is properly prepared for off site shipment.~~

~~4.7~~ 4.6 SAFETY MEETINGS

Safety meetings for all MK employees shall be conducted on a weekly basis. This is a group meeting intended to be a self assessment of safety performance and a chance to review any lessons learned as a group, plus an opportunity to introduce specialized training topics. The meeting shall be chaired by the MK General Superintendent with assistance by the MK SSHO. This safety meeting can also be used to describe any changes in the Site Specific Training described in Section 4.4. Safety Meetings are documented using Figure A-2 from this plan or equivalent.

~~4.8~~ 4.7 PLAN OF THE DAY (POD) MEETINGS

Plan Of The Day (POD) Meetings shall be held at the beginning of each shift to review the planned work of the day as well as any safety and quality concerns. The meeting is chaired by the MK General Superintendent or MK PM. The attendee's include Job Supervisor, the MK Quality Control representative, the MK SSHO and other selected personnel. The date, time, personnel attending and meeting minutes shall be documented in field log-books.

~~4.9~~ 4.8 PRE- AND POST-ENTRY BRIEFINGS (MEETING)

Pre-entry briefings shall be held for employees prior to their initiating any new or differing site activity in an exclusion zone and at such other times as necessary to ensure employees are knowledgeable of the work plan activity, the Activity Hazards Analysis (AHA), and that the plan and analyses are being followed. Pre Entry Briefs are the responsibility of the Job Supervisor. Attendance shall be documented using Figure A-3 from this Plan. ~~Feedback on the AHA worksheets is highly regarded and the MK SSHO should make every effort to validate there applicability.~~

Post-entry briefings shall be held as needed to assure changes in conditions or work methods are promptly reported and addressed. In addition, all incidents will be promptly evaluated and the evaluation results will be communicated to personnel in post-entry briefings and other meetings. Lessons-learned from these evaluations shall be communicated to all affected personnel. Post Entry Briefs are the responsibility of the Job Supervisor. They are not required to be formally documented, a logbook entry is sufficient.

~~4.10~~ 4.9 QUALITY CONTROL PREPARATORY PHASE INSPECTION MEETING

The MK SSHO shall attend all Quality Control Preparatory Phase Inspection Meetings to discuss any safety and health concerns requiring special attention and to review anticipated safety requirements for a specific definable feature of work, and to review specific air monitoring required.

~~4.11~~ 4.10 RECORDKEEPING

Written records of all required training and meetings shall be maintained on site by the MK SSHO. These records shall be made available to U.S. Navy personnel upon request. Subcontractors to MK shall provide copies of training certifications along with proof of medical surveillance physical and respirator certification to the MK Project Manager or MK SSHO prior to personnel working on site.

5.0
MEDICAL SURVEILLANCE PROGRAM REQUIREMENTS

5.1 SUMMARY

All project personnel who work within the exclusion zone for more than three days per month, or are required to use respiratory protection regardless of the time within the exclusion zone, will participate in a medical surveillance program in accordance with OSHA 1910.120 and 1926.65, Section 16 from the MK Safety and Health Program Description for Hazardous Waste Site Operations (MK employees only), and as described in this section.

The medical surveillance program consists of a baseline or initial examination, an annual medical examination, a termination examination, and episodic medical examinations as necessary. Termination exams ~~*specify*~~ ***specific*** to this job have been determined to not be necessary unless specific criteria is met as discussed in the MK Safety and Health Program for Hazardous Waste Site Operations, Section 16. ~~*Note: if MK personnel require physicals or other medical surveillance in the field, the MK PM and MK SSHO shall establish a purchase order agreement with the selected medical facility and contact the Health and Safety Manager for a copy of a sample Client Profile for their use as the purchase order specification.*~~

At a minimum, the content of the initial, annual and termination examinations shall consist of the following medical tests and procedures (or as determined by the examining physician):

- Medical and occupation history.
- Complete physical examination.
- Pulmonary function test (FVC and FEV_1).
- Complete blood count, generally SMAC-22 or 24 biochemical profile.
- Audiometry.
- Complete urinalysis.
- Resting electrocardiogram.
- Vision screen.
- Chest X-ray (PA) (at the direction of the examining physician).

An episodic examination will be required if any employee develops signs or symptoms related to the possible overexposure to hazardous substances or other health hazards, if the employee has been injured, or if the employee has been exposed above the permissible exposure limits or published exposure levels in an emergency. The scope of any episodic examination will be left to the discretion of the examining physician.

A copy of the examining physician's written opinion about the employee's ability to perform work on this hazardous waste site and use respiratory protection, and a statement that the physician has informed the employee of the results of the examination shall be kept on site. Subcontractors must provide this information to the MK Project Manager or the MK SSHO prior to mobilization activities on site. For privacy reasons, these statements must not contain the specific results of medical examinations or tests.

5.2 DRUG ABUSE PREVENTION PROGRAM

Morrison Knudsen Corporation is committed to the establishment and maintenance of a safe and efficient work environment for all employees free from the effects of alcohol, illegal drugs, other controlled substances, and prohibited items.

5.3 RECORDKEEPING

The MK SSHO will manage medical surveillance records for MK employee's. The statements by the examining physician(s) attesting to the medical qualification of individual workers shall be maintained at the project site and will remain a part of the project files.

6.0
PERSONAL PROTECTIVE EQUIPMENT

In addition to engineering controls and administrative controls (e.g. work practices), Personal Protective Equipment (PPE) (a.k.a. Chemical Protective Clothing) shall be used to protect personnel from exposure to contaminants which may be encountered during activities on site as warranted. The following guidelines will be followed:

- Respirators and other PPE necessary to protect the health of employees shall be provided by their employer.

- Only NIOSH/MSHA-approved respirators and cartridges shall be used.

- The respirator user's medical status shall be verified by the MK SSHO before work is performed requiring respirator use.

- MK IH Procedure 14.0 shall serve as the written standard operating procedure governing the use of respirators at the job site. Section 10 from MK Safety and Health Program Description for Hazardous Waste Operations shall serve as the written standard operating procedure governing the use of PPE at the job site. Safe Work Practice (SWP) 4.0, found in Section 17 of the MK Safety and Health Program Description shall serve as guidance in chemical protective clothing selection and donning/doffing procedures.

- Respirators will be assigned to individual employees for their exclusive use and marked to indicate to whom it was assigned, for the duration of this project.

Table A-5 presents the basic levels (Level B, C, Modified D, and D) of PPE.

Table A-6 lists the minimum PPE level required for each task or operation. If air sampling/monitoring indicates that modification to the levels of protection are warranted, the MK SSHO is empowered with the authority to authorize the modification based on the guidance provided in Table A-7, Airborne Contaminant Response Criteria or by professional judgement.

The PPE has been selected based on what is known or anticipated about the site specific hazards. If conditions change, PPE selection and use shall be reviewed by the MK SSHO and the General Superintendent and upgraded or downgraded per their assessment. The MK SSHO shall record the rationale for the modification as a log book entry. Personnel will be trained if necessary on the use and limitations of specific pieces of PPE prior to initiation of work by their designated Supervisors during the Pre-Entry Briefs with assistance when necessary from the MK SSHO or General Superintendent.

PPE will be maintained and stored in accordance with the manufacturer's recommendation and good industrial hygiene practices. Personnel will inspect PPE prior to each use to assure the PPE is clean and good working order. Training will be provided to personnel concerning PPE inspection criteria by their supervisors with assistance when necessary from the MK SSHO. The MK SSHO shall conduct evaluations of effectiveness and useability of PPE. Logbook entries are sufficient but the data should be readily transferable to the safety and health project completion report (see Section 13.5).

7.0
MONITORING AND SAMPLING

Air monitoring refers to direct real time reading of airborne concentrations and air sampling refers to time integrated air sampling, either personal or area samples. The MK SSHO will maintain one photo-ionizing detector (PID) with 10.2 eV lamp, a supply of colormetric indicator tubes and handpump, and one multi-gas combustible gas indicator (CGI)/ Oxygen (O_2)/ Hydrogen Sulfide (H_2S)/ Carbon Monoxide (CO) meter. In addition, the MK SSHO will maintain a sound level meter and dust aerosol meter plus all time integrated air sampling equipment. Execution of real time air monitoring will be coordinated by the MK SSHO in accordance with the requirements for air monitoring depicted in Table A-9. Time integrated air sampling will be completed by the MK SSHO.

7.1 GENERAL

This section describes the air sampling and air monitoring program performed to evaluate project worker exposure to potentially hazardous airborne materials and to evaluate off-site impacts. The air sampling/monitoring results will be used to:

- Assess worker exposure to potentially hazardous materials with respect to the Permissible Exposure Limit (PEL) for Air Contaminants (Title 29 Code of Federal Regulations, Part 1910.1000) or other published exposure levels.
- Assess the adequacy of engineering controls and respiratory protection.
- Delineate areas where controls or respiratory protection is needed.
- Establish work control zones.

7.2 MONITORING

7.2.1 Volatile Organic Compounds

A direct-reading, real-time photo-ionization detection (PID) instrument (model: PhotoVac MicroTip) capable of detecting volatile organic compounds (VOCs) will be used whenever excavation and penetration in potentially contaminated areas occurs and for general area scans in the Composting Buildings. Readings will be taken at locations that reflect approximate concentrations of organic vapors and gases in the breathing zone of excavation personnel. Results of the organic vapor and gas monitoring will be documented. If necessary, the level of PPE used by personnel will be modified. Table A-7 describes the level of PPE to be used, based on the concentration of organic vapors and gases in the breathing zone of project personnel. The direct-reading real-time organic vapor and gas monitoring equipment will be "response checked" according to the manufacturer's instructions before use each day, and calibrated yearly by the manufacturer

or other qualified personnel. Records of the response check, maintenance, and annual calibration will be maintained on-site.

Colorimetric indicator tubes (e.g., MSA tubes) for organic vapors shall be used at the MK SSHO's discretion. ~~*whenever the PID instrument measures breathing zone concentrations of organic gases or vapors exceeding 5 parts per million (ppm) PID equivalents greater than background concentrations for time period greater than five minutes or as deemed necessary by the MK SSHO.*~~ Colorimetric tubes are used to further characterize the potential exposure. Generally, the frequency of sampling with indicator tubes is driven on the monitoring results of the PID for organic compounds. Based on volatile concentrations reported in the soil sampling results, VOC's are not expected to be a problem. ~~*The MK SSHO will have available tubes for benzene, xylene, ethylbenzene, toluene, trichloroethane, and petroleum hydrocarbons.*~~

Additional compounds that ~~*will*~~ ***may*** be measured using colorimetric indicator tubes include the following: ~~*hydrogen sulfide*~~, carbon dioxide, carbon monoxide, ***and*** ammonia, ~~*nitrogen dioxide, nitrous fumes, and formaldehyde.*~~ If levels are detected above action levels, an immediate assessment of job controls will be made, and appropriate modifications incorporated if necessary. See Section 7.2.6 on measurement location and frequency.

7.2.2 Airborne Dust

A direct-reading, real-time instrument capable of detecting airborne dust ~~*(MIE Miniram)*~~ will be used, based on visible observations of excessive dust. Readings will be taken at locations that reflect approximate concentrations of airborne dust in the breathing zone of project personnel. Results of the airborne dust monitoring will be documented. If necessary, the level of PPE used by personnel will be modified or engineering controls enhanced. The direct-reading, real-time monitoring equipment will be "response checked" according to the manufacturer's instructions before use each day, and calibrated by the manufacturer or other qualified personnel yearly. Records of the response check, maintenance, and annual calibration will be maintained on-site. When such monitoring is conducted and the results are greater than 10 mg/m^3 total dust concentrations, immediate steps will be taken to determine the cause and modify site operations.

7.2.3 Perimeter Monitoring

Perimeter monitoring to evaluate emissions of airborne dust in the Support Zone will be performed periodically during soil excavation, as warranted. When such monitoring is conducted and results are greater than 1.0 mg/m^3, immediate steps will be taken to determine the cause and modify site operations.

7.2.4 Noise Monitoring

Noise monitoring will be performed, as warranted, at the initiation of each task or operation to determine the sound levels associated with the particular task or operation. Sound levels will be determined at locations that best approximate the sound levels at the ear of potentially affected personnel. Noise monitoring equipment will be "response checked" according to the manufacturer's instructions prior to use each day, and calibrated by the manufacturer or other qualified personnel yearly. Records of the response check, maintenance, and annual calibration will be maintained on-site.

7.2.5 Heat Stress and Cold Stress Monitoring

When temperatures at the site are above 65°F, ~~*the wet bulb globe temperature (WBGT) may be used to monitor the potential for heat stress.*~~ Work/rest periods will be adjusted according to the guidelines stated in the current edition of *ACGIH Threshold Limit Values for Chemical Substances and Physical Agents*. When the clothing worn differs from the ACGIH standard ensemble such as in the case of workers wearing semipermeable or impermeable clothing, guidelines established in the NIOSH/OSHA/USCG/EPA, Occupational Safety and Health Guidance Manual for Hazardous Waste Site Activities, Section 8 should be consulted. The following is a summary from that document.

When employees are required to wear impermeable chemical protective clothing in temperatures exceeding 70°F, employees ~~*shall*~~ ***should*** monitor **their pulse rate or** use the "buddy system" to monitor each other's pulse rate at the start of each rest period. ~~*If the pulse rate exceeds 110 beats per minute, the next work period shall be shortened by one-third without shortening the rest period. The pulse rate shall be monitored again at the beginning of the next rest period and if the pulse rate exceeds 110 beats per minute, the work period shall again be shortened by one-third. No employee shall be permitted to continue working in PPE if his or her pulse rate exceeds 110 beats per minute continuously.*~~ Table A-9 can be used to establish work/rest periods and the frequency of monitoring pulse rates.

Guidelines for the prevention of cold stress and cold stress TLVs shall follow the guidelines stated in EM-381-1-1 Section 06.J and the current edition of *ACGIH Threshold Limit Values for Chemical Substances and Physical Agents*. At air temperatures below 50°F, the air temperature and wind speed shall be monitored by the MK SSHO qualitative assessment of cold stress risk shall be made by comparing wind speed and actual temperature to the assigned equivalent chill temperature depicted on Table 2 in the Cold Stress section of the ACGIH booklet. Unless there are unusual or extenuating circumstances, cold injury to other than the hands, feet, and head is not likely to occur without the development of the initial signs of hypothermia. These symptoms are described in Section 2.5.3. The use of extra insulating clothing

and/or reduction of the exposure period are among the special precautions which should be considered.

Cold weather clothing requirements shall follow the guidance listed in Section 06.J.09 of EM-385-1-1. If work is performed continuously in the cold at an equivalent chill temperature or below 20 °F, heated warming shelters shall be made available nearby the work area and the workers encouraged to use these shelters at regular intervals. A cold weather work/warm-up regimen shall be established when outside ambient temperature is less than a -15 °F in accordance with Table 3 of the ACGIH booklet in the Cold Stress section.

7.2.6 Carbon Dioxide, Hydrogen Sulfide, and Other Chemical Monitoring

At the Bioremediation Facilities during active composting, real-time monitoring using colorimetric indicator tubes for carbon dioxide and hydrogen sulfide will be performed periodically by the MK SSHO in the buildings housing the windrows. If carbon dioxide levels exceed 4,000 ppm inside of the structure, the structure will be evacuated and action taken to vent the structure and maintain a level below 3,000 ppm. ~~*The ceiling for hydrogen sulfide is 10 ppm. Evacuation from the structure shall occur at 5 ppm, and action shall be taken to vent the structure and maintain a level below 5 ppm. These compounds will be measured in the cab of the windrow turner machine during turning of the windrow approximately twice per week for the first two weeks. These same compounds will be measured inside of the compost buildings at two locations in the building once per day for the first week of active composting.*~~

Also during active composting, real-time monitoring will be conducted periodically to determine if any detectable levels of methane, carbon monoxide, ~~*nitrogen dioxide, nitrous fumes,*~~ ***and*** ammonia, ~~*and formaldehyde*~~ are present. Monitoring will be completed using colorimetric indicator tubes, except for methane where the multi-gas meter will be used. The multi-gas meter will also be used for hydrogen sulfide and carbon monoxide in addition to the colorimetric indicator tubes. These compounds will be measured in the cab of the windrow turner machine during turning of the windrow approximately twice per week for the first two weeks. ~~*These same compounds will be measured inside of the compost buildings at two locations in the building once per day for the first week of active composting. If detectable levels are encountered, then full-shift time integrated samples may be obtained to better quantify the occupational exposure level, and current controls (engineering, administrative and PPE) will be assessed to determine there adequacy.*~~ If levels are detected above action levels, an immediate assessment of job controls will be made, and appropriate modifications incorporated where necessary.

7.3 AIR SAMPLING

7.3.1 Organic Compounds

Time-integrated area air sampling for hydrocarbons using personal air sampling pumps will be performed by the MK SSHO during the composting process to determine what, if any, of the hydrocarbon constituents may be present and there levels. Sample collection and analysis will be completed in accordance with the following methods: **(1) NIOSH 1500 for hydrocarbons, (2) NIOSH 1501 for aromatic hydrocarbons, and (3) NIOSH 1003 for halogenated hydrocarbons.**

7.3.1.1 Material and Method

a. NIOSH 1500 - collect on solid sorbent tube, coconut shell charcoal, 100 mg/50 mg; volume of 4 L, flowrate of ≤ 0.20 liter per minute (LPM) based on n-hexane. Analyze by Gas Chromatography Flame Ionization Detector (GC/FID), if hit, analyze with Mass Spectrometry (MS) and provide readout against computer library.

b. NIOSH 1501 - collect on solid sorbent tube, coconut shell charcoal, 100 mg/50 mg; volume of 30 L, flowrate of ≤ 0.20 LPM based on benzene. Analyze GC/FID, if hit, analyze with MS and provide readout against computer library.

c. NIOSH 1003 - collect on solid sorbent tube, coconut shell charcoal, 100 mg/50 mg; volume of 60-70 L, flowrate approximately 0.14 LPM. Analyze by GC/FID, if hit, analyze with MS and provide readout against computer library.

7.3.1.2 Sampling Strategy

During composting process two "area" samples of full shift duration will be obtained **inside** of the structure and two **outside** of the structure representing background for each of the three methods ~~*approximately one week into the composting process.*~~ Area samples inside of the composting structure during active composting will be obtained as a basis for design and verification of breathing zone sampling strategies. The area samples will be of full shift duration, obtained inside of the compost building near the compost piles, but far enough so as not be hit by the windrow turner machine and any of the compost thrown from its mixing flails. The sample pump and media will be secured ~~*to the portable step ladder*~~ at approximately 1.5 meter (m) above the floor. Area samples should be biased by representing the worst-case exposure since no one will be in the structure during turning of the windrows once "active" composting begins except for the windrow

machine operator. ~~*The windrow machine operator will be working from an enclosed cab with inlet air filtration. One or two personals samples may be obtained from the windrow machine operator, however, the time to complete two to three passes through the compost piles is minimal. Thus sufficient sampling time may not be obtainable.*~~ For each method, estimate 4 samples for analysis (12 samples plus 2 blanks) for a total of 14 samples.

7.3.2 Metals

Time-integrated air sampling for metals using personal air sampling pumps will be performed by the MK SSHO during soil excavation and screening~~*, and during composting when the windrows are mixed to determine what, if any, of the metal analytes may be airborne and there levels*~~. Sample collection and analysis will be completed in accordance with OSHA Method ID-125 or NIOSH Method 7300 for metals scan with analysis by Inductively Coupled Plasma (ICP) or Graphite Furnace Atomic Absorption (GFAA) Spectroscopy.

7.3.2.1 Material and Method

OSHA ID-125 - collect on 0.8 µm cellulose ester membrane (MCE) filter with support pad with 3-piece 37 mm clear styrene acrylonitrile (SAN) cassette. Sample Volume = 720 L at 1.5 LPM. Analytes include aluminum, cadmium, iron, nickel, antimony, chromium, lead, arsenic, cobalt, zinc, beryllium, copper, and magnesium.

7.3.2.2 Sampling Strategy

During soil excavation and screening: (1) obtain two "personal" samples of full shift duration from maximally exposed individuals completing soil excavation and screening tasks~~*; and during composting (2) obtain two "personal" samples from the windrow turning machine operator during first or second week into the composting process during turning of the windrow; and (3) obtain two "area" samples from inside the composting facility of full shift duration. Estimate 8 samples for analysis (6 samples plus 2 blanks).*~~
Estimate 4 samples for analysis (2 samples plus 2 blanks).

7.3.3 Explosives Residues

Time-integrated air sampling for explosive residues as airborne aerosols using personal air sampling pumps will be performed by the MK SSHO during soil excavation and screening, and during composting when the windrows are mixed and composting process parameters are monitored. Sample collection will be based on OSHA Method 44 and sample analysis will be conducted in accordance with EPA Method 8330 using High-Pressure Liquid Chromatography (HPLC) Analysis.

7.3.3.1 Material and Method

OSHA 44 - collect on sorbent and filter tube, 270/140 XAD-2 and glass fiber filter, OSHA Versatile Sampler (OVS) Tube. Volume = 240 L, rate = 0.5 LPM, time = 8 hour. Analysis by HPLC in accordance with EPA Method 8330 providing a scan for specific analytes and isomers. Specific analytes include HMX, RDX, TNT, 1,3-DNB, TNB, and 2,4-DNT

7.3.3.2 Sampling Strategy

During soil excavation and screening at the Mine ~~Field~~ ***Fill*** A facility, six person~~nelal~~ samples of full shift duration, or if necessary, split shift duration will be obtained from two of the laborers. The laborer's are considered the maximally exposed individual for this task. At the composting facility, six personal samples of full shift duration, or split shift if necessary, will be obtained from the Environmental Technician. The Environmental Technician is considered the maximally exposed individual during the composting process since he will be responsible for supervising the building of the windrows, applying water during mixing and refining of the windrows, and for monitoring process parameters.

~~*The construction superintendent may also be in the building during windrow building assisting the Environmental Technician. If this is the case, personal samples of full shift or split shift will be obtained.*~~ Four to six area samples inside of the composting structure during active composting will be obtained as a basis for design and verification of breathing zone sampling strategies. The area samples will be of full shift duration, obtained inside of the compost building near the compost piles, but far enough so as not be hit by the windrow turner machine and any of the compost thrown from its mixing flails. The sample pump and media will be ~~*secured to the portable step ladder*~~ at approximately 1.5 m above the floor. Area samples should be biased by representing the worst-case exposure since no one will be in the structure during turning of the windrows once "active" composting begins except for the windrow machine operator. ~~*The windrow machine operator will be working from an enclosed cab with inlet air filtration. One or two personals samples may be obtained from the windrow machine operator, however, the time to complete two to three passes through the compost piles is minimal. Thus sufficient sampling time may not be obtainable.*~~

7.3.4 Biological Hazards

Time-integrated air samples for bioaerosols will be obtained by the MK SSHO inside of the Composting Building during composting after the windrows are mixed, and

compared to background samples taken at a location outside of the perimeter of the Bioremediation site.

7.3.4.1 Material and Method

a. Collect airborne aerosols by impaction on pre-selected growth media plates using a high volume sampling pump with 2-stage Andersen Impactor calibrated using 4-L glass calibration jar with calibration specific culture plates. The sampling flowrate is 28.3 LPM and sampling time will be set at 10 minutes. Samples will be obtained for the respirable and non-respirable fractions (2-stage). Standard Method Agar (SGA) will be the growth media selected for bacteria, and Potato Dextrose Agar (PDA) for fungi (yeasts and molds).

   A separate growth media will be used for each of the following constituents and analyzed accordingly:

   1. Total bacteria (total plate count), subculture from bacteria plate for *E.coli* as a marker from manure.

   2. Fungi (molds and yeast), look especially for the fungus *Aspergillus fumigatus.*

b. Collect samples from source inventory for analysis. May consist of dip slide water samples from collection sump in building for qualitative analysis and contact slide sample from assumed fungal growth on building components such as the floors or structural support members. Samples to be obtained using contact slides and dip slides such as Biotest Diagnostics Corporation Hycon Contact Slides and Hycon Dip Slides.

7.3.4.2 Sampling Strategy

During active composting, six area samples will be obtained inside of the composting structure and six area samples outside of the structure approximately 100 m downwind from the composting structure. The samples will be obtained approximately two and three days into the composting process. Samples inside of the structure will be taken immediately after the windrows are turned.

One sample set consists of the following:

Bacteria - 1 respirable and 1 nonrespirable culture plate
Fungi - 1 respirable and 1 nonrespirable culture plate

Therefore six sample sets inside of the structure for bacteria will require 12 culture plates and six sample sets for Fungi inside of the structure will require 12 culture plates for a total of 24 culture plates. Three of the respirable sized bacteria plates and three of the non respirable sized bacteria plates will be subcultured using velveteen impression at the laboratory for *E.coli* analysis. The outside samples will total 24 the same as the inside samples. Velveteen impression will be obtained for the same amount of samples as the inside samples, 6 samples. An estimated 4 field culture blanks will be obtained in the field.

7.3.5 Wipe Sampling for Explosives Residues and Metals

Wipe samples will be obtained by the MK SSHO to assess the effectiveness of PPE controls and decontamination. Samples will be analyzed for metals and explosive residues.

7.3.5.1 Material and Method

Collect wipe samples using glass fiber filter for explosives residues and paper filters wetted with distilled water for metals. Obtain random surface samples from the inside of used protective coveralls, and from the personnel decontamination shower trailer, specifically the change room area and the lunch/conference room. Samples are obtained by wiping through a 100 cm^2 template moving in concentric squares from the outside to the inside of the sampling area. After wipe sampling, the media is folded with the exposed side in, placed in a sampling vial, and sent to the laboratory for analysis. Clean latex gloves are required for each sample. Metal samples are analyzed at the laboratory by ICP and explosive residues by HPLC.

7.3.5.2 Sampling Strategy

Samples are obtained randomly and unannounced during the first month of operations at the discretion of the MK SSHO. Estimate 10 samples for metals and 10 for explosive residues.

7.4 AIR MONITORING AND SAMPLING REQUIREMENTS

Air monitoring and sampling requirements are shown in Table A-9.

7.5 RECORDKEEPING AND CHAIN OF CUSTODY

Written records of all monitoring will be maintained on site and affected employees will be notified of monitoring results representative of their exposure. For industrial hygiene sampling requiring collection and shipment of a sample to an approved analytical

laboratory, Chain-of-Custody forms will be properly completed and accompany all collected samples in accordance with MK Industrial Hygiene Procedures Manual, Procedure 7.0, titled Analytical Laboratory Procedures. The selected AIHA accredited industrial hygiene lab will be **Lyle Environmental Management, Inc., 1507 Chambers Road, Columbus, Ohio 43212 (800-336-5953) (Attention: Sean P. Mauduit)**. Turn-around time will be set at 10 working days. Workers will be notified of time integrated sampling results via memo to the designated supervisor.

8.0
GENERAL SAFETY RULES AND PROCEDURES

8.1 GENERAL

Operations shall be conducted in a safe manner consistent with the policies and procedures outlined in this SSHP. The number of personnel shall be restricted to the minimum necessary to complete the required work as an administrative control to limit personnel exposures to potential site chemical, physical and biological hazards. All project personnel assigned to this project are responsible for following this SSHP and for using safe work practices including wearing the PPE specified by the MK SSHO. Project personnel shall report hazards and unsafe conditions and practices to the MK SSHO. All federal, state and local occupational health and safety regulations must be complied with by project personnel. Violations of project procedures may include disciplinary measures up to and including termination.

8.2 RULES AND PROCEDURES

- MK shall have available ~~*two 20-lb rated ABC multipurpose dry chemical fire extinguishers;*~~ first aid kit including CPR kit (Pocket Mask) and biohazards control kit; emergency eyewash; and spill response equipment (where necessary) available at each controlled work location. MK shall complete the Soil Excavation Maps and post it at each work site including emergency phone numbers. Work zone signs shall be posted in accordance with the requirements of Section 9.1.4 of this SSHP.

- ~~*Avoid driving over dry grass that is higher than the ground clearance of the vehicle. Catalytic converters on the undercarriage of vehicles are sufficiently hot to ignite dry prairie grass. Never allow a vehicle with a warm undercarriage to sit in a stationary location over dry grass or other combustible materials.*~~

- Do not eat, ~~*drink,*~~ smoke, take medications, chew gum or tobacco, or put objects in mouth while in the exclusion zone and contamination reduction zone or when handling samples. ***Drinking fluids for heat stress is allowed in the CRZ as established by the SSHO.***

- After handling samples, thoroughly wash hands and, if necessary, face, before eating or putting anything in mouth (i.e., avoid hand-to-mouth contamination).

- At a minimum, wear ~~*hard hats*~~, safety glasses and ~~*steel-toed*~~ ***sturdy work*** boots when inside the work boundaries.

- Remain a safe distance from the excavation equipment when not involved in operation or monitoring activities.

- Do not under any circumstances enter or ride in or on any backhoe/excavator bucket, materials hoist or any other device not specifically designed for carrying human passengers.

- Remain aware of your own and other's positions with regard to rotating equipment and be extremely careful when assembling, lifting and carrying items that may cause pinch point injuries and collisions.

- Be alert to the symptoms of fatigue, heat stress and cold stress and their effect on the normal caution and judgment of personnel.

- Use explosion proof sampling equipment and tools.

- Use ground fault circuit interrupters (GFCI) with all electrical tools and equipment.

- Stand clear of trenches during excavation. Always approach the excavation from upwind.

- Stand upwind, whenever possible, of excavations and other sites where the soil has been disturbed.

- Be alert to potentially changing exposure conditions as evidenced by perceptible odors, unusual appearance of excavated soils, oily sheen on water, or other evidence of possible contamination.

- Do not enter any excavation or trench greater than five feet in depth unless authorized by the MK SSHO.

- ~~*Keep hand tools off the ground and centrally located on a plastic cover or area of no contamination*~~ ***Use good housekeeping practices with regard to tools and material*** whenever possible to avoid tripping hazards and the spread of contamination.

- Use the buddy system at all times while working at the site in controlled work zones. No one is to work alone in the Exclusion Zone or Contamination Reduction Zone without permission from the MK SSHO and MK General Superintendent.

- Minimize truck tire disturbance of all stabilized sites and areas beyond the work area boundaries.

- Cease all work operations on the site at sunset unless the control zone is adequately illuminated ~~with artificial lighting~~.

- Job Supervisors shall attend the POD meeting prior to the start of the work and conduct pre- and post-entry briefs with all affected workers.

- Avoid direct contact with contaminated materials unless necessary for sample collection or required observation. PPE shall be worn at all times, as required.

- Remove disposable clothing and follow decontamination procedures.

- Always use an appropriate level of personal protection as assigned in this SSHP. Lesser levels of protection can result in otherwise preventable exposure.

- Maintain a high level of awareness of the limitations in mobility, dexterity and visual impairment inherent in the use of Level B and Level C PPE.

- Establish prearranged hand signals or other means of emergency communication when wearing respiratory equipment, since this equipment impairs speech communication.

- Wear hearing protection if you have to shout to communicate at a distance of three feet in steady-state (continuous) noise or when you expect loud impact noise from certain activities. The MK SSHO will assess potential noise exposure and provide recommendations on correct hearing protection devices.

9.0
WORK ZONES

Where a potential for worker exposure to potentially hazardous substances and physical hazards, work zones will be established and the flow of personnel and equipment will be controlled. The establishment of work zones will ensure that personnel are properly protected against hazards present in the work area, work activities and contamination are confined to the appropriate areas, and personnel can be located and evacuated in an emergency.

Prior to the commencement of remedial field activities, work zones shall be established by MK. These work zones are depicted on Soil Excavation Figures contained in Appendix E of the Operational Plan. In addition to the zones, data will be added in the field to show assembly points~~; evacuation routes; location of first aid equipment; fire extinguisher and eye wash and spill containment equipment;~~ and emergency communications equipment. Posted with the Soil Excavation Map shall be the list of emergency phone numbers ~~and route map to hospital~~.

9.1 EXCLUSION ZONE (EZ)

The EZ is the area where hazardous substances are present or expected to occur, or health and safety hazards are present. Entry into this area is limited to personnel required to perform the work who are wearing the specified PPE and have attended a Pre-Entry Briefing. Everyone entering the EZ shall have completed the required health and safety training and will participate in the medical surveillance program as necessary. The boundary of the EZ will be determined for each activity and may change depending on activities and conditions.

An EZ will be established to encompass the contaminated area. ~~For this project, the EZ for each soil excavation area will consist of the immediate area of excavation extending outward for approximately 20 feet. The EZ will include the excavated soil classified as potentially contaminated that may be stockpiled.~~

The EZ will be clearly delineated with signs, barricade tape, fences, or other suitable means. Access control points will be established to regulate the flow of personnel and equipment in an out of the zone and to help verify that proper procedures for entry and exit are followed. PPE levels in the EZ are initially scoped as Level C, depending on the task listed in Table A-6. Decontamination will follow guidelines established in Section 10. Gross contamination will be removed in the EZ followed by additional decontamination in the CRZ. The MK SSHO will monitor activities in the EZ from his position in the CRZ. ~~The boundary line from the EZ to the CRZ will be based on the following criteria:~~

~~1. Approximately 20 feet outward from contaminated work area, or as much as necessary, to include the heavy equipment operating in the zone and the temporary staging of any potentially contaminated soil.~~

~~2. Perimeter air monitoring using the portable dust/aerosol monitor shows no increase in concentration above background. Background is considered the Support Zone (SZ) area.~~

9.2 CONTAMINATION REDUCTION ZONE (CRZ)

The CRZ is the transition area between the contaminated area, the EZ and the clean area, the SZ. While designed primarily to reduce the possibility of the support zone becoming contaminated or affected by EZ activities, the CRZ is also used for decontamination of personnel and equipment. No personnel or equipment will be allowed to exit the contamination reduction and exclusion zones without being properly decontaminated except in emergency situations. The immediate area around the EZ extending outward as much as necessary to accommodate the complete length of the longest piece of heavy equipment will be designated the CRZ. Used PPE will be removed and stored in properly marked **containers.** plastic ~~lined 55-gallon drums or other containers for later disposal.~~

9.3 SUPPORT ZONE (SZ)

The SZ consists of all areas outside the exclusion and contamination reduction zones. These areas are used for all site activities which are not limited to the EZ or CRZ equipment and material storage, offices, parking, etc. The SZ will also serve as the staging area for all activities to be conducted.

9.4 WORK ZONE CONTROLS

Before site operations begin, the SZ MK site office shall be identified with signs identifying as such. MK shall post signs at entrances to the CRZ and EZ stating the following **or equivalent**:

HAZARDOUS AREA KEEP OUT
DANGER
AUTHORIZED PERSONNEL ONLY
PERSONAL PROTECTIVE EQUIPMENT IS REQUIRED IN THIS AREA

MK shall post signs at the entrance to the CRZ before operations begin, stating:

NO SMOKING, DRINKING OR EATING BEYOND THIS POINT

10.0 PERSONNEL AND EQUIPMENT DECONTAMINATION AND HYGIENE PROCEDURES

All personnel, clothing and equipment leaving an exclusion zone (contaminated or potentially contaminated area) shall be inspected and, if necessary, decontaminated to remove any potentially harmful substances that may have adhered to them. Some equipment/clothing may be disposed of rather than decontaminated. In this case, the used PPE and/or equipment (e.g. disposable sampling equipment) will be stored in properly marked ***containers***, ~~*plastic lined 55-gallon drums*~~ in the CRZ. A temporary decontamination station will be constructed at the excavation site and a permanent decontamination facility has been constructed at the Bioremediation Facility. This section gives guidelines regarding the decontamination procedures to be implemented. Final details will be described during the site-specific safety and health briefing prior to commencing field operations.

10.1 EMERGENCY PERSONNEL DECONTAMINATION

Based on the type of emergency that is postulated, the following types of response actions are anticipated for personnel emergencies within the exclusion zone.

A. Critical Triage Condition (life threatening) - Emergency evacuation or extrication from the exclusion zone to contamination reduction zone where emergency medical treatment and stabilization will be attempted until arrival of first responding medical unit. Or, emergency medical treatment and stabilization will be completed in the exclusion zone till arrival of first responding medical unit. In either case, gross decontamination will be completed to the extent possible by removal PPE, wiping patient down to remove contamination and/or wrapping patient to prevent spread of contamination.

B. Marginal Triage Condition (non life threatening) - patient will be evacuated from exclusion zone and treated in the contamination reduction zone followed by decontamination and patient preparation for transport to emergency medical facility. Decontamination could occur first followed by medical treatment in selected scenarios.

10.2 PERSONNEL DECONTAMINATION

Decontamination (decon) stations will be established in the contamination reduction zone. The decon stations will consist of the following, as appropriate:

- Equipment drop ~~*to include used respirator receptacle.*~~

- ~~*Portable High-Efficiency Particulate Air (HEPA) vacuum for vacuuming PPE before removal. Note: this requirement may be deleted pending results of airborne monitoring and engineering dust controls.*~~

- Boot wash station ~~*and glove wash station with boot pick for cleaning initial mud cakes from boots*~~ (a tub of water and detergent (Alconox®) with brushes for cleaning and another tub of water for rinsing.

- ~~*Sampling equipment wash station (similar to boot wash station).*~~

- *Disposable clothing drop. All contaminated or potentially contaminated disposable* clothing shall be placed into labeled 6-mil plastic bags within ***an appropriate container.*** ~~*a 55-gallon drum for disposal.*~~

- Personal showers and washing facilities consisting of water, towels and soap. Street clothing shall be stored in lockers provided at the shower facility. Note: this facility is located at the Bioremediation Facility.

10.3 EQUIPMENT DECONTAMINATION

All equipment/tools used in the exclusion zone will be inspected for contamination prior to removal from the site. Any equipment/tools with visible contamination will be cleaned prior to removal from the site. A water and detergent solution will be used for highly contaminated equipment, followed by a high-pressure water rinse if necessary. All water used during decontamination will be contained for disposal. Construction and field equipment will be decontaminated at each temporary decontamination facility. If contamination can not be removed on-site, the affected surfaces of the equipment will be wrapped in plastic and transported to the Bioremediation Facility where more thorough decontamination can be performed prior to release.

10.4 WASHING FACILITIES

A hand and face washing facility shall be made available in each CRZ ~~*consisting of water, towels and soap for personnel*~~.

10.5 DECONTAMINATION WASH WATER

Equipment and personnel decontamination areas will be designed to allow for collection of all wash/rinse waters into 55-gallon drums or a larger temporary storage container.

10.6 SANITATION AND PERSONAL HYGIENE

Personnel exiting the CRZ are required to thoroughly wash their hands and face prior to eating, drinking, smoking, or using toilet facilities. Adequate toilet, hand washing and lunchroom facilities free of contaminants shall be designated by MK.

11.0
ON-SITE FIRST AID AND EQUIPMENT

11.1 FIRST-AID AND MEDICAL FACILITIES REQUIREMENTS

At a minimum, 16-unit first aid kits shall be maintained by MK in their office trailer and at each work site. The location of the first aid kit shall be communicated to project personnel as part of the site-specific and pre-entry brief training. Included with the first aid kit shall be a CPR Pocket Mask and a biohazards control kit (universal precautions and clean up kit). The MK SSHO can require upgrades to the first aid equipment requirements as deemed necessary for this job (e.g. insect repellants and sunscreen)

An emergency eyewash, ~~fire extinguisher~~ and spill control kit (if applicable) at each controlled work area. The Bioremediation Facilities will have stationary eyewash/drench equipment. The emergency phone number list and route map to medical facilities shall be posted at each office trailer and at each controlled work zone as part of the MK prepared Soil Excavation Figures.

11.2 REPORT OF FIRST AID CASES

All first aid cases, accidents and incidents shall be promptly reported to the MK SSHO. The MK SSHO shall immediately notify the Navy Technical Representative (NTR) or the Navy Resident Engineer in Charge of Construction (REICC) of all injuries even if preliminary information is available. The MK SSHO and MK PM shall follow the guidance presented in Program Procedure PHSP-04.1. The MK Charleston Project Management Office (PMO) should be notified shortly after notification to the Navy's designated authority. If an on-site official cannot be reached, the MK Charleston PMO still should be promptly notified at (803) 554-0100.

A written report of the injury must be provided to the ROICC or REICC and MK Charleston PMO within 24 hours of the incident via memo form. This report is to include as attachments:

a. Employer's First Report of Injury (Workman's Comp Insurance Form)
b. Supervisor's Accident Investigation Report (MK Form CAS 24/77)
c. Accident Data Report (MK Form 6783/91)
d. Any records provided by the Medical Service Provider such as 1) Hospital Emergency room Report, 2) Examining Physician's designation of work restriction, and 3) Examining Physician's Work Release.

12.0
EMERGENCY RESPONSE PLAN AND CONTINGENCY PROCEDURES

This section describes a contingency plan to be implemented in the event of injuries, illnesses, accidents, and fires. The contingency plan provides guidelines for the proper response to emergency situations, however the actual response will depend on the situation.

In the event of an emergency, the MK SSHO, MK General Superintendent and/or Job Supervisors will direct all personnel to take appropriate action which could include any or all of the following:

- Evacuate all personnel involved to a safe place of refuge.
- Notify emergency services using phone numbers identified in Table A-3.
- Initiate emergency response action.

12.1 PRE-EMERGENCY PLANNING

Prior to start-up of pilot scale, the MK Project Manager, MK General Superintendent and the MK SSHO shall review the Program Procedure PHSP 02.1 and check that all steps necessary to assure effective emergency response requirements and resources are established for this project.

In addition to the guidance provided in this document, all safety meetings and pre-entry briefs shall include emergency response preplanning specific to each task and work site as a topic area. This training will include:

- Assembly Points. If the work activity may result in a release of hazardous substances, more than one assembly point will be specified to ensure that at least one upwind assembly point is accessible. This also pertains to fires and sites subjected to adverse weather conditions. Information must be included on the Soil Excavation Maps.

- Emergency Response Coordinator. The MK SSHO, as the onsite emergency response coordinator, will contact the emergency response providers, account for individuals at the assembly point, and plan the appropriate response.

- ~~*Evacuation Routes. Routes will be specified as needed. Information must be included on the Soil Excavation Maps.*~~

- Means of Evacuation. The number of personnel that may be evacuated from the work site by various routes will be evaluated by the MK SSHO.

- Means of Communication. This will include the means of alerting personnel to an emergency at all points in the work site and should consider the sound screening potential of hearing protection, distance and noisy equipment when specifying the use of alarms, horns and sirens. The means of communication with emergency response providers will be considered. ~~*Information must be included on the Soil Excavation Maps.*~~

- Designation of a location for first aid services, fire extinguisher(s) and spill control equipment. ~~*Information must be included on the Soil Excavation Maps.*~~

- Procedures to be followed by employees who remain to manage critical operations to insure safe shutdown.

12.2 RESPONSIBILITIES

The following is a description of personnel roles, lines of authority, and the emergency response communication/notification responsibilities for site personnel.

12.2.1 Project Personnel

It is the responsibility of all project personnel to recognize conditions that have the potential for resulting in a personal injury or damage to property, and to report the condition immediately to their supervisor or the MK SSHO.

12.2.2 Project Manager

The Project Manager is responsible for assuring adherence to the administrative elements and implementation of the Emergency Response Plan (this section of the SSHP). He will evaluate the site's preparedness for emergency responses and identify special conditions which may require additional preparations. He will ensure that necessary equipment and facilities are provided to support this plan.

12.2.3 MK Certified Industrial Hygienist (CIH)

The CIH is responsible for preparing the Emergency Response Plan (this section of the SSHP). The CIH will develop and review the Emergency Response Plan, evacuation plans, and oversee implementation at the site. The CIH will ensure that supervisors and employees meet the training requirements of the plan and approve the equipment used in the plan. The CIH may designate duties on site to the MK SSHO. The CIH is the designated Health and Safety Manager based in Boise, ID.

12.2.4 MK Site Safety and Health Officer (SSHO)

The MK SSHO is responsible for directing response actions to emergency situations. He will coordinate with project management to ensure the availability of response equipment and supplies, and initiate drills. Emergency response plans will be evaluated over the course of the project by the MK SSHO to keep them up-to-date and to ensure that they are applicable and relevant to emergency response organizations.

12.3 EMERGENCY RECOGNITION AND PREVENTION

Site personnel shall be apprised of hazards and potential life-threatening emergency situations during site-specific training including the project kickoff site specific training, safety meetings and briefs. Means to control hazards and mitigate emergency situations will be addressed at that time.

12.4 SAFETY ZONES

Suitable assembly points will be established at the start of the project for each work site. These assembly points will provide a safe point of refuge for site personnel. Additional information will be provided in the site briefing concerning other hazards that may arise at the site. ~~Safety Zones or a~~ Assembly points must be included on the Soil Excavation Map.

12.5 SITE SECURITY AND CONTROL

At all times, site personnel working in an area in the near vicinity of an emergency situation shall be apprised of the emergency as soon as possible. Only authorized personnel shall be allowed into the emergency area. As necessary, the emergency area may be cordoned off and access restricted by MK and the Subcontractors.

12.6 EVACUATION ROUTES

Evacuation routes will be established based on scope of work, location of work and atmospheric conditions. ~~Evacuation routes shall be posted in various locations on the site if necessary and included on the Soil Excavation Map.~~ All site personnel will be made aware of evacuation procedures during site-specific training especially pre entry briefings. Topography, layout and prevailing wind conditions shall be considered in establishing evacuations routes and assembly points.

12.7 EMERGENCY DECONTAMINATION

In the event an employee is injured or becomes ill and requires hospital treatment, the extent of decontamination to be performed will be assessed based on severity of the injury or illness and time delay that decontamination may cause. If the employee has any signs of contamination, the ambulance and hospital staff will be notified of this and the nature

of the contamination. Reasonable effort will be expended to decontaminate the victim prior to removal from the site. The medical facilities will be notified of the intended scope of work and the potential for contaminated personnel. The medical facilities will receive copies of all the Material Safety Data Sheets (MSDSs) and/or NIOSH Pocket Guides where available and applicable to this project. The MK SSHO shall contact the medical facility to establish a contact person for the necessary information.

12.8 EMERGENCY MEDICAL TREATMENT AND FIRST AID

See Section 11.

12.9 COMMUNICATIONS

The MK SSHO, the MK General Superintendent and the Job Supervisor(s) at each work site area shall be equipped with two-way radios for communications on site as warranted. Emergency Communications equipment will be provided by MK. Additional communications with outside emergency services will be accomplished through the use of cellular telephones if necessary. Both two way radios and cellular phones are to be used for emergency's only. In the radios will be used for standard field construction communication, then the MK SSHO shall establish strict protocols for radio communication and insure all personnel who carry radios understand the protocols.

12.10 CRITIQUE OF RESPONSE AND FOLLOW-UP

All actual emergencies shall be critiqued and follow-up corrective actions shall be implemented as needed. Drills and exercises if completed shall also be critiqued. The critique will be conducted as part of a safety meeting first by supervisory personnel and second with all MK and Subcontractor personnel.

12.11 INITIAL REPORTING AND MANAGEMENT OF INCIDENTS

All emergencies will be promptly reported to the Emergency Response Number x3300, the Environmental Department (x1132, x3114, or x6160), and to the MK SSHO at 812-854-6941 or portable radio Unit 0004. The MK SSHO will assure that the Navy designated authority is notified promptly and directing initial emergency response actions until the arrival of the NSWC Crane designated authority. The designated authority can include the resident officer in charge of security, fire department and/or ambulance services or the Environmental Protection Department Manager.

The following contains the initial response actions to be taken by MK personnel and subcontractors at the work site for the type of incident incurred.

A. Incident Type: Fires in Vehicles and Mobile Equipment, Process Equipment, and Support Structures.

Response Actions:

1. Notify the NSWC Crane Security Desk at extension 3300, and provide the following information:

    a. The name and phone number of the person making the call.

    b. The location of incident.

    c. The type of incident.

    d. Injured or trapped personnel and any potential material release.

2. MK SSHO or Supervisor designates one person to meet the emergency response units at the nearest road where the units will be approaching.

3. MK SSHO or Supervisor assumes initial command of the situation and directs personnel to do one of the following:

    a. Emergency shutdown of process equipment or mobile equipment, evacuate the work zone or immediate area to a safe place of refuge, meet the incoming response units and provide all available information.

    b. **As appropriate,** initiate first fire attack and knockdown using available fire extinguishing equipment followed by evacuating the work zone or immediate area.

B. Incident Type: Preparation for Adverse Weather Condition to Include High Winds, Tornado, Heavy Rains, Snow and Ice Conditions.

Response Actions:

1. MK SSHO or Supervisor notifies the NSWC Crane Security Desk at extension 3300 and provides the following information:

    a. The name and phone number of the person making the call.

    b. The location of the work site(s).

    c. Preparation for adverse weather condition has begun.

d. Permanent structure location where personnel will be relocating to on Base.

2. MK SSHO or Supervisor will direct personnel to shutdown operations, secure loose materials, and park and secure mobile equipment. Personnel shall be directed to report to a permanent building after completing decontamination procedures.

3. MK SSHO or Supervisor will complete accountability and await clearance from Base Security to resume operations or other action.

C. Incident Type: Medical and Rescue Emergencies.

Response Actions:

1. Notify the NSWC Crane Security Desk at extension 3300 and provide the following information:

   a. The name and phone number of the person making the call.

   b. The location of incident.

   c. The type of incident.

   d. Injured or trapped personnel and any exposure to hazardous material.

2. MK SSHO or Supervisor designates one person to meet the emergency response units at the nearest road where the units will be approaching.

3. MK SSHO or Supervisor assumes initial command of the situation and completes or directs personnel to do one or both of the following:

   a. Emergency shutdown of process equipment or mobile equipment and any other necessary action to mitigate or control the incident.

   b. Initiate emergency first aid actions until arrival of emergency units.

D. Incident Type: Mobile vehicle accident or incident during transport of contaminated soil from work area to Bioremediation Facility.

Response Actions:

1. Notify the NSWC Crane Security Desk at extension 3300 and provide the following information:

    a. The name and phone number of the person making the call.

    b. The location of incident.

    c. The type of incident.

    d. Injured or trapped personnel and estimate of material released.

2. MK SSHO or Supervisor designates one person to meet the emergency response units at the nearest road where the units will be approaching.

3. MK SSHO or Supervisor assumes initial command of the situation and directs personnel to do the following:

    a. Cordon off the accident/spill area.

    b. Cover the spilled contaminated soils with canvas tarps or visqueen.

    c. Install temporary environmental protection and/or erosion control measures to contain potential surface run-off contamination.

13.0
LOGS, REPORTS, AND RECORDKEEPING

13.1 SAFETY AND HEALTH LOGBOOK

The MK SSHO shall maintain a Project Safety and Health Logbook for the duration of work activities at the site. ~~*Entries in the logbook shall be time sequenced. The entries must be written in ink and the bottom of each page must be signed. The logbook shall be hard bound. No pages will be removed from the log book. Corrections must be lined out and initialed.*~~ The logbook will contain specific information recorded on a daily basis ~~*utilizing the Form shown in Figure A-4*~~. The logbook will contain specific information on safety and health activities and to further describe or clarify information recorded on the Figure A-5, the SSHP Daily Logbook Report form.

~~*A separate file folder shall be maintained for Figure A-4. Separate file folders shall be established for this SSHP; calibration data sheets if not attached to Figure A-4; safety and IH instrument serial numbers and shipping papers; field specific safety and health procedures; all safety and health related permits; and weekly safety inspections.*~~ Records of training and site orientations; briefings including pre-entry briefs; Subcontractor prepared equipment inspection sheets, if applicable shall also be maintained in file folders by the MK SSHO. ~~*In addition, the MK SSHO shall copy and file all receipts for MK equipment rentals and consumables upon delivery to the site and the inventory shall be verified as acceptable.*~~

13.2 REPORTS

A weekly site safety and health inspection report shall be prepared by the MK SSHO. This report shall identify work activities, safety and health-related deficiencies, and corrective measures. As a minimum, the checklist shown in Figure A-5 shall be completed by the MK SSHO. All near miss incidents and incidents that result in property damage, personnel injuries or illness will be investigated and notification/reporting requirements shall be followed in accordance with PHSP 04.1.

13.3 FIELD MASTER COPY OF SSHP

The MK SSHO shall maintain a field master copy of this SSHP document to include all redlines ~~*and the completed Soil Excavation Maps*~~. This copy shall be properly filed with project records at the completion of the project and sent to MK PMO office in Charleston.

13.4 RECORDKEEPING

The MK SSHO shall maintain records of all injuries and illnesses for MK employees only incidental to the work in accordance with 29 CFR 1904, including copies of the Worker's Compensation First Report of Injury. Accidents and Incidents data reporting requirements

shall be managed in accordance with Program Procedure PHSP-04.1 for both MK and Subcontractor personnel as stated in Section 11.3.

A record of all first aid treatments not otherwise recordable shall be maintained and furnished to MK or the Navy's designated authority upon request. Monitoring and sampling results shall be managed as stated in Section 7.5 of this plan.

13.5 SAFETY AND HEALTH PROJECT COMPLETION REPORT

The MK SSHO shall complete a safety and health project completion report at the conclusion of the field work associated with pilot scale. The purpose of the report is to a self assessment summarizing effectiveness of the safety and health program implemented in the field; lessons learned and suggestions for program improvement; accident and incidents; air monitoring and sampling results including ratings on instrument useability; and how well the original prepared AHA worksheets reflected field conditions. The report shall be directed to the MK SouthDiv Program Health and Safety Manager within ten working days after project completion.

~~*The Cleveland safety and health representative, Frank J. Petrik, has responsibility for providing a summary write-up on all industrial hygiene time integrated sampling results. This summary shall be integrated into the project completion report.*~~

14.0
ON-SITE WORK PLANS

A Pilot Scale Operational Plan has been prepared of which this document is designated Appendix A to define the work tasks and identify the work objectives. The means and personnel required to complete the task is identified along with consideration for methods, logistics, quality control/assurance and resources.

15.0
COMMUNICATION PROCEDURES

15.1 RADIO COMMUNICATION, TELEPHONE, ALARMS AND DRILLS/EXERCISES

Refer to Section 12.10 of this Plan. Two-way radios in coordination with office telephones will be the primary choice of emergency communication. An emergency alarm, such as an air horn, shall be available if necessary at each major work site to warn personnel of an emergency. Personnel shall be trained on what actions they are to take if the alarm is sounded to include evacuation routes and assembly points. Drills and exercises shall be conducted to ensure that communication methods are adequate. The MK SSHO will test the two-way communication system for confirmation of emergency communication using NSWC Crane protocols.

16.0
SPILL CONTAINMENT PLAN

16.1 GENERAL

Spill and release accident scenarios during remediation could occur and involve residue process material and reinstates from decontamination activities. The following information will be used by project personnel to respond to and mitigate any releases on the project site.

In the event of a spill or release, the MK SSHO, MK General Superintendent and/or Job Supervisors will direct all personnel to take appropriate action which could include any one or all of the following:

- Initiate spill response action and notify emergency services.
- Notify emergency services as identified in Table A-3.
- Evacuate the work zone to a safe place of refuge.

16.2 PREPLANNING FOR SPILL CONTROL

Remedial construction activities will be reviewed for release potential and the capability of on-site personnel to adequately respond. Base personnel will be contacted to determine their capability to respond to various releases. All aspects of the Emergency Response Plan as described in Section 12, will be reviewed by site personnel to ensure adequacy and that resources are available.

During mobilization activities for this project, the MK Project Manager, MK SSHO, MK General Superintendent shall review the Program Procedure PHSP 03.1 and the Base Oil and Hazardous Substances Spill Contingency Plan. After review, they shall execute the steps necessary to assure effective spill response planning requirements and resources are established for this project.

MK will cooperate with the base; other site contractors; and federal, state and local directors of emergency preparedness and response to ensure a coordinated effort in preparing for a spill emergency, with response plans that are compatible and integrated. Prior to the start of work, MK will review PHSP 03.1 and meet with site representatives on spill control and assure the SSHP is consistent with site requirements for spill control. Specific roles and responsibilities will be reviewed for MK and Navy personnel. The Base Fire Department will be notified of any spills classified above incidental and will assist in spill containment. The Base Response Team (SRT) will provide overall command and control of the clean-up activity for spills classified above incidental until relieved by a higher authority.

16.3 SPILL AND FIRE CONTROL MATERIALS AND EQUIPMENT

When planning to move or handle drums (or other containers) containing hazardous or special waste materials, the following shall be kept available in areas where spills, leaks or ruptures may occur: 1) salvage drums or containers (approved by the U.S. Department of Transportation); 2) suitable quantities of proper absorbent materials; 3) portable containing material; 4) neutralizing agents; and 5) fire extinguisher(s).

Drums and containers used during a clean-up will be appropriate to the hazardous substances they are meant to contain, and will meet the regulations promulgated by DOT, 49 CFR Parts 171-179, OSHA, 29 CFR 1910.120, and EPA 40 CFR 262. Drums and containers will be inspected for defects and their integrity assured prior to being filled with any non-solid hazardous or special waste substance.

A spill of material can be contained with porous or absorbent barriers. Absorbent materials can take several configurations (pillows, sheets, booms, loose chips, particle beads, and fibers) that may be set in place, or scattered by hand. Preferred sorbents are inert nonreactive clay minerals (neutralizing agents may be added), or specific formulations which provide automatic neutralization or vapor control.

16.4 SPILL CONTROL MEASURES

Stopping the leak or spill at its source may involve turning off pumps or closing valves. Returning a container to an upright position, transferring wastes to other containers, or moving containers to less dangerous locations may, in some circumstances, be possible, but should not be attempted if the identification of the substance is not known unless Level B PPE Protection is worn and decontamination stations have been established. Similarly, the patching of an active leak is not advised until an initial "Size-Up" of the situation is made and guidance established in Section 16.6 has been followed.

16.5 DRUM, CONTAINER, AND TANK HANDLING AND MOVING PROCEDURES

Drums, containers, and/or tanks of hazardous or special waste substances will not be moved until the requirements for preparations described in a task work plan and SSHP have been completed (i.e., all required equipment and materials are at the work site ready for use, and the employees have been familiarized with their responsibilities, the emergency response procedures, and the potential hazards associated with the contents of the drums and containers).

Work site operations will be organized to minimize the amount of drum or container movement. Each drum or container will be inspected before it is moved to ensure that it can be handled without suffering a rupture or puncture, and relocated without having the contents spill or leak.

Unlabeled or unmarked drums and containers will be considered to contain hazardous substances and handled accordingly until the contents are positively identified and labeled. Drums and containers under pressure, as evidenced by bulging or swelling, will not be moved until such time as the cause for excess pressure is determined and appropriate containment procedures have been implemented to protect employees from explosion.

Equipment used to handle the drums and containers will be selected, positioned, operated, and maintained to minimize any contact that could rupture, puncture, dent, or drop drums and containers holding hazardous or special waste substances, and the potential for equipment ignition sources to ignite vapors released from ruptured drums or containers shall be controlled.

Drums and containers that cannot be moved without rupture, leakage or spillage will be transferred to a sound container using a device specified for the material being transferred. During liquid transfer of flammable or combustible liquids, bonding and grounding equipment shall be utilized.

16.6 INITIAL REPORTING AND MANAGEMENT OF INCIDENTS

All spill emergencies classified above incidental shall be promptly reported to the Emergency Response Number x3300, the Environmental Department (x1132, x3114, or x6160), and to the MK SSHO at 812-854-6941 or portable radio Unit 0004. The MK SSHO will assure that the Navy's Technical Representative (NTR) or ROICC is notified promptly.

Incidental Release (defined) - a release of hazardous material where the substance can be absorbed, neutralized, or otherwise controlled at the time of release by employees in the immediate release area, or by maintenance personnel. In addition, the quantity of released material does not exceed any EPA Reportable Quantities.

The MK SSHO, the MK General Superintendent and the Job Supervisor(s) are responsible for directing initial emergency response actions until the arrival of the NSWC Crane designated authority. The designated authority can include the officer in charge of security, fire department and/or ambulance services. The following contains the initial response actions to be taken by MK personnel and Subcontractors at the work site for spill and release emergencies:

Response Actions:

1. Classify spill as Incidental or an Emergency.

2. If Incidental (as defined above): 1) notify immediate supervisor; 2) assess hazard potential, establish precautions and PPE requirements; 3) begin clean-up of spill.

3. If Emergency, initiate response action in accordance with the following steps:

   A. Quickly assess probability of safely stopping spill. If physical, chemical, or biological health hazards exist, immediate evacuate the area to a safe distance upwind and upgrade from the spill.

   B. Notify the **Crane Security Desk at X 3300** and provide the following information:

      1. Name and phone number of person calling;

      2. Location of incident;

      3. Type of incident;

      4. If anyone is injured or trapped and the estimated volume of material released.

   C. MK SSHO, MK PM or Job Supervisor(s) designates one person to meet the emergency response units at the nearest road where the units will be approaching.

   D. MK SSHO, MK PM or Job Supervisor(s) assumes initial command of the situation and directs personnel to do one of the following:

      1. Emergency shutdown of process equipment or mobile equipment, evacuate the work zone or immediate area to a safe place of refuge and meet the incoming response units and provide all available information.

2. Initiate initial spill response using available spill response equipment only for small emergency spill events where personnel are trained to mitigate. Evacuate the work zone or immediate area if there are any health threats or risks to personnel.

3. MK's PM or designee shall immediately notify the Navy's Designated Authority and the MK PMO. The Navy's Designated Authority is the ROICC assigned to this project.

17.0
CONFINED SPACES

Permit-required confined space entry is not anticipated on this project. If entry is required in an excavation that is greater than 5 feet in depth, the excavation must be treated initially as a permit-required confined space. Atmospheric monitoring must be completed before the excavation can be downgraded to nonpermit-required confined space. Engineering controls (e.g. sloping, shoring, shields) must be in place to safeguard the excavation from collapse. Any confined space entry must follow MK Procedure 9.0 found in the Industrial Hygiene Procedures Manual (MK 1994a).

TABLES

Table A-1
Site Description and Contaminants

Identifier	Location/Description	Scope of Work	Contaminants
SWMU 12/14	Mine Fill A, west central portion of NSWC, H-17 off of H-45.	Soil excavation and transport to Bioremediation Facility, site restoration, and soil sampling.	Major contaminants include TNT, HMX and RDX in soils are the most significant.
Bioremediation Facility	Located south of Burns City Gate off of H-161.	Soil excavated from SWMU 12/14 will be processed at this facility using composting technology.	Contaminants in Soil to be processed and mixed with amendments are described in Section 1.2.

Table A-2
Potential Contaminants

Potential Contaminant	Description	Exposure Limits	Signs and Symptoms	First Aid
Acetone (Very low levels)	Colorless liquid with a fragrant, mint-like odor.	OSHA PEL of 1000 ppm as 8 hr TWA.	Irritant to eyes, nose, and respiratory system. May cause dermatitis upon skin contact.	Irrigate eyes immediately with water. Soap wash skin promptly. Seek medical attention immediately.
Barium (Very low levels)	White odorless solids, soluble compounds may be liquid compounds.	OSHA PEL 10 mg/m^3 as 8 hr TWA.	Upper respiratory irritant. Irritant to eyes and skin. Ingestion causes gastroenteritis, muscle spasm.	Irrigate eyes immediately with water. Soap wash skin promptly. Provide respiratory support. Seek medical attention immediately.
Carbon Dioxide, off-gas component of aerobic composting.	Colorless, odorless gas. Normal constituent of air, about 3,000 ppm.	OSHA PEL of 5,000 ppm.	Cause headache, dizziness, restlessness; dyspnea, increased heart rate, pulse and blood pressure; convulsions and asphyxia at high concentrations	Provide respiratory support. Seek medical attention immediately.
Cadmium (Very low levels)	Metal: silver-white, blue-tinged lustrous, odorless solid.	OSHA PEL 2.5 ug/m^3 as 8 hr TWA.	Inhalation causes pulmonary edema, dyspnea, cough and chest pain. Ingestion causes chills, muscle aches, nausea, vomiting and diarrhea.	Irrigate eyes immediately with water. Soap wash skin promptly. Seek medical attention immediately.
Chromium metal (Very low levels)	Blue white to steel gray, lustrous, brittle, hard solid.	OSHA PEL 0.5 mg/m^3 as 8 hr. TWA	Histologic fibrosis of lungs by inhalation. Causes sensitive dermatitis. Poison by ingestion.	Irrigate eyes immediately with water. Soap wash skin. Provide respiratory support. Seek medical attention immediately.

Table A-2
Potential Contaminants

Potential Contaminant	Description	Exposure Limits	Signs and Symptoms	First Aid
Lead (Very low levels)	A heavy, ductile, soft grey solid. Noncombustible solid. (May be in soil as a biodegraded product of leaded gasoline.	OSHA PEL 50 ug/m^3 as 8 Hr. TWA	Weakness, lassitude, and insomnia. Facial pallor, anorexia, low weight, and malnutrition. Constipation, abdominal pain and colitis. Anemia, gingival lead line, tremor, Encephalopathy, Nephropathy. Irritant to eyes. Hypertension.	Irrigate eyes immediately with water. Soap wash skin promptly. Provide respiratory support. Seek medical attention immediately.
Formaldehyde	Nearly colorless gas with a pungent, suffocating odor.	OSHA PEL 0.75 ppm, STEL of 2 ppm.	Irritant to eyes, nose, throat and respiratory system.	Irrigate eyes immediately with water. Soap wash skin promptly. Provide respiratory support. Seek medical attention immediately.
Hydrogen Sulfide (May be off gas component of composting)	Colorless gas with a strong odor of rotten eggs.	OSHA Ceiling of 20 ppm, NIOSH Ceiling of 10 ppm.	Irritant to eyes and respiratory system. Causes dizziness, headache and eye pain. CNS depressant. Asphyxiant.	Irrigate eyes immediately with water. Provide respiratory support. Seek medical attention immediately.
Nitrogen Dioxide	Yellowish-brown liquid or reddish brown gas with a pungent acrid odor.	OSHA Ceiling of 5 ppm and NIOSH ST of 1 ppm.	Irritant to eyes, nose, throat, causes cough and decrease in pulmonary function.	Irrigate eyes immediately with water. Soap wash skin promptly. Provide respiratory support. Seek medical attention immediately.
Diesel exhaust including oxides of nitrogen.	Appearance and odor vary depending upon the specific diesel exhaust component.	Use STEL of 1 ppm.	Irritant to eyes and respiratory system, may cause pulmonary function changes.	Remove to fresh air, provide respiratory support. Seek medical attention immediately.

Table A-2
Potential Contaminants

Potential Contaminant	Description	Exposure Limits	Signs and Symptoms	First Aid
DNT (Dinitrotoluene) (Majority of amino DNTs undetected in soil samples, can exist as metabolite during composting)	Orange-yellow crystalline solid with a characteristic odor.	OSHA PEL 1.5 mg/m^3 as 8 hr. ACGIH 8 hr TWA of 0.15 mg/m^3	Causes anoxia; cyanosis; anemia; jaundice; reproductive effects; suspected human carcinogen.	Irrigate eyes immediately with water. Water flush promptly. Soap wash skin promptly. Provide respiratory support. Seek medical attention immediately.
HMX (Cyclotetramethylenetetranitramine)	White-crystalline solid.	No exposure limits listed.	May cause Irritation to eyes, skin and respiratory system.	Irrigate eyes immediately with water. Water flush promptly. Soap wash skin promptly. Provide respiratory support. Seek medical attention immediately.
RDX (Cyclonite)	White crystalline powder, combustible solid.	OSHA PEL 1.5 mg/m^3 as 8 hr. ACGIH 8 hr TWA of 1.5 mg/m^3 Note: skin designation	Skin, eye and respiratory irritations. Very similar to TNT.	Irrigate eyes immediately with water. Soap wash skin promptly. Provide respiratory support. Seek medical attention immediately.
TNT (Trinitrotoluene)	Colorless to pale yellow, odorless solid or crushed flakes. Combustible solid.	OSHA PEL 1.5 mg/m^3 as 8 hr. TWA, ACGIH 8 hr TWA of 0.5 mg/m^3. Note: skin designation.	Causes liver damage, jaundice; cyanosis; sneezing; cough; sore throat; peripheral neuropathy; muscle pain, kidney damage; cataract; sensitive dermatitis; leukocytosis; anemia and cardiac irregularities.	Irrigate eyes immediately with water. Soap wash skin promptly. Provide respiratory support. Seek medical attention immediately.

Table A-2
Potential Contaminants

Potential Contaminant	Description	Exposure Limits	Signs and Symptoms	First Aid
Biological constituents to include total bacteria, *E. Coli*, and fungi (yeasts and molds). Constituents will be present in amendments and may become airborne during composting operations.	Microscopic organisms	None established, will compare to background levels or other data from current literature. Bacterial or fungal concentrations above 10,000 colony forming units per meter cubed (cfu/m^3) in total or above 500 cfu/m^3 for each specific group of organisms or species of a potentially pathogenic nature should be considered a threat to the worker's health. For gram-negative bacteria, a TLV of 1000 cfu/m^3 has been proposed, since a number of species of this group are able to release pathogenic endotoxins, which may cause an additional health hazard.	Varies, depending on sensitivity. Can include respiratory system irritation, distress and infections.	Remove from source, seek medical attention.

Note: Data is Table derived from NIOSH 1994, OSHA 1996 and ACGIH 1996-1997.

Table A-3 Personnel Names and Telephone Numbers

Contact	Person or Agency	Telephone
Fire Department	**NSWC Fire Department (Base)**	**3300 emergency** **(812) 854-1235**
Ambulance Service	**NSWC Ambulance (Base)**	**3300 emergency** **(812) 854-1100**
Law Enforcement	**NSWC Security (Base)**	**(812) 854-3318**
Robert Hlavacek	MK Program Manager (MK PMO)	(803) 554-9367
Martin Wilson	MK Field Operations Manager	(803) 554-6003
~~Steve Downey~~ **David Beall**	MK Site Project Manager	~~*Office: (812) 854-6941*~~ ***(812) 824-2594***
~~*Wally Metcalf /*~~ **Tom Dougal**	MK Site Superintendent	~~*Office: (812) 854-6941*~~ ***(812) 824-6728***
Richard Spurgeon	MK Site Safety and Health Officer	~~*Cellular: (812) 639-8356*~~ ~~*Unit 0004 radio*~~ ***(812) 847-7690***
Don Miller	MK Project Engineer / **Science Manager**	Office:(216) 523-2121
~~Randy Smith~~ **Steve Cory**	MK Site Quality Assurance/Quality Control Supervisor	Office: (812) ~~*854-6941*~~ ***(812) 824-9819***
William Piispanen	MK Health and Safety Program Manager	(208) 386-5930
Cmdr. Fred Smith	NSWC Crane PWD/Eng. Dept	(812) 854-1834
Capt. J.M. Carney	NSWC Base Commander	(812) 854-1210
Jim Hunsicker or ~~Tom Brent~~ **Chris Freeman**	NSWC Environmental Protection Services	~~*(812) 854-6160*~~ ***(812) 854-4423***
Adrienne Townsel-Wilson	SOUTHNAVFACENGCOM	(803) 743-0582
Brent Robertson	ROICC(NTR)	(812) 854-3318
Lt. Dale Eads	NSWC E.O.D. (Base)	(812) 854-3456
Dale Groh	NSWC Safety Directory	(812) 854-3601
Poison Control Center	Poison Control Center	(800) 942-5969
National Response Center	National Response Center	(800) 424-8802
Regional USEPA	USEPA (Region 5) Emergency State of Indiana Emergency	(312) 353-2318 (317) 233-7745

Table A-3 Personnel Names and Numbers (continued)

Contact	Person or Agency	Telephone
Hospital	NSWC Base Medical Facility Head Nurse (Mary Muessig)	(812) 854-1220 (812) 854-4319
Hospital	Bedford Medical Center 2900 West 16 th Street Bedford, IN 47432	(812) 275-1200
Hospital	Bloomington Hospital 601 West Second Street Bloomington, IN	(812) 336-9515
Utility Locator Service	Public Works Dept.	(812) 854-1834

Directions to NSWC Medical Department On-site:

The NSWC Fire Department coordinates the on-site ambulance service. The Medical Department is located in Building 12, off of H-2 just north of H-5.

Directions to Bedford Medical Center:

From Main Gate, head east on Highway 58 to the city of Bedford, then turn left onto 16th Street. Distance to hospital is approximately 20 miles. From Bedford Gate, head east on 158 to the City of Bedford. 158 turns into 16th Street.

Directions to Bloomington Hospital:

Exit NSWC Crane on H5-45 through the Bloomington Gate, then follow Highway 45 North to Bloomington. At the intersection of Highway 45 and Highway 37, continue straight ahead over the bypass (Bloomfield Road), and follow Bloomfield Road north until it becomes 2nd Street. Continue on 2nd Street and the hospital will be on right-hand side of the road.

Note: MK SSHO is to ensure this Table and Figure A-1 are included with the Soil Excavation Maps posted at the job site. In addition, the Table and Figure must be posted at each office location.

Notify the MK SSHO of any changes in work conditions which may affect the health and safety aspects of the task. The Superintendents or designated supervisors are responsible for conducting Plan-of-the-Day meetings, Pre-Entry and Post-Entry Briefings were necessary, weekly safety meetings, and conducting or ensuring that other training is completed.

Table A-4
Training Requirements

Identifier	Location	40-Hr. Haz. Waste	Haz. Waste Annual Ref.	Haz. Waste Super-visor	Weekly Safety Mtg.	Haz. Com.	CPR/ First Aid	Respira-tory Protec-tion	Site-Speci fic	POD, Pre- & Post-Entry Brief	Other
SWMU 12/14	Mine Fill A	Y	Y	Y	Y	Y	Y	Y	Y	Y	N
Sampling	All locations	Y	Y	Y	Y	Y	Y	Y	Y	Y	Y[1]
Soil and wastewater sampling	Bioremediation Facility	Y	Y	Y	Y	Y	Y	Y	Y	Y	Y[1]
Pilot Start-up and operation of facility	Bioremediation Facility	Y	Y	Y	Y	Y	Y	Y	Y	Y	Y[1]

Y = Yes, N = No, 0 = Optional

Notes:

1 - 49 CFR Part 172 Subpart H for personnel required to classify, mark, select packaging, inspect, load and transport hazardous materials.

Table A-5 Selection of Personal Protective Equipment

PPE	Level D	Modified Level D	Level C	Level B
Coveralls or other approved working apparel	Yes	Yes	Yes	Yes
Chemical-resistant clothing (coveralls; hooded, one- or two-piece chemical-resistant coveralls)		Yes		
Chemical-resistant clothing ~~*(coveralls; hooded one- or two-piece chemical splash suit; chemical-resistant hood and apron;*~~ disposal chemical-resistant coveralls)			Yes	
Chemical-resistant clothing (coveralls and long-sleeved jacket; one- or two-piece chemical splash suit; disposal chemical-resistant one-piece suit)				Yes
Boots, leather or chemical resistant, ~~*protective toe and steel shank meeting*~~ ANSI Z41.1 ~~*(29 CFR 1926.28(a).*~~	Yes			
Boots (inner), chemical resistant, ~~*protective toe and shank meeting*~~ ANSI Z41.1 ~~*(29 CFR 1926.28(a)).*~~		Yes	Yes	Yes
Boot covers (outer), chemical resistant (disposable)		Optional	Optional	Optional
Safety glasses or chemical splash goggles, meeting ANSI Z87.1-1979 for "Industrial Safety Glasses"	Yes	Yes	Yes	
Face shield	Optional	Optional	Optional	Optional
Gloves (cotton/leather)	Optional		***Optional***	
Gloves (inner), chemical resistant or liners		Optional	~~*Yes*~~ ***Optional***	Yes
Gloves (outer), chemical resistant		Yes	Yes	Yes
Long underwear		Optional	Optional	Optional
~~*Hardhat*~~	~~*Yes*~~	~~*Yes*~~	~~*Yes*~~	~~*Yes*~~
Positive pressure, full-facepiece with nose cup, self-contained breathing apparatus (SCBA) or positive pressure, supplied-air respirator with escape SCBA (MSHA or NIOSH approved) (Note: escape SCBA may not be required)				Yes
Air-purifying respirator, half-face or full face with suitable cartridge (MSHA or NIOSH approved)			Yes	

Note: Optional requirements to be determined by the MK SSHO based on additional evaluation of site conditions and hazards analysis. Note: safety glasses not required when wearing full-face APR.

Table A-6 Minimum Personal Protective Equipment Requirements by Task		
Site	Activity	PPE
Soil excavation at SWMU #12/14	1. Excavate, screen, and load soils for Composting 2. Site restoration 3. Decontamination and rock washing 4. Transporting contaminated soil (driving trucks)	1. ~~Level C~~, ***Modified Level D,*** modify based on air monitoring/sampling results. 2. Level D 3. ~~Level C~~ ***Modified Level D, use rain suit*** 4. Level D
SWMU Sampling	1. Obtain soil and/or groundwater samples	1. Modified Level D
Pilot Scale Start-Up and Operations of Bioremediation Facility	1. Offload and grind amendments 2. Load amendment blend in windrows 3. Offload contaminated soil into windrows 4. Turn and mix windrows 5. Monitor windrow parameters and field screening/confirmation sampling 6. Load and transport treated soils 7. Decontamination water management 8. Composting building housekeeping 9. Maintenance and Upkeep of Equipment	1. Modified Level D, ~~use approved Dust Mask.~~ 2. Modified Level D, ~~use approved Dust Mask.~~ 3. Level C, modify where necessary. 4. Level C, modify where necessary. 5. ~~Modified Level D, use approved Dust Mask.~~ Level C if working in building during windrow turning. ***Modify when necessary.*** 6. Modified Level D, ~~use approved Dust Mask during loading.~~ Level D when clear of decon station. 7. Modified Level D. 8. Modified Level D, modify where necessary. 9. Level D, modify per task based on manufacturer's recommendation.

Level C respiratory protection includes half-mask air purifying respirator (APR) with HEPA cartridges and indirect venting safety goggles, or full-face APR with HEPA cartridges. Protective suits are standard Tyvek™ or equivalent for particulate protection. Either rubber boots or latex shoe covers can be used. Either rubber, vinyl coated or latex gloves (15-20 mils) can be used.

Modified Level D includes same protective clothing as Level C except for Dust Masks where specified should be 3M Brand 8710 Dust/Mist Respirator or equivalent where Dust Mask is specified. In some cases leather work gloves can be substituted for chemical protective gloves (e.g. handling amendments, off-loading amendments and building maintenance).

Table A-7
Airborne Contaminant Response Criteria

Contaminant	Level	PPE	Monitoring Frequency	Actions Taken
Volatile organic compounds. Both direct reading and time integrated samples will be obtained. ~~*Time integrated samples will be obtained at the compost facilities. Level C PPE will be used at excavation sites and the composting facility. APR's selected are HEPA but can be modified to include organic cartridges depending on VOC levels.*~~ Frequency of monitoring is subjected to change as field experience is obtained.	No more than 5 ppm above background, no benzene detected	Level D or Modified Level D	~~*Prior to each shift and reentry following 30 minute vacancy or as warranted*~~ ***During initial excavation and compost turning.***	Continue periodic monitoring
	Greater than 5 ppm above background but less than 10 ppm above background. No benzene detected, no Action Level for any organic exceeded.	Level D or Modified Level D	~~*At least once every hour, when change in operation occurs, or when requested by workers*~~ ***Prior to each shift.***	Monitor for benzene or other organics. Continue periodic monitoring
	Greater than 10 ppm above background or benzene detected or Action Level exceeded for any organic.	To be determined by SSHO	To be determined by SSHO	Stop work and notify SSHO

Table A-7
Airborne Contaminant Response Criteria

Contaminant	Level	PPE	Monitoring Frequency	Actions Taken
Lead (inorganic)	Less than action level for lead (30 µg/m³) and/or no visible observation of excessive dusts	Level C	Periodic per plan	Continue monitoring and/or sampling and observations
	Greater than action level or visible observation of excessive dusts.	Level C or as determined by SSHO	Representative personnel sampling and monitoring to be conducted or continued	Stop work and notify SSHO
	Greater than OSHA PEL or greater than 10 mg/m³ total dust.	As determined by SSHO	Representative personnel sampling and monitoring to be conducted or continued	Stop work and notify SSHO
Oxygen	Less than 19.5%	To be determined by SSHO	To be determined by SSHO	Stop work, exit area and immediately notify SSHO
Cadmium	Less than action level for cadmium of (2.5 µg/m³) and/or no visible observation of excessive dusts	Level C	Periodic per plan	Continue monitoring and/or sampling and observations
	Greater than action level or visible observation of excessive dusts.	To be determined by SSHO	To be determined by SSHO	To be determined by SSHO
	Greater than OSHA PEL or greater than 10 mg/m³ total dust.	To be determined by SSHO	To be determined by SSHO	To be determined by SSHO

Table A-7
Airborne Contaminant Response Criteria

Contaminant	Level	PPE	Monitoring Frequency	Actions Taken
Explosives Residues	Less than action level for the explosive compound having the lowest AL (DNB, 0.5 mg/m^3) and/or no visible observation of excessive dusts	Level C	Periodic per plan	Continue monitoring and/or sampling and observations
	Greater than action level or visible observation of excessive dusts.	To be determined by SSHO	To be determined by SSHO	To be determined by SSHO
	Greater than OSHA PEL or greater than 10 mg/m^3 total dust.	To be determined by SSHO	To be determined by SSHO	To be determined by SSHO
Hydrogen Sulfide	Greater than 10 ppm	To be determined by SSHO	Periodic per plan inside of Composting Facility	Stop work, shut off equipment and evacuate Composting Facility. Notify SSHO; ventilate structure
Carbon Dioxide (CO_2)	Greater than 4,000 ppm	To be determined by SSHO	Periodic per plan inside of Composting Facility	Stop work, shut off equipment and evacuate Composting Facility. Notify SSHO; ventilate structure
Ammonia Off-gas from Compost Piles	Greater than 25 ppm	Upgrade respirator cartridges to include ammonia cartridge.	Periodic per plan inside of Composting Facility	Stop work, shut off equipment and evacuate Composting Facility. Notify SSHO; ventilate structure, and upgrade respirator cartridges

Table A-7
Airborne Contaminant Response Criteria

Contaminant	Level	PPE	Monitoring Frequency	Actions Taken
% LEL	Equal to or greater than 10%.	To be determined by SSHO	To be determined by SSHO	Stop work, shut off equipment, remove ignition sources if safe to do so; notify SSHO

Table A-8
Frequency of Physiological Monitoring for Fit and Acclimatized Workers[1]

ADJUSTED TEMPERATURE[2]	IMPERMEABLE ENSEMBLE
90°F (32.2°C) or above	After each 15 minutes of work
87.5°-90°F (30.8°-32.2°C)	After each 30 minutes of work
82.5°-87.5°F (28.1°-30.8°C)	After each 60 minutes of work
77.5°-82.5°F (25.3°-28.1°C)	After each 90 minutes of work
72.5°-77.5°F (22.5°-25.3°C)	After each 120 minutes of work

[1]For work levels of 250 kilocalories/hour.

[2]Calculate the adjusted air temperature (ta adj) by using this equation:

ta adj °F = ta°F + (13 x % sunshine).

Measure air temperature (ta) with a standard mercury-in-glass thermometer, with the bulb shielded from radiant heat. Estimate percent sunshine by judging what percent time the sun is not covered by clouds that are thick enough to produce a shadow.

(100 percent sunshine = no cloud cover and a sharp, distinct shadow: 0 percent sunshine = no shadows.)

Note: Reprinted from *Occupational Safety and Health Guidance Manual for Hazardous Waste Site Activities* (1985).

Table A-9
Monitoring and Sampling Requirements

Site	Activity	Monitor						Sample		
		VOC	Dust	~~*Bio*Oxygen and % LEL~~	Perimeter (Dust)	Noise	Heat Stress	VOC	Metals	Explosives
SWMU 12/14	1. Excavate, screen, and load soils for Composting	~~Y~~	Y	~~O~~ *N*	O	Y	O	N	Y	Y
Start-up and Operations of Bioremediation Facility	1. Offload and grind amendments.	N	Y	N	N	Y	O	N	N	N
	2. Load amendment blend in windrows.	N	Y	N	N	Y	O	N	N	N
	3. Offload contaminated soil into windrows.	Y	Y	~~Y~~	N	Y	O	N	N	N
	4. Turn and mix windrows.	Y	Y	~~Y~~[2] *Y*	N	Y	O	Y	~~Y~~ *N*	Y

Y = Yes, O = Optional at discretion of SSHO, N = Not required

Notes:

1 = In addition to LEL and O_2, conduct periodic monitoring for other organics, CO_2, CO, Hydrogen Sulfide, ammonia, nitrogen dioxide and nitrous fumes, and formaldehyde levels inside of the Composting Facility using direct reading instrumentation and colorimetric indicator tubes as described in Section 7. Occupational exposure limits are presented in Table A-2.

2 = Bioaerosol sampling campaign parameters are defined and specified in Section 7. Suggested occupational exposure limits are presented in Table A-2.

FIGURES

Figure A-2 Safety Meeting Report

Type of Meeting:_____.

Topic:_____.

The following personnel were present for meeting conducted at _____ (time) on _____ (date) at _____ (location).

NAME	SIGNATURE	ORGANIZATION

_____

Printed Name of Meeting Chairman Signature Date

Figure A-3 Pre-Entry Briefing Signature Sheet

Work area(s) to be entered _____

The following personnel have had a pre-site entry briefing conducted at _____ __ (time) on _____ (date) at _____ (location), and are familiar with this plan's provisions, and are willing to meet the requirements of this plan.

NAME	SIGNATURE	ORGANIZATION

_____

Printed Name of Supervisor Signature Date

FORM DELETED

~~**Figure A-4 SSHO Daily Logbook Report**~~ ~~Page ___ of ___~~

~~Date~~ _____ ~~Report Number~~ _____

~~Location(s) Work Activity and # Employees:~~ _____

~~Weather:~~ ~~Wind speed~~ _____ ~~Wind direction~~ _____

~~Temp. & Pressure~~ _____ ~~Precipitation~~ _____

~~Amount sun~~ _____

~~Monitoring conducted:~~

~~Location~~	~~Sampled for~~	~~Instrument used~~	~~Results~~	~~Sampled By/Time~~

~~Levels of Protection:~~ _____

~~Problems or Unusual Situations:~~ _____

~~Correspondence:~~ _____

~~Other Comments:~~ _____

~~MK SSHO Printed Name:~~ _____ ~~Signature~~ _____ ~~Date~~ _____

Figure A-5 SSHP Weekly Inspection Checklist

Surveillance No. _____

SURVEILLANCE NO:	ACTIVITY:		PROJECT NO:
DATE:	LOCATION:		SURVEYED ORGANIZATION: PRIME:
	SITE/AREA CONTACT:	RESPONSIBLE MANAGER:	SUBTIER:

ITEM NO.	DESCRIPTION OF SURVEYED ITEMS	N/A SAT UNSAT	DESCRIPTION OF DISCREPANCY/ NON-COMPLIANCE	ACT OR COND	CAT	REQUIRED ABATEMENT DATE	CORRECTIVE ACTION TAKEN AND DATE ABATEMENT COMPLETED
	Section 1						
1	Scope of work and site contaminants accurately described?						
	Section 2						
2	Activity hazard analysis prepared for each major work phase? (EM 385-1-1, Section 01.A.09)						
3	All hazards including chemical/biological and physical adequately described?						
	Section 3						
4	Roles and responsibilities described and personnel roster up-to-date?						
	Section 4						
5	All site personnel completed required training?						
6	Training documented and records on site?						
	Section 5						
7	All site personnel completed initial medial qualification?						
	Section 6						
8	PPE available and in good condition?						
9	PPE work per SSHP and/or SSHO direction?						
10	Personnel trained in proper use, limitations, and inspection of PPE?						
11	PPE inspected per SSHP?						
12	PPE donning/doffing procedures in place?						

FIGURE 5. SSHP Weekly Inspection Checklist (continued)

Surveillance No. _____

ITEM NO.	DESCRIPTION OF SURVEYED ITEMS	N/A SAT UNSAT	DESCRIPTION OF DISCREPANCY/ NON-COMPLIANCE	ACT OR COND	CAT	REQUIRED ABATEMENT DATE	CORRECTIVE ACTION TAKEN AND DATE ABATEMENT COMPLETED
13	Written SOP available describing respirator selection and use?						
	Section 7						
14	Air monitoring conducted per SSHP?						
15	Monitoring equipment properly maintained and calibrated?						
16	Employees notified of monitoring results?						
17	Chain of custody prepared and maintained for all samples?						
	Section 4 and 8						
18	Weekly safety meeting held?						
19	Pre entry briefs held? and signature sheet completed?						
20	Haz Com programs in place?						
21	Competent person evaluates excavation?						
22	Personnel responsible for work maintains control of area and general safety requirements are being followed ? Note: fire extinguishers, eyewash, first aid kits and spill response equipment.						
	Section 9						
23	Soil Excavation Maps prepared and updated?						
24	Maps posted near work area and stored in field master SSHP?						
25	Traffic patterns established and rules observed?						
	Section 10						
26	Inspections performed of all personnel, clothing and equipment leaving exclusion zone?						
27	All materials decontaminated prior to existing contamination reduction zone?						
28	Decon stations properly established?						
29	Proper personal hygiene practices observed?						
30	Decon solutions collected and properly disposed of?						
	Section 11						

FIGURE 5. SSHP Weekly Inspection Checklist (continued)

Surveillance No. _____

ITEM NO.	DESCRIPTION OF SURVEYED ITEMS	N/A SAT UNSAT	DESCRIPTION OF DISCREPANCY/ NON-COMPLIANCE	ACT OR COND	CAT	REQUIRED ABATEMENT DATE	CORRECTIVE ACTION TAKEN AND DATE ABATEMENT COMPLETED
31	At least two employees on each shift trained in CPR and first aid and BLOOD BORNE pathogens?						
32	First aid kit at each work site?						
33	All first aid and medical cases promptly reported to MK SSHO?						
	Section 12						
34	All personnel trained on Emergency Response Plan and Contingency Procedures?						
35	Emergency pre-planning addressed in safety meeting?						
36	List of emergency services/contact is up to date and posted?						
37	Assembly points identified and communicated to employees?						
38	Evacuation routes established and communicated to employees?						
39	Communication methods are adequate						
40	All drills, exercises, and emergencies critiqued?						
41	All emergencies promptly reported to MK SSHO?						
	Section 13						
42	MK SSHO maintains project log book?						
43	Daily reports completed by MK SSHO?						
44	Daily inspections completed by MK SSHO?						
45	Weekly reports prepared by MK SSHO?						
46	Records of all injuries and illnesses maintained by MK SSHO?						
	Section 14						
47	Work plans/Operational Plans available and up to date?						
48	SOPS developed as needed?						
48A	Equipment operational checklists developed as needed?						
48B	Maintenance SOPs include safety and health aspects?						
	Section 15						

FIGURE 5. SSHP Weekly Inspection Checklist (continued)

Surveillance No. _____

ITEM NO.	DESCRIPTION OF SURVEYED ITEMS	N/A SAT UNSAT	DESCRIPTION OF DISCREPANCY/ NON-COMPLIANCE	ACT OR COND	CAT	REQUIRED ABATEMENT DATE	CORRECTIVE ACTION TAKEN AND DATE ABATEMENT COMPLETED
49	Two-way radios available per SSHP?						
50	Cellular telephone available as needed?						
51	Emergency alarms available and personnel trained on what actions to take?						
52	Drills and exercises conducted to test communication methods?						
	Section 16						
53	Spill response measures reviewed with personnel?						
54	Suitable quantities of spill supplies available?						
55	Spills promptly reported to MK SSHO?						
56	Operations arranged to minimize spills?						
	Section 17						
57	Confined space requirements of 385-1-1, Section 06.0.01 followed? Personnel trained?						

Inspection Performed By: _____ Date: _____

Abatement Accepted By: _____ Date: _____

ATTACHMENT A

ACTIVITY HAZARD ANALYSIS

ACTIVITY HAZARD ANALYSIS (AHA)

Activity: General Soil Excavation Activity and Transport for Composting, SWMU 12/14		Analyzed By/Date: Frank J. Petrik 4/7/97	Reviewed By/Date:
1.0 Principal Steps	**Potential Hazards**	**Recommended Controls**	
1.1 Walk area down, establish work zone, haul routes, get permit and begin soil excavation. 1.2 Screen Soil, load and haul activity . Note: see worksheet on Screener.	1.1a. Contact with underground utilities or process piping. 1.1b. Contact with unexploded ordnance. 1.1c. Struck by and struck against physical objects during clearing and grubbing. 1.1d. Biological; weeds, snakes, spiders; other plant life. 1.1e. Contact by inhalation, direct contact or ingestion of chemical contaminants. 1.2a. Struck by and struck against physical objects during load and haul. 1.2b. Spread of contaminated materials.	1.1a. Excavation and Trenching Permit completed and in place at work site. Utility locates coordinated by MK onsite PM through the NSWC PWD. MK PE must assess undermining of structural supports. 1.1b. MK PM to reverify with NSWC the necessity for UXO Survey. 1.1c. MK SSHO to lead Plan of Day meeting reviewing clearing and grubbing safety based on EM-385-1 Section 31. 1.1d. MK SSHO to discuss specific biological hazards awareness with NSWC Medical and/or Safety/IH department and plan for and communicate findings at POD and/or Pre Entry Briefs. 1.1e. ~~Level C~~ ***Modified Level D*** PPE specified. Personal air sampling required. Dust control by wetting required. Personal decontamination required. 1.2a. Preplan work layout (Soil Excavation Map completed and posted). Access and Haul roads to be assessed against EM 385-1-1, Section 21.I by MK onsite PE. Backup alarms on all motorized heavy equipment and headlights on (haul truck only). **Emergency procedures and communications with haul trucks must be established.** 1.2b. Vehicle decontamination station and covered loads during transport. MK SSHO to assess decontamination and PPE requirements from time load is covered, during transport and off loading activities. Criteria reviewed at Pre-Entry Briefs.	
1.3 Equipment to be Used	**Inspection Requirements**	**Training Requirements**	
1.4 Heavy equipment for excavation and hauling. Screener and hand tools.	Daily, prior to use per manufacturer's recommendation.	OSHA 1910.120 40-Hour Training, 3 day OJT, 8 hours Supervisory. 8 hour Refresher, Site Safety and Health Plan (Project Kickoff), POD, Pre and Post Entry Briefs, OSHA Hazard Communication, Respirator.	

ACTIVITY HAZARD ANALYSIS (AHA)

Activity: SWMU "temporary" Decontamination Facility Operations, Personnel and Equipment.		Analyzed By/Date: Frank J. Petrik 4/7/97	Reviewed By/Date:
2.0. Principal Steps	Potential Hazards	Recommended Controls	
2.1. Receive and place material at facility.	2.1a. Struck by and struck against. Material handling concerns.	2.1a. SWMU temporary Decontamination Facility to provide isolation and controlled access. Equipment must be secure or blocked. MK SSHO and Project Supervisor(s) to review material handling procedures to insure good practices and approved equipment is used which conforms to OSHA & EM-381 Section 28.I requirements.	
2.2. Decontaminate Equipment using high pressure wash or hand scrubbing and/or automatic wash on vehicle tires and undercarriage.	2.2a. Contact with contaminated material and cross contamination; inhalation of airborne aerosols; contact with high pressure wash stream; unexpected movement of material to be decontaminated.	2.2a. ~~Level C~~ ***Modofoed Level D*** PPE with face shield, modify per MK SSHO review. Secure items to be decontaminated. Visual inspect integrity of Facility's con inment liners and containers used for waste waters. Personnel decontamination required including end of work shift showers at main decontamination facility.	
2.3. Rock/Debris washing	2.3a. Same as 2.1a and 2.2a.	2.3a. Same as 2.1a and 2.2a.	
2.4 Equipment to be Used	Inspection Requirements	Training Requirements	
2.5. High pressure water wash with/without soap solution; other decontamination solutions; scrub brushes; material handling equipment and securing equipment.	Before use per manufacturers recommendation.	OSHA 1910.120 40-Hour Training, 3 day OJT, 8 hours Supervisory. 8 hour Refresher, Site Safety and Health Plan (Project Kickoff), POD, Pre and Post Entry Briefs, OSHA Hazard Communication, and Respirator.	

ACTIVITY HAZARD ANALYSIS (AHA)

Activity: Temporary storage and shipment of contaminated soils, liquids or debris.		Analyzed By/Date: Frank J. Petrik 4/7/97	Reviewed By/Date:
3.0. Principal Steps	Potential Hazards	Recommended Controls	
3.1. Field screen to determine contamination, store in designated location.	3.1a. Contact with contaminated material during screening, loss of containment of contaminated material.	3.1a. Modified Level D PPE during initial screening of soil and liquids, upgrade per MK SSHO direction. Stockpile soil on polyethylene sheeting, surround with haybales and cover. Secure area. If roll-off containers used, inspect container for integrity and containment, secure area and cover. Liquid containers should be secure with secondary containment.	
3.2. Shipment of contaminated soils, liquids, or debris offsite for disposal.	3.2a. Contact with contaminated material during loading; loss of containment of contaminated material; and unsecured loads.	3.2a. Level D PPE during material handling, upgrade per MK SSHO direction. Inspect shipping containers for integrity and containment, comply with all DOT/EPA shipping requirements, especially labeling and placarding. Insure provisions for decontamination of any loading equipment.	
3.3 Equipment to be Used	Inspection Requirements	Training Requirements	
3.4. Polyethylene sheeting, hay bales, material handling equipment, liquid containers or roll-off containers.	Before use per manufacturers recommendation.	OSHA 1910.120 40-Hour Training, 3 day OJT, 8 hours Supervisory. 8 hour Refresher, Site Safety and Health Plan (Project Kickoff), POD, Pre and Post Entry Briefs, OSHA Hazard Communication, and DOT 181 certification for person supervising the preparation of contaminated materials for offsite shipment.	

ACTIVITY HAZARD ANALYSIS

SOILS BIOREMEDIATION FACILITY

ACTIVITY HAZARD ANALYSIS (AHA)

Activity: Screener Operation	Analyzed By/Date: Frank J. Petrik 4/7/97	Reviewed By/Date:

1.0 Principal Steps	Potential Hazards	Recommended Controls
1.1 Walk area down, establish work zone and material flow. Position and secure Screener at worksite.	1.1a. Struck by and struck against physical objects during initial job set-up.	1.1a. Preplan work layout (Soil Excavation Map completed and posted). Backup alarms on all motorized heavy equipment. Personnel shall maintain safe distance from equipment. ~~*High visibility vests for workers.*~~
1.2 Excavated material loaded into Screener and screen. Screened material either stockpiled or loaded directly into haul truck.	1.2a. Struck by and struck against physical objects during feed operations. Caught in and Caught by hazards.	1.2a. Preplan work layout (Soil Excavation Map completed and posted). Screener leveled, locked and outriggers or stabilizers in place. All machine guards in place and verified prior to operation. Backup alarms on all motorized heavy equipment. ~~*High visibility vests for workers.*~~
	1.2b. Airborne contaminated dust from Screener operation.	1.2b. Engineering Controls in place on Screener to control dust. Dust controls by wetting oF soil. Level C PPE.
	1.2c. Noise and vibration.	1.2c. Sound Level Surveys to be conducted by MK SSHO.
	1.2d. Fire/Explosion	1.2d. Diesel fueling operations conducted per manufacturers recommendation including daily inspection oF equipment.

1.3 Equipment to be Used	Inspection Requirements	Training Requirements
1.4 Screener, Heavy equipment for loading and hauling.	Daily, prior to use per manufacturer's recommendation in accordance with Operational Plan.	OSHA 1910.120 40-Hour Training, 3 day OJT, 8 hours Supervisory. 8 hour Refresher, Site Safety and Health Plan (Project Kickoff), POD, Pre and Post Entry Briefs, OSHA Hazard Communication, Respirator.

ACTIVITY HAZARD ANALYSIS (AHA)

Activity: Grinder/ Mixer Operation		Analyzed By/Date: Frank J. Petrik 4/7/97	Reviewed By/Date:
2.0 Principal Steps	**Potential Hazards**	**Recommended Controls**	
2.1 Position and secure Grinder/Mixer at worksite. Load amendments and discharge material into storage bins from side discharge conveyor or directly into windrows for development. Note: Grinder/Mixer will be PTO driven from tractor. Amendments will be loaded using center pivot loader with claw attachment.	2.1a. Struck by and struck against physical objects during operation, caught in and caught by hazards. 2.1b. Airborne nuisance biological aerosols; snakes, insects and rodents. 2.1c. Noise and Vibration 2.1d. Fire/Explosion	2.1a. Preplan work layout. Grinder/Mixer leveled, locked and outriggers or stabilizers in place if operated from stationary position. All machine guards in place and verified prior to operation. Backup alarms on all motorized heavy equipment. ~~*High visibility vests for workers.*~~ 2.1b. Inspect amendment stockpiles. Modified Level D PPE with Dust Mask. 2.1c. Sound Level Surveys conducted by MK SSHO. 2.1d. Diesel Fueling operations conducted per manufacturers recommendation including daily inspection of equipment.	
2.2 Equipment to be Used	**Inspection Requirements**	**Training Requirements**	
2.3 Grinder/Mixer, Farm Tractor, Loader	Daily, prior to use per manufacturer's recommendation.	OSHA 1910.120 40-Hour Training, 3 day OJT, 8 hours Supervisory. 8 hour Refresher, Site Safety and Health Plan (Project Kickoff), POD, Pre and Post Entry Briefs, OSHA Hazard Communication, Respirator and Operator Training.	

ACTIVITY HAZARD ANALYSIS (AHA)

Activity: Offload contaminated soils into windrows using end discharge Dump Truck and Self-Powered Swing Discharge Conveyor.	Analyzed By/Date: Frank J. Petrik 4/7/97	Reviewed By/Date:

3.0 Principal Steps	Potential Hazards	Recommended Controls
3.1 Position and secure discharge conveyor to Dump Truck and offload Dump Truck into conveyor for windrow development.	3.1a. Struck by and struck against physical objects during operation; caught in and caught by hazards.	3.1a. Preplan work layout. Insure conveyor is locked into position on Dump Truck. All machine guards in place and verified prior to operation. Backup alarms on all motorized heavy equipment. *High ~~visibility vests for workers.~~*
	3.1b. Airborne aerosols; chemical and biological.	3.1b. ~~*Level C*~~ ***Modified Level D*** PPE. Air monitoring and sampling campaign per Section 7 of SSHP.
	3.1c. Noise and vibration.	3.1c. Sound Level Surveys conducted by MK SSHO.
	3.1d. Fire/Explosion	3.1d. Diesel Fueling operations conducted per manufacturers recommendation including daily inspection of equipment.

3.2 Equipment to be Used	Inspection Requirements	Training Requirements
3.3 Dump Truck and Conveyor.	Daily, prior to use per manufacturer's recommendation.	OSHA 1910.120 40-Hour Training, 3 day OJT, 8 hours Supervisory. 8 hour Refresher, Site Safety and Health Plan (Project Kickoff), POD, Pre and Post Entry Briefs, OSHA Hazard Communication, Respirator, Operator Training.

ACTIVITY HAZARD ANALYSIS (AHA)

Activity: Operation of Windrow Machine, turn and mix Windrows		Analyzed By/Date: Frank J. Petrik 4/7/97	Reviewed By/Date:
4.0 Principal Steps	**Potential Hazards**	**Recommended Controls**	
4.1 Diesel powered windrow/composter turning machine is driven into composting building to mix and reform the windrow piles.	4.1a. Struck by and struck against physical objects during operation; caught in and caught by hazards.	4.1a. Preplan work layout. All machine guards in place and verified prior to operation. Cab doors closed and cab ventilation system operating. ~~*High visibility vests for personnel in building when machine is operating.*~~ Standby personnel inside oF structure need to maintain safe distance away from mixing flails.	
	4.1b. Airborne aerosols; chemical and biological.	4.1b. ~~*Level C*~~ *Modified Level D* PPE. Air monitoring and sampling campaign per Section 7 oF SSHP.	
	4.1c. Noise and vibration.	4.1c. Sound Level Surveys conducted by MK SSHO.	
	4.1d. Fire/Explosion	4.1d. Diesel Fueling operations conducted per manufacturers recommendation including daily inspection oF equipment.	
4.2 Equipment to be Used	**Inspection Requirements**	**Training Requirements**	
4.3 Windrow Machine	Daily, prior to use per manufacturer's recommendation.	OSHA 1910.120 40-Hour Training, 3 day OJT, 8 hours Supervisory. 8 hour Refresher, Site Safety and Health Plan (Project Kickoff), POD, Pre and Post Entry Briefs, OSHA Hazard Communication, Respirator, Operator Training.	

ACTIVITY HAZARD ANALYSIS (AHA)

Activity: Monitoring windrow parameters and field screening/confirmation sampling.		Analyzed By/Date: Frank J. Petrik 4/7/97	Reviewed By/Date:
5.0 Principal Steps	**Potential Hazards**	**Recommended Controls**	
5.1 Worker will monitor process parameters and obtain samples according to frequency established in Pilot Scale Operational Plan.	5.1a. Struck by and struck against Windrow machine if worker is monitoring when machine is operating.	5.1a. Preplan work sequence, maintain clear area away from machine. Wear high visibility vest.	
	5.1b. Airborne aerosols and vapors/gases, both biological and chemical. Direct contact with chemicals contained in sampling kits.	5.1b. Modified Level D with Dust Mask, upgrade or downgrade based on results of air monitoring and sampling campaign. Use Level C PPE if in building at same time the Windrow machine is operating. Review MSDS and suppliers instructions for sampling kits.	
5.2 Equipment to be Used	**Inspection Requirements**	**Training Requirements**	
5.3 Instrumentation and sampling kits.	Daily, prior to use per manufacturer's recommendation.	OSHA 1910.120 40-Hour Training, 3 day OJT, 8 hours Supervisory. 8 hour Refresher, Site Safety and Health Plan (Project Kickoff), POD, Pre and Post Entry Briefs, OSHA Hazard Communication, Respirator.	

ACTIVITY HAZARD ANALYSIS (AHA)

Activity: Load and Transport Treated Soils		Analyzed By/Date: Frank J. Petrik 4/7/97	Reviewed By/Date:
6.0 Principal Steps	**Potential Hazards**	**Recommended Controls**	
6.1. Loader will load treated soil into Dump Truck for transport to onsite landfill for use as daily cover.	6.1a. Struck by and struck against physical objects during operation.	6.1a. Preplan work layout). Haul roads to be assessed against EM 385-1-1, Section 21.I by MK onsite PE. Backup alarms on all motorized heavy equipment and headlights on (haul truck only). Emergency procedures and communications with haul trucks must be established. ~~*High visibility vests for personnel working in near vicinity oF heavy equipment.*~~	
	6.1.b Airborne nuisance dust.	6.1b. Dust Controls required to include covered loads during transport. Level D PPE expected, upgrade if necessary.	
	6.1.c Noise and vibration.	6.1c. Sound Level Surveys conducted by MK SSHO.	
	6.1.d Fire/Explosion	6.1d. Diesel Fueling operations conducted per manufacturers recommendation including daily inspection oF equipment.	
6.2 Equipment to be Used	**Inspection Requirements**	**Training Requirements**	
6.3 Loader and Dump Truck.	Daily, prior to use per manufacturer's recommendation.	OSHA 1910.120 40-Hour Training, 3 day OJT, 8 hours Supervisory. 8 hour Refresher, Site Safety and Health Plan (Project Kickoff), POD, Pre and Post Entry Briefs, OSHA Hazard Communication, Respirator.	

ACTIVITY HAZARD ANALYSIS (AHA)

Activity: Decontamination Facility Operations, Personnel and Equipment.	Analyzed By/Date: Frank J. Petrik 4/7/97	Reviewed By/Date:

7.0 Principal Steps	Potential Hazards	Recommended Controls
7.1 Receive and place material at facility.	7.1a. Struck by and struck against. Material handling concerns.	7.1a. Site Decontamination Facility to provide isolation and controlled access. MK SSHO and Project Supervisor(s) to review material handling procedures to insure good practices and approved equipment is used which conforms to OSHA and EM-381 Section 28.I requirements.
7.2 Decontaminate Equipment using high pressure wash or hand scrubbing and/or automatic wash on vehicle tires and undercarriage.	7.2a. Contact with contaminated material and cross contamination; inhalation oF airborne aerosols; contact with high pressure wash stream; unexpected movement oF material to be decontaminated.	7.2a. ~~Level C~~ ***Modified Level D*** PPE with face shield, modify per MK SSHO review. Secure items to be decontaminated. Visual inspect integrity oF Facility's containment liners and containers used for waste waters. Clean side area established for worker's street clothes and approved respirator storage after cleaning and sanitizing.
	7.2b. Physical hazards associated with process equipment disassembly and dismantlement.	7.2b. Plan for decontamination to include PPE selection, energy control, material handling onsite, and waste management.

7.3 Equipment to be Used	Inspection Requirements	Training Requirements
7.4 High pressure wash with soap solution; other decontamination solutions; scrub brushes; material handling equipment and securing equipment. Personal showers; wash and change facilities.	Before use per manufacturers recommendation.	OSHA 1910.120 40-Hour Training, 3 day OJT, 8 hours Supervisory. 8 hour Refresher, Site Safety and Health Plan (Project Kickoff), POD, Pre and Post Entry Briefs, OSHA Hazard Communication, and Respirator.

ACTIVITY HAZARD ANALYSIS

Activity: Planned Maintenance during Operations Phase oF System.		Analyzed By/Date: Frank J. Petrik 4/7/97	Reviewed By/Date:
8.0. Principal Steps	**Potential Hazards**	**Recommended Controls**	
8.1. Equipment dependent, details will be determined.	8.1a Physical hazards, electrical and mechanical energy. Exposure to contaminants in process equipment.	8.1a Approved Pilot Scale Operational Plan in place. Energy Control must be emphasized in procedures. Spare parts must meet or exceed manufacturers recommendation and intended use environment. Preplan any decontamination that may be necessary, either personal and/or equipment. Preplan waste handling and disposal.	
8.2. Equipment to be Used	**Inspection Requirements**	**Training Requirements**	
8.3. Per equipment vendor requirements.	Per Pilot Scale Operational Plan. Safety Walkdown on daily basis, emergency procedures established and training conducted. Emergency systems tested on monthly/quarterly basis.	OSHA 1910.120 40-Hour Training, 3 day OJT, 8 hours Supervisory. 8 hour Refresher, Site Safety and Health Plan (Project Kickoff), POD, and OSHA Hazard Communication. May be modified if all clean new construction work.	

FCRFSOC 2
CMD 8/12/97

FINAL

EXPLOSIVES HAZARD ANALYSIS REPORT

FOR

SOILS BIOREMEDIATION PROCESS EQUIPMENT

JULY 7, 1997

Prepared For

Naval Surface Warfare Center
Crane Division
Crane, Indiana

Prepared By

COMARCO SYSTEMS
R.R. 6 BOX 28
BLOOMFIELD, IN 47424

FER PSCC 7
4/7, 5/17/97

SUMMARY

This explosive safety review of process equipment planned for a Soils Bioremediation Facility and cleanup sites was primarily based on the review of technical data incorporated in a 1992 Hazard Review of a KW Windrow Composter by Hercules Incorporated. COMARCO maintains that the explosives related hazards addressed in the Hercules Hazard Review apply to the contaminated soil handling operations of the Soils Bioremediation Facility. COMARCO considers the operation of the materials equipment listed herein as an acceptable safety risk as long as awareness training is accomplished, administrative controls are established, management review is conducted, and enforcement measures are maintained during the processing of explosive contaminated soils. The use of the Model L-160B sample drying oven is an acceptable safety risk as long as the manufacturer's installation safety instructions are certified.

1.0 INTRODUCTION

1.1 PURPOSE. The purpose of this Hazard Analysis Report is to provide Naval Surface Warfare Center, Crane Division with an evaluation of the explosive safety hazards associated with operating equipments planned for handling explosives contaminated soils during bioremediation processing.

1.2 APPROACH. The soils bioremediation process equipment listed herein were evaluated by COMARCO's Certified Safety Professional. Hazards were identified based on equipment specifications, work task descriptions, and expected exposures to explosive compounds. Recommendations for consideration by management were developed. This analysis relied on information furnished by the Government and observation of a soils screening practice.

1.3 OVERVIEW OF BIOREMEDIATION OPERATIONS. Naval Surface Warfare Center, Crane Division, Code 095, is finalizing its plans for management of a composting operation for treatment of explosives contaminated soil. The soil contains various percentages of explosive compounds which are Class 1 hazardous material. Bioremediation operations include the use of rubber-tired construction-type materials handling equipment to excavate contaminated soil sites and prepare the soil for transport. The contaminated soil is then transported to a Soils Bioremediation Facility on the Center. The soil is then windrow mixed with compost ingredients and repeatedly "turned" with special composting equipment. Upon successful completion of the bioremediation processing, the treated soil is transported for disposal. Explosive contaminated samples from the compost piles are planned to be daily tested in a portable electric bench oven to determine the percentage of moisture content.

FCR FSCC7
app 3/17/97

2.0 HAZARD ANALYSIS

NOTE: Occupational safety, health, and environmental hazards, involved in the contaminated soil processing, have been assessed in the Soils Bioremediation Facility Pilot Scale Operational Plan and have not been addressed herein.

2.1 EQUIPMENT LIST. The following equipment planned for use in the bioremediation processing of explosive compound contaminated soils have been selected for analysis. This equipment is further defined within Section 10 of the Pilot Scale Operational Plan for the Soils Bioremediation Facility:

2.1.1 Portable Soil Screener. This piece of equipment will be used at an excavation site for processing contaminated soil. The screening process removes all material over 1-1/2 inches in diameter. A trommel (drum) within the screener mechanically sorts and screens the soil prior to it being fed into a truck or pile by a conveyor. The equipment contains its own diesel engine power source.

2.1.2 Semi-Tractor Truck and Live Bottom Trailer. This equipment will be used to haul screened contaminated soil from the excavation site to the Soils Bioremediation Facility. The 48 cubic yard capacity live bottom trailer contains a bulk materials transfer system which allows for a trailer controlled discharge of its material at the Soils Bioremediation Facility. The tractor trailer will also transport treated soil for final disposal.

2.1.3 Backhoe/Loader. This equipment will be used for excavating contaminated soil, loading the portable soil screener, and/or loading the live bottom trailer at the excavation site. This equipment is a construction standard 3-4 cubic yard bucket, rubber tired loader design.

2.1.4 Steer Skid Loader. This equipment will be used for moving contaminated soil at the excavation site and handling composted soil at the Soils Bioremediation Facility. This a construction standard 1/2 to 1/3 cubic yard rubber tired excavator.

2.1.5 Center Pivot Wheel Loader. This equipment will be used to adjust the shape of composted windrows at the Soils Bioremediation Facility. This equipment is a construction standard 6-7 cubic yard bucket center pivot rubber tired loader with a claw attachment. The loader will also be used to handle uncontaminated compost material at the Facility.

2.1.6 Hopper/Conveyor System. This equipment will be used to capture contaminated soil from the live bottom trailer and convey it to windrow piles during original windrow development. The 150 ton an hour capacity rubber tired conveyor will be towed by the live bottom trailer but contains its own power source.

2.1.7 Windrow Composter (Scarab). This equipment will be used to form piles of compost material, mix compost material and contaminated soil into a formed pile, and repeatedly "turn" the compost windrows over a period of time. This equipment is especially manufactured for the self-propelled continuous mixing and forming of materials within soil contained windrows.

The rubber tired composter has its own power source and incorporates high speed internal agitation of material as it remixes the length of compost pile material.

2.1.8 Mechanical Floor Cleaners. A power brush (sweeper) and scraper attachments will be used infrequently on existing process equipment to assist in the cleanup of soil residue within the Soils Bioremediation Facility.

2.1.9 Wheeled Tractor. A rubber tired warehouse tractor will be used for transporting personnel and samples to and from the windrow buildings and the laboratory.

2.1.10 Other Process Equipment. Other types of equipment, such as sumps, pumps, sprayers, tankers, etc., may come into contact with or be exposed to explosive contaminated soil, dust, or water during the soils bioremediation processing. Hazard analysis of these items have not been specifically addressed herein.

2.1.11 Portable Electric Bench Oven. This equipment will be used to dry sample quantities of composted soil as part of a laboratory process for determining the percentage of moisture content within compost rows. This oven is not Class A listed and is not designed for flammable atmospheres.

2.2 HAZARD IDENTIFICATION. The hazards addressed in this analysis are directly related to the sensitivity and ignitible characteristics of Hazardous Material Class 1 explosive compounds present in the soil at excavation sites. Test results indicate concentrations as much as 15,300 parts-per-million of RDX within these soils. Lower amounts of TNT and HMX compounds have also been measured. Accidental initiation of this material is potentially possible if the amount and sensitivity level coincides with an adequate energy source. Two examples of when an energy source initiation could occur during the soils processing are:

1) If explosive residue is tightly pinched due to metal-to-metal close tolerances, initiation of the explosive material may occur. Initiation may result in localizing burning or an explosion due to the friction generated energy.

2) The heat energy from the hot surface of an equipment's exhaust manifold or catalytic converter could result in the burning or ignition of accumulated explosive dust.

2.3 HAZARD EVALUATION AND RISK ASSESSMENT. A comprehensive evaluation of the potentials for initiating explosive compounds during the bioremediation processing of contaminated soils has been documented by Hercules Incorporated in a 1992 Hazard Review of a KW Windrow Composter. This Hazard Review was completed to identify safety critical areas in the design and operation of the composter. This Review was extensively referred to during COMARCO's assessment of the risks during analysis of the soils bioremediation process equipment. The risk assessment matrices (Attachment A) were adopted by COMARCO from MIL-STD-882 to provide a guide for quantifying equipment hazard probability and severity factors.

FCR PS007
aff 5/17/97

2.3.1 Portable Electric Bench Oven.

Hazard Risk Index = II D. Undesirable, decision by management required.

Discussion: Further evaluation and review of the placement and design of temperature controls for this equipment by the Government will be necessary. COMARCO's assessment is based on the known hazards associated with heating appliances. These hazards are further stressed in the manufacturer's installation and operation instructions. Such installation aspects as oven and exhaust stack clearances, grounding, electrical disconnect, operator warnings; etc. will need to be further evaluated prior to operational approval. It must be assumed by lab personnel that chemical out gassing during the drying process, even with the vented oven, may cause the spring loaded oven doors to open rapidly to relieve pressure. Laboratory operations may be affected by the oven radiant heat losses. The maximum operating temperature of the oven must be certified below the ignition temperature of any explosive compound to be dried.

2.3.2 Portable Soil Screener and Composter.

Hazard Risk Index = III D. Acceptable with review by management.

Discussion: The design characteristics of each machine offer multiple opportunities for explosives accumulation and tight tolerances for energy source development. The high speed operation of some internal components increases the probability that energy sources will be present. The total operation time of each machine is extensive during soils processing, which further increases the probability of explosive incident. The wear on both machines will tend to be higher because of the complex mechanical design and operational modes.

2.3.3 Live Bottom Trailer and Hopper/Conveyor System.

Hazard Risk Index = III D. Acceptable with review by management.

Discussion: The design and operating time of these units reduce the number of occasions for energy development which in turn reduces the probability of minor injury and equipment damage.

2.3.4 Power Broom and Scraper Attachments.

Hazard Risk Index - III D. Acceptable with review by management.

Discussion: The infrequent use of these attachments should reduce the number of energy development possibilities. Frequent cleaning opportunities should reduce possibility of the buildup of explosive chemical residue.

2.3.5 All other equipment in contact with contaminated soil.

Hazard Risk Index = III E. Acceptable with review by management.

FCR PSG 7
8/17/97

Discussion: The occasion for energy source development is greatly reduced in the remainder of the equipment which comes in contact with explosive contaminated soil. It is also expected that accumulation of explosive material will be less.

2.4 HAZARD SUMMARY. In addition to the non-explosive occupational hazard communication requirements for employees, workers involved in soils processing must be advised of the dangers of potential minor burning and explosive incidents. Respect for the ignitible characteristics of explosive compounds is critical. This concern must also extend to the explosive hazards which may be present during equipment maintenance and repair.

FCR PSOC 7
5/17/97

3.0 RECOMMENDATIONS

NOTE: The majority of explosive hazard control recommendations are based on COMARCO's analysis of government furnished information, observance of screener operation, and review of lab oven location. It is important that the explosive safety related recommendations from the Hercules Incorporated KW Windrow Composter Hazard Review, along with recommendations from other explosive contaminated soils bioremediation projects, be considered by the Government along with occupational safety, health, and environmental hazard controls.

- Design controls or establish administrative hazard controls for the protection of employees which assume the possibility that minor burning or explosion can occur in or around equipments during processing of explosives contaminated soils. Incorporate hazard briefing training regarding hazardous material content of soils and potentials for explosive residues on equipments.

- Randomly monitor screener output soils during sampling to ensure that large lumps (1 1/2 inch or more) of soil are not being transported to the Facility for windrowing.

- Consider the use of portable water spray units, if necessary, for dust control purposes at the screening operation.

- Establish an equipment decontamination program wherein personnel are sufficiently familiar with the equipment to thoroughly clean tight clearance locations. Institute certification procedures for the removal of accumulated materials from all equipment exposures. Ensure that equipment attachments are cleaned before removal from a contaminated zone.

- Establish procedures and training which ensure clean components or requires wet component work conditions during maintenance and repair. Ensure that dust control covers are secured after maintenance and during equipment operation.

- Establish inspection controls to ensure that only rubber-tired materials handling equipment and vehicles are allowed in areas where explosive contamination may be present.

- Install materials on power brush and scraper blades which will reduce the potential heat of friction or sparks. Floor cleaning operations should be under water dampened conditions where possible.

- Verify that laboratory bench oven installation instructions have been complied with. Compliance with recommended oven and stack clearances for heat loss is critical. Ensure that oven heat losses do not interfere with other lab operations or installed fire safety equipment. Installation, location, and marking of an oven electrical disconnect switch is critical. Verify what the maximum operating temperature of installed oven is from the manufacturer since the present technical data does not provide that information. Verify the functioning of the oven's high limit shut-off based on that temperature. Verify functioning of shut-off reset based on manufacturer's procedures prior to operational use. Recommend installation of thermocouple as replacement of the breakable mercury filled thermometer. Locate a thermocouple

FCR/Sec.7.
app: 8/17/97

temperature readout so that operator does not have to stand in front of oven doors to read oven temperature. Attach safety precautions and establish training requirements regarding dangers of potential oven pressure relief and the improper uses of the oven.

FCR PS007
4/3/4/17/97

ATTACHMENT A

HAZARD ASSESSMENT MATRIX

FREQUENCY OF OCCURENCE	HAZARD CATEGORIES			
	I CATASTROPHIC	II CRITICAL	III MARGINAL	IV NEGLIGIBLE
(A) FREQUENT	1A	2A	3A	4A
(B) PROBABLE	1B	2B	3B	4B
(C) OCCASIONAL	1C	2C	3C	4C
(D) REMOTE	1D	2D	3D	4D
(E) IMPROBABLE	1E	2E	3E	4E

HAZARD RISK INDEX	SUGGESTED CRITERIA
1A, 1B, 1C, 2A, 2B, 3A	UNACCEPTABLE
1D, 2C, 2D, 3B, 3C	UNDESIREABLE (MANAGEMENT DECISION REQUIRED)
1E, 2E, 3D, 3E, 4A, 4B	ACCEPTABLE WITH REVIEW BY MANAGEMENT
4C, 4D, 4E	ACCEPTABLE WITHOUT REVIEW

REFERENCE MIL-STD-882C

FCR-PSC07
Exp. 5/17/96

FER PSC 7
Approved 8/17/97

MORRISON KNUDSEN CORPORATION
300 Highway 361, CTR-12
P.O. Box 310
Crane, IN 47522
(812) 854-6941
Fax: (812) 854-6944

July 17, 1997

4324-563

Chris Freeman
EPD Site Representative
Crane Division, NSWC Bldg. 3260
Crane, IN 47522

Subject: Explosives Hazard Analysis Report: Recommendations

Ms. Freeman:

The following describes Morrison Knudsen's handling of the recommendations contained in the subject report.

"Design controls or establish administrative hazard controls for the protection of employees which assume the possibility that minor burning or explosion can occur in or around equipment during processing of explosives contaminated soils. Incorporate hazard briefing training regarding hazardous material content of soils and potentials for explosive residues on equipment."

- This subject will be addressed initially and periodically during documented hazard briefings conducted as part of the "plan of the day" meetings. Employees will be made aware of the potential for burning or explosion. The principle control will be to minimize unnecessary exposure to the hazard by keeping workers clear of potential dangers. Explosion hazards, plus good operations protocol, dictate that unnecessary personnel be clear of explosive areas. Operations management will periodically review work practices to assist in minimizing personnel exposure to explosion hazards.

"Randomly monitor screener output soils during sampling to ensure that large lumps (1 1/2 inch or more) of soil are not being transported to the Facility for windrowing."

- Operations personnel will routinely monitor the screener output for lumps greater than 1 1/2 inch in diameter. This subject will be covered periodically during "plan of the day" meetings. Operations management will periodically inspect the screener output and soils delivered to the Bio-Facility to ensure lumps larger than 1 1/2 are not being transported to the facility for windrowing.

FCAPSCC 1
app: 5/17/97

"Consider the use of portable water spray units, if necessary, for dust control purposes at the screening operation."

- Dust monitoring is currently a part of the operations plan. Water spray will be available at the job site and will be used should dust monitoring require it. It will be Morrison Knudsen's practice to minimize water usage due to the waste management impacts.

"Establish an equipment decontamination program wherein personnel are sufficiently familiar with the equipment to thoroughly clean tight clearance locations. Institute certification procedures for the removal of accumulated materials from all equipment exposures. Ensure that equipment attachments are cleaned before removal from a contaminated zone."

- These activities are covered under the existing procedure SOP 3.0 Decontamination of Facilities, Equipment and Personnel.

"Establish procedures and training which ensure clean components or requires wet component work conditions during maintenance and repair. Ensure that dust control covers are secured after maintenance and during equipment operations.

- All equipment will be decontaminated per SOP 3.0 prior to maintenance/repair. Decon prior to maintenance/repair is mandatory since the personnel performing those duties are not HAZWOPER trained and will not be allowed into the exclusion zone. Daily equipment inspections are performed prior to use of equipment and is used to ensure dust control cover's are secured.

"Establish inspection controls to ensure that only rubber-tired materials handling equipment vehicles are allowed in areas where explosive contamination may be present."

- The operations plan controls the vehicles and equipment allowed in the work area. Only rubber-tired vehicles will be used on this project.

"Install materials on power brush and scraper blades which will reduce the potential heat of friction or sparks. Floor cleaning operations should be under water dampened conditions where possible."

- The power brush being procured has nylon bristles and will be used with water dampened floor conditions or water dampened brush.

"Verify that laboratory bench oven installation instructions have been complied with. Compliance with recommended oven and stack clearances for heat loss is critical. Ensure that oven heat losses do not interfere with other lab operations or installed fire safety

FCR 1 xc 7
6/7/97

equipment. Installation, location, and marking of an oven electrical disconnect switch is critical. Verify what the maximum operating temperature of installed oven is from the manufacturer since the present technical data does not provide that information. Verify the functioning of the oven's high limit shut-off based on that temperature. Verify functioning of shut-off reset based on manufacturer's procedures prior to operational use. Recommend installation of thermocouple as replacement of the breakable mercury filled thermometer. Locate a thermocouple temperature readout so that operator does not have to stand in front of oven doors to read oven temperature. Attach safety precautions and establish training requirements regarding dangers of potential oven pressure relief and the improper uses of the oven."

- All manufacturer's installation instructions have been followed. The recommendations listed above have also been complied with by following the O/M manual. A thermocouple has been procured to replace the glass thermometer. Personnel training will be provided on safe operations of the oven.

In general we agree with COMARCO's summary statement that the "operation of materials equipment listed herein has an acceptable safety risk as long as awareness training is accomplished, administrative controls are established, management review is conducted, and enforcement measures are maintained during the processing of explosive contaminated soils."

Sincerely,
MORRISON KNUDSEN CORPORATION

D Beall

Dave Beall
Project Manager

cc: B. Robertson file: 11.012.F

FCR-PSCC-7
5/17/97

HERCULES INCORPORATED
MISSILES, ORDNANCE & SPACE GROUP
ALLEGANY BALLISTICS LABORATORY
ROCKET CENTER, WEST VIRGINIA

HAZARD REVIEW OF WILEY MILL

MAY 1990

T. A. GROCE

PREPARED FOR

U. S. ARMY TOXIC and HAZARDOUS MATERIAL AGENCY
ABERDEEN PROVING GROUND, MARYLAND

AO2042-520-03-001

HERC NO. 90-21

WARRANTY

"Hercules warrants that it has performed the analysis required by the statement of work in a safe and competent manner and in accordance with the standards employed by HERCULES in performing the same or similar analysis for itself. ANY OTHER PROVISIONS OF THIS AGREEMENT TO THE CONTRARY NOT WITHSTANDING, THIS WARRANTY IS IN LIEU OF ALL OTHER WARRANTIES EXPRESS OR IMPLIED, WHETHER ARISING BY LAW, CUSTOM OR CONDUCT INCLUDING WITHOUT LIMITATION, THOSE OF MERCHANTABILITY OR FITNESS FOR A PARTICULAR PURPOSE, THAT ACCIDENTS OR HAZARDS OF ANY KIND WHATSOEVER WILL BE ELIMINATED, THAT ANY PARTICULAR STANDARD OR CRITERION OF HAZARD OR ACCIDENT ELIMINATION OF ANY KIND WHATSOEVER WILL BE ACHIEVED OR THAT ANY PARTICULAR OR ANTICIPATED RESULTS OF ANY KIND WHATSOEVER WILL BE ACHIEVED BY OWNER'S USE OR APPLICATION OF ANY OF THE INFORMATION, ADVICE, RECOMMENDATIONS OR SERVICES PROVIDED IN WHOLE OR IN PART BY HERCULES. ALL SAID INFORMATION, ADVICE, RECOMMENDATIONS OR SERVICES ARE FOR THE SOLE USE OF OWNER AND ARE USED AT OWNER'S RISK. THE RIGHTS AND REMEDIES PROVIDED HEREIN ARE EXCLUSIVE AND IN LIEU OF ANY OTHER RIGHTS OR REMEDIES WHETHER ARISING BY LAW, CUSTOM OR CONDUCT."

CAUTION

CONCLUSIONS PRESENTED IN THIS HAZARD ANALYSIS REPORT ARE BASED UPON THE HARDWARE (OR DESIGN), MATERIAL OF CONSTRUCTION, OPERATING CONDITIONS, PROCESS MATERIALS AND PROCEDURES AS THEY EXISTED AT THE TIME OF THE ANALYSIS (OR AS THEY WERE PRESENTED TO HERCULES FOR ANALYSIS). IF CHANGES IN ANY OF THESE PARAMETERS OCCUR IN THE FUTURE, THE CONCLUSIONS OF THE CURRENT HAZARD ANALYSIS MAY BE INVALIDATED.

FCR-PS007
cpg 8/17/87

TABLE of CONTENTS

	Page No.
SUMMARY	1
OBJECTIVE	1
CONCLUSIONS AND RECOMMENDATIONS	1
INTRODUCTION	3
BACKGROUND	3
SCOPE and LIMITATIONS OF THE REVIEW	3
DISCUSSION	4
DESCRIPTION OF WILEY MILL	4
DESCRIPTION OF SAMPLE	4
HAZARD REVIEW	5
REFERENCES	7

LIST of TABLES

Table No.		Page No.
I	TYPICAL SENSITIVITY DATA FOR EXPLOSIVE CONTAMINATED SOIL AND SELECTED EXPLOSIVES	8
II	REACTIVITY OF EXPLOSIVE/SAND/WATER MIXTURES	10
III	POTENTIAL INITIATION SCENARIOS FOR OPERATION OF THE WILEY MILL	12

FCRPSC0.7
app 8/1/97

SUMMARY

OBJECTIVE

The objective of this work is to review the use of a Wiley Mill for use in the homogenization of a explosive contaminated soil sample. This review will assess the potential fire and explosion hazards associated with the operation of the Wiley Mill for this service.

CONCLUSIONS AND RECOMMENDATIONS

It is concluded that the operation of a Wiley Mill in grinding explosive contaminated soil is not an explosive operation if the sample contains less than 4% explosive. Although the sample containing less that 4% explosive is non-explosive, it is not necessarily non-flammable and precautions must be taken to protect the operator and lessen the effects should a fire occur. Recommendations are made in this section and discussed in this report that should allow this operation to be conducted safely and reduce the risk and potential effects of an incident from the use of a Wiley Mill with explosive contaminated soil.

The following recommendations are made:

1. The most important recommendation is to assure that sample contains the "less than 4% explosive" that USATHAMA expects. The use of a sample with a greater percentage explosive or the inclusion of primary explosives may invalidate this hazard review.

2. Protect the operator from possible fire by conducting the grinding within a ventilated laboratory hood with the shield lowered during operation and by using safety goggles or glasses with side shields and fire retardant gloves and arm protection. If the mill must be operated with the shield raised, the operator should have the added protection of a face shield and fire retardant suit/coveralls/lab coat.

3. Clean up sample spills as soon as possible.

4. Use dust rated electrical equipment if available. If not available, prevent build-up of sample on electrical equipment, because a fire could result from heat or spark.

5. Avoid generating a dust cloud with a dusty sample.

FCR PSCC 7
GM 3/17/97

6. Do not allow the mill to continue to run with material within the mill and no output. Establish a reasonable time to accomplish the grind and shut down if this time is exceeded so as to minimize overheating in the mill.

7. If the mill feed clogs, use a non-metallic tool to assist feed. Do not allow the tool to enter the grinding chamber.

8. Operators should be trained in the importance in following proper operating procedures and the importance of using the proper personnel protective equipment provided.

9. Electrically ground the mill, auxiliary equipment, and sample preparation surfaces.

FCR PS007
8/17/97

INTRODUCTION

BACKGROUND

The Army is currently investigating the use of composting for the remediation of explosive contaminated soils as an alternative to incineration. Hercules Incorporated recently completed a hazard review of a pilot composting reactor which bacteriologically treats explosive contaminated soil. As part of the overall study, samples are tested for explosives and byproducts and it is necessary that these samples be homogenized prior to being tested. A process for homogenization has been developed by the U. S. Geological Survey Geochemistry Section which utilizes a Wiley Mill for size reduction of the sample material.

SCOPE and LIMITATIONS OF THE REVIEW

The U. S. Army Corps of Engineers has contracted with Hercules/Allegany Ballistics Laboratory (ABL) through Purchase Order No. DACA31-90-P-1114 to conduct a hazard review of Wiley Mill for use in homogenizing samples from a study at Umatilla Depot Activity (UMDA). These samples are explosives contaminated soil compost samples. The scope of the review is limited to the Wiley Mill equipment that is planned to be used in homogenization process and excludes other areas of the process, such as subsequent handling of the sample material, and other equipment that might be used in the process, such as a Jones Splitter for separation of the sample. No specific safety/hazard analysis regulations, such as MIL STD 882 or ARRCOM R 385-4, have been invoked by the purchase order.

1 CA Psec. 7
appendix

DISCUSSION

DESCRIPTION OF WILEY MILL

The Wiley Mill is a grinding device utilizing rotating cutting blades against removable cutting bars (not in contact) through a screen to achieve particle size reduction. The mill is widely used and is available in a number of sizes. The mill at U.S.G.S. is a "Model 4" and is composed of the following components[1]:

a. Loading funnel - 3" diameter by 5" deep[2]
b. Grind chamber - 8" diameter by 3" deep
c. Cutting blades - 3" long
d. Cutting bars - 3" long
e. Screen - 2 mm openings
f. Collection hopper - 4" diameter by 6" deep

The overall dimensions of the mill are 15" wide by 23" deep by 23" high and the components are steel. The cutting blades are attached to a wheel that turns at 800 revolutions per minute. An 1/2 HP motor (not explosion proof) integral to the mill drives the cutter wheel.

ABL has several Wiley Mills in use in various laboratories to reduce particle size of propellant and explosive samples. The mills are each smaller than the U.S.G.S. mill, roughly 1/4 to 1/2 size. Since 100 % explosive samples are processed at ABL, special precautions are taken such as grinding the sample with dry ice and grinding remotely or with shielding and operator protection.

DESCRIPTION OF SAMPLE

The following description[1] is of the sample that has been processed by U.S.G.S. and it is anticipated that future samples would be similar.

> The sample (~1 gallon) contained 24% soil, 10% alfalfa, 41% horse feed, and 25% horse stable waste. The sample was moist when received and the first step was to dry the material in plastic trays (approximately 4" x 6" x 3") in a ventilated oven using room temperature air. The sample was dried overnight until visually dry and dry by feel. The material was hand processed to break-up clods then the sample was poured into the loading funnel of the mill (approximately 3/4 pint). The mill is located within a ventilated lab hood and the mill is operated with the operator in attendance. Occasionally the material would clog and the operator would have to

---

1 Information from Steve Wilson, U.S.G.S. Geochemistry Section

2 All dimensions are approximate to give a rough idea of the size

FCR PS007

push the material using a wooden dowel. After the material passes through the screen and is collected, it is removed and the sample is split using a Jones Splitter.

The operator wore rubber gloves while manually sorting the material; however after sorting the only personnel protection was safety glasses. After the grinding operation, the mill was cleaned by disassembly, blowing with air, then washing with acetone. No unusual occurrences were observed during the milling operation.

HAZARD REVIEW

The use of a Wiley Mill in the homogenization of composted explosive soil has been reviewed for possible hazards. Only the unique hazards that are associated with the use of explosive contaminated soils in the Wiley Mill are addressed in this review; thus routine safety problems involving operation of this type of equipment (e.g. operator injury by the mechanical action of the mill, electric shock, improper operation) or the use of flammable solvents (i.e. acetone for cleaning) will not be discussed. It is felt that a laboratory, such U.S.G.S. has the experience to deal with these kinds of problems. Table III identifies several scenarios by which the explosive sample may be initiated and represent potential hazards with the Wiley Mill.

By the nature of the design and construction of the Wiley Mill, there are initiation sources readily available during operation. Table I lists the sensitivity of typical explosives and explosive contaminated soil. The cutting blades normally rotate against the bars with only a small clearance, which could be negated by wear, misalignment, or improper assembly. The mill operates at 800 rpm so the cutter blades move at a speed greater than 10 ft/sec, which is higher than the speed for which we have sensitivity data. This means that there can be sufficient stimuli to initiate the explosive in the soil. Table III identifies other possible initiation sources.

The safe operation of the Wiley Mill in this service does not depend so much on the avoidance of potential initiation stimuli as controlling the extent of possible reactions. Table II presents the reactivity of various explosive/sand samples. It is concluded from these data plus other corroborative results[6], that there should be no explosive reaction from any sample with less that 10 % explosive. [NOTE: These studies did not considered primary explosives so the results may not be valid if a sample contains primary explosives. The current effort, as well as the review of the Composter, is applicable to soils containing explosives such as TNT, RDX, HMX, etc.] Since the homogenization sample contain at most 4 % explosive, there should be no explosive reaction even if there is initiation within the mill. If there is sufficient initiation stimuli present, it is expected that there could be localized initiation of the explosive within the sample. This, in turn, might be immediately extinguished for lack of fuel or it may lead to a fire in flammable organic matter or other explosive in the sample. The worse case expected if initiation occurs in the mill is a mild fire.

FCR PSOC 7
Rev 8/1/95

Table III lists other less likely sources of ignition for the sample.

- If the mill continues to run with material in the grinding chamber, heat may build up eventually leading to thermal initiation. It is recommended that the mill be stopped when there is no output. A reasonable time for grinding the sample should be established and an excessive time should trigger a shutdown.

- If contaminated soil contacts electrical equipment, there could be initiation through thermal means or from exposure from an electric spark. Any sample spill or contamination should be cleaned promptly and the equipment should be grounded.

- If the sample is excessively dusty and a dust cloud is generated, ignition could be caused by a spark from electrical equipment or an operator. This combination of events is possible but not considered very likely.

- Should the mill clog or stop feeding, a common occurrence, the operator should use a non-metallic tool to restart the feed. Use of a metal tool increased the chance for localized initiation of explosive in the sample.

If the homogenization process were designed from scratch, different or modified equipment (e.g. dust rated electrical equipment) or process (e.g. remotely operated, conductive flooring) might be selected. However; the process should be able to conducted safely in a non-explosive rated area if the above suggestions are followed. The most important single precaution is assuring that the sample contains a maximum of 4% explosive. In all steps from selecting the sample, through preparing for shipment, receiving, drying, and preparation for grinding operators should be on the look-out for excessive explosive such as pockets of pure explosive that could cause a more severe reaction. A good opportunity for this inspection is during the breaking up of clods prior to loading the mill.

Operators performing the grinding should be trained in the importance of proper operation of the mill, keeping the area clean, visually inspecting the sample, and not deviating from approved procedures. It is suggested that the grinding continue to be done in a ventilated hood with the shield lowered when the mill is running. Eye protection goggles or glasses with side shields should be required as well as fire retardant gloves and arm protection (e.g. long Nomex^R gloves). If the front shield must be raised during operation, the operator should have additional fire protection such as flame retardant coveralls and a face shield. The level of protection should be consistent with a fire, not an explosion, since the sample should be non-explosive but not necessarily non-flammable.

FCRPS007
Apr 8/17/97

REFERENCES

1. J. H. Tate and T. A. Groce, "Hazard Review of the Fairfield Pilot Composter for the Treatment of Explosive Contaminated Soil," HERC No. 89-50, November 1989

2. A. T. Rucera, "Hazards Analysis of Incinerator Feed System," HERC No. 86-2, January 1986

3. R. J. Welberry, "Sensitivity Testing of Composted Samples," HERC No. 88-61, October 1988

4. "Engineering Design Handbook - Properties of Explosives of Military Interest," U. S. Army Materiel Command Pamphlet AMCP 706-177, January 1971

5. Kristoff, F.T., Ewing, T.W., & Johnson,D.E., "Testing to Determine Relationship between Explosive Contaminated Sludge Components and Reactivity," Final Report to USATHAMA prepared by Arthur D. Little Inc., January 1987

6. L. S. Treadwell, "Final Report - Reactivity Testing of Explosive Contaminated Soil Samples," Hercules Incorporated/Allegany Ballistics Laboratory, HERC No. 86-06, January 1986

TCR FS007
eff. 8/17/97

TABLE I

TYPICAL SENSITIVITY DATA FOR
EXPLOSIVE CONTAMINATED SOIL AND SELECTED EXPLOSIVES

ATERIAL	TEST[3]	THRESHOLD INITIATION LEVEL	REMARKS
sive iinated Soil	Friction, MPa	Range from 234 to 306 @ 3m/s & 380 to 520 @ 0.9 m/s	Dried Lagoon Sludge[4]
	Impact, J/sq m	Range from 0.8 E4 to 13.9 E4	Dried Lagoon Sludge[1]
	Impact, J/sq m	4.75 E4	Composted Sample[5]
	ESD, J	Range from 0.024 to 0.5	Dried Lagoon Sludge[1]
TNT	Friction, MPa	585 @ 2.4 m/s	Hercules Data
	Impact, J/sq m	5.25 E4	Hercules Data
	ESD, J	0.075	Hercules Data
	Impingement, m/s	193 [5/8x5/8" dia sample] 46 [1-5/8x5/8" dia sample]	Hercules Data Hercules Data
	Initiation Temp., deg C	570 @ 0.1 sec 465 @ 10 sec 328 @ 50 sec 275 @ 12 min 240 @ 30 min	AMCP 706-177 [6]
	Crit Ht-to-Exp @ 2 in dia	12 in	Hercules Data
	Crit. Dia.	< 0.27 in	Hercules Data

FRICTION & IMPACT TESTS CONDUCTED WITH STEEL-ON-STEEL COMPONENTS

REFERENCE 2

REFERENCE 3

REFERENCE 4

FOR PSOO 7
8/17/93

TABLE I (Con't)

TYPICAL SENSITIVITY DATA FOR
EXPLOSIVE CONTAMINATED SOIL AND SELECTED EXPLOSIVES

ATERIAL	TEST	THRESHOLD INITIATION LEVEL	REMARKS
HMX	Friction, MPa	220 @ 2.4 m/s	Hercules Data
	Impact, J/sq m	0.27 E4	Hercules Data
	ESD, J	0.075	Hercules Data
	DSC Exotherm Temp., deg C	250 Onset	Hercules Data
	Initiation Temp., deg C	380 @ 0.1 sec 306 @10 sec	AMCP 706-177
	Crit. Ht-to-Exp	3 in	Hercules Data
	Crit. Dia.	< 0.27 in	Hercules Data
RDX otrimethylene initramine]	Friction, MPa	313 @ 2.4 m/s	Hercules Data
	Impact, J/sq m	2.7 E4	Hercules Data
	ESD, J	0.075	Hercules Data
	Impingement, m/s	207	Hercules Data
	DSC Exotherm Temp., deg C	216 Onset 242 Peak	Hercules Data
	Initiation Temp., deg C	405 @ 0.1 sec 235 @ 15 sec	AMCP 706-177
	Crit Ht-to-Exp	2 in	Hercules Data
	Crit Dia.	< 0.27 in	Hercules Data

FCR PSCL 7
app. 8/17/5?

TABLE II

REACTIVITY OF EXPLOSIVE/SAND/WATER MIXTURES[7]

SAMPLE	TEST	RESULT	REMARKS
RDX WATER	CRITICAL DIAMETER	< 0.25 INCH	1.05 g/cc Density RADFORD TEST
RDX WATER SAND	CRITICAL DIAMETER	1.5 INCH	1.26 g/cc Density RADFORD TEST
RDX WATER SAND	CRITICAL DIAMETER	2.0 INCH	1.25 g/cc Density RADFORD TEST
	DEFLAGRATION-TO-DETONATION (DDT)	1 of 10 POSITIVE REACTIONS	1.33 g/cc Density RADFORD TEST
	ZERO GAP	0 OF 20 POSITIVE REACTIONS	1.34 g/cc Density RADFORD TEST
R WATER SAND	DDT	0 OF 20 POSITIVE REACTIONS	1.43 g/cc Density RADFORD TEST
TNT WATER SOIL	# 8 CAP	5 TRIALS - NO FIRES; NO EXPL ABL TEST	Sample Spiked w/ 10 % TNT[8]
	SPARK	5 TRIALS - NO FIRES; NO EXPL ABL TEST	

7 EXCERPTED FROM REFERENCE 5

8 REFERENCE 6

FOB-PSEC 7
aff. 8/1/71

TABLE II (Con't)

REACTIVITY OF EXPLOSIVE/SAND/WATER MIXTURES

SAMPLE	TEST	RESULT	REMARKS
TNT WATER SOIL	THERMAL STABILITY [48 HR @72 DEG C]	1 TRIAL - NO IGN; NO DECOMPOSITION ABL TEST	THIS SAMPLE SPIKED WITH 10 % TNT[6]
	BOE IMPACT	0 OF 10 POSITIVE REACTIONS	ABL TEST
	FRICTION	0 OF 5 TRIALS @ 330 LBF AND 8FPS ABL TESTS	
	ELECTROSTATIC DISCHARGE	10 TRIALS - NO REACTIONS @ 0.024 JOULE	ABL TEST
	DOT	NO REACTIONS - w/10 or 20 GRAM IGNITERS	ABL TEST
	U S GAP	3 TRIALS; NO DAMAGE TO WITNESS PLATE	ABL TEST
	FIRE TEST	1 TRIAL; NO REACTION	ABL TEST

FCR FSOC 7
4/28/17/

TABLE III

POTENTIAL INITIATION SCENARIOS FOR
OPERATION OF THE WILEY MILL

HAZARD	INITIATION SOURCE	RESULT	REMARKS
utter blade strikes/rubs because of misalignment, roper installation, etc.	Impact and/or Friction Steel/Steel	Localized initiation of explosive	Should be no explosion
lade strikes foreign erial (Metallic) in ple being processed	Spark or Friction Steel/Metal	Localized initiation of explosive	
utter blade strikes -metallic foreign material one, etc.) in the sample ng processed	Friction Steel/stone	Possible localized initiation of explosive; damage to blades	
ill output slows or os lowing heat build-up	Thermal	Possible localized initiation of explosive	
mple excessively dusty; k available from trical equipment or a operator	Electric spark or Electrostatic Discharge	Initiation of dust cloud	Not very likely; requires dust cloud formation
mple contaminates trical equipment	Electrical spark	Initiation of dust layer	Remove sample spills immediately
mple contamination wed to remain on trical equipment	Thermal	Initiation of dust layer	Remove sample spills immediately
erator clears clogged with improper tool	Impact or Friction Steel/Metal	Localized initiation of explosive	Use only proper, non-metallic tools

FCR PSC07
eff 8/17/97

TABLE III (Con't)

POTENTIAL INITIATION SCENARIOS FOR
OPERATION OF THE WILEY MILL

HAZARD	INITIATION SOURCE	RESULT	REMARKS
Operator steps on spilled mple	Friction Leather/concrete	Possible localized initiation of explosive	Remove sample spills immediately
Sample contains excessive plosive	Impact or Friction Steel/Steel	Initiation of sample; fire and strong reaction	SEE TEXT

APPENDIX C

BIOREMEDIATION FACILITY DRAWINGS

LIST OF DRAWINGS

G-100	Bioremediation Facility, Crane NSWC, Master Site/Drainage Plan
4324-0009-01-A	NSWC Crane, Soil Remediation Facility Process Flow
4324-0009-01-B	NSWC Crane, Wastewater Collection Process Flow
4324-0009-01-C	NSWC Crane, Soil Excavation Site Process Flow
P-100	Bioremediation Facility, Amendment Loading - Windrows #1-4
P-101	Bioremediation Facility, Amendment Loading - Windrows #5-8
P-102	Bioremediation Facility Soil Loading - Windrows #1-4
P-103	Bioremediation Facility Soil Loading - Windrows #5-8

NSWC MINE FILL A UTILITY AND FOUNDATION DRAWINGS

176293	***Box Emptying Bldg 153 & TNT Storage Bldg 154, Plant A***
176295	***Box Emptying & TNT Storage Bldgs, 1st Floor Framing & Foundation Plans***
176296	***Box Emptying & TNT Storage Bldgs, 2nd Floor & Roof Framing Plans***
176297	***Box Emptying & TNT Stroage Bldgs, 1st Floor Plans & Elevations***
176299	***Box Emptying & TNT Storage Bldgs, Sections & Elevations***
176300	***Box Emptying & TNT Storage Bldgs, Sections & Details***
176301	***Box Emptying & TNT Storage Bldgs, Windows & Door Details***
176302	***Box Emptying & TNT Storage Bldgs, Conveyors & Equipment***
180484	***"A" Area - Conveyor No. 2 Between Bldg 152 & 153***

LIST OF DRAWINGS (CONTINUED)

187419	*Box Emptying & TNT Storage Bldgs, Box Conveyor General Drawing*
187421	*Box Emptying & TNT Storage Bldgs, Details of Box Top Conveyor*
571931	*MFA Plot Plan - General & Steam*
571933	*MFA Plot Plan, Elevations, Telephone, Fire Al., Water, and Sanitary Sewer*

FCRPSOL 1

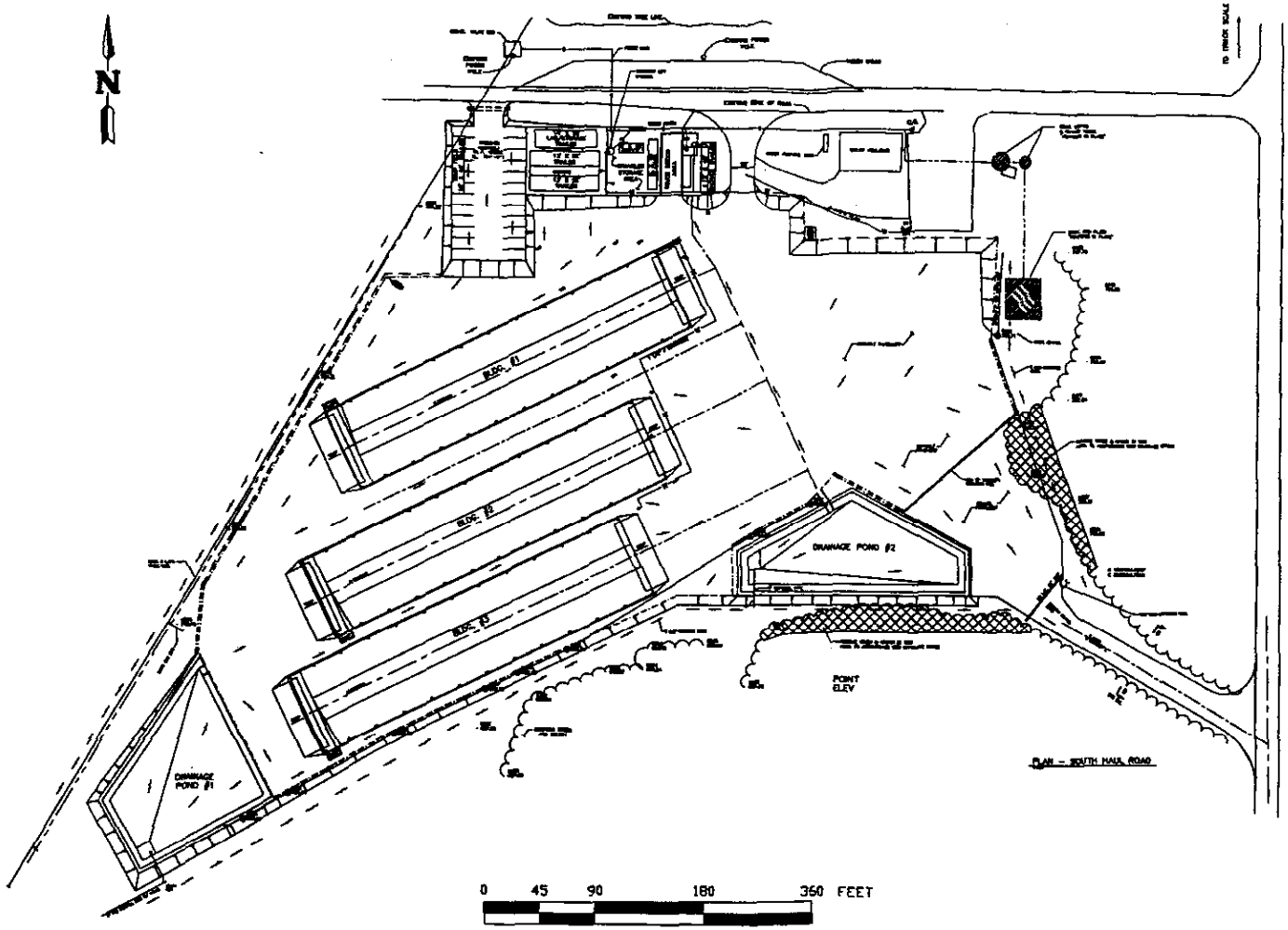

LEGEND

- DENOTES DRAINAGE FLOW
- DENOTES ASPHALT BERM
- 5100 / 710.04 DENOTES EXISTING POWER POLE
- DENOTES EXISTING SANITARY SEWER MANHOLE
- DENOTES NEW WATER LINE (INSTALL 3' BELOW GRADE)
- SANITARY SEWER LINE

0 45 90 180 360 FEET

SCALE

PILOT SCALE
OPERATIONAL PLAN
NSWC CRANE
CRANE, IN

MORRISON KNUDSEN CORPORATION
ENVIRONMENTAL SERVICES

FIGURE G-100
BIOREMEDIATION FACILITY
MASTER SITE PLAN

SOURCE: JACOBS ENGINEERING GROUP | DWG DATE: 6/24/97 | DWG NAME: G-100

FCRFS001

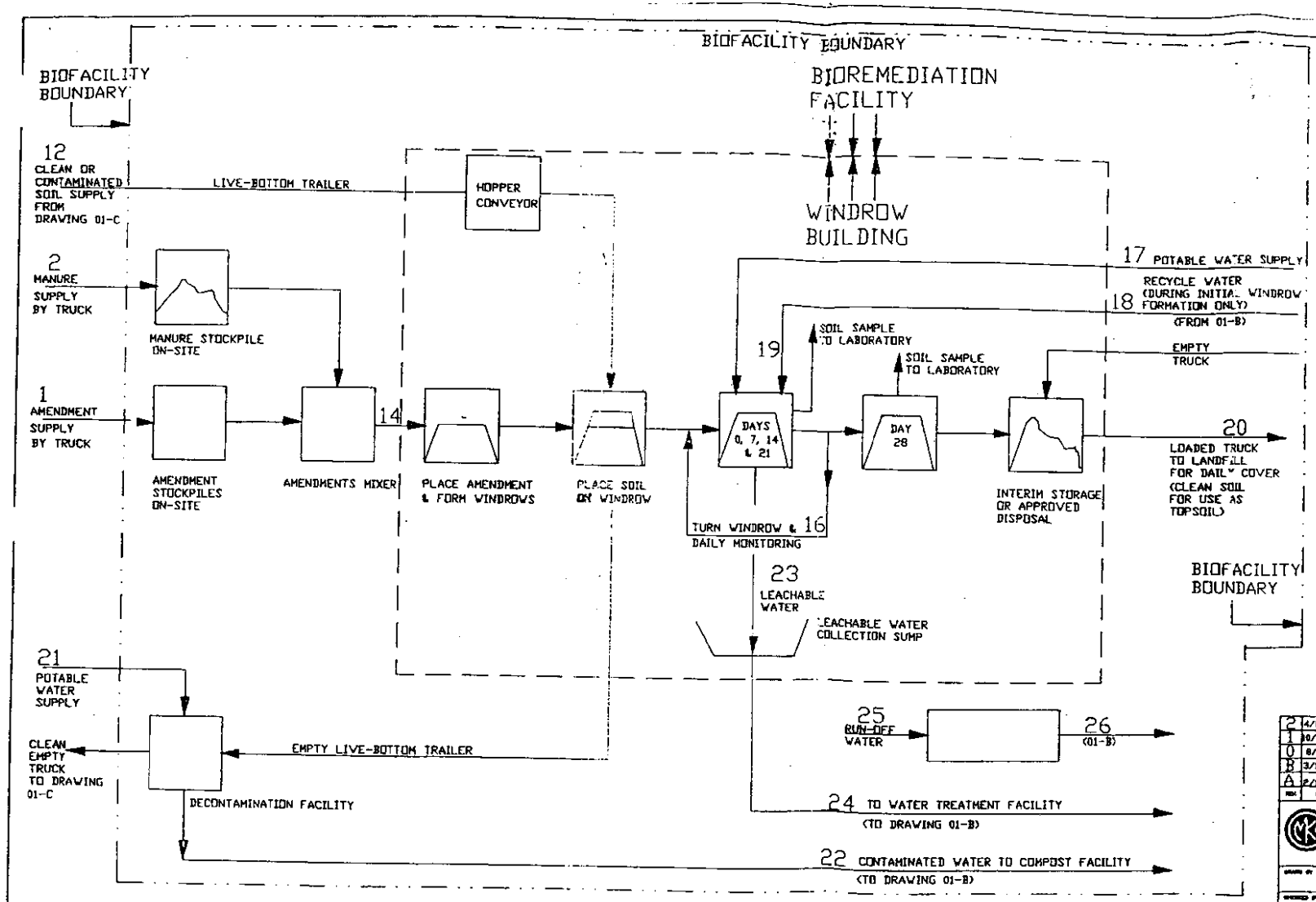

REV	DATE	DESCRIPTION
2	4/15/97	FOR FINAL REVIEW COMMENTS
1	10/21/96	FOR PILOT SCALE APPROVAL
0	8/1/96	FOR APPROVAL
B	3/15/96	FOR REVIEW
A	2/19/96	FOR REVIEW

MORRISON KNUDSEN CORPORATION
ENGINEERING, CONSTRUCTION AND ENVIRONMENTAL GROUP
MK-FERGUSON PLAZA 1500 WEST 3RD STREET
CLEVELAND, OHIO 44113-1406 (216) 383-5600

DRAWN BY: RV
CHECKED BY: ST

NSWC CRANE
SOIL REMEDIATION FACILITY

DON MILLER
SCALE: N/A

4324-0009-01-A

FOR PSCC 1

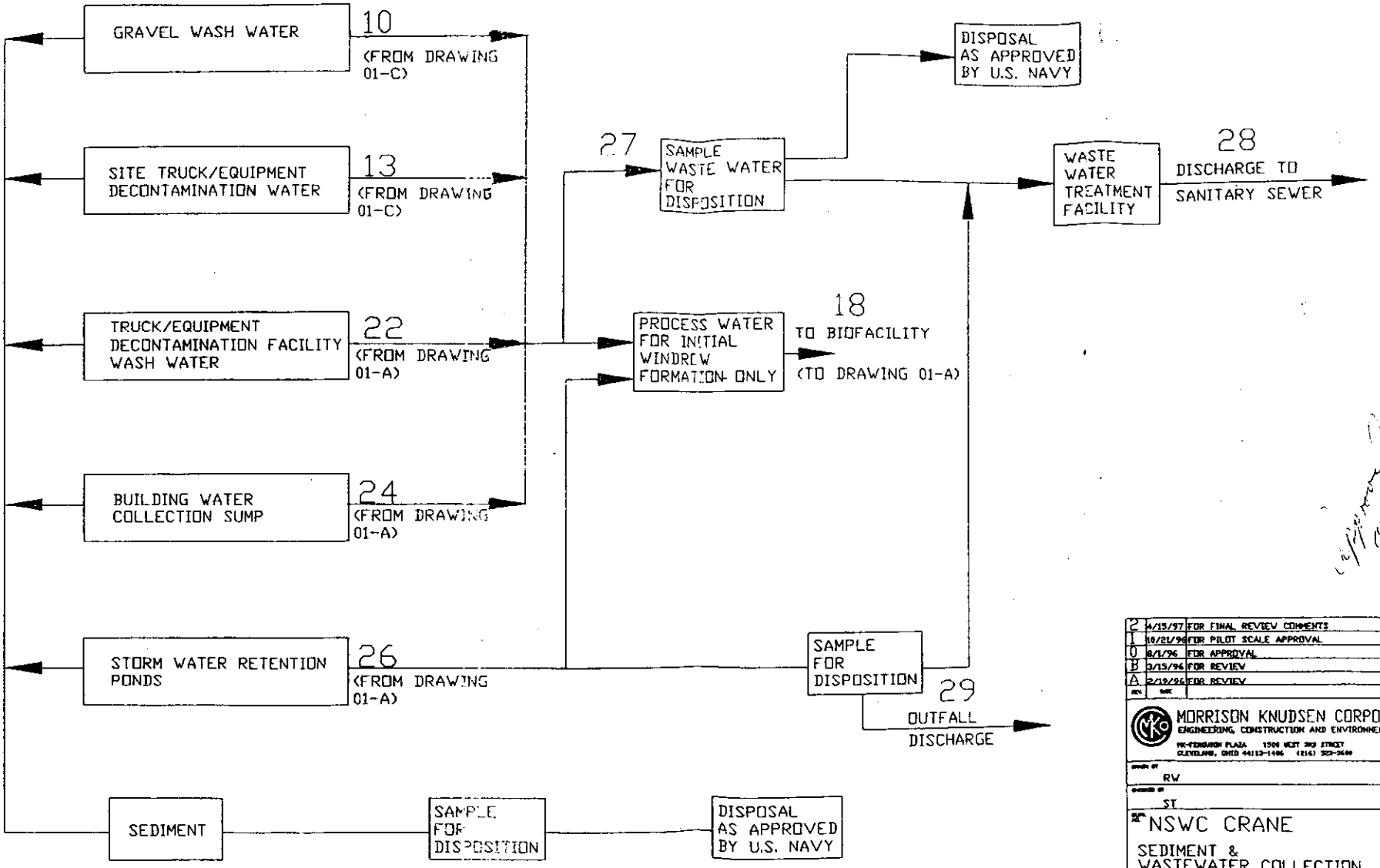

REV	DATE	
2	4/15/97	FOR FINAL REVIEW COMMENTS
1	10/21/96	FOR PILOT SCALE APPROVAL
0	8/1/96	FOR APPROVAL
B	3/15/96	FOR REVIEW
A	2/19/96	FOR REVIEW

MORRISON KNUDSEN CORPORATION
ENGINEERING, CONSTRUCTION AND ENVIRONMENTAL GROUP
MK-FERGUSON PLAZA 1500 WEST 3RD STREET
CLEVELAND, OHIO 44113-1406 (216) 323-3600

DRAWN BY RW

CHECKED BY ST

NSWC CRANE

SEDIMENT & WASTEWATER COLLECTION

DRAWN DON MILLER

SCALE N/A

4324-0009-01-B

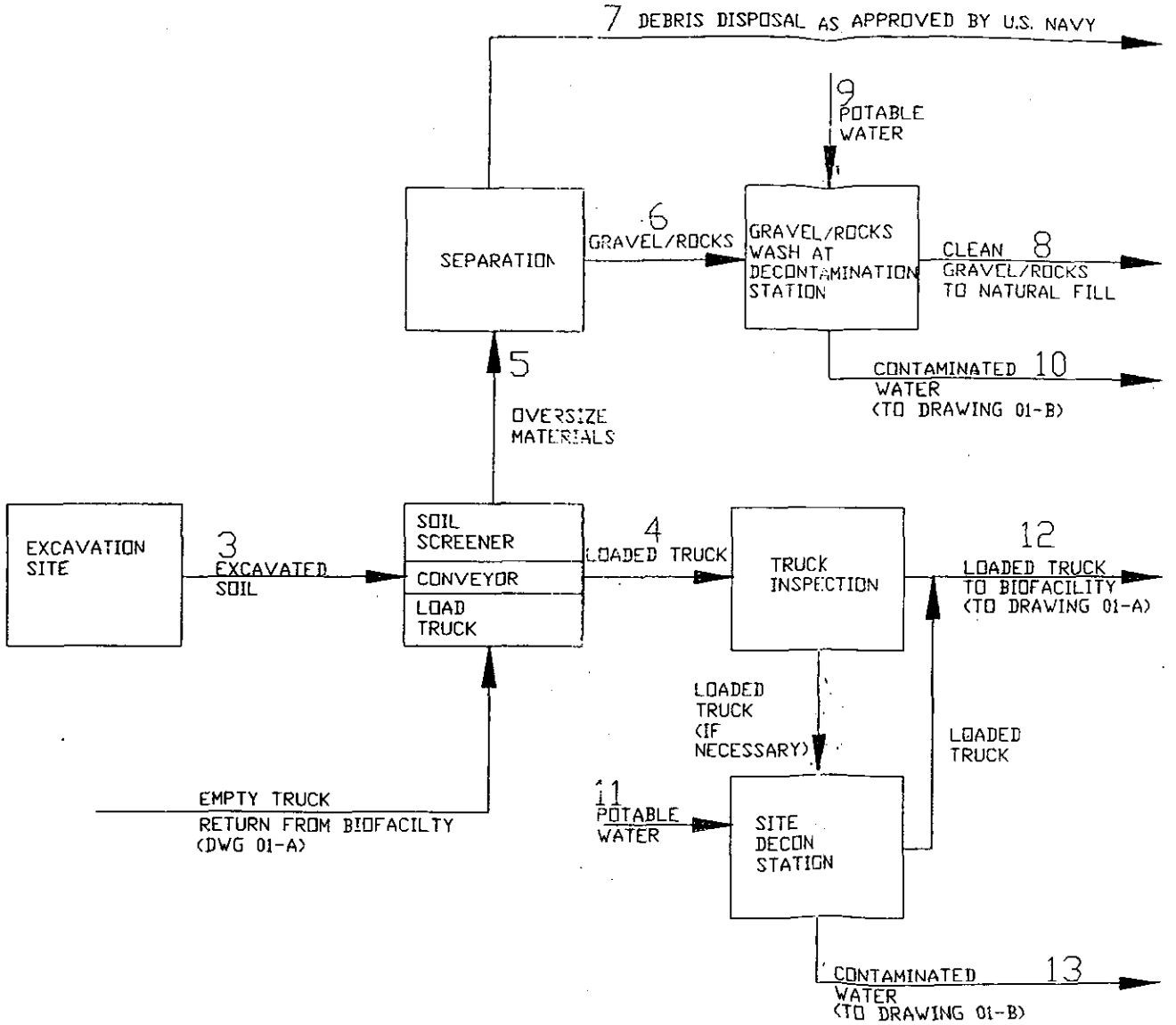

REV	DATE	
2	4/15/97	FOR REVIEW COMMENTS
1	10/21/96	FOR PILOT SCALE APPROVAL
0	8/1/96	FOR APPROVAL
B	3/15/96	FOR REVIEW
A	2/12/96	FOR REVIEW

MORRISON KNUDSEN CORPORATION
ENGINEERING, CONSTRUCTION AND ENVIRONMENTAL GROUP
MK-FERGUSON PLAZA 1300 WEST 3RD STREET
CLEVELAND, OHIO 44113-1406 (216) 383-5600

DRAWN BY: RV
CHECKED BY: ST

NSWC CRANE
SOIL EXCAVATION SITE

DON MILLER
SCALE: N/A

4324-0009-01-C

FCR 80-1

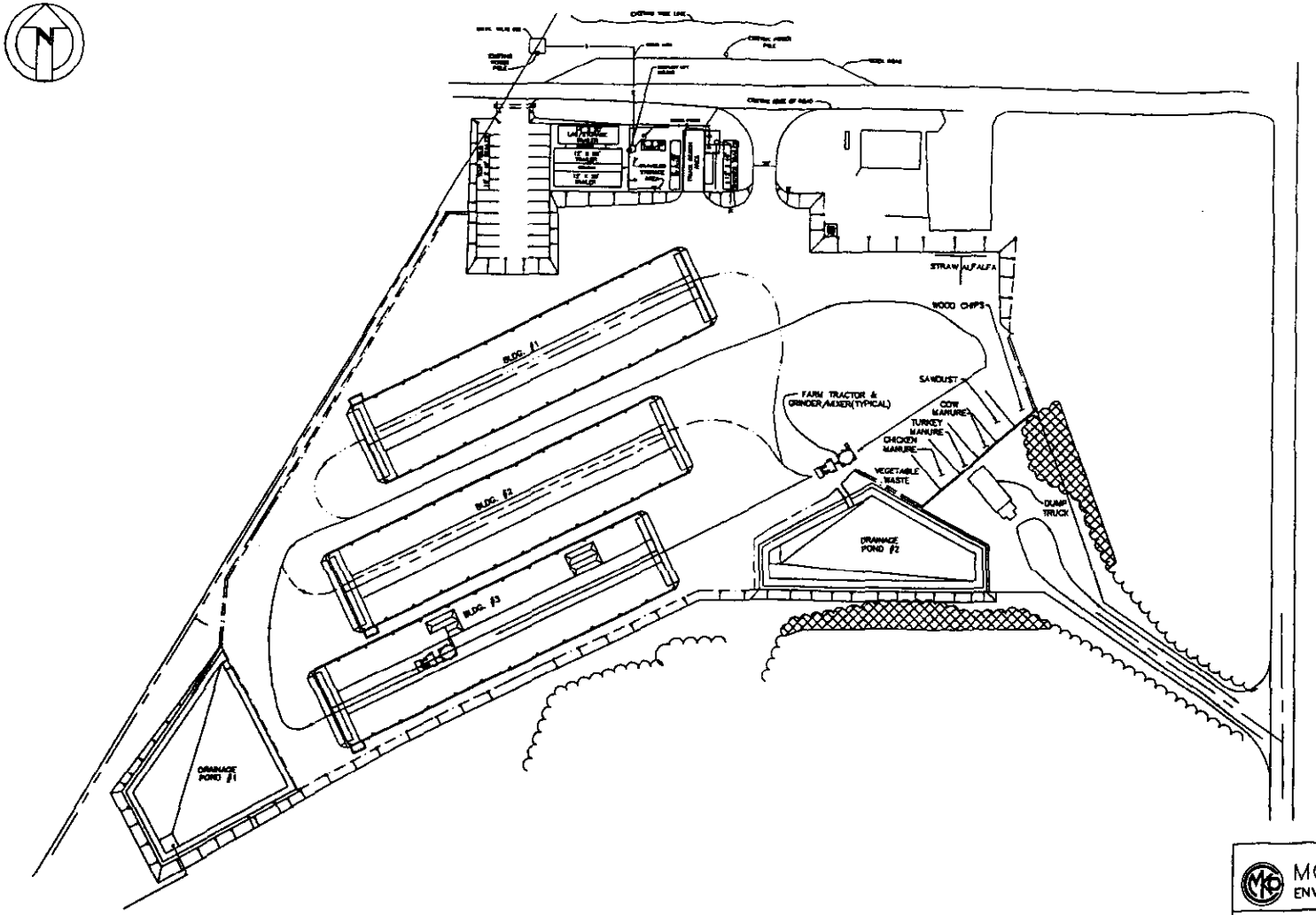

Approved 3/14/97

MORRISON KNUDSEN
ENVIRONMENTAL GROUP

BIOREMEDIATION FACILITY
CRANE N.S.W.C.
AMENDMENT LOADING WINDROWS 1-4

P-100	6-24-97	REV. 4

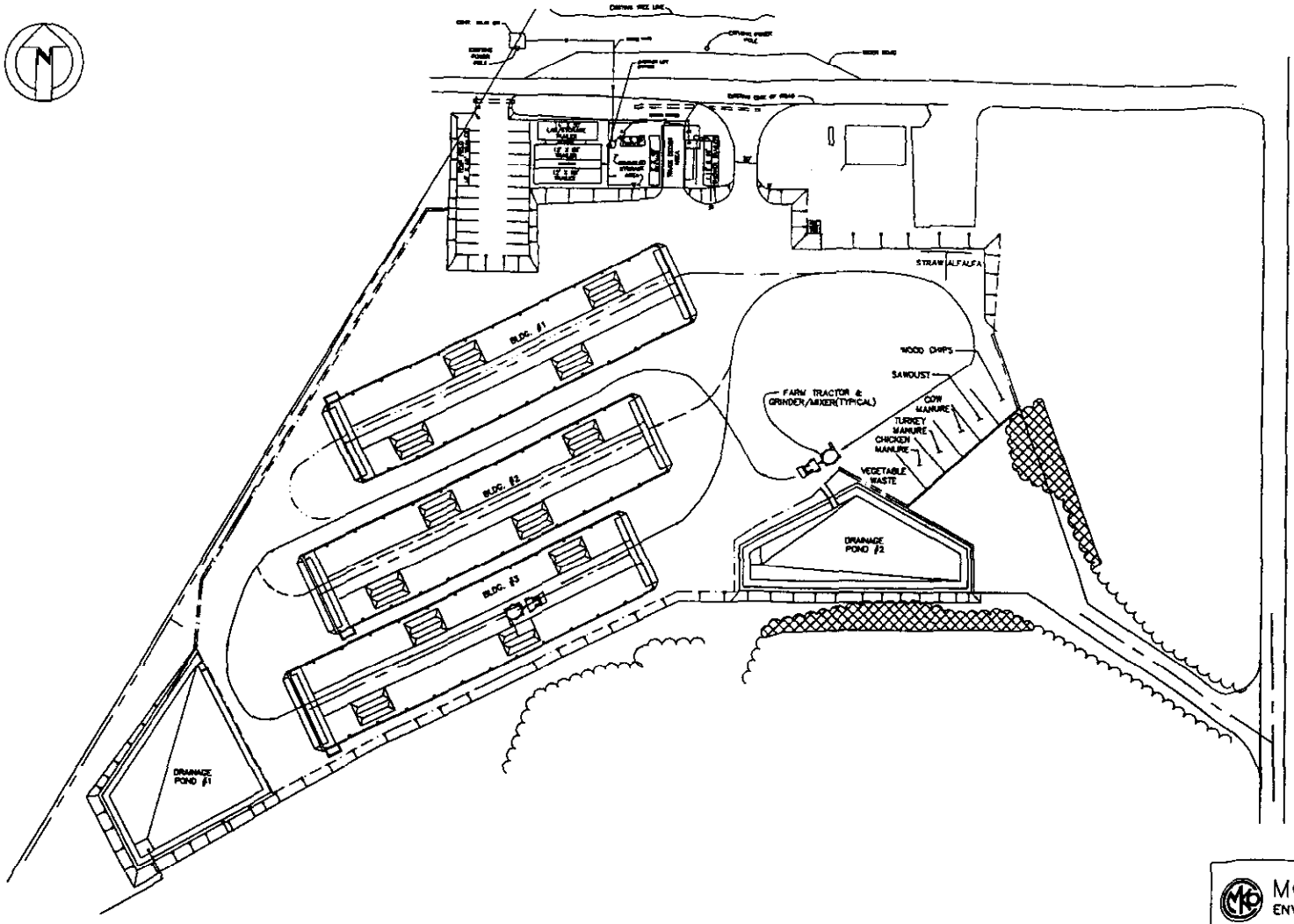

MORRISON KNUDSEN
ENVIRONMENTAL GROUP

BIOREMEDIATION FACILITY
CRANE N.S.W.C.
AMENDMENT LOADING WINDROWS 5-8

P-101	6-24-97	REV. 4

FCR13CC1

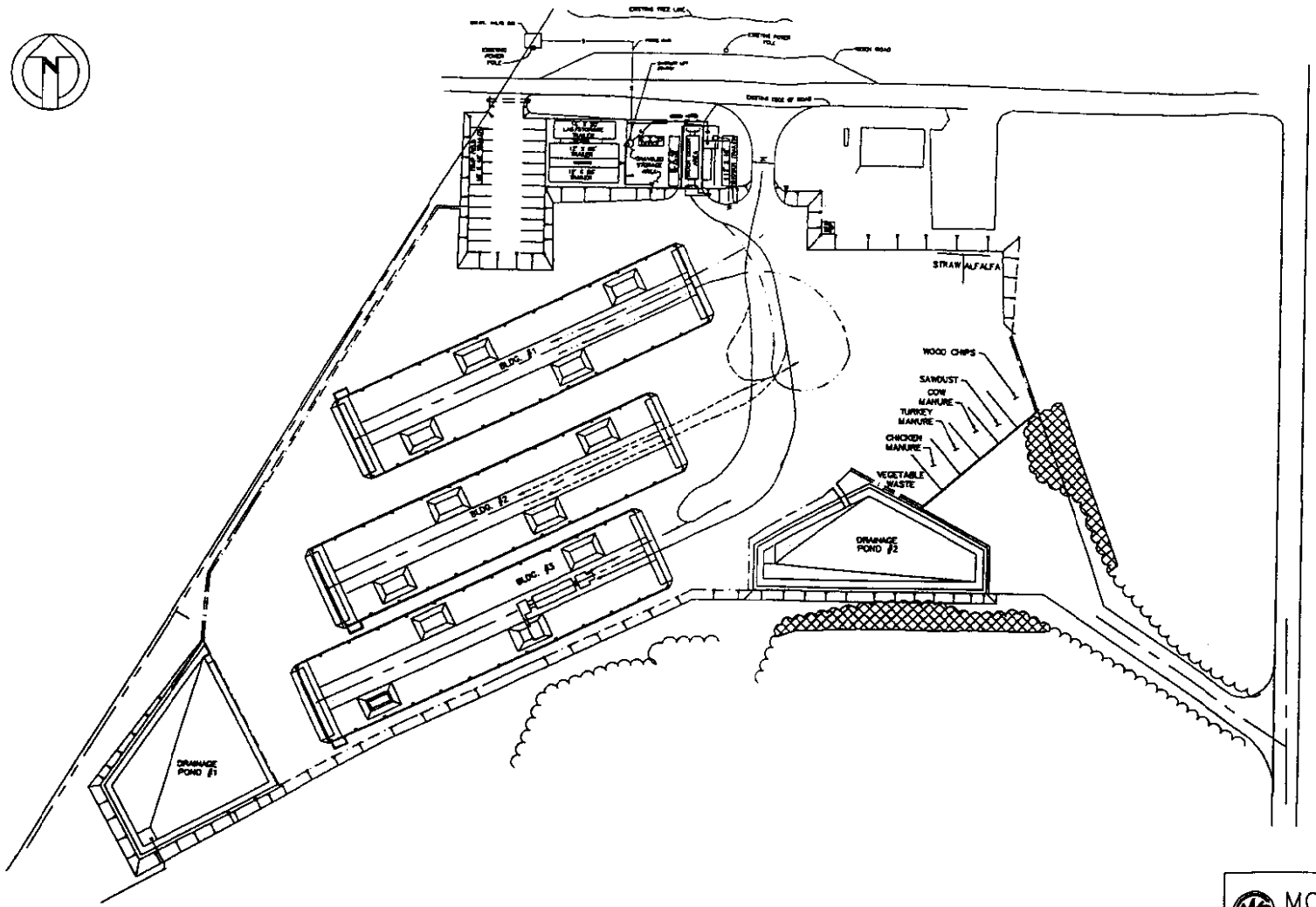

Approved
8/14/97

MORRISON KNUDSEN
ENVIRONMENTAL GROUP

BIOREMEDIATION FACILITY
CRANE N.S.W.C.
SOIL LOADING WINDROWS 1-4

P-102	6-24-97	REV. 4

FC LF5001

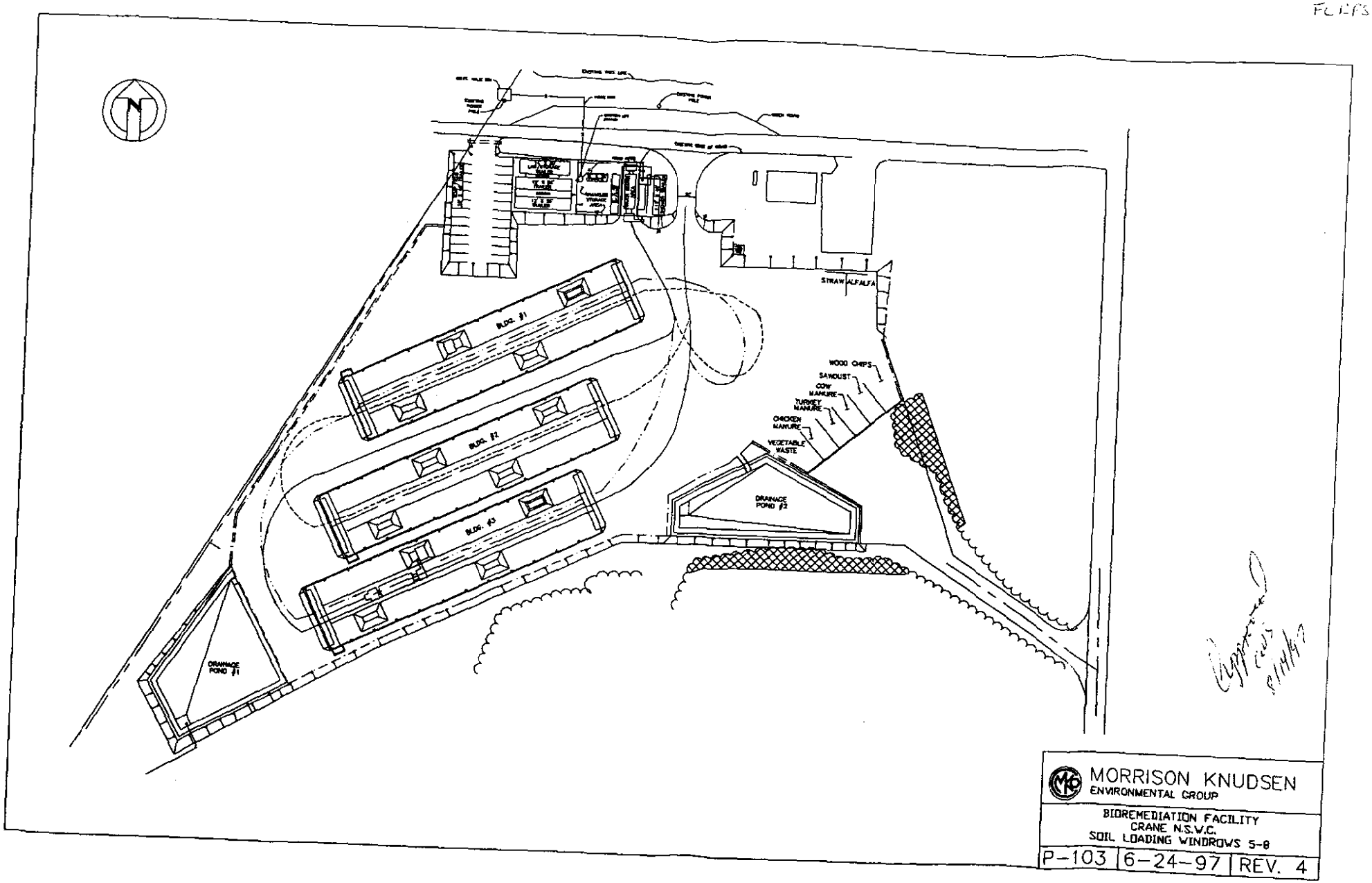
BLDG. #1
BLDG. #2
BLDG. #3
DRAINAGE POND #1
DRAINAGE POND #2
STRAW
ALFALFA
WOOD CHIPS
SAWDUST
COW MANURE
TURKEY MANURE
CHICKEN MANURE
VEGETABLE WASTE
MORRISON KNUDSEN
ENVIRONMENTAL GROUP
BIOREMEDIATION FACILITY
CRANE N.S.W.C.
SOIL LOADING WINDROWS 5-8
P-103
6-24-97
REV. 4

APPENDIX D

STANDARD OPERATING PROCEDURES

LIST OF STANDARD OPERATING PROCEDURES

SOP 1.0	*Measurement and Monitoring of Field Parameters*
SOP 2.0	*Sample Collection for Off-site Laboratory Analysis*
SOP 3.0	*Decontamination of Facilities, Equipment, and Personnel*
SOP 4.0	*Amendment Proportioning and Mixing*
SOP 5.0	*Loading of Amendments into Windrows*
SOP 7.0	*Soil Screening Operation*
SOP 8.0	*Windrow Turning and Moisture Addition*
SOP 9.0	*Truck Scale Operation*
SOP 10.0	*Time Integrated Industrial Hygiene Air Sampling*
SOP 11.0	*Occupational Noise Monitoring*
SOP 12.0	*Biological Process Monitoring Procedure*

1.0 PURPOSE

This procedure describes the methods which will be used to establish field measurement locations; and measure the temperature, moisture content, pH, and oxygen level of windrowed soil. Quality assurance requirements for field measurements are described in Appendix F ~~to the~~ **of this** Pilot Scale Operational Plan.

2.0 ESTABLISH SAMPLING AND MONITORING LOCATIONS

This section describes the procedure to be followed for establishing the field measurement locations.

2.1 Tools and Materials

The following tools and materials are required to establish field measurement locations:

measuring tape (50-foot minimum)
dedicated 4 ft 7 in.-long measuring stick marked with six-inch intervals
dedicated pin flags or stakes
field logbook
indelible pen

2.2 Establish Field Measurement Locations

Cross-section Locations

Each windrow will be divided into four cross-sections, labeled A through D as shown in Figure 1-1 **and Figure 1-1A,** of this SOP. Cross-section locations will be measured and marked after each time the windrow is turned. The following procedure will be used to establish cross-section locations:

1. Locate cross-section A by measuring a distance of 5 feet from the east end of the windrow along the long axis. Place a pin flag or stake on top of the pile at this location.

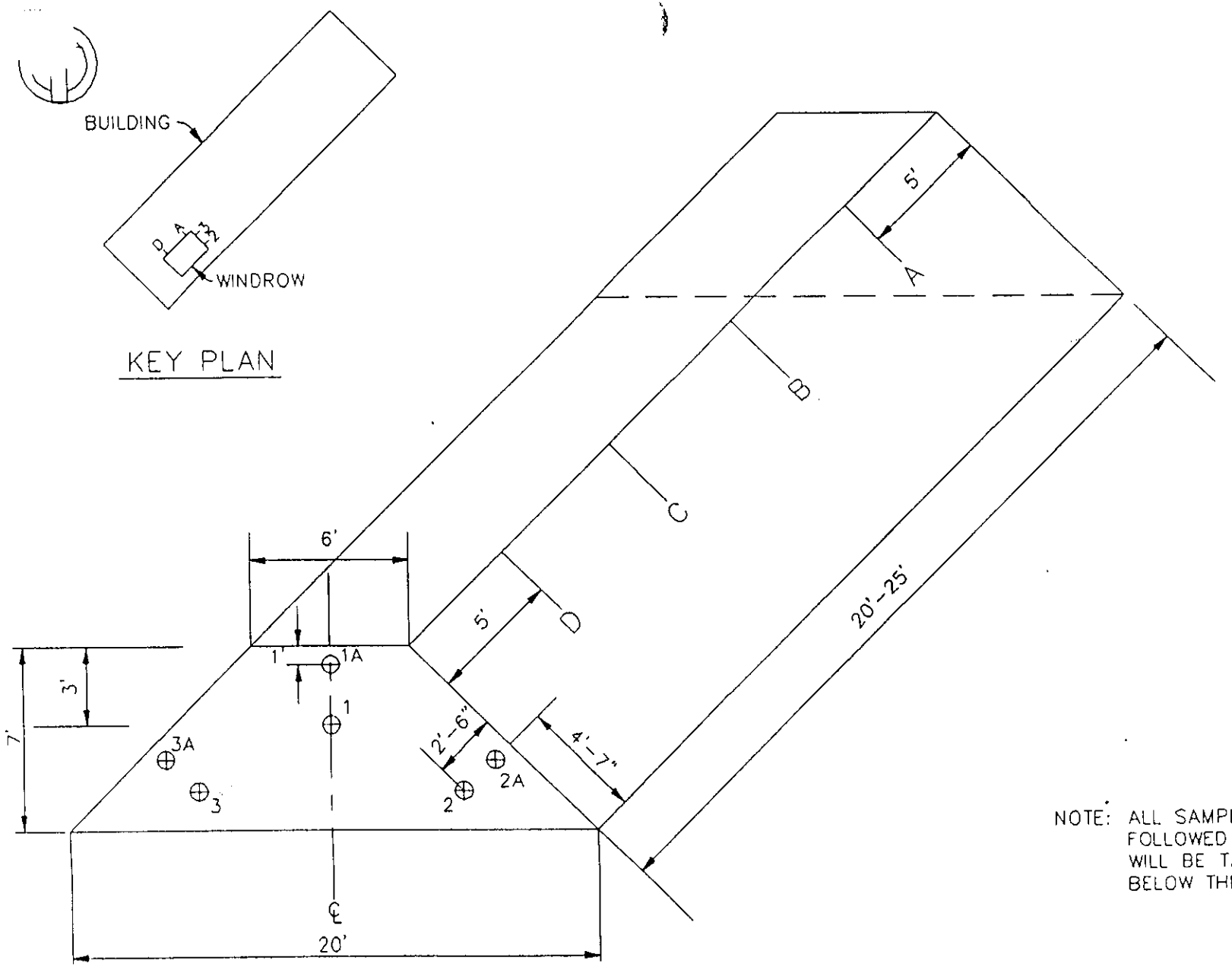

NOTE: ALL SAMPLE NUMBERS FOLLOWED BY AN "A" WILL BE TAKEN AT 1' BELOW THE SURFACE.

PILOT SCALE
WINDROW SAMPLE LOCATIONS

MORRISON KNUDSEN CORP	
Drawing FIGURE 1-1	Rev 2
Date 4/11/97	Sheet 1

NOTE: ALL SAMPLE NUMBERS FOLLOWED BY AN "A" WILL BE TAKEN AT 1' BELOW THE SURFACE.

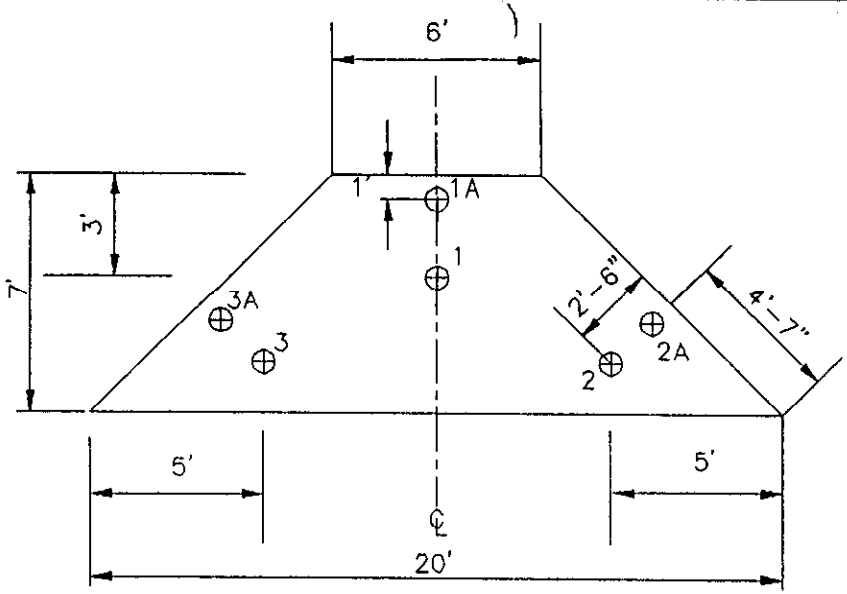

SECTION A–A

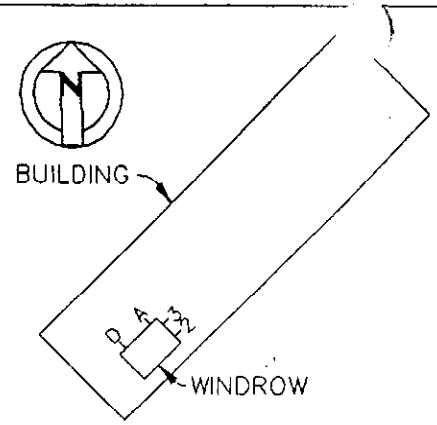

KEY PLAN

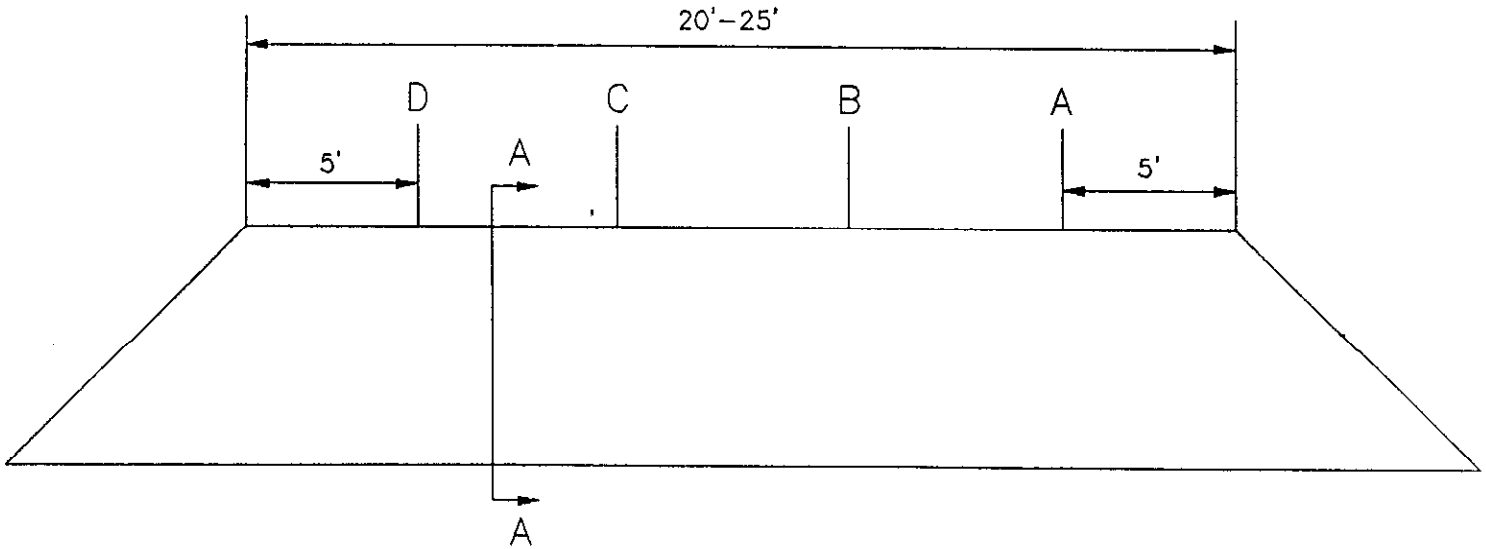

PILOT SCALE
WINDROW SAMPLE LOCATIONS

MORRISON KNUDSEN CORP.	
Drawing FIGURE 1–1A	Rev. 3
Date 5/16/97	Sheet 1

DRAWING NAME: F:\WDKYSER\CRANE\TWOSV.DWG

2. Locate cross-section D by measuring a distance of 5 feet from the west end of the windrow along the long axis. Place a pin flag or stake on top of the pile at this location.

3. Measure the distance between the marker at cross-section A and the marker at cross-section D. Document the measurement in the field logbook along with date, time, and windrow number. Divide the measured length by three. Take the resulting value and measure that distance (to the nearest 6 inches) from cross-section A towards the center of the pile along the long axis. This is the location of cross-section B. Place a pin flag or stake on top of the pile at this location. Locate cross-section C between cross-sections B and D, an equal distance from both. Place a pin flag or stake on top of the pile at this location.

4. Double check the measurements by making sure the distances between cross-sections A and B, B and C, and C and D are all equal within ±3 inches; and cross-sections A and D are each located 5 feet from the ends of the windrow.

Field measurement locations

Six field measurement locations will be established at each of the four cross-sections. The correct depth for each measurement will be indicated by marked intervals on the shaft of the oxygen/temperature probe for oxygen and temperature measurements, or by inserting the marked measuring stick to the appropriate depth for moisture level and pH ~~measurements~~ **samples**. The following procedure will be used to locate the field measurement locations:

1. Sample location 1A is located on the longitudinal centerline of the pile at a depth of 1 foot below the top surface. Depending on the measurement to be made, insert the marked probe shaft or measuring stick to the 1-foot mark.

2. Sample location 1 is located on the longitudinal centerline of the pile at a depth of 3 feet below the top surface. Depending on the measurement to be made, insert the marked probe shaft or measuring stick to the 3-foot mark.

3. Sample location 2A is located on the south side of the pile at a depth of 1 foot below the surface. Lay the 4 ft 7 in. measuring stick on the south side of the pile from the ground surface up, and mark the point on the pile at the end of the stick. Depending on the measurement to be made, hold the marked probe shaft or measuring stick perpendicular to the side of the pile and insert to the 1-foot mark.

4. Sample location 2 is located on the south side of the pile at a depth of 2.5 feet below the surface. Lay the 4 ft 7 in. measuring stick on the south side of the pile from the ground surface up, and mark the point on the pile at the end of the stick. Depending on the measurement to be made, hold the marked probe shaft or measuring stick perpendicular to the side of the pile and insert to the 2.5-foot mark.

5. Sample location 3A is located on the north side of the pile at a depth of 1 foot below the surface. Lay the 4 ft 7 in. measuring stick on the north side of the pile from the ground surface up, and mark the point on the pile at the end of the stick. Depending on the measurement to be made, hold the marked probe shaft or measuring stick perpendicular to the side of the pile and insert to the 1-foot mark.

6. Sample location 3 is located on the north side of the pile at a depth of 2.5 feet below the surface. Lay the 4 ft 7 in. measuring stick on the north side of the pile from the ground surface up, and mark the point on the pile at the end of the stick. Depending on the measurement to be made, hold the marked probe shaft or measuring stick perpendicular to the side of the pile and insert to the 2.5-foot mark.

3.0 OXYGEN AND TEMPERATURE MONITORING

This section describes the procedure to be followed for collecting oxygen and temperature measurements within the compost windrows. **Procedures for decontamination of monitoring and sampling equipment are described in Field SOP 3.0 in this Appendix.**

3.1 Tools and Materials

The following tools and materials are required to collect oxygen and temperature measurements:

primary instrument - Demista Instruments Model OT-21 oxygen-temperature monitor
backup instrument (temperature only) - K-type thermocouple with hand-held temperature meter
4 ft 7 in.-long measuring stick marked with six-inch intervals
field logbook
indelible pen

3.2 Calibration

Demista Oxygen-Temperature Monitor

The Demista oxygen-temperature monitor can be calibrated only for percent oxygen. **Temperature calibration shall be performed at the instrument manufacturer's facility. The recommended calibration frequency is minimum once every 6 months based on daily use.**

Oxygen calibration is performed by activating the 'oxygen' mode, aspirating (squeezing and releasing the rubber bulb) several times, and noting the display reading. If the reading is other than 21%, the monitor is adjusted to '21' by turning the oxygen calibration screw with a small screwdriver. Calibration shall be documented in the field logbook.

K-type Thermocouple

~~There is no calibration procedure for the K-type thermocouple.~~

Calibration shall be performed at the instrument manufacturer's facility. The recommended calibration frequency is minimum once every 6 months based on daily use.

3.3 Measurement Procedure

The samples will be taken in the following order:

1. **In-situ reading of Oxygen.**
2. **In-situ reading of Temperature.**
3. **Sample withdrawn for on-site laboratory analysis of moisture and pH (Three times per week).**
4. **Sample withdrawn for off-site laboratory analysis (Days 0, 5, 10, 20, 30, 40, and 60).**

Oxygen measurements shall be collected prior to temperature measurements at all six monitoring locations at each cross-section **and shall be done prior to any samples being removed**. The following procedure shall be used to collect oxygen and temperature measurements with the Demista oxygen-temperature monitor:

1. ~~*Oxygen measurements shall not be collected prior to one hour following turning of the windrow.*~~ ***Post-turn oxygen measurements shall be collected as soon as practical after completion of the turning event. Preferrably within 15 minutes.***

2. Prior to the first reading of the day, calibrate the oxygen/temperature probe as described in Section 3.2 above. **Measurements will be taken** ~~*in a sequence of at the following*~~ **Locations: 1A *and 1at Grids A, B, C, and D;* 2A *and 2 at Grids A, B, C, and D*; 3A and** ~~*then*~~ **3 *at Grids A, B, C, and D.***

3. Insert the oxygen/temperature probe into the pile at each of the six locations at the four cross-sections described in Section 2.2 above. Oxygen measurements should always be made by inserting the probe into an undisturbed location so that the measurements are representative of the settled material, and not biased by void spaces or channels to the pile surface.

4. Activate the "oxygen" mode by pressing down the rear portion 'O' of the control switch on the monitor.

5. Aspirate 4-6 times, or until the reading stabilizes. Record the oxygen measurement ~~in~~ **on** the ~~field logbook~~ ***Daily Process Log Form,*** including date, time, and sample identification.

6. Aspirate 2 - 4 times. Activate temperature mode**, wait for reading to stabilize, and then** record the temperature measurement ~~in~~ **on** the ~~field logbook~~ ***Daily Process Log Form.***

7. **Decontamination shall occur according to Field SOP 3.0 in this Appendix, at the end of measuring each cross-section and windrow.**

Temperature Monitoring with the Thermocouple Probe and Temperature Meter

In the event that the Demista oxygen-temperature probe is not functional, temperature measurements shall be collected using the thermocouple probe and temperature meter. There is no backup method for measuring oxygen level. The following procedure will be used to collect temperature measurements using the thermocouple probe:

1. Connect the probe to the P1 connector on the temperature meter.

2. Press the C key for °C readout. The legend on the LCD display will indicate °C.

3. Press the MODE key for the meter to display the temperature of P1.

4. Press the RESET key to clear the internal memory.

5. Insert the probe to the appropriate depth for each of the six sample locations at each of the four cross-sections for the windrow being measured, as described in Section 2.2 above. Press and hold the MIN/MAX key until the reading stabilizes. The display will alternate between the minimum and maximum reading from the time after the instrument is RESET. The legend on the LCD will indicate MIN and MAX with the readings.

6. Record the date, time, sample identification, and temperature meter MIN/MAX values in the field logbook. Calculate the average temperature meter measurement by adding the MIN and MAX values and dividing by 2.

4.0 MOISTURE LEVEL MONITORING

This section describes the procedure to be followed for collecting moisture level monitoring measurements.

4.1 Tools and Materials

The following tools and materials are required to collect moisture level measurements:

~~hand auger~~
stainless steel push tubes with sleeves or split spoon/ *hand auger*
measuring tape
dedicated 4 ft 7 in.-long measuring stick marked with six-inch intervals
stainless steel bowls (4 per windrow)
stainless steel spoons (4 per windrow)
sealable **disposable** plastic bags
~~microwave oven~~
drying oven
desiccator
furnace
tongs
~~disposable plastic weigh boats~~
weigh boats *(glass)* *(aluminum)*
crucibles
analytical balance *(+/- 0.001)* *(+/- 0.1)*
~~scale~~
squeeze bottle with distilled water
paper towels
sample tags (see approved Pilot Scale QAPP)
sample labels (see approved Pilot Scale QAPP)
tape

transporting device from buildings to the on-site lab
field logbook
indelible pen

4.2 Calibration

The scale shall be calibrated once per week using standard weights in accordance with the manufacturer's Instruction Manual. Calibration shall be documented in the field logbook.

4.3 Sample Collection

Samples for moisture level monitoring will be collected three times per week following oxygen/temperature measurement collection. If water is added to the windrow during turning, moisture level measurements will also be collected no sooner than 1 hour after moisture is added and the windrow is turned. Moisture level samples shall be collected as quickly as possible to minimize moisture loss prior to analysis. Moisture level sub-samples will be collected from locations 1, 2, and 3 at each cross-section, using a ~~hand auger~~ **push tube *or hand auger***. The three sub-samples will then be composited to form one sample for each cross-section. The following procedure shall be used to collect moisture level monitoring samples at each cross-section:

1. Use the measuring tape and measuring stick to locate cross-sections A through D, and sample locations 1, 2, and 3 at each cross-section, as described in Section 2.2 above.

2. Insert the ~~auger~~ **push tube/*hand auger*** into and perpendicular to the pile at each sample location. **Push the tube/*auger* to the designated depth (3 feet for sample location 1, and 2.5 feet for sample locations 2 and 3) or a little deeper to insure a complete sample at that depth.** ~~Remove the material between the surface and the designated depth at each sampling location, placing the removed material on top of the pile and next to the cross-section location, until the auger has reached the designated depth (3 ft for sample location 1, and 2.5 feet for sample locations 2 and 3).~~

3. ~~Fill the auger with the material at the designated sampling depth.~~ Remove the ~~auger from the borehole,~~ **push tube/*auger* and** extract the material from the ~~auger~~ ~~***tube from the***~~ **appropriate depth location (i.e., the bottom portion of the tube/*auger*),** and place into a **designated** stainless steel bowl **with a stainless steel spoon or scoop**. Combine in the bowl the material from sample locations 1, 2, and 3 at a single cross-section.

4. Thoroughly mix the material in the bowl with a stainless steel spoon, then place the composited sample into a ***new disposable*** re-sealable plastic bag **pre-labeled with the windrow number and the cross-section letter. Tape a tag identifying the** ~~labeled with the~~ sample identification number, **date, time, sampler's name, windrow number and cross-section letter, to the bag.**

5. A **new** decontaminated **stainless steel** bowl and **stainless steel** spoon~~, *and new* ***disposable*** *re-sealable plastic bag* ***with labels and tags***,~~ shall be used for each ~~*cross-section*~~ ***windrow.***

6. **Sample tags shall be retained in the field office files as evidence once filed lab measurements are finished.**

4.4 Measurement Procedure

The following procedure will be used to obtain the parameters for calculating moisture levels for each cross-section composite sample. All weights shall be recorded ~~*in*~~ ***on*** the ~~*field logbook*~~ ***Lab Moisture Data Form found in Appendix G.*** Weights shall be reported to the tenth of a gram.

1. For each cross-section sample, weigh and label a ~~plastic~~ weigh boat **or crucible** with the sample identification number. Record this as tare weight, T1.

~~2. Place approximately 25 grams of the cross-section sample into the labeled weigh boat **or crucible**, weigh, and record the sample weight, W1. Reserve the remainder of the sample in the plastic bag for pH measurement, if scheduled for that day.~~

~~3. Remove the sample and weigh boat **or crucible** from the scale. Slowly wet the sample with distilled water from the squeeze bottle until the sample is saturated and water begins to run off into the weigh boat **or crucible**. Carefully pour off the excess water or absorb it with a paper towel without removing any of the solid material.~~

~~4. Re-weigh the sample and weigh boat **or crucible** and record this as the saturated weight, S1.~~

~~5. Place the sample and weigh boat in the microwave oven and heat on "high" for 20 minutes.~~

~~6. After 20 minutes of drying time, remove the sample and weigh boat from the microwave and re-weigh. Record this weight as the dry weight, D1.~~

2. Place a 10-15 gram sample in the tared weigh boat and record the gross wet weight, *as G_1*.

3. Remove the sample and weigh boat or crucible from the scale. Slowly wet the sample with distilled water from the squeeze bottle until the sample is saturated and water begins to run off into the weigh boat or crucible. Carefully pour off the excess water or absorb it with a paper towel without removing any of the solid material.

4. Re-weigh the sample and weigh boat or crucible and record this as the saturated weight, GS.

~~3.~~5. Dry sample in oven at 105 - 110 degrees C for 24 hours or until a constant weight is reached.

~~4.~~6. Place dried sample in dessicator for 20 minutes, *or until cool*, and then record the gross dry weight of the sample plus weigh boat, *as GD_1*.
~~(Weigh weigh boat first, or tare weigh boat prior to adding dreid sample.)~~
Cooling periods for aluminum weigh boats may be very short with small sample sizes. Therfore, use of the desicator may not be required.

5. Collect all used sample material from a single pile **(windrow), after the moisture and pH measurements have been finished,** and place in a **disposable** sealable plastic bag **labeled** for disposal **back** onto that **same** pile **where the sample came from**. Do not mix samples from different piles **(windrows)**.

6.7. Dispose of clean soil bags as solid waste. Dispose of contaminated soil bags as contaminated, according to U.S. Navy EPD procedures.

4.5 Calculations

The following calculation shall be performed:

~~***% Moisture of Original Wet Sample = (#2 - #4) divided by #2 times (100)***~~

PM - Percent Moisture of Original Sample ($[M_{W1} / W_1] \times 100$)

PMS - Percent Moisture at Saturation ($[M_{S1} / S_1] \times 100$)

PS - Percent Saturation (water holding capacity) ($[PM / PMS] \times 100$)

PWHC- Percent of Water Holding Capacity ($[M_{W1} / M_{S1}) \times 100$)

M_W -Mass of Water in Original Sample ($W_1 - D_1$)

M_{S1} - Mass of Water at Saturation ($S_1 - D_1$)

T_1 - Tare Weight of Weigh Boat

G_1 - Gross Weight of Sample and Weigh Boat

W_1 - Net Weight of Sample ($G_1 - T_1$)

GS_1 - Gross Weight of Saturated Sample and Weigh Boat

S_1 - Saturated Weight of Sample (GS_1 - T_1)

GD_1 - Gross Dry Weight

D_1 - Dry Weight of Sample (GD_1 - T_1)

$$PWHC = \frac{(G_1 - GD_1)}{(GS_1 - GD_1)} \qquad PS = \frac{M_{W1} / W_1}{M_{S1} / S_1} \times 100 \qquad PS = \frac{(W_1 - D_1) / (G_1 - T_1)}{(S_1 - D_1) / (GS_1 - T_1)}$$

Calculation sheets shall be maintained in the field laboratory.

~~The following parameters shall be calculated for each cross-section sample using the recorded data:~~

~~Parameter~~	~~Symbol~~	~~Formula~~	~~Result~~
~~Mass of water lost from original compost sample during drying~~	M_{W1}	~~W1 - D1~~	M_{W1} = _____ grams
~~Mass of water added to original compost sample to obtain saturation~~	M_{S1}	~~S1 - W1~~	M_{S1} = _____ grams
~~Percent moisture (original compost sample)~~	PM	~~$\frac{M_{W1}}{(W1-T1)} \times 100$~~	~~PM =~~ _____ %
~~Percent moisture (at saturation)~~	PMS	~~$\frac{(M_{W1} + M_{S1})}{(S1-T1)} \times 100$~~	~~PMS =~~ _____ %
~~Percent saturated~~	PS	~~(PM/PMS) x 100~~	~~PS =~~ _____ %

4.6 DECONTAMINATION

Decontaminate moisture weighing tools upon completion of the moisture weighing event.

5.0 pH MONITORING

This section describes the procedure to be followed for collecting pH measurements.

5.1 Tools and Materials Required

The following tools and materials are required to collect ~~moisture~~ **pH** level measurements:

250 ml glass beaker
100 ml graduated cylinder
stir rod
scale
Hach EC10 portable pH meter
distilled water
field logbook
indelible pen

5.2 Calibration

The pH meter shall be calibrated prior to use in accordance with the manufacturer's Instruction Manual. Calibration shall be documented in the field logbook.

5.3 Sample Collection

pH measurements shall be made on the composite sample material from each cross-section which remains after the moisture level sample portion has been removed from the **disposable** plastic bag. If it is necessary to collect a separate sample for pH monitoring, the sample locations shall be established as described in Section 2.2 above, and sample material shall be collected with a ~~hand auger~~ **push tube/*hand***

auger as described in Section 4.3. **A new sample bag, tag, and label must then be used.**

5.4 Measurement Procedure

The following procedure will be used to measure pH for each cross-section composite sample. All measurements shall be recorded in the field logbook. Weights shall be reported to the tenth of a gram. pH measurements shall be recorded to the tenth of a pH unit.

1. For each cross-section sample weigh and label a 250 ml glass beaker with the sample identification number. ~~*Record this as tare weight, T1.*~~

2. Place approximately 10 grams of the remainder of the cross-section sample into the labeled beaker, ~~*weigh, and record the sample weight, W1*~~.

3. Remove the sample and beaker from the scale. Measure 50 ml distilled water in the graduated cylinder and add the water to the sample in the beaker.

4. Stir the sample material and distilled water in the beaker with the stir rod for 15 seconds. ~~Repeat stirring for 15 seconds every 10 minutes for 30 minutes. This will add up to 4 stirring periods: at time 0, 10 minutes, 20 minutes, and 30 minutes.~~

5. Allow the sample to sit for one hour to allow the solids to settle.

6. Immerse the pH electrode in the liquid portion in the beaker. Do not allow the electrode to rest on the bottom of the beaker, but keep the electrode above the solid layer.

7. Allow the reading on the pH meter to stabilize, then record the pH value in the field logbook.

8. ***Thoroughly rinse the pH probe with distilled water between sample measurements.***

5.5 DECONTAMINATION

Decontaminate the sampling equipment at the end of sampling each windrow. All sampling equipment must be decontaminated or dedicated and disposable for each windrow sampling event Procedures are identified in Field SOP 3.0 of this appendix.

1.0 PURPOSE

This procedure describes the methods which will be used to establish sampling locations and collect compost samples for off-site laboratory analysis. Sampling requirements for on-site monitoring and collection are described in Field SOP 1.0 of this appendix.

2.0 ESTABLISH SAMPLING AND MONITORING LOCATIONS

This section describes the procedure to be followed for establishing the locations for collecting samples for off-site laboratory analyses. Field measurement locations are described in Field SOP 1.0.

2.1 Tools and Materials

The following tools and materials are required to establish sampling locations:

measuring tape (50-foot minimum)
dedicated 4 ft 7 in.-long measuring stick marked with 6-inch intervals
dedicated pin flags or stakes
field logbook
indelible pen

2.2 Establish Sample Locations

Cross-section Locations
Each windrow will be divided into four cross-sections, labeled A through D as shown in Figure 1-1 **and Figure 1-1A,** of this SOP. Cross-section locations will be measured and marked after each time the windrow is turned. The following procedure will be used to establish cross-section locations:

1. Document the windrow size (height, length, and width) in the field logbook or on the Daily Process Data Form, along with the date, time, and windrow number.

~~1.~~ **2.** Locate cross-section A by measuring a distance of 5 feet from the east end of the windrow along the long axis. Place a pin flag or stake on top of the pile at

this location.

~~2.~~ **3.** Locate cross-section D by measuring a distance of 5 feet from the west end of the windrow along the long axis. Place a pin flag or stake on top of the pile at this location.

~~3.~~ **4.** Measure the distance between the marker at cross-section A and the marker at cross-section D. ~~Document the measurement in the field logbook along with date, time, and windrow number.~~ Divide the measured length by three. Take the resulting value and measure that distance (to the nearest 6 inches) from cross-section A towards the center of the pile along the long axis. This is the location of cross-section B. Place a pin flag or stake on top of the pile at this location. Locate cross-section C between cross-sections B and D, an equal distance from both. Place a pin flag or stake on top of the pile at this location.

~~4.~~ **5.** Double check the measurements by making sure the distances between cross-sections A and B, B and C, and C and D are all equal within ± ~~3~~ **6** inches; and cross-sections A and D are each located 5 feet from the ends of the windrow.

Sample locations

~~Six~~ **Three** sample locations will be established at each of the four cross-sections. **The samples will be taken in the following order:**

1. **In-situ reading of Oxygen.**
2. **In-situ reading of Temperature.**
3. **Sample withdrawn for on-site laboratory analysis of moisture and pH.**
4. **Sample withdrawn for off-site laboratory analysis.**

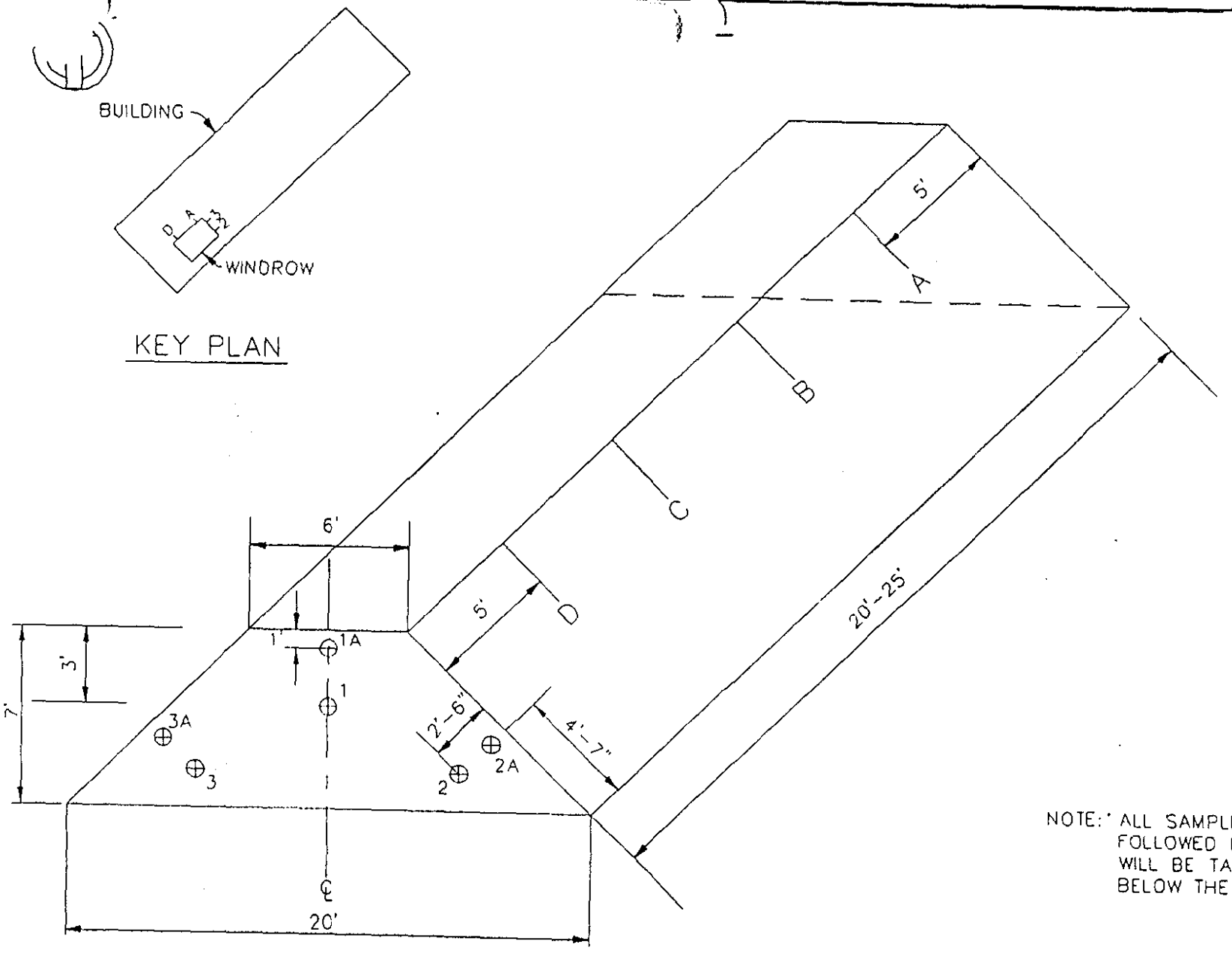

NOTE: ALL SAMPLE NUMBERS FOLLOWED BY AN "A" WILL BE TAKEN AT 1' BELOW THE SURFACE.

PILOT SCALE
WINDROW SAMPLE LOCATIONS

MORRISON KNUDSEN CORP	
Drawing FIGURE 1-1	Rev. 2
Date 4/11/97	Sheet 1

NOTE: ALL SAMPLE NUMBERS FOLLOWED BY AN "A" WILL BE TAKEN AT 1' BELOW THE SURFACE.

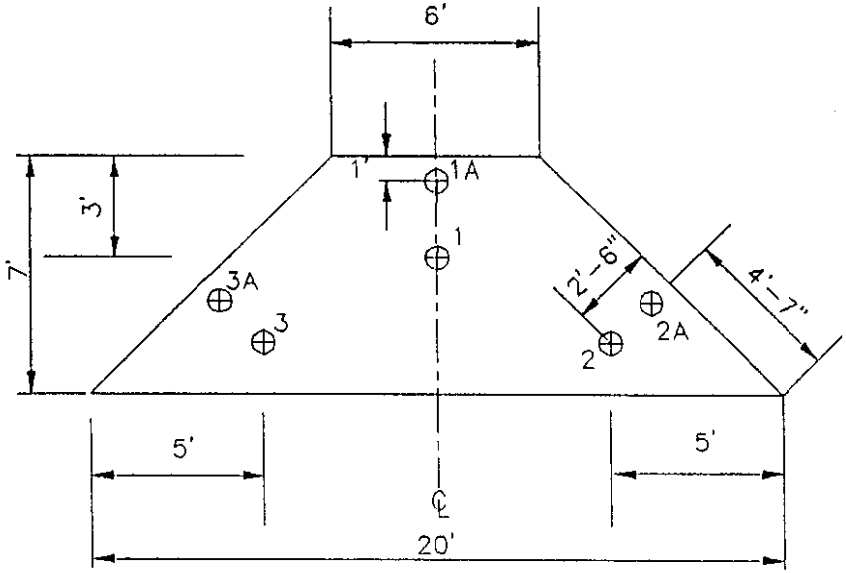

SECTION A–A

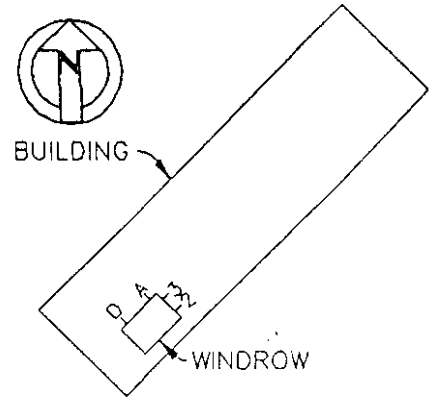

KEY PLAN

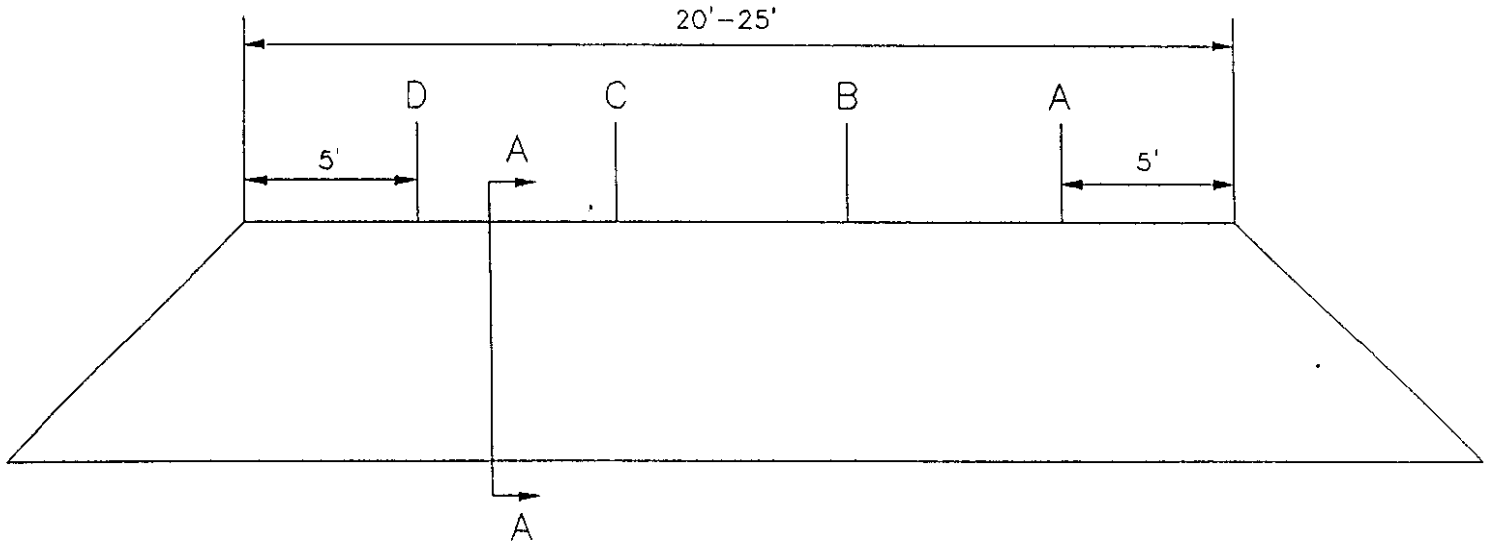

PILOT SCALE
WINDROW SAMPLE LOCATIONS

DRAWING NAME: F:\JOKYSER\CRANE\TWOSY.DWG

MORRISON KNUDSEN CORP.	
Drawing FIGURE 1–1A	Rev. 3
Date 5/16/97	Sheet 1

The following procedure will be used to locate the sample locations:

1. Sample location 1 is located on the longitudinal centerline of the pile at a depth of 3 feet below the top surface. ~~*Hold the marked measuring stick perpendicular to the top of the pile and insert to the 3-foot mark.*~~

2. Sample location 2 is located on the south side of the pile at a depth of 2.5 feet perpendicular to the surface. Lay the 4 ft 7 in. measuring stick on the south side of the pile from the ground surface up, and mark the point on the pile at the end of the stick. ~~*Then hold the measuring stick perpendicular to the side of the pile and insert to the 2.5-foot mark.*~~

3. Sample location 3 is located on the north side of the pile at a depth of 2.5 feet below the surface. Lay the 4 ft 7 in. measuring stick on the north side of the pile from the ground surface up, and mark the point on the pile at the end of the stick. ~~*Then hold the measuring stick perpendicular to the side of the pile and insert to the 2.5-foot mark.*~~

3.0 Sample Collection

This section describes the procedure to be followed for collecting sample material from the compost windrows for off-site laboratory analyses.

3.1 Tools and Materials

~~hand auger~~
stainless steel push tubes with sleeves or split spoon ***and/or hand auger***
measuring tape
dedicated 4 ft 7 in.-long measuring stick marked with six-inch intervals
stainless steel bowls
stainless steel spoons
appropriate sample containers (see Section 4.0 of the approved Pilot Scale QAPP)
field logbook
indelible pen
sample tags
sample labels

tape
coolers
preservatives
chain of custody forms
sealable, disposable **plastic bags** ~~***for placing sample containers in***~~
Wiley Mill
Riffle/splitter

All sample extraction tools which come in contact with the sample shall be decontaminated prior to use as described in Field SOP 3.0.

3.2 Sample Collection Procedure

Samples for off-site laboratory analysis will be discrete as described in Section 4.0 of the approved Pilot Scale QAPP. Discrete samples will be collected from locations 1, 2, and 3 at each cross-section, using a hand auger. Table 1-1 shows the Process Parameter Sampling and Analysis Schedule for the compost material. The following procedure shall be used to collect discrete samples at each cross-section:

1. Use the measuring tape and measuring stick to locate cross-sections A through D, and sample locations 1, 2, and 3 at each cross-section, as described in Section 2.2 above.

2. Insert the ~~auger~~ **push tube/*auger*** into and perpendicular to the pile at each sample location. **Push the tube/*auger* to the designated depth (3 feet for sample location 1, and 2.5 feet for sample locations 2 and 3) or a little deeper to insure a complete sample at that depth.** ~~Remove the material between the surface and the designated depth at each sampling location, placing the removed material on top of the pile and next to the cross-section location, until the auger has reached the designated depth (3 ft for sample location 1, and 2.5 feet for sample locations 2 and 3).~~ ***Remove the material between the surface and the designated depth at each sampling location, placing the removed material on top of the pile and next to the cross-section location, until the auger has reached the designated depth (3 ft for sample location 1, and 2.5 feet for sample locations 2 and 3). Careshall be taken so as not to collapse the hole or have surface material fall in.***

TABLE 1-1
PROCESS PARAMETER SAMPLING AND ANALYSIS SCHEDULE[1]

Matrix	Parameter	Frequency	Req. Volume per sample	Method
1. Windrow compost	Explosives Per Table 8-2 of Pilot Scale Operational Plan	1 sample per locations 1, 2, & 3 per cross-section: Day ~~0, 7, 14, 21, 28~~ **0, 5, 10, 20, 30, 40, 60**	8 ounces	Laboratory (SW846 8330)
2. Windrow compost	TCLP Metals	1 sample per locations 1, 2, & 3 per cross-section: Day ~~0 & 28~~ **0 and 60**	8 ounces	Laboratory (SW 846 6010, 1311, & 7470)
3. Windrow compost	Total metals of barium, cadmium, chromium, & lead	1 sample per locations 1, 2, & 3 per cross-section: Day ~~0 & 28~~ **0 and 60**	8 ounces	Laboratory (SW 846 6010)
4. Windrow compost	TOC	1 sample per locations 1, 2, & 3 per cross-section: Day ~~0, 7, 14, 21, 28~~ **0, 5, 10, 20, 30, 40, 60**	8 ounces (both analyses may be performed using total 8 ounces of soil)	Laboratory (EPA 9060)
5. Windrow compost	TKN	1 sample per locations 1, 2, & 3 per cross-section: Day ~~0, 7, 14, 21, 28~~ **0, 5, 10, 20, 30, 40, 60**		Laboratory (EPA 351.3)

Notes:
1. Complete sampling and analysis procedures and details for the performance parameters are provided in the **approved** Biofacility Pilot Scale QAPP.

3. ~~Fill the auger with the material at the designated sampling depth.~~ ***Fill the auger with the material at the designated sampling depth.*** Remove the ~~auger from the borehole~~ **push tube/*auger*** and extract the material from the ~~auger~~ **tube/*auger* from the appropriate depth location**. Place the extracted material directly into the appropriate sample container **using a stainless steel spoon or scoop**.

5.4. Place ~~*placing*~~ **the remaining sample on top of the pile and next to the cross-section location.**

5. ***Follow the milling and splitting procedures described in Section 4.0 of the approved Pilot Scale QAPP.***

~~4.~~***6.*** ***The samples will be taken to the on-site laboratory for preparation before shipment or field analysis.*** Follow the sample **labeling, tagging,** identification, chain of custody, and shipping and handling procedures described in Section 4.0 of the approved Pilot Scale QAPP. Document all sampling activities in the field logbook.

~~6.~~.***7.*** A decontaminated bowl and spoon, and new sample containers shall be used for each sample location for discrete samples. Decontamination procedures are described in Field SOP 3.0.

4.0 Sample Preparation

To maximize the homogeneity of the samples provided to off-site laboratories, the samples will be processed in a Wiley mill and then passed through a soil sample spillter. The following procedure will be used for homogenizing samples to be split and sent to off-site laboratories for analysis:

1. Spread each sample on a cookie sheet or similar tray.

2. Dry the samples to approximately 10 - 15% moisture content (damp). Drying may be done in an oven at temperatures below 120 degrees F, but air drying is preferred in accordance with EPA Method 8330). If air drying, warming lamps may be used to facilitate drying, but a thermometer should be used to ensure that the temperature doe not exceed 120 degrees F. Occasional stiring will help the samples to dry more quickly.

NOTE: A hazard analysis of the Wiley mill, and the manufacturer's instructions, both indicate that the samples should not be too dry. The concern is due to explosive risk and grinder performance requirements. On the other hand, if the sample is too wet, it will smear and gum up rather than mix properly and thoroughly.

Experience gained during previous testing at UMAD indicates 10 - 15% moisture to be optimum.

3. ***After drying, manually break-up clods and remove pebbles and stones greater than 1/4 inch.***

4. ***Pour the sample into the loading funnel of the mill. Occasionally the mill may clog and the operator must gently push the material using a wooden dowel.***

5. ***After the sample has pased through the mill, collect the material and split the sample using the riffle/splitter, if required. If splitting is not required, collect the sample and pour into the same shipping container.***

~~4.0~~ 5.0 Decontamination Water and Storm Water Retention Pond Sampling

Decontamination water generated from the cleaning of sampling equipment and reusable personal protective equipment (PPE) will be collected and stored in portable temporary storage tanks or 55 gallon drums. Accumulated storm water and surface runoff will be collected in two retention ponds.

~~4.1~~ 5.1 Tools and Materials

disposable Teflon or polyethylene **bottom filling** bailer
appropriate sample containers (see Section 4.0 of the approved Pilot Scale QAPP)
appropriate chain-of-custody, labels, tags, etc. (See approved Pilot Scale QAPP)
sampling scoop or jar on a long stick (type used for surface water sampling)
field logbook
indelible pen

~~4.2~~ 5.2 Sample Collection

Decontamination Water
The following procedure shall be used to collect samples of decontamination water:

1. Slowly lower the disposable Teflon or polyethylene **bottom-filling** bailer beneath the water surface until full.

2. Retrieve the bailer and fill the appropriate sample containers. Vials for volatile organics analysis (VOA) will be filled first. **Avoid creating volatilization of the sample while transferring.** Fill each VOA vile so that a meniscus is formed at the surface, and there are no air bubbles and no free headspace. Then tightly cap and invert each container. Fill the appropriate sample containers for other analyses to be performed, and described in Section 4.0 of the approved Pilot Scale QAPP.

3. Follow the sample **labeling, tagging and** identification, chain of custody, and shipping and handling procedures described in Section 4.0 of the approved Pilot Scale QAPP. Document all sampling activities in the field logbook.

Storm/run-off Water

The same procedure described above for collecting samples from decontamination water will be used to collect samples of storm water and run-off water **in the retention ponds**. If the water level in the retention ponds is too low to sample using a **bottom-filling** bailer, then **a sampling device on a stick or rod** ~~sample containers~~ will be filled ~~directly~~ by submerging in the water. ~~In this case, care shall be taken so that any preservative in the sample containers is not lost.~~ **The sample shall be transferred to the appropriate sampling container. At no time will the sampler enter the retention ponds.**

Alternative Storm/run-off Water Sampling

A NSWC Crane representative may perform the storm/run-off water sampling, in lieu of the above description, based on the IDEM approved NPDES permit requirements.

1.0 PURPOSE

This procedure describes the methods which will be used to decontaminate large equipment, sampling equipment, and personnel.

2.0 SCOPE

This procedure applies to the Naval Surface Warfare Center, Crane, Indiana site for biofacility pilot scale operations.

3.0 PROCEDURE

3.1 Equipment Decontamination At The Bioremediation Facility

Large equipment such as mixers, conveyors, trucks, and equipment used within the Bioremediation Facility to create or turn the windrows will be decontaminated in a designated decontamination facility as described in Section 5.0 of ~~the~~ **this** Operational Plan. Prior to exiting the facility, all loose dirt will be swept or brushed off the exterior of the equipment. The equipment will then be cleaned using a high-pressure, low volume water spray system. This system consists of a hand held wand connected to an overhead high-pressure supply line. All surfaces of the equipment which ~~has~~ **have** come into contact with potentially contaminated material will be cleaned with this system and visually inspected.

The decontamination activity will begin at the highest point of the affected equipment with the decontamination spray being formed in a downward motion. This will allow the upper portions of the equipment to remain clean as the lower portions are being rinsed. Truck beds and loader buckets will be slightly tilted to obtain a sloped surface for an effective washout motion. After cleaning the vehicle or equipment body, the wheel wells, under carriage (if necessary), and tires will be the washed. The equipment will be visually inspected. If evidence of soil remains on the equipment, recleaning will be performed until no visual signs of soil remain. Trucks used for transporting excavated soil are only required to have the truck wheel wells and potentially contaminated exteriors cleaned prior to exiting the Bioremediation Facility and returning for another load

of soil. Complete decontamination of the truck's potentially contaminated surfaces will be performed at the Bioremediation Facility upon completion of excavation and soil transport.

Exceptionally large equipment such as the windrow turner and the center-pivot wheel loader, will be decontaminated in the compost building upon completion of the Pilot Scale Operation. The equipment will be cleaned using the high-pressure portable spray unit described in Section 3.2. The equipment will be cleaned using the same procedure as described above. All decontamination fluids will be collected in the building sump.

3.2 Equipment Decontamination At The Excavation Site

Equipment such as conveyors, backhoe, soil screener, and smaller equipment used within the exclusion zone will be decontaminated in a designated temporary decontamination facility as described in the Soil Excavation Plan found in Appendix E of this Operational Plan. Prior to exiting the EZ, all equipment will pass through the CRZ for decontamination. All loose dirt will be swept or brushed off the exterior and interior of the equipment. The equipment will then be cleaned using a high-pressure, low volume water spray system in the temporary decontamination facility. This system consists of a hand held wand connected to a portable, gas-powered high-pressure pump unit. Trucks used for transporting excavated soil are only required to have the truck wheel wells and potentially contaminated exteriors cleaned prior to exiting the CRZ. Complete decontamination of the truck's potentially contaminated surfaces will be performed at the Bioremediation Facility upon completion of excavation and soil transport.

The decontamination activity will begin at the highest point of the affected equipment with the decontamination spray being formed in a downward motion. This will allow the upper portions of the equipment to remain clean as the lower portions are being rinsed. After cleaning the vehicle or equipment body, the wheel wells, under carriage (if necessary), and tires will be ~~the~~ washed. The equipment will be visually inspected. If evidence of soil remains on the

equipment, recleaning will be performed until no visual signs of soil remain on the equipment exterior.

3.3 Sample Equipment, Compost Sampling Probes, And On-site Laboratory Equipment Decontamination

3.3.1 Sample Equipment and On-site Laboratory Equipment

Disposable Equipment

Dedicated disposal, one-time use, equipment used for sampling water, soil, sediment, air, or compost media shall be segregated and disposed of as solid or special waste according to U.S. Navy EPD procedures. The sampling person must take appropriate measures to prevent any cross-contamination with other equipment or structures.

Non-Disposable Equipment

All non-disposable sampling equipment will be decontaminated according to the following procedure and sequence**, all decontamination equipment will be dedicated and plastic sheeting will be placed under the decontamination area**:

1. Place **the** equipment in a bucket or tub **for brushing and an Alconox water solution rinse**. **First, brush the equipment of as much solids as possible. Then, rinse the equipment using brushes and clean, unused garden sprayers** containing a solution of Alconox and tap water; wash equipment ~~using brushes~~ **thoroughly** being sure to reach both the inside and outside surfaces.

2. Rinse **the** equipment ~~in~~ **over** another bucket or tub ~~with~~ **for a** potable water **rinse**; the rinse can be performed using **clean, unused** garden sprayers, spray bottles, or squeeze bottles.

3. If analysis of the material includes metals, **Day 0 and Day 60 sampling dates**, then rinse **the** equipment with a solution of 10% nitric acid ~~in the same~~ **over a dedicated** bucket or tub ~~that contains the potable water rinse~~; **the equipment should then be rinsed with potable water over the same bucket or tub.** The acid ~~can~~ **will** be contained in **small** spray or squeeze bottles; the nitric acid solution can be obtained from the laboratory. After the acid rinse, proceed to Step 4.

   If analysis of the material does not include metals, proceed to the next step.

4. Rinse **the** equipment with **laboratory** reagent grade water ~~in~~ **over another bucket.** ~~the bucket or tub that contains the potable water/acid;~~ This rinse can be performed using spray or squeeze bottles; the reagent grade water will be supplied by the laboratory.

~~5. If analysis of the material includes organics, then rinse equipment with isopropanol in a third bucket or tub; this rinse can be performed using spray or squeeze bottles; the isopropanol will be supplied by the laboratory; if analysis of the material does not include organics, proceed to the next step~~

~~6. Rinse equipment with reagent grade water in the bucket or tub that contains the isopropanol; this rinse can be performed using spray or squeeze bottles~~

5. **Allow the equipment to air dry *or wipe dry with a clean paper towel* and s**tore **the** equipment in ~~*labeled*~~ plastic bags ***or sheeting*** to prevent contamination after decontaminating.

Cleaning of on-site laboratory non-disposable equipment will be performed as described above except emersion in the decontamination fluids may not be permissible. Spray bottles of cleaning and rinse fluids will be used. **All decontamination liquids shall be managed according to U.S. Navy EPD procedures.**

3.3.2 Compost Sampling Probe Equipment

1. **Brush or wipe (using disposable paper towels) the probe between sampling cross-section locations for a given pile (windrow). Any soils/compost removed shall be placed back onto that pile (windrow).**

2. **Prior to the probe being used on the next compost pile (windrow), the following decontamination procedures must be followed:**

   a. **Remove the Teflon tip from the probe by loosening the screw and sliding out the tip.**

   b. **Using a plastic awl poke out any material clogging the oxygen holes.**

   c. **Wet a paper towel with potable water and wipe the exterior of the probe.**

   d. **Wet a second paper towel with a Alconox soap water solution and wipe the exterior of the probe.**

   e. **Wet a third paper towel with laboratory Reagent grade water and wipe the exterior of the probe.**

   f. **Dry with a fourth dry paper towel any excess water from the probe.**

g. **Replace the probe tip after making sure it has been cleaned also and secure in place with the screw.**

h. **After the last use for the day and the equipment has been decontaminated, store the equipment in labeled plastic bags to prevent contamination after decontaminating.**

3.3.3 Measuring Equipment

All measuring sticks will be dedicated to each individual windrow. The sticks will have any solids brushed off at the end of measurements for that windrow. Any solid residues shall be placed onto that windrow. The measuring sticks shall be stored adjacent to the windrows, next to the containment wall of the building.

The sticks shall be stored in plastic at the end of the Pilot Scale Test for disposal determination by the U.S. Navy EPD Representative.

3.4 Personnel Decontamination At The Bioremediation Facility

The Bioremediation Facility personnel decontamination area consists of a shower/locker room trailer with a change room area, lockers, lavatory, toilets and showers as described in Section 5.0 of this Operational Plan. Persons working within the Bioremediation Facility will operate in ~~*Level C*~~ ***modified Level D*** PPE as described in the SSHP. Boot covers, Tyvek™ suits and disposable gloves will require no decontamination, **and will be disposed of according to U.S. Navy EPD Procedures.**

Respirators will be washed on at least a daily basis. The respirator will be placed in a bucket or tub containing soap and water. The respirator will then be rinsed in a solution of sanitizing agent and water in a separate bucket or tub. The respirator will then be placed in a designated clean area for drying.

3.5 Personnel Decontamination At The Excavation Site

Personnel will be required to pass through a decontamination area before exiting the EZ. The personnel decontamination area will be located in the CRZ adjacent to the EZ. The area will include, as required, a protective clothing removal area and container, respirator removal area and containers, storage for clean personnel protection equipment and clothing, and wash station supplies for hands and face.

All contaminated personal protective equipment and clothing shall be properly disposed of or cleaned and inspected for reuse.

3.6 Decontamination Of The Amendment Storage Area

At completion of the Pilot Scale Operation, the Bioremediation Facility Amendment Storage Area may require cleaning and decontamination to prevent storm water run-off of residual particulate, nitrates, and manures. All excess amendments remaining from Pilot Scale Operations shall be swept and removed from the Bioremediation Facility **according to U.S. Navy EPD requirements**. The amendment Storage Area surfaces will be cleaned of all visible signs of amendment material using the portable gas-powered high-pressure wash unit. Washing will begin with the storage bin walls and proceed from top to bottom. The asphalt surfaces will then be washed commencing with the northern most area working south so as to maintain wash water flow with the asphalt slope contour towards the Storm Water Collection and Retention Pond #2. All wash water and sediment will be collected in the Storm Water Collection and Retention Pond. Once the amendment storage area has been cleaned, the Storm Water Collection and Retention Pond fluid and sediment will be sampled for disposition as described in ~~the~~ **this** Operational Plan.

3.7 Decontamination Of The Compost Buildings And Larger Equipment

At completion of the Pilot Scale Operation, the Bioremediation Facility compost buildings **and larger equipment such as the compost turning machine,** will require cleaning and decontamination to prevent tracking of residual contaminants and amendments outside the area. All excess compost material remaining from Pilot Scale Operations shall be swept and removed from the compost buildings. The building surfaces **and larger equipment** will be cleaned of all visible signs of compost material and dust using the portable gas-powered high-pressure wash unit. The decontamination process **of the buildings** will begin **after the equipment is clean and will start** at the interior roof surface and work downward from the steel members, to the metal siding interior, and down the concrete wall surface. The floor will then be high-pressure washed in the same manner proceeding from the higher elevations sloping to the fluid collection trench and building sump. All decontamination fluids and sediments will be collected in the building sump and sampled for analysis and disposal. Additional wall and floor final rinse samples will be analyzed to evaluate facility cleanliness. Additional cleaning of the buildings will be implemented as required based on rinsate sample results.

3.8 Decontamination Of The Truck Wash Facility

At the completion of the Pilot Scale Operation and once all equipment and vehicles have been decontaminated, the truck wash facility itself will be pressure washed and decontaminated. The decontamination will begin at the interior roof level and work downward from the top of the epoxy coated walls to the floor. The floor will then be high-pressure washed in the same manner proceeding from the higher elevations sloping to the fluid collection trench. All decontamination fluids and sediments will be collected in the truck wash facility sump and sampled for analysis and disposal. Additional cleaning of the wash facility will be implemented as required based on results of the rinsate sample analysis. The same procedure will be followed for the cleaning and sampling of the truck wash sump.

3.9 Decontamination of the Paved Surfaces

At the completion of the Pilot Scale Operation, all pavement shall be pressure rinsed and water shall be directed towards the retention ponds.

1.0 PURPOSE

This procedure describes the methods which will be used to combine and mix amendments in the proper proportions for pilot scale testing.

2.0 SCOPE

This procedure applies to the Naval Surface Warfare Center, Crane, Indiana site for Bioremediation Facility pilot scale operations.

3.0 EQUIPMENT

The following equipment will be used to combine and mix the compost amendments in the prescribed proportions for pilot scale testing:

3.1 Farm Tractor

The Farm Tractor is a John Deer model 7710. The tractor is used to power the grinder/mixer (PTO power) and to transport the grinder/mixer to and from the compost buildings.

3.2 Grinder/Mixer

The grinder/mixer is a Supreme model 700. The grinder/mixer is a 700 cubic foot capacity tub grinder commonly used in agricultural applications to blend and discharge livestock feed into feeding troughs. It has built in scales that provide a digital readout to the nearest ten pounds. It will be used to weigh amendments as they are being added to proportion the blend, and to chop and mix the amendment mixture.

3.3 Center Pivot Wheel Loader

The Center Pivot Wheel Loader is a Caterpillar model 966F. It is equipped with a 6.0 cubic yard bucket. This loader will be used to load amendments into the grinder/mixer.

4.0 SAFETY AND HEALTH PRECAUTIONS AND CONTROLS

1. Use Modified Level D PPE including disposable dust masks when off loading, grinding, and loading amendments.

   Add requirements for hearing protection here based on results of sound level surveys.

2. Maintain clear distance of approximately 15 feet and wear high visibility vest when working ~~around~~ ***in a*** moving machinery ***path***. Stay in equipment operators line-of-sight.

3. Ensure all rotating equipment guards are in place and functional prior to equipment operation.

4. Disengage power to the PTO when removing any remaining material from the grinder/mixer using a broom or brush. At no time should a person reach into the bin or enter the bin of the grinder/mixer unless the unit is disconnected from the PTO drive coupling.

5.0 PROCEDURE

The amendment mixtures will normally be generated within the same work day that the soil addition is performed. However, the amendment mixtures may be generated no more than two days in advance of the soil addition.

Each pilot scale recipe will consist of ***approximately*** 60 cubic yards of material, 45 cubic yards of which will be the amendment blend, the remaining 15 cubic yards will be the 25% soil loading. Figure SOP 4-1, *Pilot Scale Recipe Spreadsheet* lists the quantity in cubic yards of each amendment for each recipe to be tested. The ***approximate*** corresponding weight in pounds is also provided. The amendments for a given recipe will be combined ~~in~~ **for each of the** three 15 cubic yard batches (this will allow room for blending and fluffing). ***Four or more batches may be required when mixing high volumes of alfalfa or straw. Experience has shown that aproximately 8 cubic yards of baled alfalfa or straw is the maximum mixable volume for one batch.*** Figure SOP 4-2, *Pilot Scale Batch Spreadsheet* provides the amendment quantities for each of the three 15 cubic yard batches.

5.1 Zero Balance the Scales

The scales of the grinder/mixer must be zero balanced prior to each use. This is accomplished as follows:

1. Remove any remaining material from the grinder/mixer using a broom or brush.

2. Press the [ON] key on the scale display.

3. Press the [NET/GROSS] key and within three seconds,

4. Press the [ZERO] key.

5. "ZERO" will be displayed to indicate zero balancing is complete.

5.2 Loading Amendments

The lighter amendments should generally be loaded first (e.g., straw, hay, sawdust and wood chips). The manures and vegetable waste should be loaded last to provide improved mixing. After zero balancing the scales, as described above, the amendments shall be loaded into the grinder/mixer as follows:

1. Select the proper recipe mixture from Figure SOP 4-2, *Pilot Scale Batch Spreadsheet*. Record the Recipe #, Date, and Design Quantities on the *Record of Recipe* form, ~~provided in Appendix~~ **as in Appendix G of this Pilot Scale Operational Plan.**

2. Load the first amendment via the center pivot loader from the amendment storage bin and gradually dump into the grinder/mixer until the desired ~~*weight is registered on the scales*~~ ***volume is added.*** Record the ***volume and*** actual weight on the *Record of Recipe* for that mix batch.

3. Press the [TARE] key on the scale display to establish a temporary zero point.

4. Press the [NET/GROSS] key to select NET mode.

5. Load the second amendment in a similar fashion until the scales register the desired ~~*weight*~~ ***volume*** of that amendment ***has been added***. Record the actual ***volume and*** weight on the *Record of Recipe* **form** for that mix batch.

6. Repeat steps 2, 3 and 4 for each additional amendment to be added.

5.3 Blending of Amendments

Once all amendments for that batch have been loaded into the grinder/mixer, the mixer will be activated to chop and blend the amendment mixture. Chopping and blending will continue as the grinder/mixer is pulled to the composting building by the farm tractor. Each load shall be blended for a minimum of ten minutes. The blended amendment batch will be unloaded as described in SOP 5.0.

NSWC CRANE

PILOT SCALE MIX RECIPIES

MIX #1

Ingredient	Qty. (CY)	Qty. (lbs.)	% Carbon	% D.M.	Carbon (lbs.)	% Nitrogen	Nitrogen (lbs.)	C:N Ratio	Cost ($/Ton)
Straw		0	0.4240	0.88	0.00	0.0123	0.00	34.47	$65
Chicken Manure		0	0.1870	0.88	0.00	0.0558	0.00	3.35	$25
Alfalfa	15	2,025	0.3290	0.85	566.29	0.0314	54.05	10.48	$165
Cow Manure		0	0.3820	0.21	0.00	0.0257	0.00	14.86	$22
POTW Waste	15	25,275	0.0006	0.25	3.49	0.0005	3.22	1.08	$1
Saw Dust	7.5	3,075	0.6000	0.61	1,125.45	0.0008	1.50	750.00	$20
Wood Chips	7.5	3,975	0.6000	0.88	2,098.80	0.0008	2.80	750.00	$20
Totals	45	34,350							
	Mix Density (lbs/CY) =	763			3,794.03		61.57	61.62	
	Mix Unit Cost ($/CY) =	$5.56							

MIX #2

Ingredient	Qty. (CY)	Qty. (lbs.)	% Carbon	% D.M.	Carbon (lbs.)	% Nitrogen	Nitrogen (lbs.)	C:N Ratio	Cost ($/Ton)
Straw		0	0.4240	0.88	0.00	0.0123	0.00	34.47	$65
Chicken Manure	21	30,450	0.1870	0.88	5,010.85	0.0558	1,495.22	3.35	$25
Alfalfa		0	0.3290	0.85	0.00	0.0314	0.00	10.48	$165
Cow Manure		0	0.3820	0.21	0.00	0.0257	0.00	14.86	$22
Vegetable Waste		0	0.4000	0.30	0.00	0.0140	0.00	28.57	$95
Saw Dust		0	0.6000	0.61	0.00	0.0008	0.00	750.00	$20
Wood Chips	24	12,720	0.6000	0.88	6,716.16	0.0008	8.95	750.00	$20
Totals	45	43,170							
	Mix Density (lbs/CY) =	959			11,727.01		1,504.17	7.80	
	Mix Unit Cost ($/CY) =	$11.29							

MIX #3

Ingredient	Qty. (CY)	Qty. (lbs.)	% Carbon	% D.M.	Carbon (lbs.)	% Nitrogen	Nitrogen (lbs.)	C:N Ratio	Cost ($/Ton)
Straw		0	0.4240	0.88	0.00	0.0123	0.00	34.47	$65
Chicken Manure		0	0.1870	0.88	0.00	0.0558	0.00	3.35	$25
Alfalfa	15	2,025	0.3290	0.85	566.29	0.0314	54.05	10.48	$165
Cow Manure		0	0.3820	0.21	0.00	0.0257	0.00	14.86	$22
Turkey Manure	15	11,745	0.4160	0.74	3,615.58	0.0260	225.97	16.00	$25
Vegetable Waste		0	0.4000	0.30	0.00	0.0140	0.00	28.57	$95
Saw Dust		0	0.6000	0.61	0.00	0.0008	0.00	750.00	$20
Wood Chips	15	7,950	0.6000	0.88	4,197.60	0.0008	5.60	750.00	$20
Totals	45	21,720							
	Mix Density (lbs/CY) =	483			8,379.47		285.62	29.34	
	Mix Unit Cost ($/CY) =	$8.74							

MIX #4

Ingredient	Qty. (CY)	Qty. (lbs.)	% Carbon	% D.M.	Carbon (lbs.)	% Nitrogen	Nitrogen (lbs.)	C:N Ratio	Cost ($/Ton)
Straw		0	0.4240	0.88	0.00	0.0123	0.00	34.47	$65
Chicken Manure	1.95	2,828	0.1870	0.88	465.29	0.0558	138.84	3.35	$25
Alfalfa	11.55	1,559	0.3290	0.85	436.04	0.0314	41.62	10.48	$165
Cow Manure	13.5	19,238	0.3820	0.21	1,543.23	0.0257	103.82	14.86	$22
Vegetable Waste	6.45	9,675	0.4000	0.30	1,161.00	0.0140	40.64	28.57	$95
Saw Dust	11.55	4,736	0.6000	0.61	1,733.19	0.0008	2.31	750.00	$20
Wood Chips		0	0.6000	0.88	0.00	0.0008	0.00	750.00	$20
Totals	45	38,035							
	Mix Density (lbs/CY) =	845			5,338.76		327.23	16.32	
	Mix Unit Cost ($/CY) =	$19.61							

MIX #5

Ingredient	Qty. (CY)	Qty. (lbs.)	% Carbon	% D.M.	Carbon (lbs.)	% Nitrogen	Nitrogen (lbs.)	C:N Ratio	Cost ($/Ton)
Straw		0	0.4240	0.88	0.00	0.0123	0.00	34.47	$65
Chicken Manure		0	0.1870	0.88	0.00	0.0558	0.00	3.35	$25
Alfalfa	11.55	1,559	0.3290	0.85	436.04	0.0314	41.62	10.48	$165
Cow Manure		0	0.3820	0.21	0.00	0.0257	0.00	14.86	$22
Turkey Manure	15.45	12,097	0.4160	0.74	3,724.05	0.0260	232.75	16.00	$25
Vegetable Waste	6.45	9,675	0.4000	0.30	1,161.00	0.0140	40.64	28.57	$95
Saw Dust	11.55	4,736	0.6000	0.61	1,733.19	0.0008	2.31	750.00	$20
Wood Chips		0	0.6000	0.88	0.00	0.0008	0.00	750.00	$20
Totals	45	28,067							
	Mix Density (lbs/CY) =	624			7,054.29		317.32	22.23	
	Mix Unit Cost ($/CY) =	$17.48							

NSWC CRANE

PILOT SCALE MIX RECIPIES

MIX #6

Ingredient	Qty. (CY)	Qty. (lbs.)	% Carbon	% D.M.	Carbon (lbs.)	% Nitrogen	Nitrogen (lbs.)	C:N Ratio	Cost ($/Ton)
Straw		0	0.4240	0.88	0.00	0.0123	0.00	34.47	$65
Chicken Manure		0	0.1870	0.88	0.00	0.0558	0.00	3.35	$25
Alfalfa	9	1,215	0.3290	0.85	339.77	0.0314	32.43	10.48	$165
Cow Manure		0	0.3820	0.21	0.00	0.0257	0.00	14.86	$22
Turkey Manure	15	11,745	0.4160	0.74	3,615.58	0.0260	225.97	16.00	$25
Vegetable Waste	9	13,500	0.4000	0.30	1,620.00	0.0140	56.70	28.57	$95
Saw Dust	6	2,460	0.6000	0.61	900.36	0.0008	1.20	750.00	$20
Wood Chips	6	3,180	0.6000	0.88	1,679.04	0.0008	2.24	750.00	$20
Totals	45	32,100							
	Mix Density (lbs/CY) =	713			8,154.76		318.54	25.60	
	Mix Unit Cost ($/CY) =	$20.99							

MIX #7a

Ingredient	Qty. (CY)	Qty. (lbs.)	% Carbon	% D.M.	Carbon (lbs.)	% Nitrogen	Nitrogen (lbs.)	C:N Ratio	Cost ($/Ton)
Straw	42.9	3,475	0.4240	0.88	1,296.55	0.0123	37.61	34.47	$65
Chicken Manure	2.1	3,045	0.1870	0.88	501.09	0.0558	149.52	3.35	$25
Alfalfa		0	0.3290	0.85	0.00	0.0314	0.00	10.48	$165
Cow Manure		0	0.3820	0.21	0.00	0.0257	0.00	14.86	$22
Vegetable Waste		0	0.4000	0.30	0.00	0.0140	0.00	28.57	$95
Saw Dust		0	0.6000	0.61	0.00	0.0008	0.00	750.00	$20
Wood Chips		0	0.6000	0.88	0.00	0.0008	0.00	750.00	$20
Totals	45	6,520							
	Mix Density (lbs/CY) =	145			1,797.64		187.13	9.61	
	Mix Unit Cost ($/CY) =	$3.36							

MIX #7b

Ingredient	Qty. (CY)	Qty. (lbs.)	% Carbon	% D.M.	Carbon (lbs.)	% Nitrogen	Nitrogen (lbs.)	C:N Ratio	Cost ($/Ton)
Straw	36	2,916	0.4240	0.88	1,088.02	0.0123	31.56	34.47	$65
Chicken Manure	9	13,050	0.1870	0.88	2,147.51	0.0558	640.81	3.35	$25
Alfalfa		0	0.3290	0.85	0.00	0.0314	0.00	10.48	$165
Cow Manure		0	0.3820	0.21	0.00	0.0257	0.00	14.86	$22
Vegetable Waste		0	0.4000	0.30	0.00	0.0140	0.00	28.57	$95
Saw Dust		0	0.6000	0.61	0.00	0.0008	0.00	750.00	$20
Wood Chips		0	0.6000	0.88	0.00	0.0008	0.00	750.00	$20
Totals	45	15,966							
	Mix Density (lbs/CY) =	355			3,235.53		672.37	4.81	
	Mix Unit Cost ($/CY) =	$5.73							

MIX #7c

Ingredient	Qty. (CY)	Qty. (lbs.)	% Carbon	% D.M.	Carbon (lbs.)	% Nitrogen	Nitrogen (lbs.)	C:N Ratio	Cost ($/Ton)
Straw	33	2,673	0.4240	0.88	997.35	0.0123	28.93	34.47	$65
Chicken Manure	6	8,700	0.1870	0.88	1,431.67	0.0558	427.20	3.35	$25
Alfalfa		0	0.3290	0.85	0.00	0.0314	0.00	10.48	$165
Cow Manure		0	0.3820	0.21	0.00	0.0257	0.00	14.86	$22
Vegetable Waste	6	9,000	0.4000	0.30	1,080.00	0.0140	37.80	28.57	$95
Saw Dust		0	0.6000	0.61	0.00	0.0008	0.00	750.00	$20
Wood Chips		0	0.6000	0.88	0.00	0.0008	0.00	750.00	$20
Totals	45	20,373							
	Mix Density (lbs/CY) =	453			3,509.02		493.94	7.10	
	Mix Unit Cost ($/CY) =	$13.85							

1.0 PURPOSE

This procedure describes the methods which will be used to load amendment blends into windrow configurations for pilot scale testing.

2.0 SCOPE

This procedure applies to the Naval Surface Warfare Center, Crane, Indiana site for Bioremediation Facility pilot scale operations.

3.0 EQUIPMENT

The following equipment will be used to transport amendment blends to the composting buildings and load the blends into a windrow configuration for pilot scale testing:

3.1 Farm Tractor

The Farm Tractor is a John Deere model 7710. The tractor is used to power the grinder/mixer (PTO power) and to transport the grinder/mixer to and from the compost buildings.

3.2 Grinder/Mixer

The grinder/mixer is a Supreme model 700. The grinder/mixer is a 700 cubic foot capacity tub grinder commonly used in agricultural applications to blend and discharge livestock feed into feeding troughs. It has built in scales that provide a digital readout to the nearest ten pounds. It will be used to weigh amendments as they are being added to proportion the blend, and to chop and mix the amendment mixture.

3.3 Windrow Turner

The windrow turner is a Scarab model 20HYD450. This is a specialized piece of equipment designed to turn, mix and aerate a 20 foot wide windrow with a

maximum height of 7 feet.

4.0 SAFETY AND HEALTH PRECAUTIONS AND CONTROLS

1. Use Modified Level D PPE including disposable dust masks when off loading, grinding, and loading amendments.

   ~~*Add requirements for*~~ ***H***earing protection ***is required within 15 feet of operating equipment.*** ~~*here based on results of sound level surveys.*~~

2. Maintain clear distance of approximately 15 feet and wear high visibility vest when working ***within*** moving machinery ***path***. Stay in equipment operators line-of-sight.

3. Ensure all rotating equipment guards are in place and functional prior to equipment operation.

4. ~~*Disengage*~~ ***Lock out and tag out*** power to the PTO when removing any remaining material from the grinder/mixer using a broom or brush. At no time should a person reach into the bin or enter the bin of the grinder/mixer unless the unit is ~~*disconnected*~~ ***locked out and tagged out*** from the PTO drive coupling.

5. All personnel shall maintain minimum 30 feet clearance from the front or rear of the windrow turner during turning of the windrows.

5.0 PROCEDURE

Each pilot scale recipe will consist of 60 cubic yards of material, 45 cubic yards of which will be the amendment blend, the remaining 15 cubic yards will be the 25% soil loading. The amendments for a given recipe will be combined in three ***or more*** ~~*15 cubic yard*~~ batches as described in SOP 4.0.

5.1 Building Windrow

The amendment portion of the windrows will be constructed as follows:

1. Transport the first batch of amendment blend from amendment storage area to the composting building via the tractor pulled grinder/mixer.

2. Position the grinder/mixer in the building and begin discharging the amendment blend through the side mounted discharge conveyor to form the outer-most windrow first as shown on drawing P-100 found in Appendix C **of this Pilot Scale Operational Plan.**

3. Continue discharging and begin traveling forward as the pile builds to a height of six feet to maintain a long row of this height.

4. Once the first batch is unloaded, return to the amendment storage area for the second batch.

5. Discharge the second batch, starting where the first left off, until about 2/3 of the batch has been placed yielding a windrow about 20 to 25 feet long.

6. Move the grinder/mixer adjacent to the start of the first windrow and begin discharging the balance of the second batch into another six feet high pile such that it overlaps the first by about three feet, yielding a combined width of 18 to 20 feet.

7. Once the second batch is unloaded, return to the amendment storage area for the third batch.

8. Discharge the third batch, starting where the second left off, finishing the second overlapping pile.

9. Remove any remaining material from the grinder/mixer using a broom or brush.

10. Repeat steps 1 through 9 for remaining recipes.

5.2 Shaping Amendment Portion of Windrow

Once amendments for all recipes within the building have been loaded into the two overlapping piles, the windrows will be shaped by the windrow turner. This will be accomplished by turning the amendments with the discharge flap on the back of the windrow turner adjusted to produce a windrow 4 feet 5 inches tall. The resulting windrow will be 20 feet wide at the base. Any miscellaneous amendment material disbursed during windrow formation will be collected and returned to its originating pile. The collection and floor cleaning will be performed using the ~~steer skid~~ ***skid steer*** loader as well as manual shovels and brooms.

1.0 PURPOSE

This procedure describes the methods which will be used to transport soil to the composting facility and load the soil into windrows for pilot scale testing.

2.0 SCOPE

This procedure applies to the Naval Surface Warfare Center, Crane, Indiana site for Bioremediation Facility pilot scale operations.

3.0 EQUIPMENT

The following equipment will be used to transport soil to the composting buildings and convey the soil to windrows for pilot scale testing:

3.1 Semi-Tractor and Live-Bottom Trailer

The semi-tractor is a Mack model 169CH613. The live-bottom trailer is a Red River model HS 236 102. The trailer is 43 feet long and has a minimum capacity of 48 cubic yards. It has a conveyor floor which is capable of discharging material out the rear of the trailer. The tractor-trailer rig will be used to transport soil to the composting facility.

3.2 Dump Conveyor

The dump conveyor is a specially designed piece of equipment that will be used to convey soil from the live-bottom trailer to the windrows. The unit attaches to the rear of the trailer via two swivel hooks and latches. The conveyor is self powered by a diesel engine mounted on the unit. Soil from the live-bottom trailer is discharged into a hopper on the dump conveyor and is then conveyed to the center of the windrow off the right side of the unit.

4.0 SAFETY AND HEALTH PRECAUTIONS AND CONTROLS

1. **Follow explosives handling procedures as required by U.S. Navy.**

2. Use ~~Level C~~ ***modified Level D*** PPE when off-loading contaminated soils into windrows and Modified Level D for set-up and preparation tasks associated with off-loading.

   ~~Add requirements for~~ ***H***earing protection ~~here~~ ***may be required*** based on results of sound level surveys.

3. Maintain clear distance of approximately 15 feet and wear high visibility vest when working around moving machinery. Stay in equipment operators line-of-sight.

4. Ensure all rotating equipment guards are in place and functional prior to equipment operation.

5.0 PROCEDURE

During clean soil pilot testing, soil will be excavated from the borrow pit ~~located south of the composting facility~~ and screened; during contaminated soil pilot testing, soil will be excavated from Mine Fill A near building #153 and screened. Excavation and screening of soil from Mine Fill A is described in Appendix ~~F~~ ***E*** of this Pilot Scale Operational Plan.

5.1 Transporting Soil

Screened, clean soil will be transported from the borrow pit to the composting facility using the tractor and live-bottom trailer. Screened, contaminated soil will be transported from Mine Fill A using the semi-tractor and live-bottom trailer. Soil at NSWC Crane averages 1.1 tons per cubic yard. 15 cubic yards of soil are required for each pilot scale recipe. This 15 cubic yards equates to 16.5 tons of soil per recipe. ~~Each trailer load of soil will be weighed at the truck scales and adjusted if necessary to 16.5 tons (soil weight).~~ The empty weight of the tractor-trailer rig is 16.3 tons. Loaded with ***16.5*** ~~19.5~~ tons of soil, the total load of 32.8 tons will not exceed the 36 ton capacity of bridges on the NSWC Crane base. Figure 6-2 in Section 6.0 of this Pilot Scale Operational Plan illustrates the travel path from Mine Fill A to the composting facility. Prior to leaving the composting facility for another load of soil, the exterior of the tractor-trailer rig

will be decontaminated at the equipment decontamination facility located at the composting facility exit as discussed in SOP 3.0. This decontamination activity will be performed during the clean soil test as a practice even though the equipment will not be contaminated at that time.

Screened soil may be transported and stockpiled in one of the buildings at the Bioremediation Facility, if necessary. Stockpiled soil will be covered to prevent dust from emminating.

5.2 Loading Soil into Windrows

The general sequence of activities for loading soil into the windrows is as follows:

1. The semi-tractor trailer rig loaded with soil arrives at the composting facility and the ***volume and*** weight of soil is recorded on the *Record of Recipe* form **(Field SOP 4.0, ~~*Figure SOP 4-3 in Appendix G*~~),** for the recipe to be generated. At this time, the *Record of Recipe* form has already been partially completed during the amendment proportioning and mixing procedure, **Field** SOP 4.0, for this specific recipe.

2. The dump conveyor is connected to the rear of the trailer via two swivel hooks and latches.

3. The semi-tractor trailer enters the compost building pulling the dump conveyor.

4. Once positioned to the left of the first amendment pile, the engine of the dump conveyor will be started.

5. Next the bottom flap at the rear of the trailer will be opened ***to a minimum of*** ~~approximately~~ six inches.

6. Then the trailer and dump conveyors will be activated. Soil will begin discharging into the dump conveyor and onto the amendment windrow. Care should be taken not to transfer excess soil onto the dump conveyor

and causing a dump conveyor overload. The speed of the dump conveyor should always be slightly faster than the trailer discharge conveyor.

7. As the soil begins to pile up about two feet above the top of the amendments, the tractor-trailer will be driven forward at a slow rate of speed such that a uniform two feet high pile of soil is maintained until the trailer is emptied. See Figure 6-3 in Section 6.0 of this Pilot Scale Operational Plan.

8. If the trailer is emptied prior to reaching the end of the windrow, the soil will be adjusted ~~*with the skid steer loader*~~ to uniformly distribute it along the full length of the windrow.

9. If the conveyor reaches the end of the windrow prior to being emptied, the trailer will be backed up and the balance of soil will be distributed along the windrow.

10. The height of soil as it is discharged will be adjusted as necessary on subsequent windrows such that the trailer is emptied at the same time as it reaches the end of the windrow.

11. Once the trailer is emptied, the conveyor will be disconnected and the tractor-trailer will proceed to the vehicle decontamination facility.

12. The exterior of the tractor-trailer will be decontaminated ***prior to exiting the facility***.

13. The tractor-trailer will return to the excavation site ***or stockpile area*** for another load of soil.

14. This process will be repeated until all windrows have been loaded with soil.

Drawings P-102 and P-103 in Appendix C of this Pilot Scale Operational Plan provide the travel path for loading soil into the windrows.

1.0 PURPOSE

This procedure describes the operations related to using the soil screener at the excavation site.

2.0 SCOPE

This procedure applies to the Naval Surface Warfare Center, Crane, Indiana site for Bioremediation Facility pilot scale operations.

3.0 EQUIPMENT

The following equipment will be used to screen the excavated soil for removal of large particles not suitable for composting at the Bioremediation Facility:

3.1 Soil Screener

The soil screener is a Knight Manufacturing Corporation model 005580 ProScreen Trommel Screen. The screener is used to filter out the large particles over 1.5 inches in diameter that are not suitable for composting. It is equipped with a conveyor for fines stacking or loading.

3.2 Backhoe

The backhoe is a CAT 416 B that is used to load excavated soil into the screener. The backhoe is also used to remove large particles rejected from the screener that will not be used in the composting process.

3.3 Semi-Tractor and Live-Bottom Trailer

The semi-tractor is a Mack model 169CH613. The live-bottom trailer is a Red River model HS 236 102. The trailer is 43 feet long and has a minimum capacity of 48 cubic yards. It has a conveyor floor which is capable of discharging material out the rear of the trailer. The tractor-trailer rig is used to transport screened soil from the excavation site to the composting facility.

3.4 Stacking Conveyor

The stacking conveyor is a trough belt conveyor which is used to convey the screened material from the discharge of the screener to the live-bottom trailer.

3.5 Center Pivot Loader

The rubber tired loader is a Catepillar 966F and is used for moving larger quantities of material, particulary when loading trucks.

4.0 SAFETY AND HEALTH PRECAUTIONS AND CONTROLS

1. **Follow explosives Handling Procedures as required by U.S. Navy.**

2. Use ~~Level C~~ ***modified Level D*** PPE per the Site Safety and Health Plan (SSHP). Personnel shall avoid direct contact with contaminated soil as much as possible.

   ~~Add requirements for~~ ***H***earing protection here ***is required within 15 feet of operating equipment.*** ~~based on results of sound level surveys.~~

3. Maintain clear distance of approximately 15 feet and wear high visibility vest when working ~~around~~ ***within*** moving machinery ***path***. Stay in equipment operators line-of-sight. Ensure back-up alarms are operational on equipment.

4. Ensure all rotating and conveyer equipment guards are in place and functional prior to equipment operation.

5. Ensure Screener is operated on level ground and is properly locked and stabilized in position.

6. Know location of emergency stop switch on Screener control panel.

7. Shut-down Screener and remove key prior to refueling and servicing.

8. Ensure trailer brakes are locked on Semi-Tractor and Live-Bottom Trailer prior to loading.

5.0 PROCEDURE

5.1 Placement

Placement of the screener unit will be per the Excavation Plan.

5.2 Screener Start-up

5.2.1 Starting Engine

1. Check all fluid levels before starting engine.

2. Turn all switches to off and make sure emergency stop switches are deactivated (out position).

3. Pull out the throttle enough for 1000 RPM.

4. Push and hold override button. If the red light turns on, an automatic shutdown or emergency stop switch is engaged and will not allow the engine to start. Check all gauges and switches and correct the shutdown condition. Turn the ignition switch until the engine starts. Immediately release the key, but hold the override button for approximately 5 seconds or until oil pressure is maintained.

5. Check all engine gauges and allow engine to warm up before increasing throttle to operating speed.

5.2.2 Positioning The Conveyor

After the engine has warmed up, the fines conveyor can be moved into position.

1. Remove the transport lock.

2. Make sure the area under the conveyor is clear of obstructions or bystanders.

3. Lower and extend the conveyor using the fine conveyor cylinder switch on the control panel.

4. Insert locking pins in side frame.

~~5. *Adjust support chains as necessary to level the outboard pulley to the screen frame.*~~

5.2.3 Starting The Components

1. Increase engine speed to 1800-2000 RPM.

2. With the fines conveyor speed adjustment at 0, start the fines conveyor and increase to desired speed. Check the belt tracking and alignment and adjust if necessary.

3. With the drum speed adjustment at 0, start the drum and increase to desired speed.

4. With the feed conveyor adjustment at 0, start the feed conveyor and increase to desired speed. Check the belt tracking and alignment and adjust as necessary.

5.3 Loading Screener

Excavated soil will be loaded directly in the screener hopper with the backhoe for processing.

1. Begin feeding carefully to be sure that the screen speeds are suitable.

2. The loader operator must use good judgement when loading the screen. Any objects which could severely damage the screen must be separated before loading into the hopper.

3. Generally, load material into the front end of the hopper.

4. Operate the prescreen whenever necessary to remove large material from the top. Make sure no one is standing in the dump area before operating the prescreen.

5.4 Product Handling to Truck

Screened material will be conveyed from the screener unit directly into the tractor trailer bed via the stacking conveyor ***and/or by the center pivot loader***.

5.5 Rejected Material

Rejected material from the screening process will be discharged into a **lined** pile. The material will be segregated into separate **lined** piles based on material type, i.e., wood waste, rocks, and other.

1.0 PURPOSE

This procedure describes the methods which will be used to turn pilot scale windrows and add water to adjust moisture content.

2.0 SCOPE

This procedure applies to the Naval Surface Warfare Center, Crane, Indiana site for Bioremediation Facility pilot scale operations.

3.0 EQUIPMENT

The following equipment will be used to turn pilot scale windrows and add water to adjust moisture content of the compost windrows:

3.1 Windrow Turner

The Windrow Turner is a Scarab model 20HYD450. This is a specialized piece of equipment designed to turn, mix and aerate a twenty-foot wide windrow with a maximum height of seven feet. It is equipped with a ~~200~~ ***600*** gallon tank and spray nozzles to add moisture to windrows during the turning process.

3.2 Mobile Water Tank

The Mobile Water Tank is a ~~1,000~~ ***1,100*** gallon capacity, trailer mounted poly tank. It is equipped with a five horse power gasoline powered discharge pump with a two-inch discharge. It can be pulled by a farm tractor, one-ton pick-up truck or other comparable equipment.

3.3 Portable Transfer Pump

The Portable Transfer Pump is a five horse power gasoline powered pump with a two-inch semi-rigid suction pipe and a two-inch flexible discharge hose.

4.0 SAFETY AND HEALTH PRECAUTIONS AND CONTROLS

1. **Follow explosives handling procedures as required by the U.S. Navy.**

2. Use ~~Level C~~ ***modified Level D*** PPE per the Site Safety and Health Plan (SSHP). Personnel shall avoid direct contact with contaminated soil as much as possible.

   Add requirements for hearing protection here based on results of sound level surveys.

3. Maintain clear distance of approximately 15 feet and wear high visibility vest when working around moving machinery. Stay in equipment operators line-of-sight. Ensure back-up alarms are operational on equipment.

4. Ensure all rotating equipment guards are in place and functional prior to equipment operation.

5. All personnel shall maintain minimum 30 feet clearance from in the front or rear of the windrow turner during turning of the windrows.

6. Operate Windrow Turner with cab door closed and latched in position. ~~Adjust ventilation system in cab for comfort~~.

7. Use lockout controls on Windrow Turner when cleaning the flaps and drum during windrow turning activities.

5.0 PROCEDURE

Windrows will typically be turned once daily during pilot scale operation. Turning frequency may be adjusted at the direction of MK Engineering, with concurrence of the U.S. Navy. Additionally, windrows will be turned after water addition. The operating goal for compost moisture content is 40 to 60% of the Maximum Water Holding Capacity (MWHC) of the compost. Too little moisture

will inhibit microbial movement and nutrient availability, however too much moisture will fill the void spaces needed for proper aeration which is essential for aerobic microbial growth.

5.1 Windrow Turning

Each pilot scale windrow will be turned daily after pre-turning monitoring of the windrows is complete. The following steps will be followed during the turning process:

1. Position the windrow machine at the windrow to be turned.

2. Engage the drum on the windrow machine and begin turning the windrow.

3. Upon reaching the end of the windrow, stop the windrow machine and disengage the drum.

4. Lockout the windrow machine; the driver will exit the cab, lock the door and wait on the windrow machine platform until given clearance by the person cleaning the underside of the machine.

5. Clean caked material from the drum and flaps of the windrow machine.

6. Cleanup material which has been thrown beyond the ends of the windrow and place in back onto the windrow using a skid steer loader or similar piece of equipment.

7. Repeat steps 1 through 6 for the remaining windrows to be turned.

5.2 Moisture Addition

Water will be added to the windrows to adjust moisture content when the actual moisture level falls below 40% of the MWHC (Reference Field SOP 1.0 for determination of actual moisture and MWHC). Water will be added using the spray nozzles on the windrow machine during the turning

process, ***using a hose with a flow meter and spray nozzle connected to the buildings potable water source, or using a hose and spray nozzle connected to the trailer mounted calibrated tank and pump.***. No more than ~~100~~ ***300*** gallons, ***during hot weather, and 250 gallons during average/cool weather,*** will be added to a single windrow prior to taking additional moisture readings. Water will be added as follows:

Using the Windrow Turner

1. ***The 600 gallon*** Poly tank on the windrow machine ~~will be marked at the half-full level.~~ ***Is marked in 50 gallon increments.***

2. Start with water level ~~either full or at the half full mark~~ ***at a predetermined level (suggested at 300 gallons).***

3. Engage spray nozzles at the start of windrow turning.

4. Each pass with the windrow machine will add approximately 30 to ~~40~~ ***50*** gallons of water.

5. Monitor level of water in tank to assure no more than ~~half a tank (100 gallons)~~ ***the desired amount*** is added to the windrow.

6. Two or three passes may be required to add the desired amount of moisture.

~~7. After water addition, the tank will be refilled to the starting level with a metered water supply to determine actual amount added.~~

8.***7.*** Record amount of water added on the Windrow Process Data - Daily Log found in Appendix D of ~~the~~ ***this*** Pilot Scale Operation Plan.

Using the Trailer Mounted 1,100 gallon Tank and Pump

1. The 1,100 gallon trailer mounted poly tank is marked in 100 gallon increments.

2. *Start with a water level at a predetermined level.*

3. *Add water to the windrows using the hose and spray nozzle attached to the trailer mounted pump. Spray the windrow with an even light spray.*

4. *Monitor the level of water in the tank to assure no more than the desired amount is added to the windrow.*

5. *If large quantities of water are required (200 gallons or more) one-half of the water may be applied before the first windrow turning pass and the one-half after. The windrow will be turned after each water application.*

6. *Record the amount of water added on the Windrow Process Data Daily Log.*

Using the Building Potable Water Source

1. *Add water to the windrow using the hose and spray nozzle connected to the building potable water source. An in-line flow meter will be used to monitor the volume of water added.*

2. *Spray the windrow with an even light shower distributing the water the entire length of the windrow on all sides.*

3. *Monitor the flow meter to assure no more than the desired amount is added to the windrow.*

4. *Record the amount of water added on the Windrow Process Data Daily Log.*

1.0 PURPOSE

This procedure describes the material and methods in detail which will be used for time integrated industrial hygiene air sampling of bioaerosols, explosive residues, metals and organic compounds.

2.0 SCOPE

This procedure applies to the Naval Surface Warfare Center, Crane, Indiana site for Bioremediation Facility pilot scale operations. This procedure only includes time integrated air sampling as described in Section 7.3 of the Task-Specific Site Safety and Health Plan (SSHP) document (SSHP, 1997). A subcontract is in place with Lyle Environmental Management, Inc to provide required equipment rentals and analytical services. Refer to RFQ 4324-060 under purchase order 2F6-4324-2783. The Cleveland Senior Safety Supervisor will direct and perform all air sampling and coordinate his efforts with the MK field SSHO.

3.0 MATERIAL

The following material (equipment) will be used for air sampling.

3.1 Bioaerosols

Included will be a high volume sampling pump with 2-Stage Andersen Impactor calibrated using 4 liter (L) glass calibration jar with calibration specific petri dishes. All sampling and calibration equipment will be supplied by laboratory on a rental agreement. Seventy percent ethanol will be supplied by the laboratory. Miscellaneous consumables such as disposable gloves, freezer bags, spray bottle, and pans will be purchased prior to start-up by the Cleveland Senior Safety Supervisor in coordination with the MK field SSHO.

Samples will be collected by impaction on pre-selected growth media plates using a high volume sampling pump with 2-Stage Andersen Impactor. The growth media will be Standard Method Agar (SMA) for bacteria and Potato Dextrose Agar (PDA) for fungi (molds and yeast). The Andersen Two Stage uses plastic petri dishes containing 20 mil-liter (mL) of the appropriate growth media prepared by the analytical laboratory and shipped to the field.

Both the SMA and PDA are supplied to the analytical laboratory by Becton Dickinson and Company. The approximate formula for SMA per L purified water is: 5.0 gram (g) pancreatic digest of casein; 2.5 g yeast extract; 1.0 g dextrose; and 15.0 g agar. The approximate formula for PDA per L purified water is: 4.0 g potato, infusion from (solids); 20.0 g dextrose; and 15.0 g agar.

The calibration specific petri dishes are extra sampling petri dishes filled with either SMA or PDA. They were used only for determining the pre- and post-sampling flow rates of the sampling pump.

3.2 Explosive Residues

Included will be Gillian multi-flow sampling pumps, Gillabrator calibrator, and tygon tubing. An OSHA Versatile Sampler (OVS) Tube Holder from SKC Corporation will be used to hold the OVS Tube in place and fastened to the worker. Refer to SKC 1997 Comprehensive Catalog and Air Sampling Guide on page 34 (SKC, 1997) for this holder.

Samples will be collected on sorbent and filter tube, 270/140 XAD-2 and glass fiber filter, OVS Tube. OSHA Method 44 (OSHA, 1983) recommends collection of 2,4-DNT and 2,4,6-TNT on modified Tenax-GC Tubes (100 milligram (mg) /50 mg sections). The modification includes placing an 8 millimeter (mm) glass fiber filter inside of the tube ahead of the first resin bed. OSHA's Chemical Sampling Information (CSI, 1996) database available through the OSHA Computerized Information System (OCIS) recommends 37 mm glass fiber filter for collection of RDX and HMX.

By design, the OSHA OVS tube satisfies requirements for both an adsorbent bed and a filter media. The analytical laboratory recommended using the XAD-2 tube instead of Tenax, and stated the XAD-2 tube will provide equivalent if not better collection efficiency than Tenax and costs less per OVS tube. This was also confirmed by an SKC Corporation representative by telephone. The Tenax tubes are mainly designed where thermal desorption techniques are used in the analysis of the sample media. A description of the XAD-2 tube is provided in the SKC 1997 Comprehensive Catalog and Air Sampling Guide on page 29 (SKC, 1997).

3.3 Metals

Included will be Gillian multi-flow sampling pumps, Gillabrator calibrator, and tygon tubing. A Filter Cassette Holder will be used to hold the 0.8 micrometer (µm) cellulose ester membrane (MCE) filter with support pad and 3-piece 37 mm clear styrene acrylonitrile (SAN) cassette in place and fastened to the worker. Refer to SKC 1997 Comprehensive Catalog and Air Sampling Guide (SKC, 1997) part number 225-1 for this holder.

3.4 Organic Compounds

Included will be Gillian multi-flow sampling pumps, Gillabrator calibrator, and tygon tubing. Tube Holders will be used to hold the 100 mg/50 mg coconut shell charcoal tubes in place and fastened to a step ladder inside of the composting structure. Refer to SKC 1997 Comprehensive Catalog and Air Sampling Guide (SKC, 1997) part number 222-3-1 for this holder.

4.0 METHODS

The following methods will be used for air sampling.

4.1 Bioaerosols

During active composting, six area samples will be obtained inside of the composting structure and six area samples outside of the structure approximately 100 m downwind from the composting structure. The samples will be obtained approximately two and three days into the composting process. Samples inside of the structure will be taken immediately after the windrows are turned. One sample set consists of the following:

1. Bacteria - 1 respirable and 1 nonrespirable culture plate
2. Fungi - 1 respirable and 1 nonrespirable culture plate

Therefore six sample sets inside of the structure for bacteria will require 12 culture plates and six sample sets for Fungi inside of the structure will require 12 culture plates for a total of 24 culture plates. Three of the respirable sized bacteria plates and three of the non respirable sized bacteria plates will be subcultured using velveteen impression at the laboratory for *E.coli* analysis.

The outside samples will total 24 the same as the inside samples. Velveteen impression will be obtained for the same amount of samples as the inside samples, 6 samples. An estimated 4 field culture blanks will be obtained in the field.

4.1.1 Procedure

Bioaerosol samples will be collected in accordance with the guidance presented in the American Industrial Hygiene Association (AIHA), Field Guide for the Determination of Biological Contaminants in Environmental Samples (AIHA, 1996).

The airflow for the sampling unit will be adjusted to 28.3 L/min and verified using a factory calibrated electronic bubble-tube calibrator with a capacity to 30 L/min. Prior to calibration, the temperature, pressure, and relative humidity will be recorded on a calibration log sheet. During calibration, designated calibration only plastic petri dishes will be inserted into the impactor stages. The impactor stages will be placed in a 4 L calibration jar as described in Bisesi and Kohn, (1995). The pre-sampling flowrate (Q_{pre}) will be determined using the electronic bubble-tube calibrator based on the average result of three measurement trials and recorded on the calibration log sheet.

Prior to sampling, each plate will be labeled to specify stage, location, and sampling time. After calibration, the impactor stages will be disassembled and sprayed and swabbed with seventy percent ethanol/water and air dried on disposable pans. Disposable latex gloves will be worn when disinfecting and handling the impactor and sample plates.

After air drying, the impactor stages will be loaded with sample petri dishes. The petri dish samples ***lids*** will be placed concave surface down on disposable pans pre-wiped with seventy percent ethanol/water.

At the sampling site, the sampling pump will be turned "ON" and start time recorded. After a specified time, the pump will be turned "OFF" and stop time recorded. Sampling time will be ten minutes. Ten minutes was selected as the sampling time based on Figure 21-5 from Nevalainen et at. (1993). This figure shows at an assumed concentration of bioaerosols particles in air of $10^3/m^3$, the recommended Andersen two-stage sampling time is 17.7 minutes. Based on

data reviewed from IH sampling at other types of composting facilities, concentrations of bioaerosols in air could be approximately 10^3/ m^3 or higher. If levels are higher, ten minutes should provide enough of a factor to prevent overloading the sample media, leading to counting errors and inhibition effects.

After completing sampling, the unit will be disassembled and the covers of the petri dish installed. The plates will be placed in a cooler filled with blue ice right-side-up. The blue ice will maintain storage temperatures of about 4 °C during shipment to the laboratory. One set of negative controls (field blanks) for every ten collected samples will be prepared. A set of negative controls will be prepared by loading the sampling instrument with filled plates, followed by removal of the plates without activating the sampling pump. Shipment and storage of negative control plates coincides with the environmental samples.

In addition to the field blanks, two travel control blanks will be sent by the analytical laboratory with the shipment of petri dishes. The travel control blanks are not opened in the field and are returned to the laboratory with the field samples for analysis to determine if contamination could have occurred. A Chain-of-Custody form will be completed and attached to the cooler. As part of the analytical laboratory quality control program, one laboratory trip blank and one laboratory field blank will also be analyzed.

The calibration only plastic petri dishes were again inserted into the impactor stages and post-sampling calibration flow rate (Q_{post}) data will be obtained and the data recorded on the calibration log sheet. Q_{post} will be checked to make sure its value is within 10% of Q_{pre}. The average flow rate (Q_{avg}) will be calculated based on the average of the pre- and post- sampling flow rates and recorded on the calibration log sheet. Q_{avg} becomes the actual flow rate in the field (Q_{act}) and is corrected in the field to standard flow rate (Q_{std}), where standard temperature and pressure equal 25° C (298 Kelvin (K)) and 760 mm Hg (Pressure (P), respectively. Q_{std} is calculated from the following equation and the value recorded on the calibration log sheet:

$$Q_{std} = Q_{act} \times (298/T) \times (P/760)$$

4.1.2 Sample Analysis

A separate growth media as described in the Material section for both respirable

and non-respirable fractions will be used for each of the following constituents and analyzed accordingly:

1. Total bacteria (total plate count), subculture from bacteria plate for *E.coli* as a marker from manure.

2. Fungi (molds and yeast), look especially for the fungus *Aspergillus fumigatus.*

At the laboratory, as soon as possible and before 24 hr, the sample plates will be placed right-side-up for fungi and upside down for bacteria in an incubator set at an appropriate temperature for incubation. For bacteria, the incubation temperature will be 35 ± 1 °C for 48 hours ± 2 hr. For fungi (molds and yeast), the incubation temperature will be 35 ± 1 °C for 120 hours. After incubation of the bacteria plates, a velveteen impression will be obtained and pressed onto either McConkey or EMB growth media for *E.coli* subculturing and subsequent analysis.

Analysis for bacteria (total plate count) will be completed by laboratory using a Quebec colony counter, dark-field, with suitable light source and grid plate in accordance with Food and Drug Administration (FDA) Bacteriological Analytical Manual. Analysis for *E.coli* will be completed by laboratory using the MICRO-ID system (MICRO-ID, 1989). The MICRO-ID system contains filter-paper disks impregnated with reagents which detect the presence of specific enzymes and/or metabolic produced by certain microorganisms. These reagents include a substrate to be acted upon by a bacterial enzyme and a detection system which reacts with the metabolic end-product to yield identifiable color change. Precise quantities of substrate and/or detection reagents are applied to each disk. Following interpretation of results, identification of *E.coli* can be made by visual identification or through the MICRO-ID Identification Manual.

Analysis for fungi (molds and yeast) will be completed by laboratory using a Quebec colony counter, dark-field, with suitable light source and grid plate in accordance with Lyle Laboratories SOP for Yeast and Mold Count, Document Number 369-72 (SOP, 1996) based on procedures for determining plate count developed by the Association of Official Analytical Chemists (AOAC), and by the American Public Health Association (APHA).

The concentration of microorganisms will be determined based on the number of colonies counted divided by the volume of air sampled. The concentration is expressed in units of colony forming units per cubic meter of air (cfu/m^3) as calculated in the following equation:

$$\text{Bioaerosol concentration (cfu/m}^3\text{)} = \frac{\text{Number of colonies counted}}{\text{Vol. of air sampled in m}^3}$$

4.1.3 Data Analysis

The laboratory will report quantitative laboratory analysis for each sample in raw data (as total count) and cfu/m^3. The laboratory will report qualitative laboratory analysis results for each sample by identifying the type of microorganism found.

4.2 Explosives Residues

During soil excavation and screening at the Mine Field A facility, six personal samples of full shift duration, or if necessary, split shift duration will be obtained from ~~two of the laborers. The laborer's are considered~~ the maximally exposed individual. ~~for this task.~~

At the composting facility, six personal samples of full shift duration, or split shift if necessary, will be obtained from the ~~Environmental Technician. The Environmental Technician is considered the~~ maximally exposed individual during the composting process. ~~since he will be responsible for supervising the building of the windrows, applying water during mixing and refining of the windrows, and for monitoring process parameters.~~

~~The construction superintendent may also be in the building during windrow building assisting the Environmental Technician. If this is the case, personal samples of full shift or split shift will be obtained.~~

Four to six area samples inside of the composting structure during active composting will be obtained as a basis for design and verification of breathing zone sampling strategies (Rock, 1995). The area samples will be of full shift duration, obtained inside of the compost building near the compost piles, but far enough so as not be hit by the windrow turner machine and any of the compost thrown from its mixing flails. The sample pump and media will be secured to a

~~*portable step ladder*~~ at approximately 1.5 m above the floor. Area samples should be biased by representing the worst-case exposure. ~~since no one will be in the structure during turning of the windrows once "active" composting begins except for the windrow machine operator. The windrow machine operator will be working from an enclosed cab with inlet air filtration. One or two personals samples may be obtained from the windrow machine operator, however, the time to complete two to three passes through the compost piles is minimal. Thus sufficient sampling time may not be obtainable.~~

The personal samples will be compliance samples. (Rock, 1995) reports that for compliance sampling, one or more samples determine whether the exposure samples is in or out of compliance. (Rock, 1995) also reports that this technique does not predict overall conditions in the workplace; it is valid only for estimating the meaning of the exposure(s) observed at the time and place of the compliance sampling campaign, as specified in the regulation. (Rock, 1995) states at least six samples are required for a valid estimate of the confidence interval around the mean and more than eleven are required to estimate the variance.

4.2.1 Procedure

To obtain a full shift sample of eight hours (hr) of 120 L air volume, the flow rate of the pump will be adjusted to 0.5 L/min and verified using a factory calibrated electronic bubble-tube calibrator with a capacity to 4 L/min. If split shift samples of four hour duration are obtained, the pump will be adjusted to 1.0 L/min. Prior to calibration, the temperature, pressure, and relative humidity will be recorded on a calibration log sheet at the sampling site. Both ends of a labeled OVS tube will be broken open and inserted into the OVS tube holder. The sampling train will be assembled. It will consist of high-flow pump with tygon tubing connected to a tube holder. After assembly, the sampling pump with sampling train attached, with the addition of a moisture trap will be checked for calibration to 0.5 L/min.

The pre-sampling flowrate (Q_{pre}) will be determined using the electronic bubble-tube calibrator based on the average result of three measurement trials and recorded on the calibration log sheet.

The OVS tube holder containing a labeled sampling tube will be positioned

vertically and attached to the worker within the breathing zone, and the air sampling pump will be secured to the belt of the worker for personal sampling. The sampling train will be positioned and secured to a step ladder approximately 1.5 m above the floor for area sampling.

At the sampling site, the sampling pump will be turned "ON" and start time recorded. After a specified time, the pump will be turned "OFF" and stop time recorded. After sampling, the sampling train will be removed from the worker and the post-sampling calibration flow rate (Q_{post}) data obtained and the data recorded on the calibration log sheet. Q_{post} will be checked to make sure its value is within 10% of Q_{pre}. The average flow rate (Q_{avg}) will be calculated based on the average of the pre- and post- sampling flow rates and recorded on the calibration log sheet. Q_{avg} becomes the actual flow rate in the field (Q_{act}) and is corrected in the field to standard flow rate (Q_{std}), where standard temperature and pressure equal 25° C (298 Kelvin (K)) and 760 mm Hg (Pressure (P), respectively. Q_{std} is calculated from the following equation and the value recorded on the calibration log sheet:

$$Q_{std} = Q_{act} \times (298/T) \times (P/760)$$

The OVS tube will be removed from the holder and the sample media label checked and the OVS tube end caps will be custody sealed, wrapped in protective covering, and placed in a cooler filled with blue ice right-side-up. The blue ice will maintain storage temperatures of about 4 °C during shipment to the laboratory. A Chain-of-Custody form will be completed and attached to the cooler.

One set of negative controls (field blanks) for every ten collected samples will be prepared. A set of negative controls will be prepared by assembling the sampling train with an opened OVS tube inserted into the tube holder, followed by removal of the OVS tube without activating the sampling pump.

4.2.2 Sample Analysis

At the laboratory, the samples will be analyzed per USEPA Method 8330 (USEPA SW846, 1994) using a Hewlet Packard 1040A UV-VIS Diode Array High Pressure Liquid Chromatography (HPLC) detector system providing a scan for specific analytes and isomers including HMX, RDX, TNT, 1,3-DNB, TNB, and

2,4-DNT. The analysis will be completed in accordance with Lyle Environmental Management, Inc., Standard Operating Procedure (SOP) CH-17 (SOP, 1995). Samples will be extracted with acetonitrile and analyzed by HPLC. The area of the peaks of the unknown sample will be compared to standard injections. Desorption efficiency (DE), expressed in percent, will be calculated by the analytical laboratory and factored in to determine the mass of analyte on the OVS Tube sections. The concentration (C), of analyte in the air volume sampled (V) in L will be calculated from the following equation:

$$C\ (mg/m^3) = \frac{[W_f\ (mg) + W_b\ (mg) - B_{fb}\ (mg)] \times 10^3}{V\ (L)}$$

where:

C = concentration of analyte in air, in mg/m^3
W_f = mass of analyte found in the sample front, in mg
W_b = mass of analyte found in the sample back (if any), in mg
B_{fd} = mass of analyte found in the blank front minus the blank back, in mg
V = volume of air sampled, in L

During sample analysis, if $W_b > W_f/10$, the analytical laboratory will report breakthrough and possible sample loss. The OSHA Method 44 uses gas chromatography with thermal energy analyzer and explosives analysis package (GC/TEA/EAP), but lists HPLC as one of several very adequate analytical techniques for DNT and TNT. The OSHA OCIS CSI (CSI, 1996) lists HPLC-UV for RDX and HMX analysis. By using EPA Method 8330, an analysis of the key analytes can be conducted from a single media using one method.

4.2.3 Data Analysis

The laboratory will report analysis results in mg/m^3 for each detected constituent.

4.3 Metals

During soil excavation and screening at the Mine Fill A facility, obtain two personal samples of full shift duration, or if necessary, split shift duration from two of the laborers. ~~During composting, obtain two personal samples of full shift duration, or if necessary, split shift duration from the windrow turning machine operator during the first or second week into the composting process during turning of the windrow. During composting, obtain two area samples from inside~~

~~the composting facility of full shift duration.~~ Estimate ~~8~~ **4** samples for analysis (~~6~~ **2** samples plus 2 blanks).

4.3.1 Procedure

To obtain a full shift sample of eight hours (hr) of 720 L air volume, the flow rate of the pump will be adjusted to 1.5 L/min and verified using a factory calibrated electronic bubble-tube calibrator with a capacity to 4 L/min. If split shift samples of four hour duration are obtained, the pump will be adjusted to 3.0 L/min. Prior to calibration, the temperature, pressure, and relative humidity will be recorded on a calibration log sheet at the sampling site. Both end caps of a labeled filter cassette will be removed and inserted into the filter cassette holder. The sampling train will be assembled. It will consist of high-flow pump with tygon tubing connected to a tube holder. After assembly, the sampling pump with sampling train attached, with the addition of a moisture trap will be checked for calibration to 1.5 L/min or 3.0 L/min depending on the sample duration.

The pre-sampling flowrate (Q_{pre}) will be determined using the electronic bubble-tube calibrator based on the average result of three measurement trials and recorded on the calibration log sheet.

The filter cassette holder containing a labeled filter cassette will be positioned vertically and attached to the worker within the breathing zone, and the air sampling pump will be secured to the belt of the worker for personal sampling. ~~The sampling train will be positioned and secured to a step ladder approximately 1.5 m above the floor for area sampling.~~

At the sampling site, the sampling pump will be turned "ON" and start time recorded. After a specified time, the pump will be turned "OFF" and stop time recorded. After sampling, the sampling train will be removed from the worker and the post-sampling calibration flow rate (Q_{post}) data obtained and the data recorded on the calibration log sheet. Q_{post} will be checked to make sure its value is within 10% of Q_{pre}. The average flow rate (Q_{avg}) will be calculated based on the average of the pre- and post- sampling flow rates and recorded on the calibration log sheet. Q_{avg} becomes the actual flow rate in the field (Q_{act}) and is corrected in the field to standard flow rate (Q_{std}), where standard temperature and pressure equal 25° C (298 Kelvin (K)) and 760 mm Hg (Pressure (P), respectively. Q_{std} is calculated from the following equation and the value

recorded on the calibration log sheet:

$$Q_{std} = Q_{act} \times (298/T) \times (P/760)$$

The filter cassette holder will be removed from the holder and the sample media label checked and the cassette end caps will be custody sealed, wrapped in protective covering, and placed in a cooler filled with blue ice right-side-up. The blue ice will maintain storage temperatures of about 4 °C during shipment to the laboratory. A Chain-of-Custody form will be completed and attached to the cooler.

One set of negative controls (field blanks) for every ten collected samples will be prepared. A set of negative controls will be prepared by assembling the sampling train with an opened cassette inserted into the filter cassette holder, followed by removal of the cassette without activating the sampling pump.

4.3.2 Sample Analysis

At the laboratory, the samples will be analyzed per NIOSH Method 7300 for metals scan using a Graphite Furnace Atomic Absorption (GFAA) Spectroscopy. Analytes include aluminum, cadmium, iron, nickel, antimony, chromium, lead, arsenic, cobalt, zinc, beryllium, copper, and magnesium. The analysis will be completed in accordance with Lyle Environmental Management, Inc., Standard Operating Procedure (SOP) (SOP, 1991).

The concentration (C), of analyte in the air volume sampled (V) in L will be calculated from the following equation:

$$C\ (mg/m^3) = \frac{[Ws\ (mg) - W_b\ (mg)] \times 10^3}{V\ (L)}$$

where:

C = concentration of analyte in air, in mg/m^3
W_f = mass of analyte on the sampled filter, in mg
W_b = mass of analyte found on the blank filter (if any), in mg
V = volume of air sampled, in L

4.3.3 Data Analysis

The laboratory will report analysis results in mg/m^3 for each detected constituent.

4.4 Organic Compounds

Time-integrated area air sampling for hydrocarbons using personal air sampling pumps will be performed by the MK SSHO during the composting process to determine what, if any, of the hydrocarbon constituents may be present and their levels. Sample collection and analysis will be completed in accordance with the following methods: (1) NIOSH 1500 for hydrocarbons, (2) NIOSH 1501 for aromatic hydrocarbons, and (3) NIOSH 1003 for halogenated hydrocarbons.

During the composting process, obtain two area samples of full shift duration **inside** of the structure and two **outside** of the structure (representing background) for each of the three methods ~~*approximately one week into the composting process*~~. Area samples inside of the composting structure during active composting will be obtained as a basis for design and verification of breathing zone sampling strategies if determined to be necessary. The area samples will be of full shift duration, obtained inside of the compost building near the compost piles, but far enough so as not be hit by the windrow turner machine and any of the compost thrown from its mixing flails. The sample pump and media will be ~~*secured to the portable step ladder*~~ at approximately 1.5 meter (m) above the floor. For each method, estimate 4 samples for analysis (12 samples plus 3 blanks) for a total of 15 samples.

4.4.1 Procedure

To obtain a full shift sample of eight hours (hr), the flow rate of the pump will be adjusted to required flowrate listed below and verified using a factory calibrated electronic bubble-tube calibrator with a capacity to 4 L/min.

a. NIOSH 1500 - volume of 4 L, flowrate of $\leq$ 0.20 L/min based on n-hexane.

b. NIOSH 1501 - volume of 30 L, flowrate of $\leq$ 0.20 L/min based on benzene.

c. NIOSH 1003 - volume of 60-70 L, flowrate approximately 0.14 L/min.

Prior to calibration, the temperature, pressure, and relative humidity will be recorded on a calibration log sheet at the sampling site. Both end caps of a labeled solid sorbent tube will be removed using a tube breaker/capper and inserted into the tube holder. The sampling train will be assembled. It will consist of high-flow pump with tygon tubing connected to a tube holder. After assembly, the sampling pump with sampling train attached, with the addition of a moisture trap will be checked for the desired calibration.

The pre-sampling flowrate (Q_{pre}) will be determined using the electronic bubble-tube calibrator based on the average result of three measurement trials and recorded on the calibration log sheet.

The tube holder containing a labeled sorbent tube will be positioned vertically ~~*and attached to a step ladder*~~ approximately 1.5 m above the floor for area sampling.

At the sampling site, the sampling pump will be turned "ON" and start time recorded. After a specified time, the pump will be turned "OFF" and stop time recorded. After sampling, the sampling train will be removed from the worker and the post-sampling calibration flow rate (Q_{post}) data obtained and the data recorded on the calibration log sheet. Q_{post} will be checked to make sure its value is within 10% of Q_{pre}. The average flow rate (Q_{avg}) will be calculated based on the average of the pre- and post- sampling flow rates and recorded on the calibration log sheet. Q_{avg} becomes the actual flow rate in the field (Q_{act}) and is corrected in the field to standard flow rate (Q_{std}), where standard temperature and pressure equal 25° C (298 Kelvin (K)) and 760 mm Hg (Pressure (P), respectively. Q_{std} is calculated from the following equation and the value recorded on the calibration log sheet:

$$Q_{std} = Q_{act} \times (298/T) \times (P/760)$$

The sorbent tube will be removed from the holder, the label checked and the end caps placed in position and custody sealed, wrapped in protective covering, and placed in a cooler filled with blue ice right-side-up. The blue ice will maintain storage temperatures of about 4 °C during shipment to the laboratory. A Chain-

of-Custody form will be completed and attached to the cooler.

One set of negative controls (field blanks) for every ten collected samples will be prepared. A set of negative controls will be prepared by assembling the sampling train with an opened sorbent tube inserted into the tube holder, followed by removal of the sorbent tube without activating the sampling pump.

4.4.2 Sample Analysis

At the laboratory, the samples will be analyzed per NIOSH Method 1500, 1501 and 1003 using a Gas Chromatography Flame Ionization Detector (GC/FID). If necessary, additional analysis will be completed using a Mass Spectrometry (MS). The analysis will be completed in accordance with Lyle Environmental Management, Inc., Standard Operating Procedure (SOP) titled Organic Compounds on Charcoal Tubes (SOP, 1993).

The concentration (C), of analyte in the air volume sampled (V) in L will be calculated from the following equation:

$$C\ (mg/m^3) = \frac{[W_f\ (mg) + W_b\ (mg) - B_{fb}\ (mg)] \times 10^3}{V\ (L)}$$

where:

C = concentration of analyte in air, in mg/m^3
W_f = mass of analyte found in the sample front, in mg
W_b = mass of analyte found in the sample back (if any), in mg
B_{fd} = mass of analyte found in the blank front minus the blank back, in mg
V = volume of air sampled, in L

During sample analysis, if $W_b > W_f/10$, the analytical laboratory will report breakthrough and possible sample loss.

4.4.3 Data Analysis

The laboratory will report analysis results in mg/m^3 for each detected constituent.

5.0 COMPLETION REPORT

The Cleveland Senior Safety Supervisor is responsible for preparing a summary report

on results of all time-integrated industrial hygiene sampling results and recommended follow-on sampling requirements. Refer to the SSHP document section 13.5. This summary report shall be integrated into the pilot scale project completion report.

6.0 REFERENCES

American Industrial Hygiene Association (AIHA) 1996 Andersen multi-hole impactor samplers. In: Dillion, H.K.; Heinsohn, P.A.; and Miller, J.D., eds., Field Guide for the Determination of Biological Contaminants in Environmental Samples: Section 4. Viable air sampling instruments: description and operating procedures. AIHA, Fairfax, Virginia, pp. 82-85.

Bisesi, M.S. and Kohn, J.P. 19[illegible] Industrial Hygiene Evaluation Methods. Lewis Publishers (CRC Press, Inc.), Boca Raton, FL., pp 15-1-15-5.

MICRO-ID. 1989 Microbiological identification system users manual. Durham, NC., Organon Teknika Corporation.

Nevalainen, A.; Willeke, K.; Liebhaber, F.; Pastuszka, J.; Burge, H.; and Henningson, E. 1993 Bioaerosol sampling. In: Willeke, K., and Baron, P.A., eds., Aerosol Measurement: Principles, Techniques and Applications. New York, Van Nostrand Reinhold, pp. 471-474.

Occupational Safety and Health Administration (OSHA) 1983 Method number 44 for 2,4-Dinitrotoluene (DNT) and 2,4,6-Trinitrotoluene. In: OSHA Computerized Information System (OCIS), Analytical Methods, http:// 198.17.175.40/ SLTC/ methods.html

OSHA Chemical Sampling Information (CSI) 1996 Chemical sampling information for Cyclonite, HMX, and 2,4,6-Trinitrotoluene. In: OSHA Computerized Information System (OCIS), Chemical Sampling Information, http:// 198.17.175.40/ OCIS/ toc.chemsamp.html

Rock, J.C. 1995 Occupational air sampling strategies. In: Cohen, B.S. and Hering, S.V., eds., Air Sampling Instruments for evaluation of atmospheric contaminants. Cincinnati, Ohio, American Conference of Governmental Industrial Hygienists (ACGIH), pp. 21-29.

Site Safety and Health Plan (SSHP) 1997 Task-specific site safety and health plan, pilot scale, soils bioremediation facility. North Charleston, South Carolina, Morrison Knudsen Corporation.

Standard Operating Procedure (SOP) CH-17. 1995 Explosive residue analysis on OVS-2 (XAD-2) adsorption tubes. Lyle Environmental Management, Inc.

Standard Operating Procedure (SOP). 1996 Yeast and mold count. Lyle Environmental Management, Inc., Document Number #369-72.

Standard Operating Procedure (SOP). 1993 Organic compounds on charcoal tubes. Lyle Environmental Management, Inc.

Standard Operating Procedure (SOP). 1991 Metals in air. Lyle Environmental Management, Inc.

SKC Inc. 1997 Comprehensive catalog and air sampling guide. Eighty Four, PA., SKC Inc., p. 29.

USEPA SW846. 1994 Test methods for the evaluation of solid waste. Washington DC. United States Environmental Protection Agency, Volume 1, Section B, Method 8330.

6.0 ATTACHMENTS

1. Calibration Data Form: Low, High, and Multi-Flow Sampling Pumps.

2. Field Monitoring Data Form: Integrated Monitoring for Particulates, Gases, Vapors, or Bioaerosols.

3. Chain Of Custody Record.

MORRISON KNUDSEN CORPORATION
NAVFAC SOUTHERN DIVISION

Attachment 1. Calibration Data Form: Low, High, and Multi-Flow Sampling Pumps

Name and Location of Calibration: _____

Calibration Conducted By: _____ Date Calibration Conducted: _____

Calibration Instrument (Type/Manufacturer/Model): _____

Air Sampling Pump (Type/Manufacturer/Model): _____

Collection Medium In Line: _____ Calibrator Volume: _____

Air Temperature: _____ °C Air Pressure: _____ mm Hg Relative Humidity: _____ %

Pump No.	Pre-Sampling Calibration Flow Rate (Q_{pre})					Post-Sampling Calibration Flow Rate (Q_{post})					Avg. Flow Rate
	Q (units)				Q_{pre}	Q (units)				Q_{post}	Q_{avg}
	Q_1	Q_2	Q_3	Q_{avg}	/min	Q_1	Q_2	Q_3	Q_{avg}	/min	/min

Calibration Notes:

MORRISON KNUDSEN CORPORATION
NAVFAC SOUTHERN DIVISION

Attachment 2. Field Monitoring Data Form: Integrated Monitoring for Particulates, Gases, Vapors, or Bioaerosols

Facility Name and Location: _____ Contaminant Sampled: _____

Monitoring Conducted By and Date: _____ Collection Media: _____

Monitoring Instrument (Type/Manufacturer/Model): _____

Air Temperature: _____ °C Air Pressure: _____ mm Hg Relative Humidity: _____ %

Identification of Personnel or Area	Field Sample ID No.	Pump No.	Pre-Sample Calibration Flow Rate	Post-Sample Calibration Flow Rate	Average Flow Rate (Q)	Sample Start-Time	Sample Stop Time	Total Sample Time (T)	Volume Sampled (Vol)

Field Notes:

1.0 PURPOSE

This procedure describes the methods which will be used to measure bacteria in windrowed soil.

2.0 ESTABLISH SAMPLING AND MONITORING LOCATIONS

Field SOP 1.0 describes the procedure to be followed for establishing the field measurement locations.

2.1 Establish Field Measurement

Each windrow shall be sampled at the four cross-sections from the central deep location. Each of these samples shall be evaluated for *aerobic heterotrophic* bacteria types and counts using the attached procedure. *The microbial enumeration procedures for polynuclear aromatic hydrocarbons (PAHs), volatile organic aromatic compounds (VOAs), specific hydrocarbons and oil degraders will not be performed as they are not expected to be present in the soils used in the composting process for the Pilot Scale Test.* Only one sampling event shall occur per week to test for the bacteria.

3.0 Analysis Results

Data shall be charted on a weekly basis documenting the bacteria counts and types per windrow. An evaluation shall made on the bacteria effects on degradation rates.

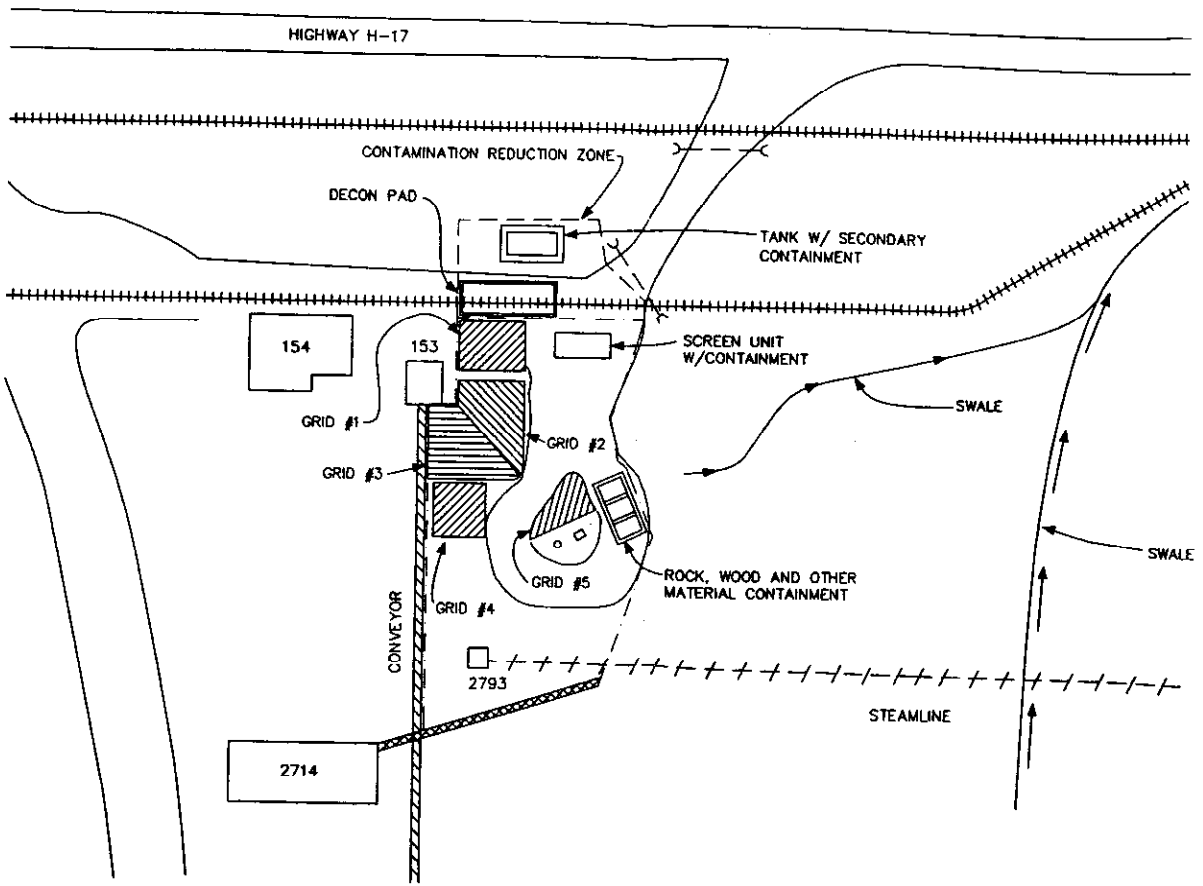

NOT TO SCALE

LEGEND

- BUILDING
- CONVEYOR
- STEAMLINE
- RAILROAD
- EXCLUSION ZONE LIMIT
- STRAW BALE SILT FENCE
- CONTAMINATION REDUCTION ZONE LIMIT

MORRISON KNUDSEN CORPORATION
ENVIRONMENTAL SERVICES

PILOT SCALE
OPERATIONAL PLAN
NSWC CRANE
CRANE, IN

FIGURE E-1
SOIL EXCAVATION PLAN
MINE FILL A, BLDG 153

APPENDIX F
SUPPLEMENT TO QAPP

TABLE OF CONTENTS

SECTION		PAGE
1.0	SCOPE AND OBJECTIVES	F-4
1.1	INTRODUCTION	F-4
1.2	PROCESS MONITORING TASKS AND OBJECTIVES	F-4
1.2.1	Process Monitoring Tasks	F-4
1.2.2	Data Quality Objectives for Process Monitoring	F-5
1.3	PROCESS MONITORING MEASUREMENT AND SAMPLE LOCATIONS AND FREQUENCY	F-~~5~~ ***6***
2.0	QUALITY ASSURANCE OBJECTIVES FOR PROCESS MONITORING DATA	F-7
2.1	FIELD PRECISION OBJECTIVES	F-7
2.2	FIELD ACCURACY OBJECTIVES	F-7
2.3	FIELD COMPLETENESS OBJECTIVES	F-7
2.4	REPRESENTATIVENESS OF FIELD DATA	F-7
2.5	COMPARABILITY OF FIELD DATA	F-7
3.0	PROCESS MONITORING MEASUREMENT AND SAMPLING PROCEDURES	F-8
3.1	PROCESS MEASUREMENTS	F-8
3.2	QA/QC MEASUREMENTS AND SAMPLES	F-8
3.2.1	Field Duplicate Measurements	F-~~8~~ ***9***
3.3	DECONTAMINATION PROCEDURES	F-9
3.4	FIELD METHOD AUDITS	F-~~9~~ ***10***
4.0	CUSTODY PROCEDURE	F-~~9~~ ***11***
4.1	FIELD CUSTODY PROCEDURES	F-~~10~~ ***11***
4.1.1	Field Documentation	F-~~10~~ ***11***
4.1.2	Measurement and Sample Identification	F-~~10~~ ***11***
5.0	CALIBRATION PROCEDURES AND FREQUENCY	F-~~11~~ ***12***
6.0	PROCESS MONITORING DATA REDUCTION, VALIDATION AND REPORTING	F-~~12~~ ***13***
6.1	DATA REDUCTION	F-~~12~~ ***13***
6.2	DATA ASSESSMENT AND CORRECTIVE ACTION	F-~~12~~ ***13***
6.3	DATA VALIDATION	F-~~12~~***13***
6.4	DATA REPORTING	F-~~13~~ ***14***

LIST OF TABLES

TABLE		PAGE
1-1	PROCESS MONITORING DATA COLLECTION TASKS	F-4
1-2	FIELD MEASUREMENT PARAMETERS AND ASSOCIATED MEASUREMENT AND ACCURACY RANGES	F-6
1-3	PROCESS MONITORING MEASUREMENT AND SAMPLING SCHEDULE	F-6
3-1	SUMMARY OF PROCESS MONITORING PROGRAM	F-9 ***8***
6-1	DATA ACCEPTANCE CRITERIA AND SUGGESTED CORRECTIVE ACTION	F-~~12~~ ***13***

QAPP APPENDIX

SECTION 1.0
SCOPE AND OBJECTIVES

1.1 INTRODUCTION

This QAPP Appendix presents the objectives, tasks, and QA/QC procedures associated with the measurement and monitoring of field parameters during the Pilot Scale study. The information in this appendix supplements the approved Pilot Scale QAPP.

1.2 PROCESS MONITORING TASKS AND OBJECTIVES

1.2.1 Process Monitoring Tasks

During the Pilot Scale study, ~~field~~ **proc: s** parameters will be measured **in the field** to evaluate the effectiveness of each compost mix. The individual field measurement data collection tasks are summarized in Table 1-1 and described below. Data collection tasks that require analytical data from an off-site laboratory are described in Section 8.0 of the Pilot Scale Operational Plan, and addressed in the approved Pilot Scale QAPP.

TABLE 1-1
PROCESS MONITORING DATA COLLECTION TASKS

TASK	DATA COLLECTED	DATA USE	DATA QUALITY LEVEL
Oxygen level monitoring	oxygen, %	monitor the effectiveness and progress of the compost cycle	field level
Temperature Monitoring	temperature, °C		field level
Moisture Level Monitoring	moisture, % MWHC		field level
pH Level Monitoring	pH		field level
Field level data is characterized by the use of portable instruments which can provide real-time data. Instrument calibration and correct data interpretation are required for data to be acceptable.			

Oxygen Level Monitoring

Oxygen levels will be monitored to ensure aerobic conditions are present in the windrows. Oxygen measurements will be collected each day prior to and following turning of the windrow.

Temperature Monitoring

Windrow temperature will be the primary indicator of successful operation of composting operations. Windrow temperature measurements will be collected each day prior to and following turning of the windrow.

Moisture Level Monitoring

Moisture level will be monitored to ensure optimum operating conditions for microbial growth and contaminant degradation. Moisture level measurements will be collected three times per week prior to windrow turning. If additional moisture is added during windrow turning, a second moisture level measurement will be collected following turning of the windrow.

pH Level Monitoring

pH level measurements will be collected once per week. pH data will be recorded but will not be used to change operating conditions.

1.2.2 Data Quality Objectives for Process Monitoring

The overall objective of collecting field measurements of process parameters during the Pilot Scale study is to obtain data of sufficient quality and quantity to determine that acceptable operating conditions are maintained in the windrows. The specific objective of each process monitoring sampling event is to collect representative data for the purpose of evaluating the variance in each process parameter (oxygen, temperature, moisture, pH) among samples from different locations within a single windrow.

The analytical level of process monitoring data will be field level for in-situ field measurements, as shown in Table 1-1. Measurement methods and acceptable reporting limits for the various field measurement parameters are presented in Table 1-2. The data quality objectives for precision, accuracy and completeness are described in Section 2.0.

TABLE 1-2 FIELD MEASUREMENT PARAMETERS AND ASSOCIATED MEASUREMENT AND ACCURACY RANGES		
PARAMETER	**MEASUREMENT METHOD**	**MEASUREMENT AND ACCURACY RANGES**
Oxygen	oxygen probe	range = 0 - ~~22~~ ***21***% in 1% increments
Temperature	hand-held compost temperature probe	range = 0 to 93°C in 1° increments ***or 0 - 200° F in 1° increments***
Moisture Level	sample weighing and drying	weights reported to the tenth of a gram
pH	pH meter	range = 4.0 to 10.0; pH reported to the tenth of a pH unit

1.3 PROCESS MONITORING MEASUREMENT AND SAMPLE LOCATIONS AND FREQUENCY

Locations for process monitoring measurements and samples are described in Section 9.1 of ~~the~~ **this** Pilot Scale Operational Plan. A summary of the process monitoring schedule is presented in Table 1-3 ~~of this appendix~~ **below:**

TABLE 1-3 PROCESS MONITORING MEASUREMENT AND SAMPLING SCHEDULE				
PARAMETER	**SAMPLING/ ANALYTICAL METHOD**	**NUMBER OF SAMPLES PER SAMPLING EVENT**	**VOLUME REQUIRED PER SAMPLE**	**SAMPLING SCHEDULE**
Oxygen	Field SOP 1.0	6 per cross-section (24 total)	in situ measurement	Daily
Temperature	Field SOP 1.0	6 per cross-section (24 total)	in situ measurement	Daily
Moisture Level	Field SOP 1.0	3 per cross section (12 total)	~~in situ~~ **ex situ** measurement **volume designated in Field SOP**	Three times per week **and after moisture added to any pile**
pH	Field SOP 1.0	1 per cross section (4 total)	~~in situ~~ **ex situ** measurement **on sample left from moisture sampling**	Once per week

SECTION 2.0
QUALITY ASSURANCE OBJECTIVES FOR PROCESS MONITORING DATA

2.1 FIELD PRECISION OBJECTIVES

Field duplicate data will be evaluated to determine potential variability introduced by sampling or measurement techniques. This evaluation will be performed during data verification and summarized in the data assessment. One duplicate sample or measurement will be collected for every ~~20~~ ***24*** or fewer samples or measurements to qualitatively evaluate precision. ***If duplicates are over 1% different, then 2 duplicates shall be taken per event.***

2.2 FIELD ACCURACY OBJECTIVES

Accuracy for field measurements will be ensured by adhering to established Field SOPs found in Appendix D.

2.3 FIELD COMPLETENESS OBJECTIVES

Field completeness for process monitoring data will be 85%. This goal reflects the ability to collect additional samples or measurements, if necessary, to complete the data set.

2.4 REPRESENTATIVENESS OF FIELD DATA

Representativeness is addressed by establishing a well-designed sampling program. The rationale for the sampling program is described in Section 8.0 of ~~the~~ **this** Pilot Scale Operational Plan. Sampling locations and frequencies have been selected so that the material sampled will be representative of the appropriate windrow or windrow section.

2.5 COMPARABILITY OF FIELD DATA

The comparability goal will be achieved by using established Field SOPs and by reporting data in appropriate units. Field measurement procedures are designed to ensure comparability of data within a single windrow, and among different windrows.

SECTION 3.0
PROCESS MONITORING MEASUREMENT AND SAMPLING PROCEDURES

3.1 PROCESS MEASUREMENTS

Process monitoring field measurements and samples will be collected from the sampling locations shown in Figure 1-1 in Field SOP 1.0 in Appendix D. Sample locations other than those that are pre-designated will be clearly identified in the field logbook. The sampling schedule is shown in Table 1-3 of this appendix. A summary of the process monitoring program is provided in Table 3-1.

Field measurements will be collected only with kits, instruments, tools, gauges, or other measuring devices that are controlled, calibrated, adjusted and maintained in accordance with the maintenance and calibration requirements described in Field SOP 1.0 in Appendix D.

TABLE 3-1
SUMMARY OF PROCESS MONITORING PROGRAM

TASK	PARAMETERS	SAMPLING FREQUENCY	FIELD DUPLICATES
Oxygen level monitoring	oxygen	6 per cross-section (24 per event)	~~5%~~ (at least one per event)
Temperature Monitoring	temperature	6 per cross-section (24 per event)	~~5%~~ (at least one per event)
Moisture Level Monitoring	moisture	3 per cross section (12 per event)	~~5%~~ (at least one per two events)
pH Level Monitoring	pH	1 per cross section (4 per event)	~~5%~~ (at least one per 5 events)

3.2 QA/QC MEASUREMENTS AND SAMPLES

QA/QC measurements and samples will be collected to ensure that representative and reproducible data are obtained. QA/QC measurements associated with process monitoring field measurements are described below.

3.2.1 Field Duplicate Measurements

Field duplicate data will be evaluated to determine potential variability introduced by sampling or measurement techniques. One duplicate sample or measurement will be collected for every 20 or fewer samples or measurements to qualitatively evaluate precision. The precision of field duplicate measurements will be determined by calculating the relative percent difference (RPD) between the original and the duplicate measurement. The calculation for RPD is provided in Section 12.0 of the **approved** Pilot Scale QAPP.

3.3 DECONTAMINATION PROCEDURES

Procedures for decontamination of large equipment, sampling equipment, and personnel are described in Field SOP 3.0 in Appendix D. Large equipment will be decontaminated in a designated decontamination facility. All non-disposable sampling equipment will be decontaminated after each sample or measurement. Personnel will remove and dispose of or clean PPE within the designated personnel decontamination area. The extent of known contamination will determine the degree of decontamination required. If the extent of contamination cannot be readily determined, cleaning will be performed according to the assumption that the equipment is highly contaminated. The windrow machine will be inspected between windrows and all loose dirt will be swept or brushed off the exterior.

Decontamination water from the large equipment decontamination facility will be stored in a dedicated tank. Decontamination water and water collected in sumps will either be ~~recycled as compost process water or~~ transported to a wastewater treatment facility at Rockeye or Mine Fill A **or disposed according to Navy EPD procedures,** as described in Section 4.7 of the approved Pilot Scale QAPP.

Equipment rinsate blanks will be collected to ensure that sampling equipment is clean and that the potential for cross-contamination has been minimized or prevented. Rinsate blanks will be collected from the final *~~reagent~~ deionized ~~grade~~* water rinse used in sample equipment decontamination as described in Section 4.6 of the approved Pilot Scale QAPP.

Decontamination of sampling probes is addressed in Appendix D of this Operational Plan.

Decontamination of sampling equipment is addressed in Appendix D of this Operational Plan.

3.4 FIELD METHOD AUDITS

Field methods may be audited at any time during the Pilot Scale Study by the U.S. Navy and the U.S. EPA.

SECTION 4.0
CUSTODY PROCEDURES

4.1 FIELD CUSTODY PROCEDURES

4.1.1 Field Documentation

All field data will be recorded in bound field logbooks ***or on the Daily Process Data Forms described in the SOPs***. Entries will be described in as much detail as possible. ~~*Field logbooks will be assigned to project personnel an will be stored in the project document control center when not in use.*~~ Each logbook will be identified with a specific document number. Field logbook title page information and data recording procedures will be as described in Section 5.1 of the approved Pilot Scale QAPP.

4.1.2 Measurement and Sample Identification

Field ~~*measurements*~~ ***samples*** will be identified using the ~~*following*~~ format ***described in Section 5.1 of the approved Pilot Scale QAPP.***

~~*mixXXXXXX*~~

- ~~*mix - precedes the windrow number and indicates a mix for the pilot scale study*~~
- ~~*the first 'X' indicates the mix or windrow number (1-8)*~~ ~~***(1-7, etc.)***~~
- ~~*the second and third 'X's indicate the day sampled (00, 07, 14, 21, 28, etc.)*~~ ~~***(00, 05, 10, 20, 30, 40, 60)***~~
- ~~*the fourth 'X' indicates whether the sample was collected before (b) or after (a) turning*~~
- ~~*the fifth 'X' indicates the cross-section letter (A, B, C, or D)*~~
- ~~*the sixth 'X' indicates the sample location within the cross-section (1 through 6)*~~

~~*Therefore, an example temperature measurement identification number is:*~~

~~*mix303aB5,*~~ ~~***mix 305aB5***~~

~~*which indicates a measurement collected from mix (windrow) number three, on the third* ***fifth*** *day, after turning, from cross section 'B' at sample location 5.*~~

~~*Field duplicate measurements will be labeled using the same protocol as regular measurements, but will have the letters 'FD' added to the end. Since field duplicate measurements are not sent to a laboratory, there is no need to hide its identification as a duplicate.*~~

SECTION 5.0
CALIBRATION PROCEDURES AND FREQUENCY

Field instruments will be calibrated in accordance with manufacturer's instructions and Field SOP 1.0 in Appendix D. Instruments including the oxygen/temperature probe and pH meter will be calibrated daily prior to use. Calibration data will be documented in the field logbook.

SECTION 6.0
PROCESS MONITORING DATA REDUCTION, VALIDATION AND REPORTING

6.1 DATA REDUCTION

Data from direct read instrumentation will be recorded in field logbooks immediately after measurements are taken. If errors are made, results will be legibly crossed out, initialed and dated by the field sampler, and corrected in a space adjacent to the original (erroneous) entry.

The precision of field duplicate measurements will be determined by calculating the relative percent difference (RPD) between the original and the duplicate measurement. The calculation for RPD is provided in Section 12.0 of the approved Pilot Scale QAPP.

6.2 DATA ASSESSMENT AND CORRECTIVE ACTION

RPD will be calculated on a weekly basis. There are no standard acceptance criteria for field measurement data. The criteria in Table 6-1 will be used to determine the need for closer examination of data collection and instrument calibration procedures, however, accedence of these suggested values will not be cause for rejection of the data. ***Note that Oxygen criteria varies significantly due to the wide variety of material consistency and instrument readouts in 1° increments. Duplicate readings shall be watched.***

TABLE 6-1
DATA ACCEPTANCE CRITERIA AND SUGGESTED CORRECTIVE ACTION

MEASUREMENT	ACCEPTABLE RPD	CORRECTIVE ACTION
~~*Oxygen Level*~~	~~*20%*~~	~~• *check instrument calibration*~~ ~~• *verify adherence to Field SOP*~~
Temperature	10%	• check instrument calibration • verify adherence to Field SOP
Moisture Level	20%	• verify adherence to Field SOP
pH	15%	• check instrument calibration • verify adherence to Field SOP

6.3 DATA VALIDATION

Validation of field measurement data will consist of checking for transcription errors and reviewing field log books.

6.4 DATA REPORTING

Field measurement data will be tabulated and submitted as required. The Pilot Scale Study Final Report will provide summary tables and graphs of the field measurement data. All field measurement data sheets and logbooks will be retained. Raw data will be identified and included in a separate appendix of the final report. The report will contain a section on QA issues documenting any corrective actions taken during the Pilot Scale Study. Reporting requirements are described in Section 12.0 of ~~the~~ **this** Pilot Scale Operational Plan.

Windrow Process Data - Daily Log

Date:

Windrow Number: 1 Day: not started	Ambient Conditions	Inspection
'e Windrow Constructed: not started	Relative Humidity: %	Inspected by: Peter Chevalier
Windrow Size: H ft, W ft, L ft	Temperature: ° C	Performed by: Ken Phillips
Texture:	Wind: Calm Low Med Gusty	
Time of Turning:		Distance between pin flags A & D: ft
Moisture Addition: gals.	Wind Direction: East, 5mph	

Sample Grid	Sample Location	Before Turning							After Turning					
		Time of Sample Start	MWHC percent	pH	Temp (C)		Oxygen %		Time of Sample Start	MWHC percent	Temp (C)		Oxygen %	
					1.0'	2.5'	1.0'	2.5'			1.0'	2.5'	1.0'	2.5'
A	1a													
	1													
	2a													
	2													
	3a													
	3													
B	1a													
	1													
	2a													
	2													
	3a													
	3													
C	1a													
	1													
	2a													
	2													
	3a													
	3													
D	1a													
	1													
	2a													
	2													
	3a													
	3													
Duplicates														

Description of Windrow:

Oxygen/temperature monitor calibration: Pre: %; ° C. Post: %; ° C.

Comments:

LMDFR ILS

Laboratory Moisture Data Form

Date 12-Sep

Mix	Cross Section	T_1	G_1	W_1	GS_1	S_1	GD_1	D_1	M_{W1}	M_{S1}	PM	PMS	PS	PWHC	pH	Day #
3	A			-		-		-	-	-	#DIV/0!	#DIV/0!	#DIV/0!	#DIV/0!		3 pre post
	B			-		-		-	-	-	#DIV/0!	#DIV/0!	#DIV/0!	#DIV/0!		
	C			-		-		-	-	-	#DIV/0!	#DIV/0!	#DIV/0!	#DIV/0!		
	D			-		-		-	-	-	#DIV/0!	#DIV/0!	#DIV/0!	#DIV/0!		
Dup				-		-		-	-	-	#DIV/0!	#DIV/0!	#DIV/0!	#DIV/0!		
4	A			-		-		-	-	-	#DIV/0!	#DIV/0!	#DIV/0!	#DIV/0!		4 pre post
	B			-		-		-	-	-	#DIV/0!	#DIV/0!	#DIV/0!	#DIV/0!		
	C			-		-		-	-	-	#DIV/0!	#DIV/0!	#DIV/0!	#DIV/0!		
	D			-		-		-	-	-	#DIV/0!	#DIV/0!	#DIV/0!	#DIV/0!		
Dup				-		-		-	-	-	#DIV/0!	#DIV/0!	#DIV/0!	#DIV/0!		
5	A			-		-		-	-	-	#DIV/0!	#DIV/0!	#DIV/0!	#DIV/0!		2 pre post
	B			-		-		-	-	-	#DIV/0!	#DIV/0!	#DIV/0!	#DIV/0!		
	C			-		-		-	-	-	#DIV/0!	#DIV/0!	#DIV/0!	#DIV/0!		
	D			-		-		-	-	-	#DIV/0!	#DIV/0!	#DIV/0!	#DIV/0!		
Dup				-		-		-	-	-	#DIV/0!	#DIV/0!	#DIV/0!	#DIV/0!		
7a	A			-		-		-	-	-	#DIV/0!	#DIV/0!	#DIV/0!	#DIV/0!		3 pre post
	B			-		-		-	-	-	#DIV/0!	#DIV/0!	#DIV/0!	#DIV/0!		
	C			-		-		-	-	-	#DIV/0!	#DIV/0!	#DIV/0!	#DIV/0!		
	D			-		-		-	-	-	#DIV/0!	#DIV/0!	#DIV/0!	#DIV/0!		
Dup				-		-		-	-	-	#DIV/0!	#DIV/0!	#DIV/0!	#DIV/0!		
7b	A			-		-		-	-	-	#DIV/0!	#DIV/0!	#DIV/0!	#DIV/0!		2 pre post
	B			-		-		-	-	-	#DIV/0!	#DIV/0!	#DIV/0!	#DIV/0!		
	C			-		-		-	-	-	#DIV/0!	#DIV/0!	#DIV/0!	#DIV/0!		
	D			-		-		-	-	-	#DIV/0!	#DIV/0!	#DIV/0!	#DIV/0!		
Dup				-		-		-	-	-	#DIV/0!	#DIV/0!	#DIV/0!	#DIV/0!		
8	A			-		-		-	-	-	#DIV/0!	#DIV/0!	#DIV/0!	#DIV/0!		4 pre post
	B			-		-		-	-	-	#DIV/0!	#DIV/0!	#DIV/0!	#DIV/0!		
	C			-		-		-	-	-	#DIV/0!	#DIV/0!	#DIV/0!	#DIV/0!		
	D			-		-		-	-	-	#DIV/0!	#DIV/0!	#DIV/0!	#DIV/0!		
Dup				-		-		-	-	-	#DIV/0!	#DIV/0!	#DIV/0!	#DIV/0!		
1	A			-		-		-	-	-	#DIV/0!	#DIV/0!	#DIV/0!	#DIV/0!		not started pre post
	B			-		-		-	-	-	#DIV/0!	#DIV/0!	#DIV/0!	#DIV/0!		
	C			-		-		-	-	-	#DIV/0!	#DIV/0!	#DIV/0!	#DIV/0!		
	D			-		-		-	-	-	#DIV/0!	#DIV/0!	#DIV/0!	#DIV/0!		
Dup				-		-		-	-	-	#DIV/0!	#DIV/0!	#DIV/0!	#DIV/0!		

Laboratory Moisture Data Form Definitions

T_1	Tare weight of weigh boat.
G_1	Gross weight of sample and weigh boat.
W_1	Net weight of sample. ($G_1 - T_1$)
GS_1	Gross weight of saturated sample and weigh boat.
S_1	Saturated weight of sample. ($GS_1 - T_1$)
GD_1	Gross dry weight.
D_1	Dry weight of sample. ($GD_1 - T_1$)
M_{W1}	Mass of water in original sample. ($W_1 - D_1$)
M_{S1}	Mass of water at saturation. ($S_1 - D_1$)
PM	Percent moisture of original sample. ($[M_{W1}/W_1] \times 100$)
PMS	Percent moisture at saturation. ($[M_{S1}/S_1] \times 100$)
PS	Percent saturation. ([PM/PMS] x 100)
PWHC	Percent water holding capacity. ($[M_{W1}/M_{S1}] \times 100$)

APPENDIX H
QUALITY CONTROL PLAN

NSWC CRANE
PILOT SCALE OPERATIONAL ACTIVITIES

QUALITY CONTROL PLAN

CONTRACT #N62467-93-D-1106

REVISION ~~#1~~ *2*
~~June 6, 1997~~
August 14, 1997

Prepared For:

SOUTHERN DIVISION
NAVAL FACILITIES ENGINEERING COMMAND
P.O. Box 190010
2155 Eagle Drive
North Charleston, South Carolina 29419-9010

Prepared By:

MORRISON KNUDSEN CORPORATION
2420 Mall Drive
Corporate Square 1 - Suite 211
North Charleston, South Carolina 29406

TABLE OF CONTENTS

SECTION		PAGE
1.	INTRODUCTION	1
2.	QUALITY CONTROL PLAN	1
2.1	Definable Features of Work	~~1~~ ***4***
2.2	Three Phases of Control	~~3~~ ***4***
2.3	Quality Assurance Procedures	~~3~~ ***4***
2.4	Data Quality Objectives	~~3~~ ***4***
2.5	Preconstruction/Quality Control Meetings	~~3~~ ***5***
3.	QUALITY CONTROL PERSONNEL	***6***
3.1	Program Quality Control Manager (PQCM)	***6***
3.2	Site Quality Control Supervisor (SQCS)	***6***
3.3	Laboratory Quality Control Personnel	***8***
4.	SUBMITTALS	***9***
4.1	MK PMO to Southern Division Submittals	***10***
4.2	Subcontractor Submittals	***10***
4.3	Site Submittals	***10***
5.	INSPECTION SYSTEM	***11***
5.1	Three Phases of Control	***11***
5.1.1	Preparatory Inspection	***11***
5.1.2	Initial Inspection	***12***
5.1.3	Follow-Up Inspection and Surveillance	***13***
5.1.4	Final Inspections and Beneficial Occupancy Date	***14***
5.2	Documentation	***14***
5.3	Testing Plan and Log	***16***
5.4	Rework Items List	***16***
5.5	As-Built Records	***16***
5.6	Report Forms	***17***
6.	TESTING PLAN AND LOG	***17***
7.	REWORK PROCEDURES	***18***
8.	QUALITY RECORDS	***19***

TABLE OF CONTENTS

SECTION		PAGE
9.	LABORATORY QUALIFICATION REQUIREMENTS	*22*
9.1	Analytical Chemistry Laboratories	*22*
9.2	Geotechnical and Material Testing Laboratories	*23*
9.2.1	Accredited Laboratories	*23*
9.2.2	*Non-accredited Laboratories*	*24*
9.3	Test Results	*25*
10.	INSPECTION/PROGRESS SCHEDULE	*25*
11.	REFERENCED PROCEDURES	*26*
~~12.~~	~~TABLES~~	

FIGURES

FIGURE		PAGE
3-1	MK QUALITY INTERFACES RAC DISTRICT II	*8*
4-1	GENERAL SUBMITTALS FLOW	*9*
7-1	BASIC DEVIATION RESOLUTION	*20*

TABLES

TABLE		PAGE
1-1	Quality Program Elements	*2*
2-1	Typical Quality Records[11]	*21*

1. INTRODUCTION

The Quality Control requirements for activities associated with execution of Delivery Orders for Southern Division, Naval Facilities Engineering Command (SOUTHDIV) District II Response Action Contract (RAC) are presented in two primary areas:

- Physical construction/remediation action activities covered under this Delivery Order Execution Quality Control Plan (QCP) as supplemented by Delivery Order specific requirements in Section 5 of each Work Plan; and

- Chemical data quality objectives and specific sampling and analysis quality requirements covered in Quality Assurance Project Plans (QAPjP) developed for each specific Delivery Order and contained as Appendix B of the Work Plan.

The quality requirements for these activities are presented in separate plans because of the different types of controls applied to each. Examples of the types of physical and chemical quality requirements contained in each plan are presented in Table 1-1.

2. QUALITY CONTROL PLAN

The QCP presented herein is structured to implement the basic controls necessary to achieve and maintain a consistently high level of quality in environmental remediation activities performed for Southern Division. This consistency will be accomplished through the application of the *Three Phases of Control* quality control system and documentation of testing and inspection activities for each Definable Feature of Work. This QCP provides the framework of quality control activities that are implemented for all Delivery Orders and is supplemented by information that is unique for each individual Delivery Order. This information is found in Section 5 of each Delivery Order Work Plan.

A Definable Feature of Work (DFOW) is defined as "a task which is separate and distinct from other tasks and requires separate control requirements." Using a Delivery Order involving UST Removal actions as an example, typical Definable Features of Work may include Site Preparatory Work; Above Tank Soil Excavation, Storage, and Disposition; Tank Residual Product Removal; Tank and Ancillary Equipment Removal, Storage, and Disposal; Soil Excavation, Storage, and Disposition; Field Sampling; Decontamination Actions; Run on/Run off Control; Backfill Placement; Topsoil Placement; and Site