N00164.AR.000491
NSWC CRANE
5090.3a

Addendum #1
Interim Measures Report, SWMU 16/16
Cast High Explosive/Incinerator Building 146 Area

Voluntary Interim Measures
NSWC Crane, Crane, Indiana

Contract No. N62467-93-D-1106

December 1999

Southern Division
Naval Facilities Engineering Command
North Charleston, South Carolina
29419-9010

A.R.

DEPARTMENT OF THE NAVY
CRANE DIVISION
NAVAL SURFACE WARFARE CENTER
300 HIGHWAY 361
CRANE, INDIANA 47522-5000

IN REPLY REFER TO:

5090
Ser 095/9182
14 SEP 1999

U.S. Environmental Protection Agency, Region V
Waste, Pesticides, & Toxics Division
Waste Management Branch
Illinois, Indiana, and Michigan Section
ATTN: Mr. Peter Ramanauskas (DW-8J)
77 West Jackson Blvd.
Chicago, IL 60604

Dear Mr. Ramanauskas:

Crane Division, Naval Surface Warfare Center (NAVSURFWARCENDIV Crane) submits Addendum #1, Interim Measures Report, Cast High Explosive/Incinerator Building 146 Area as enclosure (1). This report is submitted as a Draft version. The required Certification Statement is provided as enclosure (2).

NAVSURFWARCENDIV Crane point of contact is Mr. Thomas J. Brent, Code 09510, telephone 812-854-6160.

Sincerely,

JAMES M. HUNSICKER
Director, Environmental
Protection Department
By direction of
the Commander

Encl:
(1) Addendum #1, Interim Measures Report, Building 146 Area
(2) Certification Statement

Copy to:
ADMINISTRATIVE RECORD (w/2 copies)
SOUTHNAVFACENGCOM (Code 1864) (w/o encl)
IDEM (Mike Sickels) (w/1 copy)

I certify under penalty of law that this document and all attachments were prepared under my direction or supervision in accordance with a system designed to assure that qualified personnel properly gather and evaluate the information submitted. Based on my inquiry of the person or persons who manage the system, or those persons directly responsible for gathering the information, the information submitted is, to the best of my knowledge and belief, true, accurate, and complete. I am aware that there are significant penalties for submitting false information, including the possibility of fine and imprisonment for knowing violations.

SIGNATURE

ENV. PROT. DEPT MGR
TITLE

9/15/99
DATE

Enclosure (2)

ADDENDUM #1
INTERIM MEASURES REPORT, SWMU 16/16
CAST HIGH EXPLOSIVE/INCINERATOR BUILDING 146 AREA

VOLUNTARY INTERIM MEASURES
NSWC CRANE, CRANE, INDIANA

December 3, 1999

CONTRACT N62467-93-D-1106
DELIVERY ORDER #0027
STATEMENT OF WORK #036

Prepared for

SOUTHERN DIVISION
NAVAL FACILITIES ENGINEERING COMMAND
2155 Eagle Drive
P.O. Box 190010
North Charleston, South Carolina 29419-9010

Prepared by:

MORRISON KNUDSEN CORPORATION
2420 Mall Drive
Corporate Square 1 - Suite 211
North Charleston, South Carolina 29406

PREPARED/APPROVED BY:

B. Venky Venkatesh / Steven Travis
MK Project Engineer

12/3/99
Date

APPROVAL:

Alan Fosdick
Program Manager

12/3/99
Date

TABLE OF CONTENTS

SECTION **PAGE**

EXECUTIVE SUMMARY i

ACRONYMS AND ABBREVIATIONS v

1.0 INTRODUCTION 1-1
1.1 PURPOSE AND OBJECTIVE 1-1
1.2 DOCUMENT ORGANIZATION 1-2

2.0 SITE BACKGROUND 2-1
2.1 SITE DESCRIPTION 2-1
2.2 ENVIRONMENTAL SETTING 2-1

3.0 WORK EXECUTION 3-1
3.1 SITE CHARACTERIZATION 3-1
3.1.1 East Sump 3-1
3.1.2 West Sump 3-1
3.1.3 Building 146 Dock Sump Samples 3-1
3.2 WATER TREATMENT 3-1
3.2.1 Overflow Events 3-2
3.2.2 East Sump 3-3
3.2.3 West Sump 3-3
3.3 GEOPROBE SOIL SAMPLING 3-3
3.3.1 Summary of Geoprobe Results 3-3
3.4 PIPING INSTALLATION, RE-ROUTING, AND REPAIR 3-4
3.4.1 Smoke Test 3-4
3.4.2 West Sump Sewer Line 3-4
3.4.3 Re-routing of Building Roof Drains 3-4
3.4.4 Floor Drain Abandonment 3-4
3.4.5 Sump Pump Installation 3-4
3.4.6 Excavated Soil 3-5
3.5 SITE RESTORATION AND DECONTAMINATION 3-5

4.0 FIELD AND LABORATORY DATA QUALITY CONTROL 4-1
4.1 DATA QUALITY CONTROL AIR STRIPPER SAMPLES 4-1
4.1.1 Field Quality Control 4-1
4.1.2 Laboratory Quality Control 4-2
4.2 DATA QUALITY CONTROL GEOPROBE SAMPLES 4-2
4.2.1 Field Quality Control 4-3
4.2.2 Laboratory Quality Control 4-3
4.3 DATA QUALITY CONTROL WASTE PILE SAMPLES 4-3
4.3.1 Field Quality Control 4-4
4.3.2 Laboratory Quality Control 4-4

5.0 SUMMARY AND CONCLUSIONS 5-1

6.0 REFERENCES AND BIBLIOGRAPHY 6-1

TABLE OF CONTENTS (Continued)

LIST OF FIGURES

FIGURE		PAGE
2-1	VICINITY MAP OF NSWC CRANE	2-2
2-2	LOCATION OF SOLID WASTE MANAGEMENT UNIT 16/16	2-3
2-3	EAST AND WEST SUMP LOCATIONS	2-4
3-1	SOIL BORING LOCATIONS	3-6
3-2	REWORKED DRAINS AT BUILDING 146	3-7

LIST OF APPENDICES

APPENDIX		PAGE
A	APPROVALS, PERMITS AND REGULATORY INFORMATION	A-1
B	AIR STRIPPER DRAWINGS	B-1
C	PHOTOGRAPHS	C-1
D	SAMPLE ANALYSIS TABLES AND TCE LEVEL GRAPHS	D-1
E	MANIFESTS AND DISPOSAL INFORMATION	E-1

ACRONYMS AND ABBREVIATIONS

CAAA	Crane Army Ammunition Activity
CEC	CompuChem Environmental Corporation
CLP	Contract Laboratory Program
HSWA	Hazardous and Solid Waste Amendments
IDEM	Indiana Department of Environmental Management
IM	Interim Measure
IMR	Interim Measures Report
LCS	Laboratory Control Samples
MCL	Maximum Contaminant Level
mg/l	Milligrams per Liter
μg/l	Microgram per Liter
MK	Morrison Knudsen Corporation
MS	Matrix Spike
MSD	Matrix Spike Duplicate
NAVFACENGCOM	Naval Facilities Engineering Command
NEESA	Naval Energy and Environmental Support Activity
NSWC	Naval Surface Warfare Center
PCB	Polychlorinated Biphenyl
ppb	Parts Per Billion
ppm	Part Per Million
QC	Quality Control
RFI	RCRA Facility Investigation
RCRA	Resource Conservation and Recovery Act
ROICC	Resident Officer In Charge of Construction
SOUTHDIV	Southern Division
SOW	Statement of Work
SWMU	Solid Waste Management Unit
TCE	Trichloroethylene
TSCA	Toxic Substance Control Act
U.S. EPA	United States Environmental Protection Agency
VOC	Volatile Organic Compounds

EXECUTIVE SUMMARY

Voluntary Interim Measures were conducted at SWMU 16/16, the Cast High Explosive/Incinerator Building 146 area, NSWC Crane, Crane, Indiana from 1996 to 1998. This report is an addendum to the Interim Measures Report (IMR) for SWMU 16/16 [MK,1997], and is provided to include work performed since the submittal of that IMR. The need for these measures was discovered while the previous work at SWMU 16/16, under Delivery Order #0009, was being completed. During the cleaning of the east and west sumps as part of Delivery Order #0009, it was discovered that high levels of TCE was entering the sumps through the inlet piping. It was determined that the effluent required treatment prior to discharge. Therefore, a new Delivery Order was established to provide means to treat the TCE contaminated water as an emergency action. This new work was completed under Delivery Order #0027. The objective was to sample and treat water that had drained into the east and west sumps containing elevated levels of trichloroethylene (TCE). The work scope was expanded to include the following:

- Conduct Geoprobe soil sampling and analysis
- Conduct a smoke test to determine the source of the contaminated water
- Repair a broken sewer pipe section; reroute roof drains on Building 146 away from the sumps; and grout the floor drains
- Install sump pumps and new piping from the sumps to the sanitary sewer
- Dispose of polychlorinated biphenyl (PCB)-contaminated soil

A Construction Permit for this work was approved by Indiana Department of Environmental Management (IDEM). An air stripper was purchased and installed to treat the water draining into the west sump as well as the TCE contaminated water found in the east sump. Water in the east sump was pumped to the west sump and treated by the air stripper. A total of 900,425 gallons of water were treated by the air stripper from May 2, 1996 to September 26, 1997. The stripper was dismantled on September 27, 1997 and the area was decontaminated.

A smoke test was conducted June 17, 1996 on the east and west sumps to locate the source of the contaminated water. This test showed that a portion of the water entering the sumps was flowing from underneath Building 146 and a portion was flowing from the roof drainage system. The test also revealed a section of broken sewer pipe, which was excavated and repaired in July 1996.

New piping was installed connecting the sumps directly to the sanitary sewer. The roof drains on Building 146 were routed away from the two sumps. The floor drains in Building 146 were grouted so no water could reach the sumps from the floor drains. Since groundwater could still get into the sumps from underneath the building, sump pumps were installed to pump out the sumps to the sanitary sewer when the water level within the sumps reached a pre-determined elevation. This work was completed in August and September of 1997 and operation of the air stripper was discontinued.

Excavated soil from the new pipeline installation was sampled in September of 1997 and found to contain PCBs. Approximately 43 tons of the PCB-contaminated soil was removed and transported to Wayne Disposal in Michigan as Toxic Substance Control Act (TSCA)-regulated waste in April 1998.

1.0
INTRODUCTION

Promulgation of the United States Environmental Protection Agency's (U.S. EPA's) regulatory program under the Resource Conservation and Recovery Act (RCRA) provided the impetus to identify and control environmental contamination from past practices at NSWC Crane. On December 23, 1989, the U.S. EPA issued the federal portion of the final RCRA Part B permit for NSWC Crane to the US Navy and issued the permit renewal for a period of five years on July 31, 1995. This permit contains both the Federal permit conditions and the State permit conditions, which were issued separately by the State of Indiana RCRA program. It establishes the Hazardous and Solid Waste Amendment (HSWA) Corrective Action Requirements and Compliance Schedules for NSWC Crane, obligating the US Navy to perform RCRA Facility Investigations (RFIs) at 30 SWMUs, to conduct Corrective Measures Studies and to implement corrective measures, if needed. Voluntary interim measures were performed at SWMU 16/16.

1.1 PURPOSE AND OBJECTIVE

Morrison Knudsen Corporation (MK) was contracted by the Southern Division (SOUTHDIV), Naval Facilities Engineering Command (NAVFACENGCOM), under Contract #N62467-93-D-1106, Delivery Order #0009, Statement of Work #007 and Delivery Order #0027, Statement of Work #036 to remediate Solid Waste Management Units (SWMUs) at Naval Surface Warfare Center (NSWC) Crane, Crane, Indiana. This Interim Measures Report (IMR) Addendum summarizes all construction and environmental tasks associated with SWMU 16/16, Cast High Explosive/Incinerator Building 146 Area beyond the scope of the original IMR [MK,1997]. This additional work included the following:

- Installation of an air stripper to remove trichloroethylene (TCE) from two building exterior sumps (east and west)
- Investigation and testing to determine the source of TCE contaminated water accumulating in the sumps using the smoke test
- Repair a broken sewer pipe section; reroute roof drains on Building 146 away from the sumps; and grout the floor drains
- Installation of sump pumps and new piping from the sumps to the sanitary sewer
- Disposal of polychlorinated biphenyls (PCBs)-contaminated soil

MK provided project management, construction management, scientific, environmental, health and safety oversight, and quality control oversight services for this project. MK's primary subcontractor, US Tech, provided excavation, removal and disposal, and backfilling/restoration services. CompuChem Environmental Corporation (CEC) provided analytical services under contract to MK. The air stripper was operated and maintained by MK.

The target cleanup level for this Interim Measure (IM) was taken from *"Drinking Water Regulations and Health Advisories"*, October 1996 (U.S. EPA, 1996), as site-specific risk based cleanup levels have not been developed for NSWC Crane. The maximum contaminant level (MCL) for TCE is 0.005 mg/l (ppm). The detection level for TCE in the samples was 10 μg/l (ppb) and all of the air stripper effluent samples taken after April 5, 1997 were below that level. Prior to that date, five samples were recorded at TCE concentration greater than 10 μg/l where the highest effluent level was 22 μg/l. Although for some samples the concentration of TCE was higher than the MCL, the waste was not a hazardous waste by characteristic. According to 40 CFR 261.24, "A solid waste exhibits the characteristic of toxicity if, using the Toxicity Characteristic Leaching Procedure, test Method 1311 in "Test Methods for Evaluating Solid Waste, Physical/Chemical Methods," EPA Publication SW-846, the extract from a representative sample of the waste contains any of the contaminants listed in table 1 (for TCE, the toxicity characteristic level is 500 μg/) at the concentration equal to or greater than the respective value given in that table".

1.2 DOCUMENT ORGANIZATION

The intent of this document is to show the sequence of work that was completed at SWMU 16/16 beyond the scope of the original IMR. Section 2.0 provides some background information about the site and SWMU 16/16. Section 3.0 provides a discussion of the work that was performed and the dates when they were completed. Analytical data quality control is discussed in Section 4.0. A summary of conclusions with regards to the work completed is presented in Section 5.0 and Section 6.0 lists the documents referenced in preparing this report.

Any pertinent information not contained in the body of the report is contained in the appendices. This includes photographs, sample data, and regulatory documents like permits and manifests. These appendices include:

APPENDIX A: APPROVALS, PERMITS, AND REGULATORY INFORMATION
APPENDIX B: AIR STRIPPER DRAWINGS AND MANUALS
APPENDIX C: PHOTOGRAPHS
APPENDIX D: SAMPLE ANALYSIS TABLES AND TCE LEVEL GRAPHS
APPENDIX E: MANIFESTS AND DISPOSAL INFORMATION

2.0
SITE BACKGROUND

2.1 SITE DESCRIPTION

NSWC Crane consists of 62,463 acres located approximately 75 miles south of Indianapolis, Indiana. The site, shown in Figure 2-1, provides support for equipment, shipboard weapons systems, and ordnance. NSWC Crane also supports the Crane Army Ammunition Activity (CAAA), including production and renovation of conventional ammunition, as well as storage, shipment, demilitarization and disposal of conventional ammunition.

The Cast High Explosive/Incinerator Building area is located in the north central part of NSWC as shown on Figure 2-2. Building 146, situated along Highway H-307, was the site for cast loading of explosives into projectiles, pressure washing of five inch projectiles filled with Composition A, and the demilitarization of small arms ammunition by incineration. The building remains active.

Two sumps, measuring 13 feet long by seven feet wide by seven feet deep each, are located at the northeast and northwest corners of the building as shown in Figure 2-3. These sumps, identified as the east and west sumps, are believed to have been used as settling basins fed by the discharge lines from floor drains inside the building. Wastewater generated prior to 1978 was discharged to a storm drain, released to a ditch, and ultimately to Boggs Creek.

2.2 ENVIRONMENTAL SETTING

The topography of NSWC Crane consists of flat to gently rolling terrain dissected by numerous well-defined drainage ways. Surface elevation ranges from approximately 470 feet at the drain exiting the southern boundary of Crane to 860 feet on a ridge in the west-central portion of the facility. Ridge crests generally lie at an elevation of 750 to 800 feet (NEESA, 1983).

The surface drainage at NSWC Crane has formed a dense, dendritic pattern throughout the installation. Four drainage basins have been identified at Crane. SWMU 16/16 is located in Basin IV which occupies the central portion of the facility. All surface drainage from the NSWC empties into the East Fork of the White River south of the installation (NEESA, 1983).

NSWC Crane is underlain by unconsolidated deposits of Quaternary (Pleistocene) age and residual soil derived from Pennsylvanian and Mississippian bedrock. The unconsolidated deposits are limited to the small flood plains and are composed of alluvial, colluvial and paludal (marshland) silt, sand, and gravel; lacustrine clay, silt, and sand; and outwash plain gravel, sand and silt. The remainder of NSWC Crane surficial deposits consist of residual clays and silt from the Pennsylvanian Raccoon Creek Group and Mississippian Stephensport and West Baden Groups, with small areas of Quaternary clay, silt and sand (Lacustrine deposits). The bedrock units beneath the facility, primarily Raccoon Creek and Stephensport Groups, reportedly dip gently from the Cincinnati Arch to the Illinois Basin in the southwest (NEESA, 1983).

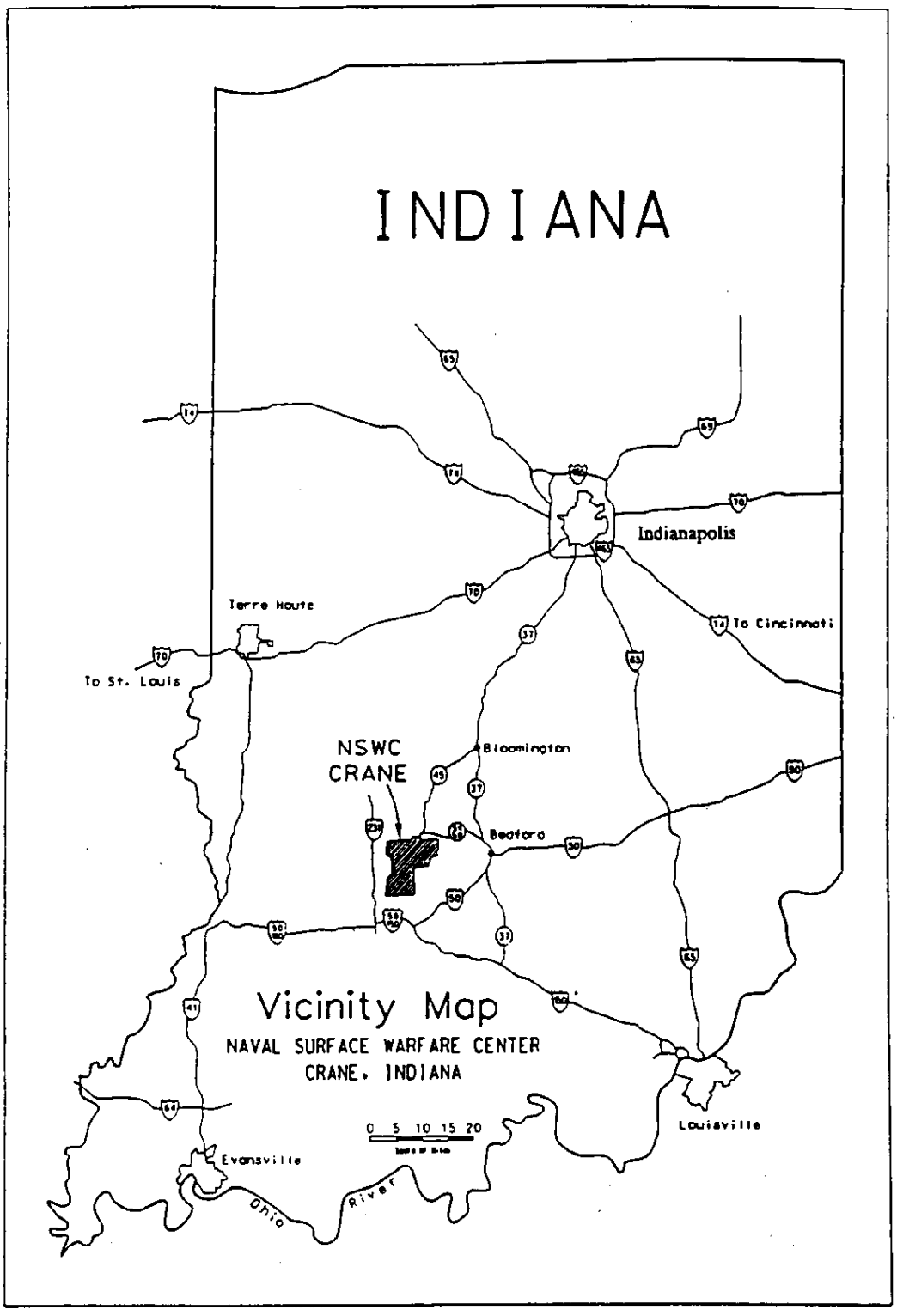

FIGURE 2-1
VICINITY MAP OF NSWC CRANE

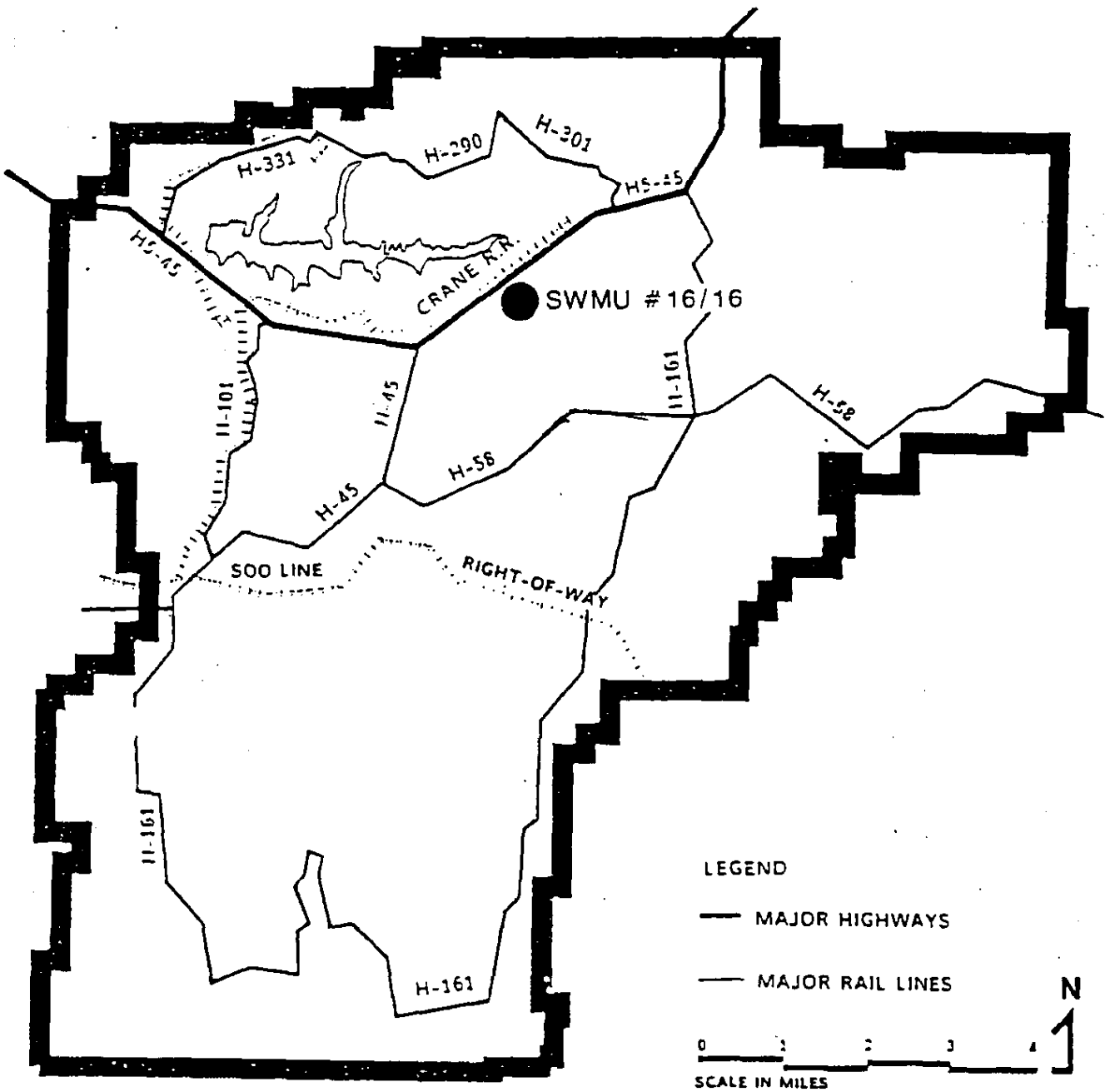

SWMU #16/16: CAST HIGH EXPLOSIVE FILL/INCINERATOR BLDG. 146

FIGURE 2-2
LOCATION OF SOLID WASTE MANAGEMENT UNIT 16/16

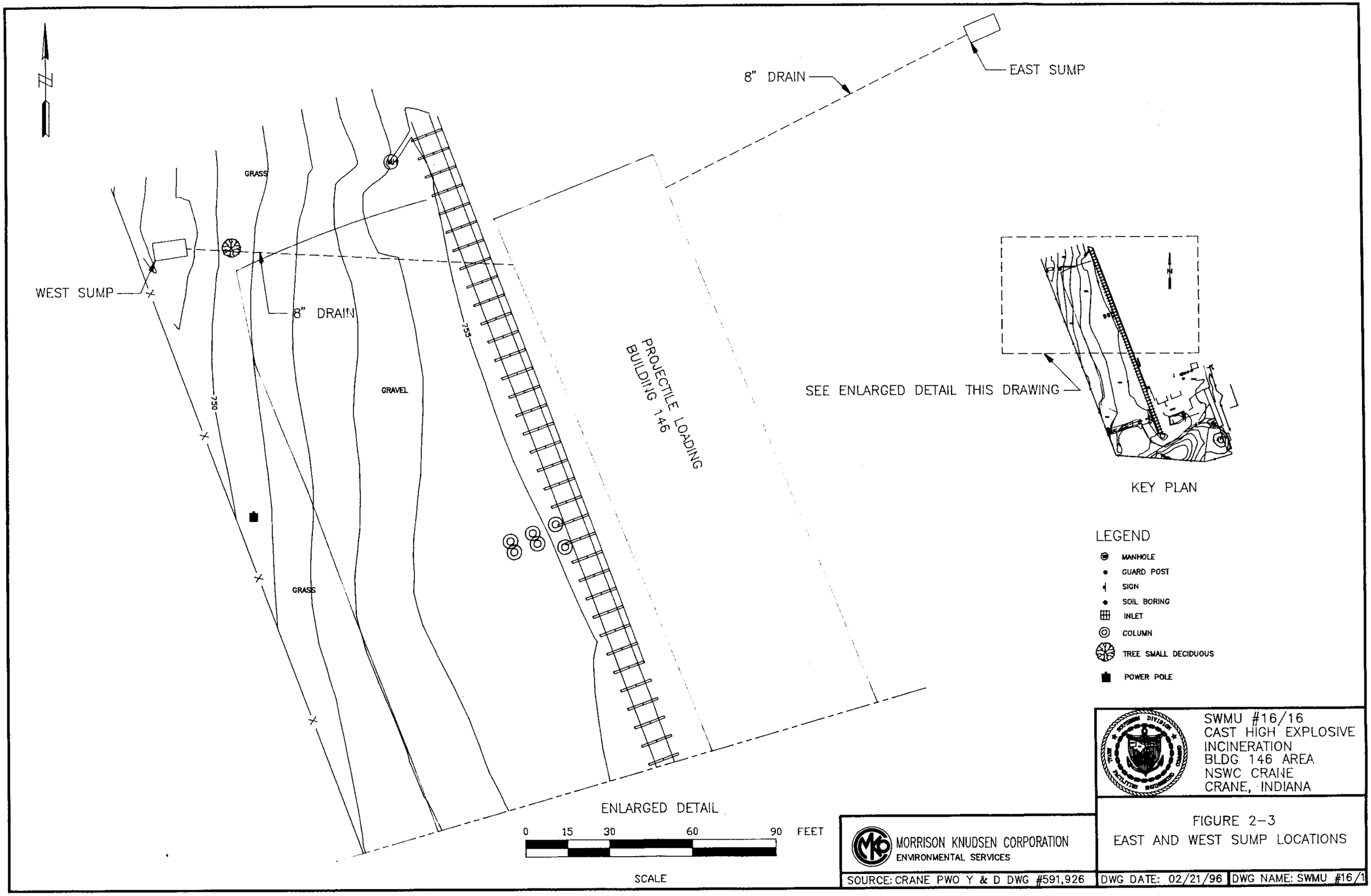
N
8" DRAIN
EAST SUMP
WEST SUMP
8" DRAIN
GRASS
GRAVEL
GRASS
750
755
MH
PROJECTILE LOADING BUILDING 146
SEE ENLARGED DETAIL THIS DRAWING
KEY PLAN
LEGEND
MANHOLE
GUARD POST
SIGN
SOIL BORING
INLET
COLUMN
TREE SMALL DECIDUOUS
POWER POLE
ENLARGED DETAIL
0 15 30 60 90 FEET
SCALE
MORRISON KNUDSEN CORPORATION
ENVIRONMENTAL SERVICES
SWMU #16/16
CAST HIGH EXPLOSIVE
INCINERATION
BLDG 146 AREA
NSWC CRANE
CRANE, INDIANA
FIGURE 2-3
EAST AND WEST SUMP LOCATIONS
SOURCE: CRANE PWO Y & D DWG #591,926
DWG DATE: 02/21/96
DWG NAME: SWMU #16/1

3.0
WORK EXECUTION

3.1 SITE CHARACTERIZATION

Prior to work being performed at SWMU 16/16, characterization samples were collected from the sumps. The characterization samples were collected to determine contaminant concentrations and evaluate disposal options. Appendix D contains three tables summarizing the samples collected and analyzed within the sumps and one table that summarizes Geoprobe soil sampling: Table 1, Sample Collection Summary, identifies all samples collected during this interim measure and the analytical methods performed on the samples; Table 2, Analytical Results Summary, presents all of the analytes that were detected during analysis; and Table 3, Trip Blank Analytical Results Summary, presents the results of the trip blank samples that were included for cross-contamination inspection; Table 4 Geoprobe Samples, identifies the soil samples collected and summarizes the analytical results. Appendix D also contains graphical representation of contamination levels in the two sumps.

3.1.1 East Sump

Water samples were collected from the east sump while pumping to the west sump (16WS09E, I and 16WS12E, I) prior to and during operation of the air stripper for characterization. These samples were analyzed for volatile organic compounds (VOCs) by CEC in Research Triangle Park, North Carolina. Results of these samples are in Appendix D.

3.1.2 West Sump

Three samples (16/16-069,-085,-086) were collected from west sump from December 1995 to April 1996 and analyzed for VOCs by CEC for characterization. Based on this characterization, it was determined that an air stripper was required to treat the water in both sumps for TCE contamination. Results of these samples are in Appendix D.

3.1.3 Building 146 Dock Sump Samples

In an attempt to characterize and determine the location of the TCE contamination entering the east and west sumps, water samples were collected from the sump under the dock on the south east end of Building 146. These samples (16/WS-20 and 16/WS-21) were analyzed by CEC for TCE contamination. The results were less than the detection levels of 10 μg/l. NSWC Crane personnel also collected a sample from the north end of Building 146. The analytical results from this sample (146-22-05096) showed TCE was detected at 11 μg/l. Results of these samples are in Appendix D.

3.2 WATER TREATMENT

Due to the elevated concentrations of TCE in the water associated with the east and west sumps, an air stripper was required to treat the effluent prior to discharging to the storm sewer system. The treatment of water from the east and west sumps was considered an emergency action. A skid mounted air stripper unit was immediately rented and placed over the west sump to treat the water. An application for construction was submitted to Indiana Department of Environmental Management (IDEM) and the permit was approved by IDEM. A copy of the approved permit is included in Appendix A. The air stripper began operation immediately upon receipt.

The first air stripper obtained was a leased unit and was used until a new unit could be purchased. The new unit was purchased and installed at the site on May 29, 1996. As-built drawings of the air stripper unit are included in Appendix B. Photographs of the first air stripper are included in Appendix C, on page C-3, and those of the second air stripper are on page C-7.

The air stripper unit purchased was a 20 gallon per minute (GPM) NEPCCO skid mounted unit. A Grundfos 1/2 horse power sump pump was installed in the west sump and connected to the skid mounted air stripper. Once water in the sump reached a pre-set elevation or prior to an expected rain, the sump pump would turn on and transfer water from the sump to the air stripper. The water passed through a 50 micron bag filter to trap sediments contained in the water. The water then passed through the TurboTray™ Air Stripper. Air was forced upward through the stripper trays by a 3 horse power blower. Passing air through the water as it falls through a series of trays stripped the VOCs from the water. The VOCs were vented through a stack at the top of the air stripper unit. Once the VOCs were stripped from the water, the water was discharged to the adjacent sanitary sewer. See Appendix B for the air stripper manual and drawings. The air stripper operated from May 2, 1996 to September 26, 1997. It was taken out of commission when the analytical showed consistently low levels of VOC in the untreated water, the sumps were plugged, and flows from Building 146 were re-routed to the adjacent sanitary sewer.

Analytical data of the influent and effluent samples are included in Table 2 in Appendix D. Graphs of the influent TCE concentrations are included in Appendix D. Chart 1 presents the influent and effluent results of the west sump. Effluent sample results since April 4, 1997 taken from the west sump were below the detection limit of 10 μg/l of TCE. Prior to that date, five effluent sample results were recorded at levels greater than 10 μg/l of TCE with the highest reading at 22 μg/l.

Influent concentration levels of TCE varied throughout the air stripper operation, however a general trend of decreasing concentrations can be seen in chart 2. From May of 1996 to January of 1997 the average influent TCE concentration into the west sump was 70.5 μg/l This average decreased significantly to an influent TCE concentration of 14.1μg/l between February 1997 and September 1997. Chart 2 presents the influent TCE levels of both the east sump and the west sump. The influent of the west sump ranged from 4 to 270 μg/l and the influent of the east sump ranged from 1 to 190 μg/l. The average for both sumps was 33.8 μg/l. Although rainfall could be expected to have a direct influence on the concentration of TCE, the data do not show a direct correlation.

A total of 900,425 gallons of water was treated by the air stripper during May 2, 1996 through September 26, 1997. During treatment, samples were collected during periods of high and low daily flows. During both periods, analytical results showed both relatively high and low concentrations of TCE.

3.2.1 Overflow Events

Prior to the installation of the air stripper unit over the west sump, overflows of the sump were a common event during rain events. Once the air stripper unit was installed, these overflow events were greatly reduced, however, occasional overflows still occurred when the influent flow rate from a heavy rain event was larger than the capacity of the air stripper. When an overflow was discovered, the water within the west sump was pumped directly to the adjacent sanitary sewer for treatment at the facility's water treatment plant. Samples collected by MK and NSWC Crane personnel of the overflow events were collected and analyzed for TCE. These samples are represented in Appendix D. Also, one overflow event occurred due to stripper malfunction. On March 15, 1997, the air stripper blower fan motor malfunctioned and burnt out which caused the air stripper to shut down. A small overflow occurred. The water within the sump was pumped directly to the adjacent sanitary sewer for treatment. Water samples were collected as a result of this overflow event and were analyzed for TCE. Results of the water samples collected are included in Appendix D.

As a result of these overflows and the possibility of additional overflows, MK began 24 hour surveillance of the stripper unit. Additional equipment was stored on site including a submersible pump, discharge piping, spare blower motor, miscellaneous electrical parts, and a gas powered generator in case of power outages. Also two 500 gallon tanks and one 1,000 gallon tank were stored on the site to collect water from the sump if an overflow event was anticipated.

As a result of overflows prior to and during the operation of the air stripper unit, possible further

investigation may be required to determine if potential ground surface contamination occurred during these events.

3.2.2 East Sump

The TCE-contaminated water in the east sump was pumped into the west sump when the water level in the east sump reached a pre-set level or in anticipation of precipitation. The water was then processed through the air stripper system and discharged into the sanitary sewer. Influent and effluent samples were collected during transfer of water from the east sump to the west sump. Sample results are included in Appendix D.

3.2.3 West Sump

The TCE-contaminated water in the west sump was treated by the air stripper when overflow events were anticipated and as described in section 3.2. After treatment it was discharged into the adjacent sanitary sewer. Influent and effluent samples were collected during stripper operations from May, 1996 to September, 1997. Sample results are included in Appendix D. Effluent sample results since April 4, 1997 taken from the west sump were below the detection limit of 10 μg/l of TCE. Prior to that date, five effluent sample results were recorded at levels greater than 10 μg/l of TCE with the highest reading at 22 μg/l.

3.3 GEOPROBE SOIL SAMPLING

The primary objective for collecting additional soil samples at SWMU 16/16 was to attempt to identify potential sources of the TCE contamination to the sumps. The soil in the vicinity of the west sump, Building 146 and the tank removal area (removed by others), north of Building 146, were considered potential areas of contaminated with volatile organic compounds (primarily trichloroethylene). Geoprobe sampling equipment was chosen for this sampling event due to the minimal waste material generated during sampling.

The objectives of particular soil borings are as follows. Locations are provided in Figure 3.1

- Sump leakage was suspected as a source of VOCs, therefore, two borings were drilled and sampled next to the west sump to determine if volatile organic compounds were present.

- VOC contamination was suspected along the railroad tracks due to due to waste water drainage from the floor of Building 146 or due to railcar loading/unloading activities. Therefore, four borings were drilled and sampled along the tracks on the west side of Building 146 to determine if volatile organic compounds are present.

- Six borings were drilled along a steam conduit linking Building 146 and the boiler room. Soil samples collected from these borings were tested for volatile organic compounds and total petroleum hydrocarbons (TPH) (three borings nearest the boiler room only) to determine if these constituents are present in the vicinity of the removed underground storage tank and/or if the steam line serves as a migration pathway for volatile organic contaminants.

3.3.1 Summary of Geoprobe Results

Geoprobe soil samples were sent to CEC Laboratory for analysis. The analyses revealed that TCE was was not detected in the soil. The detection limits for the Geoprobe soil samples have been dry weight corrected to account for the moisture present in the samples. Low level concentrations of acetone, methylene chloride, toluene, and diesel range organics were detected in these samples. See Appendix

D, Table 4 for analytical results.

3.4 *PIPING INSTALLATION, RE-ROUTING, AND REPAIR*

In an attempt to reduce the volume of water flowing into the east and west sumps, a smoke test was performed to pinpoint the location of the additional water flowing into the sumps. As a result of the smoke test, the roof drains of Building 146 were re-routed to flow over the adjacent hillside and broken sewer lines were repaired.

3.4.1 Smoke Test

A smoke test was conducted on June 17, 1996 to identify the source of the contaminated water accumulating in the sumps. The test showed that a portion of the water was flowing from A 4" vitrified clay tile sewer pipe running down the center of the building for the purpose of draining floor drains, pipe along both sides of the building foundation beneath the loading dock platform which serve to drain roof drains and interior floor drains, and. These lines were inadvertently referred to as French Drains. All these lines drained to the East and roof drains. The smoke test also revealed a broken sewer line that allowed flow into the inlet pipe of the west sump. However, more water was entering the sumps than could be accounted for, and no definitive source for the contaminated water could be determined. Photographs of the smoke test are included in Appendix C, pages C-4 through C-6, and C-8.

3.4.2 *West Sump Sewer Line*

The broken section of the sewer, which allowed water to enter the west sump inlet, was excavated and satisfactorily repaired in July 1996. Photographs of the broken sewer line excavation and repair are included in Appendix C, pages C-8 through C-15.

3.4.3 Re-routing of Building Roof Drains

To reduce the flow of water entering the east and west sump, the existing Building 146 roof drains connecting to the storm sewer system were temporarily disconnected at the top of the vertical pipes and re-routed to discharge onto the ground. Subsequently, the tops of the vertical pipes were reconnected and a new PVC manifold pipe was added inside the dock. The new roof drain system was routed to the east and to the west of Building 146 with the discharge points over the adjacent hillsides. Rock rip-rap was placed at the outlets to the system on both the east and west ends to prevent erosion. See Figure 3.2 for the new piping layout.

3.4.4 Floor Drain Abandonment

To reduce the possibility of future contamination of the east and west sumps, the existing floor drains from within Building 146 were abandoned in place. The grates were removed, NSWC Crane personnel drilled out the floor drains, and sampled the material underneath. Results of NSWC Crane samples are provided in Appendix D. After sampling, the drains and the drain piping system were plugged with non-shrink grout. This action stopped any water from entering the sumps due to spills or operations within the building.

3.4.5 Sump Pump Installation

Since groundwater and local runoff from precipitation could still accumulate within the east and west sumps, sump pumps were installed. One Hydromatic 3 horse power submersible pump was placed in each sump. The pumps were connected to PVC piping that was routed to an adjacent sanitary sewer manhole. The pumps were set to turn on when the water level in the sumps reached an elevation of approximately 2.5 feet above the outlet piping. See Figure 3.2 for sump pump configuration. This new piping and drain system eliminated the need for the air stripper unit. The air stripper unit was

decommissioned on September 26, 1997. The unit was dismantled and given to the facility.

3.4.6 Excavated Soil

During the excavation of the new roof drain lines and sump pump discharge lines, soil was stockpiled for reuse as backfill. It was identified that this soil could possibly contain PCBs. Two samples (16/WP01, 16/WP02) of the excavated material were collected on September 24, 1997 and analyzed for VOCs, explosives, polychlorinated biphenyls (PCBs), and U.S. EPA Appendix IX metals by CEC. These samples indicated the presence of PCBs in the soil. Data for these two samples are included in Appendix D.

The concentrations of PCBs within the soil samples were found to be 20 ppm and 0.014 ppm, respectively. These results are less than the TSCA regulated levels of 50 ppm but higher than the TSCA clean-up criteria of 1 ppm for sites that do not have certification letters explaining where and how the PCBs were disbursed. A work plan was developed by MK to dispose of this soil [MK, 1998]. The contaminated soil was disposed of in two truckloads to Wayne Disposal, Inc. in Belleville, MI, on April 3 and April 6, 1998. A total of 42.93 tons of soil was hauled to the Wayne facility. Waste characterization reports, manifests, weigh tags, and permits for this disposal are included in Appendix E.

3.5 SITE RESTORATION AND DECONTAMINATION

After Navy concurrence to discontinue use of the air stripper was received, the unit was dismantled and turned over to the NSWC Public Works Department. The skid and surrounding area were decontaminated and the skid was removed. The Navy Resident Officer In Charge of Construction (ROICC) performed a final inspection and the work performed was deemed acceptable. A copy of the final inspection certification is included in Appendix A.

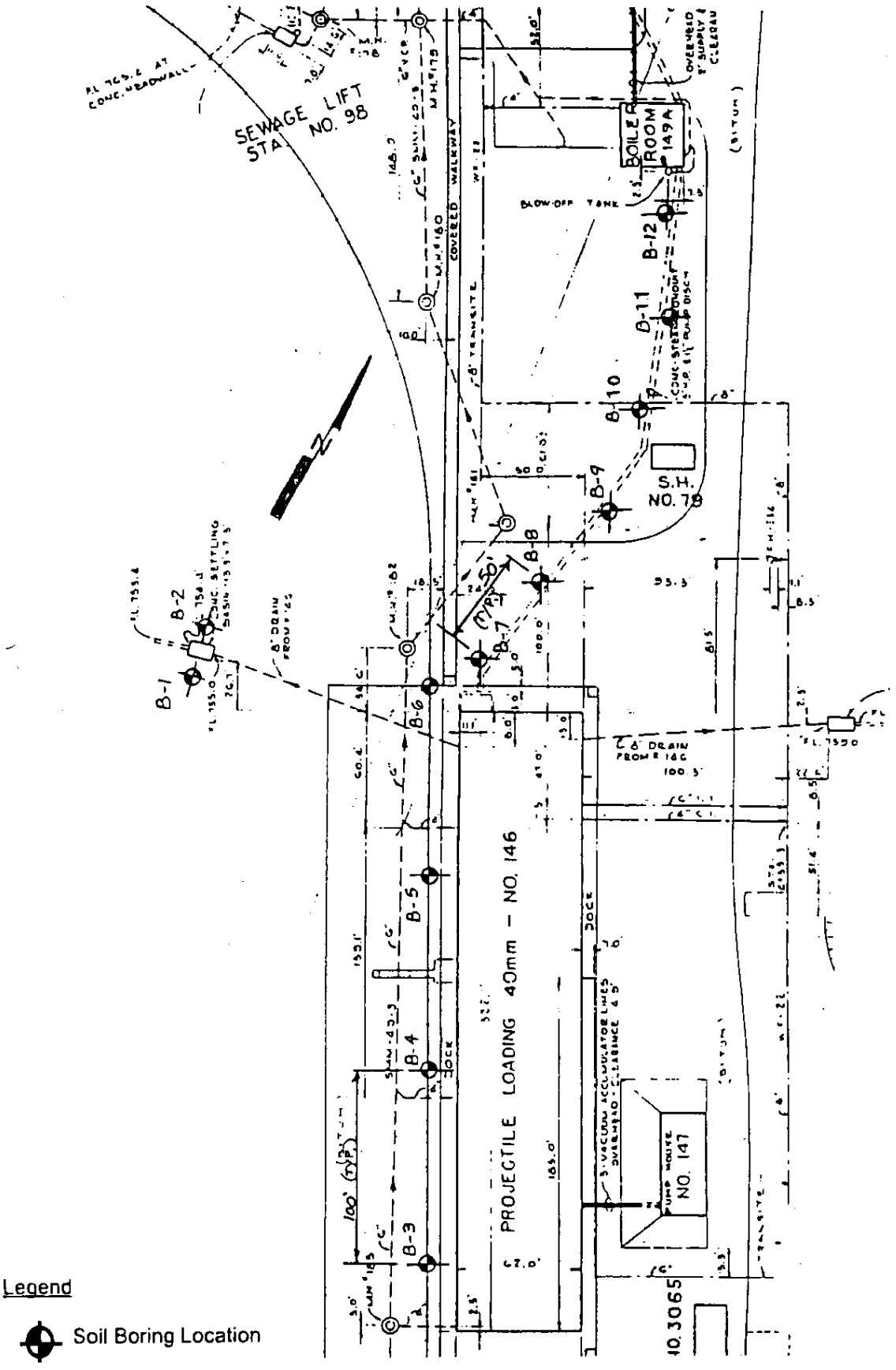

FIGURE 3-1
SOIL BORING LOCATIONS

FIGURE 3-2
REWORKED DRAINS AT BUILDING 146

SYM	DESCRIPTION	PREP'D BY	DATE	APPROVED
A	AS BUILT	[illegible]	[illegible]	[illegible]

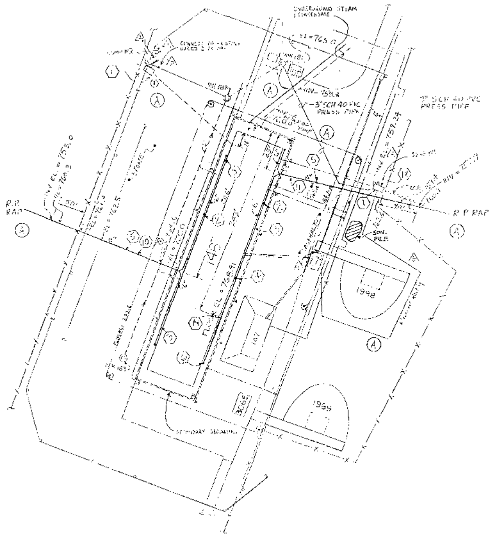

B-146 SITE PLAN

ELECTRICAL NOTES

(A) (1) SUMP #1 & 2. 2 (EA.) SIMPLEX CONTROL PANEL WITH HIGH WATER ALARMS (AUDIO & VISUAL).

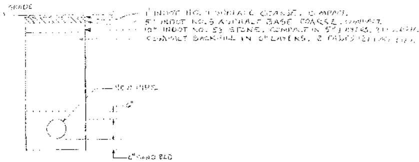

NEW PIPE TRENCH DETAIL (ASPHALT)
N.T.S.

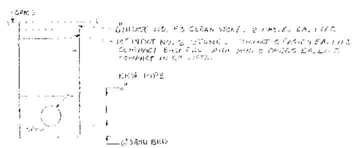

NEW PIPE TRENCH DETAIL (STONE)
N.T.S.

NOTES

1. Existing concrete sump pits.
2. Existing downspouts. TYPICAL.
3. New 6" diameter schedule 40 PVC pipe anchored to the existing reinforced concrete foundation of Building 146. Space anchors in accordance with manufacturers recommendations.
4. Disconnect the existing downspout pipes from the drain (that drains into the existing concrete sumps) on each side of the building under the docks. Connect the downspout pipes to the new 6" diameter PVC pipe under the dock. Plug off the old tees to the drain pipe going to the sumps. TYPICAL.
5. Connect the new 6" diameter schedule 40 PVC pipes to new 8" diameter schedule 40 PVC pipe which drains over the hill. Install 8" PVC pipe approx. 3' deep. See elevations on plan.
6. Reconnect all gutters to downspouts using gutter piping at the Top of the downspout drop. Remove downspout elbow and horizontal pipe. Reuse all downspout drops.
7. ~~Install manholes to reroute drains from floor drains to the sanitary sewer manholes. Plug the ends of the existing 8" storm pipe with concrete grout (at both ends) going to the concrete sumps and abandon in place.~~
8. ~~Install new 8" diameter PVC sanitary sewer pipe from new manhole to existing Manhole No. 181.~~
9. (A) ~~Replace existing floor drain in the steam pit under the dock. Install a new floor drain with a cleanout and trap. Install new 3" diameter PVC pipe from the floor drain to existing Manhole No. 181.~~
10. See trench detail for stone.
11. See trench detail for asphalt.
12. After the two sumps have been cleaned by Gov't ~~[illegible]~~ (A) Abandon existing sump outlet pipes below grade. Plug each end of each sump outlet pipe. USE CONCRETE GROUT TO SEAL UP PIPES. GROUT SHALL BE NON SHRINK.
13. Install a sump pump in Sump #1 and in Sump #2. See Detail. Using schedule 40 PVC pipe connect the new sump pump in Sump #2 to the existing 2.5 inch diameter PVC pipe under ground which drains to Manhole No. 182. Install a 2.5 diameter schedule 40 PVC pipe 3.5 feet deep from Sump #1 to Manhole No. 181. See trench details.
14. Install 2.5 inch diameter schedule 40 PVC pipe to connect to the new 6 inch diameter down spout drain under the dock. The new 2.5 inch PVC pipe shall extend up through an approx. 5 inch hole in the floor of Building 146 to 18 inches above the floor. The top of the pipe shall be anchored to the concrete wall with a pipe anchor. The foundation wall has a 12 inch by 12 inch opening in it to allow the PVC pipe to extend through to above the floor. The end of the pipe above the floor shall be reduced to 1.5 inch diameter and have a McMaster Carr or equal A adapter with female threads installed on it. The Contractor shall supply a McMaster Carr or equal C coupler and a dust cap to fit the A adapter sized for 1.5 inch diameter pipe.
15. Plug up existing floor drains in B-146 with concrete grout.
16. (A) 8" SCH 40 PVC ROOF DRAIN PIPING SURVEY PERFORMED TO ASSURE PROPER SLOPE FOR DRAINAGE.

LEGEND:

- X — PERIMETER FENCE
- E — ELECTRICAL (OVERHEAD)
- A — COMPRESSED AIR
- T — UNDERGROUND TELEPHONE
- RAILROAD
- SEWER
- WATER MAIN
- MANHOLE
- FIRE HYDRANT
- LIGHTNING MAST

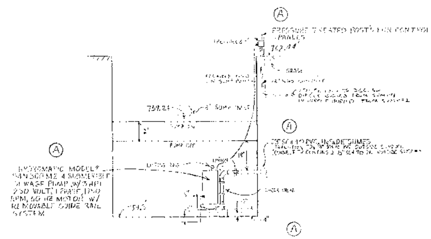

SUMP PUMP DETAIL

SATISFACTORY TO	PWO DWG REF	DEPARTMENT OF THE NAVY — NAVAL FACILITIES ENGINEERING COMMAND
SATISFACTORY TO	PWO DRAWING NO 6523	NAVAL WEAPONS SUPPORT CENTER CRANE, INDIANA
SATISFACTORY TO	DESIGN TR, LW, SPS / DRAWN TR, LW, SPS / CHECKED / SUPV	REWORK DRAINS B-146
	APPROVED: DONE	SIZE F / CODE IDENT NO 80091 / NAVFAC DRAWING NO 5313480 / CONSTR CONTR NO N624
		SCALE AS NOTED / SPEC NO / SHEET 1 OF 1

4.0
FIELD AND LABORATORY DATA QUALITY CONTROL

4.1 DATA QUALITY CONTROL AIR STRIPPER SAMPLES

The data from samples collected by MK during the installation of the air stripper and subsequent monitoring of the sumps at the Cast High Explosive/Incinerator Building 146 have been reviewed to ensure the data quality objectives were achieved. Additional samples were collected by NSWC Crane personnel, copies of the results are included in Appendix D for information, however, this QC review does not include the additional samples collected by NSWC Crane personnel. The data was verified and compared with field and laboratory quality control (QC) sample data to assess the data's usability for supporting closure decisions. The results of this data verification are presented in this section.

The data was verified by reviewing chain-of-custody forms, sample preservation records, analytical holding time, requested turnaround times, sample data in comparison to QC data, and reporting requirements. A summary of the samples collected and methods of analysis are shown in Table 2 in Appendix D. All samples were analyzed for VOCs by Contract Laboratory Program (CLP) Statement of Work (SOW) OLM03.1. A number of samples were also analyzed for metals, diesel range organics, and volatiles by methods SW846(6010), SW846(8015), and SW846(8010), respectively.

Most samples (97%) were received by the laboratory in good condition (i.e., there were no broken containers) and at a recorded temperature of 4°C ± 2°C or below. In three instances, samples were not analyzed because they were not received at acceptable temperatures, or had illegible sample labels. Samples were resampled in these instances.

4.1.1 Field Quality Control

Analytical results for the trip blanks, field blanks, equipment rinsates, and field duplicates were evaluated to identify potential sources of error introduced during sampling, transportation, and storage.

A trip blank was sent in each cooler of samples and analyzed for volatile organic compounds to evaluate the potential for cross-contamination during shipping to the laboratory. The trip blank was received from the laboratory in a sealed container containing organic-free water, held intact at the site, and shipped back to the laboratory with the samples. Low level acetone and methylene chloride were found in several of the trip blanks. Acetone and methylene chloride are common laboratory solvents and are often found at low background levels at many laboratories. These levels were similar to the levels found in the corresponding laboratory method blanks and are likely attributable to laboratory background levels. Trip blank results are summarized in Table 3 in Appendix D.

A field blank sample was evaluated to identify any sources of contamination in the rinse water and/or general atmospheric conditions in the field. Water (from the same source used for sampling equipment decontamination) was poured into appropriate sample containers containing sample preservative as required to verify the water source. There were low concentrations of chloroform and bromodichloromethane in the field blank. These two compounds are commonly found in municipal water and are by-products of the chlorination treatment process. The low concentrations found in the water blanks were not duplicated in the field samples and therefore show no impact on the field sample results.

The equipment rinsate blanks were collected by rinsing decontaminated sampling equipment with deionized water, collecting the rinse water in appropriate sample containers, adding any sample preservative required by the analytical method, and then submitting the rinse water for analysis. Results are used to evaluate the effectiveness of decontamination procedures in preventing sample cross-contamination. Low level concentrations of chloroform and bromodichloromethane were found in the rinse blank. This concentration found is likely attributable to the water used in decontamination since

previous levels of these compounds were also found in the field blank. Based upon these results, it is felt that cross-contamination of the samples through sampling equipment is not a potential concern for the samples collected.

4.1.2 Laboratory Quality Control

The laboratory performed method blank, sample matrix spikes (MS), sample matrix spike duplicates (MSD), surrogates, and laboratory control samples (LCS) analyses to evaluate laboratory accuracy and precision.

Laboratory method blanks were prepared and analyzed with the samples in order to evaluate potential target compounds or interferences from laboratory glassware, reagents and/or solvents used in the preparation and analysis of samples. Some of the laboratory method blanks showed the presence of acetone and methylene chloride at low levels. Acetone and methylene chloride are commonly used laboratory solvents and are often present at low levels in analytical laboratories.

The LCS is a sample prepared in the laboratory consisting of clean water spiked with known amounts of standard analytes which is processed through the same preparation as field samples. The percent recoveries in the LCS gives an indication of analysis accuracy in a clean matrix. The LCS results were acceptable for all of the analytes associated with these samples.

Sample MS/MSD are field samples which have been spiked with a known amount of target analytes and processed through the preparation and analysis with the field samples. Evaluation of the spike recoveries, and the variability between the MS and MSD, gives an indication of analysis accuracy and precision in the sample matrix. MS/MSD accuracy and precision can be affected by concentrations of both target and non-target compounds present in the original field sample, as well as the matrix of the sample itself. Percent recoveries for most sets of MS/MSD analyses were acceptable, except for 1,1-dichloroethylene which was slightly low in three of the sixty-three analytical batches. Matrix spike recoveries for 1,1-dichloroethylene in the three batches were between 46% and 66%. The corresponding LCS accuracy results were acceptable for the three analytical batches and all other spiked compounds were within acceptable limits. There were no concentrations above the level of quantitation for 1,1-dichloroethylene in any of these three lots, and therefore, based upon the results of the LCS, surrogates, and other spike compound, it is felt that this data is acceptable.

Surrogate spikes are known amounts of non-target compounds which are spiked into all samples prior to sample preparation in order to evaluate the efficiency of the sample preparation and analysis. Surrogate recoveries were acceptable.

The data is felt to be acceptable to support the monitoring of the contaminated sumps at this site. The QC data demonstrate acceptable accuracy and precision when compared to the data quality objectives, and therefore should be considered usable to support closure decisions.

4.2 DATA QUALITY CONTROL GEOPROBE SAMPLES

The data from Geoprobe soil samples collected in the Cast High Explosive/Incinerator Building 146 area have also been reviewed to ensure the data quality objectives were achieved. The data was verified and compared with field and laboratory quality control (QC) sample data to assess the data's usability for supporting closure decisions. The results of this data verification are presented in this section.

The data was verified in the same manner as was the water samples' data. A summary of the data obtained from these samples is presented in Table 5 in Appendix D. All samples were analyzed for VOCs by CLP SOW OLM03.1. Three samples were additionally analyzed for diesel range organics by method SW-846 8015.

All samples were received by the laboratory in good condition and at an acceptable recorded

temperature of 2°C.

4.2.1 Field Quality Control

Analytical results for the trip blanks, field blanks, and equipment rinsates were evaluated to identify potential sources of error introduced during sampling, transportation, and storage. See section 4.1.1 for descriptions of these QC sample types.

A trip blank was sent in the cooler with the samples and analyzed for VOCs to evaluate the potential for cross-contamination during shipment to the laboratory. No target analytes were detected above the reporting limit in the trip blank.

Results from two field blanks and two rinse blanks were evaluated. Low-level concentrations, between 1 and 17 parts per billion (ppb), of bromodichloromethane and chloroform were detected in the field blanks and/or the rinse blanks. These two compounds are commonly found in municipal water and are by-products of the chlorination treatment process. The low concentrations found in the water blanks were not duplicated in the field samples and therefore show no impact on the field sample results. Low-level concentrations of diesel range organics were detected below the reporting limit of 1 part per million (ppm) in both field blanks and rinse blanks, at levels similar to the background level detected in the corresponding method blank. Therefore, field data is not adversely impacted. Acetone was detected in one field blank, and in both rinse blanks, at levels between 18 and 27 ppb. Corresponding field samples show concentrations of acetone between 28 and 2400 ppb. Based on non-detection of acetone in method blanks, these levels are not necessarily attributed to laboratory background levels.

4.2.2 Laboratory Quality Control

The laboratory performed method blank, MS/MSD, surrogate spikes, and LCS analyses in order to evaluate laboratory accuracy and precision. See section 4.1.2 for descriptions of these QC sample types.

Laboratory method blanks analyzed for volatile compounds did not indicate the presence of any target analytes, either above or below the reporting limits. Laboratory method blanks analyzed for diesel range organics showed low-level concentrations estimated below the reporting limits, and similar to levels estimated in corresponding field samples and field quality control samples. For this reason, background levels of DRO in the laboratory may contribute to positive DRO concentrations reported for this round of sampling.

LCS and surrogate spike recoveries were acceptable for all spiked analytes.

MS/MSD recoveries, and precision between recoveries, were acceptable for all spiked target analytes.

4.3 DATA QUALITY CONTROL WASTE PILE SAMPLES

The data from waste pile samples collected in the Cast High Explosive/Incinerator Building 146 area has been reviewed to ensure the data quality objectives were achieved. The data was verified and compared with field and laboratory quality control (QC) sample data to assess the data's usability for supporting disposal characterization. The results of this data verification are presented in this section.

The data was verified in the same manner as was the water samples' data. A summary of the data obtained from these samples is presented in Table 5 in Appendix D. All samples were analyzed for PCBs, U.S. EPA Appendix IX list metals, explosives, and trichloroethylene by SW-846 methods 8081, 6010/7470, 8330, and 8260, respectively. In addition, these two samples were analyzed for TCLP lead using the SW-846 prep method 1311, and the analysis method SW6010.

All samples were received by the laboratory in good condition and at an acceptable recorded temperature of 2°C.

4.3.1 Field Quality Control

Because these samples were used to characterize a waste pile for disposal, no field quality control samples were collected with these field samples.

4.3.2 Laboratory Quality Control

The laboratory performed method blank, MS/MSD, surrogate spikes, and LCS analyses in order to evaluate laboratory accuracy and precision. See section 4.1.2 for descriptions of these QC sample types.

With two exceptions, laboratory method blanks analyzed with these disposal samples did not indicate the presence of any target analytes above the reporting limits. Total lead was detected at .472 mg/kg in the metals preparation blank. However, because lead was reported in the field samples at levels at least twenty times greater than this background amount, the analysis of the field samples is not adversely impacted. The method blank analyzed with the explosives sample fractions indicated the presence of 135TNB below the reporting limit. Corresponding field samples have been flagged with a "B" code by the laboratory. The levels of 135TNB in the waste pile samples were similar to the levels found in the corresponding laboratory method blank and are likely attributable to laboratory contamination.

Surrogate spike recoveries were acceptable for all spiked analytes. Although PCB surrogates were outside of laboratory criteria for 16/WP01, this was due to dilution necessary to bring target analytes into calibration range, and does not adversely affect data as reported.

LCS recoveries were acceptable for all spiked target analytes.

MS/MSD recoveries, and precision between recoveries, were acceptable for the majority of spiked target analytes. Exceptions include antimony and several of the explosive compounds. Antimony showed recoveries of 30.9% and 29.3%, although it had an acceptable recovery in the post-digest spiked sample; for this reason, antimony was flagged with an "N" code by the laboratory, indicating the presence of a matrix-related interference. Although RDX, 2ADNT, 4ADNT, 2NT, 3NT, and 4NT showed high recoveries in the explosive MS and MSD, sample data is not adversely affected because none of these analytes were detected above the reporting limits.

Replicate samples were performed for both the total metals analysis and for the TCLP lead analysis, and precision was acceptable for the majority of analytes. Zinc showed a result of 38.7 relative percent difference (RPD), and for this reason, zinc was flagged with a "*" code by the laboratory, indicating a non-homogenous sample matrix. Zinc was also flagged with an "E" code by the laboratory, indicating that the values should be considered estimated due to a chemical or physical interference. This "E" flag is the result of an RPD outside of laboratory criteria between the sample and its serial dilution.

With few qualifications, the QC data demonstrate acceptable accuracy and precision when compared to the data quality objectives. Therefore, the data is considered acceptable to support the characterization of the waste pile for disposal.

5.0
SUMMARY AND CONCLUSIONS

MK collected characterization samples from the sumps associated with the Cast High Explosive/Incinerator Building 146 area (SWMU 16/16). The results indicated that water draining into both the east and west sumps at Building 146 contained trichloroethylene. An air stripper was purchased and installed to treat this water. The unit treated 900,425 gallons of water from May 1996 to September 1997. Upon completion of treatment, the air stripper was dismantled and turned over to the Navy.

To further characterize the site, Geoprobe soils samples were collected from areas west of Building 146, near the west sump, and along a steam line running from the boiler room to Building 146. Soil samples obtained from the investigation were tested for TCE contamination. The analysis revealed that levels of TCE in the soil was not detected. The detection limits for the Geoprobe soil samples have been dry weight corrected to account for the moisture present in the samples.

A smoke test was conducted on June 17, 1996 to identify the source of the contaminated water accumulating in the sumps. The test showed that a portion of the water was flowing from tile running underneath Building 146, floor drains from within Building 146, and roof drains. The smoke test also revealed a broken sewer line that connected to the inlet of the west sump. No definitive source for the contaminated water could be determined.

To reduce the flow of water entering the east and west sump, the existing Building 146 roof drains connecting to the sumps were disconnected and re-routed. To reduce the possibility of future contamination of the east and west sumps, the existing floor drains from within Building 146 were abandoned in place. New piping was installed in August and September of 1997, connecting the east and west sumps directly to the sanitary sewer system. As a result of this, the air stripper was no longer needed and was shut down and dismantled on September 26, 1997. The air stripper unit was then turned over to the Navy.

Soil excavated during installation of the new piping was sampled in September 1997 and found to contain low levels of PCBs. This contaminated soil was shipped to an off-site disposal facility for treatment in April 1998.

Based on the performance of the air stripper unit, the Geoprobe soil sampling event, the re-work of the existing drainage system, the sampling and analytical results, and the NSWC Crane acceptance of the physical work, the work performed at SWMU 16/16 under Delivery Order #0027 meets the requirements and objectives of the Interim Measures Cleanup Activities. However, further site investigations is warranted in the future to pinpoint the exact location of the TCE and PCB contamination. Also further investigation along the hillside adjacent to the west sump is warranted based on overflows that occurred before and during the air stripper operations.

6.0
REFERENCES AND BIBLIOGRAPHY

REFERENCES

MK, 1997. *Interim Measures Report, SWMU 16/16 Cast High Explosive / Incinerator Building 146, Naval Surface Warfare Center Crane, Crane, Indiana*, Draft, February 1997.

MK, 1998. *Work Plan for Transportation and Disposal of Contaminated Soil, SWMU #16/16, NSWC Crane, Crane, Indiana*, March 6, 1998.

NEESA, 1983. *Initial Assessment Study of Naval Weapons Support Center Crane, Indiana.* Naval Energy and Environmental Support Activity, 13-003, May 1983.

U.S. EPA, 1994. *Drinking Water Regulations and Health Advisories*, U.S. Environmental Protection Agency, October, 1996.

BIBLIOGRAPHY

MK, 1995a. *Work Plan and Site Specific Health and Safety Plan for Interim Measures Cleanup at Solid Waste Management Units #16/16 and 24/00,* Revision B, as amended, dated August 18, 1995.

MK, 1995b. *Quality Control Plan for Interim Measures Cleanup, NSWC Crane, Crane, Indiana*, Revision C, August 18, 1995.

MK, 1995c. *Quality Assurance Project Plan for RCRA Corrective Action Interim Measures Cleanup, NSWC Crane, Crane, Indiana,* Revision C, December 29, 1995.

MK, 1995d. *Waste Management Plan for Interim Measures Cleanup, NSWC Crane, Crane, Indiana*, Revision C, August 18, 1995.

MK, 1995e. *Sampling and Analysis Plan for Interim Measures Cleanup, NSWC Crane, Crane, Indiana*, Revision C, August 18, 1995.

MK, 1995f. *Environmental Protection Plan Interim Measures Cleanup, NSWC Crane, Crane, Indiana,* Revision C, August 18, 1995.

U.S. EPA, 1986. *Test Methods for Evaluating Solid Waste, SW 846*, U.S. Environmental Protection Agency.

APPENDIX A

APPROVALS, PERMITS AND REGULATORY INFORMATION

APPROVALS, PERMITS AND REGULATORY INFORMATION

IDEM Permit Approval No. 2493 . . . . . 4 pages
Final Inspection and Acceptance . . . . . 3 pages
Notice of Appeal Rights . . . . . 1 pages
Statement of Work for Drain Rework . . . . . 5 pages
Memorandum, Permit for Air Stripper Operation . . . . . 1 pages
Authorization to Proceed with Smoke Test . . . . . 1 pages

INDIANA DEPARTMENT OF ENVIRONMENTAL MANAGEMENT
We make Indiana a cleaner, healthier place to live

Evan Bayh
Governor
Kathy Prosser
Commissioner

100 North Senate Avenue
P.O. Box 6015
Indianapolis, Indiana 46206-6015
Telephone 317-232-8603
Environmental Helpline 1-800-451-6027

May 2, 1996

VIA CERTIFIED MAIL Z 411 847 179

Commander
Code 095, NAVSURFWARCENDIV
300 Highway 361
Crane, Indiana 47522-5001

Dear Applicant:

Re: 327 IAC Article 3 Construction
Permit Application
Plans and Specifications for
B-146 Air Stripper
Naval Surface Warfare Center
Permit Approval No. 2493
Crane, Indiana

The application, plans and specifications, and supporting documents for the above-referenced project have been reviewed and processed in accordance with rules adopted under 327 IAC Article 3. Enclosed is the Construction Permit (Approval No. 2493), which applies to the construction of the above-referenced proposed water pollution treatment/control facility to be located at B-146 at Crane Division, Naval Surface Warfare Center in Crane, Indiana.

Please review the enclosed permit carefully and become familiar with its terms and conditions. In addition, it is imperative that the applicant, consulting architect/engineer (A/E), inspector, and contractor are aware of these terms and conditions.

It should be noted that any person affected or aggrieved by the agency's decision in authorizing the construction of the above-referenced facility may, within fifteen (15) days from date of mailing, appeal by filing a request with the Office of Environmental Adjudication for an adjudicatory hearing in accordance with IC 4-21.5-3-7 and IC 13-7-10-2.5. The procedure for appeal is outlined in more detail in Part III of the attached construction permit.

Plans and specifications were prepared by Morris Knudsen Corporation, and submitted for review on April 26, 1996.

WATER POLLUTION TREATMENT/CONTROL FACILITY DESCRIPTION

Presently, the wastewater that is being treated is comprised of vadose zone ground water and rain water runoff that is flowing into an old settling basin located near Building 146. As a condition of the corrective action plan in their RCRA Part B Permit, Naval Surface Warfare Center is required to make an environmental assessment of this area. In performing the assessment, it was discovered that the water which flows into the basin contains trichloroethylene in concentrations from 50 ppb up to 1,200 ppb.

In order to ensure that hazardous water is not discharged to the environment, Crane Division, Naval Surface Warfare Center proposed to install a TurboTray Low Profile Air Stripper in the referenced project to strip the trichloroethylene from the water. The treated water will then be discharged to the Naval Surface Warfare Center's existing sanitary sewer system.

CONDITIONS AND LIMITATIONS TO THE AUTHORIZATION FOR CONSTRUCTION OF WATER POLLUTION TREATMENT/CONTROL FACILITY

During the period beginning on the effective date of this permit and extending until the expiration date, the permittee is authorized to construct the above described water pollution treatment/control facility. Such construction shall conform to all provisions of State Rule 327 IAC Article 3 and the following specific provisions:

PART I

SPECIFIC CONDITIONS AND LIMITATIONS TO THE CONSTRUCTION PERMIT

Unless specific authorization is otherwise provided under the permit, the permittee shall comply with the following conditions:

1. All local permits shall be obtained before construction is begun on this project.

2. If pollution or nuisance conditions are created, immediate corrective action will be taken by the permittee.

3. Plans for construction in a floodway must be submitted to the Department of Natural Resources for consideration of approval prior to the start of construction.

4. Additional treatment facilities will be installed if the proposed facilities fail to provide adequate control or if necessary for compliance with more stringent Federal or State pretreatment standards or requirements promulgated subsequent to the date of this approval.

PART II

GENERAL CONDITIONS

1. No significant or material changes in the scope of the plans or construction of this project shall be made unless the following provisions are met:

   a. Request for permit modification is made 60 days in advance of the proposed significant or material changes in the scope of the plans or construction;

   b. Submit a detailed statement of such proposed changes;

   c. Submit revised plans and specifications including a revised design summary; and

   d. Obtain a revised construction permit from this agency.

2. This permit may be modified, suspended, or revoked for cause including, but not limited to the following:

   a. Violation of any term or conditions of this permit;

   b. Obtaining this permit by misrepresentation or failure to disclose fully all relevant facts.

3. Nothing herein shall be construed as guaranteeing that the proposed water pollution treatment/control facility shall meet standards, limitations or requirements of this or any other agency of state or federal government, as this agency has no direct control over the actual construction and/or operation of the proposed project.

Any questions concerning this permit may be addressed to Mr. Levy Soliven, of our staff, at 317/232-8658. Legal questions or questions concerning appeal procedures should be addressed to the Office of Legal Counsel, at 317/232-8493.

Sincerely,

Kenneth A. Lee

Kenneth A. Lee, Chief
Facility Construction Section
Office of Water Management

LS/cd
Project No. F-8788
Enclosures
cc: Martin County Health Department
Martin County Commissioner
Morris Knudsen Corporation

MORRISON KNUDSEN CORPORATION
ENGINEERING, CONSTRUCTION & ENVIRONMENTAL GROUP
NSWC CTR 12
300 HIGHWAY 361
CRANE, IN 47522

RECEIVED
APR 21 1998
MK-CRANE

TRANSMITTAL LETTER

PROJECT NAME: SOUTHDIV ERAC CRANE DIVISION NSWC	TRANSMITTAL NO.: 97-4324-611
	WORK ORDER NO.: 4324-0009-007-3
	DATE: November 14, 1997

TO:
Mr. Brent Robertson
Officer in Charge of Construction (ROICC)
Crane Division, NSWC Bldg. 2516
Crane, IN 47552

REFERENCES

ITEM: Cast High Final Inspection/Acceptance w/Manuals

EQUIPMENT NO.:

PURCHASE ORDER NO.:

VENDOR ORDER NO.:

TRANSMITTED HEREWITH

FOR:
- [ ] REVIEW AND COMMENT
- [X] APPROVAL
- [ ] RECORD
- [ ] INFORMATION

FOR STATUS NOTED

REVIEWED	A
REVIEWED AS NOTED - RESUBMIT	B
NOT REVIEWED - RESUBMIT	C
FOR INFORMATION	D

ITEM	QUANTITY	TITLE/DESCRIPTION
1	1	Please **SIGN** and **return** the attached Final Inspection and Acceptance of Cas High Pipe Rerouting Memo dated October 24, 1997.
2	6	Also attached is: Stripper Manual, Pump Manual for Stripper, Sump Pump ma Control Box/Alarm Manual, Electrical Data, and As-Builts drawings/specs.

File: 11.074.F (T/L)
17.090.03.F

BY: D Beall

NAME: Dave Beall

TITLE: Project Manager

MORRISON KNUDSEN CORPORATION

300 HIGHWAY 361, CTR-12
P.O. BOX 310
CRANE, INDIANA 47522
(812) 854-6941
FAX: (812) 854-6944

MEMO

To:	File
From:	Dave Beall
Subject:	Final Inspection and Acceptance of Cast High Pipe Rerouting
Date:	October 24, 1997
Correspondence No.:	219

The final inspection for the Cast High Pipe Rerouting for the physical work completed at Bldg. 146 was conducted on 10/24/97. The completed physical work was accepted by the ROICC on 10/24/97 establishing the beneficial date.

MORRISON KNUDSEN CORPORATION

Signature D Beall Date 11/14/97
Signature [illegible] Date 10/24/97

ROICC

Signature [illegible] Date 4/23/98
Signature _____ Date _____

cc: PMO ROICC EPD
File: 11.020.F 17.090.03.F

RECEIVED

OCT 24 1997

MK-CRANE

Fax #: (___) ____-_____

To: Dave Beall Phone: (___) ____-_____

Company or Code: MK

From: Brent Robertson Phone: (812) 854-_____

OIC NAVFAC CONTRACTS
NSWC, CRANE, INDIANA
Fax #: (812) 854-3800

COMMENTS: Since the B-146 Sump pumps are now fully operational it is now permisable to suspend 24 hr Monitoring. Please check each sump on 10/25 + 10/26 to assure proper function of pumps. I will follow up formally at a later date,

Total # of Pages (includes cover)_____

RECEIVED
MAY 07 1996
MK-CRANE

NOTICE OF APPEAL RIGHTS

The Indiana Department of Environmental Management is notifying you of the Commissioner's decision regarding the issuance of the attached permit. This is being done because the applicant for the permit listed you as a person or party who may be potentially affected by the issuance of the permit.

Indiana law gives potentially affected persons or parties certain appeal rights. These appeal rights, including the required time limitation and procedures for exercising them, are set out in more detail in the cover letter and Part III of the permit.

Please read the foregoing information carefully so that you may become aware of your rights in this matter.

NSWC - CRANE 4324-0009	ACT	INFO	INIT
PROJECT MANAGER			
PROJECT MANAGER			
PROJECT ENGINEER			
GNL SUPT			
SAFETY AND HEALTH			
QA/QC SUPERVISOR			
PROJECT CONTROLS			
FIELD ENGINEERING			
PMO CHARLESTON			
FILE			
FILE			
FILE			

STATEMENT OF WORK

May 27, 1997

PROJECT TITLE - Rework Drains at Bldg. 146

TASK ORDER NUMBER - 0028

STATUS OF THIS WORK STATEMENT - Preliminary (Prior to Negotiations)

PART 1 - INTRODUCTION

1.1 This task order sets forth the effort for the JOC Contractor to reroute existing roof drains; ~~replace existing floor drain in the steam pit on the north side of Bldg. 146 and install new 3" PVC drain to Manhole No. 181;~~ install 2 each new sump pumps and all other work tasks depicted on PW Drawing No. 6523.

WORK SC
DELETED
6/6/

1.2 The following attached drawings/exhibits apply to this task order:

PW Drawing No. 6523
Exhibit "A" - Quick Connect Hose couplings

1.3 All operation practices of the Contractor, workmanship, materials, equipment and articles used in the performance of the work hereunder, shall be in accordance with the Job Order Contract No. 68950-D-0030, prevailing industry standards and the Naval Facilities Engineering Command Guide Specifications (NFGS).

1.4 All demoed items shall become property of the contractor unless otherwise specified.

PART 2 - WORK EXECUTION

2.1 On the east and west side of Bldg. 146, the contractor shall disconnect the existing downspouts from the vertical sheetmetal downspouts and reconnect them to the existing Cast Iron downspouts. Abandon the existing sheetmetal downspouts in place. The existing C.I. downspouts shall be disconnected from the existing C.I. horizontal run under the concrete dock (abandon in place) and reconnected to a new 6" Schedule 40, PVC main as depicted on PW Drawing 6523. This new 6" PVC main shall be anchored to the existing concrete structure underneath the existing docks per manufacturer's recommendations.

JUN 1997
RECEIVED
CENTENNIAL
CONTRACTS

2.2 Each new 6" Schedule 40 PVC main shall be sloped to a new 8" schedule 40 PVC main (2 each) which drains to the ground surface as depicted on PW drawing No. 6523. Provide 1 CY of RipRap at each location.

2.3 The contractor shall install a new sump pump in sump pit no. 1 and install a new PVC main to Manhole No. 181 as depicted on the Sump pump detail on PW Drawing No. 6523. This will require demolition of existing asphalt and patching with new.

2.4 The contractor shall install a new sump pump in sump pit no. 2 and tie the effluent side into the existing force main running to Manhole No. 188 as depicted on PW Drawing No. 6523.

2.5 The government will clean the existing sump pits. The contractor shall abandon the existing sump outlet pipes in place and plug each below grade with a non shrink grout.

WORKSCOPE DELETED 6/6/97

2.6 On the north end of building 169 the contractor shall replace the existing floor drain in the steam pit with a new floor drain w/ cleanout & trap. Install a new 3" schedule 40 PVC drain pipe from the floor drain to Manhole No. 181. This will require demolition of existing asphalt and patching with new.

2.7 Contractor shall seed and mulch any bare earth area after excavation.

2.8 Contractor shall concrete grout exist. floor drains in Bldg. 146.

2.9 Contractor shall install a McMaster Carr or equal A adapter, C coupler, and dust cap as described in note no. 14 of PW Drawing No. 6523.

PART 3 - SPECIAL CONSIDERATIONS

3.1 Submittals required:
Sump Pump
Sump Pump mechanical/electrical controls
Floor drain w/cleanout & trap

3.2 Environmental concerns:
Remove temporary plugs on the sump discharge and permanently patch to prevent waters from flowing into the nearby streams.

3.3 Use of Division 1 items:
Surveying shall be performed to insure proper drain pipe slope.

3.4 Assumptions:
Existing asphalt thickness does not exceed is 6 inches.

3.5 Special Quality Control Requirements:
None

JUN 1997 RECEIVED COMMERCIAL CONTRACTORS

3.6 Special scheduling.
None

3.7 Special Conditions:
Contractor shall verify all quantities listed herein, prior to task order award.

3.8 Post award point of contacts:
Unknown at this time

JUN 1997

Quick Connect Hose Couplings

Instant-Lok Couplings

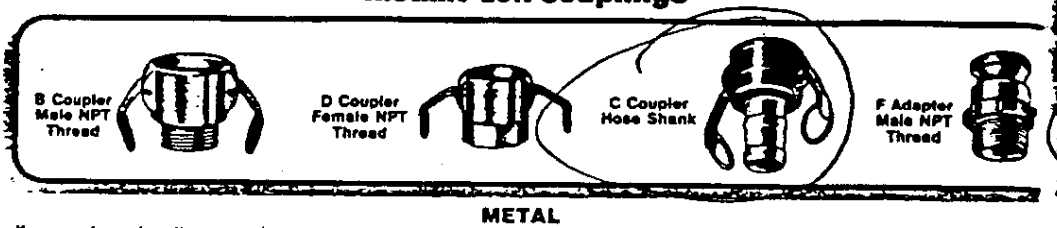

METAL

You can depend on these couplers to provide quick liquid and material hose connections that seal tight and stay tight! Excellent for use with single connections and where changes in connection to a number of tanks or outlets may be required. Manufactured to meet MIL-C-27487 specifications. Couplings are interchangeable with all other couplings meeting this government standard.

Couplings feature heavy-duty construction. They consist of a coupler and adapter, each available with male or female NPT or hose shank termination. A dust plug that seals the coupler and a dust cap to seal the adapter are also available.

Easy to use: To couple, simply insert adapter in the coupler and press the side levers down. Inner cams lock into the body groove of the adapter, forcing it against the gasket to produce a tight, leak-proof seal. To uncouple, lift levers and pull out the adapter. Finger rings attached to the levers permit a better grip.

All couplers are furnished with oil and solvent-resistant buna-N rubber gaskets which have an operating temperature of 225° F. Generally, buna-N is recommended for petroleum derivatives, neutral or slightly acidic salt solutions, alcohols, ethers, glycols, fats, oil and greases.

ALUMINUM

Lightweight and economical! Some of the many applications for these couplings include handling dry products, conveying water and water storage, petrochemicals and petroleum.

Size In.	Pressure Rating, PSI	B Coupler No.	B Coupler NET EACH	D Coupler No.	D Coupler NET EACH	C Coupler No.	C Coupler NET EACH	F Adapter No.	F Adapter NET EACH
¾	250	5588K11	$7.96	5589K11	$7.97	5590K11	$7.12	5591K11	$3.96
1	250	5588K12	8.16	5589K12	8.38	5590K12	8.08	5591K12	4.51
1¼	250	5588K13	11.08	5589K13	11.38	5590K43	10.57	5591K13	6.16
1½	250	5588K14	10.87	5589K14	11.47	5590K14	10.92	5591K14	6.21
2	250	5588K15	11.40	5589K15	11.73	5590K15	12.36	5591K15	7.76
2½	150	5588K16	17.42	5589K16	18.35	5590K16	18.70	5591K16	14.56
3	125	5588K17	21.82	5589K17	21.95	5590K17	21.44	5591K17	15.96
4	100	5588K18	34.12	5589K18	33.72	5590K18	31.85	5591K18	31.03

Size In.	Pressure Rating, PSI	A Adapter No.	A Adapter NET EACH	E Adapter No.	E Adapter NET EACH	Dust Plug No.	Dust Plug NET EACH	Dust Cap No.	Dust Cap NET EACH	Extra Gaskets No.	Extra Gaskets NET EACH
¾	250	5592K11	$3.22	5593K11	$4.59	5594K11	$4.29	5595K11	$7.12	5345K11	$0.40
1	250	5592K12	3.69	5593K12	4.80	5594K12	4.79	5595K12	8.92	5345K12	.40
1¼	250	5592K13	4.39	5593K13	5.69	5594K13	5.88	5595K13	11.37	5345K13	.40
1½	250	5592K14	4.69	5593K14	5.88	5594K14	6.09	5595K14	10.49	5345K14	.40
2	250	5592K15	5.58	5593K15	7.29	5594K15	6.58	5595K15	8.97	5345K15	.40
2½	150	5592K16	8.97	5593K16	12.17	5594K16	9.13	5595K16	14.96	5345K16	.40
3	125	5592K17	12.27	5593K17	14.56	5594K17	10.27	5595K17	15.68	5345K17	.52
4	100	5592K18	28.84	5593K18	30.90	5594K18	15.66	5595K18	23.25	5345K18	.52

BRASS

Ideal for use where rust and corrosion are a problem— fresh water, salt water, liquid sugar, and in breweries.

Can be used with gasoline and many other petroleum products.

Size In.	Pressure Rating, PSI	B Coupler No.	B Coupler NET EACH	D Coupler No.	D Coupler NET EACH	C Coupler No.	C Coupler NET EACH	F Adapter No.	F Adapter NET EACH
¾	250	5352K11	$11.74	5356K11	$11.93	5359K11	$11.99	5357K11	$5.61
1	250	5352K12	12.20	5356K12	12.42	5359K12	13.60	5357K12	6.00
1¼	250	5352K13	16.82	5356K13	16.34	5359K13	17.70	5357K13	9.29
1½	250	5352K14	17.27	5356K14	17.01	5359K14	17.82	5357K14	10.09
2	250	5352K15	21.12	5356K15	20.14	5359K15	21.23	5357K15	13.31
2½	150	5352K16	25.24	5356K26	28.50	5359K16	33.16	5357K16	24.65
3	125	5352K17	40.97	5356K17	37.94	5359K17	36.16	5357K17	27.97
4	100	5352K18	57.60	5356K18	61.00	5359K18	58.15	5357K18	50.78

Size In.	Pressure Rating, PSI	A Adapter No.	A Adapter NET EACH	E Adapter No.	E Adapter NET EACH	Dust Plug No.	Dust Plug NET EACH	Dust Cap No.	Dust Cap NET EACH	Extra Gaskets No.	Extra Gaskets NET EACH
¾	250	5353K11	$4.86	5354K11	$7.33	5358K11	$5.58	5355K11	$9.66	5345K11	$0.40
1	250	5353K12	5.18	5354K12	8.80	5358K12	6.06	5355K12	12.96	5345K12	.40
1¼	250	5353K13	5.52	5354K13	11.00	5358K13	8.80	5355K13	14.78	5345K13	.40
1½	250	5353K14	6.56	5354K14	11.74	5358K14	9.19	5355K14	15.56	5345K14	.40
2	250	5353K15	9.38	5354K15	15.55	5358K15	9.59	5355K15	17.86	5345K15	.40
2½	150	5353K16	14.80	5354K16	25.62	5358K16	13.01	5355K16	20.55	5345K16	.40
3	125	5353K17	18.97	5354K17	26.79	5358K17	16.76	5355K17	25.72	5345K17	.52
4	100	5353K18	50.75	5354K18	55.06	5358K18	27.29	5355K18	40.04	5345K18	.52

316 STAINLESS STEEL

Corrosion resistant couplings are suitable for use in food and chemical processing.

Also excellent for use in the transportation, textile, paper, photographic, and pharmaceutical industries.

Size In.	Pressure Rating, PSI	B Coupler No.	B Coupler NET EACH	D Coupler No.	D Coupler NET EACH	C Coupler No.	C Coupler NET EACH	F Adapter No.	F Adapter NET EACH
¾	250	5573K11	$35.32	5574K11	$36.78	5575K11	$34.53	5576K11	$26.25
1	250	5573K12	39.26	5574K12	39.71	5575K12	36.78	5576K12	29.80
1¼	250	5573K13	43.36	5574K13	43.54	5575K13	43.36	5576K13	35.76
1½	250	5573K14	47.49	5574K14	49.51	5575K14	43.54	5576K14	37.74
2	250	5573K15	57.01	5574K15	58.84	5575K15	54.58	5576K15	41.74
2½	200	5573K16	77.88	5574K16	86.52	5575K16	72.27	5576K16	69.57
3	200	5573K17	107.85	5574K17	113.17	5575K17	95.70	5576K17	83.14
4	150	5573K18	144.15	5574K18	145.44	5575K18	132.26	5576K18	122.46

Size In.	Pressure Rating, PSI	A Adapter No.	A Adapter NET EACH	E Adapter No.	E Adapter NET EACH	Dust Plug No.	Dust Plug NET EACH	Dust Cap No.	Dust Cap NET EACH	Extra Gaskets No.	Extra Gaskets NET EACH
¾	250	5577K11	$22.93	5578K11	$24.00	5579K11	$19.26	5580K11	$30.78	5345K11	$0.40
1	250	5577K12	23.43	5578K12	25.24	5579K12	20.84	5580K12	34.47	5345K12	.40
1¼	250	5577K13	26.78	5578K13	27.33	5579K13	25.57	5580K13	39.19	5345K13	.40
1½	250	5577K14	24.79	5578K14	29.89	5579K14	23.77	5580K14	41.74	5345K14	.40
2	250	5577K15	29.46	5578K15	32.56	5579K15	31.04	5580K15	52.56	5345K15	.40
2½	200	5577K16	53.29	5578K16	55.15	5579K16	40.03	5580K16	58.52	5345K16	.40
3	200	5577K17	58.38	5578K17	65.23	5579K17	49.08	5580K17	64.95	5345K17	.52
4	150	5577K18	99.70	5578K18	120.15	5579K18	71.71	5580K18	82.31	5345K18	.52

Quick Co

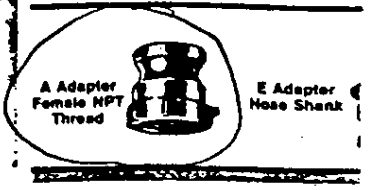

These plastic couplers feature great m
are lighter in weight than metal couplin
threads will never rust or lock. Ideal for inst
Easy to use: To couple, simply slip adapte
down side levers of coupler. Cams of lever

GLASS FIBER REINFORCED NYLON

Resists hydrocarbons, solvents, mild ac
ricultural chemicals, animal and vegetab
and oils, detergents, gasoline, and salt wa
The operating temperature range is −3
200° F. The couplers are nonconductive a
furnished with Buna-N gaskets and stainle
levers.

Size In.	Pressure Rating, PSI	F Adapter No.	F Adapter NET EACH	No
½	175	5599K11	$4.78	56
¾	175	5599K12	4.78	56
1	175	5599K13	5.20	56
1½	150	5599K14	6.36	56
2	150	5599K15	6.91	56
3	125	5599K16	12.18	56
4	75	5599K17	25.89	56

• Do not come with rings.

GLASS FIBER REINFORCED POLYPRO

Resists most chemicals, fertilizers, com
ganic mineral acids and their salts, plu
strong and weak acids. These couplers
Type 304 stainless steel levers and pins that
rust or bind. Furnished with EPDM
Working pressures: 100 psi at
70° F; 70 psi at 150° F.

Size In.	F Adapter No.	F Adapter NET EACH	A No.
½	—	—	5535K
¾	5535K59	$3.05	5535K
1	5535K26	3.33	5535K
1½	5535K23	3.77	5535K
2	5535K24	5.05	5535K
3	5535K61	15.99	5535K

FOOD GRADE

Made from white, FDA approved polypro
these couplers resist alkalies, salts, a
many acids, plus animal, vegetable, and
oils. Couplers are tasteless, odorless, and
ductive. Furnished with FDA grade, white
gaskets. Temperature range is 10° F to 20

Size In.	Pressure Rating, PSI	F Adapter No.	F Adapter NET EACH	N
¾	150	91105K78	$5.18	9
1	150	91105K79	5.80	9
1½	100	91105K81	7.05	9
2	100	91105K82	8.19	9
3	50	91105K83	15.55	9

Dry Discon

To prevent product loss, use these quic
connect/disconnect couplings at liqu
transfer points. Ideal for handling petroleu
products, solvents, agricultural chemica
vegetable oils, and many acids and caustic
The spring loaded coupler has a built-
valve. The adapter has a spring loaded po
pet for fast closing and a tight seal.
Easy to use: To couple, press down ca
arms of coupler and cams lock into groo
on adapter. Then turn the lever to 'Open p
sition to start the flow. To uncouple, turn l
ver to the 'Close' position to stop the flo
and raise the cam arms. If coupling

Couplings

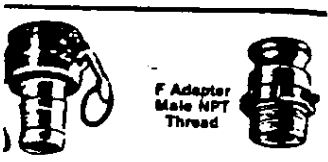

, simply insert adapter in the coupler and
m. Inner cams lock into the body groove of
ainst the gasket to produce a tight, leak-
ift levers and pull out the adapter. Finger
rs permit a better grip.
ed with oil and solvent-resistant buna-N
ve an operating temperature of 225° F.
mmended for petroleum derivatives, neu-
olutions, alcohols, ethers, glycols, fats, oil,

C Coupler No.	NET EACH	F Adapter No.	NET EACH
5590K11	$7.12	5591K11	$3.99
5590K12	8.06	5591K12	4.59
5590K43	10.57	5591K13	6.16
5590K14	10.92	5591K14	6.21
5590K15	12.36	5591K15	7.78
5590K16	18.70	5591K16	14.56
5590K17	21.44	5591K17	15.96
5590K18	31.96	5591K18	31.03

Dust Cap No.	NET EACH	Extra Gaskets No.	NET EACH
F	$7.12	5345K11	$0.40
	8.92	5345K12	.40
	11.17	5345K13	.40
	10.49	5345K14	.40
	9.97	5345K15	.40
559 16	14.96	5345K16	.40
5595K17	15.66	5345K17	.52
5595K18	23.25	5345K18	.52

C Coupler No.	NET EACH	F Adapter No.	NET EACH
5359K11	$11.99	5357K11	$5.81
5359K12	13.60	5357K12	6.80
5359K13	17.70	5357K13	9.29
5359K14	17.82	5357K14	10.09
5359K15	21.23	5357K15	13.31
5359K16	33.16	5357K16	24.65
5359K17	36.16	5357K17	27.97
5359K18	59.15	5357K18	50.70

Dust Cap No.	NET EACH	Extra Gaskets No.	NET EACH
5355K11	$9.68	5345K11	$0.40
5355K12	12.96	5345K12	.40
5355K13	14.78	5345K13	.40
5355K14	15.56	5345K14	.40
5355K15	17.86	5345K15	.40
5355K16	20.55	5345K16	.40
5355K17	25.72	5345K17	.52
5355K18	40.04	5345K18	.52

C Coupler No.	NET EACH	F Adapter No.	NET EACH
5575K11	$34.53	5576K11	$26.25
5575K12	36.78	5576K12	29.80
5575K13	43.36	5576K13	35.76
5575K14	43.54	5576K14	37.74
5575K15	54.58	5576K15	41.74
5575K16	72.27	5576K16	69.57
5575K17	95.70	5576K17	83.14
5575K18	132.26	5576K18	122.46

Dust Cap No.	NET EACH	Extra Gaskets No.	NET EACH
580K11	$30.78	5345K11	$0.40
580K12	34.47	5345K12	.40
580K13	39.19	5345K13	.40
580K14	41.74	5345K14	.40
580K15	52.56	5345K15	.40
580K16	58.52	5345K16	.40
	64.95	5345K17	.52
	82.31	5345K18	.52

STER-CARR

Quick Connect Hose Couplings

Instant-Lok Couplings

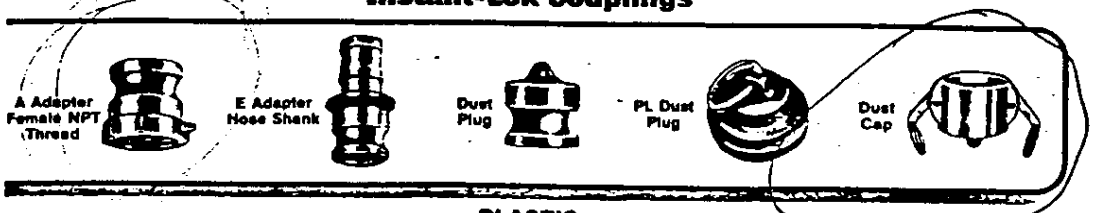

PLASTIC

These plastic couplers feature great mechanical strength and are lighter in weight than metal couplings. Their corrosion-free threads will never rust or lock. Ideal for instant hose coupling.

Easy to use: To couple, simply slip adapter into couple and press down side levers of coupler. Cams of levers lock into the groove of the adapter, forcing it against the gasket in the coupler and producing a leakproof seal. To uncouple, lift levers and pull out adapter.

Plastic couplers meet MIL-C-27487 specifications and are interchangeable with other couplings meeting this standard, including metal couplers.

GLASS FIBER REINFORCED NYLON

Resists hydrocarbons, solvents, mild acids, agricultural chemicals, animal and vegetable fats and oils, detergents, gasoline, and salt water.

The operating temperature range is −30° F to 200° F. The couplers are nonconductive and come furnished with Buna-N gaskets and stainless steel levers.

Size In.	Pressure Rating, PSI	B Coupler No.	NET EACH	D Coupler No.	NET EACH	C Coupler No.	NET EACH
½	175	5596K11•	$8.89	5597K11•	$8.39	5598K11•	$8.78
¾	175	5596K12•	8.89	5597K12•	8.39	5598K12•	8.78
1	175	5596K13•	10.32	5597K13•	9.72	5598K13•	10.21
1½	150	5596K14	12.62	5597K14	11.86	5598K14	12.51
2	150	5596K15	14.49	5597K15	13.81	5598K15	14.38
3	125	5596K16	21.87	5597K16	20.64	5598K16	21.35
4	75	5596K17	33.33	5597K17	31.15	5598K17	32.44

Size In.	Pressure Rating, PSI	F Adapter No.	NET EACH	A Adapter No.	NET EACH	E Adapter No.	NET EACH	Dust Plug No.	NET EACH	Dust Cap No.	NET EACH	Extra Gaskets No.	NET EACH
½	175	5599K11	$4.78	5600K11	$4.06	5601K11	$4.88	—	—	—	—	5596K51	$0.56
¾	175	5599K12	4.78	5600K12	3.95	5601K12	4.88	5602K11•	$3.93	5603K11•	$7.85	5596K51	.56
1	175	5599K13	5.20	5600K13	3.95	5601K13	5.20	5602K12	4.12	5603K12•	8.48	5596K52	.50
1½	150	5599K14	6.36	5600K14	5.05	5601K14	6.25	5602K13	4.98	5603K13	11.62	5596K53	.50
2	150	5599K15	6.91	5600K15	5.93	5601K15	7.02	5602K14	5.97	5603K14	13.50	5596K54	.60
3	125	5599K16	12.18	5600K16	11.20	5601K16	12.30	5602K15	11.08	5603K15	14.26	5596K55	.63
4	75	5599K17	25.89	5600K17	22.55	5601K17	24.90	5602K16	17.57	5603K16	25.17	5596K56	.90

• Do not come with rings.

GLASS FIBER REINFORCED POLYPROPYLENE

Resists most chemicals, fertilizers, common organic mineral acids and their salts, plus some strong and weak acids. These couplers feature Type 304 stainless steel levers and pins that will not rust or bind. Furnished with EPDM gaskets.

Working pressures: 100 psi at 0° F; 125 psi at 70° F; 70 psi at 150° F.

Size In.	B Coupler No.	NET EACH	D Coupler No.	NET EACH	C Coupler No.	NET EACH
½	5535K55	$5.62	—	—	5535K51	$5.91
¾	5535K56	5.62	5535K64	$5.91	5535K52	5.91
1	5535K25	6.28	5535K35	6.28	5535K15	6.28
1½	5535K21	7.71	5535K31	7.71	5535K11	8.87
2	5535K22	9.25	5535K32	10.02	5535K12	9.58
3	5535K57	16.29	5535K36	15.21	5535K16	15.85

Size In.	F Adapter No.	NET EACH	A Adapter No.	NET EACH	E Adapter No.	NET EACH	PL Dust Plug No.	NET EACH	Dust Cap No.	NET EACH	Extra Gaskets No.	NET EACH
½	—	—	5535K65	$2.84	5535K53	$3.05	5535K68	$2.67	5535K72	$5.64	5535K81	$0.48
¾	5535K59	$3.05	5535K66	2.95	5535K54	3.41	5535K68	2.67	5535K72	5.64	5535K81	.48
1	5535K26	3.33	5535K37	2.85	5535K17	3.32	5535K45	2.38	5535K46	7.09	5535K82	.56
1½	5535K23	3.77	5535K33	3.28	5535K13	3.77	5535K41	2.79	5535K43	6.94	5535K83	.60
2	5535K24	5.05	5535K34	3.67	5535K14	5.05	5535K42	3.44	5535K44	9.25	5535K84	.63
3	5535K61	15.99	5535K38	11.94	5535K18	15.75	5535K69	9.18	5535K73	16.66	5535K85	.88

FOOD GRADE

Made from white, FDA approved polypropylene, these couplers resist alkalies, salts, alcohols, many acids, plus animal, vegetable, and mineral oils. Couplers are tasteless, odorless, and nonconductive. Furnished with FDA grade, white Buna-N gaskets. Temperature range is 10° F to 200° F.

Size In.	Pressure Rating, PSI	B Coupler No.	NET EACH	D Coupler No.	NET EACH	C Coupler No.	NET EACH
¾	150	91105K56	$9.33	91105K67	$9.33	91105K62	$9.33
1	150	91105K57	11.62	91105K68	10.78	91105K83	10.26
1½	100	91105K58	13.27	91105K69	13.06	91105K84	13.06
2	100	91105K59	15.14	91105K71	15.35	91105K65	15.35
3	50	91105K61	25.92	91105K72	25.92	91105K66	25.92

Size In.	Pressure Rating, PSI	F Adapter No.	NET EACH	A Adapter No.	NET EACH	E Adapter No.	NET EACH	Dust Plug No.	NET EACH	Dust Cap No.	NET EACH	Extra Gaskets No.	NET EACH
¾	150	91105K78	$5.18	91105K51	$4.35	91105K73	$5.44	91105K89	$4.67	91105K84	$8.19	91105K41	$0.78
1	150	91105K79	5.80	91105K52	4.71	91105K74	6.43	91105K91	4.81	91105K85	10.58	91105K42	.83
1½	100	91105K81	7.05	91105K53	5.39	91105K75	7.87	91105K92	5.81	91105K86	13.48	91105K43	1.04
2	100	91105K82	8.19	91105K54	6.74	91105K76	8.19	91105K93	6.57	91105K87	15.55	91105K44	1.24
3	50	91105K83	15.55	91105K55	14.14	91105K77	17.46	91105K94	14.00	91105K88	19.70	91105K45	1.87

Dry Disconnect Couplings

To prevent product loss, use these quick connect/disconnect couplings at liquid transfer points. Ideal for handling petroleum products, solvents, agricultural chemicals, vegetable oils, and many acids and caustics.

The spring loaded coupler has a built-in valve. The adapter has a spring loaded poppet for fast closing and a tight seal.

Easy to use: To couple, press down cam arms of coupler and cams lock into groove on adapter. Then turn the lever to 'Open' position to start the flow. To uncouple, turn lever to the 'Close' position to stop the flow and raise the cam arms. If coupling is disconnected with lever in 'Open' position, coupler and adapter automatically shut off to prevent liquid loss.

Pressure ratings at 70° F: 175 psi for 1½" size; 125 psi for 2" size; 100 psi for 3" size.

Couplers and adapters are female threaded and can be fitted to either a male pipe end or to a hose fitting. Aluminum and bronze construction with Buna-N seals.

Size	Coupler No.	NET EACH	Adapter No.	NET EACH
1½"	5605K21	$318.91	5605K11	$98.82
2"	5605K22	333.03	5605K12	107.16
3"	5605K23	633.77	5605K13	198.92

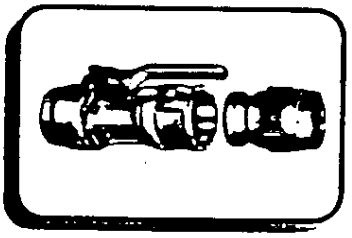

RECEIVED
MAY 0 2 1996
MK-CRANE

May 2, 1996

MEMORANDUM

From: 09510
To: OICC (Brent Robertson)

Subj: **Permit for Air Stripper Operation**

1. At 1600 hours on May 1, 1996, the U.S. EPA notified our office that the construction permit from the Water Management Office at the Indiana Department of Environmental Management had signed the construction permit for the air stripper located at Building 146. Furthermore, the permit will be in the mail today, and as long as the permit is in the mail, we can begin operating the air stripper. Therefore, we have permission to begin operation of the air stripper. Since the sump is approximately half full, Morrison Knudsen should begin operating the air stripper as soon as the roll-off boxes are removed from the site. If however, there is a delay in removing the roll-offs, then MK should either move the roll-offs, or temporarily plumb the air stripper to begin operation today. It is imperative that the air stripper begin operation as soon as possible to avoid further water management issues and possible sump overflow.

2. NAVSURFWARCENDIV Crane point of contact is Mr. Thomas J. Brent, Code 09510, telephone 812-854-6160.

Thomas J. Brent

RECEIVED
MAY 0 2 1996
MK-CRANE

Copy to:
MK (Steve Downey)

NSWC - CRANE 4324-0009			
PROJECT MEMBER	ACT	INFO	INIT
PROJECT MANAGER			BTO
PROJECT ENGINEER			
GNL SUPT			
SAFETY AND HEALTH			
QA/QC SUPERVISOR			
PROJECT CONTROLS			
FIELD ENGINEERING			
PMO-CHARLESTON	✓		
FILE: 16 Oct 5			
FILE: 24.070.038			
FILE:			

RECEIVED
JUL 09 1996
MK-CRANE

RECEIVED
JUN 28 1996
MK CORP

5090
Code 18011
28 June 96

Morrison Knudsen Corporation
2420 Mall Drive
Corporate Square 1 Suite 211
North Charleston, SC 29406

NAV/MKC-291

Subj: CONTRACT N62467-93-D-1106, DELIVERY ORDER 27, RESPONSE ACTION CONTRACT, NSWC CRANE, IN

Gentlemen:

This letter is to serve as technical direction for the following actions for SWMU 16/16 that have been verbally directed by the NTR:

Take the necessary action to have a smoke test conducted to determine drain pipes to the east and west sumps.

Take the necessary action to have a fuel tank (UST) sampled and analyzed for VOC's.

Take the necessary action to have water pumped from the east sump to the west sump using portable pumps and hose.

Take the necessary action to investigate potential cross connection of the storm sewer and drain pipe to the west sump.

You shall proceed promptly with the performance of this technical direction. You are to provide a budgetary impact of this direction to the Contracting Officer within 5 days of its issuance. If in your opinion, this direction falls within any of the categories defined in paragraph (b) of clause G8, Technical Direction, of your contract, you shall promptly notify the Contracting Officer in writing. You shall take no action until the Contracting Officer has issued a modification to the delivery order or otherwise resolved the issue.

If you have any questions, contact Jimmy Jones, Code 18011, at 803-820-5544 or DSN 583-5544.

J. F. Jones
J. F. Jones
COTR RAC II

NSWC - CRANE 4324-0009			
PROJECT MEMBER	ACT	INFO	INIT
PROJECT MANAGER	✓		STO
PROJECT ENGINEER			
GNL SUPT		✓	
SAFETY AND HEALTH			
QA/QC SUPERVISOR		✓	
PROJECT CONTROLS	✓		
FIELD ENGINEERING		✓	
PMO-CHARLESTON			
FILE: 11.01.5			

Copy to:
Code 0232RH
Code 1864
Code 0514
Brent Robertson - ROICC NSWC Crane

DIST	1	A	R
FM	✓		
PM	✓		
PCM			
CAM	✓		
EM	✓		
PURCH	✓		
OCM			
SAFETY			
WILSON	✓		
File	✓		

C-4324

APPENDIX B

AIR STRIPPER DRAWINGS

AIR STRIPPER DRAWINGS

As-Built Drawings and Manuals ..... 115 pages
Hydromatic Pump Manuals for Sumps ..... 23 pages

NEPCCO

GROUNDWATER REMEDIATION SYSTEM

NSWC-CRANE
CRANE, IN
NEPCCO JOB #767203
MAY 1996

CAUTION

THIS SYSTEM IS DESIGNED FOR USE IN NON-CLASSIFIED LOCATIONS. REFERENCE NEC ARTICLE 500, 5A & 5B.

SYSTEM ACCEPTANCE PROCEDURE

JOB NUMBER: 767203 **CUSTOMER:** MORRISON-KNUDSEN

CATEGORY	ACCEPTED	INITIALS	DATE
	DO NOT CHECK OFF UNTIL COMPLETE!!		
1.0 SYSTEM DESIGN			
1.1 PROCESS FLOW PER P&ID	✓	[illegible]	5/23
1.2 ITEMS LABELED PER P&ID (VALVES, GAUGES, TANKS, & INFLUENT/EFFLUENT PIPES, WATER/AIR ETC)	✓	[illegible]	5/23
1.3 CONTROL LOGIC VERIFIED AS PER LOGIC DRAWING	✓	[illegible]	5/23
1.4 COMPONENTS PER MATERIALS LIST VOLTS, PHASE HP, FRAME TYPE	✓	[illegible]	5/23
1.5 CONTROL PANELS LABELLED PER LADDER DWG.	✓	[illegible]	5/23
1.6 TERMINAL BLOCKS, MOTOR STARTER, & CONTACTORS LABELED	✓	[illegible]	5/23
2.0 PHYSICAL			
2.1 ADEQUATE BRACES INSTALLED.....	✓	[illegible]	5/23
2.2 PIPING ORIENTATION PER LAYOUT DRAWING	✓	[illegible]	5/23
2.3 SKID PERIMETER CLEAR	✓	[illegible]	5/23
2.4 TRAY ALIGNMENT MARKS	✓	[illegible]	5/23
2.5 TOUCH UP PAINT COMPLETE	✓	[illegible]	5/23
2.6 NAMEPLATE ATTACHED	✓	[illegible]	5/23
2.7 SERIAL NUMBER STAMPED ON SKID @ STANCHION	✓	[illegible]	5/23
2.8 SERIAL NUMBERS RECORDED	✓	[illegible]	5/23
3.0 SYSTEM FINAL TEST			
3.1 ELECTRICAL POWER AND CONTROLS PER WIRING DIAGRAMS	✓	[illegible]	5/23
3.2 CORRECT RANGE FOR INSTRUMENT READINGS	✓	[illegible]	5/23
3.3 MOTOR ROTATION/MECH MOVEMENT CORRECT (AMP METERS, CFM INDICATORS, PRESSURE GAUGES, TEMPERATURE GAUGES ECT.)	✓	[illegible]	5/23
3.4 ALL CONTROLS CHECKED FOR CORRECT OPERATION	✓	[illegible]	5/23
3.5 SYSTEM SHUTDOWN VIA EACH FAILSAFE SENSOR..	✓	[illegible]	5/23
3.6 PUMP CONTROLLERS CYCLING PUMPS CORRECTLY	✓	[illegible]	5/23
3.7 ALL FAILSAFE SENSORS RECONNECTED AFTER TEST..	✓	[illegible]	5/23

NEPCCO QUALITY/CLIENT SATISFACTION SURVEY

CLIENT INFORMATION	PROJECT INFORMATION
Client Company _____	Project No. _____
Client Contact _____	Project Name _____
Address _____	Project Size $ _____
Phone # ( ) Zip _____	System Description _____
NEPCCO INFORMATION _____ Date of Survey	_____
	_____ Project Manager

INTRODUCTION

NEPCCO is committed to maintaining and continually improving the quality of the products and services we offer. We define quality as meeting client requirements. Therefore, the best measure of our performance is our clients' level of satisfaction.

We would like to ask you to help us by answering a few short questions that rate our performance on a scale of 1 to 5. A rating of "1" indicates totally unsatisfactory performance, a "3" is acceptable, and a "5" means outstanding.

		RATING	SCORE
1	On this scale of 1 to 5, how well has NEPCCO communicated our overall capabilities to you?	1 2 3 4 5	
2	How would you rate the timeliness of our responses to your telecons or requests for information?	1 2 3 4 5	
3	How well have we met your requirements in providing specified performance?	1 2 3 4 5	
4	How well did we do in meeting your schedule requirements?	1 2 3 4 5	
5	After initial startup, how do you rate our equipment reliability?	1 2 3 4 5	
6	How do you rate the professional competence of our customer support staff?	1 2 3 4 5	
7	What is your assessment of the percentage uptime our equipment has achieved?	50% 60% 70% 80% 90% 100%	
8	How well do NEPCCO's system sizing sheets ease the process of requesting an equipment quotation?	1 2 3 4 5	
9	How well do our approval drawing packages meet your requirements?	1 2 3 4 5	
10	How well do our invoices and billing procedures meet your requirements?	1 2 3 4 5	
12	How would you scope the completeness of our services?	1 2 3 4 5	
13	How do you rate the the overall value of the products and services provided to you by NEPCCO?	1 2 3 4 5	

(over)

NEPCCO QUALITY/CLIENT SATISFACTION SURVEY

LOSING

Thank you very much for your time. We very much appreciate your willingness to help us. (when appropriate: the issues raised will be addressed promptly. One of your managers will be contacting you)

I would like to ask one final question: What changes would you recommend that NEPCCO make to improve its service to you?

Again. Thank you. Survey Conducted by: _____

FOLLOWUP ACTION

What and How:

Who: by When

REVIEWER _____

Signature _____ **Date:** _____

Distribution:

_____ _____
_____ _____
_____ _____
_____ _____
_____ _____
_____ _____
_____ _____
_____ _____
_____ _____
_____ _____

Welcome!

Thank you for choosing NEPCCO as your equipment supplier. At NEPCCO, we are committed to developing outstanding products that are easy to use; our goal is to significantly enhance your productivity.

We are equally committed to providing you with the highest standard of service and support after you have purchased a NEPCCO product. We believe that the quality of our support and customer service is as important as the quality of our products.

Please don't hesitate to let me know how we are doing. It is through your comments and suggestions that we learn how we can continue to improve our products and services. Our toll free Customer Support No. is 800-277-3279.

We value you as a customer, and we want you to be as pleased with your NEPCCO product as we are in bringing it to you.

Sincerely,

Michael R. Studer
Quality Assurance Manager

2140-100 N.E. 36th Ave., Ocala, FL 34470
(904) 867-7482 • Fax: (904) 867-1320

NEPCCO Standard Equipment Limited Warranty

(a) NEPCCO, a Subsidiary of International Technology Corporation, warrants that any Equipment which it manufactures will be free from substantial defects in material and workmanship for a period of one (1) year from the date such goods are delivered to a carrier by NEPCCO for shipment to the Customer.

(b) The Customer agrees that the liability of NEPCCO hereunder shall be limited to replacing, repairing, or issuing credit for, at NEPCCO's discretion, any Equipment which is returned FOB NEPCCO's plant within the applicable term of the warranty, provided that (i) upon examination of the Equipment NEPCCO determines that the alleged defect constitutes a substantial defect, and (ii) the warranty made herein is not invalid pursuant to Section (d) hereof. For purposes hereof, a substantial defect shall mean any defect which prevents the Equipment from operating in accordance with NEPCCO's published specifications. In the event that NEPCCO determines that Equipment which is no longer manufactured by it contains a substantial defect and the warranty covering the defective equipment is not invalid pursuant to Section. In no case is Equipment to be returned by the Customer without first obtaining a Return Authorization number from NEPCCO. Equipment which is repaired or replaced pursuant to this warranty shall continue to be warranted for the unexpired portion of the warranty term applicable to the Equipment so repaired or replaced. NEPCCO shall make the final determination as to the existence or cause of any alleged defect.

(c) The foregoing warranty shall not be valid (i) if the alleged defect is the result of abuse, misuse, accident, alteration, neglect, or unauthorized repair; (ii) if NEPCCO requires installation of Equipment by specifically approved NEPCCO employee and such installation is not effected, or the Equipment is otherwise installed improperly. Any repair shall be deemed unauthorized unless it is made (i) by NEPCCO or a duly authorized agent of NEPCCO or (ii) with the written consent of NEPCCO.

(d) The operating performance of treatment, abatement and recovery Equipment and systems is affected by factors unrelated to their manufacture, including operating environment and such conditions of use as contaminant and related substance build-up, the frequency and type of operator maintenance and other external variables. For these reasons, specific levels of performance cannot be guaranteed for such Equipment and systems.

(e) **THIS WARRANTY IS THE SOLE WARRANTY MADE BY NEPCCO TO THE CUSTOMER AND IS IN LIEU OF ALL OTHER WARRANTIES OR OBLIGATIONS, EXPRESS OR IMPLIED. NEPCCO EXPRESSLY DISCLAIMS ALL IMPLIED WARRANTIES OR MERCHANTABILITY OR FITNESS FOR A PARTICULAR PURPOSE.**

(f) **THE CUSTOMER AGREES THAT IN NO EVENT SHALL NEPCCO BE LIABLE FOR SPECIAL, INCIDENTAL, INDIRECT, OR CONSEQUENTIAL DAMAGES, INCLUDING BUT NOT LIMITED TO LOSS OF PROFITS, LOSS OF USE, OR ANY OTHER ECONOMIC LOSS, WHETHER BASED ON CONTRACT, TORT.**

(g) **THE REMEDIES PROVIDED HEREIN ARE CUSTOMER'S SOLE AND EXCLUSIVE REMEDIES.**

Rev. A-10/93

UNLOADING PROCEDURE FOR NEPCCO SKID MOUNTED EQUIPMENT

BEFORE ATTEMPTING TO UNLOAD ANY EQUIPMENT, ENSURE THAT NO DAMAGE HAS OCCURRED DURING SHIPMENT.

FORKLIFT

NOTE: NEPCCO DOES NOT RECOMMEND THAT SYSTEMS OF EXCESSIVE WEIGHT OR SIZE (LARGER THAN 6' X 12') OR CONTAINERIZED SYSTEMS (BUILDINGS) BE UNLOADED WITH A FORKLIFT. FORKLIFT SLOTS ON 8' X 16' AND 10' X 20' SKIDS ARE INTENDED ONLY FOR MOVING THE SKID AT THE NEPCCO FACTORY.

1) Verify that all shipping restraints have been removed.

2) Allow forks to enter the fork slots as far as possible.

3) Lift the skid and tilt as necessary to clear trailer bed.

4) Back away from trailer until the unit is clear, then lower the unit for transportation.

5) Set skid into place and withdraw forks from fork slots.

CRANE

1) Verify that all shipping restraints have been removed.

2) Containerized units (buildings), as well as many skid-mounted systems, require the use of cable spreader bars when unloading with a crane. The distance between the spreader bar eyes should be a minimum of 12'.

3) The cables attaching the spreader bars to the skid lifting eyes should be a minimum of 12', and should be secured at each connection point with a clevis of appropriate rating.

4) Connect spreader assembly to crane hook with suitable lifting cables.

5) Attach lifting cables to each of the spreader eyes and secure other end of cables to skid pad eyes.

6) The skid should be lifted into place in a gentle manner in order to ensure safety and avoid damage to the equipment.

7) When the skid has been set in place, all lifting apparatus should be carefully removed and promptly stored.

START UP PROCEDURES 1

ENGINEERING DRAWINGS

COMPONENTS LISTS

TurboTray™ 2

PUMPS 3

CONTROL PANEL 4

MISC. SYSTEM COMPONENTS 5

MAINTENANCE & TROUBLESHOOTING 6

NOTES 7

START UP PROCEDURES

ENGINEERING DRAWINGS

COMPONENTS LISTS

IMPORTANT

ALL SYSTEMS UNDERGO A THOROUGH INSPECTION AND TESTING PROCEDURE AT THE FACTORY. HOWEVER, AS WITH ANY EQUIPMENT AFTER SHIPPING, THE SYSTEM SHOULD BE INSPECTED FOR ANY DAMAGE BEFORE START UP. ALL JOINTS, FITTINGS, AND AC POWER CONNECTIONS SHOULD BE CHECKED TO ENSURE THAT THEY HAVEN'T LOOSENED DURING SHIPMENT. ALL FAILSAFE SENSORS MUST BE TESTED PRIOR TO THE INTRODUCTION OF CONTAMINATED WATER TO THE SYSTEM. VESSELS EQUIPPED WITH LIQUID LEVEL FAILSAFE SENSORS SHOULD BE CAREFULLY FILLED WITH POTABLE WATER TO VERIFY SENSOR OPERATION.

NEPCCO'S SKID MOUNTED SYSTEMS ARE PROTECTED WITH PLASTIC WRAP FOR SHIPPING PURPOSES ONLY. UPON RECEIPT OF THE SYSTEM, ALL PROTECTIVE WRAPPING AND TAPE SHOULD BE REMOVED. IF THE SYSTEM IS NOT GOING TO BE OPERATIONAL FOR A TIME, IT IS RECOMMENDED THAT THAT THE SYSTEM BE COVERED TO PROTECT IT FROM THE ELEMENTS.

THIS SYSTEM HAS BEEN TESTED AT THE DESIGN FLOW RATE. IF SITE CONDITIONS DICTATE THAT THE SYSTEM BE OPERATED AT LESS THAN THE DESIGN FLOW RATE, ADJUSTMENTS WILL BE NECESSARY FOR THE SYSTEM TO CYCLE CORRECTLY. CALL OUR CUSTOMER SUPPORT DEPARTMENT @ 1-800-277-3279 IF ASSISTANCE IS REQUIRED TO RE-CALIBRATE THE SYSTEM.

INSTALLATION & START UP PROCEDURES
NEPCCO #767203

1) Read the entire manual before operating this system. The manual contains specific information about the equipment on this system.

2) Install skid on a level concrete pad with a minimum perimeter of 6" around the skid base. Anchor bolts or clip fasteners are recommended to secure the skid to the pad.

3) Connect the influent and effluent lines to system piping as per process and instrumentation diagram numbered 767203-2-01.

4) Connect the recovery well pump (by others) at the single receptacle located on the control stanchion.

5) Ensure all valves are open/closed per process and instrumentation diagram numbered 767203-2-01, and close all petcocks and sample ports.

6) All electrical work should be performed by a qualified electrician in accordance with the latest edition of the National Electric Code, local codes and regulations. This system requires 240 VAC single phase power with neutral and ground. Short circuit protection should be provided according to the total load summary of the system. Refer to drawing #767203-5-01 for electrical connections.

7) Turn all control panel switches to the "OFF" position and ensure that the main power disconnect (supplied by others on site) is in the "OFF" position.

8) Place all circuit breakers and the blower motor starter inside FP-2 in the "ON" position and close the panel doors.

9) Turn on power at the main power disconnect.

10) When the air stripper blower reaches operating speed, open the intake damper until the pressure at the magnehelic gauge is approximately 7.5" H_2O.

11) Place the switch for the transfer pump "P-1" in the "AUTO" position for transfer pump operation.

12) After approximately 5 minutes of air stripper operation, adjust the air stripper blower intake damper so that the pressure at the magnehelic gauge is approximately 15" H_2O. If a higher air/water ratio is required, increase the pressure by opening the blower intake damper slightly. Be sure that the air stripper exhaust is not restricted.

13) When water reaches the high level sensor in the air stripper sump, transfer pump P-1 will automatically pump water off skid. P-2 operates between LSH-1 and LSL-1 (see P&ID drawing #767203-2-01).

14) Monitor the system and check operating parameters for satisfactory performance. This system is designed to treat water at a maximum flow rate of 20 GPM.

15) Routine system and individual component maintenance is essential for proper system operation and should be performed on a regular basis. Sample monthly maintenance forms are located in section 6 of the manual.

16) Your system manual includes individual equipment and component specifications and adjustment procedures necessary for initial start up and regular maintenance. Please study the manual before attemptingto operate this system.

17) If there are any problems with or questions about your system, we will be glad to help you resolve them. Please call our toll free number 1-800-277-3279.

1-800-277-EASY

GRUNDFOS®

The "BOSS" Stainless Steel Submersible Sump Pump

Models 200 & 300

Submittal Data

3350 RPM 60 Cycle

JOB or CUSTOMER:

ENGINEER:

CONTRACTOR:

SUBMITTED BY: DATE:

APPROVED BY: DATE:

ORDER NO.: DATE:

SPECIFICATION REF.:

QUANTITY	TAG NO.	MODEL NO.	GPM	FEET	VOLT	PHASE	COMMENT
					115	1	
					115	1	
					115	1	

Performance Curve

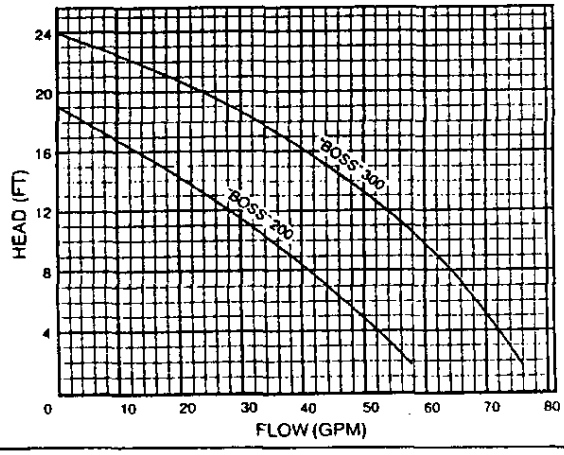

Technical Data

Flow Range: .5-75 US GPM
Temperature Range: 32°-120°F (0°-49°C) Continuous
32°-195°F (0°-90°C) Intermittent
(Totally submerged)
Min. Pumping Level: 1/2 Inch
Max. Solid Size: 3/8 Inch

Applications

Use for:
- Clear or dirty sump water
- Gray water and waste water
- Draining pools*, pits and tanks
- De-watering
- Light chemical mixing*

Do not use for:
- Raw sewage
- Flammables
- Highly corrosive liquids

*Flush after use

Electrical Data, Dimensions, and Weights

Model	HP	Ph.	Volts	Watts	Amps	Disc. Size	Shipping Weight (lbs)*	Shipping Vol. (Cu Ft)
The Boss 200	1/3	1	115	710	6.3	1 1/4	16	.5
The Boss 300	1/2	1	115	920	9.0	1 1/4	17 1/2	.5

*Not including float switch (1 1/2 lbs.)

Dimensions/Installation

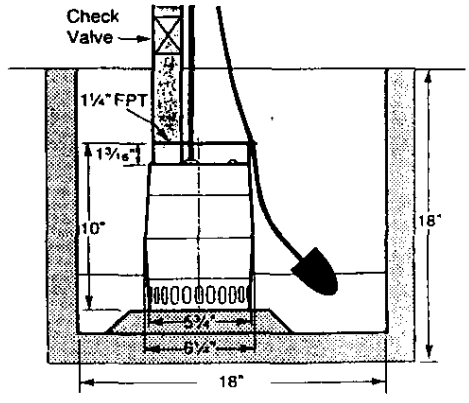

Power cord length: 10 ft.
Optional float switch length: 10 ft.
18" sump size recommended for best operation of wide angle mercury float switch.

Construction Materials

Stainless Steel:
- AISI 304 S. S.– Suction, Discharge and Intermediate Chambers, Impeller, Terminal Box Cover
- AISI 431 S. S.– Shaft

Noryl®: Wearplate, Terminal Box, Pump Handle
Compounded Carbon: Bearings
NBR: Seal Rings
Neoprene: O-rings, Power Cord Jacket, Optional Float Switch Jacket

GRUNDFOS PUMPS CORP. • 2555 CLOVIS AVE. • CLOVIS, CA 93612 • (209) 292-8000 • TELEX: 35-5353 • FAX: (209) 291-1357

KP TL 100 | 3/88
PRINTED IN USA

Performance Curves

CR4-U

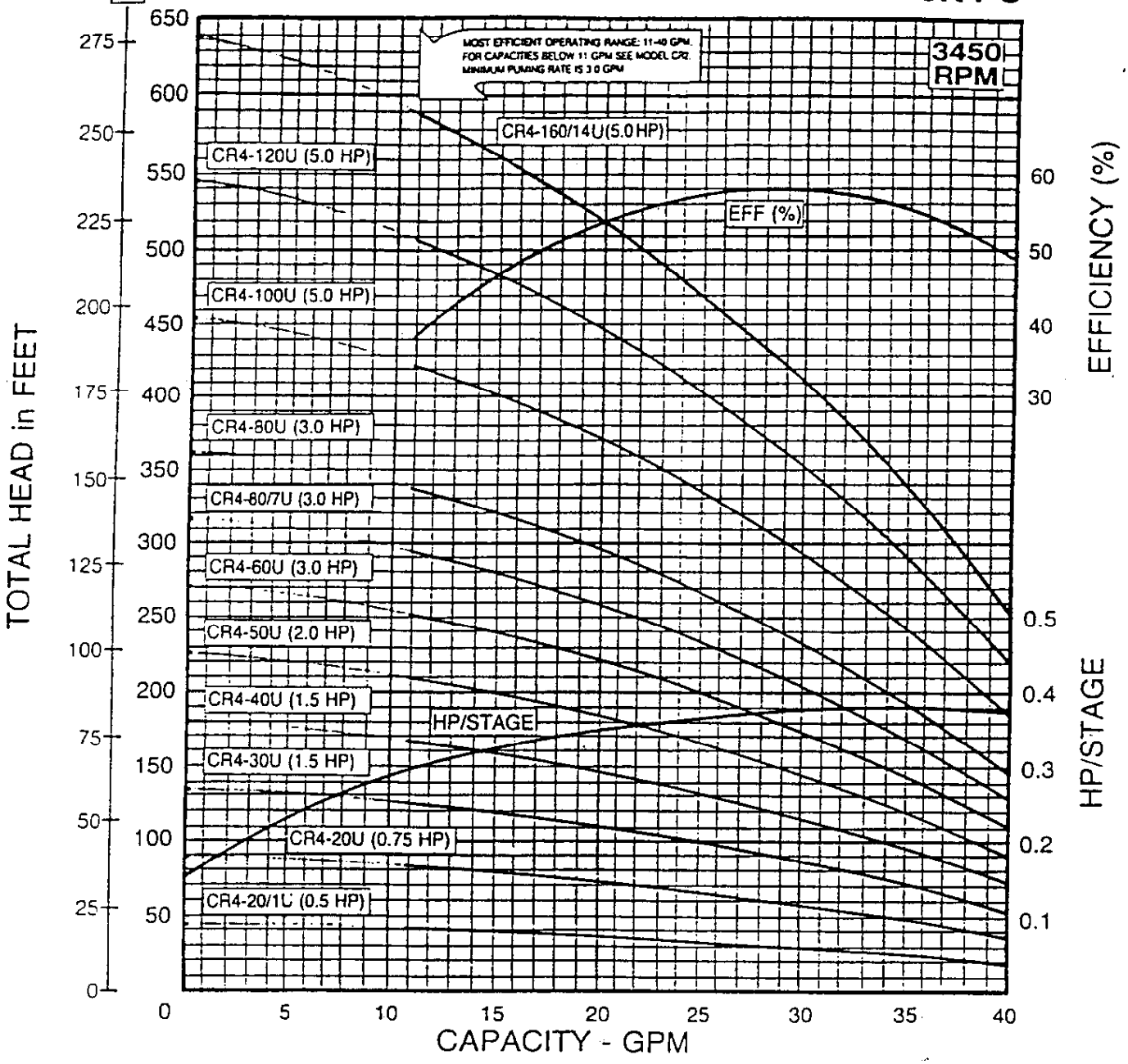

Construction Materials

Stainless Steel:	
AISI Type 304:	Impellers, Intermediate Chambers, Spacing Pipes, Outer Sleeve, Priming Valve, Coupling Guards
AISI Type 316:	Spline Shaft
Cast Iron:	Suction and Discharge Chamber, Motor Stool, Motor Coupling
Tungsten Carbide:	Shaft Seal Faces, Intermediate Bearing Journals
Aluminum Oxide Ceramic:	Intermediate Chamber Bearings
Viton:	O-Rings (EPDM for higher temperatures)
Teflon:	Neck Rings
Oil Paper:	Outer Sleeve Gaskets

NPSH Curve

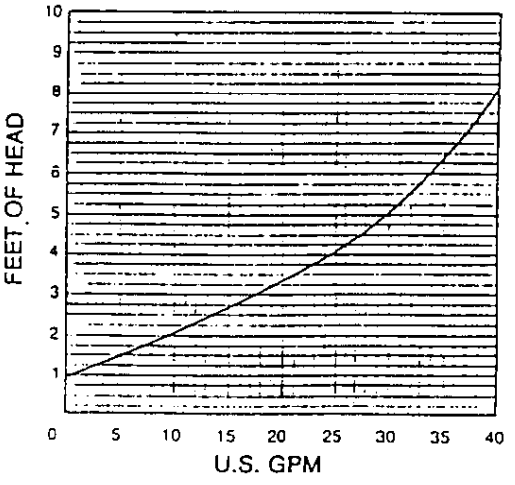

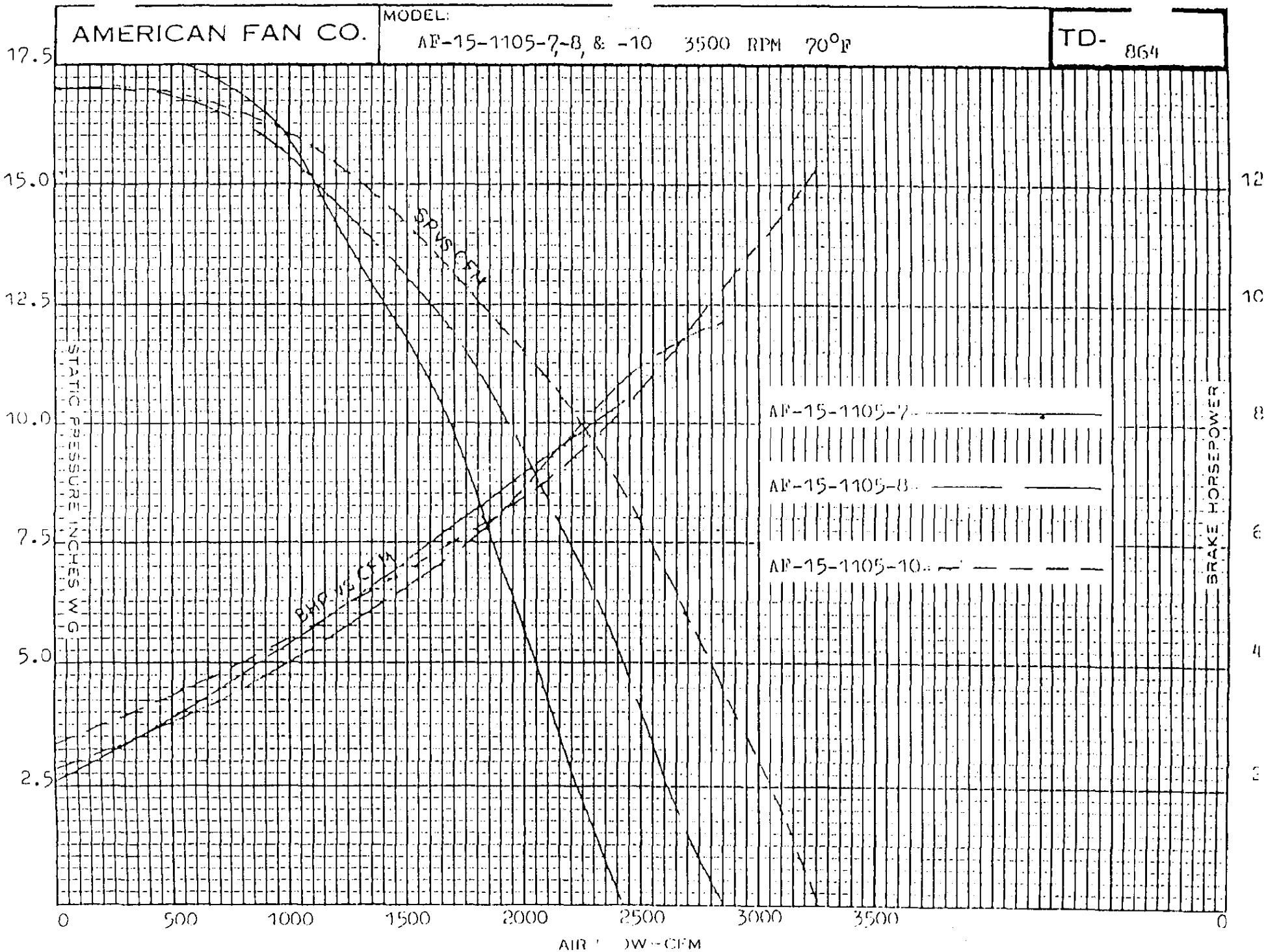
AMERICAN FAN CO.
MODEL:
AF-15-1105-7,-8, & -10 3500 RPM 70°F
TD- 864
17.5
15.0
12.5
10.0
7.5
5.0
2.5
STATIC PRESSURE INCHES W.G.
12
10
8
6
4
2
BRAKE HORSEPOWER
SP vs CFM
BHP vs CFM
AF-15-1105-7
AF-15-1105-8
AF-15-1105-10
0
500
1000
1500
2000
2500
3000
3500
0
AIR FLOW-CFM

COMPONENT LIST

5/23/96

PROJECT NAME: MORRISON-KNUDSEN
OJECT NUMBER: 767203

ITEM	NO. REQ.	P&ID LABEL	DESCRIPTION AND SPECIFICATIONS	PART NUMBER	SERIAL NUMBER
	CONTROLS (NEMA 4)				
1	1	FP-1	01C CONTROL PANEL, NEMA 4, W/ 3 EVENT FAILSAFE	50-0430	767203-I
2	2		BOX OUTLET	33-0147	
3	1		RECEPTACLE	33-0162	
4	1		LOCKABLE GFCI COVER	33-0162-01	
5	1		MANUAL ENCLOSURE BOX	50-0425	
6	1		SINGLE RECEPTACLE	5801-I LEVITON	
7	1		COVER PLATE	WP1010C	
8	1		ADAPTER PLATE	WP14	
	MOTOR STARTERS				
9	1	B-1	MANUAL MOTOR STARTER WO/ENCLOSURE, 1 PH, 240V, 3 HP, SIZE M-1	2510MC01	
10	1	FP-2	ENCLOSURE NEMA 4 12" X 10"	33-0078	767203-II
	SENSORS				
11	1	PSLL-1	AIR PRESSURE SWITCH	130-0042	
12	1		FEED THROUGH CIRCUIT BREAKER 1 POLE 15 AMP	QOU115	
13	1		FEED THROUGH CIRCUIT BREAKER 2 POLE 40 AMP	QOU240	
	PROBES & EXTENSIONS				
4	1	LSH/LSL-	MULTILEVEL PROBE, FOR LOW PROFILE AIRSTRIPPER	50-0095-05	
	SKID SYSTEM (PIPING, VALVES TOTALIZERS, SAMPLE PORTS,GAUGES, FILTERS)				
15	1	SK-75	4' X 6' SKID, BLUE	150-0002-01	
16	10		1" & 2" PIPE SUPPORTS (EACH)	150-0230	
17	1	FQ-1	FLOW TOTALIZER, 1.5"	150-0034	1405572
18	2	GV-1,2	GATE VALVE, 2", PVC	40-0121-01	
19	1	BV-2	BALL VALVE, 2", PVC	40-0143	
20	3	SP/1-3	SAMPLE PORT ASSEMBLY	50-0069	
21	3	PI-3	PRESSURE INDICATOR, 0-30 PSI	150-0016	
22	1	PF-1	FSI2L SS FILTER VESSELS W/ LEGS, 2L W/1 EACH 50 MICRON BAG		
23	1	CV-1	CHECK VALVE, 2", PVC W/ VITON SEALS	40-0131	
24	1	DPI	MAGNEHELIC 0-20" H2O	130-0001	
25	1	DPI	MAGNEHELIC KIT	50-0065	
26	1	BV-1	BALL VALVE, 1/8", SS (FOR MAGNEHELIC GAUGE)	41-0175	

COMPONENT LIST

5/23/96

PROJECT NAME: MORRISON-KNUDSEN
PROJECT NUMBER: 767203

ITEM	NO. REQ.	P&ID LABEL	DESCRIPTION AND SPECIFICATIONS	PART NUMBER	SERIAL NUMBER
	AIR STRIPPER				
27	1		TurboTray™ AIR STRIPPER SUMP, 24" DIA.	130-0615	
28	1		TurboTray™ AIR STRIPPER TOP, 24" DIA.	130-0620	
29	4		TurboTray™ AIR STRIPPER TRAY, 24" DIA.	130-0625	
30	4		STRAPS FOR HT-240, 4 TRAY TurboTray™ AIR STRIPPER		
31	4		LATCHES FOR TurboTray™ AIR STRIPPER	150-0008	
32	1		CLEAR WELL	50-0009	
33	1	ME-1	MIST ELIMINATOR, 12" (HT-240)	130-0036	
34	1	B-1	BLOWER MOTOR, 3 HP, 240 VAC, 1 PH, 1 1/8" SHAFT, 182T, 3450 RPM TEFC		DCF396
35	1	B-1	AF-15 DAMPER	130-0202	
36	1	B-1	AF-15 BLOWER	130-0200	
37	1	B-1	BLOWER BASE STEEL (AF-15)	130-0204	
38	4	B-1	BLOWER BOLTS	11-0009	
39	1	B-1	INLET SCREEN, 8"	130-0580	
40	1	B-1	AF-15 1105 FAN BLADE, 1 1/8"	130-0203	
41	1		RUBBER TRANSITION, 6" X 8"	130-0490	
42	50		50 MICRON BAG FILTERS FOR FSI-2L		
43	1		1.5" DIA. X 15' PETROLEUM GRADE HOSE		
	TRANSFER PUMPS				
44	1	P-1	TRANSFER PUMP, GRUNDFOS CR4-20/1 U 3/4 HP 240 VAC 1 PHASE, 3450 RPM, 56C FRAME TEFC		DCF792
45	1	P-2	GRUNDFOS BOSS SUMP PUMP 300 SERIES, 1/2 HP, 120VAC, 1 PHASE		

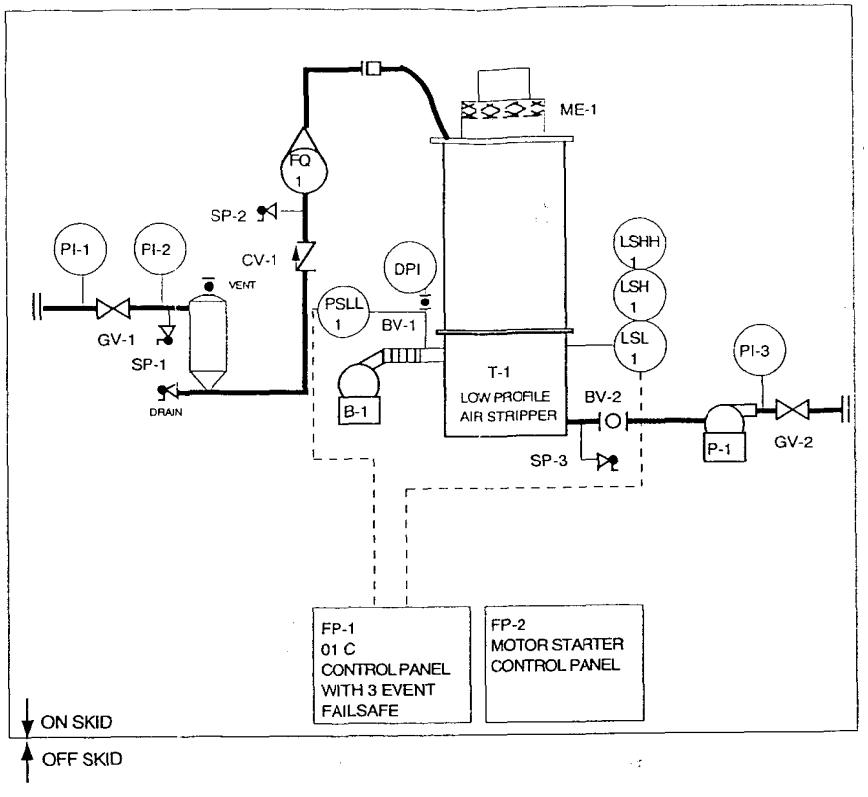

NOTE:
A) SYSTEM FLOW RATE IS 20 GPM
B) NON CLASSIFIED DESIGN
C) SKID SIZE 4' X 6'
D) PROCESS PIPING IS 2" INLET, 2" DISCHARGE, SCH80 PVC
E) OFF SKID PIPING BY OTHERS
F) 240 VAC, SINGLE PHASE

DATE	BY	REVISION

NEPCCO

2140 N. E. 36TH AVE.
SUITE 100
OCALA, FL 34470

PREPARED FOR:
MORRISON-KNUDSEN CORP.

PROJECT NAME:
NSWC CRANE

CUST. NUMBER
A/S

TITLE:
WATER TREATMENT P&ID

DRAWN BY:	CHECKED BY:
BBK	
ENG. APPROVAL	QA APPROVAL
DATE: 4/25/96	SIZE
DRAWING NO. 767203-2-01	SCALE

SHEET 1 OF 6

LEGEND:

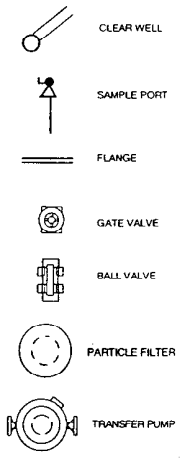

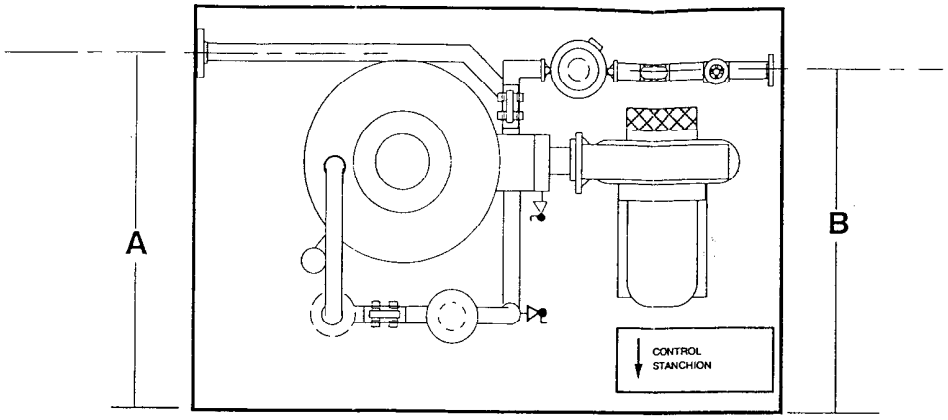

	L	W	H	DIA	HP	VOLTAGE	PHASE	GAL	CFM	GPM	NEMA	
SKID SIZE	6'	4'	4"									
CONTROLS						240	1				4	
O/W SEPARATOR												
LOW PROFILE A/S			76"	24"					265	27		
PACKED COLUMN												
BLOWER					3	240	1		265			
SUMP PUMP					.5	120	1			20		
SURGE TANK												
TRANSFER PUMP					.75	240	1			20		
FLOW TOTALIZER				1.5"								

1.) INFLUENT A = 41" AND EL = 8 1/4" TO GRADE (MEASUREMENTS ±1")

2.) EFFLUENT B = 41" AND EL = 8 1/4" TO GRADE (MEASUREMENTS ±1")

DATE	BY	REVISION

NEPCCO

2140 N. E. 36TH AVE.
SUITE 100
OCALA, FL 34470

PREPARED FOR:
MORRISON-KNUDSEN CORP.

PROJECT NAME:
NSWC CRANE

CUST. NUMBER
A/S

TITLE:
AS BUILT LAYOUT DRAWING

DRAWN BY: BBK
CHECKED BY:
ENG. APPROVAL DH
QA APPROVAL
DATE: 4/25/96
SIZE
DRAWING NO. 767203-4-01
SCALE

SHEET 2 OF 6

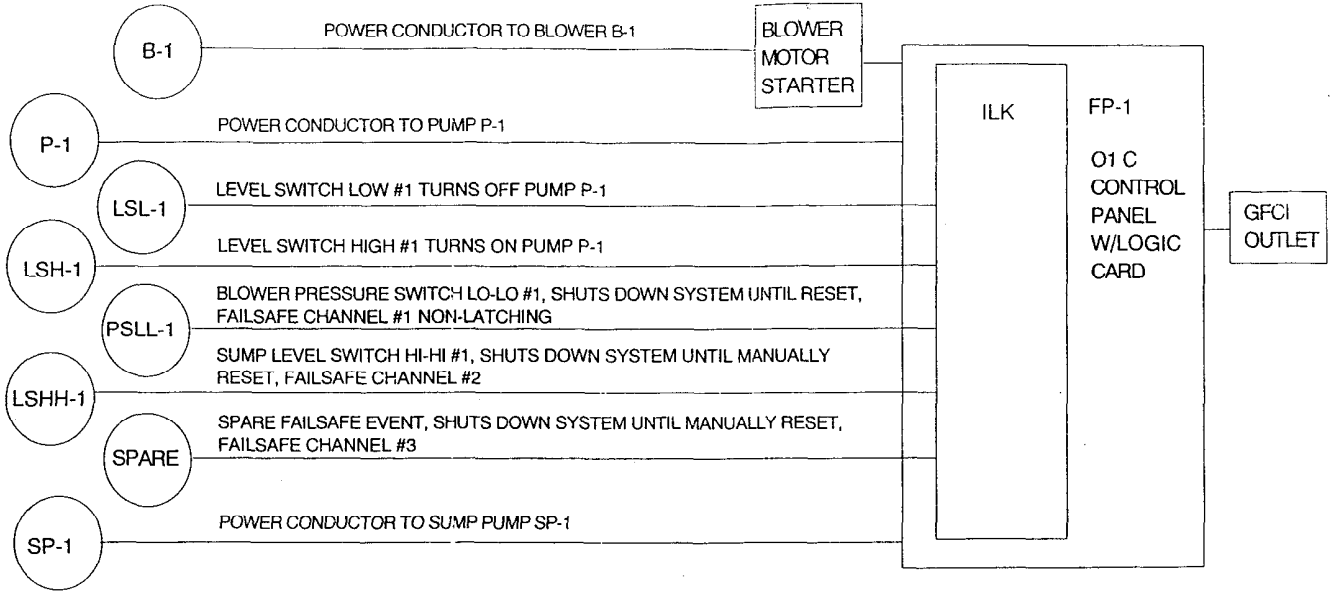

DATE	BY	REVISION

NEPCCO

2140 N. E. 36TH AVE.
SUITE 100
OCALA, FL 34470

PREPARED FOR:
MORRISON-KNUDSEN CORP.

PROJECT NAME:
NSWC CRANE

CUST. NUMBER
A/S

TITLE:
ELECTRICAL LOGIC DRAWING

DRAWN BY:	CHECKED BY:
BBK	DH
ENG. APPROVAL	QA APPROVAL
DATE: 4/25/96	SIZE
DRAWING NO. 767203-6-01	SCALE

SHEET 3 OF 6

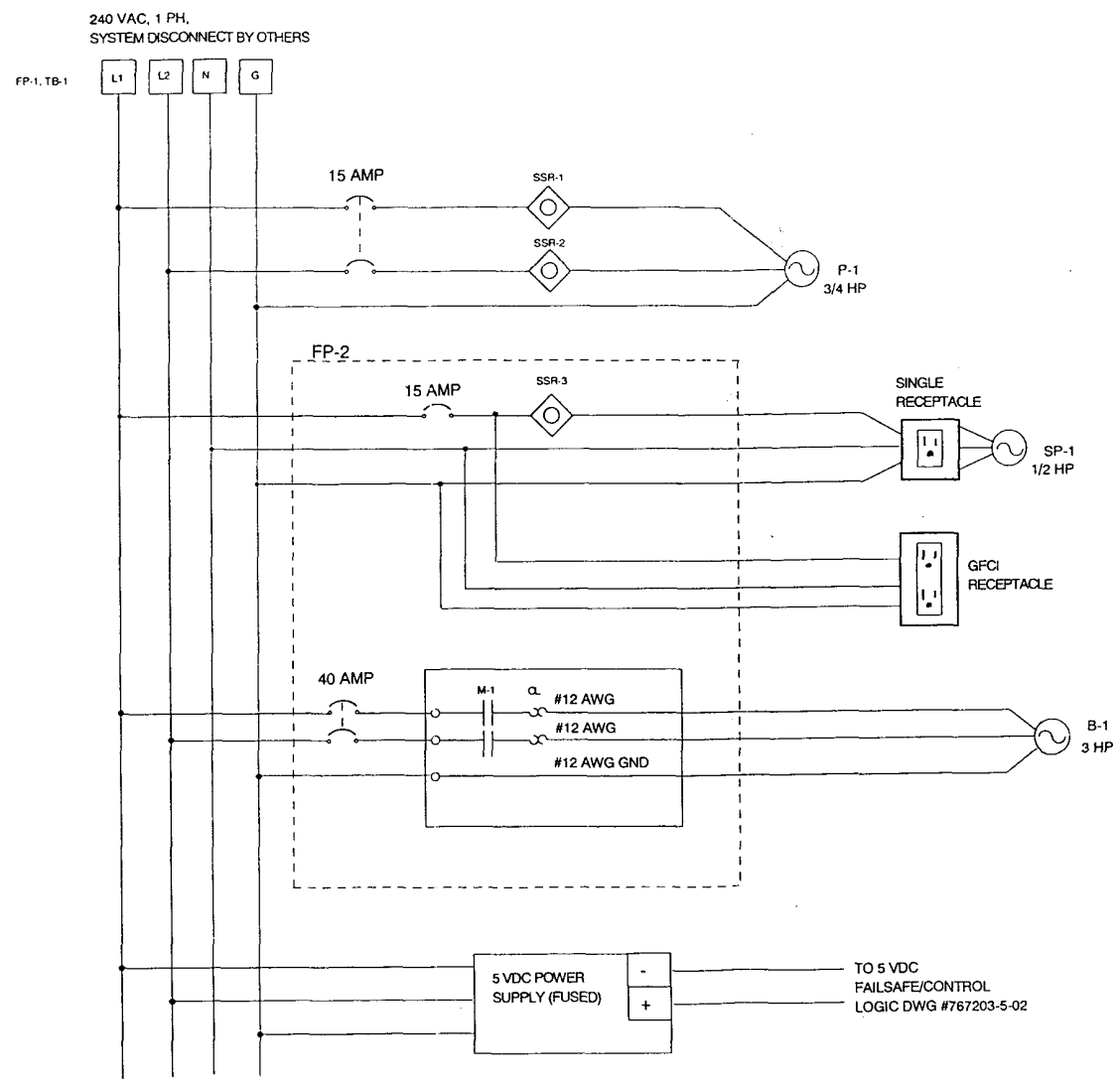

DATE	BY	REVISION

NEPCCO

2140 N. E. 36TH AVE.
SUITE 100
OCALA, FL 34470

PREPARED FOR:
MORRISON-KNUDSEN CORP.

PROJECT NAME:
NSWC CRANE

CUST. NUMBER
A/S

TITLE:
ELECTRICAL WIRING DIAGRAM

DRAWN BY: BBK
CHECKED BY:

ENG. APPROVAL
QA APPROVAL

DATE: 4/26/96
SIZE

DRAWING NO. 767203-5-01
SCALE

SHEET 4 OF 6

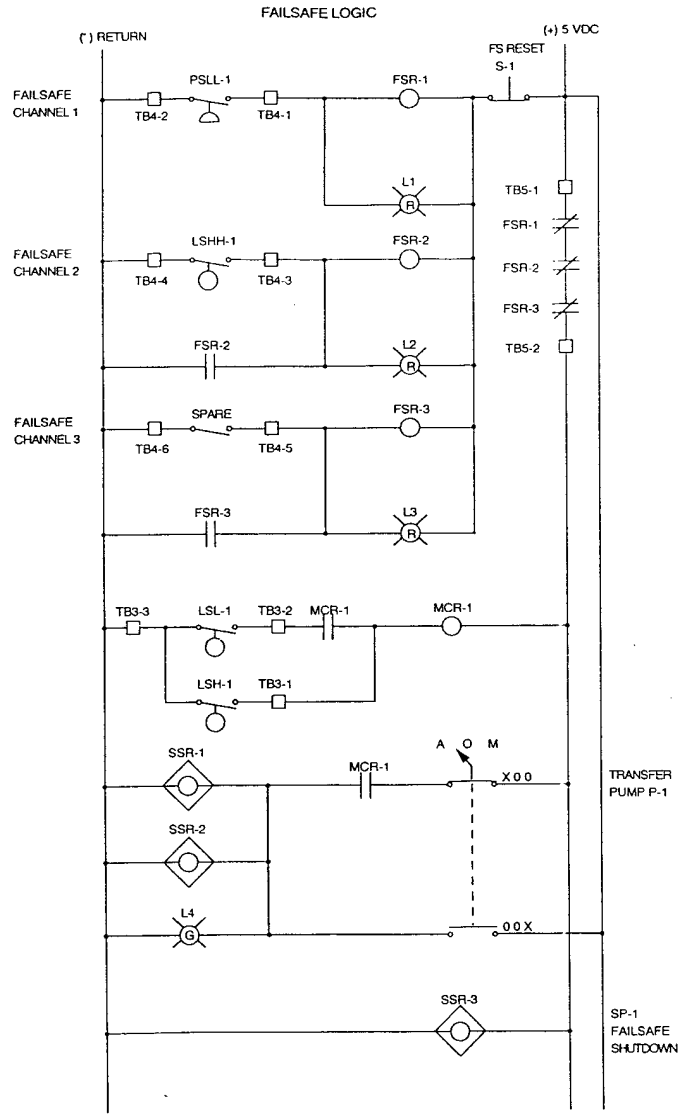

DATE	BY	REVISION

NEPCCO

2140 N. E. 36TH AVE.
SUITE 100
OCALA, FL 34470

PREPARED FOR:
MORRISSON-KNUDSEN CORP.

PROJECT NAME:
NSWC CRANE

CUST. NUMBER

TITLE:
LADDER LOGIC/ POWER WIRING DIAGRAM

DRAWN BY:	CHECKED BY:
DH	
ENG. APPROVAL	QA APPROVAL
DH	
DATE: 05/24/96	SIZE B
DRAWING NO. 767203-5-02	SCALE NTS

SHEET 5 OF 6

LOAD	A PHASE	B PHASE	NEUTRAL	
B-1X 1.25	21.25	21.25		
PUMP P-1	6.9	6.9		
POWER SUPPLY	1	1		
GFCI	5		5	
SUMP PUMP SP-1	9		9	
TOTAL	43.15	29.15	14	

DATE	BY	REVISION

NEPCCO

2140 N. E. 36TH AVE.
SUITE 100
OCALA, FL 34470

PREPARED FOR:
MORRISON-KNUDSEN

PROJECT NAME:
NSWC CRANE

CUST. NUMBER
A/S

TITLE:
LOAD SUMMARY DRAWING

DRAWN BY:	CHECKED BY:
BBK	
ENG. APPROVAL	QA APPROVAL
DATE: 4/26/96	SIZE
DRAWING NO. 767203-7-01	SCALE

SHEET 6 OF 6

PIPING

- Major Process Line
- Secondary Process Line
- Air Line
- Flange and Mate
- Union
- Orifice
- Quick Disconnect
- Reducer
- Expansion Joint
- Drain Plug
- Diaphragm Isolator
- Line list
- Direction of Flow
- Entry and Exit Flow

VALVES

B V	Ball Valve, Open
B V	Ball Valve, Closed
G L V	Globe Valve, Open
G L V	Globe Valve, Closed
C V	Check Valve
G V	Gate Valve, Open
G V	Gate Valve, Closed
B F V	Butterfly valve
S V	Solenoid Valve
S V	3 Way Solenoid Valve
S P	Sample Port

VALVES

P R V	Pressure Regulating Valve
S R V	Safety Relief Valve
V R V	Vacuum Relief valve
M	Motorized Valve Actuator

PUMPS & BLOWERS

P	Transfer Pump
P	Pneumatic Submersible Pump (DELIVERY, AIR)
P	Electric Submersible Pump
P	Metering Pump
P	Double Diaphragm Pump
P	Gear Pump
P	Peristaltic Pump
B	Centrifugal Blower
B	Rotary Lobe Blower

COMPONENTS

	North Arrow
X	Item Label
	Pitot Tube Velocity Measurement
P F	Particulate Filter Gas or Liquid
B S	Basket Strainer
A L	Alarm Light
	Flame Arrestor
ME	Mist Eliminator
	Muffler
A W S	Air Water Separator
F Q	In-Line Flow Totalizer
FI	Flow Indicator (Rotameter)
FI	Flow Indicator (vane)

ELECTRICAL

	Electrical Line
E I	Panel Light
H S, O O A	Hand Switch On / Off / Auto
	Field Device
F S,	Flow Sensor
LSHH,	Level Sensor HI - HI
LSH,	Level Sensor High
LSL,	Level Sensor Low
LSLL,	Level Sensor LO - LO
PI,	Pressure Indicator
PSHH,	Pressure Sensor HI - HI
PSLL,	Pressure LO - LO
PT,	Pressure Transmitter
dPI,	Differential Pressure Indicator
TI	Temperature Indicator

LABELS

G A C -	Granulated ActivatedCarbon
F I -	Flow Indicator
F P -	Field Panel
F S -	Flow Switch
F Q -	Flow Totalizer
I L K -	Sensor Interlock
M -	Motor
P D -	Power Disconnect
P E -	Pressure Element
P T -	Port Hole
T -	Tank
T M -	Telemanager

NEPCCO

Title SYMBOLS AND ABBREVIATIONS

Dwg No ES-1-010-030 Date 12/20/95

Approved Eng William M. Chamberlin

Approved QA

TurboTray™ HT-244

NEPCCO

OPERATION AND MAINTENANCE MANUAL

FOR

TURBOTRAY™ LOW PROFILE AIR STRIPPER SYSTEMS

TURBOTRAY™ LOW PROFILE AIR STRIPPER SYSTEM

CONGRATULATIONS! You are now the owner of a NEPCCO High Turbulence low profile air stripper system. The system has undergone a rigorous in house test, which has met NEPCCO standards. However, a visual check of the unit should be done after unpacking and before implementation of the system. Thank you for your interest in our family of products. Should you need assistance, please call our customer support line,1-800-277-3279.

1.0 THEORY OF OPERATION

The NEPCCO HT series are high efficiency low profile air strippers used for removal of volatile organics from water. The system includes an integral input equalization chamber, multiple aeration trays and a pump out chamber. The multiple trays allow maximum efficiency under wide variations in flow rate. Flow rates from 0 to 80 gpm can be accommodated.

2.0 STANDARD DESIGN FEATURES

- The HT low profile air stripper is a pre-packaged, ready to install, cylindrical unit.
- Inlet equalization chamber to disperse flow and collect solids
- Aeration trays utilizing high efficiency venturi plates
- Outlet chamber to permit gravity or pump out discharge with optional multilevel control
- Liquid level sight tube
- Closed top with vent connection
- Easy access to all trays of the aeration unit for maintenance
- Large capacity blower assembly to provide air to the aeration trays
- The HT series features FRP construction.
- The entire external surface of the unit is covered with a continuous layer of chemically resistant, ultraviolet stabilized, polyester gelcoat.
- All pipes and fittings in the unit are constructed of schedule 80 PVC.

3.0. INSTALLATION

The HT series air stripper should be placed on a flat level surface such as a concrete pad. The influent and effluent are flanged and mating flanges are provided with the unit.

The blower assembly should be located near the air inlet of the unit to allow a short ducting connection to the air inlet. Flexible ducting is provided and should be used to minimize any vibrations between the blower and the unit. Clamps are provided for a proper seal between the blower and the air inlet.

The electrical connection to the blower motor should be in accordance with local electrical codes. The motor should be protected with short circuit protection and thermal overload protection.

A hose barb is provided on the air inlet of the unit for easy connection to a pressure switch. The switch provides a dry contact in the event of a blower failure for integration into a failsafe or alarm system.

4.0 OPERATION AND MAINTENANCE

The NEPCCO TurboTray low profile air stripper systems are fully automatic and require no operator assistance for normal operation. A properly installed system will only require periodic preventative maintenance to sustain efficient operation.

Operation is started by filling the striper sump with clean potable water to the middle of the liquid level sight tube on the side of the sump. Once the water level is attained, start the blower. Initial air flow should be unrestricted. Air flow dampers or inlet cutoffs should be opened to their maximum position. After the blower has reached its operating speed start the influent water to the stripper. When the water flow has stabilized, the air flow to the stripper may be adjusted, if necessary.

After 5 minutes of operation, open the sample ports on each tray to ensure that the trays are filled with water. Maximum volatile organic compound (VOC) removal can only be attained with water in each tray and the blower running.

Maximum operating efficiency can only be sustained if regular periodic maintenance inspections are carried out.

A) Check blower air inlet screen and clear any trash buildup (ie, leaves, paper, etc.).
B) Check blower and blower motor bearings; lubricate as necessary.
C) Check electrical performance of blower motor (temperature of operation, current draw, etc.)
D) Check the aeration trays for any buildup of solids.

Cold weather protection should be provided for all piping to avoid freezing. For areas where extended periods can occur at freezing temperatures or below, the stripper should be wrapped with an electrical heat tape and then overwrapped with an insulating blanket.

Periodic cleaning of the stripper, to minimize biological growth or solids buildup, can be done with a mild 3% hydrochloric acid solution or with a 5 to 10% sodium hyperchlorite solution. Frequency of cleaning and duration, if necessary at all, will be site specific. Local requirements for discharge/disposal of such cleaning solutions will vary.

Please contact NEPCCO at 1-800-277-3279 if you have any questions.

5.0 OPTIONS

- Available in 18", 24", 36", 48" or 60" diameter
- Effluent pump out package to remove treated water
- Vapor discharge stack
- Mist eliminator
- Air inlet filter for the blower
- Explosion-proof electrical design

2933 SYMMES ROAD, FAIRFIELD, OHIO 45014
PHONE: (513) 874-2400 TELEFAX: (513) 874-4096

AMERICAN FAN CO. INSTALLATION, OPERATION, AND MAINTENANCE MANUAL SM 844

This general manual has been prepared to assist you in installing and maintaining your American Fan equipment. By following the general instructions presented, you will prolong the life of the equipment, while preventing unexpected downtime.

The scope of this manual covers our standard product line and is not intended to cover specially engineered equipment.

INDEX

Page No.

Section I
- Receiving 2
- Extended Storage 2
- Handling 2
- Installation 2

Section II
- Before Start-Up 3
- Start-Up 3
- Start-Up Of High Temperature Construction Fans & Blowers 3

Section III
- General Maintenance 4
- Fan Bearing Maintenance 4
- Motor Maintenance 5
- V-Belt Drive Maintenance 5

Section IV
- Problem Troubleshooting 6
- Ordering Spare Parts 6

Section V
- Warranty 7

SECTION I

RECEIVING

All shipments are F.O.B. factory, Fairfield, Ohio. It is, therefore, in the interest of the buyer to carefully inspect all shipments before they are accepted from the freight carrier. Upon delivery, be sure that all items listed on the bill of lading and packing list (inserted in the plastic envelope attached to the shipment) have been received. Partial shipments are sometimes made.

Units are usually completely assembled except when specifications call for unit less motor. They are then skidded, boxed or crated to fully comply with rail or trucking requirements for shipment.

Accessories are sometimes shipped separately due to handling and space requirements.

Even though all equipment is carefully inspected and prepared for shipment at the factory, rough handling enroute may cause damage to fan and/or drive parts.

Any shortage, breakage or damage noticed at time of delivery should be indicated to the carrier's representative. Damage noticed after delivery should be reported to the carrier at once. Request their inspection of the shipment and fill out a concealed damage inspection report.

EXTENDED STORAGE

Units shipped to customer which will be held in storage for a period of up to two years should have special provisions so operation-readiness can be maintained. Motors should be equipped with internal space heaters kept on continuously. Units should be crated and covered with polyethylene film. In addition, impellers should be hand-rotated once a month. For best results, keep units sheltered in a cool, dry location.

HANDLING

Small units should be handled carefully and lifted only by the base, never by the shaft, coupling, motor or housing. Larger units should also be lifted by the base or by lifting eyes, if provided. Precaution should be taken to avoid dropping or jarring equipment as this can cause damage to the shaft or wheel which is not visibly noticeable, but can cause vibration problems.

INSTALLATION

Fans and motors should be mounted on structurally sound foundations. Concrete is the best, however, other types designed properly are acceptable. Equipment should be leveled on the foundation and be shimmed or grouted in place. This will prevent putting the fan structure into a bind by bolting down on an uneven surface.

As a general rule, if vibration isolators are used, the fan should first be bolted to a structural steel base and the isolation take place between the structural steel base and the foundation. This prevents the fan base from "floating" due to uneven weight distribution and/or drive forces when mounted directly to vibration isolators.

SECTION II

BEFORE START-UP

1. Fasteners - all foundation bolts, wheel hub set screws, wheel locking bolts and bearing locking collars must be tight.
2. Bearings - check bearing alignment and make certain they are properly lubricated.
3. Fan Wheel - turn over rotating assembly by hand to see that it runs free and does not bind or strike fan housing. If wheel strikes housing, the wheel may have to be moved on the shaft or the bearing pillow blocks moved and reshimmed.
4. Motor - check electrical wiring to motor. The current characteristics of the supply line must agree with the motor nameplate rating. Motor should be wired and fused in accordance with the National Electric Code and local codes.
5. V-belt drive must be in alignment with belts at proper tension.
6. Duct Connections (if required) from fan to duct work must not be distorted. Ducts should never be supported by the fan. Expansion joints between duct connections should be used where expansion is likely to occur or where fan is mounted on vibration isolators. All duct joints should be sealed to prevent air leaks. All debris should be removed from ductwork and fan.

START UP

1. "Jog" the motor to check for proper wheel rotation. The motor should be started in accordance with the manufacturer's recommendations. Arrows on fan indicate the proper direction of rotation and air flow.
2. Fan may now be brought up to speed. Watch for anything unusual such as vibration, overheating of bearings and motors, etc. Check fan speed on V-belt driven units and adjust motor sheave (on adjustable drives) to give desired RPM.
3. Check motor amperage against nameplate amperage to make sure motor is not overloading.

START-UP OF HIGH TEMPERATURE CONSTRUCTION FANS AND BLOWERS

In addition to normal start-up procedure described above, certain measures must be taken against thermal expansion deformation.

1. Fan or blower should be brought to speed between 50°F and 120°F. It may be necessary to throttle back air entering fan or blower and slowly bleeding in heated air to accomplish this. (Note: if motor horsepower is sized for high temperature operating condition and not cold start-up, throttling inlet air will be mandatory to prevent motor overloading. It is recommended motor amperage be monitored during this procedure.)
2. The maximum rate of temperature rise allowable is 15°F per minute.
3. The reverse situation of fan or blower shut-off also applies. That is, the temperature must be lowered slowly before turning fan or blower off to prevent damage.

SECTION III

GENERAL MAINTENANCE

1. A definite time schedule for inspecting all rotating parts and accessories should be established. The frequency of inspection depends on the severity of operation and the locality. Inspections might be weekly at first in order to set up the schedule.
2. Alignment - shaft must not be cocked in the bearings. Misalignment can cause overheating, wear to dust seals, bearing failure and unbalance.
3. Hardware - check tightness of all bolts and set screws.
4. Lubrication - check fan and motor bearings and add lubricant if necessary. Be careful not to overgrease as this can damage bearing seals.
5. Air flow - make sure there are no obstructions to air flow in outlet or inlet ductwork.
6. Bearings on high speed fans tend to run hot. Therefore, do not replace a bearing because it feels hot to the touch. Place a pyrometer or contact thermometer against the pillow block and check the temperature.

   Ball pillow blocks can have total running temperatures of 165°F (74°C) before the cause of overheating be investigated.
7. Wheel - inspect wheel blades for accumulation of dust and dirt. Clean thoroughly with stream of water jet, compressed air or a wire brush. This will help prevent an unbalanced condition. If blades are aluminum, be careful not to damage them. Cover the bearings so water won't enter the pillow block. The wheel should be centered to prevent the blades from striking the housing. Make sure wheel is rotating in proper direction. Never run the fan at a higher speed than it was designed for unless you check with American Fan first.

FAN BEARING MAINTENANCE

For most applications, a lithium base grease conforming to a NLGI grade 2 consistency should be used. This type of grease inhibits rust, is water resistant, and has a temperature range of -30°F to 200°F with intermittent highs of 250°F.

Because oil lubricated bearings are usually used on high-speed or high-temperature applications, refer to American Fan for the type of oil you should use in your particular application.

When greasing bearings it is important not to overgrease. This is especially true if the bearings are equipped with extended grease lines and the bearings are not visible. In this case, more bearing failures occur due to overgreasing than undergreasing. It is best to give the bearing just one "shot" of grease periodically, when the bearings are not visible. When the bearings are visible, pump in grease until a small bead of grease forms around the bearing seals. It is very important that fan bearing greasing take place while the fan is operating. Caution should be taken while working on and near rotating equipment to avoid personal injury.

When oiling oil-lubricated bearings, oil should be poured into cup at top of bearing until it reaches the overflow point at the lower oil cup.

MOTOR MAINTENANCE

Lubricate motor bearings to the manufacturer's recommendations. Lubrication recommendations are printed on tags attached to the motor. Should these tags be missing, the following will apply:

A. Fractional Horsepower Sleeve Bearing Motors:
Under normal operation at ordinary temperatures and clean surroundings, these motors will operate for three years without relubrication. Then lubricate annually with electric motor oil or SAE 10 oil. Under continuous operation at higher temperatures (but not to exceed 104°F ambient) relubricate annually.

B. Fractional Horsepower Ball Bearing Motors:
Under normal conditions, ball bearing motors will operate for five years without relubrication. Under continuous operation at higher temperatures (but not to exceed 104°F ambient) relubricate after one year. To relubricate where motors are not equipped with pressure fittings, disassemble motor and clean the bearings thoroughly. Repack each bearing one-third full with ball bearing grease.

C. Integral Horsepower Ball Bearing Motors:
Motors having pipe plugs or grease fittings should be relubricated while warm and at stand-still. Replace one pipe plug on each end shield with grease fitting. Remove other plug for grease relief. On low pressure, grease, run and lubricate until new grease appears at grease relief. Allow motor to run for ten minutes to expel excess grease. Replace pipe plugs. Motors not having pipe plugs or grease fittings can be relubricated by removing end shields, cleaning grease cavity and refilling three-fourths of circumference of cavity.

Recommended relubrication intervals-general guide only.

H.P. Range	Standard Duty 8 Hr./Day	Severe Duty 24 Hr./Day Dirty-Dusty	Extreme Duty Very Dirty High Ambients
1½-7½	5 Yrs.	3 Yrs.	9 Mos.
10-40	3 Yrs.	1 Yrs.	4 Mos.
50-150	1 Yrs.	9 Mos.	4 Mos.

These ball bearing greases or their equivalents are satisfactory for ambients from -15°F. For Motors:

Mobilplex EP#1—Socony Mobil Oil Company
Alvania Grease #2—Shell Oil Company
Andox B Grease—Esso Standard Oil Company
Prestige #42 Grease—Sun Oil Company

V-BELT DRIVE MAINTENANCE

If belts squeal at start-up, they are too loose and should be tightened. Periodically, check belt and sheave wear, alignment, and tension. When belts show wear, replace all belts at once with a new matched set of belts. New belts will not work properly in conjunction with used belts due to difference in length. Belts and sheaves should be clean and free from grease. After installing new belts, check tension midway between sheaves. Belts should deflect about 1/64" per inch of span length with approx. 20 lb. force. Allow unit to run for 4-6 hours, then it will be necessary to re-tighten belts again because new belts tend to stretch initially.

SECTION IV

PROBLEM TROUBLESHOOTING

In the event that trouble is experienced in the field, listed below are the most common fan difficulties. These points should be checked in order to prevent needless delay and expense of factory service.

1. CAPACITY OR PRESSURE RATING
   A. Total resistance of system higher than anticipated.
   B. Speed too low.
   C. Dampers or variable inlet vanes not properly adjusted.
   D. Poor fan inlet or outlet conditions.
   E. Air leaks in system.
   F. Damaged wheel.
   G. Incorrect direction of rotation.
   H. Wheel mounted backwards on shaft.

2. VIBRATION & NOISE
   A. Misalignment of bearings, couplings, wheel, or V-belt drive.
   B. Unstable foundation, fan bolted to uneven foundation, not shimmed or grouted.
   C. Foreign material in fan causing unbalance.
   D. Worn bearings.
   E. Damaged wheel or motor.
   F. Broken or loose bolts and set screws.
   G. Bent shaft.
   H. Worn coupling.
   I. Fan wheel or driver unbalanced.
   J. 120 cycle magnetic hum due to electrical input. Check for high or unbalanced voltage.
   K. Fan delivering more than rated capacity.
   L. Loose dampers or variable inlet vanes.
   M. Speed too high or fan rotation in wrong direction.
   N. Vibration transmitted to fan from some other source.

3. OVERHEATED BEARINGS
   A. Too much grease.
   B. Poor alignment.
   C. Damaged wheel or driver.
   D. Bent shaft.
   E. Abnormal end thrust.
   F. Dirt in bearings.
   G. Excessive belt tension.

ORDERING SPARE PARTS

Contact the local American Fan representative or the factory and supply the following information:

1. Fan serial number stamped on nameplate.
2. Fan code and model stamped on nameplate.
3. Fan arrangement.
4. Description of part required.
5. Part number if part is a casting.
6. Special paints or coatings.

WHEEL—Be sure to indicate direction of rotation as viewed from drive side. type of wheel and the operating speed.

SHAFT—Length and diameter.

MOTORS—The name of the motor manufacturer and the motor model number from the motor nameplate must be supplied to the factory for repairs or replacement.

BEARINGS—The following information should be indicated when ordering various types of bearings:

ANTI-FRICTION BEARINGS
1. State whether ball or roller.
2. Manufacturer
3. Size and number
4. Fixed or floating

RECOMMENDED SPARES:
1. V-belts on V-belt driven fans
2. Fan bearings
3. Wheel (s)
4. Motor (if blower is critical to your operation.)

SECTION V

AMERICAN FAN COMPANY WARRANTY

1) "The Seller hereby warrants the equipment to be free from defects in materials and workmanship under normal use and service. the obligations hereunder being limited to making good at Seller's plant F.O.B. any part or parts thereof manufactured by Seller which shall within twelve (12) months from the date of shipment to the original purchaser be returned to Seller with transportation charges prepaid and which on examination by Seller shall disclose to Seller's satisfaction defects. This warranty shall be the only warranty by Seller covering this equipment or the parts thereof and shall be in lieu of all other warranties either expressed or implied. Buyer waives all claims for defects in material and workmanship unless said claim be made in writing and received by Seller within ten (10) days after the discovery thereof. This warranty shall cover only the cost of correcting defects in the equipment or parts thereof and Seller shall not be responsible for damages either proximate or consequential arising out of use. operation or possesion of said equipment or the parts thereof by Buyer or any other parties. The Seller shall not be responsible for work done. equipment or parts furnished or repairs made by others. for any loss or expense arising from such work. equipment parts or other repairs unless the same is done or furnished with the prior written consent and approval of the Seller. Seller shall under no circumstances be liable for the cost of raw materials used or lost in testing or experimental operations of any equipment sold or other such testing or experimentation to be done under the supervision of a representative of the Seller or of any employee or other representative of the Buyer."

2) Warranties on purchased material are limited to terms of warranty furnished by our suppliers.

3) We do not guarantee against abrasion. corrosion or erosion.

BALDOR

INSTALLATION - MAINTENANCE INSTRUCTIONS

The safety of personnel depends upon following these instructions:

RECEIVING:

Inspect machine before accepting shipment for any damage in transit. Shaft should turn by hand without any rubs. Any damage from transit should be reported to the carrier immediately.

INSTALLATION

Qualified or trained personnel should install the machine. Electrical rotating equipment can result in property damage, serious injury, or death, when improperly installed. Equipment should be installed in accordance with the National Electrical Code, local codes and with NEMA MG2, Safety Standards for Construction and Guide for Selection, Installation and Use of Electric Motors and Generators.

WARNING: Observe the following for safety:

1. When eyebolts are provided, they are intended only for lifting the motor and its included motor accessories. Eyebolt must be fully tightened.
2. The machine must be grounded in accordance with the National Electrical Code and any local code.
3. Permanently guard machine against accidental contact of body parts or clothing with moving parts.
4. Shaft key must be secured before starting motor.
5. The machine should match the line voltage, line frequency, and the equipment load.
6. Applications for motor-mounted brake should have proper safeguards provided for personnel in case of possible brake failure.
7. Remove all power services and allow machine to reach standstill prior to servicing.
8. On single phase motors discharge start and/or run capacitors prior to servicing.
9. Do not by-pass or render inoperative safeguard or protective devices.

MOTOR ENCLOSURE

Open drip proof motors are intended for use in clean, dry locations with access to an adequate supply of cooling air. In addition, there should be protection from or avoidance of flammable or combustible materials in the area of open-type motors as they can eject flame and/or molten metal in the event of an insulation failure. **Totally enclosed motors** are intended for use where moisture, dirt, and/or corrosive materials are present in indoor or outdoor locations. **Explosion-proof motors**, as indicated by the Underwriters Laboratories, Inc. label, are required for hazardous locations in accordance with the National Electrical Code.

MOUNTING

Foot mounted machines should be mounted to a rigid foundation to prevent excessive vibration. Shims may be required if foundation is uneven.

Flange mounted machines should be properly seated and aligned. **NOTE:** If improper direction of rotation is detrimental to the load, check rotation prior to connecting the motor to the load.

For V-belt drive, mount the sheave (pulley) close to the motor housing, however, allow clearance for end to end movement of shaft. Do not overtighten belts as this may cause premature bearing failure and/or shaft breakage.

Direct coupled machines should be carefully aligned and shaft should turn freely without any binding.

WIRING

Connect the machine in accordance with furnished connection diagram. The wiring, fusing, and grounding must be in accordance to the National Electrical Code and any local codes.

When the machine is connected to the load for proper direction of rotation and started, it should start quickly and run smoothly. If this is not the case, immediately shut motor off. Investigate the cause. The cause could be: low voltage, the motor is misconnected, or the load is too great, etc.

It is recommended that the motor current be checked after it has been operating a short time and compared against nameplate current.

LUBRICATION

This is a ball bearing motor. The bearings have been given initial lubrication at the factory. Motors without regreasing capability are factory lubricated for normal bearing life.

RELUBRICATION INTERVALS (MOTORS HAVING REGREASING CAPABILITY)

New motors having been in storage for over a year should be relubricated by the procedure noted below. The following relubrication intervals are suggested as a guide for long operating life.

Hours of Service Per Year	Suggested Relube Interval		
	NEMA FRAME SIZE		
	42 to 215T	254 to 326T	364 to 447T
5000 Hrs.	5 yrs.	3 yrs.	1 yr.
Continous Normal Application	2 yrs.	1 yr.	9 months
Seasonal Service Motor is idle for 6 months or more	1 yr. (beginning of season)	1 yr. (beginning of season)	1 yr. (beginning of season)
Continuous high ambients, dirty or moist locations, high vibration, or where shaft end is not roumos-fans)	6 months	6 months	3 months

LUBRICANT

Baldor motors are pre-greased normally with Shell Oil Company's "Dolium R". Several equivalent greases which are compatible with the Baldor furnished grease are Chevron Oil's "SRI No. 2" and Texaco Inc. "Premium RB".

PROCEDURE

Overgreasing bearings can cause premature bearing failure. If motor is equipped with Alemite fitting, clean tip of fitting and apply grease gun. Use 1 to 2 full strokes on motors in NEMA 215 frame and smaller. Use 2 to 3 strokes on NEMA 254 thru NEMA 365 frame. Use 3 to 4 strokes on NEMA 404 frames and larger. On motors having drain plugs, remove grease drain plug and operate motor for 20 minutes before replacing drain plug.

On motors equipped with slotted head grease screw, remove screw and apply grease tube to hole. Insert 2 to 3 inch length of grease string into each hole on motors in NEMA 215 frame and smaller. Insert 3 to 5 inch length on larger motors. Motors having grease drain plugs, remove plug and operate motor for 20 minutes before replacing drain plug.

CAUTION: Keep grease clean. Lubricate motors at standstill. Remove and replace drain plugs at standstill. Do not mix petroleum grease and silicone grease in motor bearings.

Additional copies may be obtained at no charge by writing: Baldor Electric Company, P.O. Box 2400, Fort Smith, Arkansas 72902.

LB5001

PUMPS

The Stainless Steel Sump Pump!

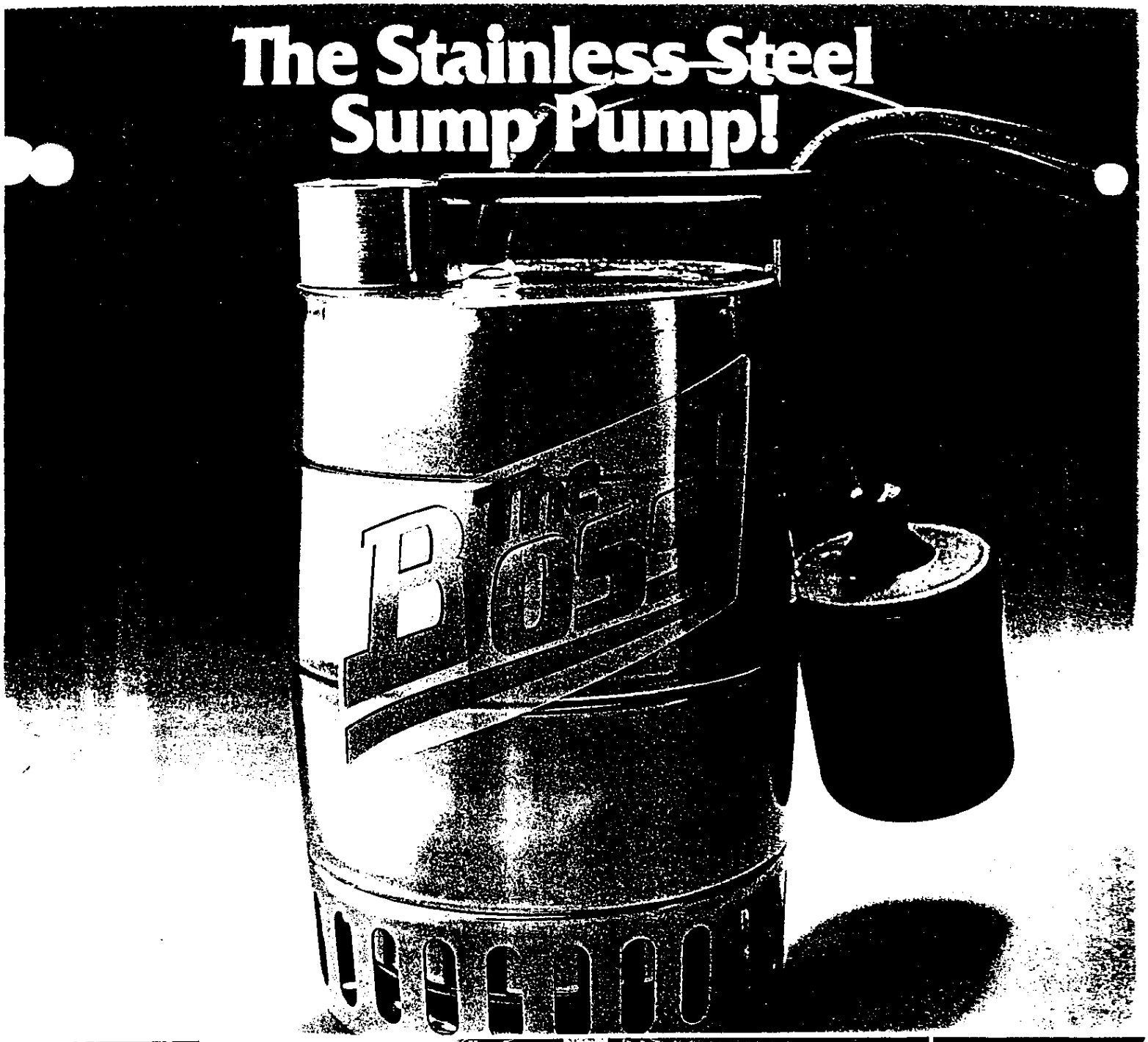

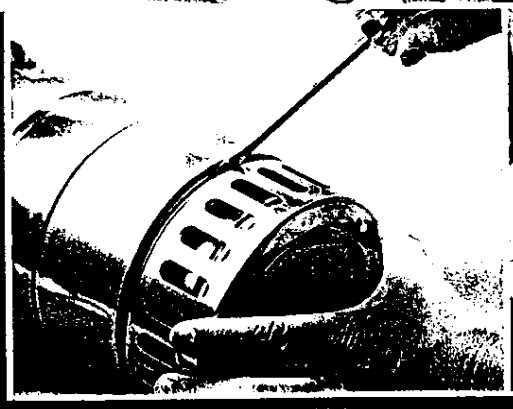

A "snap" to clean and service with just a screwdriver and wrench.

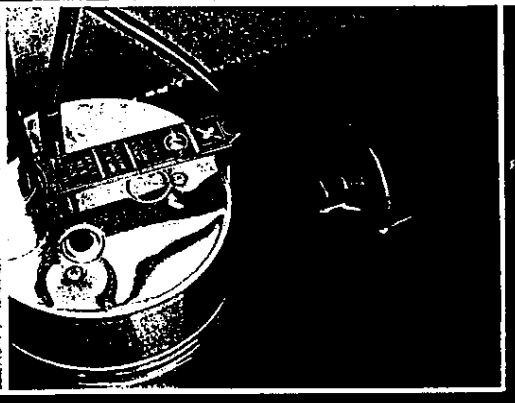

Optional mercury float switch, with piggy-back plug for reliable, automatic operation.

GRUNDFOS®

"You Can't Buy a Better Sump Pump."

Built for years of trouble-free operation.

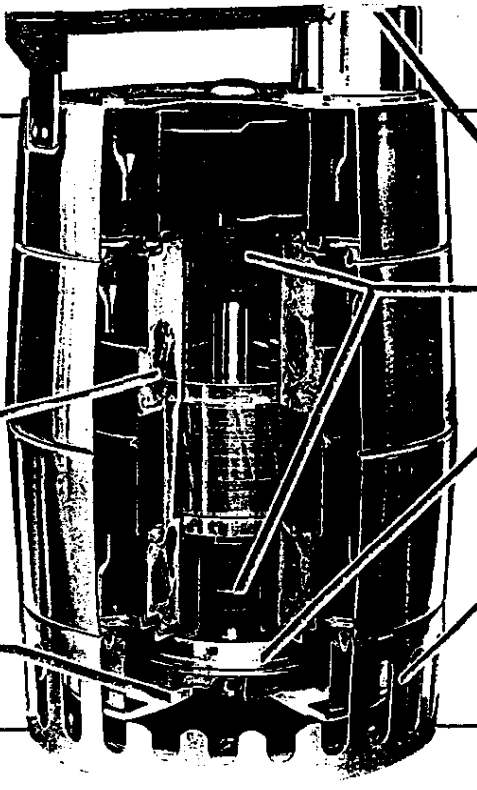

Sturdy Stainless-Steel Construction
including motor, shaft, impeller and pump body.

Water-Lubricated Motor
never needs oiling.

Hermetically Sealed Motor Windings
embedded in polyurethane-sealed in stainless-so they won't short out.

Reversible-Replaceable Wear Plate
for quick and easy service.

Solid Stainless Discharge
resists corrosion and cross-threading.

Extra Long-Life Bearings
heavy-duty special carbon.

Stainless-Steel "Cutter-Vane" Impeller
resists fiber build-up, handles sand and solids up to 3/8 inch.

Stainless Suction Screen
protects impeller, prevents jamming.

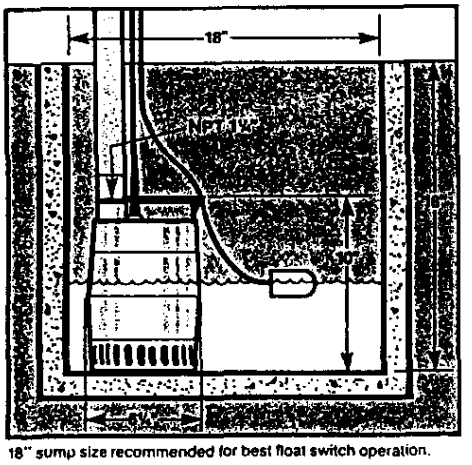

18" sump size recommended for best float switch operation.

Applications:

Use for:

- Clear or dirty sump water.
- Hot water, up to 120°F continuous, 195°F intermittent.
- Greywater and wastewater.
- Draining swimming pools and small excavations.
- Boat bailing.
- Tank circulation or mixing.
- Shallow well water pump.

DO NOT use for:

- Raw sewage.
- Gasoline, oil or other flammables.
- Corrosive liquids.
- Where water temp. exceeds 120°F in continuous operation.
- Applications where pump will run dry.

Dimensions, Weights, Electrical

Model	HP	Volts	Watts	Amps	Shipping Weight (lbs)*	Shipping Carton LxWxH (in)	Packing Vol. (Cu Ft)
The Boss 200	⅓	115	710	6.3	16	10½x6½x12¾	.5
The Boss 300	½	115	920	9.0	17½	10½x6½x12¾	.5

*Not including float switch (1½ lbs)

Performance Table

Model	HP	Total Head										
		4 Ft	6 Ft	8 Ft	10 Ft	12 Ft	14 Ft	16 Ft	18 Ft	20 Ft	22 Ft	24 Ft
		Flow (GPM)										
The Boss 200	⅓	53	47	41	35	28	22	13	5			
The Boss 300	½	72	69	64	60	.56	48	40	33	23	13	2

GRUNDFOS®

Grundfos Pumps Corp. / 2555 Clovis Ave. / Clovis, CA 93612
Distribution Centers: Allentown, PA • Atlanta, GA • Mississauga, Ontario, Canada

KP SL 001 | 12/87
PRINTED IN USA

Series C

Low-Maintenance Multi-Stage Centrifugal Pumps

Installation and Operating Instructions

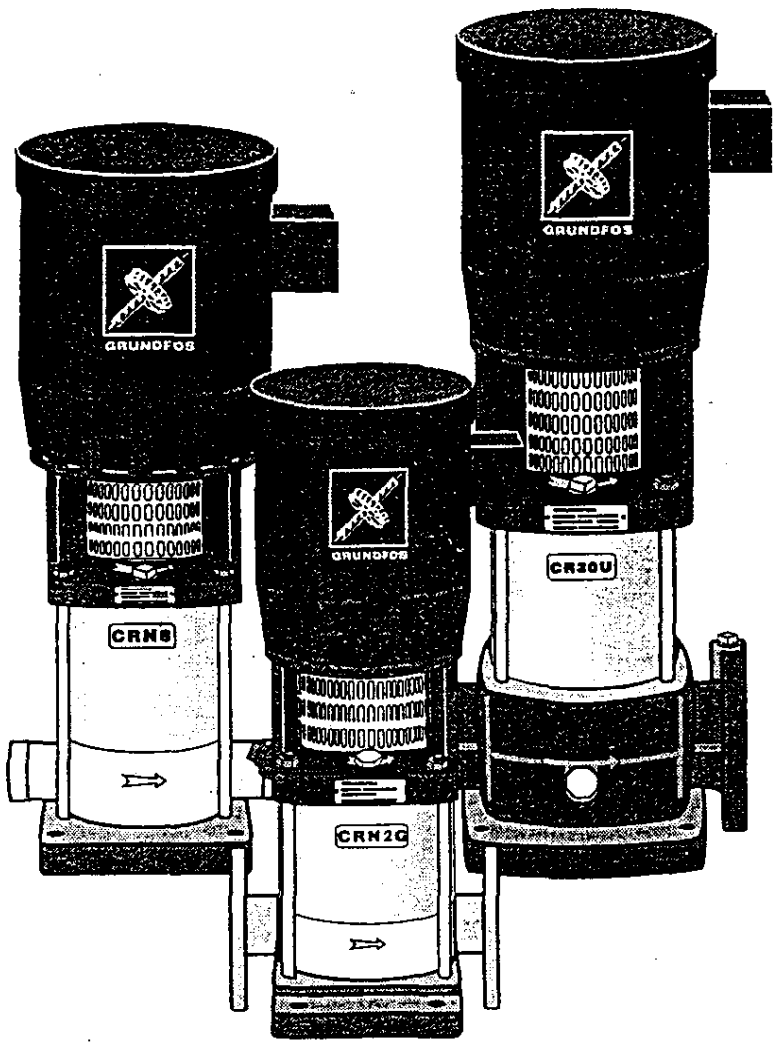

Please leave these instructions with the pump for future reference.

GRUNDFOS

SAFETY WARNING

Electrical Work

All electrical work should be performed by a qualified electrician in accordance with the latest edition of the National Electrical Code, local codes and regulations.

Shock Hazard

A faulty motor or wiring can cause electrical shock that could be fatal, whether touched directly or conducted through standing water. For this reason, proper grounding of the pump to the power supply's grounding terminal is required for safe installation and operation.

In all installations, the above-ground metal plumbing should be connected to the power supply ground as described in Article 250-80 of the National Electrical Code.

Pre-Installation Checklist

1. Confirm You Have the Right Pump

Read the pump nameplate to make sure it is the one you ordered.

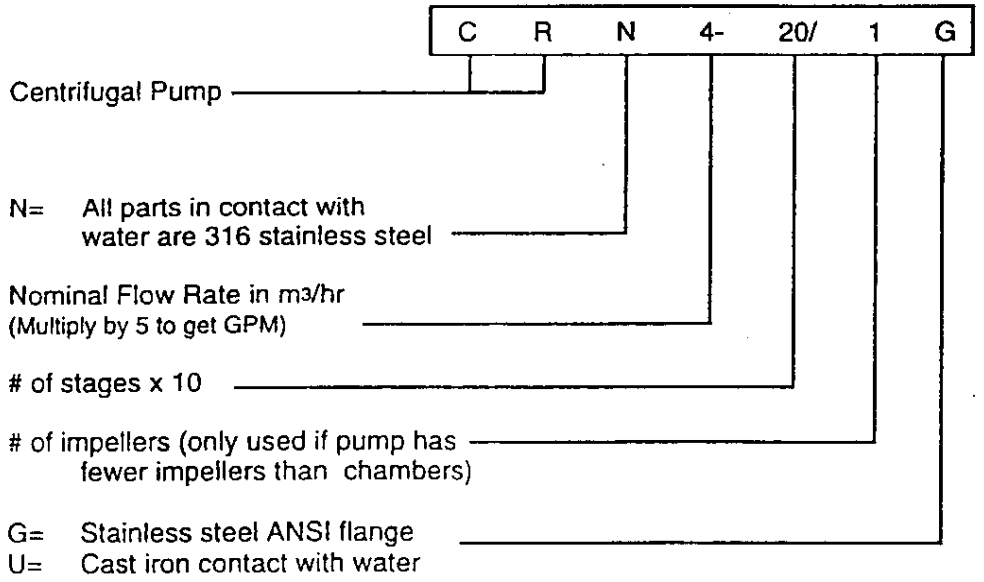

2. Check the Condition of the Pump

The shipping carton your pump came in is specially designed around your pump during production to prevent damage. As a precaution, it should remain in the carton until you are ready to install it. At that point, look at the pump and examine it for any damage that may have occurred during shipping. Examine any other parts of the shipment as well for any visible damage.

The position of the coupling (that connects the pump shaft to the motor shaft) is set at factory specifications. No adjustment is required.

3. Verify Electrical Requirements

Verification of the electrical supply should be made to be certain the voltage, phase and frequency match that of the pump motor. The proper operating voltage and other electrical information can be found on the motor nameplate. These motors are designed to run on ±10% of the nameplate-rated voltage. For dual-voltage motors, the motor should be internally connected to operate on the voltage closest to the 10% rating, i.e., a 208 voltage motor wired per the 208 volt connection diagram. Wiring connection diagrams can be found on the plates attached to the motor. **If voltage variations are larger than ±10%, do not operate the pump.**

4. Is the Application Correct for This Pump ?

Compare the pump's nameplate data or its performance curve with the application in which you plan to install it. Will it perform the way you want it to perform? Also, make sure the application falls within the following limits:

Type	Designed to pump...
CR	Hot and chilled water, boiler feed, condensate return, glycols and solar thermal fluids.
CRN	Deionized, demineralized and distilled water. Brackish water and other liquids unsuitable for contact with iron or copper alloys. (Consult manufacturer for specific liquid compatibilities.)

Maximum Operation Conditions

Maxium Fluid Temperature (all models): 5° to 250°F (-15° to 121°C)

All motors are designed for continuous duty in 104°F (40°C) ambient. For higher ambient temperature conditions consult Grundfos.

Maximum Working Pressures

(The following pressures are given for fluids at 250°F. Consult Grundfos for other working condtions.)

Pump Type	Models	Max PSI/(Bars)
CR2/CRN2	20 to 100	230/(16)
	120 to 180	300/(20)
CR4/CRN4	20/1 to 100	230/(16)
	120 to 160/14	300/(20)
CR8/CRN8	20/1 to 80	230/(16)
	100 to 160	330/(23)
CR16/CRN16	30/2 to 80	230/(16)
	100 to 120	330/(23)
CR30/CRN30	10 to 50	230/(16)
	80/6 to 110/10	365/(25)
CR60/CRN60	20 to 50	230/(16)
	60 to 80	330/(23)

Installation Procedures

Select Pump Location

The pump should be located in a dry, well-ventilated area which is not subject to freezing or extreme variation in temperature. Care must be taken to ensure the pump is mounted at least 6 inches (150 mm) clear of any obstruction or hot surfaces. The motor requires an adequate air supply to prevent overheating and should not be totally enclosed. For open systems requiring suction lift the pump should be located as close to the water source as possible to reduce piping losses.

Foundation

Concrete or similar foundation material should be used to provide a secure, stable mounting base for the pump. Bolt hole center line dimensions for the various pump types are given in Figure 1. Secure the pump to the foundation using all four bolts and shim pump base to assure the pump is vertical and all four pads on the base are properly supported.

Figure 1
Bolt Hole Centers

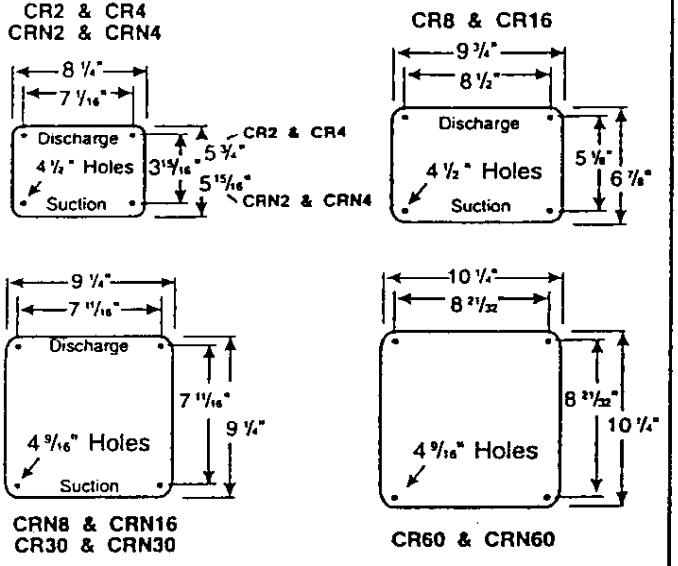

Pipework

Suction Pipe

The suction pipe should be adequately sized and run as straight and short as possible to keep friction losses to a minimum. Avoid using unnecessary fittings, valves or accessory items. Butterfly or gate valves should only be used in the suction line when it is necessary to isolate a pump because of a flooded suction condition. This would occur if the water source is above the pump. See Figures 2 and 3.

Flooded Suction

Fig. 2

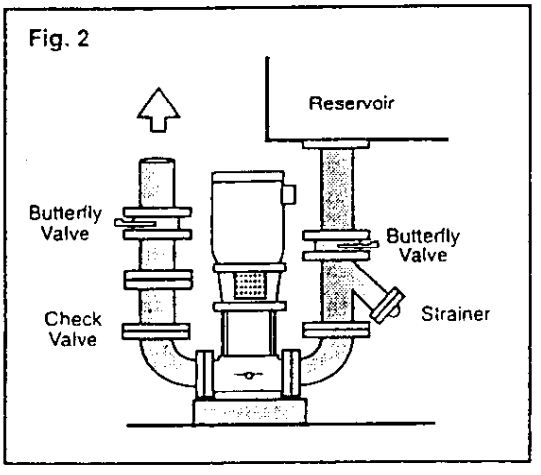

Suction Lift

Fig. 3

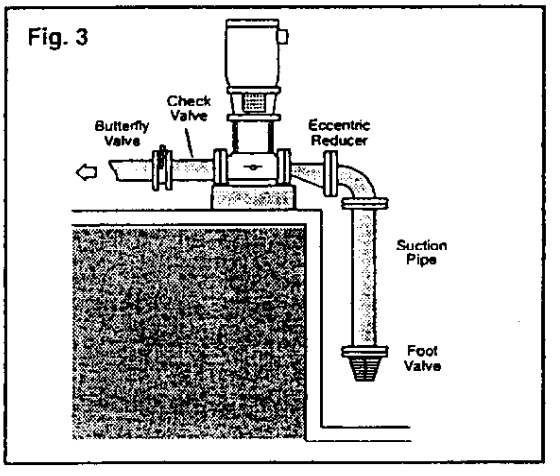

Minimum Suction Pipe Sizes

The following recommended suction pipe sizes are the smallest sizes which should be used with any specific Series C pump type. The suction pipe size should be verified with each installation to ensure good pipe practices are being observed and excess *friction losses are not encountered.*

CR2	1"	Nominal diameter sch 40 pipe
CR4	1 1/4"	Nominal diameter sch 40 pipe
CR8 & CR16	2"	Nominal diameter sch 40 pipe
CR30	3"	Diameter sch 40 pipe is preferable but 2 1/2" pipe may be used if the pumping rate is less than 88 GPM (20 M3/hr.)
CR60	4"	Nominal diameter sch 40 pipe

Discharge Piping

It is suggested that a check valve and isolation valve be installed in the discharge pipe. Pipe, valves and fittings should be at least the same diameter as the discharge pipe or sized in accordance with good piping practices to reduce excessive fluid velocities *and pipe friction losses.* **Pipe, valves and fittings must have a pressure rating equal to or greater than the maximum system pressure.** Before the pump is installed it is recommended that the discharge piping be pressure checked to at least the maximum pressure the pump is capable of generating or as required by codes or local regulations.

Whenever possible, avoid high pressure loss fittings, such as elbows or branch tees directly on either side of the pump. The piping should be adequately supported to reduce thermal and mechanical stresses on the pump. Good installation practice recommends the system be thoroughly cleaned and flushed of all foreign materials and *sediment prior to pump installation. Furthermore, the pump should never be installed* at the lowest point of the system due to the natural accumulation of dirt and sediment. If there is excessive sediment or suspended particles present, it is advised a strainer or filter be used.

PLEASE NOTE:
THE CR PUMPS ARE SHIPPED WITH PLUGGED SUCTION AND DISCHARGE. THE PLUGS MUST BE REMOVED BEFORE THE FINAL PIPE FLANGE TO PUMP CONNECTIONS ARE MADE.

Bypass

A bypass or pressure relief valve should be installed in the discharge pipe if there is any possibility the pump may operate against a closed valve in the discharge line. Flow through the pump is required to ensure adequate cooling and lubrication of the pump is maintained. See Table A on the next page for minimum flow rates.

Acceptable By-Pass Piping Arrangements

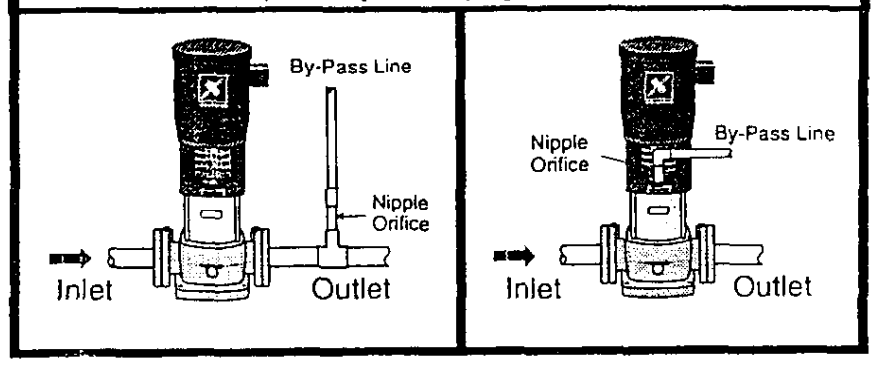

Installation Procedures

TABLE A. MINIMUM PUMPING RATES:

Pump Type	Min. Flow Rates
CR2/CRN2/CRN2G	1.2 GPM (0.25 M^3/HR)
CR4/CRN4/CRN4G	3.0 GPM (0.68 M^3/HR)
CR8/CRN8/CRN8G	5.3 GPM (1.20 M^3/HR)
CR16/CRN16/CRN16G	8.5 GPM (1.93 M^3/HR)
CR30/CRN30	13.5 GPM (3.07 M^3/HR)
CR60/CRN60	27.0 GPM (6.14 M^3/HR)

Electrical

WARNING

THE SAFE OPERATION OF THIS PUMP REQUIRES THAT IT BE GROUNDED IN ACCORDANCE WITH THE NATIONAL ELECTRICAL CODE AND LOCAL GOVERNING CODES OR REGULATIONS. CONNECT THE GROUND WIRE TO THE GROUNDING SCREW IN THE TERMINAL BOX AND THEN TO THE **ACCEPTABLE** GROUNDING POINT.

All electrical work should be performed by a qualified electrician in accordance with the latest edition of the National Electrical Code, local codes and regulations.

Motor

Grundfos Series C Pumps are supplied with heavy-duty 3450 RPM, O.D.P., NEMA C frame motors selected to our rigid specifications. T.E.F.C. motors are also available. Motors for other voltages and frequencies are available on a special-order basis. If you are replacing the pumping unit, but using a motor previously used on another Series C pump, be sure to read the "Motor Replacement" section on page 10 for proper adjustment of the coupling height.

Motor Terminal Box Positions (Top View)

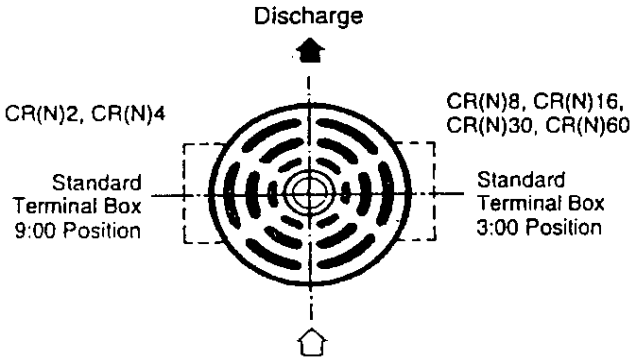

Fig. 4

Position of Terminal Box

The motor terminal box can be turned to any of four positions in 90° steps. To rotate the terminal box, remove the four bolts securing the motor to the pump; turn the motor to the desired location; replace and securely tighten the four bolts. See Figure 4.

Field Wiring

Wire sizes should be based on the current carrying properties of a conductor as required by the latest edition of the National Electrical Code or local regulations. Direct on line (D.O.L.) starting is approved due to the extremely fast run-up time of the motor and the low moment of inertia of pump and motor. If D.O.L. starting is not acceptable and reduced starting current is required, an auto transformer or resistant starter should

be used. It is suggested that a fused disconnect be used for each pump where service and standby pumps are installed.

Motor Protection

1. **Single-Phase Motors:**
   With the exception of 7 1/2 and 10 HP motors which require external protection, single-phase Series C pumps are equipped with multi-voltage, squirrel-cage *induction motors with built-in thermal protection.*

2. **Three-Phase Motors:**
   Series C Pumps with three-phase motors must be used with the proper size and type of motor-starter to ensure the motor is protected against damage from low voltage, phase failure, current imbalance and overloads. A properly sized starter with manual reset and ambient-compensated extra quick trip in all three legs should be used. The overload should be sized and adjusted to the full-load current rating of the motor. **Under no circumstances should the overloads be set to a higher value than the full load current shown on the motor nameplate. This will void the warranty.**

   Overloads for auto transformers and resistant starters should be sized in accordance with the recommendations of the manufacturer.

Operation and Maintenance

Starting the Pump the First Time

Priming

To prime the pump in a closed system or an open system where the water source is above the *pump, close the pump isolation valve(s) and* remove the priming plug from the pump head. See Figure 5A and 5B. Gradually open the isolation valve in the suction line until a steady stream of airless water runs out the priming port. Replace the plug and securely tighten. Completely open the isolation valves.

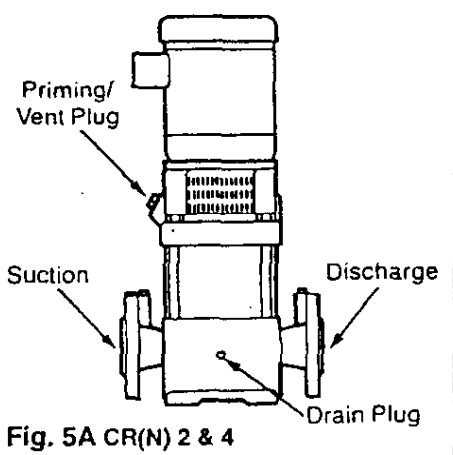

Fig. 5A CR(N) 2 & 4

In open systems where the water level is below the pump inlet, the suction pipe and pump must be filled and vented of air before starting the pump. Close the discharge isolation valve and remove the priming plug. Pour water through the priming hole until the suction pipe and pump are completely filled with water. If the suction pipe does not slope downward from the pump toward the water level, the air must be purged while being filled. Replace the priming plug and securely tighten.

Operation and Maintenance

Check the Direction of Rotation

1. Switch power off.
2. Check to make sure the pump has been filled and vented.
3. Remove the coupling guard and rotate the pump shaft to be certain it turns freely. Replace the coupling guard.
4. Verify that the electrical connections are in accordance with the wiring diagram on the motor.
5. Switch the power on and observe the direction of rotation. When viewed from the top, the pump should rotate counter-clockwise.

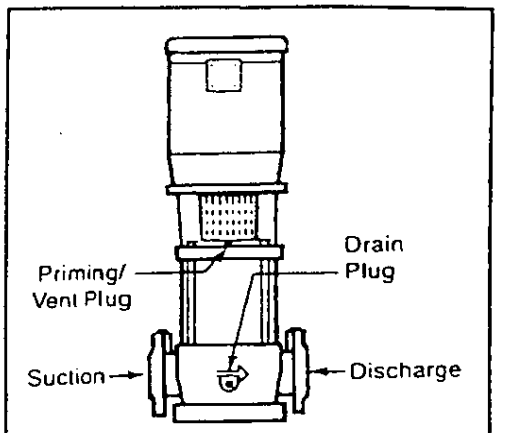

Fig. 5B CR(N)8, 16, 30 & 60

6. To reverse the direction of rotation, first switch OFF the supply power.
7. On three-phase motors, interchange any two power leads at the load side of the starter. On single-phase motors, see connection diagram on nameplate. Change wiring as required.
8. Switch on the power and again check for proper motor rotation.

REMINDER

Do not start the pump before priming or venting the pump. Never operate the pump dry.

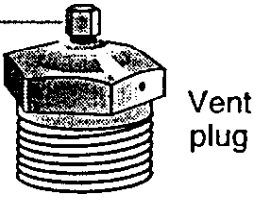

Starting and Adjusting

Before starting the pump, please check:

1. Pump is primed.
2. Direction of rotation is counter-clockwise when viewed from the top.
3. All piping connections are tight and the pipes are adequately supported.
4. Suction line isolation valve is completely opened, if a valve has been installed.
5. For initial starting, the isolation valve in the discharge pipe should be closed and gradually opened after the pump is turned on. Opening this valve too fast may result in some water hammering in the discharge pipe. Unless used as a flow throttling device, make sure this valve is completely open.
6. Check and record the voltage and amperage of the motor. Adjust the motor overloads if required.
7. Check and record operating pressures if pressure gauge have been installed.
8. Check all controls for proper operation. If pump is controlled by a pressure switch, check and adjust the cut-in and cut-out pressures. If low-water-level controls are used, be sure the low level switch is properly adjusted so the pump cannot run if the pump should break suction.

Operating Parameters

Grundfos Series C multi-stage centrifugal pumps installed in accordance with these instructions and sized for correct performance will operate efficiently and provide years of service. The pumps are water-lubricated and do not require any external lubrication or inspection. The motors will require periodic lubrication as noted in the following Maintenance Section.

Under no circumstances should the pump be operated for any prolonged periods of time without flow through the pump. This can result in motor and pump damage due to overheating. A properly sized relief valve should be installed to allow sufficient water to circulate through the pump to provide adequate cooling and lubricaton of the pump bearings and seals.

Pump cycling — Pump cycling should be checked to ensure the pump is not starting more than:

20 times per hour on 1/2 to 5 HP models,
15 times per hour on 7 1/2 to 15 HP models
10 times per hour on 20 to 30 HP models.

Rapid cycling is a major cause of premature motor failure due to increased heat build-up in the motor. *If necessary, adjust controls to reduce the frequency of starts and* stops.

Boiler-feed installations — If the pump is being used as a boiler-feed pump, make sure the pump is capable of supplying sufficient water throughout its entire evaporation and pressure ranges. Where modulating control valves are used, a bypass around the pump must be installed to ensure pump lubrication.

Maintenance

Freeze Protection:

If the pump is installed in an area where freezing could occur, the pump and system should be drained during freezing temperatures to avoid damage. To drain the pump, close the isolation valves, remove the priming plug and drain plug at the base of the pump. Do not replace the plugs until the pump is to be used again.

Motor Lubrication

Electric motors are pre-lubricated at the factory and do not require additional lubrication at start-up. *Motors containing sealed bearings do not require additional* lubrication during the first 15,000 hours of operation. Motors with grease fittings should **only** be lubricated with a lithium based grease.

Type of Service	Frequency of Greasing
Seasonal (motor is idle for more than 6 months)	Yearly
Intermittently	Semi-annually
Continuous	Quarterly

Approved Types of Grease
Shell Dolium R FSSO Beacon 3 BP-XRB2 Shell Alvania 3 Mobil Grease 2 Texaco Regal Starfos Premium

Do not over grease the bearings. Over greasing will cause increased bearing heat and can result in bearing/motor failure.

Operation and Maintenance

Regular Checkups

At regular intervals depending on the conditions and time of operation, the following checks should be made:

1. Pump meets required performance and is operating smoothly and quietly.
2. There are no leaks, particularly at the shaft seal.
3. The motor is not overheating.
4. Remove and clean all strainers or filters in the system.
5. Verify the tripping of the motor overload protection.
6. Check the operation of all controls. Check unit control cycling twice and adjust if necessary.
7. If the pump is not operated for unusually long periods, the unit should be maintained in accordance with these instructions. In addition, if the pump is not drained, the pump shaft should be manually rotated or run for short periods of time at monthly intervals.

If the pump fails to operate or there is a loss of performance, refer to the Trouble Shooting section on pages 12-15.

Motor Replacement

If the motor is damaged due to bearing failure, burning or electrical failure, the following instructions detail how to remove the motor for replacement. It must be emphasized that motors used on Series C pumps are specifically selected to our rigid specifications. Replacement motors must be of the same NEMA C frame size, should be equipped with the same or better bearings and have the same service factor. Failure to follow these recommendations may result in premature motor failure.

Disassembly

1. Remove the coupling guard screens.
2. Using the proper metric Allen wrench, loosen the four cap screws in the coupling.
3. With the correct size wrench, loosen and remove the four bolts which hold the motor to the discharge section of the pump end.
4. Lift the motor straight up until the shaft is free from the coupling.

Assembly

1. Thoroughly clean the surfaces of the motor and pump end mounting flanges. Set the motor on the pump end.
2. Place the terminal box in the desired position by rotating the motor.
3. Insert the mounting bolts, then diagonally and evenly tighten.

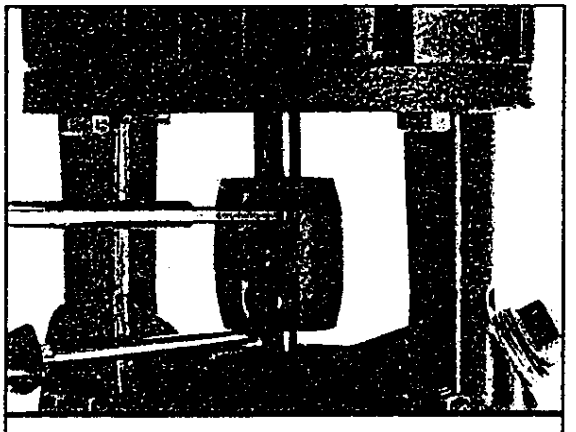

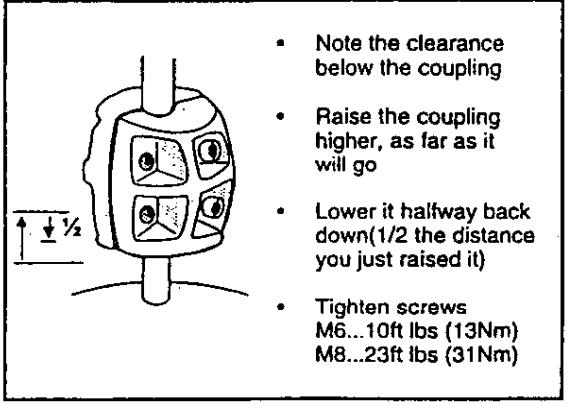

4. Using a larger screwdriver, raise the pump shaft by placing the tip of the screwdriver under the coupling and carefully elevating the coupling to its highest point. Note: The shaft can only be raised approximately 0.20 inches (5mm).
5. Now lower the shaft halfway back down the distance you just raised it (approximately the thickness of a dime), and retighten the metric cap screws in the coupling. Be sure to tighten the top and bottom screws on one side of the coupling and then the other. Torque coupling screws to the following specifications.

Coupling Bolt Size	Min. Torque Specifications
M6	10 ft-lbs.
M8	23 ft-lbs.
M10	46 ft-lbs.

6. Check to see that the gaps between the coupling halves are equal. Loosen and re-adjust if necessary.
7. Be certain the pump shaft can be rotated by hand. If the shaft cannot be rotated or it binds, disassemble and check for misalignment.
8. Replace the two coupling guard screens.

Parts Lists, Kits, and Accessories

Parts List

For each Series C pump model we offer an extensive **Parts List** and diagram of parts used in that pump and those we recommend you keep on hand for future maintenance. In addition, the listings also provide information about our prepackaged **Service Kits** of those pump components most likely to exhibit wear over time, as well as the complete **Impeller Stack** needed to replace the "guts" of each model. These Parts Lists are available separately from our literature warehouse or as a set with extensive service instructions in our **Series C Service Manuals** (for $25).

Spare Parts

For each model Grundfos sells, we offer an extensive list of spare parts for sale. For a current list of these parts, refer to our: *Plumbing & Heating/Industrial Service Kits, Tools, and Spare Parts Price List. Form # LSK-SL-002*

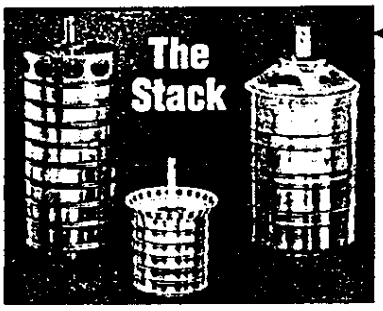

Prepackaged impeller stacks ready for immediate installation

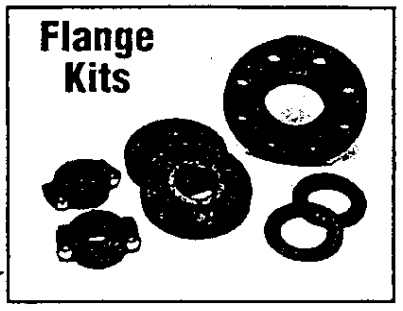

Prepackaged Flange Kits

Troubleshooting

WARNING
WHEN WORKING WITH ELECTRICAL CIRCUITS, USE CAUTION TO AVOID ELECTRICAL SHOCK. IT IS RECOMMENDED THAT RUBBER GLOVES AND BOOTS BE WORN, AND METAL TERMINAL BOXES AND MOTORS ARE GROUNDED BEFORE ANY WORK IS DONE.
FOR YOUR PROTECTION, ALWAYS DISCONNECT THE PUMP FROM ITS POWER SOURCE BEFORE HANDLING.

Preliminary Tests

Supply Voltage

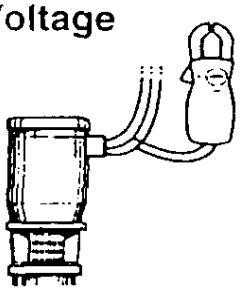

How to Measure

Use a volt meter, (set to the proper scale) measure the voltage at the pump terminal box or starter.

On single-phase units, measure between power leads L1 and L2 (or L1 and N for 115 volt units). On three-phase units, measure between:

- Power leads L1 and L2
- Power leads L2 and L3
- Power leads L3 and L1

What it Means

When the motor is under load, the voltage should be within ±10% of the nameplate voltage. Larger voltage variation may cause winding damage.

Large variations in the voltage *indicate a poor electrical supply and* the pump should not be operated until these variations have been corrected.

If the voltage constantly remains high or low, the motor should be changed to the correct supply voltage.

Current Measurement

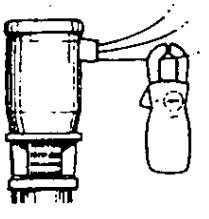

How to Measure

Use an ammeter, (set on the proper scale) to measure the current on each power lead at the terminal box or starter. See the motor nameplate for amp draw information.

Current should be measured when the pump is operating at constant discharge pressure.

What it Means

If the amp draw exceeds the listed service factor amps (SFA) or if the current imbalance is greater than 5% between each leg on three-phase units, check the following:

1. Burned contacts on motor starter.
2. Loose terminals in starter or terminal box or possible wire defect.
3. Too high or too low supply voltage.
4. Motor windings are shorted or grounded. Check winding and insulation resistances.
5. *Pump is damaged causing a* motor overload.

Insulation Resistance

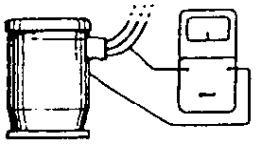

How to Measure

Turn off power and disconnect the supply power leads in the *pump terminal box. Using an* ohm or mega ohm meter, set the scale selector to Rx 100K and zero adjust the meter.

Measure and record the resistance between each of the terminals and ground.

What it Means

Motors of all HP, voltage, phase and cycle duties have the same value of *insulation resistance. Resistance* values for new motors must exceed 1,000,000 ohms. If they do not, motor should be repaired or replaced.

Diagnosing Specific Problems

Problem	*Possible Cause*	*Remedy*
The pump does not run	1. No power at motor.	Check for voltage at motor teminal box. If no voltage at motor, check feeder panel for tripped circuits and reset circuit.
	2. Fuses are blown or circuit breakers are tripped.	Turn off power and remove fuses. Check for continuity with ohmmeter. Replace blown fuses or reset circuit breaker. If new fuses blow or circuit breaker trips, the electrical installation, motor and wires must be checked.
	3. Motor starter overloads are burned or have tripped out.	Check for voltage on line and load side of starter. Replace burned heaters or reset. Inspect starter for other damage. If heater trips again, check the supply voltage and starter holding coil.
	4. Starter doesnot energize.	Energize control circuit and check for voltage at the holding coil. If no voltage, check control circuit fuses. If voltage, check holding coil for shorts. Replace bad coil.
	5. Defective controls.	Check all safety and pressure switches for operation. Inspect contacts in control devices. Replace worn or defective parts or controls.
	6. Motor is defective.	Turn off power and disconnect wiring. Measure the lead to lead resistances with ohmmeter (RX-1). Measure lead to ground values with ohmmeter (RX-100K). Record measured values. If an open or grounded winding is found, remove motor and repair or replace.
	7. Defective capacitor. (Single-phase motors)	Turn off power and discharge capacitor. Check with ohmmeter (RX-100K). When the meter is connected to the capacitor, the needle should jump towards 0 ohms and slowly drift back to infinity (∞). Replace if defective.
	8. Pump is bound.	Turn off power and manually rotate pump shaft. If shaft does not rotate easily, check coupling setting and adjust as necessary. If shaft rotation is still tight, remove pump and inspect. Disassemble and repair.
The pump runs but at reduced capacity or does not deliver water	1. Wrong rotation	Check wiring for proper connections. Correct wiring.
	2. Pump is not primed or is airbound.	Turn pump off, close isolation valve(s), remove priming plug. Check fluid level. Refill the pump, replace plug and start the pump. Long suction lines must be filled before starting the pump.
	3. Strainers, check or foot valves are clogged.	Remove strainer, screen or valve and inspect. Clean and replace. Reprime pump.

Troubleshooting

Problem	*Possible Cause*	*Remedy*
The pump runs but at reduced capacity or does not deliver water	4. Suction lift too large.	Install compound pressure gauge at the suction side of the pump. Start pump and compare reading to performance data. Reduce suction lift by lowering pump, increase suction line size or removing high friction loss devices.
	5. Suction and/or discharge piping leaks.	Pump runs backwards when turned off. Air in suction pipe. Suction pipe, valves and fittings must be airtight. Repair any leaks and retighten all loose fittings.
	6. Pump worn.	Install pressure gauge, start pump, gradually close the discharge valve and read pressure at shutoff. Convert measured pressure (in PSI) to head (in feet): (Measured PSI x 2.31 ft./PSI = _____ ft.). Refer to the specific pump curve for shutoff head for that pump model. If head is close to curve, pump is probably OK. If not, remove pump and inspect.
	7. Pump impeller or guide vane is clogged.	Disassemble and inspect pump passageways. Remove any foreign materials found.
Pump cycles too much	1. Pressure switch is not properly adjusted or is defective.	Check pressure setting on switch and operation. Check voltage across closed contacts. Readjust switch or replace if defective.
	2. Level control is not properly set or is defective.	Check setting and operation. Readjust setting (refer to level control manufacturer's data). Replace if defective.
	3. Insufficient air charging or leaking tank or piping.	Pump air into tank or diaphragm chamber. Check diaphragm for leak. Check tank and piping for leaks with soap and water solution. Check air to water volume. Repair as necessary.
	4. Tank is too small.	Check tank size and air volume in tank. Tank volume should be approximately 10 gallons for each gpm of pump capacity. The normal air volume is 2/3 of the total tank volume at the pump cut-in pressure. Replace tank with one of correct size.
	5. Pump is oversized.	Install pressure gauges on or near pump suction and discharge ports. Start and run pump under normal conditions, record gauge readings. Convert PSI to feet (Measured PSI x 2.31 ft./PSI = _____ ft.) Refer to the specific pump curve for that model, ensure that total head is sufficient to limit pump delivery within its design flow range. Throttle pump discharge flow if necessary.

Problem	*Possible Cause*	*Remedy*
Fuses blow or circuit breakers or overload relays trip	1. Low voltage.	Check voltage at starter panel and motor. If voltage varies more than ±10%, contact power company. Check wire sizing.
	2. Motor overloads are set too low.	Cycle pump and measure amperage. Increase heater size or adjust trip setting to a maximum of motor nameplate (full load) current.
	3. Three-phase current is imbalanced.	Check current draw on each lead to the motor. Must be within ±5%. If not, check motor and wiring. Rotating all leads may eliminate this problem.
	4. Motor is shorted or grounded.	Turn off power and disconnect wiring. Measure the lead-to-lead resistance with an ohmmeter (RX-1). Measure lead-to-ground values with an ohmmeter (RX-100K) or a megaohm meter. Record values. If an open or grounded winding is found, remove the motor, repair and/or replace.
	5. Wiring or connections are faulty.	Check proper wiring and loose terminals. Tighten loose terminals. Replace damaged wire.
	6. Pump is bound.	Turn off power and manually rotate pump shaft. If shaft does not rotate easily, check coupling setting and adjust as necessary. If shaft rotation is still tight, remove pump and inspect. Disassemble and repair.
	7. Defective capacitor (single-phase motors).	Turn off power and discharge capacitor. Check with ohmmeter (RX-100K). When the meter is connected to the capacitor, the needle should jump towards 0 ohms and slowly drift back to infinity (∞). Replace if defective.
	8. Motor overloads at higher ambient temperature than motor.	Use a thermometer to check the ambient temperature near the overloads and motor. Record these values. If ambient temperature at motor is lower than at overloads, especially where temperature at overloads is above 104°F (40°C), ambient-compensated heaters should replace standard heaters.

CONTROL PANEL

TABLE OF CONTENTS

1.0 INTRODUCTION
- 1.1 BRIEF OVERVIEW OF OPERATION
- 1.2 CONFIGURATIONS

2.0 MOUNTING:

3.0 ELECTRICAL CONNECTIONS
- 3.1 GENERAL
- 3.2 INPUT POWER
- 3.3 OUTPUT POWER
- 3.4 MULTILEVEL PROBE CONNECTION
- 3.5 RECHARGE GALLERY HI LO OPERATION (OPTIONAL)

4.0 TROUBLESHOOTING
- 4.1 FAILSAFE OPERATION

5.0 STARTUP PROCEDURE
- 5.1 PROBELESS CONTROLLER MODULE CHECKOUT
- 5.2 FUSE CHECKOUT

6.0 PARTS LIST

FIGURES / DRAWINGS

COMPONENT LOCATION CHART DRAWING NO. _____
GALLERY HI / LO PROBE (OPTIONAL) DRAWING NO. ES-4-020-130

1.0 INTRODUCTION:

1.1 BRIEF OVERVIEW OF OPERATION: Nepcco's Multiwell Probeless™ pump controller Systems can remove the contaminated water by creating a flow toward the recovery wells. The result can be less total dissolved substances entering the aquifer, reduced water treatment costs, and less total time required to bring the project to closure. Savings of 40 to 50 percent in equipment costs over using dedicated pumping systems are typical when using two or more recovery wells at an underground spill site.

1.2 The operation of each recovery well pump is monitored by a power sensing circuit in the Probeless™ Control Module. When the controller detects a load change, for example the pump running out of water, this change is detected and the controller removes power from the pump for a pre-set time. After the pre-set time out period the power is applied to the pump motor and the process repeats. In the event of an overload condition the controller will interrupt the power to the pump and the pump will remain off until the problem has been corrected and the reset button is manually pressed.

1.3 Nepcco's MultiPurge™ Controllers are capable of simultaneously controlling multiple HydroPurge™ pump sets. The 22PL Model also includes a 3 event Failsafe feature that will shut down the Controller in the event of a system failure. Failures such as Sump Level HI-HI (LATCHING), Blower Pressure LO-LO (NON-LATCHING), Gallery HI-LO (LATCHING) etc. These Failsafe conditions are transmitted from Sensor switches to the failsafe circuitry in the control panel. The Controller detects this contact closure and illuminates the corresponding Failsafe indicator lamp and disables the recovery well pumps until Manually Reset. In the event of power loss the system will shut down until power is restored. When power is restored to the system the blower will automatically start up and remove the blower failsafe (NON-LATCHING), and if no other failsafe conditions exist, the system will resume normal operation.

An optional failsafe HI LO is offered for the recharge gallery that will shut down the system if the recharge gallery overflows. It will then reset the system when the water level falls back to normal.

2.0 MOUNTING:

2.1 MOUNTING the MultiPurge™ Controller has been designed for outdoor installation; however, we recommend that some protection from extreme weather conditions be incorporated when possible. Mounting on a wall or other suitable surface is preferred. Although not required, a vertical surface is recommended. The MultiPurge™ Controller enclosure **is not explosion-proof** and care should be exercised to keep its mounting location in a **non-hazardous** location.

3.0 ELECTRICAL CONNECTIONS: (REFER TO FIG. 1 & 2)

3.1 GENERAL: Power to and from the MultiPurge™ Controller enclosure is via rain-tight conduit in compliance with the National Electrical Code and local wiring requirements. Access holes for the conduit have not been provided since their location will vary depending on the site layout. In general, power wiring from the main feed should enter the MultiPurge™ Controller enclosure at or near the top, and wires to the pump motors and probes should exit the enclosure at the bottom.

3.2 INPUT POWER: 240 volt, 60Hz, 1-phase power for the MultiPurge™ Controller is connected via TB1 at the top of the sub-panel. Provision is made for wire size up to #4 AWG. Input power wires must copper type fused and sized for the combined motor loads with a temperature rating of 60º C. The maximum current for the HydroPurge™ motor is 30 amperes, some motors may require motor starters. For Standard HydroPurge™ small motor loads, **30 amp service is recommended** for the MultiPurge™ 22PL Controller .

3.3 OUTPUT POWER: 240 volt,60Hz, 1-phase voltage for HydroPurge™ pumps is available on **TB2**. Output power must be supplied with copper type power conductors. Power available is normally limited to 15 amps on HydroPurge™ circuits. L1 & L2 represent the 240AC volt power leads with an adjacent ground connection for each motor. Power to transfer pumps is controlled by the low voltage Logic curcuits and the Multilevel probes. The Probeless™ control module controls power for HydroPurge™ pump #1 and #2.

3.4 PROBE INPUTS: The Multilevel probe inputs are located on the bottom of the control panel.

3.5 GALLERY HI/LO (OPTIONAL): The gallery HI LO terminal block is located in the lower right hand side of the control panel. The gallery hi lo probe connects as per the color coded diagram shown by drawing ES-4-020-130. Place the gallery

probe in the upper section of the recharge gallery right side up (probe wire up). If the recharge gallery floods, the probe will fail the control panel on the upper float. When the water level falls below the lower float the system will automatically restart. The distance between the HI float and the LO float is approximately 7". If a greater distance between HI and LO is necessary, two probes will be required.

4.0 TROUBLESHOOTING:

4.1 To VERIFY FAILSAFE operation; Apply power to the Control Panel and simulate a failed condition by manually lifting the probe HI-HI float, the corresponding Red lamp on the front panel should light, and the system should shutdown. This condition should remain until the failure is removed and the Reset button is pushed. Check each Failsafe channel with its corresponding Sensor. If sensors are not accessible then jumper between sensor and common for each failsafe input at TB-4 (Failsafe Inputs). NOTE: BLOWER FAILSAFE IS NON LATCHING

WITH OR WITHOUT LOW VOLTAGE PROTECTION

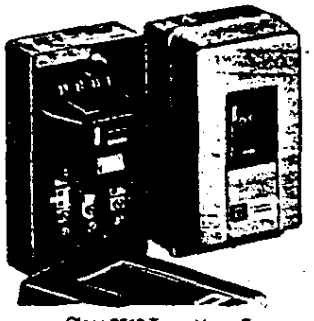

Class 2510 Types M and T in General Purpose Enclosure

Types M and T integral horsepower manual starters provide convenient "On-Off" operation of small single phase, polyphase, or dc motors. Typical applications include small machine tools, pumps, fans, and conveyors.

- Push Button or Toggle Operators
- Reliable overload protection
- Pilot light and auxiliary contact available.

Types M and T manual starters **with Low Voltage Protection (LVP)** combine the features of the standard Types M and T with the additional advantage of protection from automatic start-up after a power loss. Low voltage protection is accomplished by a continuous duty solenoid which is energized whenever line side voltage is present. In the event of a loss of power, the solenoid de-energizes, opening the starter contacts. To close contacts after power returns, the starter must be manually reset.

Manual starters with LVP meet OSHA, ANSI, NFPA, and local safety standards requiring low voltage protection for certain applications. Typical applications include metal and woodworking machinery, grinders, mixers, conveyors, and power presses.

When ordering manual starters with low voltage protection, coil voltage is the same as motor line voltage.

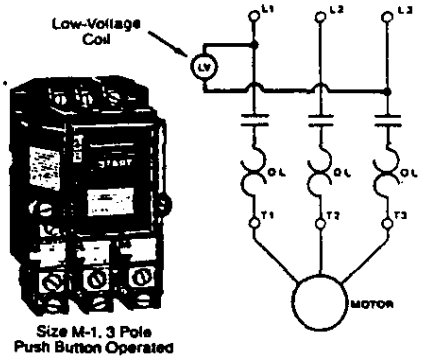

Size M-1, 3 Pole Push Button Operated

APPLICATION DATA

Size—Available in NEMA Sizes M-0, M-1, and M-1P.

Poles—Two poles single phase; three poles polyphase; 2 poles dc (without Low Voltage Protection only).

Voltage—600 volts ac maximum; 250 volts dc maximum (without Low Voltage Protection only).

Overload Relays—Melting alloy thermal overload relays have provisions for one Type B thermal unit for single phase starters and three Type B thermal units for three phase starters. **All thermal units must be installed and the device reset before the starter contacts will operate.** After overload relays have tripped, allow one or two minutes for the alloy to solidify before resetting.

Operator—Available with a pushbutton or toggle operator in open and NEMA 1 versions. NEMA Types 4 & 12 utilize a direct acting push button only. NEMA Types 4X & 7/9 utilize an external toggle to actuate a push button device inside.

Mechanism Lock Off—Both open devices and starters in NEMA Type 1 surface and flush mounting, NEMA Types 4, 4X, 7 & 9 and 12 enclosures can be locked in the OFF or STOP position. The NEMA Type 1 surface mounting, 4, 4X, 7 & 9 and 12 enclosures can also be locked closed to prevent unauthorized entry.

TERMINALS

NEMA Size	Power Terminals: Type of Lug	Power Terminals: Wire Size (Solid or stranded copper wire) Min.—Max.	Auxiliary Interlock Terminals: Type of Lug	Auxiliary Interlock Terminals: Wire Size (Solid or stranded copper wire) Min.—Max.
M-0	Pressure Wire	#14—#8	Pressure Wire	#16—#12
M-1	Pressure Wire	#14—#8	Pressure Wire	#16—#12
M-1P	Box Lug	#14—#6	Pressure Wire	#16—#12

MAINTENANCE OF EQUIPMENT

For proper performance, all equipment should be periodically inspected and maintained. Replacement contacts and interlocks are available in kit form to facilitate servicing and stocking. In addition, the service bulletin referenced contains an exploded view of the device with components clearly marked for easy identification by description and part number.

NOTE: THE LVP COIL ASSEMBLY IS FACTORY ASSEMBLED AND ADJUSTED. IT IS NOT FIELD REPLACEABLE. Consult your local Square D Field Office for additional information.

NEMA Size	Series	No. of Poles	Service Bulletin: Without Low Voltage Protection	Service Bulletin: With Low Voltage Protection	Replacement Contact Kit: Class	Replacement Contact Kit: Type
M-0	A	2 or 3	312AS	369AS	9998	ML1
	B	2 or 3	312AS	411AS	9998	ML1
M-1	A	2 or 3	312AS	369AS	9998	ML2
	B	2 or 3	312AS	411AS	9998	ML2
M-1P	A	2	312AS	369AS	9998	ML2
	B	2	312AS	411AS	9998	ML2

ACCESSORIES AND MODIFICATION KITS

One AUXILIARY CONTACT, either N.O. or N.C. can easily be added internally to any open or enclosed Type M or T manual starter. It occupies the space provided in either the upper right hand or left hand corners of the device. These contacts are for ac loads only. For electrical ratings refer to page 11-225, Class 9999 Types SX11 or SX12.

A unique red PILOT LIGHT assembly that clips into place is available **factory installed** on NEMA Types 1, 4, 4X, 12 and flush enclosures or as a **field modification kit** on the NEMA Type 1 surface or flush mounting enclosures. The color cap assembly snaps into a knockout in the enclosure cover on the NEMA Type 1 enclosures. Pilot light kits are available for use on various voltages (110-600 volts). Pilot light assemblies are not available for NEMA Type 7 & 9 enclosures.

A REMOTE EMERGENCY STOP function may be **factory added** to manual starters with Low Voltage Protection. The user then wires a N.C. pushbutton or other control device in series with the LVP coil. After operation of the emergency stop, the starter must be manually reset.

MISCELLANEOUS SYSTEM COMPONENTS

Master Meter Magnetic Multi-Jet Water Meters 5/8"- 1"

The Master Meter Magnetic Multi-Jet dry dial meter is the most efficient meter you can find. The new MM series offers the time proven Multi-Jet concept combined with the center- sweephand sealed register that is preferred by most water utilities.

The Multi-Jet design offers superior accuracy over a wide range of flows, with low head loss even at high flows. The magnetic-drive vacuum-sealed register protects the register assembly from rust, sand and other water impurities. The center sweephand register has large numerals for easy reading and testing.

MM FEATURES

BRONZE METER HOUSING•Available with or without frost protection • 81% Copper content exceeds AWWA • Wrench pads for ease in installment • *Complete in line serviceability* • Brass case and lid • Sealed adjusting port.

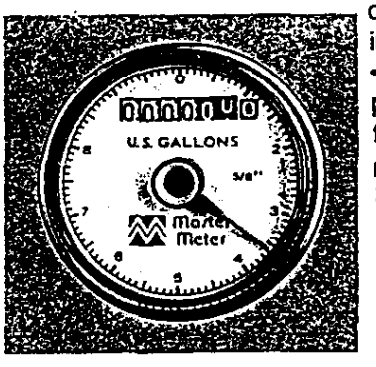

MOLDED CHAMBER • Port holes molded - not machined • Corrosion resistant • Large basket strainer • extremely accurate - all flows • Sapphire rotor bearing

SEALED REGISTER • Vacuum-sealed stainless steel register • Magnetic Drive • Center sweephand • Leak indicator • Large numeral wheels • Easy to read • Tempered glass lens • Easily adapted to metric • Damage resistant brass sealing ring

BENEFITS

• Most accurate of all meter designs • Eliminates discoloring of dial face • Easy and inexpensive to maintain • Low Head Loss • Can be serviced in line • Long life for all parts • Corrosion resistant • Eliminates fogging

MASTER METER© WATER METERS MEET OR EXCEED AWWA C-708

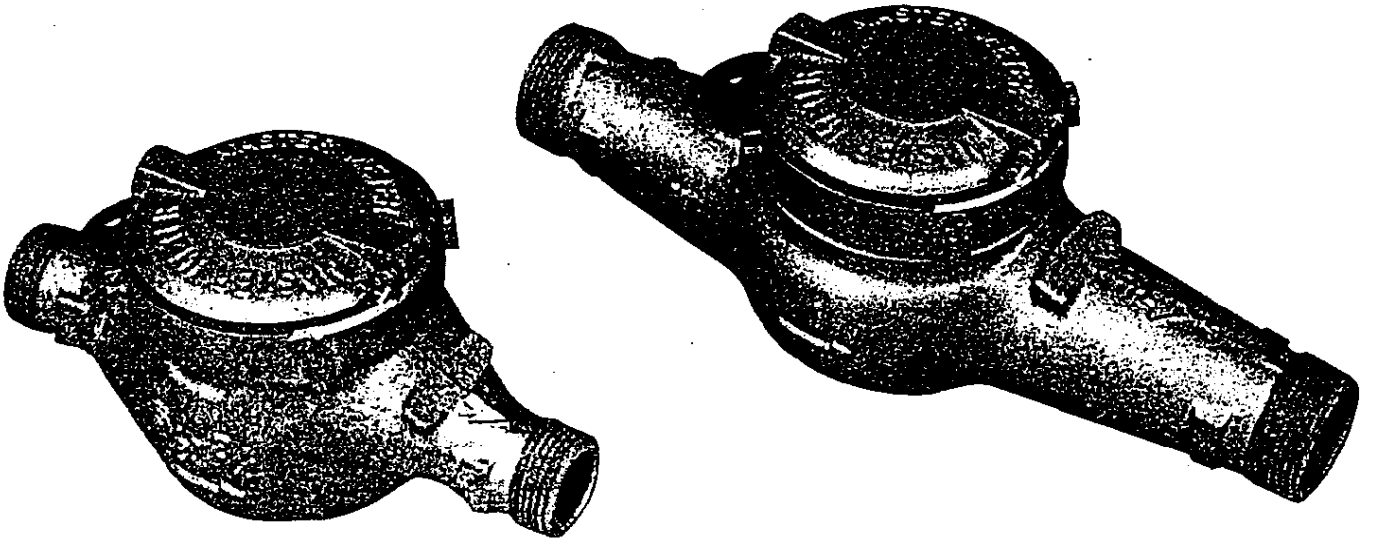

Master Meter Magnetic Multi-Jet Water Meters 1½"- 2"

Master Meter Magnetic Multi-Jet dry dial meters are the most efficient and accurate meters available. The new MM series offers the time proven Multi-Jet concept with the center-sweep hand sealed register preferred by most water utilities.

The Multi-Jet design offers superior accuracy over a wide range of flows, with low head loss even at high flows. The magnetic-drive vacuum-sealed register protects the register assembly from rust, sand and other water impurities. The register face has a large sweep hand and large numerals for easy reading and testing.

MM BENEFITS • *Most accurate of all* meter designs • Easy and inexpensive to maintain • Low head loss • In-line serviceability • Long life for all parts

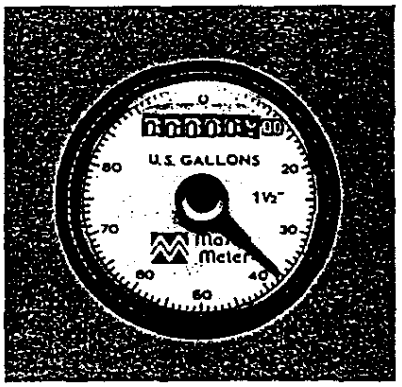

BRONZE METER HOUSING • 81 % Copper content exceeds AWWA • Brass case and lid • Sealed adjusting port

MOLDED CHAMBER • Molded port holes - not machined • Corrosion resistant • Extreme accuracy at all flows • Sapphire rotor bearing

SEALED REGISTER • Vacuum-sealed register in stainless steel housing with heat treated glass lens • Center sweephand • Leak indicator • *Easily adapts to metric* • Damage resistant brass sealing ring • Eliminates discoloring of dial face

MASTER METER© WATER METERS MEET OR EXCEED AWWA C-708

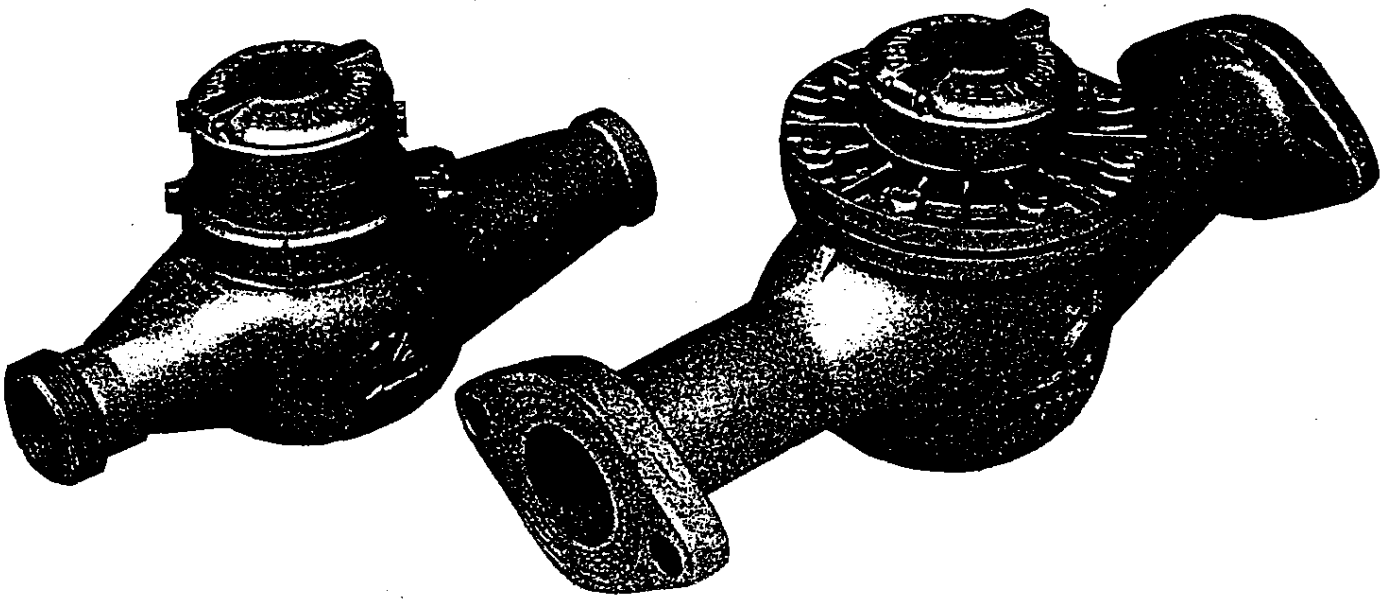

MASTER METER

NEW FEATURES ON MASTER METER 1½" AND 2"

DIMENSIONAL AND PERFORMANCE INFORMATION

Model No.	Length	Weight	Loss of Head at Design Capacity	Minimum Flow Rate G.P.M.	Normal Flow Range	Maximum Working Temp.
1 1/2" MM6T Threaded Ends	12 5/8	10 lbs.	12	1.5	5-100	120° F
1 1/2" MM6F Flanged Ends	13	12 lbs.	12	1.5	5-100	120° F
2" MM7T Threaded Ends	15 1/4	20 lbs.	13	2.0	8-160	120° F
2" MM7F Flanged Ends	17	23 lbs.	13	2.0	8-160	120° F

MASTER METER MULTI-JETS OFFER:

• Extreme accuracy at low flows • Higher continuous flow capacity • Sand and material in suspension have little effect on meter accuracy • Factory pretested cartridge allows for in-line service and lower maintenance costs • Flanged or threaded end.

PERFORMANCE

The Multi-Jet design equally distributes load pressure on the impeller, causing less wear while maintaining accuracy even under constant use. The magnetic drive coupling consists of two noncorroding ceramic rings, one in the register and one in the measuring chamber. This coupling ensures perfect sealing. There is no drive shaft through the register box. Therefore, the register remains permanently clean, dry and protected.

THE MASTER METER GUARANTEE

The Master Meter is guaranteed to perform to AWWA standards for new meter accuracy to be free from defects in materials or workmanship for a period of two (2) years from the date of shipment. Additionally, the meters will perform to at least AWWA standards for repaired meter accuracy for the time period or registration limits indicated:

⅝" – Fifteen (15) years or 1,500,000 gallons, whichever occurs first;
1" – Fifteen (15) years or 3,000,000 gallons, whichever occurs first;
1½" – Fifteen (15) years or 5,500,000 gallons, whichever occurs first;
2" – Fifteen (15) years or 8,000,000 gallons, whichever occurs first;

The meter body of all sizes is guaranteed against manufacturing defects for 25 years.

Master Meter's liability under this performance guarantee is expressly limited to repair of the meter upon the customer's returning the meter to the factory or service center designated by a Master Meter representative and paying freight cost to such factory or service center.

This performance guarantee shall not be applicable to meters which have been damaged by willful misconduct, negligence, vandalism, act of God, exposure to adverse service conditions or improper installation.

Head Loss Curves

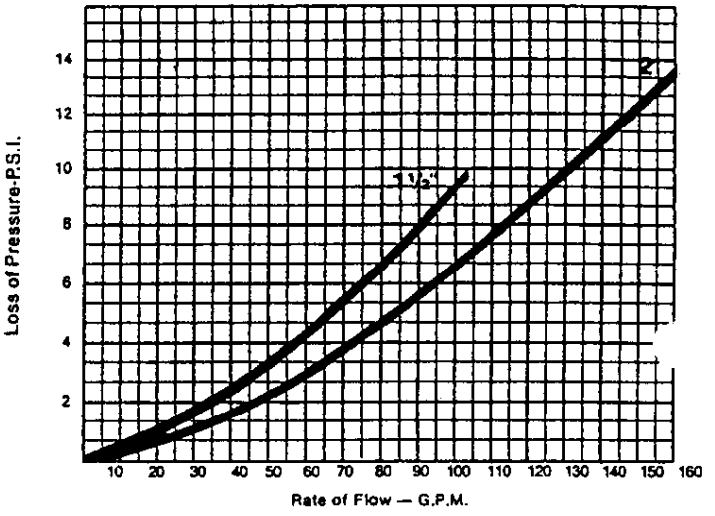

Distributed by:

MASTER METER, INC. • 1001 McKesson Drive • Longview, TX 75604 • 214-297-0635 • 1-800-527-8466

MANUAL FOR THE INSTALLATION, OPERATION AND MAINTENANCE

OF

FILTER VESSELS

FILTER SPECIALISTS, INC.
MICHIGAN CITY, INDIANA
(219) 879-3307

IMPORTANT!!

Read and Understand ENTIRE Manual Before Operating This Vessel

THIS MANUAL CONTAINS IMPORTANT REVISED INFORMATION AND SUPERSEDES ALL PRIOR PUBLICATIONS.

JA 90 | MR 90

NO 91

SAFETY

THIS MANUAL HAS BEEN PREPARED FOR THE SAFE INSTALLATION, OPERATION AND MAINTENANCE OF FSI PRESSURE VESSELS. WARNING LABELS HAVE BEEN RE-PRINTED IN THIS MANUAL. THE APPLICATION OF WARNING LABELS TO VESSELS IS BASED UPON VESSEL TYPE AND ADEQUATE SPACE TO AFFIX LABELS. **WARNING LABELS ARE NOT A SUBSTITUTE FOR READING AND UNDERSTANDING THIS MANUAL.**

LABEL FORMAT

A. HAZARD ALERT WORD

B. HAZARD AND CONSEQUENCE STATEMENT

C. INSTRUCTION STATEMENT

	⚠ WARNING
A. →	IMPROPER USE OF THIS VESSEL CAN CAUSE SERIOUS INJURY, BLINDNESS OR DEATH.
B. →	READ THE VESSEL ASME CODE PLATE, WARNING LABELS, AND THIS INSTRUCTION MANUAL FOR THE INSTALLATION, OPERATION AND MAINTENANCE OF FILTER VESSELS BEFORE INSTALLATION AND OPERATION.
C. →	

ALL LABELS MUST BE REPLACED WHEN LEGIBILITY IS LOST OR VISIBILITY IS BLOCKED. LABELS HAVE A PART NUMBER IN THE LOWER RIGHT HAND CORNER FOR RE-ORDERING.

PROTECTIVE CLOTHING

WARNING: BEFORE OPERATING THIS VESSEL, OPERATOR SHOULD WEAR PROTECTIVE CLOTHING INCLUDING PROTECTIVE GLOVES AND FACE SHIELD. IF HANDLING HOT LIQUIDS, OPERATOR SHOULD WEAR HEAT-RESISTANT CLOTHING SUCH AS NOMEX GARMENTS TO PREVENT POSSIBLE BURNING OR SCALDING. REFER TO MATERIAL SAFETY DATA SHEET (MSDS) FOR SPECIFIC INSTRUCTIONS FOR HANDLING THE LIQUID AS SUPPLIED BY THE MANUFACTURER OF THE MATERIAL.

INSTALLATION

I. MOVING VESSEL

A. MOUNT VESSEL SECURELY TO A SKID AND MOVE SKID WITH FORK LIFT.

B. VESSEL CAN BE LIFTED BY MEANS OF A MULTI-LEGGED SLING CHAIN WITH A SAFETY HOOK ATTACHED TO THE END OF EACH LEG. ATTACH THE HOOK OF EACH LEG TO AN EYENUT AND SPACE LEGS AROUND VESSEL EQUALLY. *(SEE FIGURE 1 - PAGE 2)*

WARNING

NEVER USE THE LID SUPPORT ARM TO LIFT VESSEL

DAMAGE TO LIFT ASSEMBLY WILL RESULT

VESSEL MAY DROP

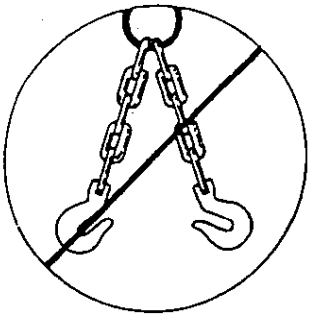

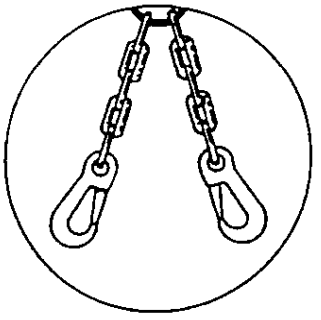

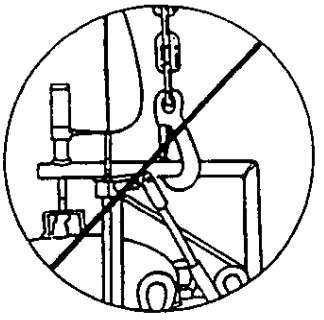

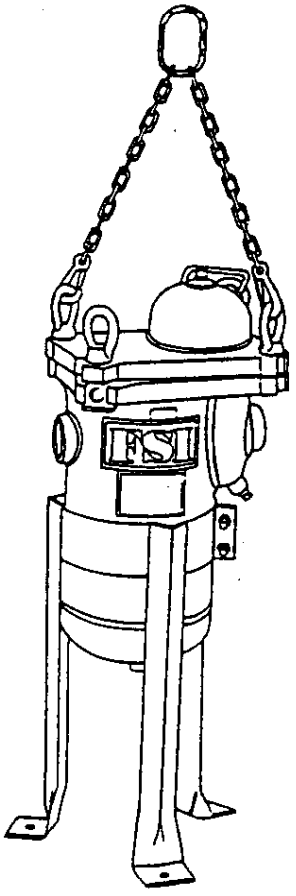

TWO-LEGGED SLING
FOR VESSELS WITH (2)
OR (4) EYENUTS

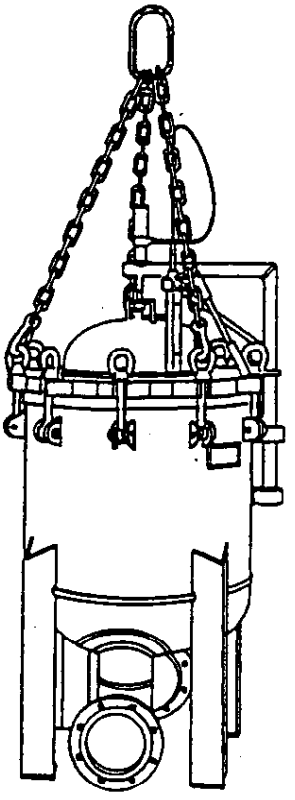

THREE-LEGGED
SLING
EQUALLY SPACED
FOR VESSELS
WITH (3) EYENUTS,
AND (5) OR MORE
EYENUTS

NEVER USE LID SUPPORT (DAVIT) ARM TO LIFT VESSEL.

FIGURE 1

FOR VESSEL WEIGHT, CHECK THE BILL OF LADING

II. PLACEMENT OF MANUAL FOR THE INSTALLATION, OPERATION AND MAINTENANCE OF FILTER VESSELS

THE END USER IS TO LOCATE ONE MANUAL FOR THE INSTALLATION, OPERATION AND MAINTENANCE OF FILTER VESSELS ON EACH VESSEL AT FINAL INSTALLATION SO IT IS VISIBLE AND ACCESSIBLE TO AN OPERATOR.

III. MOUNTING

ALL VESSELS MUST BE PROPERLY BOLTED TO THE FLOOR BEFORE MOVING THE LID. THIS WILL ASSURE VESSEL STABILITY AND PREVENT TIPPING.

NEW FLOOR CONSTRUCTION

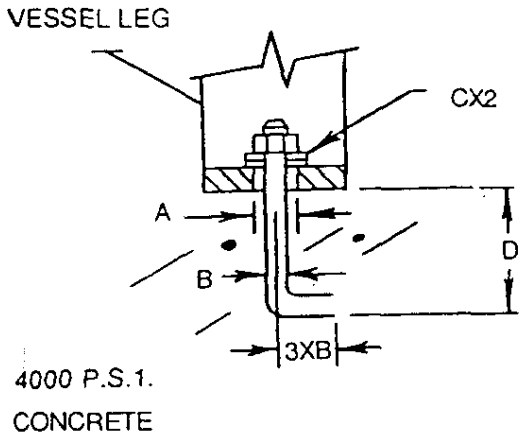

A	B	C			D	
Mounting Plt. Hole Dia.	Anchor Thd. Dia.	Amer. Stnd. Plane Washer			Embed-ment	Min. Pullout
		ID	OD	THK		
17/32 in 13.4 mm	3/8 9.5	7/16 11	1 25.4	.10 2.5	3 76	4000 lb 1814 kg
1 in 25.4 mm	1/2 12.7	9/16 14.3	1-3/8 34.9	.13 3.3	4 101	7500 lb 3402 kg

EXISTING CONCRETE FLOOR

FOR VESSELS PLACED ON EXISTING FLOORS, USE THE FOLLOWING OR AN EQUIVALENT:

RED 1 — CHEM THREADED ANCHOR ROD
RED 1 — CHEM CAPSULES

REFER TO MANUFACTURER'S LITERATURE FOR PART NUMBER AND INSTALLATION INSTRUCTIONS.

ITW RAMSET/RED HEAD
U.S. 12 & LIBERTY TRAIL
MICHIGAN CITY, IN 46360
PHONE NUMBER: 219-874-4217
TELEX NUMBER: 258488
TELEFAX NUMBER: 219-874-7035

IV. PIPING

THE PIPING MATERIAL USED SHOULD BE THE SAME AS THE BASE MATERIAL OF THE VESSEL. IT SHOULD HAVE A RATING EQUAL TO OR GREATER THAN THE PRESSURE AND TEMPERATURE RATING OF THE VESSEL.

V. RELIEF VALVE

IT IS THE RESPONSIBILITY OF THE END USER TO PROTECT SYSTEMS COMPONENTS, SUCH AS THE F.S.I. FILTER, FROM BEING OVER PRESSURIZED. THIS CAN BE ACHIEVED BY INSTALLING A SYSTEM RELIEF VALVE.

VI. PRESSURE GAUGE, TEMPERATURE GAUGE, AND VENT VALVE

F.S.I. DOES NOT SUPPLY THE VESSEL PRESSURE GAUGE, TEMPERATURE GAUGE, OR THE VENT VALVE. IT IS THE RESPONSIBILITY OF THE END USER TO OBTAIN, INSTALL AND MAINTAIN THE PROPER GAUGE, INDICATING VESSEL TEMPERATURE AND INTERNAL VESSEL PRESSURE. *(REFER TO FIGURE 2 - PAGE 6)*

VII. GASKET

WARNING

GASKETS CAN FAIL, CAUSING SERIOUS INJURY AND/OR BLINDNESS.

GASKET MATERIAL MUST BE CHEMICALLY AND TEMPERATURE COMPATIBLE WITH FLUID BEING FILTERED.

NOTE THE OPERATING TEMPERATURE OF A GASKET MATERIAL CHANGES WITH RESPECT TO THE FLUID TEMPERATURE AND CHEMICAL CONCENTRATION.

EACH F.S.I. GASKET IS LABELED TO SHOW THE VESSEL TYPE IT WILL FIT AND THE GASKET MATERIAL.

EXAMPLE:

LABEL FORMAT

VESSEL TYPE → FS 3500, 3000,2500 30021
FSP 4000

GASKET MAT. → VITON

SPECIAL INSTRUCTION LABELS

GASKET INSTALLED
WITH LIPS TOWARD
CENTER OF VESSEL

USE ONLY FSI APPROVED GASKETS.

VIII. SYSTEM CHECK

IT IS ADVISABLE TO HYDRO-STATICALLY TEST THIS VESSEL WITH WATER TO DETERMINE IF THERE ARE ANY LEAKS IN THE SYSTEM.

SHOULD THERE BE ANY QUESTIONS, OR IF ASSISTANCE IS NEEDED IN THE INSTALLATION, OPERATION OR MAINTENANCE OF THIS VESSEL, PLEASE CONTACT THE ENGINEERING DEPARTMENT, FILTER SPECIALISTS, INC., P.O. BOX 735, MICHIGAN CITY, IN 46360. PHONE: (219) 879-3307 — FAX: (219) 879-0744

MAINTENANCE

I. MANUAL LIFTING DEVICE: *REFER TO FIGURE 2 - PAGE 6*

THIS DEVICE CONSISTS OF A THREADED STUD ITEM 16 WELDED TO THE LID AND AN INTERNALLY THREADED CRANK HANDLE IT.15.

A. KEEP THREADS CLEAN AND WELL LUBRICATED WITH A LUBRICANT ACCEPTABLE FOR THE CUSTOMER'S APPLICATION.

B. THREADS SHOULD BE INSPECTED PERIODICALLY FOR WEAR AND TEAR. SHOULD THE WEAR BECOME EXCESSIVE, PARTS SHOULD BE REPLACED BY AUTHORIZED F.S.I. PARTS.

CRANK HANDLE	—	P/N 26004 SPECIFY CARBON STEEL OR STAINLESS STEEL VESSEL
* THREAD STUD	—	P/N 20521 SPECIFY CARBON STEEL OR STAINLESS STEEL VESSEL

C. LUBRICATE THE SUPPORT AND SWIVEL BLOCKS (IT.14) OF THE DAVIT ARM WHICH SUPPORTS THE LID WHEN OPENED.

II. HYDRAULIC LIFTING DEVICE: *REFER TO FIGURE 2- PAGE 6*

F.S.I. OFFERS THREE BASIC LID LIFTING CYLINDER ASSEMBLIES. SEE *TABLE (1) ONE - PAGE 6* FOR REPLACEMENT PARTS.

A. MAINTAIN THE HYDRAULIC RESERVOIR IN THE DUMP (IT.12) WITH HYDRAULIC FLUID. REFER TO THE MANUFACTURER'S MAINTENANCE LITERATURE *(ENCLOSED - SEE PAGE 7)*. THE PUMP RELIEF VALVE IS FACTORY SET TO PREVENT EXCESS PRESSURE (1800 PSI).

B. CHECK THE HYDRAULIC HOSES (IT.13) PERIODICALLY FOR TEAR, ABRASION AND KINKS. REPLACE IF NEEDED.

C. THERE ARE TWO (2) NUTS ATTACHED TO THE END OF THE CYLINDER ROD. THE FIRST IS A JAM NUT (GR5) (IT.10) AND THE SECOND A LOCK NUT WITH A NYLON INSERT (IT.11). IF ITEM 11 IS REMOVED, IT MUST BE REPLACED WITH A NEW ONE TO KEEP IT FROM VIBRATING LOOSE.

D. ON THE LIFT CYLINDER ASSEMBLIES, THE LID LOWERING RATE CAN BE SET BY ADJUSTING THE FLOW CONTROL VALVE MOUNTED IN THE CYLINDER END CAP. ADJUST SPEED SO THAT THE LID COMES DOWN SLOWLY. *(IT. 19, FIGURE 3 - PAGE 8)*

* THREADED STUD MUST BE WELDED BY AN AUTHORIZED A.S.M.E. CODE WELD FACILITY. THE VESSEL MUST BE REINSPECTED AFTER WELDING BY AN AUTHORIZED INSPECTOR.

REPLACEMENT PART LIST FOR LID LIFTING DEVICE						
GENERAL APPLICATION CHART FOR VESSELS RATED AT 150 PSI OR LESS AND NO CORROSION ALLOWANCE. PLEASE HAVE F.S.I. VERIFY THE ACTUAL LIFT CYLINDER ASSEMBLY BY MATCHING IT WITH THE VESSEL SERIAL NUMBER FOR ALL OTHER VESSELS.					GRADE #5	
MODEL NO.	LIFT CYLINDER ASSY. PT. NO.	HYD. PUMP PT. NO.	HYD. HOSE PT. NO.	HYD. CYLINDER PT. NO.	LOCK NUT	LOCK NUT W/NYLON INSERT
252-3500	19982	26220	26222	3/4 BORE X 3 STK #26010	1/4-28 #25115	1/4-28#25116
4000-5000	402184	26221	26222	1-1/8 BORE X 3 STK #26218	3/8-24 #25117	3/8-24 #25118
5500 and up	404342	26221	26222	1-3/8 BORE X 3 STK #26209	#25117	#25118

TABLE 1

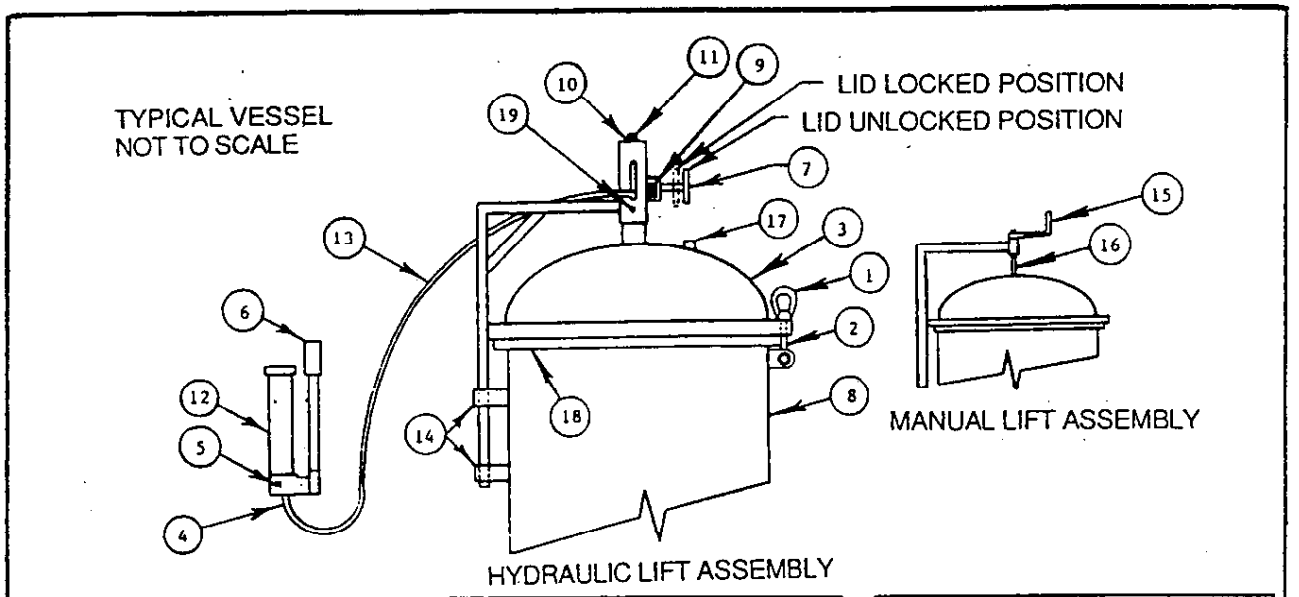

ITEM	DESCRIPTION
1	EYE NUT
2	LID RESTRNG. BOLTS
3	LID
4	PUMP HOSE END
5	PUMP RELEASE VALVE
6	PUMP HANDLE

7	SAFETY PIN
8	VESSEL BODY
9	SPRING
10	JAM NUT
11	LOCK NUT
12	HAND PUMP
13	HOSE

14	SUPPORT BLOCKS davit arm
15	HANDLE
16	STUD
17	VENT
18	COLLAR PLATE
19	FLOW CONTROL VALVE IN CYL. END CAP

FIGURE 2

OPERATION

REMOVAL OF AIR

When hoses, cylinders and other components are connected › build a system, air will be trapped in the system. To .unction properly, the air in the system must be removed. However, the hand pump does require air in the reservoir to prevent a vacuum. If the pump reservoir is totally filled and the vent cap is closed tight, the vacuum created will prevent oil flow out of the pump. Fill reservoirs only to level indicated on the pump end cap.

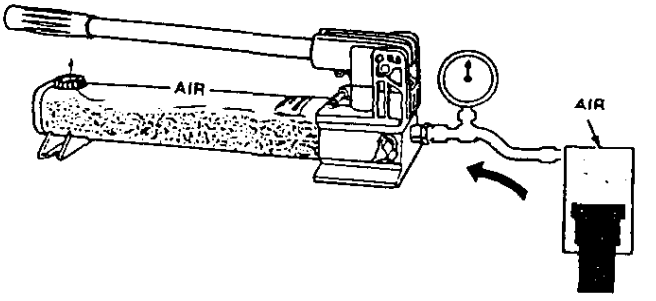

SINGLE ACTING CYLINDER SYSTEMS

1. After all system components are connected to the hand pump, check reservoir oil level. Fill to indicator mark on the end cap. Replace the fill cap and be sure it is closed (not in vent position).
2. Turn pump release valve to closed position. Operate hand pump until cylinder plunger is completely extended.
3. Invert cylinder (plunger end down). Open the pump release valve, as the plunger retracts, the air in the system will be forced into the pump reservoir and replaced by oil. Close the release valve.
4. Turn the cylinder upright. Operate the pump to cycle the cylinder plunger. If air is out of the system, the plunger will advance and retract smoothly. If the plunger is erratic, repeat steps 1 through 4.
5. Open the pump fill cap and check the oil level. Fill to the indicator mark on the end cap.

DOUBLE ACTING CYLINDERS

1. After all system components are connected to the hand pump check pump reservoir oil level. Fill to the indicator mark on the pump end cap. Replace end cap and tighten (not in vent position).
2. Place hand pump in a place where it will be higher than the hydraulic cylinder. Lay the hydraulic cylinder on its side with the couplers facing up.
3. Close the pump release valve (finger tight). Operate the pump to advance and retract the cylinder plunger three or four times.
4. Open pump release valve to retract the cylinder plunger. Check pump oil level. Add oil as necessary to restore correct level in the reservoir.

1. To advance cylinder plunger, turn pump release valve clockwise as illustrated and close **finger-tight.** CAUTION: To avoid release valve damage, do not use tools to tighten valve.
2. Operate pump handle.

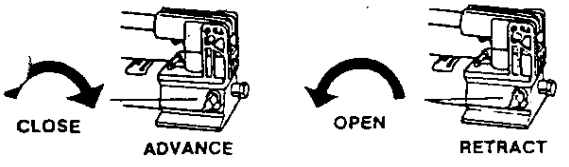

3. To retract cylinder plunger, turn release valve counterclockwise as illustrated.
4. Pump can be operated from horizontal or vertical (as long as hose end is down.)

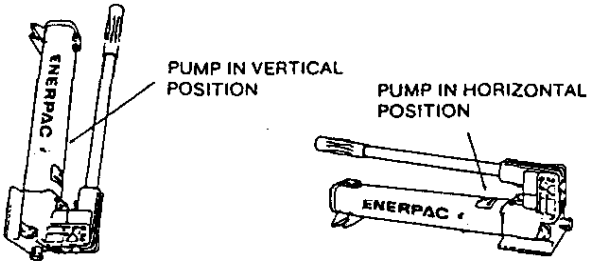

MAINTENANCE

To check oil level in pump, open pump release valve to allow oil in cylinder (if connected) to return to pump. Remove fill cap. Add ENERPAC hydraulic oil until level with mark on rear cap. **DO NOT** overfill. To function properly all hand pumps require air int he reservoir. If oil level is too high the pump will not operate. If hydraulic system is used under extremely dirty conditions, frequently drain pump completely. Refill with clean ENERPAC hydraulic oil. Install fill cap and close it.

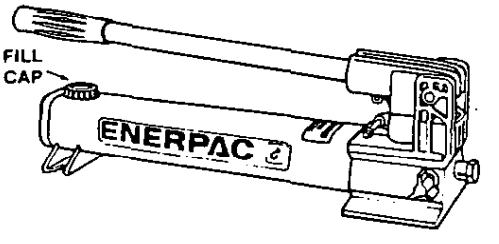

REPLACING COUPLER

ASSEMBLING TO HOSE (FIGURE #1)

Clamp the hexagon nut of the hose fitting in a vise as illustrated. Remove the old coupler or rigid adaptor. Install new coupler clockwise on to hose fitting to a firm fit. Use high quality thread sealer on threads (one wrap only).
A kit has been prepared for the purpose of replacing a worn out seal and may be obtained at your nearest authorized technical service center.

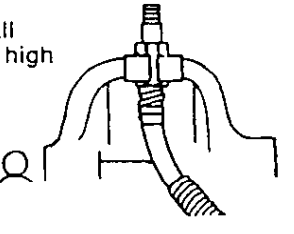

FIGURE #1

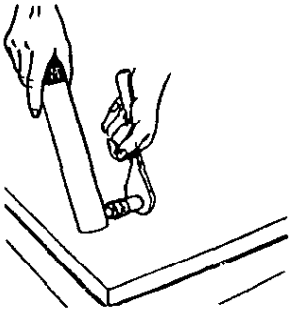

FIGURE #2

ASSEMBLING SPEE-D-COUPLERS TO CYLINDER (FIGURE #2)

Use wrench to unscrew old coupler half from cylinder. Thread new coupler to cylinder and tighten firmly. Use a high quality thread sealant on coupler thread (one wrap only).

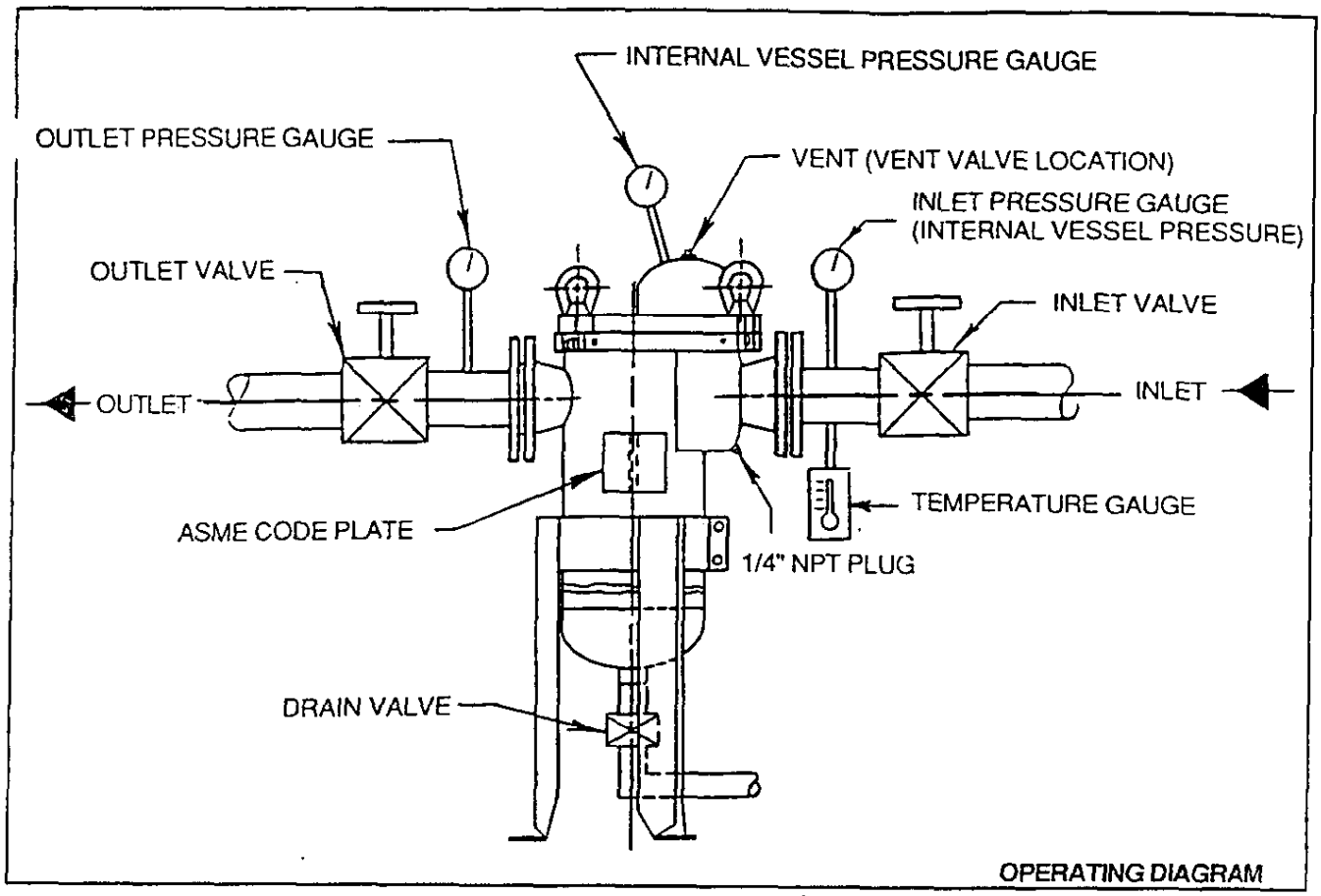

FIGURE 3

LIDS WITH NO LIFT MECHANISM — LID NUTS SHOULD BE UNSCREWED FAR ENOUGH TO ALLOW THE LID TO REST ON THE GASKET FREELY AND PARALLEL TO THE VESSEL COLLAR PLATE.

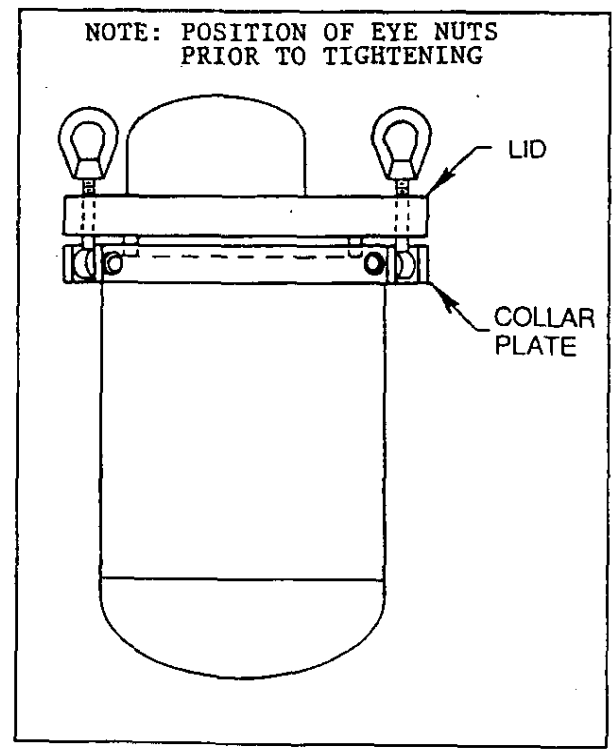

FIGURE 4

OPERATION

⚠ WARNING
HOT AND/OR CHEMICALLY ACTIVE LIQUIDS CAN CAUSE SERIOUS INJURY AND BLINDNESS.

BEFORE OPERATING THIS VESSEL, OPERATOR SHOULD WEAR PROTECTIVE CLOTHING, INCLUDING PROTECTIVE GLOVES AND FACE SHIELD. IF HANDLING HOT LIQUIDS, OPERATORS SHOULD WEAR HEAT RESISTANT CLOTHING, SUCH AS NOMEX GARMENTS, TO PREVENT POSSIBLE BURNS.

REFER TO THE MATERIAL SAFETY DATA SHEET (MSDS) FOR SPECIFIC INFORMATION ON MATERIAL. THE MSDS IS SUPPLIED BY THE MANUFACTURER OF THE MATERIAL.

⚠ WARNING
DO NOT EXCEED THE OPERATING LIMITS OF THIS VESSEL AND GASKET. SERIOUS INJURY OR DEATH CAN RESULT IF LIMITS ARE EXCEEDED.

FOR MAXIMUM PRESSURE, CHECK A.S.M.E. CODE PLATE OF VESSEL.

FOR MAXIMUM TEMPERATURE OF VESSEL, CHECK A.S.M.E. CODE PLATE.

FOR MAXIMUM OPERATING TEMPERATURE OF GASKET, CALL F.S.I., (219) 879-3307. THE MAXIMUM GASKET OPERATING TEMPERATURE CAN CHANGE WITH CHANGES IN FLUID, CHEMICAL COMPOSITION, TEMPERATURE, AND PRESSURE.

NOTE: DO NOT EXCEED THE LESSER OF THE TWO MAXIMUM TEMPERATURES.

I. INITIAL CLOSING OF VESSEL LID
VESSEL MUST BE ISOLATED FROM SYSTEM — PUMP TURNED OFF AND LOCKED OUT; INLET AND OUTLET VALVES CLOSED. *REFER TO FIGURE 3- PAGE 8.*

A. INSERT BASKET INTO SEAT. THE BASKET RIM FLANGE MUST COVER ENTIRE OPENING. IF NOT, THE BASKET MAY COCK AND BE FORCED THROUGH THE OPENING UNDER PRESSURE. *REFER TO FIGURE 5 - PAGE 12.*

B. INSERT NEW FILTER ELEMENTS, MAKING SURE THAT ALL BAGS OR CARTRIDGES ARE PROPERLY SEATED. SNAP RING BAGS MUST HAVE THE SALVAGE ON THE INSIDE OF THE BAG TO PREVENT BYPASS. *REFER TO FIGURE 5 - PAGE 12.*

C. INSPECT GASKET GROOVE AND GASKET. *REFER TO FIGURE 6 - PAGE 13.* IF GASKET IS NICKED OR WORN, REPLACE ONLY WITH F.S.I. REPLACEMENT PARTS. FOR ORDERING REPLACEMENTS, REFER TO VESSEL MODEL NUMBER AND SERIAL NUMBER.

D. INSERT GASKET, MAKING SURE GASKET IS NOT TWISTED, AND IF A LIP TYPE GASKET IS USED, THE LIPS ARE POINTING INWARD AS SHOWN IN *FIGURE 6 - PAGE 13*. IF GASKET WANTS TO ROLL OUT OF GROOVE, STRETCH GASKET SLIGHTLY BY HAND, INSPECT GASKET SEAM, AND REFIT INTO GROOVE.

E. POSITION LID FOR CLOSING.

1. LIDS WITH NO LIFT MECHANISM — LID NUTS MUST BE UNSCREWED FAR ENOUGH TO ALLOW THE LID TO REST ON THE GASKET FREELY AND PARALLEL TO THE VESSEL COLLAR PLATE. *REFER TO FIGURE 4 - PAGE 8.*

2. LIDS WITH A CRANK. *REFER TO FIGURE 3 - PAGE 8.*

   a. ROTATE LID OVER VESSEL SO THE EYE NUT AND BOLT BRACKET ARE IN LINE.

   b. TURN CRANK TO LOWER LID.

   c. REALIGN BRACKETS, IF NECESSARY, BEFORE LID SETS DOWN ON VESSEL BODY.

3. LIDS WITH HYDRAULIC LIFTS. *REFER TO FIGURE 2 - PAGE 6.*

   a. REFER TO STEPS E2a, E2b, and E2c.

   b. HOLD HAND PUMP IN VERTICAL POSITION WITH HOSE END DOWN AND RAISE LID SLIGHTLY.

   c. WITH ONE HAND, PULL SAFETY PIN OUT TO DISENGAGE IT. HOLD IN THIS POSITION.

   d. WITH OTHER HAND, CRACK OPEN THE PUMP RELEASE VALVE.

   e. LOWER LID UNTIL IT ALMOST TOUCHES GASKET, RELEASE SAFETY PIN, ALIGN EYEBOLT AND EYENUT BRACKETS, AND CONTINUE TO LOWER LID UNTIL IT RESTS FREELY ON THE GASKET.

⚠ **WARNING**
A FALLING LID CAN CAUSE SERIOUS INJURY AND LOSS OF LIMB. NEVER PLACE HANDS, FINGERS, OR LIMBS BETWEEN LID AND VESSEL.

F. ENGAGE ALL BOLTS. HAND TIGHTEN NUTS. *REFER TO FIGURE 7 - PAGE 13.*

G. MODERATELY TORQUE NUTS AT 180° TO EACH OTHER, ROTATING AROUND THE VESSEL UNTIL TIGHT. *REFER TO FIGURE 7 - PAGE 13.*

H. CLOSE VENT VALVE. *REFER TO FIGURE 3 - PAGE 8.*

I. TURN PUMP ON.

J. OPEN INLET VALVE SLOWLY AND OBSERVE FOR LEAKS. SHOULD ANY LEAKS APPEAR, CLOSE VALVE IMMEDIATELY AND CONTINUE WITH PART II. *REFER TO FIGURE 2 - PAGE 6.*

K. IF NECESSARY, FILL VESSEL WITH PRODUCT BY EVACUATING THE AIR VIA THE VENT VALVE.

L. OPEN OUTLET VALVE. *REFER TO FIGURE 3 - PAGE 8.*

II. OPENING AND CLOSING OF THE VESSEL LID

ADHERE TO THE FOLLOWING SEQUENCE. *REFER TO FIGURE 2 - PAGE 6.*

⚠ DANGER
DO NOT OPEN A VESSEL UNDER PRESSURE. ESCAPING FLUID UNDER PRESSURE CAN CAUSE SERIOUS INJURY AND BLINDNESS.

A. BEFORE OPENING VESSEL

1. TURN OFF PUMP AND LOCK IT OUT
2. CLOSE INLET AND OUTLET VALVE

B. OPEN VENT VALVE. MAKE SURE THAT THE VALVE OUTLET IS SO PIPED THAT ESCAPING FLUIDS ARE SO DIRECTED TO PREVENT PERSONAL INJURY OF THE OPERATOR AND SURROUNDING AREA.

C. CHECK PRESSURE GAUGE TO MAKE SURE THAT THE ISOLATED VESSELS' INTERNAL PRESSURE IS ZERO PSI GAUGE. *REFER TO FIGURE 3 - PAGE 8.*

D. DRAIN FLUID FROM VESSEL BY GRAVITY FLOW THROUGH DRAIN VALVE. CLOSE DRAIN VALVE. EVACUATION CAN BE ASSISTED WITH PRESSURIZATION. *REFER TO "BLOW DOWN PROCEDURES", PAGE 14.*

E. LOOSEN LID NUTS AND SWING NUT AND BOLTS FREE OF LID.

F. LIFT LID.

LIDS WITH HYDRAULIC LIFTS:
HOLD HAND PUMP VERTICALLY WITH HOSE END DOWN. CLOSE PUMP RELEASE VALVE AND PUMP UNTIL LID LIFTS HIGH ENOUGH TO ENGAGE SPRING LOADED SAFETY PIN.

⚠ WARNING
A FALLING LID CAN CAUSE LOSS OF LIMB. SAFETY PIN MUST BE ENGAGED WHEN LID IS OPEN.

G. ROTATE LID OFF OF VESSEL.

H. REMOVE FILTER BAG OR CARTRIDGES WITH CAUTION.

I. INSPECT BASKET FOR ROUNDNESS AND FLANGE CONDITION.

J. VERIFY THAT BASKET AND BAG BEARING SURFACES ARE CLEAN AND FREE OF NICKS.

K. INSERT NEW FILTER ELEMENTS, MAKING SURE THAT ALL BAGS OR CARTRIDGES ARE PROPERLY SEATED. SNAP RING BAGS MUST HAVE SALVAGE ON INSIDE OF BAG. *REFER TO FIGURE 5 - PAGE 12.*

L. REMOVE GASKET, CLEAN GASKET GROOVE. IF GASKET IS WORN OR NICKED, REPLACE ONLY WITH F.S.I. REPLACEMENT PARTS. FOR CORRECT REPLACEMENTS, REFER TO THE VESSEL MODEL NUMBER AND SERIAL NUMBER. USE ONLY F.S.I. AUTHORIZED GASKETS.

M. ROTATE LID OVER VESSEL AND ALIGN BOLT AND NUT BRACKETS.

N. CLOSE LID. SAME AS E1, E2 AND E3, - *PAGE 10.*

O. SAME AS I. F.

P. SAME AS I. G.

Q. SAME AS I. H.

R. SAME AS I.L.

S. SAME AS I. J.

T. SAME AS I. K.

U. SAME AS I.L.

IF A VESSEL STILL LEAKS, DEPRESSURIZE VESSEL AND RETORQUE BOLTS ACCORDING TO STEP I. G. - *PAGE 10.* IF VESSEL LEAKAGE CONTINUES, CALL F.S.I.

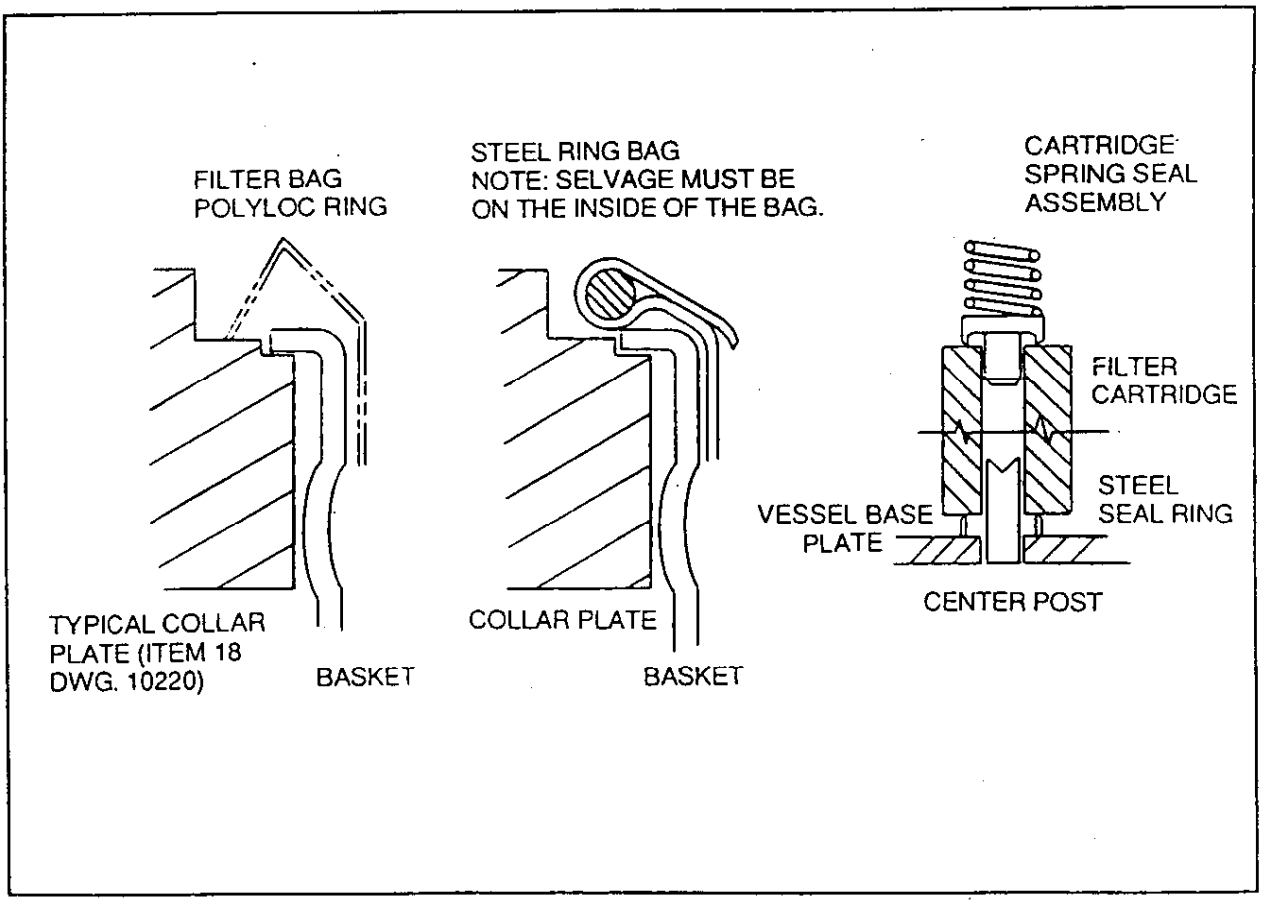

FIGURE 5

GASKET INSTALLATION

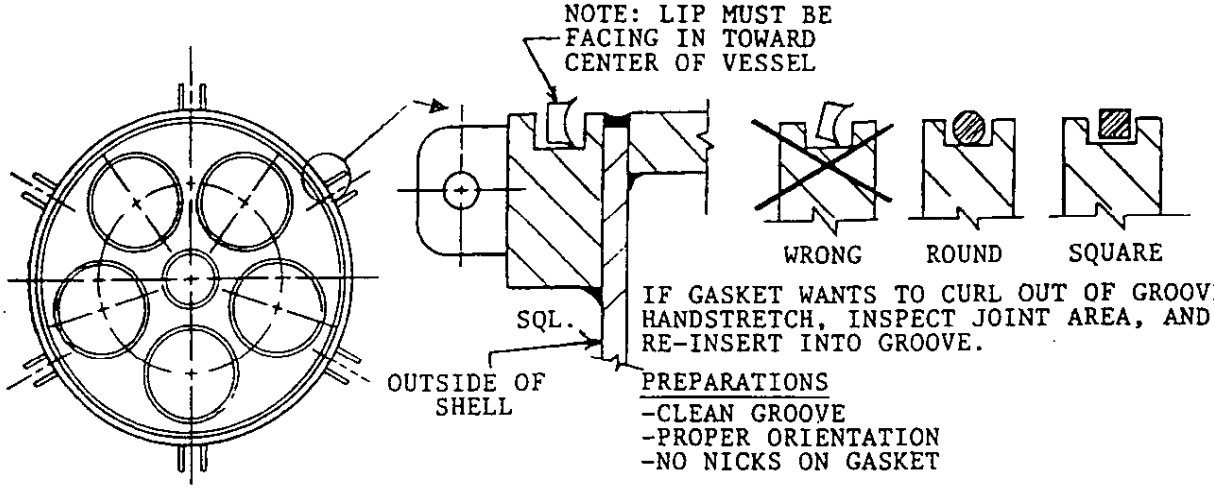

FIGURE 6

BOLT TIGHTENING SEQUENCE

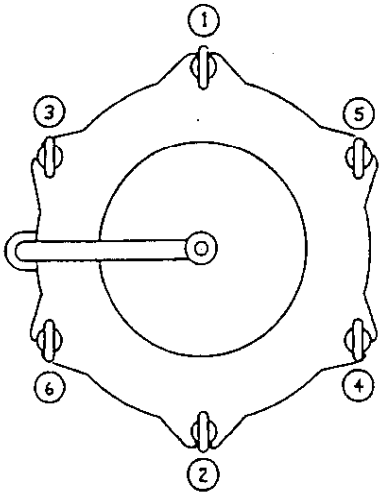

NOTE: EXCESSIVE TORQUE SHOULD NOT BE NECESSARY WHEN USING FSI SELF ENERGIZING GASKETS.

FIGURE 7

STANDARD FSI VESSELS ARE DESIGNED TO USE GASKETS MADE OF SELF ENERGIZING MATERIAL, SUCH AS BUNA, EPR OR VITON. THE TORQUE REQUIREMENTS TO SEAL A VESSEL WITH SUCH GASKETS IS MINIMAL. IT IS, THEREFORE, NOT NECESSARY TO USE EXTENSIONS OR CHEATER BARS WHEN TORQUING EYENUTS. FSI DOES NOT RECOMMEND THE USE OF GASKETS MADE OF NON-ENERGIZING MATERIAL OR ROPE TYPE GASKETS. THEY MAY REQUIRE EXCESSIVE TIGHTENING TORQUE. DUE TO THE MANY VARIABLES THAT INFLUENCE TORQUE, EXACT VALUES ARE NOT GIVEN HEREIN. FOR GENERAL TORQUE VALUES APPLICABLE TO YOUR PARTICULAR VESSEL, CALL FILTER SPECIALISTS AT 1-800-348-3205.

BLOW DOWN PROCEDURE

TO AID FILTER ELEMENT CHANGES, THE LIQUID IN THE VESSEL CAN BE EVACUATED PRIOR TO THE CHANGE.

WARNING: THE GAS USED FOR BLOW DOWN MUST BE STABLE IN THE ENVIRONMENT OF THE FLUID BEING EVACUATED.

1. CLOSE INLET VALVE. *REFER TO FIGURE 3 - PAGE 8.*
2. CLOSE OUTLET VALVE.
3. OPEN VENT VALVE.
4. CHECK GAUGE — INTERNAL PRESSURE MUST BE ZERO.
5. OPEN DRAIN VALVE.
6. CLOSE VENT.
7. CONNECT GAS TO VESSEL VIA VENT VALVE. USE ONLY IF GRAVITY EVACUATION DOES NOT YIELD DESIRED RESULTS.
8. OPEN VENT VALVE SLOWLY.
9. CLOSE VENT VALVE AFTER METERING OUT FLUID.
10. DISCONNECT GAS.
11. CLOSE DRAIN VALVE.
12. MAKE SURE INTERNAL PRESSURE IS ZERO AND CONTINUE WITH OPENING INSTRUCTIONS.

FILTER IN OPERATION

ONCE THE FILTER IS OPERATIONAL AND IN USE, THE DIFFERENTIAL PRESSURE SHOULD BE CHECKED REGULARLY. IT IS SUGGESTED THAT WHEN THE DIFFERENTIAL PRESSURE ACROSS THE FILTER ELEMENTS REACHES A PREDETERMINED AMOUNT, THE ELEMENTS BE CHANGED. IF THE DIFFERENTIAL PRESSURE SUDDENLY DROPS, STOP FILTRATION IMMEDIATELY AND CHECK BAGS FOR PROPER SEAL OR RUPTURE.

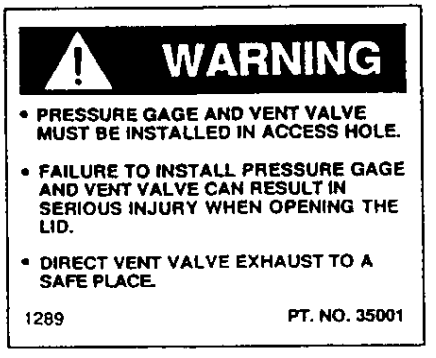

WARNING

- GASKET SEAL MAY LEAK OR SQUIRT FLUID UNDER PRESSURE IF THE LID OPENING AND CLOSING INSTRUCTIONS ARE NOT FOLLOWED.
- SQUIRTING FLUID CAN CAUSE SERIOUS INJURY OR BLINDNESS.
- READ THE MANUAL FOR INSTALLATION, OPERATION, AND MAINTENANCE OF FILTER VESSELS.
- WEAR PROTECTIVE CLOTHING.
- WEAR FACE SHIELD.
- BEFORE OPENING, TURN PUMP OFF AND LOCK IT OUT.
- CLOSE INLET AND OUTLET VALVE.
- OPEN VENT SLOWLY-DIRECT EXHAUST TO SAFE PLACE.
- INTERNAL PRESSURE SHOULD BE ZERO(0) PSI GAGE.
- DRAIN FLUID VIA DRAIN VALVE.
- CLOSE DRAIN VALVE.
- UNBOLT LID LUGS.
- LIFT LID.
- ENGAGE LID SAFETY PIN (IF APPLICABLE).
- ROTATE LID, UNCOVERING VESSEL.
- CHANGE FILTER ELEMENT.
- REMOVE GASKET, CLEAN GASKET GROOVE AND GASKET.
- INSPECT GASKET GROOVE AND LID SEALING AREA FOR DAMAGE.
- REPLACE DAMAGED PARTS WITH F.S.I. REPLACEMENT PARTS ONLY.
- REPOSITION LID, DISENGAGE SAFETY PIN AND LOWER LID ONTO VESSEL SLOWLY.
- REPLACE WASHERS UNDER NUTS IF NECESSARY.
- ENGAGE ALL BOLTS, HAND TIGHTEN NUTS.
- NUT AND BOLT THREADS TO BE FREE OF RUST AND FOREIGN MATTER.
- MODERATELY TORQUE NUTS AT 180° TO EACH OTHER ROTATING AROUND VESSEL.
- CLOSE VENT VALVE.
- ACTIVATE PUMP.
- OPEN INLET VALVE SLOWLY. OBSERVE FOR LEAKS. IF LEAK APPEARS, CLOSE VALVE AND START OVER.
- IF THERE ARE NO LEAKS, OPEN OUTLET VALVE SLOWLY.

1289 PT. NO. 35004

WARNING

- VESSEL AND OR GASKET CAN FAIL IF OPERATING LIMITS ARE EXCEEDED.
- A FAILURE CAN CAUSE SERIOUS INJURY, BLINDNESS, OR DEATH.
- DO NOT EXCEED MAXIMUM OPERATING PRESSURE PER VESSEL CODE PLATE.
- CHECK TEMPERATURE RANGE ON VESSEL CODE PLATE.
- CHECK TEMPERATURE RANGE OF GASKET MATERIAL WITH RESPECT TOP FLUID BEING FILTERED.
- DO NOT EXCEED THE LESSER OF THE TWO OPERATING TEMPERATURES.
- SECURE LID BY TIGHTENING LID EYENUTS.
- READ THE MANUAL FOR THE INSTALLATION, OPERATION, AND MAINTENANCE OF FILTER VESSELS.

1289 PT. NO. 35000

WARNING

- RAISED LID MAY FALL IN THE EVENT OF A HYDRAULIC OR MECHANICAL FAILURE.
- A FALLING LID CAN SERIOUSLY INJURE OR CAUSE LOSS OF LIMB.
- REFER TO F.S.I. OPERATING & MAINTENANCE INSTRUCTIONS.
- READ AND UNDERSTAND THE FOLLOWING INSTRUCTIONS:
  - NO BODILY PARTS UNDER THE LID AT ANY TIME.
  - WEAR EYE PROTECTION IN CASE OF HYDRAULIC COMPONENT RUPTURE.
  - ENGAGE LID SAFETY LATCH WHERE APPLICABLE.

1289 PT. NO. 35003

WARNING

- IF IMPROPERLY USED THIS VESSEL CAN CAUSE SERIOUS INJURY, BLINDNESS OR DEATH.
- READ ALL WARNING LABELS AND MANUAL FOR INSTALLATION, OPERATING/MAINTENANCE OF FILTER VESSEL BEFORE USE.
- FOR ADDITIONAL MANUALS CALL F.S.I. 1-800-348-3205

PT. NO. 35005

BFN 11, BFN 12, BFN 13, BFN 14

DIMENSIONS NOMINAL, NOT TO BE USED FOR INSTALLATION PURPOSES.

SPECIFICATIONS

Model #	No. of Bags	Bag Size	Surface area per bag, ft²	Standard Inlet/Outlet*	Max. GPM**
BFN 11	1	1 – 7" Dia. x 16 L	2.0	2"	80
BFN 12	1	2 – 7" Dia. x 32 L	4.4	2"	200
BFN 13	1	3 – 4" Dia. x 9 L	0.5	1"	25
BFN 14	1	4 – 4" Dia. x 15 L	1.0	1"	40

*Inlet/Outlet sizes to meet customer specifications are available.

**Max. flow based on water at 1.0 PSI △ P clean through vessel only. Flows are reduced significantly when filtering viscous liquids.

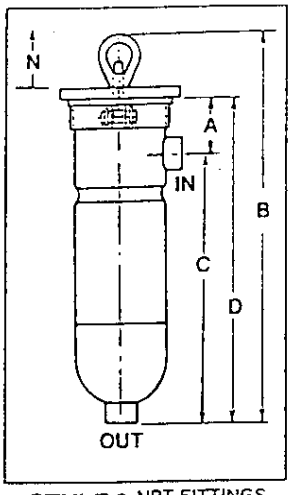

STYLE 2 NPT FITTINGS SIDE INLET – BOTTOM OUTLET

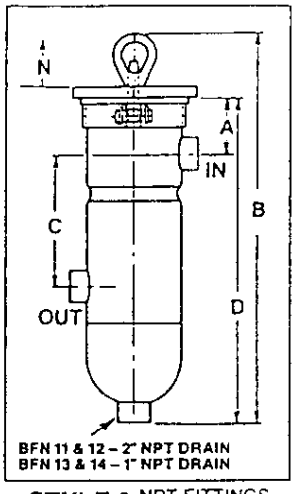

STYLE 6 NPT FITTINGS SIDE INLET – SIDE OUTLET

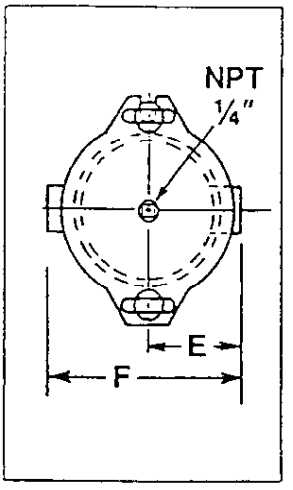

TOP
BFN 13 & 14 – 150 #

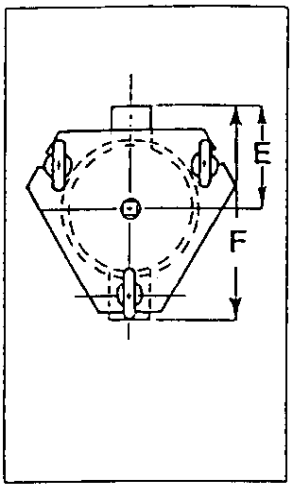

TOP
BFN 13 & 14 – 300#
BFN 11 & 12 – 150#

BFN VESSEL DIMENSIONS

*	NPT	A	B	C	D	E	G	N
BFN-11 (S or P) STYLE 2	2"	4⅝"	28⅜"	20⅛"	24¾"	5"	7⅞"	16"
BFN-12 (S or P) STYLE 2	2"	4⅝"	42⅞"	34⅝"	39¼"	5"	7⅞"	30"
BFN-13 (S or P) STYLE 2	1"	2½"	18 9/16"	13"	15 9/16"	3⅜"	4⅞"	9"
BFN-14 (S or P) STYLE 2	1"	2½"	23 13/16"	18¼"	20 13/16"	3⅜"	4⅞"	15"

*	NPT	A	B	C	D	E	F	G	N
BFN-11 (S or P) STYLE 6	2"	4⅝"	28⅜"	14¼"	24¾"	5"	10"	7⅞"	16"
BFN-12 (S or P) STYLE 6	2"	4⅝"	42⅞"	28¾"	39¼"	5"	10"	7⅞"	30"
BFN-13 (S or P) STYLE 6	1"	2½"	18½"	5⅛"	15½"	3⅜"	6¾"	4⅞"	9"
BFN-14 (S or P) STYLE 6	1"	2½"	23¾"	10⅝"	20¾"	3⅜"	6¾"	4⅞"	15"

*Inlet/Outlet sizes to meet customer specifications are available.

#1 SIZE FILTER BAG PERFORMANCE

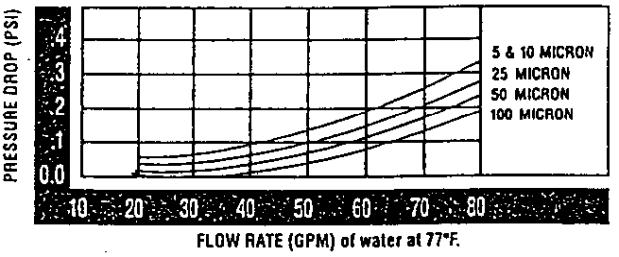

#4 SIZE FILTER BAG PERFORMANCE

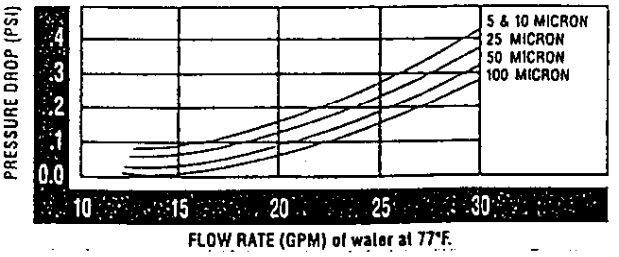

Repcco

2140-300 N.E. 36th Ave.

(800) 277-3279
(904) 867-7482

BULLETIN NO. A-27

OPERATING INSTRUCTIONS and PARTS LIST

Magnehelic® Differential Pressure Gage

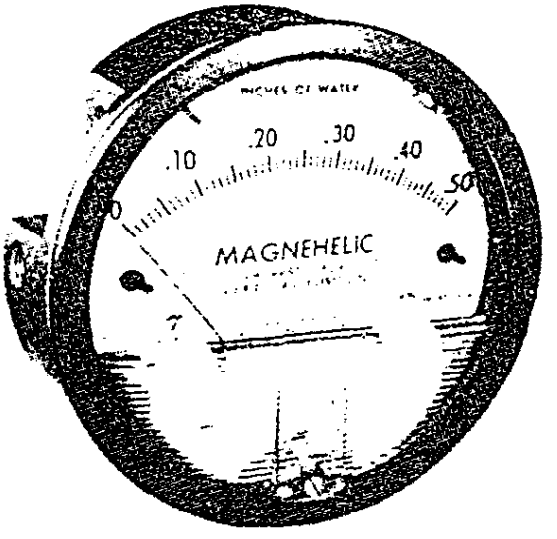

SPECIFICATIONS

Dimensions: 4-3/4" dia. X 2-3/16" deep.

Weight: 1 lb. 2 oz.

Finish: Baked dark gray enamel.

Connections: 1/8 N.P.T. high and low pressure taps, duplicated, one pair side and one pair back.

Accuracy: Plus or minus 2% of full scale, at 70°F. (Model 2000-0, 3%; 2000-00, 4%).

Pressure Rating: 15 PSI.

Ambient Temperature Range: 20° to 140°F.

Standard gage accessories include two 1/8" N.P.T. plugs for duplicate pressure taps, two 1/8" pipe thread to rubber tubing adapters, and three flush mounting adapters with screws.

Caution: For use with air or compatible gases only.

For repeated over-ranging or high cycle rates, contact factory.

Hydrogen Gas Precautionary Note: The rectangular rare earth magnet used in the standard gage may not be suitable for use with hydrogen gas since a toxic and explosive gas may form. For hydrogen service, consult the factory for an alternate gage construction.

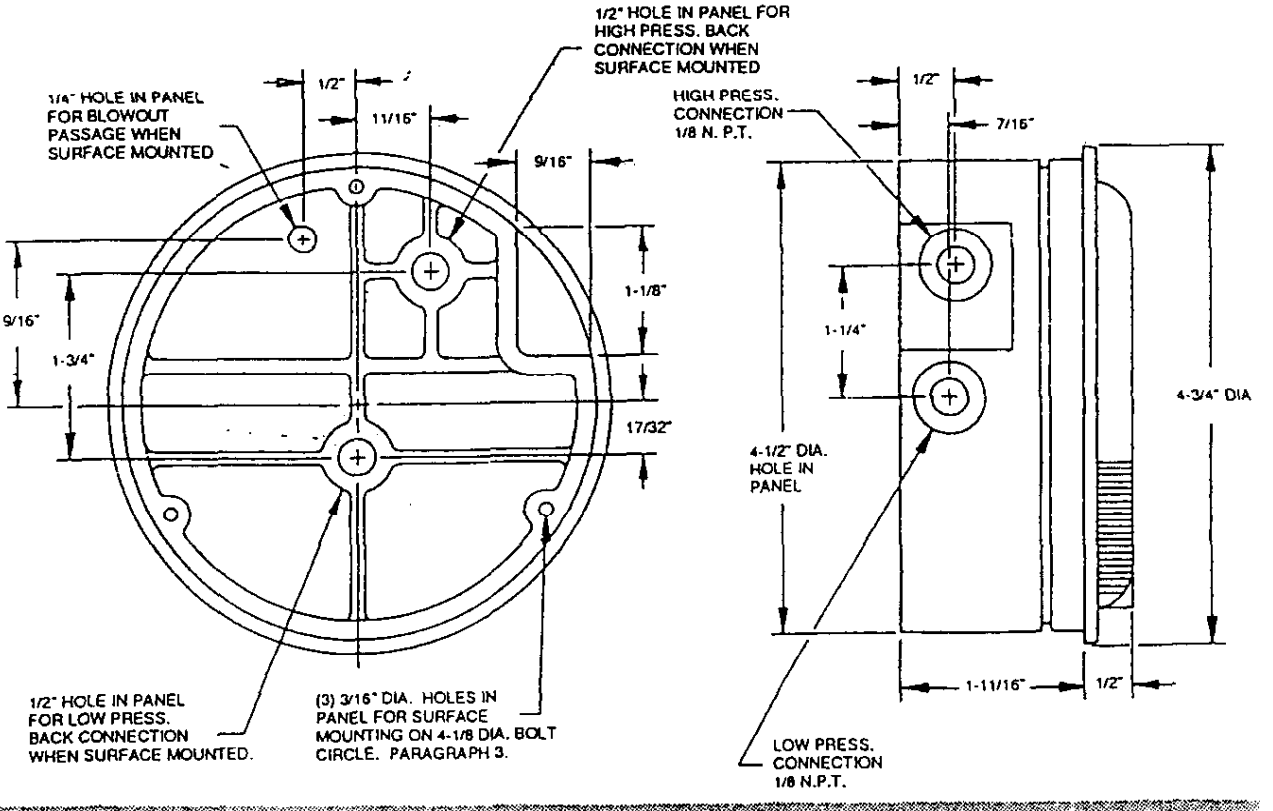

DWYER INSTRUMENTS, INC.
Telephone 219/879-8000
Fax 219/872-9057

Overpressure Protection: Standard Magnehelic gages are rated for a maximum pressure of 15 psig and should not be used where that limit can be exceeded. Newer models employ a rubber plug on the rear which will unseat and vent the gage at approximately 25 psig. When surface mounting units with this feature, provide a vent hole, as indicated on the dimension drawing, or allow a minimum 1/8" clearance when flush mounting.

1. Select a location free from excessive vibration and where the ambient temperature will not exceed 140°F. Also, avoid direct sunlight which accelerates discoloration of the clear plastic cover. Sensing lines may be run any necessary distance. Long tubing lengths will not affect accuracy but will increase response time slightly. Do not restrict lines. If pulsating pressures or vibration cause excessive pointer oscillation, consult the factory for ways to provide additional damping.

2. All standard Magnehelic gages are calibrated with the diaphragm vertical and should be used in that position for maximum accuracy. If gages are to be used in other than vertical position, this should be specified on the order. Many higher range gages will perform within tolerance in other positions with only rezeroing. Low range Model 2000-00 and metric equivalents must be used in the vertical position only.

3. Surface Mounting

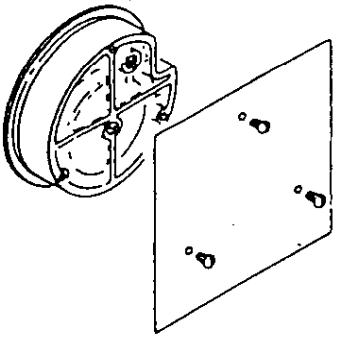

Locate mounting holes, 120° apart on a 4-1/8" dia. circle. Use No. 6-32 machine screws of appropriate length.

4. Flush Mounting

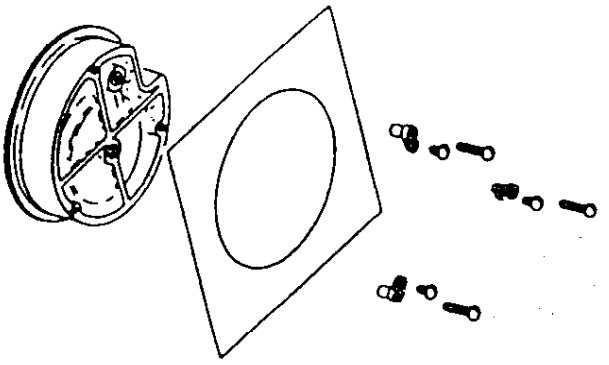

Provide a 4½" dia. opening in panel. Insert gage and secure in place with No. 6-32 machine screws of appropriate length, with adaptors, Part No. 360c, firmly secured in place. To mount gage on 1¼"-2" pipe, order optional A-610 pipe mounting kit.

5. To zero the gage after installation

Set the indicating pointer exactly on the zero mark, using the external zero adjust screw on the cover at the bottom. Note that the zero check or adjustment can only be made with the high and low pressure taps both open to atmosphere.

Operation

Positive Pressure: Connect tubing from source of pressure to either of the two high pressure ports. Plug the port not used. Vent one or both low pressure ports to atmosphere.

Negative Pressure: Connect tubing from source of vacuum or negative pressure to either of the two low pressure ports. Plug the port not used. Vent one or both high pressure ports to atmosphere.

Differential Pressure: Connect tubing from the greater of two pressure sources to either high pressure port and the lower to either low pressure port. Plug both unused ports.

When one side of gage is vented in a dirty, dusty atmosphere, we suggest an A-331 Filter Vent Plug be installed in the open port to keep inside of gage clean.

a. For portable use or temporary installation, use 1/8" pipe thread to rubber tubing adapter and connect to source of pressure with rubber or Tygon tubing.

b. For permanent installation, 1/4" O.D., or larger, copper or aluminum tubing is recommended. See accessory bulletin S-101 for fittings.

MAINTENANCE

Maintenance: No lubrication or periodic servicing is required. Keep case exterior and cover clean. Occasionally disconnect pressure lines to vent both sides of gage to atmosphere and re-zero. Optional vent valves, (bulletin S-101), should be used in permanent installations.

Calibration Check: Select a second gage or manometer of known accuracy and in an appropriate range. Using short lengths of rubber or vinyl tubing, connect the high pressure side of the Magnehelic gage and the test gage to two legs of a tee. Very slowly apply pressure through the third leg. Allow a few seconds for pressure to equalize, fluid to drain, etc., and compare readings. If accuracy unacceptable, gage may be returned to factory for recalibration. To calibrate in the field, use the following procedure.

Calibration:

1. With gage case, P/N 1, held firmly, loosen bezel, P/N 4 by turning counterclockwise. To avoid damage, a canvas strap wrench or similar tool should be used.
2. Lift out plastic cover and "O" ring.
3. Remove scale screws and scale assembly. Be careful not to damage pointer.
4. The calibration is changed by moving the clamp, P/N. 70-b. Loosen the clamp screw(s) and move slightly toward the helix if gage is reading high, and away if reading low. Tighten clamp screw and install scale assembly.
5. Place cover and O-ring in position. Make sure the hex shaft on inside of cover is properly engaged in zero adjust screw, P/N 230-b.
6. Secure cover in place by screwing bezel down snug. Note that the area under the cover is pressurized in operation and therefore gage will leak if not properly tightened.
7. Zero gage and compare to test instrument. Make further adjustments as necessary.

Caution: If bezel binds when installing lubricate threads sparingly with light oil or molybdenum disulphide compound.

Warning: Attempted field repair may void your warranty. Recalibration or repair by the user is not recommended. For best results, return gage to the factory. Ship prepaid to:

Dwyer Instruments, Inc.
Attn. Repair Department
55 Ward Street
Wakarusa, IN 46573

Trouble Shooting Tips:

• *Gage won't indicate or is sluggish.*

1. Duplicate pressure port not plugged.
2. Diaphragm ruptured due to overpressure.
3. Fittings or sensing lines blocked, pinched, or leaking.
4. Cover loose or "O" ring damaged, missing.
5. Pressure sensors, (static tips, Pitot tube, etc.) improperly located.
6. Ambient temperature too low. For operation below 20°F order gage with low temperature, (LT) option.

• *Pointer stuck-gage can't be zeroed.*

1. Scale touching pointer.
2. Spring/magnet assembly shifted and touching helix.
3. Metallic particles clinging to magnet and interfering with helix movement.
4. Cover zero adjust shaft broken or not properly engaged in P/N 230-b adjusting screw.

We generally recommend that gages needing repair be returned to the factory. Parts used in various sub-assemblies vary from one range of gage to another, and use of incorrect components may cause improper operation or failure. Gages repaired at the factory are carefully calibrated and tested to assure "like-new" operation. After receipt and inspection, we will be happy to quote repair costs before proceeding.

Consult factory for assistance on unusual applications or conditions.

Use with air or compatible gases only.

Magnehelic® Gage EXPLODED VIEW Series 2000

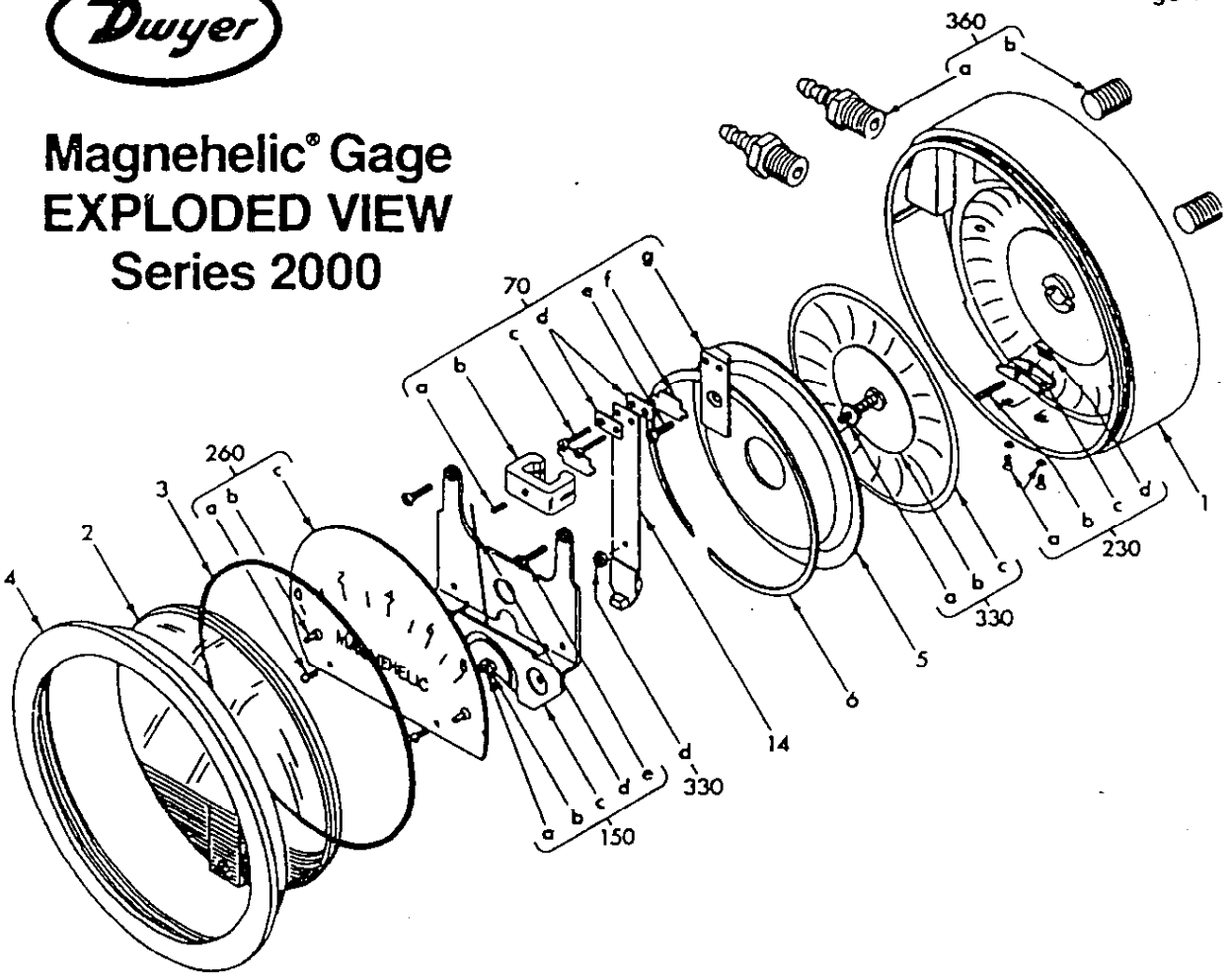

1. Case
2. Cover with zero adjust assy.
3. "O" ring seal
4. Bezel
5. Diaphragm sealing plate
6. Retaining ring
70. Range Spring assembly
   a. Clamp set screw
   b. Clamp
   c. Mounting screws (2 req'd)
   d. Clamping shoe (2 req'd)
   e. Clamp plate screw
   f. Spacer (2 req'd)
   g. Clamp plate
14. Range Spring with magnet
150. Wishbone Assembly – consists of:
   a. Front jewel
   b. Locking nut
   c. Wishbone
   d. Pointer
   e. Mounting screws (2 req'd)
   f. Helix assembly (not shown)
   g. Pivots (2 req'd) (not shown)
   h. Rear jewel (not shown)
230. Zero adjust assembly – consists of:
   a. Foot screws with washers (2 req'd)
   b. Adjust screw
   c. Foot
   d. Finger
260. Scale Assembly – consists of:
   a. Mounting screws (2 req'd)
   b. Bumper pointer stop (2 req'd)
   c. Scale
330. Diaphragm Assembly – consists of:
   (Arbor press needed to install)
   a. Linkage assy., complete
   b. Front plate
   c. Diaphragm
   d. Rear plate (not shown)
   e. Plate washer (not shown)
360. Mounting Hardware Kit
   a. Adapter – pipe plug ⅛" NPT to rubber tubing – (2 req'd)
   b. Pipe plug ⅛" NPT – (2 req'd)
   c. Mounting lug (3 req'd)
   d. Long screw (3 req'd)
   e. Short screw (3 req'd)

Ordering Instructions:

When corresponding with the factory regarding Magnehelic® gage problems, refer to the call-out numbers in this view. Be sure to include model number, pressure range, and any special options. Field repair is not recommended; contact the factory for repair service information.

© Copyright 1989 Dwyer Instruments, Inc.
Litho In U.S.A. 9/89
12-440212-04

SERIES 1900 PRESSURE SWITCH
Installation and Operating Instructions

Set points from 0.07" to 20" W.C. Repetitive accuracy within 3%, U.L. and C.S.A. listed, F.M. approved.

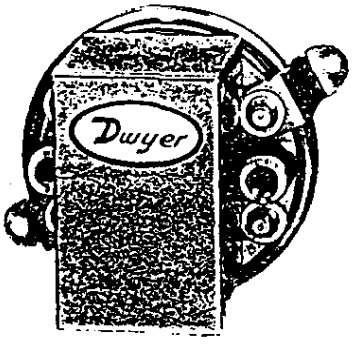

Series 1910 pressure switch. All pressure and electrical connections and set point adjustments are on one side for easy installation.

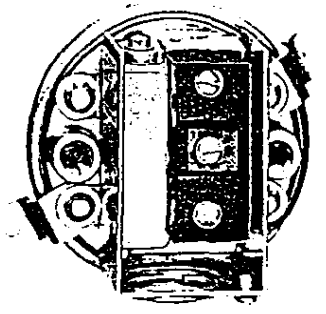

Series 1910 switch with conduit enclosure off. Shows electric switch and set point adjustment screw.

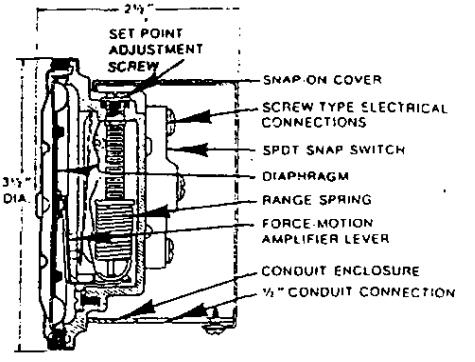

The Dwyer-engineered force-motion amplifier increases the leverage of diaphragm movement and results in a switch with excellent sensitivity and repeatability.

Advanced design and precision construction permit these switches to perform many of the tasks of larger, costlier units. Designed for air conditioning service, they also serve *many fluidics, refrigeration, oven and dryer applications.* For use with air and non-combustible gases. Series 1900 switches are available with set points of 0.07 to 20 inches water column. Set point adjustment can be made easily — before or after installation. Range screw is inside conduit enclosure to help prevent tampering. For easy mounting and access, pressure and electrical connections and set point adjustment are located on one side. This permits installation in corners or spaces too small for other switches.

PHYSICAL DATA

Temperature limits: 32°F. (−30° for dry air), to 180°F.
Maximum surge pressure: 10 psig.
Rated pressure: 45" H_2O.
Pressure connections: ⅛" NPT.
Electrical rating: 15 amps, 120-480 volts, 60 Hz. A.C. Resistive ⅛ H.P. @ 125 volts, ¼ H.P. @ 250 volts, 60 Hz. A.C. See INSTALLATION for de-rating information.
Wiring connections: 3 screw type, common, normally open *and normally closed.*
Set point adjustment: Screw type inside conduit enclosure.
Housing: Zinc die casting and steel stamping. Zinc plated for 200 hour salt spray resistance.
Diaphragm: Molded Silicone rubber.
Calibration spring: Stainless steel.
Weight: 1 lb.

SPECIAL MODELS AND ACCESSORIES

Dwyer Accessory Part No. A-329

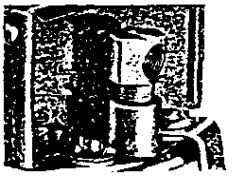

Special close coupled street elbow for right angle pressure connections. Can be installed on switch anytime. Zinc plated aluminum.

Weatherproof Enclosure:

16 ga. steel enclosure for unusually wet or oily conditions. Withstands 200 hour salt spray test. Gasketed cover. Weight 5 lbs. Switch must be *installed at factory.* Specify "WP" in addition to switch catalog number.

Explosion-Proof Housing:

Cast iron base and aluminum dome cover. Approximate weight 7 lbs. Specify "EXPL" in addition to switch catalog number.

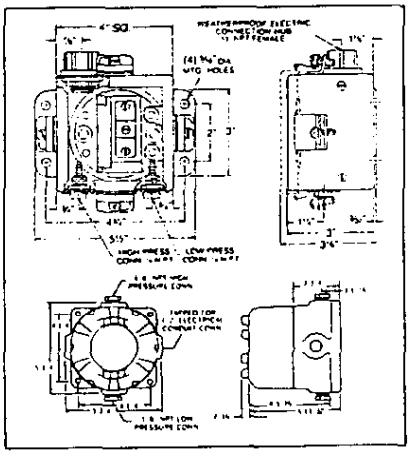

MODEL 1910 SWITCHES: OPERATING RANGES AND DEAD BANDS.

To order specify Model Number	Operating Range Inches, W.C.	Approximate Dead Band	
		At Min. Set Point	At Max. Set Point
1910-00	0.07 to 0.15	.04	.05
1910-0	0.15 to 0.5	0.10	0.15
1910-1	0.4 to 1.6	0.15	0.20
1910-5	1.4 to 5.5	0.3	0.4
1910-10	3.0 to 11.0	0.4	0.5
1910-20	4.0 to 20.0	0.4	0.6

Suggested Specification

Differential pressure switches shall be diaphragm operated with 3½" diaphragm to actuate a single pole double throw snap switch. Motion of the diaphragm shall be restrained by a calibrated spring that can be adjusted to set the exact pressure differential at which the electrical switch will be actuated. Motion of the diaphragm shall be transmitted to the switch button by means of a direct mechanical linkage. Switches shall be Dwyer Instruments, Inc. Catalog No. 1910-_____ for the required operating ranges.

How to Order: See price list, Bulletin S-26.

©Copyright 1991 Dwyer Instruments, Inc.

DWYER INSTRUMENTS, INC.
P.O. BOX 373 • MICHIGAN CITY, INDIANA 46360, U.S.A.
Telephone 219/879-8000
Fax 219/872-9057 Telex 25916

SERIES 1900 PRESSURE SWITCH
Installation and Operating Instructions

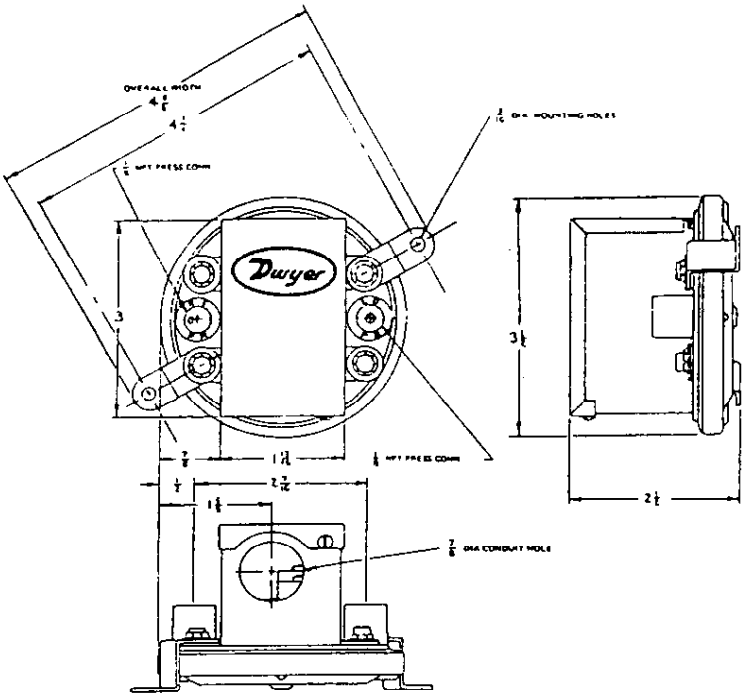

1900 SWITCH OUTLINE DIMENSIONS

INSTALLATION

1. Select a location that is free from excessive vibration, corrosive atmosphere and where the ambient temperature is within the limits for these switches.

2. Mount standard switches with the diaphragm in a vertical plane and with switch lettering and Dwyer nameplate in an upright position. Some switches are position sensitive and may not reset properly unless they are mounted with the diaphragm vertical. (Special units can be furnished for other than vertical mounting arrangements if required.)

3. Connect switch to source of pressure, vacuum or differential pressure. Metal tubing with 1/4" O.D. is recommended, but any tubing which will not restrict the air flow can be used. Connect to the two 1/8" NPT female pressure ports as noted below:

   A. Differential pressures — connect pipes or tubes from source of greater pressure to high pressure port marked HI-PR and from source of lower pressure to low pressure port marked LO-PR.

   B. Pressure only (above atmospheric) — connect tube from source of pressure to high pressure port. The low pressure port is left open to atmosphere.

   C. Vacuum only (below atmospheric pressure) — connect tube from source of vacuum to low pressure port. The high pressure port is left open to atmosphere.

4. Electrical connections to the standard single pole, double throw snap switch are provided by means of screw terminals marked "common", "norm open", and "norm closed". The normally open contacts close and the normally closed contacts open when pressure increases beyond the set point.

5. Switch loads should not exceed the maximum specified current rating of 15 amps resistive. Switch capabilities decrease with high load inductance or rapid cycle rates. Whenever an application involves either of these factors, the user may find it desirable to limit the switched current to 10 amps or less in the interest of prolonging switch life.

OPERATION

Pressure acting on the power diaphragm rotates the amplifying lever, which in turn extends the range spring and rotates the snap switch input lever. When the set point is reached, the snap switch is actuated and the electrical contacts make or break.

ADJUSTMENT

To change the set point, proceed as follows:

A. Remove the snap-on cover from the conduit enclosure by loosening its retaining screw and pulling firmly at its bottom end. Turn the slotted Adjustment Screw at the top of range spring housing clockwise to raise the set point pressure and counter-clockwise to lower the set point.

B. The recommended procedure for calibrating or checking calibration is to use a "T" assembly with three rubber tubing leads, all as short as possible and the entire assembly offering minimum flow restriction. Run one lead to the pressure switch, another to the manometer of known accuracy and appropriate range, and apply pressure through the third tube. Make final approach to the set point very slowly. Note that manometer and pressure switch will have different response times due to different internal volumes, lengths of tubing, fluid drainage, etc. Be certain the switch is checked in the position it will assume in use, i.e. with diaphragm in a vertical plane and switch lettering and Dwyer nameplate in an upright position.

C. For highly critical applications it is a good idea to check the set point adjustment and reset it as necessary once or twice in the first few months of operation. This will compensate for any change in initial tension which may occur in the spring and diaphragm. For most applications this change will not be significant and no resetting will be required.

MAINTENANCE

Moving parts of these switches are sealed in and are permanently tamper proof. The single adjustment is that of the set point. Care should be taken to keep the switch reasonably dry and free from dust or dirt. No lubrication or unusual precautions are required for normal use.

Printed in U.S.A. 9/91

26-440232-00

DWYER INSTRUMENTS, INC.
P.O. Box 373 Michigan City, Indiana 46360, U.S.A.
Phone: 219/879-8000 Telex: 25916 Fax: 219/872-9057

MONTHLY MAINTENANCE

& TROUBLESHOOTING

NEPCCO

RECOMMENDED MONTHLY MAINTENANCE CHECK LIST - AIR STRIPPERS

	DATE							
GENERAL								
1. Check operating amps of blower motor.								
2. Inspect air inlet screen, clean if required.								
3. Record magnehelic gauge reading for reference.								
4. Collect influent and effluent samples.								
5. If magnehelic gauge reading is high or effluent samples are hot, disassemble and clean trays or clean/ replace packing as applicable. Also check mist eliminator for fouling.								
MAINTENANCE COMPLETED BY:								

DATE	COMMENTS

FAILURE TO PERFORM RECOMMENDED MONTHLY MAINTENANCE MAY RESULT IN PREMATURE EQUIPMENT FAILURE AND VOID APPLICABLE WARRANTIES.

NEPCCO

RECOMMENDED MONTHLY MAINTENANCE CHECK LIST - PUMPS

	DATE							
ELECTRIC SUBMERSIBLE								
1. Check operating amps of pump motor								
2. Inspect probe. Clean if required.								
PNEUMATIC SUBMERSIBLE								
1. Check effluent from pump for excessive air discharge. If so, adjust timer as required.								
2. Inspect tubing.								
3. Check particulate filter.								
4. Check membrane dryer for debris.								
TRANSFER PUMPS								
1. Check motor coupling. Tighten if necessary.								
2. Check operating amps of transfer pump motor.								
3. Inspect shaft seal for leakage (if applicable).								
MAINTENANCE COMPLETED BY:								

DATE	COMMENTS

FAILURE TO PERFORM RECOMMENDED MONTHLY MAINTENANCE MAY RESULT IN PREMATURE EQUIPMENT FAILURE AND VOID APPLICABLE WARRANTIES.

NEPCCO

RECOMMENDED MONTHLY MAINTENANCE CHECK LIST - MISCELLANEOUS

DATE								
FILTERS - Check pressure gauges before and after bag filters. (NEPCCO recommends 30 psi maximum pressure differential)								
CARBON -								
1. Test for effluent break through.								
2. Check differential pressure.								
3. Touch up paint on any exposed metal to prevent rust.								
4. Collect influent and effluent samples.								
MAINTENANCE COMPLETED BY:								

DATE	COMMENTS

FAILURE TO PERFORM RECOMMENDED MONTHLY MAINTENANCE MAY RESULT IN PREMATURE EQUIPMENT FAILURE AND VOID APPLICABLE WARRANTIES.

NEPCCO

RECOMMENDED MONTHLY MAINTENANCE CHECK LIST - SYSTEM

	DATE							
1. Collect influent and effluent samples.								
2. Insure no leaks in system piping.								
3. Inspect system instrumentation for damage.								
4. Check site condition (pick up trash, etc.).								
5. Inspect fence/building for damage.								
MAINTENANCE COMPLETED BY:								

DATE	COMMENTS

FAILURE TO PERFORM RECOMMENDED MONTHLY MAINTENANCE MAY RESULT IN PREMATURE EQUIPMENT FAILURE AND VOID APPLICABLE WARRANTIES.

TROUBLESHOOTING GUIDE

NEPCCO strives to manufacture low maintenance, trouble free remediation systems, however an occasional problem may arise. The following guideline has been developed to aid the technician in troubleshooting the system in the field.

Should you require further assistance, please call NEPCCO's Field Service number @ 1-800-277-3279. In order to provide fast efficient technical assistance, **PLEASE REFER TO NEPCCO'S 6 DIGIT EASYPURGE™ SYSTEM NUMBER IN ALL CORRESPONDENCE**. This number is easily located on the system manual cover, on all engineering drawings, inside all control panels and is permanently stamped on the skid deck near the control panel stanchion. Not providing the system number may cause a delay in obtaining technical assistance.

CAUTION

SOME TROUBLESHOOTING PROCEDURES MAY INVOLVE MEASURING AC VOLTAGES. AC VOLTAGE MEASUREMENTS, ELECTRICAL MAINTENANCE AND REPAIRS SHOULD BE PERFORMED BY QUALIFIED SERVICE PERSONNEL

SYMPTOM	POSSIBLE CAUSES	CORRECTIVE ACTION
RECOVERY WELL PUMP WILL NOT OPERATE	Probe placed incorrectly in well	Verify that the probe is placed at the correct depth in the well
	Bad pump motor	If pump does not operate in the manual position and the control panel delivers 240 VAC to the pump motor, replace the pump motor
	Internal or external thermal overloads	Reset thermal overload. Check the recovery well pump for proper depth Check pump inlet for any debris blockage Ensure that the pump shaft rotates freely Ensure that excessive cycling does not occur
	Bad probe	Perform continuity test as per the HydroPurge™ or PetroPurge™ section of the manual
	Bad logic card	If the pump runs when the control panel switch is in the manual position and not in the "AUTO" position, and all of the above checks have been performed to verify that the probe is good, swap or replace the logic card. Ensure the logic card is plugged in correctly.
	Control panel switches in "OFF" position	Place switches to the "AUTO" position
	Circuit breaker tripped or in "OFF" position	Reset breaker or place in the "ON" position
	Incorrect wiring	Verify that pump motor is wired correctly as per system manual
	Control panel power supply	Verify that the 5VDC power supply is operational "RED LED ON"

SYMPTOM	POSSIBLE CAUSES	CORRECTIVE ACTION
NO POWER TO SYSTEM	Main service disconnect tripped	Reset breaker
	System circuit breaker tripped or in the "OFF" position	Reset breaker
BLOWER DOES NOT DELIVER CORRECT CFM	Motor running backwards	Verify that blower motor is wired correctly
	Blower blade binding	With all power off determine cause of binding
	Damper not adjusted correctly	Loosen set screw and adjust damper as necessary
	Debris blocking inlet screen	Remove any debris that may have collected at inlet screen
BLOWER WILL NOT RUN	Starter switch in "OFF" position	Place switch to "ON" or "START"
	Blower circuit breaker tripped or in "OFF" position if so equipped	Reset breaker or place to "ON" position
	Blower motor starter thermal overload tripped	Reset thermal overload
TRANSFER PUMP WILL NOT OPERATE	System failsafe, if so equipped	Corrective action for recovery well pump also applies to transfer pumps with the exception that transfer pumps operate with a multi-level probe. Please refer to the Pump & Controller section of the system manual for multi-level probe test procedures.
	Bad multi-level probe	

SYMPTOM	POSSIBLE CAUSES	CORRECTIVE ACTION
RECOVERY WELL PUMP CYCLES INCORRECTLY	Probe connected incorrectly	Refer to manual and verify probe connections
	Probe placed incorrectly	Refer to manual and verify correct probe placement
	Logic card inoperative	Replace logic card
TRANSFER PUMP CYCLES INCORRECTLY	Multi-level probe operating incorrectly	The above procedure applies to transfer pumps with the exception that transfer pumps operate with a multi-level probe
CONTROL PANEL INOPERATIVE	No AC power	Verify AC power at TB-1
	Power supply inoperative	Verify that 5VDC power supply is operational, "RED LED ON". Check fuses and replace as necessary
FAILSAFE PANEL WILL NOT RESET	Failsafe condition not corrected	All failsafe sensors are wired normally open and the failed condition is closed. Verify that the failsafe condition has been corrected
BLOWER FAILSAFE WILL NOT RESET	Air line to pressure switch blocked	Clear lines or tubing of water or debris from sump to pressure switch.
	Blower not running	Verify that the blower is running
	Blower damper closed	Open and adjust blower damper
LEVEL SENSORS WILL NOT WORK	Level sensor floats inoperative	Ensure that the floats operate freely Ensure that all Hi-Hi level sensors are in the DOWN N. O. position and all Lo-Lo sensors are in the UP N.O. position

SYMPTOM	POSSIBLE CAUSES	CORRECTIVE ACTION
AIR COMPRESSOR INOPERATIVE	No AC power	Verify AC power at motor starter Verify AC power at motor weather head
	Low oil level	Check oil level and fill

CAST HIGH PIT PUMP

AP12, AP35, AP50

(GB) Installation and Operating Instructions
(D) Montage- und Betriebsanleitung
(F) Notice d'installation et d'entretien
(I) Istruzioni di installazione e funzionamento
(E) Instrucciones de instalación y funcionamiento
(P) Instruções de instalação e funcionamento
(GR) Οδηγίες εγκατάστασης και λειτουργίας
(NL) Installatie- en bedieningsinstructies
(S) Monterings- och driftsinstruktion
(SF) Asennus- ja käyttöohjeet
(DK) Monterings- og driftsinstruktion

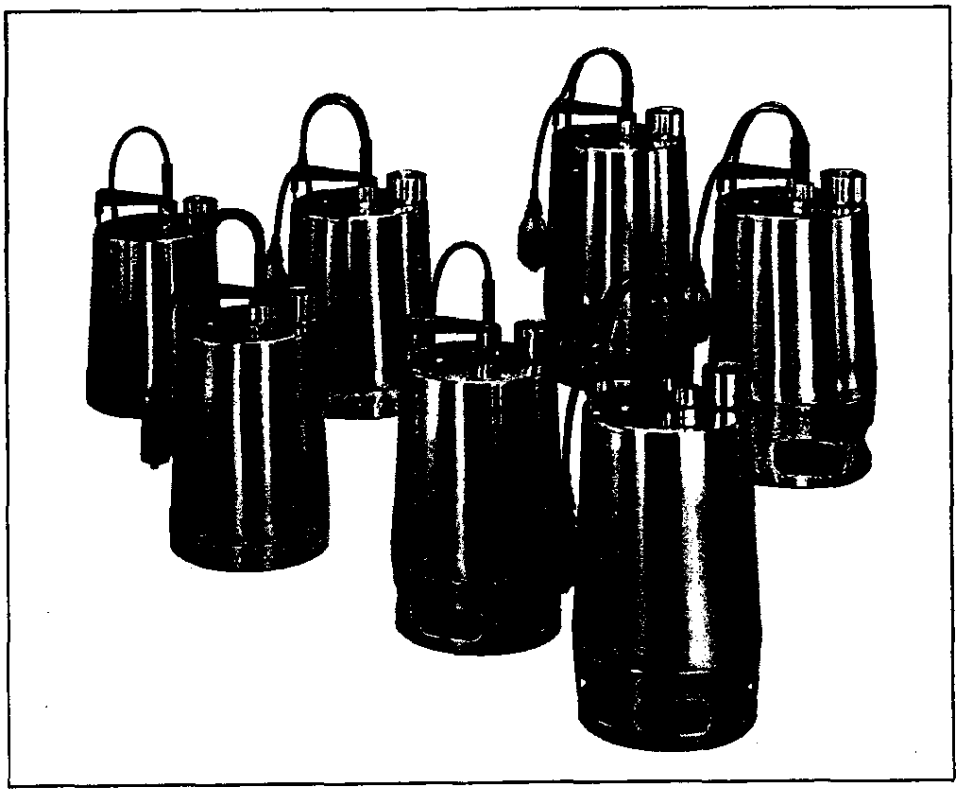

GRUNDFOS®

GB

CONTENTS

		Page
1.	**General Description**	4
1.1	Applications	4
1.2	Storage and Operating Conditions	4
1.3	Sound Pressure Level	4
2.	**Safety**	5
3.	**Electrical Connection**	5
3.1	Checking of Direction of Rotation	5
4.	**Installation**	5
4.1	Connection	5
4.2	Pump Location	5
4.3	Setting of Level Switch	6
5.	**Start-Up**	6
6.	**Maintenance and Service**	6
6.1	Pump Construction	6
7.	**Fault Finding Chart**	7

Before beginning installation procedures, these Installation and Operating Instructions should be studied carefully. The installation and operation should also be in accordance with local regulations and accepted codes of good practice.

1. General Description

Fig. 1

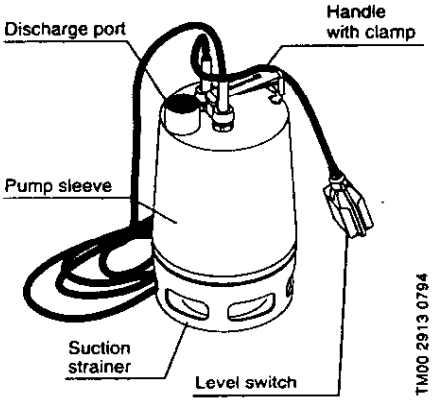

1.1 Applications

The GRUNDFOS AP pump is a single-stage submersible pump designed for the pumping of waste water.

The pump is capable of pumping water which contains a limited quantity of solids, however not stones and similar materials, without being blocked or damaged.

The pump is available for automatic as well as manual operation and can be installed in a permanent installation or used as a portable pump.

The pump is suitable for:

Applications	AP12	AP35	AP50
Groundwater lowering	●	●	●
Pumping in drainage pits	●	●	●
Pumping in surface water pits with inflow from roof gutters, shafts, tunnels, etc.	●	●	●
Emptying of ponds, tanks, etc.	●	●	●
Pumping of fibre-containing waste water from laundries and industries		●	●
Pumping of domestic waste water from septic tanks and sludge treating systems		●	●
Pumping of domestic waste water without discharge from water closets		●	●
Pumping of domestic waste water with discharge from water closets			●
Maximum particle size [mm]	12	35	50

The pump must not be used in or at swimming pools, garden ponds, etc. when there are persons in the water.

Incorrect application of the pump (e.g. resulting in blocking of the pump) and wear are not covered by the warranty.

1.2 Storage and Operating Conditions

Storage Temperature:	Down to –30°C.
Minimum Liquid Temperature:	0°C.
Maximum Liquid Temperature:	+55°C continuously. Up to +70°C for periods not exceeding 3 minutes. Then the pump must cool down.
Installation Depth:	Maximum 10 metres below liquid level.
pH Value:	Between 4 and 10.
Density:	Maximum 1100 kg/m³.
Viscosity:	Maximum 10 mm²/s.
Technical Data:	See pump nameplate.

1.3 Sound Pressure Level

The sound pressure level of the pump is lower than the limiting values stated in the EC Council Directive 89/392/EEC relating to machinery.

2. Safety

Pump installation in wells must be carried out by specially trained persons.

3. Electrical Connection

Note: Depending on local regulations, a pump with 10 metres of mains cable must be used if the pump is used as a portable pump for different applications.

The electrical connection should be carried out in accordance with local regulations.

The pump must be connected to an external mains switch. If the pump is not installed close to the switch, this must be of a lockable type.

The operating voltage and frequency are marked on the pump nameplate. Please make sure that the motor is suitable for the electricity supply on which it will be used.

As a precaution, the pump must be connected to a socket with earth connection. The permanent installation must be fitted with an earth leakage circuit breaker (ELCB) with a tripping current < 30 mA.

Three-phase pumps must be connected to an external motor starter with differential release and with a minimum contact gap of 3 mm. The set nominal current of the motor starter must correspond to the electrical data marked on the pump nameplate.

If a level switch is connected to a three-phase pump, the motor starter must be magnetically operated.

Single-phase pumps incorporate thermal overload protection and require no additional motor protection.

Note: If the motor is overloaded, it will stop automatically. When it has cooled to normal temperature, it will restart automatically.

3.1 Checking of Direction of Rotation

(Three-Phase Pumps only)

The direction of rotation should be checked every *time the pump is connected to a new installation.*

Check the direction of rotation as follows:

1. Position the pump so that the impeller can be observed.
2. Start the pump for a short period.
3. Observe the rotation of the impeller. The correct direction of rotation is indicated by an arrow on the suction strainer (clockwise when seen from the bottom). If the impeller rotates in the wrong direction, reverse the direction of rotation by interchanging two of the phases to the motor.

If the pump is connected to a piping system, the direction of rotation can be checked as follows:

1. Start the pump and check the quantity of water or *the discharge pressure.*
2. Stop the pump and interchange two of the phases to the motor.
3. Start the pump and check the quantity of water or the discharge pressure.
4. Stop the pump.

Compare the results taken under points 1 and 3. The connection which gives the larger quantity of water or the higher pressure is the correct direction of rotation.

GB

4. Installation

The installation of the pump must be carried out by specially trained persons.
AP35 and AP50: Care must be taken to ensure that persons cannot come into contact with the pump impeller.

4.1 Connection

For permanent installation, it is recommended to fit a union, a non-return valve and an isolating valve in the discharge pipe.

If the pump is installed in a pit with a minimum free cable length of 100 mm, see fig. 6, the minimum pit dimensions must be as shown in fig. 2.

Furthermore, the pit should be dimensioned according to the relation between the water flow to the pit and the pump capacity.

Fig. 2

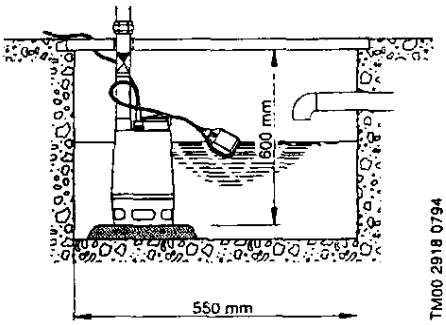

4.2 Pump Location

The pump can be used in vertical or horizontal position with the discharge port as the highest point of the pump, see fig. 3.

During operation, the suction strainer must always be completely covered by the pumped liquid.

Fig. 3

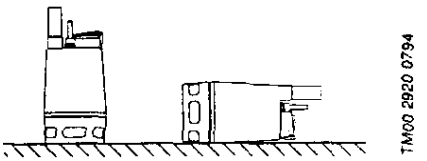

When the pipe/hose has been connected, place the *pump in its operating position.*

Do not lift the pump by means of the electric cable.

Position the pump so that the suction strainer will not be blocked or partly blocked by sludge, mud or similar materials.

In the case of permanent installation, the pit must be cleared of sludge, pebbles, etc. before the pump is installed.

GB

It is recommended to place the pump on a solid base, see fig. 4.

The pump must not be installed hanging from the discharge pipe.

Fig. 4

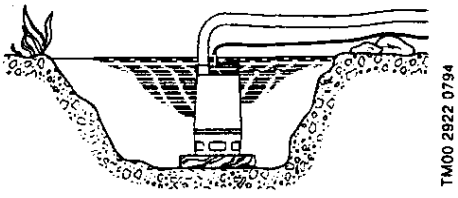

4.3 Setting of Level Switch

For pumps supplied with a level switch, the difference in level between start and stop can be set by adjusting the free cable between the level switch and the pump handle.

The longer the length of free cable, the larger the difference in level between start and stop.

Maximum length of free cable: 350 mm, see fig. 5.

Minimum length of free cable: 100 mm, see fig. 6.

The stop level must be above the suction strainer to prevent the pump from taking in air.

Fig. 5

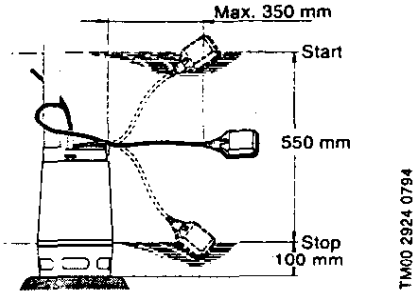

Fig. 6

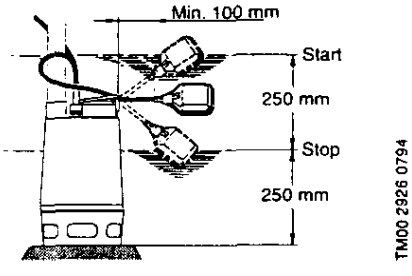

5. Start-Up

Before starting the pump, check that the suction strainer is fitted to the pump and submerged in the pumped liquid.

Open the isolating valve, if fitted, and check the level switch setting.

Note: The pump may be run briefly to check the direction of rotation without being submerged in the pumped liquid.

6. Maintenance and Service

Before starting work on the pump, make sure that the electricity supply to the pump has been switched off and that it cannot be accidentally switched on.

Before carrying out maintenance and service, it must be ensured that the pump has been thoroughly flushed with clean water. Rinse the pump parts in water after dismantling.

Check the pump and replace the oil once a year. If the pump is used for pumping liquids containing abrasive particles or it is operating continuously, the pump must be checked at shorter intervals.

Out of consideration for the personal safety and health, this work must be carried out by specially trained persons. Furthermore, all rules and regulations covering safety, health and environment must be observed.
During dismantling, caution should be exercised as there will be access to sharp edges, etc. which may cut.

The pump contains approx. 60 ml non-poisonous oil.

Used oil must be disposed of in accordance with local regulations.

If the drained oil contains water or other impurities, the shaft seal should be replaced.

6.1 Pump Construction

The construction of the pump will appear from the table below and figs. A, B and C at the end of these instructions.

Pos.	Description
6	Pump housing
37a	O-ring
49	Impeller
55	Pump sleeve with motor
66	Washer
66b	Lock washer
67	Lock nut
67a	Protective cap
84	Suction strainer
105	Shaft seal
182	Level switch
188a	Screws
193	Screws

7. Fault Finding Chart

Fault	Cause	Remedy
1. Motor does not start.	a) No electricity supply.	Connect the electricity supply.
	b) Motor switched off by level switch.	Adjust/replace the level switch.
	c) Fuses are blown.	Replace fuses.
	d) Motor protection/thermal relay has tripped out.	Wait until the motor protection trips in again/reset the relay.
	e) Impeller blocked by impurities.	Clean the impeller.
	f) Short-circuit in cable or motor.	Replace the defective part.
2. Motor protection/ thermal relay trips out after short time of operation.	a) Temperature of pumped liquid too high.	Use another pump type.
	b) Impeller blocked or partly blocked by impurities.	Clean the pump.
	c) Phase failure.	Call an electrician.
	d) Voltage too low.	Call an electrician.
	e) Overload setting of the motor starter too low.	Adjust the setting.
	f) Incorrect direction of rotation. See section *3.1 Checking of Direction of Rotation.*	Reverse the direction of rotation.
3. Pump runs constantly or gives insufficient water.	a) Pump partly blocked by impurities.	Clean the pump.
	b) Discharge pipe or valve partly blocked by impurities.	Clean the discharge pipe.
	c) Impeller not properly fixed to the shaft.	Tighten the impeller.
	d) Incorrect direction of rotation. See section *3.1 Checking of Direction of Rotation.*	Reverse the direction of rotation.
	e) Incorrect setting of level switch.	Adjust the level switch.
	f) Pump too small for the application.	Replace the pump.
	g) Impeller worn.	Replace the impeller.
4. Pump runs but gives no water.	a) Pump blocked by impurities.	Clean the pump.
	b) Discharge pipe or non-return valve blocked by impurities.	Clean the discharge pipe.
	c) Impeller not properly fixed to the shaft.	Tighten the impeller.
	d) Air in pump.	Vent the pump and the discharge pipe.
	e) Liquid level too low. The suction strainer is not completely submerged in the pumped liquid.	Submerge the pump in the liquid or adjust the level switch.
	f) Level switch does not move freely.	Make the level switch move freely.

GB

Subject to alterations.

COPY

"KP" Sump and Utility Pumps
Models KP150 · KP250 · KP350

Installation and Operating Instructions

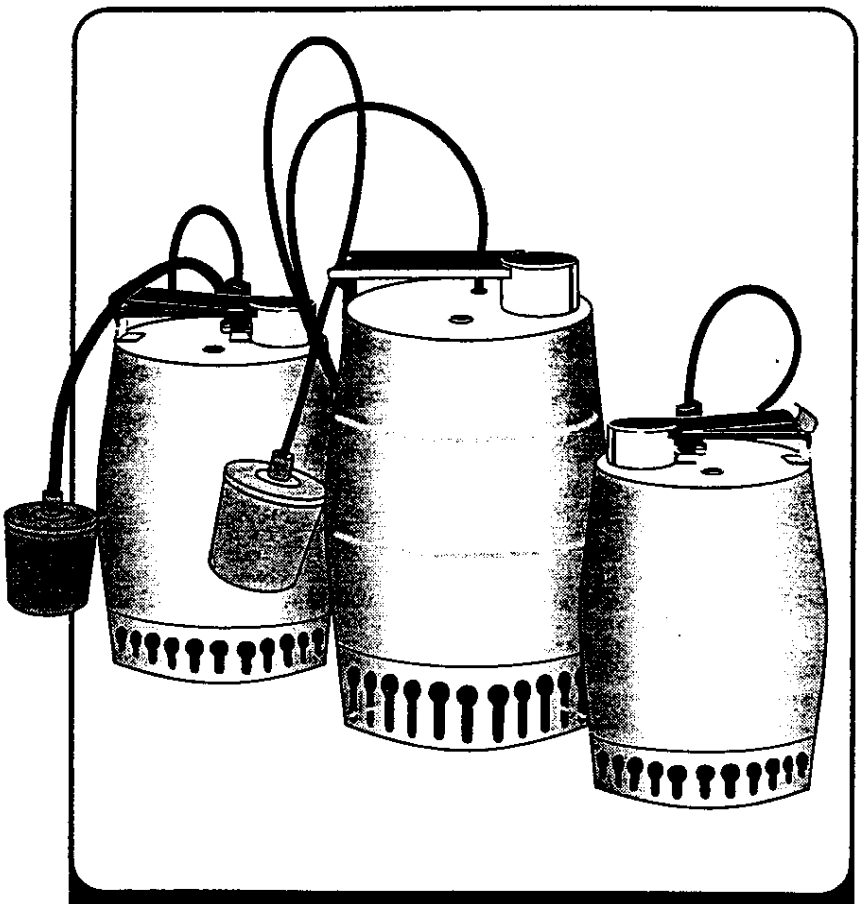

Please leave these instructions with the owner for future reference

GRUNDFOS

"Leaders in Pump Technology"

Safety Warning

WARNING:
Risk of electric shock — This pump has not been investigated for use in swimming pool areas.
The safe operation of this pump requires that it be grounded in accordance with National Electric Code and local governing codes and regulations.

Technical Specifications

Motor Protection:	Built-in thermal overload protection
Discharge Port:	1 1/4" NPT
Noise Level:	Less than 65 dB(A), measured in accordance with ISO 3743.
Installation Depth:	Min: Water level above strainer inlet Max: 33 feet below liquid level
Storage Temperature:	Min -5°F

Pre-Installation Checklist

1. Check the Condition of the Pump

Examine the pump carefully to make sure no damage has occurred during shipment. "The KP" pump should remain in its shipping carton until it is ready to be installed. This carton is especially designed to protect it from damage. During unpacking and prior to installation, care should be taken to ensure the pump is not dropped or mishandled.

2. Electrical Requirements

The operating voltage and other electrical data are marked on the motor label. Make sure that the motor is suitable for the electrical supply on which it will be used. All electrical cords must be of an adequate size to prevent any drop in the supply voltage. All "KP" models have built-in thermal overload motor protection which resets automatically. "KP" models are supplied complete with a power cord. When fitted, the automatic float switch is connected between the pump power cord and the power supply.
Wiring of the pump should be in accordance with NEC regulations for permanent or temporary installations, whichever is applicable.

3. Pumped Liquid Requirements

The operating limits of "The KP" pumps include:

Liquid Temperature:	**Min**	**Max**
KP 150 & 250	32°F	122°F
KP 350 32°F	95°F	

At intervals of at least 30 minutes, a liquid temperature of up to 158°F is allowed for short periods (2 minutes).

Pre-Installation Checklist

4. Is the Application Correct for This Pump ?

SUITABLE APPLICATIONS

"The KP" pumps are single-stage submersible pumps suitable for pumping waste water. The pump is capable of pumping water which contains solids up to 3/8" in diameter. The pump is suitable for:

- Drainage of cellars or buildings prone to flooding.
- Pumping of waste water from washing machines, sinks, baths, showers, etc., up to the sewer level.
- Dewatering of sites or excavations or the pumping of water for fountains.
- Pumping in draining wells
- Emptying swimming pools, ponds, tanks, or fountains (***except when there are persons in the water).***

UNSUITABLE APPLICATIONS

The pump ***IS NOT*** suitable for pumping:

- Sewage
- Liquids containing long fibers
- Liquids containing solid particles larger than 3/8" in diameter.
- Flammable liquids (oil, gasoline, etc.)
- Aggressive liquids

Note: If the pump has been used for very dirty or chlorinated water it should be flushed thoroughly with clean water after use.

5. Read this Guide Thoroughly

Even if you are very familiar with the installation of this pump, a quick glance through the remaining sections of this guide may help you avoid a potential problem.

Installation and Operation

Handling the Pump

It is recommended that a cable be secured to the pump handle to make it easier to remove the pump.

Do not lower or lift the pump by means of the electric cord.

Electrical Connection

The electrical connection should be carried out in accordance with local regulations and following the National Electrical Code. The pump should be grounded. The operating voltage and frequency are marked on the nameplate.

"THE KP" pumps have built-in thermal overload protection and require no additional motor protection. If the motor is overloaded, it will stop automatically. When it has cooled to normal temperature it will start automatically.

Installation and Operation

When connecting the pump for manual operation, the 115v plug is inserted into a 115v outlet. If a floatswitch is included for automatic operation it will be of the "Piggy-back" design. Plug the 115v plug on the floatswitch into the 115v outlet then plug the 115v plug from the pump into the floatswitch plug.

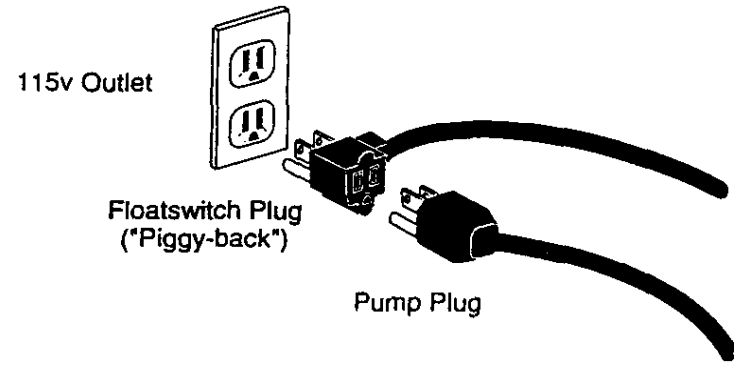

Pump Location and Positioning

Before positioning the pump, make sure that the strainer will not be blocked or partly blocked by silt, mud, or similar materials. This can be avoided by positioning the pump on bricks or a concrete pad, or by letting the pump hang from the discharge pipe or a cable 2-4 inches above the bottom.

"The KP" can be used in the following positions:

When used in the horizontal position, the pump must be completely covered by liquid.

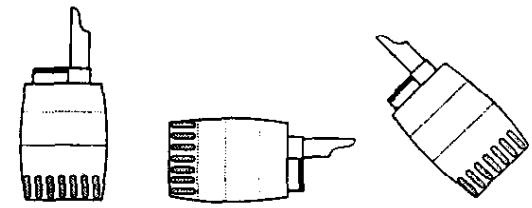

Pipe Connection

Steel or rigid plastic pipe can be screwed directly into the 1 1/4" inch NPT pump discharge port. For permanent installation, a union fitting at a convenient point is recommended to facilitate ease of removal for cleaning and servicing. A few other recommendations:

- For portable or temporary installations, plastic discharge pipe can be used in conjunction with a suitable screwed/hose connector.
- Removal of the pump should be by a cable secured to the pump handle and not by the discharge pipework.
- Screwed threads should be sealed using Teflon® tape.

Installation and Operation

Non-Return Check Valve Recommended

Whenever the pump is installed in a permanent installation with a float switch, a non-return check valve must be fitted in the discharge pipe or hose.

Adjusting the Float Switch

The float switch can automatically turn the pump on and off. Switching *adjustment is possible* by repositioning the float switch in the handle of the pump. The free cable length must always be:

Models 150 & 250
- At least 2 inches
- No more than 8 inches

Model 350
- At least 2 1/2 inches
- No more than 6 inches

For manual operation, unplug both the pump and floatswitch from the115v outlet. Plug the 115v plug on the pump *into the outlet.*

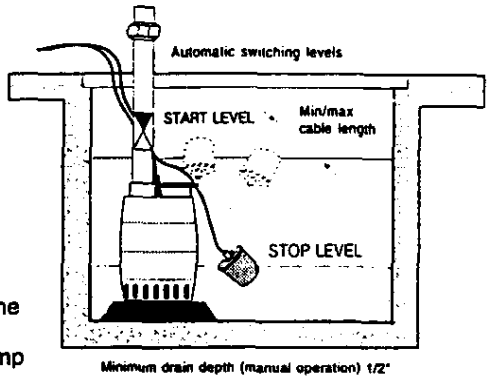

Minimum drain depth (manual operation) 1/2"

Basin Requirements

When the pump is installed in a permanent installation with a float switch, and *the cable length is set to the minimum length as listed above,* the minimum dimensions of the well should be as shown below. Furthermore, the well should be dimensioned according to the relation between the water flow to the well and the pump capacity.

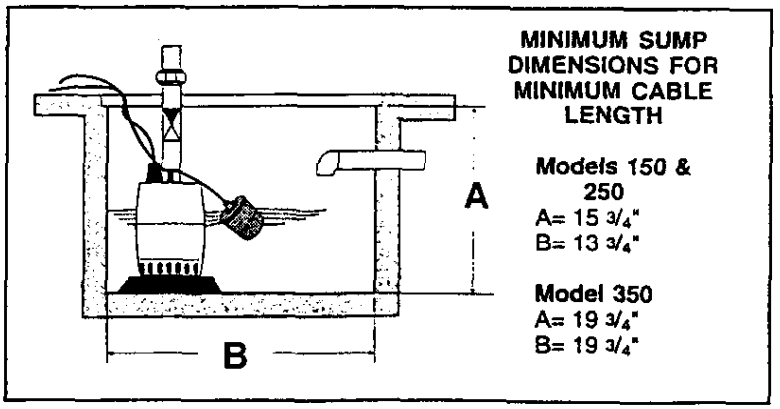

Installation and Operation

Starting "The KP"

Before starting the pump, check:

- Whether the pump is submerged in liquid. During normal operation, the strainer of the pump must be below the surface of the liquid.
- Whether the pump is positioned on a base so that the strainer is not blocked by silt, mud or similar materials.
- Whether the pipe/hose connection is tight.
- Whether the discharge pipe is open (bend of hose, etc).
- Whether the pump is connected to the electric supply in accordance with the instructions.
- Check the float switch for free movement.

Then:

7. Switch on and check to make sure the pump operates properly, that water is being pumped, and the pump operates through the control sequence.
8. The float switch will allow the pump to pump down to a level of approximately 4". To pump out below this level secure the switch in the manual position. See Adjusting the Float Switch.

Maintenance

Regular Maintenance

Under normal operating conditions, **"The KP" is maintenance free.** It is always advisable to flush the pump after each use, particularly if it has been pumping liquids containing particles that may settle in the pump.

Cleaning the Pump

If the pump does not deliver a sufficient quantity of water because of sediment, dismantle and clean the pump. To dismantle the pump:

1. Disconnect the electrical supply. Allow the pump to drain.
2. **Models 150 & 250** — *(Refer to Fig.1 Pg.6)* Carefully loosen the suction strainer by inserting a screwdriver in the recess between the outer casing and the strainer and pressing it hard. Repeat until the strainer is free and can be removed.
   Model 350 — *(Refer to Fig.2 Pg.7)* Carefully loosen the strainer by inserting a screwdriver through one of the holes of the strainer and press it downwards (towards bottom). Repeat the procedure until the strainer is free and can be removed.
3. Remove the suction strainer, clean, and refit it. Connect the electricity supply and start the pump.

If the pump still doesn't deliver sufficient water, then:

4. Disconnect the electricity supply.
5. **Models 150 & 250** — *(Refer to Fig.1 Pg.6)* Turn the pump housing 90° counter-clockwise using a screwdriver. Pull off the housing. Clean and flush the pump with water to remove possible impurities between the motor and the outer casing. Clean the impeller by spraying it with a hose. Check to make sure the impeller can rotate freely. If not:
   a. Hold the impeller in place with a screwdriver while slackening and removing the nut on the motor shaft (13mm).
   b. Clean the impeller and around the shaft.

Maintenance

Check the impeller, the housing, and the sealing part. Assemble the pump in reverse order of dismantling. When doing so, check to make sure the sealing part of the housing is positioned correctly. Moisten the sealing part with water to facilitate the fitting.

6. **Model 350** — (*Refer to Fig.2*) Unscrew the three screws close to the edge of the discharge chamber and lift the pump out of the intermediate chamber. Clean the intermediate chamber, the pump, and the impeller. Check to make sure the impeller can rotate freely. If not:
   a. Hold the impeller in place with a screwdriver while slackening and removing the nut on the motor shaft (13mm).
   b. Clean the impeller and around the shaft.
   Check the impeller and around the shaft. If the impeller is worn or defective, install a new one. Assemble the pump in reverse order of dismantling. Do so by:
   c. Fit the impeller with the washer and nut. Make sure the impeller engages with the shaft.
   d. Position the O-ring on the intermediate chamber and lower the pump into the intermediate chamber.
   e. Fit the three screws with gaskets in the discharge chamber and tighten securely.

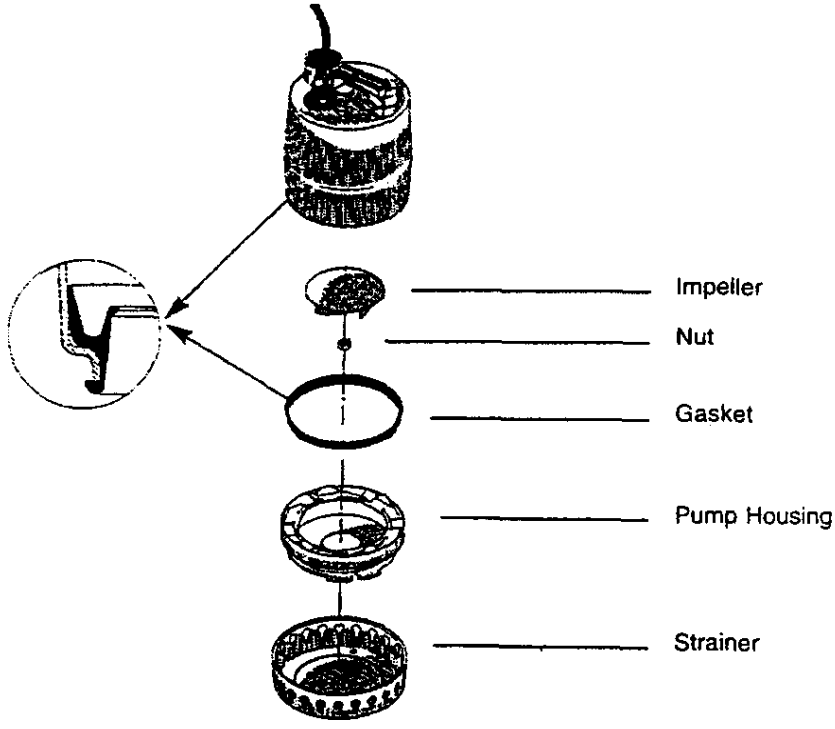

Fig. 1 KP 150 & 250

Maintenance

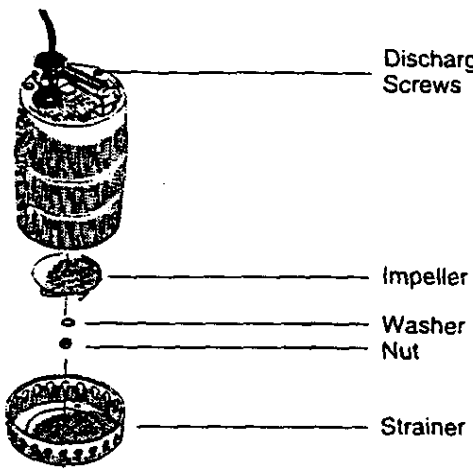

Fig. 2 KP 350

Troubleshooting

Problem	*Cause*
1. Motor does not start	a) Supply failure. b) Pump switched off by float switch c) Fuses are blown. d) Thermal relay has cut out the electricity supply to the motor (see Electrical Connection — pg.2).
2. Thermal relay trips out after short time of operation.	a) Temperature of pumped liquid higher than stated under "Pumped Liquid Requirements" on pg. 1. b) Pump partly blocked by particles (see "Cleaning the Pumps" — pg.5). c) Pump mechanically locked (see "Cleaning the Pumps" — pg.5).
3. Pump runs but gives insufficient water.	a) Strainer partly blocked by particles. b) Pump partly blocked by particles (see "Cleaning the Pumps"). c) Discharge pipe partly blocked. Check the check valve, if fitted. d) Check the wear plate and the impeller for wear (see "Cleaning the Pumps").
4. Pump runs but gives no water.	a) Strainer blocked by particles. b) Pump partly blocked by particles (see "Operation and Maintenance"). c) Discharge pipe partly blocked. Check the check valve, if fitted. d) Liquid level is too low. During starting, the liquid level must be above the strainer. e) The float switch cable length is set too long

Notes

LIMITED WARRANTY

Products manufactured by GRUNDFOS PUMPS CORPORATION (GRUNDFOS) are warranted to the original user only to be free of defects in material and workmanship for a period of 18 months from date of installation, but not more than 24 months from date of manufacture. GRUNDFOS' liability under this warranty shall be limited to repairing or replacing at GRUNDFOS' option, without charge, F.O.B. GRUNDFOS' factory or authorized service station, any product of GRUNDFOS manufacture. GRUNDFOS will not be liable for any costs of removal, installation, transportation, or any other charges which may arise in connection with a warranty claim. Products which are sold but not manufactured by GRUNDFOS are subject to the warranty provided by the manufacturer of said products and not by GRUNDFOS' warranty. GRUNDFOS will not be liable for damage or wear to products caused by abnormal operating conditions, accident, abuse, misuse, unauthorized alteration or repair, or if the product was not installed in accordance with GRUNDFOS' printed installation and operating instructions.

To obtain service under this warranty, the defective product must be returned to the distributor or dealer of GRUNDFOS products from which it was purchased together with proof of purchase and installation date, failure date, and supporting installation data. Unless otherwise provided, the distributor or dealer will contact GRUNDFOS or an authorized service station for instructions. Any defective product to be returned to GRUNDFOS or a service station must be sent freight prepaid; documentation supporting the warranty claim and/or a Return Material Authorization must be included if so instructed.

GRUNDFOS WILL NOT BE LIABLE FOR ANY INCIDENTAL OR CONSEQUENTIAL DAMAGES, LOSSES, OR EXPENSES ARISING FROM INSTALLATION, USE, OR ANY OTHER CAUSES. THERE ARE NO EXPRESS OR IMPLIED WARRANTIES, INCLUDING MERCHANTABILITY OR FITNESS FOR A PARTICULAR PURPOSE, WHICH EXTEND BEYOND THOSE WARRANTIES DESCRIBED OR REFERRED TO ABOVE.

Some jurisdictions do not allow the exclusion or limitation of incidental or consequential damages and some jurisdictions do not allow limitations on how long implied warranties may last. Therefore, the above limitations or exclusions may not apply to you. This warranty gives you specific legal rights and you may also have other rights which vary from jurisdiction to jurisdiction.

GRUNDFOS®

"Leaders in Pump Technology"

Grundfos Pumps Corporation • 2555 Clovis Avenue • Clovis, CA 93612
Regional Centers: Allentown, PA • Atlanta, GA • Chicago, IL • Clovis, CA • Seattle, WA • Dallas, TX
Phone: (800) 333-1366 • Fax: (800) 333-1363
Canada: Mississauga, Ontario • Mexico: Apodaca, N.L.

01 07 32

V7 09 05 53 11 94	US
LKP-TL-001	10/94

Part No.: 13273-000-1
Bulletin Q-701

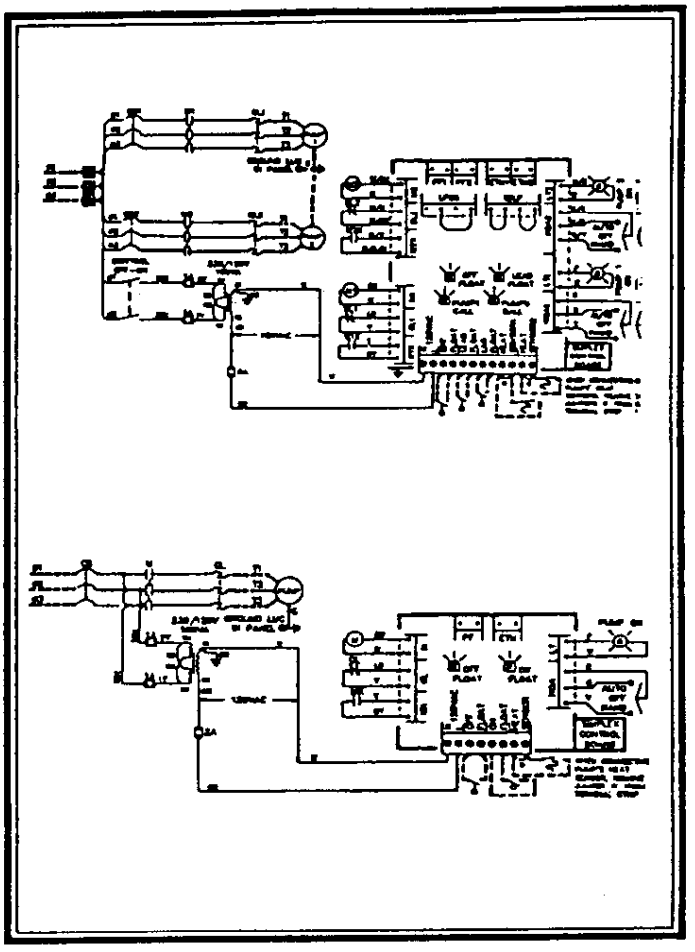

Installation and Service Manual

STANDARD ELECTRICAL "Q" PANELS

AURORA/HYDROMATIC Pumps, Inc.

WARNING: Before handling these pumps and controls, always disconnect the power first.

Do not smoke or use sparkable electrical devices or flames in a septic (gaseous) or possible septic sump.

PANEL PREPARATION: Prior to installing the control panel, tighten all screws and nuts. Make sure that all electrical connections are secure.

CONTENTS

	Page
Installation Instructions	2
Maintenance	3
Parts List	3
Trouble Check List	3-5

INSTALLATION INSTRUCTION

ELECTRICAL CONNECTIONS

The contractor must conform to the latest requirements of the National Electrical Code. All conduit and cables shall be in accordance with NEC code NFPA#70. To maintain UL and CSA ENCL rating, use same type UL and CSA weatherproof conduit hubs when connecting to this enclosure. Prior to conducting any installation, repair or service with regard to the control panel, refer to the schematic appropriate for that panel. The schematic will provide guidance with regard to the terminal block connections.

"CAUTION" - "Nonmetallic enclosure does not provide grounding conduit connections. Use grounding bushing and jumper wires."

Make the Following Electrical Connections:

a. Connect the pump heat sensor and seal failure leads (if available on the pump) to the appropriate terminall blocks in the control panel. *If the heat sensor lead from the pump is wired as indicated, remove jumpers* as defined by the schematic.
b. Connect all the float control leads to the appropriate panel terminal blocks. Contractor must be very careful in locating the floats at the proper elevations. The maximum distance from the control panel and the floats is the lesser of 100 feet, or the maximum distance recommended for the pump.
c. Connect the pump leads to the control panel. When connecting the pump leads it is very critical that the proper sequence be maintained. On single phase pumps, connect the color coded pump leads to the appropriate terminals as directed by the control schematic.
d. BEFORE CONNECTING POWER TO THE CONTROL PANEL, MAKE SURE ALL CONTROL SWITCHES (e.g. H-O-A SWITCH) AND PROTECTIVE DEVICES (e.g. BREAKERS) ARE IN THE OFF POSITION. NOW CONNECT POWER TO THE TERMINAL BLOCK OR THE CIRCUIT BREAKER AS DIRECTED BY THE SCHEMATIC.
e. CONTROL PANEL MUST BE GROUNDED PROPERLY PER NEC AND/OR LOCAL CODES. TO FACILITATE THIS, A GROUND LUG IS PROVIDED ON THE CONTROL PANEL.

START UP CHECK LIST

WARNING: Before handling these pumps and controls, always disconnect power first. Do not smoke or use sparkable electrical devices or flames in a septic (gaseous) or possible septic sump.

Check List:

1. Check junction box for moisture. Moisture may cause chattering of relays/contactors.
2. Check wiring of capacitor pack for single phase applications
3. Energize control panel. (Turn on power to panel.)
4. Check overload relay and verify reset mode (if overload is supplied).
5. **WARNING! LIVE VOLTAGE CAN KILL!** Check voltage to the panel and at secondary of control transformer using a voltmeter. If no transformer is supplied, check voltage at the circuit breakers.
6. Check float operation and response of control panel to the float operation. For sequence of operation, refer to design specification.
7. Check full load current with amp probe and compare it with the nameplate rating. (Clamp amp probe around one phase.)
8. With pump running, check discharge to verify the pump is running. Check for flow.
9. *Check voltage with voltmeter, and amperage with amp probe at overhead.*
10. Check operation of start relay, if supplied on single phase panels, per procedure in item #7 of Maintenance Instructions below.
11. Make sure H-O-A switch is left in the "Auto" position after start-up is completed.

Pump Start Up:

Refer to pump "Installation and Service Manual".

PERIODIC MAINTENANCE

WARNING: Before handling these pumps and controls, always disconnect the power first. Do not smoke or use sparkable electrical devices or flames in a septic (gaseous) or possible septic sump.

The maintenance schedule will vary with operating and environmental conditions. It will also vary with the specific type of control supplied. The list herein is a guide only.

1. Exercise breaker through two cycles. Be careful not to over-exercise as the breaker is not a switching device. Excessive operations tend to affect the trip curve of the breaker.
2. Check contactors and relays for excessive humming. This can be accomplished by turning pumps on and off in the hand and off modes with the H-O-A switch.
3. Check bulbs in all fixtures.
4. Check continuity through control fuses.
5. Check voltage at primary and secondary of control transformer.
6. Check the pump full load amps.
7. Check the start relay (if supplied) by using an amp probe around the red wire (start winding). Amp probe should display a very brisk action from zero to locked rotor and back to operating load. This action occurs on pump start, and the action must show no lazy movement.
8. Check junction boxes for moisture. Moisture may cause chattering of relays and contactors.
9. Check door gasket for proper seal. This can be a visual inspection.
10. Check labels to verify they have not been damaged.
11. Lubricate enclosure hinges.
12. Pull floats and check for proper operation and insure there is no foreign build up on them.

SPARE PARTS LIST

The following is a list of recommended spare parts. However, conditions of service vary significantly and a general list may not in its entirety be applicable to a given installation. The user should exercise judgement in defining specific requirements based on this guide.

1. Fuses for control transformer - primary and secondary.
2. Contactor.
3. Bulbs for lights.
4. Corrosion inhibitor.
5. Control transformer.
6. Duplex or simplex pump controller.

TROUBLESHOOTING CHART

1. **WARNING: Before handling these pumps and controls, always disconnect the power first. Do not smoke or use sparkable electrical devices or flames in a septic (gaseous) or possible septic sump.**
2. Pump does not run in hand position.
   a. Check pump circuit breaker, control circuit breaker, and control fuses for tripping or blown condition.
   b. Check overload relay to see if it is tripped. Reset relay if tripped.
   c. Check heat sensor reset to verify thermal overload of motor has not tripped.
   d. Check wiring of pump to control panel. It should agree with the schematic.
3. Pump does not run in auto position.
   a. Check items a. through d. per item #2 above.
   b. Floats may be miswired to control panel. Check float type (N.O. or N.C.) and hook-up by referring to the schematic. If the start and stop floats are hooked in reverse, pump will short cycle and will not pump the level down.
   c. Check pump controller indicating lights.

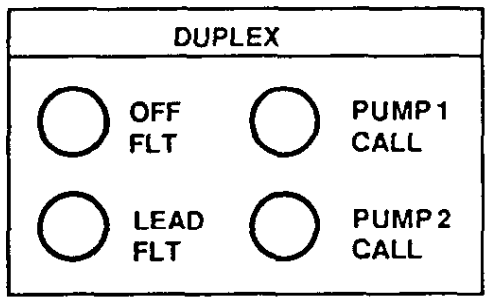

No Lights ON (No call from the floats)

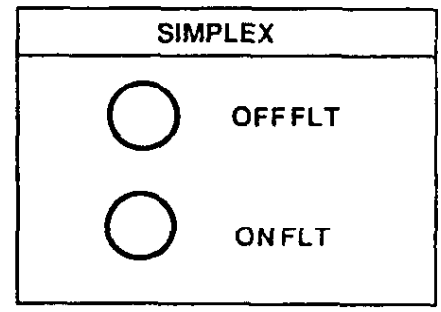

1. Make sure there is power to the controller.
2. Is water level in the system high enough to activate the floats?
3. If #1 and #2 check out, shut power off to the panel. Remove the off float wires and run a jumper between the "OFF FLOAT" connections. If "OFF FLOAT" light comes on, the float is "hung up" or the wiring connections are loose.

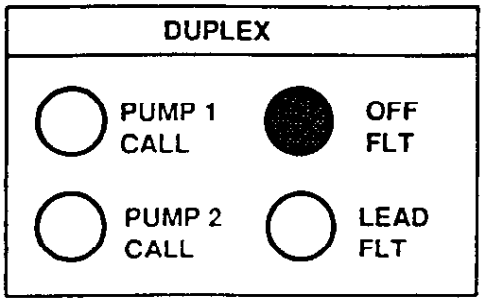

OFF Light ON

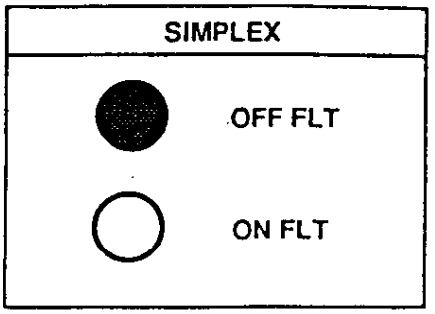

1. Is water level in the system high enough to activate the lead (ON) float?
2. If #1 checks out, shut off power to the panel. Remove the lead (ON) float wires and run a jumper between the "LEAD FLOAT" ("ON FLOAT") connections. If one or two pumps start, check the lead (ON) float for "hang up" or loose wiring connections.

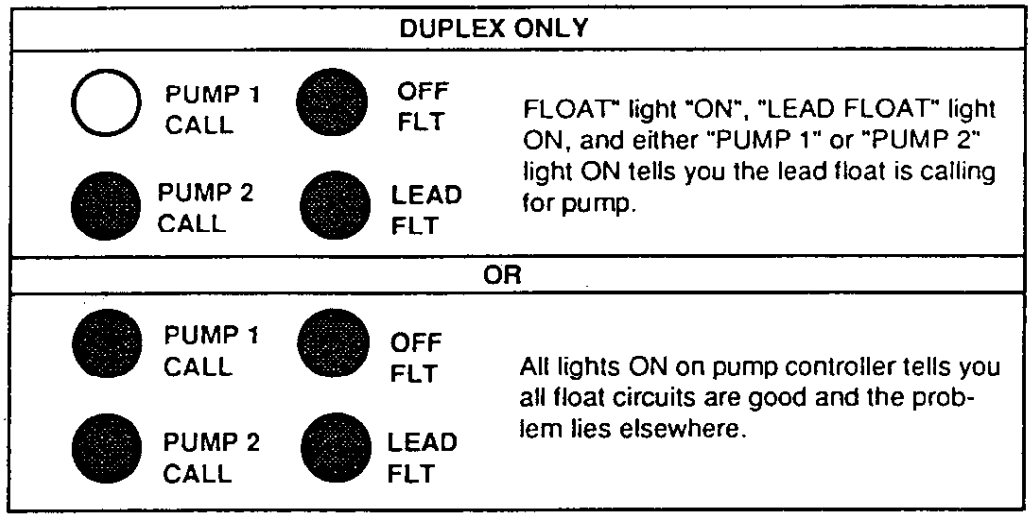

1. Check hand-off-auto (H-O-A) switch for correct position.
2. Check heat sensor trip in pump with a jumper between "HEAT SENSOR 1" and "HEAT SENSOR 2" terminals.
3. Reset overload(s) if tripped.
4. Reset circuit breakers if tripped.

4. Pump runs, but run light does not energize.
   a. Check the bulb.
   b. Check for loose wire at light or in panel.
5. Pump runs but does not pump down the wet well.
   a. Pump rotation may be wrong. Wiring of pump to control panel may be reverse sequenced.
   b. Impeller may be dragging in volute due to solids. High amperage draw would identify this.
   c. Refer to the pump manual for other possibilities such as closed discharge gate valve, etc.
6. Severe humming/chattering of contactors and control relays.
   a. There may be low voltage. Check voltage at primary and secondary of control transformer using a voltmeter. This low voltage condition may even cause severe chattering and burn-out of relays.
   b. Contactor may have dust around magnet of coil structure. Dry or clean as required.
   c. Check voltage to the control panel. Contactors require a minimum of 85% of full voltage to pull in without chatter. If the problem is a reoccuring one, measure voltage with recorder on a 24 hour basis.
   d. Make sure the floats are located away from any turbulence.
   e. Dry out the junction box (if furnished); moisture in the junction box may tend to cause relays to energize intermittently.

7. Nuisance tripping of overload on motor starters or circuit breakers.
   a. Check all reset buttons and tripped breakers.
   b. Check pump and draw with amp probe and compare to name-plate amps on pump.
   c. The impeller may be locked up due to excessive debris or solids.
   d. Possible motor failure (fault on windings.)
   e. Pump may be miswired to terminal block.

f. Voltage and current unbalance. Three phase only.
Voltage unbalance on three-phase power sources can cause motor current to become unbalanced and excessive heating will result. Tripping of the overload protectors, and premature motor failures, can be expected if the current unbalance exceeds five per cent.

$$\text{Percent Current Unbalance} = \frac{\text{Maximum Current Difference From Average Current}}{\text{Average Current}} \times 100$$

To determine if motor current unbalance is a function of the motor, or the power supply:

1. Label the leads and the terminals 1, 2, and 3 respectively.
2. Record the amperage for each lead.
3. Move each lead to the text terminal (1 to 2, 2 to 3, 3 to 1).
4. Again read the amperage of each lead.
5. Move each lead to the next terminal (1 to 3, 2 to 1, 3 to 2).
6. Again read the amperage of each lead.
7. If the unbalance moves with the motor leads, the unbalance is caused by the motor. If the unbalance remains with the terminals, the unbalance is in the power supply.
8. If the current unbalance exceeds five percent, nuisance tripping, or excessive heating will result.
9. Connect leads for the lowest percent of current unbalance.

g. Connections and start components. Single phase only.

1. DISCONNECT ALL POWER FROM THE PANEL BEFORE MAKING THESE CHECKS.
2. Motor winding resistance readings.
   a. Disconnect all three motor leads.
   b. Using a volt-ohm meter, with the scale set on RX1, measure the resistance between the leads with the chart below.

WINDING	TYPICAL MOTOR LEADS	RESISTANCE READING
Main	Black to White	Lowest
Start	Black to Red	Next Lowest (middle)
Both	White to Red	Highest

3. Capacitor check.
   a. Make sure the capacitor is discharged. Use extreme caution as a spark might occur.
   b. Disconnect the capacitor leads and connect a volt-ohm meter to the capacitor terminals.
   c. The meter should indicate low ohms when it is first connected, but as the capacitor becomes charged (by the meter), it will return to a reading of infinity (open circuit).

NOTE: Set the meter on the RX10,000 scale to check the run capacitor.
Set the meter on the RX1,000 scale to check the start capacitor.

4. Start relay check.
   a. Check the coil resistance. It should be 3,000 to 7,000 ohms.
   b. Install a clamp on amp meter around the start winding lead.
   c. Set the amp meter scale to at least 2 times the pump motor full load current.
   d. Place the HOA switch in the hand position to start the pump.
   e. The meter should read approximately 2 times full load current during starting.
   f. After the motor has started (within one second) the current should drop to a value much less than full load current.
5. Motor voltage check.

COMPONENT	TYPICAL MOTOR LEAD	MODE	VOLTAGE READING
Main Winding	Black to White	Start	Line Voltage
Main Winding	Black to White	Run	Line Voltage
Start Winding	Black to Red	Start	Line Voltage
Start Winding	Black to Red	Run	120% Line Voltage

8. Short cycling pump.
   Check float controls.
9. Run light stays on.
   Selector switch may be in the hand position.
10. Test for blown fuse.
   Check for continuity with a V-O-M set on OHM scale.

WARRANTY

Aurora Pump, A Unit of General Signal warrants to the original purchaser of each Hydromatic product(s) that any part thereof which proves to be defective in material or workmanship within one year from date of installation or 18 months from manufacture date, whichever comes first, will be replaced at no charge with a new or remanufactures part, F.O.B. factory. Purchaser shall assume all responsibility and expense for removal, reinstallation and freight. Any item(s) designated manufactured by others shall be covered only by the express warranty of the manufacturer thereof. This warranty s not apply to damage resulting from accident, alteration, design misuse or abuse.

If the material furnished to the Buyer shall fail to conform to this contract or to any of the terms of this written warranty, Aurora Pump shall replace such nonconforming material at the original point of delivery and shall furnish instruction for its disposition. Any transportation charges involved in such disposition shall be for the Buyer's account. The Buyer's exclusive and sole remedy on account or in respect of the furnishing of material that does not conform to this contract, or to this written warranty, shall be to secure replacement thereof as aforesaid. Aurora Pump shall not in any event be liable for the cost of any labor expended on any such material or for any incidental or consequential damages to anyone by reason of the fact that such material does not conform to this contract or to this written warranty.

ALL IMPLIED WARRANTIES, INCLUDING THE IMPLIED WARRANTY OF MERCHANTABILITY AND THE IMPLIED WARRANTY OF FITNESS FOR A PARTICULAR PURPOSE, ARE LIMITED IN DURATION TO THE SAME EXTENT AS THE EXPRESS WARRANTY CONTAINED HEREIN. Some States do not allow limitations on how long an implied warranty lasts, so the above limitation may not apply to you.

MANUFACTURER EXPRESSLY DISCLAIMS AND EXCLUDES ANY LIABILITY FOR CONSEQUENTIAL OR INCIDENTAL DAMAGES FOR BREACH OF ANY EXPRESS OR IMPLIED WARRANTY ARISING IN CONNECTION WITH THIS PRODUCT, INCLUDING WITHOUT LIMITATION, WHETHER IN TORT, NEGLIGENCE, STRICT LIABILITY CONTRACT OR OTHERWISE. Some States do not allow the exclusion or limitation of incidental or consequential damages, so the above limitation or exclusion may not apply to you.

This warranty gives you specific legal rights, and you may also have other rights which vary from State to State.

NOTE: Aurora Pump reserves the right to make revisions to its products and their specifications, and to this bulletin and related information without notice.

Most models are UL Listed and CSA Approved

AURORA/HYDROMATIC PUMP
800 Airport Road
North Aurora, Illinois 60542
Phone: (708) 859-7000
Fax: (708) 859-7060, 7059 or 7034
Telex: 720411 AUR PUMP AUR
Part No.: 13273-000-1 Bulletin Q-701
Issued 1/92 Printed in U.S.A.

SSPMA Certified PUMP

A UNIT OF GENERAL SIGNAL GS

AURORA PUMP

DRAWING NUMBER 11121-001-1 SHEET 1 OF 1

TABLE A

CONTACTORS AND OVERLOADS TORQUE SPEC.

CONTACTORS	POWER TERMINALS	CONTROL TERMINALS
LC1 D09, D12	7 LB-IN	7 LB-IN
D18, D25	15 LB-IN	7 LB-IN
D32	20 LB-IN	7 LB-IN
D40, D50, D65	35 LB-IN	7 LB-IN
D80	75 LB-IN	7 LB-IN
F115	120 LB-IN	7 LB-IN
F150, F185	200 LB-IN	7 LB-IN
F265	275 LB-IN	7 LB-IN
OVERLOADS	**POWER TERMINALS**	**CONTROL TERMINALS**
LR2 D1301 THRU D2353	15 LB-IN	10 LB-IN
LR2 D3353 THRU D3363	75 LB-IN	10 LB-IN
LR1 F105, F125	75 LB-IN	10 LB-IN
LR2 F5367 THRU F5371	200 LB-IN	10 LB-IN

TABLE B

TIGHTENING TORQUE FOR Q-PANEL TERMINALS

ALUMINUM GROUNDING LUGS	45 LB-IN
HYDROMATIC P.C.B. TERMINALS	8 LB-IN
WHITE TERMINAL BLOCK (#10-32 SCREW)	20 LB-IN
WHITE TERMINAL BLOCK (1/4-28 SCREW)	35 LB-IN
WHITE TERMINAL BLOCK (5/16-24 SCREW)	50 LB-IN
WARRICK L.S. RELAY (SERIES 27)	9 LB-IN

REV	ECO NO.	DATE	REVISION DESCRIPTION	BY
A	—	2-18-94	RELEASE FOR PRODUCTION	AC

MATERIAL: —

HYDROMATIC
AURORA / HYDROMATIC PUMPS, INC.

COMPANY CONFIDENTIAL: INFORMATION CONTAINED HEREON IS CONFIDENTIAL. IT IS THE PROPERTY OF GENERAL SIGNAL CORPORATION. IT IS TO BE USED SOLELY FOR THE PURPOSE PROVIDED, AND IT IS NOT TO BE DISCLOSED TO OTHERS WITHOUT THE PRIOR WRITTEN CONSENT OF GENERAL SIGNAL CORPORATION.

UNLESS OTHERWISE SPECIFIED: DIMENSIONS ARE IN INCHES

• DECIMAL •
2 PLACE .XX ± .010"
3 PLACE .XXX ± .005"
ANGLES ± 0° 30'
FINISH = 125 RMS

• FRACTIONAL •
UP TO 12" ± 1/32"
12" & UP ± 1/16"
ANGLES ± 2°

DO NOT SCALE DRAWING

U.L. SCREW TIGHTENING TORQUE TABLES FOR 'Q'-PANEL FIELD WIRING

DRAWN BY	DATE	CHECKED BY	SHEET
AC	2-18-94	WT	1 OF 1

PLOT SCALE	PART NUMBER	SIZE	DRAWING NUMBER	REV.
1 = 1	11121-001-1	A	11121-001-1	A

200/230 VOLTS, SINGLE PHASE, SIMPLEX

NOTE: CONNECT PANEL GROUND LUG TO A GROUND ROD OR A GROUND WIRE FROM THE SUPPLY SERVICE

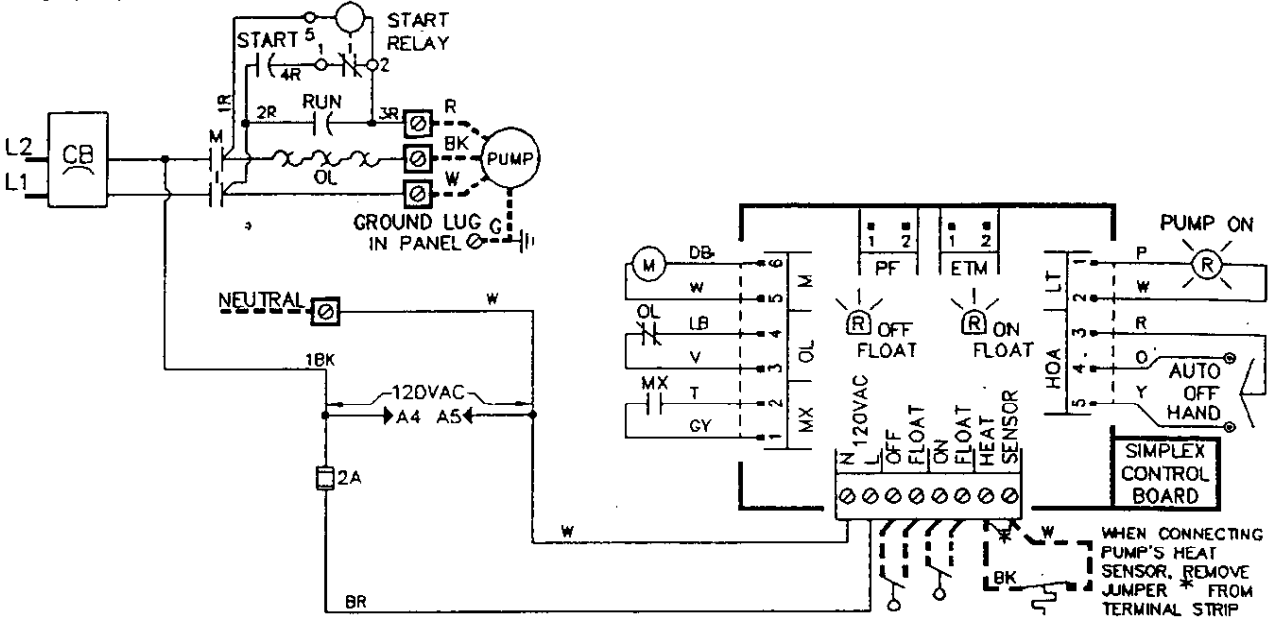

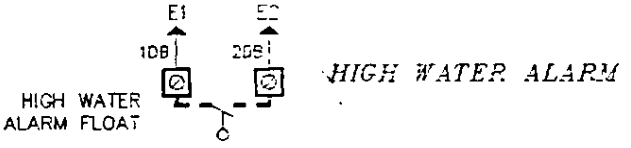

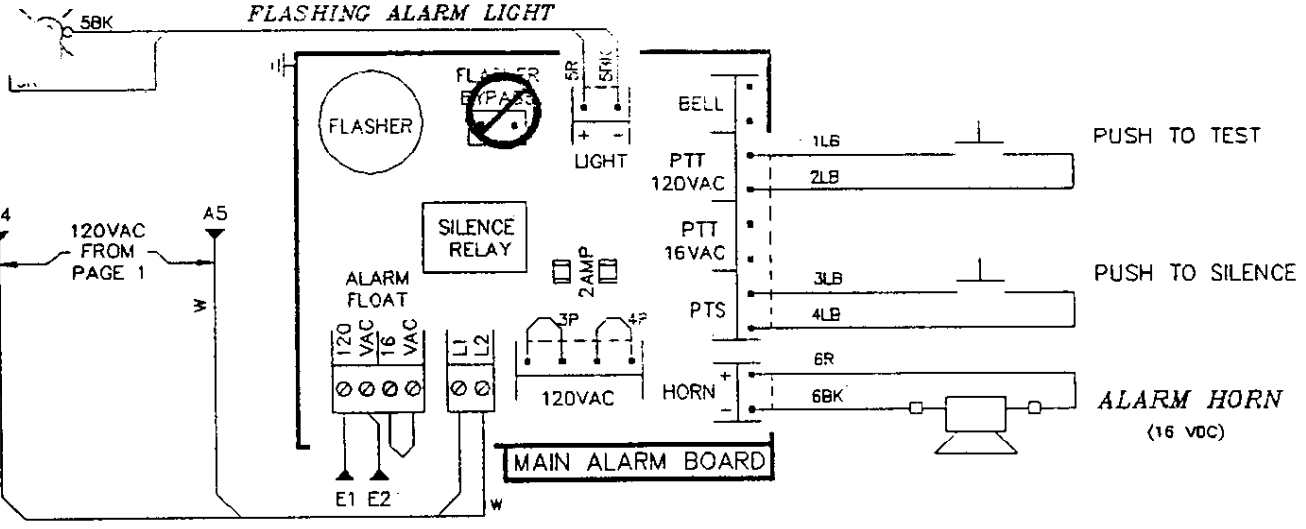

BASE TYPE AAO

NOTE: USE COPPER, 60°C WIRE INSULATION FOR ALL FIELD WIRING TERMINALS

MODEL NO. 1710-AAO-AN1-PG3-PQ1-PS3

HYDROMATIC PUMPS	ELECTRICAL SCHEMATIC/ DIAGRAM	PANEL PART NO. 62023-080-7
		DATE: 09-05-1997 PAGE 1 OF 2

NOTE

WARNING: DISCONNECT POWER BEFORE SERVICING !

IMPORTANT: METAL BACK PANEL TO BE CONNECTED TO A GOOD GROUND IN ACCORDANCE WITH LOCAL ELECTRICAL CODES

→ SYMBOLS FOR CONTINUATION OF WIRING WITHIN THIS SCHEMATIC ←

NOTE

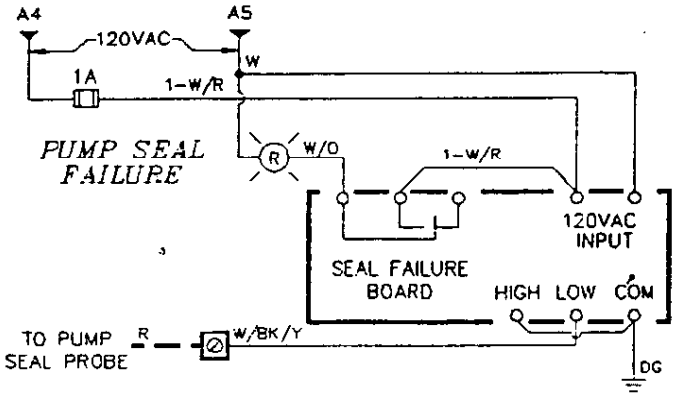

NOTE: USE COPPER, 60°C WIRE INSULATION FOR ALL FIELD WIRING TERMINALS

MODEL NO. 1710-AA0-AN1-PG3-PQ1-PS3

HYDROMATIC PUMPS	ELECTRICAL SCHEMATIC/ DIAGRAM	PANEL PART NO. 62023-080-7	
		DATE: 09-05-1997	PAGE 2 OF 2

NOTE

WARNING: DISCONNECT POWER BEFORE SERVICING !

IMPORTANT: METAL BACK PANEL TO BE CONNECTED TO A GOOD GROUND IN ACCORDANCE WITH LOCAL ELECTRICAL CODES

→ SYMBOLS FOR CONTINUATION OF WIRING WITHIN THIS SCHEMATIC ←

NOTE

200/230 VOLTS, SINGLE PHASE, SIMPLEX

NOTE: CONNECT PANEL GROUND LUG TO A GROUND ROD OR A GROUND WIRE FROM THE SUPPLY SERVICE

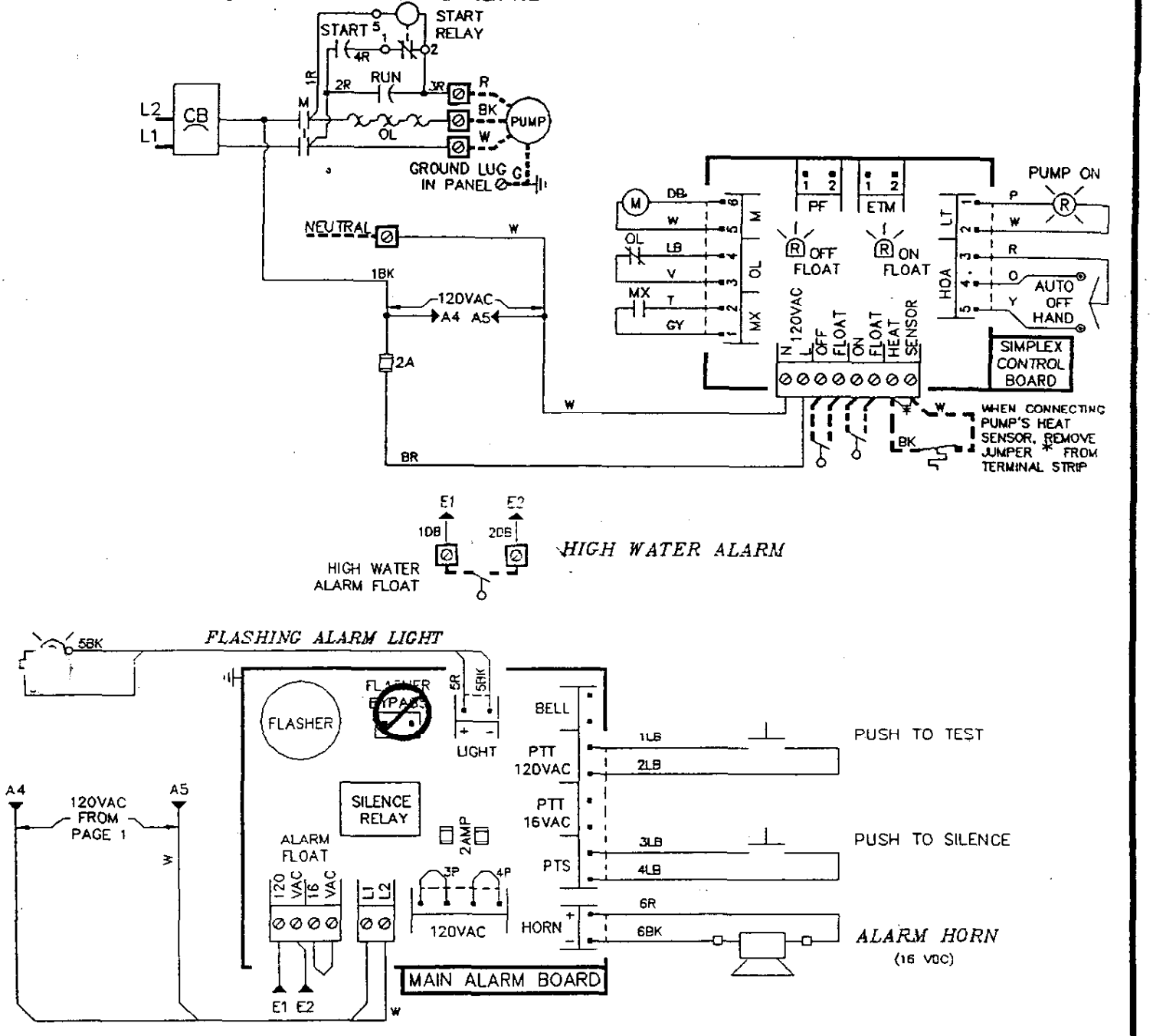

BASE TYPE AAO

NOTE: USE COPPER, 60°C WIRE INSULATION FOR ALL FIELD WIRING TERMINALS

MODEL NO. 17:10-AAO-AN1-PG3-PQ1-PS3

HYDROMATIC PUMPS	ELECTRICAL SCHEMATIC/ DIAGRAM	PANEL PART NO. 62023-080-7	
		DATE: 09-05-1997	PAGE 1 OF 2

NOTE

WARNING: DISCONNECT POWER BEFORE SERVICING !

IMPORTANT: METAL BACK PANEL TO BE CONNECTED TO A GOOD GROUND IN ACCORDANCE WITH LOCAL ELECTRICAL CODES

→ SYMBOLS FOR CONTINUATION OF WIRING WITHIN THIS SCHEMATIC ←

NOTE

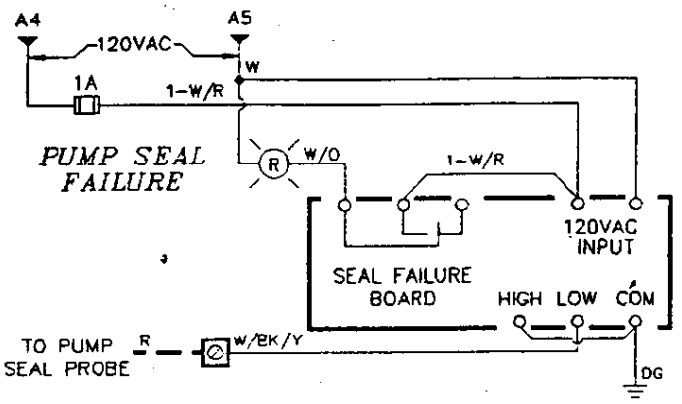

NOTE: USE COPPER, 60°C WIRE INSULATION FOR ALL FIELD WIRING TERMINALS

MODEL NO. 1710-AA0-AN1-PG3-PQ1-PS3

HYDROMATIC PUMPS	ELECTRICAL SCHEMATIC/ DIAGRAM	PANEL PART NO. 62023-080-7
		DATE: 09-05-1997 PAGE 2 OF 2

NOTE

WARNING: DISCONNECT POWER BEFORE SERVICING !

IMPORTANT: METAL BACK PANEL TO BE CONNECTED TO A GOOD GROUND IN ACCORDANCE WITH LOCAL ELECTRICAL CODES

→ SYMBOLS FOR CONTINUATION OF WIRING WITHIN THIS SCHEMATIC ←

NOTE

Bulletin S4N-701

Installation and Service Manual

HYDROMATIC™ S4N

S4N
SUBMERSIBLE NON-CLOG PUMP

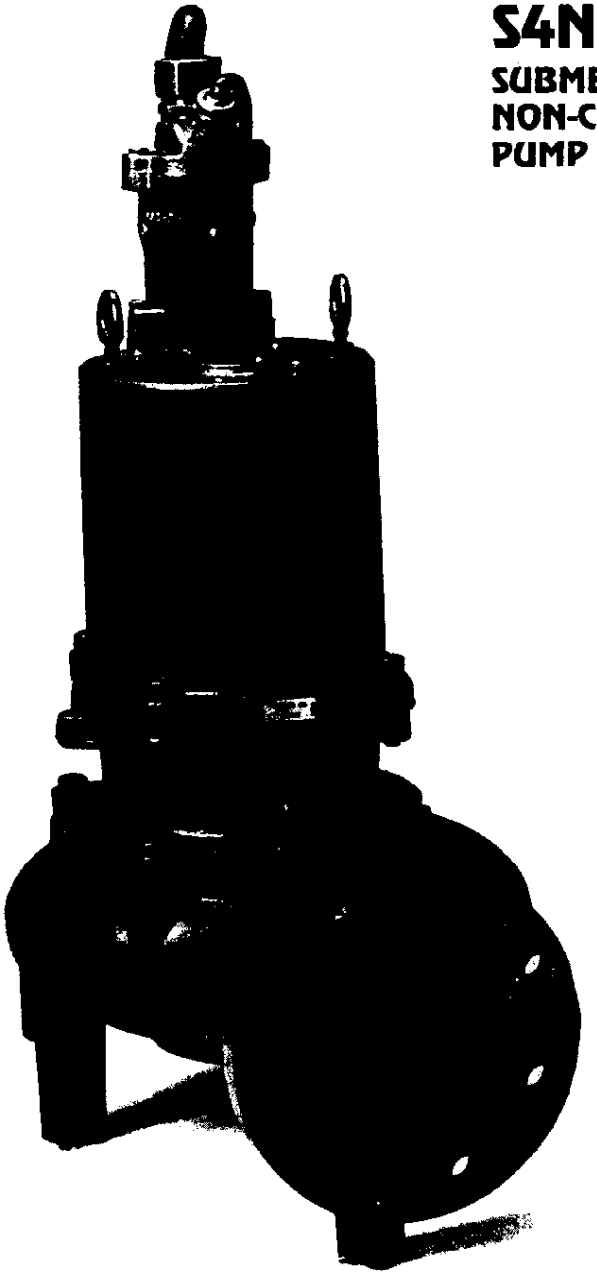

GENERAL SIGNAL PUMP GROUP
A UNIT OF GENERAL SIGNAL

Thank you for purchasing your **Hydromatic** Pump. To help insure years of trouble free operation, please read the following manual carefully.

Warning: Before handling these pumps and controls, always disconnect the power first.

Do not smoke or use sparkable electrical devices or flames in a septic (gaseous) or possible septic sump.

Before operation — Read the following instructions carefully. Reasonable care and safe methods should be practiced. Check local codes and requirements before installation.

TABLE OF CONTENTS

	PAGE
GENERAL INFORMATION	3,4
INSTALLATION INSTRUCTIONS	5,6
OPERATION	6
MAINTENANCE	7,8,9
TROUBLE CHECK LIST	9
PARTS LIST	10,11

1

GENERAL INFORMATION

SHIPPING

When unpacking unit check for concealed damage. CLAIM FOR DAMAGE MUST BE MADE AT THE RECEIVING END THROUGH THE DELIVERING CARRIER. DAMAGE CANNOT BE PROCESSED FROM THE FACTORY.

PUMPS NOT OPERATING OR IN STORAGE

Pumps with carbon ceramic seals must have impellers manually rotated (6 revolutions) after setting non-operational for 3 months or longer and prior to electrical startup.

Pumps with tungsten carbide seals must have impellers manually rotated (6 revolutions) after setting non-operational for 3 weeks or longer and prior to electrical startup.

50 CYCLE OR WYE DELTA

For information and parts list for 50 cycle or wye delta start pumps refer to Addendum S4N-701.

SEAL FAILURE

An electrode is installed in the seal chamber so if any water enters the chamber through the first seal the electrode will be energized and a signal will be transmitted to the sensing unit at ground surface causing a red light to turn on. The electrode probe is installed in all units but the sensing unit is supplied at extra cost and must be ordered.

In operation the seal failure unit indicates only that there is some water in the seal chamber. The pump will continue to operate without damage but the seal should be checked immediately after failure is indicated.

The sensing unit is recommended on all installations as good insurance against motor failure.

PUMP

The S4N submersible pump is supplied for 1 and 3 phase and for 200, 230, 460 or 575 volts. Pump is supplied with 30 feet of power cord and/or 30 feet of auxiliary control cord. Longer cable lengths can be furnished but must be specified at time of order. Power cable is 4 wire with the green wire for ground. Be sure green wire is connected to a good ground such as water pipe or ground stake. The auxiliary cable for seal failure and heat sensors is also 4 wire color coded.

HEAT SENSORS

All motors have heat sensor units embedded in the motor winding to detect excessive heat. The heat sensors are set to trip at 120°C. The sensors automatically reset when motor cools to safe temperature.

The sensors are connected in series with the motor starter coil so that the starter is tripped if heat sensor opens. The motor starter is equipped with overload heaters so all normal overloads are protected by the starter.

IMPORTANT

If Hydromatic electrical starting equipment is not supplied the heat sensor circuit must be connected in series with the starter coil or warranty on motor is void. Connection diagram is included in this manual.

SUMP LEVEL CONTROL

Sump level is controlled by Hydromatic switch controls. The float is held in position in the sump by weight attached to the power cord above the float. The cord supports the float and is adjusted for height from the surface.

Duplex systems use three controls: one set at turn-off, one set at turn-on for one pump, and one set for turn-on for two pumps. Pumps alternate operation on each successive cycle.

Two pumps operate together only if sump level rises to the third or override control. The override control also brings on the second pump in case of failure of the first pump. Extra floats with appropriate controls can be supplied for alarm functions. Triplex systems use four controls: one set at turn-off, one set at turn-on for one pump, one set at turn-on for two pumps, and one set at turn-on for three pumps. Pumps alternate each successive cycle.

Three pumps operate together only if sump level rises to the fourth control (second override). This control also brings on the third pump in case of failure of either or both of the first two pumps.

ALARM CONTROLS

The alarm level is usually set above the override level so the alarm will signal only if the override level is exceeded. However, some engineers prefer to have the alarm level set below the override level as it is possible for one pump to fail and the other pump to operate on the override level with the sump level never reaching the alarm level. This is particularly true in cases of low inflow capacity.

ELECTRICAL CONTROL PANEL

It is recommended that the Hydromatic control panel be used with all pumps as proper starter heaters and connections for heat sensor wires are furnished.

IMPORTANT

If HYDROMATIC electrical controls are not used and the motor fails because of improper components or if the heat sensors are not properly connected the motor guarantee is void.

HYDROMATIC electrical equipment is installed in a weather-proof NEMA 3R enclosure. The electrical equipment includes a main circuit breaker for each pump, a magnetic starter with overload protection for each pump, a H-O-A switch and run light for each pump, an electric alternator and a transformer to provide appropriate control for control circuit and alarms.

OVERLOAD HEATERS

Starters with 3 leg overload protection must be supplied if the HYDROMATIC electrical panel is not used. The heaters must be sized in accordance with the name plate amps on the motor. The amp draw on these submersible motors is slightly higher than a corresponding horsepower surface motor, so heaters must be sized by the name plate rating.

IMPORTANT

Make certain the heat sensor wires are connected in series with the starter coil circuit if other than HYDROMATIC starters are used. Typical wiring diagrams are included.

WIRE SIZE TABLE

FOR REMOTE LOCATION OF CONTROL PANEL
LENGTHS ARE BASED ON A VOLTAGE DROP OF TWO PERCENT

Maximum length in feet from NEMA 4 Junction Box to control panel. All control wires can be = 14–16 or 18 gauge wire. If power lines are greater than 300 volts, and the control wires are used in the same conduit, then the insulation of the control wires must be for 600 volts.

	1 Phase					3 Phase							
		HP					HP						
Wire Size	Volts	1½	2	3	5	Volts	1½	2	3	5	7½	10	15
12	200V	-	-	-	-	200	217	190	101	-	-	-	-
	230	105	95	-	-	230	291	250	134	-	-	-	-
						460	1165	1019	540	412	333	233	-
						575	1820	1450	820	624	515	364	-
10	200	121	111	103	-	200	340	297	158	119	-	-	-
	230	163	148	139	-	230	456	390	210	161	-	-	-
						460	1822	1594	846	645	522	364	-
						575	2847	2270	1360	976	806	569	-
8	200	190	175	162	-	200	533	466	249	187	155	-	-
	230	257	232	219	-	230	715	613	330	252	204	-	-
						460	2860	2500	1328	1013	819	572	390
						575	4468	3570	2145	1532	1266	894	-
6	200	296	272	252	-	200	830	726	387	291	242	170	-
	230	400	362	340	181	230	1114	955	514	393	318	223	-
						460	4455	3898	2068	1577	1275	891	607
						575	-	-	3341	2386	1972	1392	-
4	200	452	416	384	-	200	1268	1110	592	444	370	260	-
	230	610	553	520	276	230	1701	1458	785	601	486	340	232
						460	-	-	3160	2410	1449	1361	928
						575	-	-	-	3646	2513	2127	-
*2	200	689	633	586	-	200	1932	1690	902	676	563	395	-
	230	930	842	792	421	230	2592	2222	1196	915	741	578	353
						460	-	-	-	3672	2969	2074	1414
						575	-	-	-	-	4590	3240	-

*Special Junction Box required for wire sizes larger than #4.

NUMBER OF CONDUCTORS REQUIRED BETWEEN CONTROL PANEL AND NEMA 4 JUNCTION BOX

POWER LINES AND CONTROL WIRES CAN BE CARRIED IN CONDUIT OR CAN BE UNDERGROUND BURIED CABLE

System Type	Number of Control Wires	Number of Power Lines	Number of Ground Wires #8	HEAT SENSOR & SEAL FAILURE	
				Number of Sensor Wires	Number of Ground Wires
Simplex	4	3	1	3	1
Simplex with Alarm	6	3	1	3	1
Duplex	6	6	2	6	2
Duplex With Alarm	8	6	2	6	2

2

INSTALLATION INSTRUCTIONS

INSTALLING PUMP IN SUMP

Before installing pump in sump, lay it on side and turn impeller manually. Impeller may be slightly stuck due to factory test water, so it must be broken loose with small bar or screw driver in edge of vanes. The impeller should turn freely.

Clean all trash and sticks from sump and connect pump to piping.

A check valve must be installed on each pump. A gate or plug valve in each pump discharge line is also recommended. This valve should be installed on the discharge side of the check valve so the line pressure can be cut off if necessary to service the check valve. Single pump systems are sometimes installed without a check valve where it is desirable to self-drain the discharge line to prevent freezing. This can be done only with short discharge lines. Otherwise water will return to the sump and cause short cycling of the pump.

NEMA 4 JUNCTION BOX (OPTIONAL)

A NEMA 4 junction box should be used to make power and control connections if electrical control panel is to be set remote from the pump sump. The HYDROMATIC Nema 4 junction box is provided with compression connectors for sealing all wires. No sealing compound is needed to make connections waterproof.

Wiring diagrams are provided with panel for making connections. An extra set of diagrams are included so that one set can be used in the sump when making connections. The size wire to use from panel to sump depends on motor size and distance in feet.

The "wire size table" on Page 4 can be used as a guide for wire size. Be sure each wire is checked out so that a wrong connection will not be made. An ohmmeter or Megger can be used to check wire continuity. Attach one side of meter to ground and other side to one side at control panel. Then have person in sump touch one wire to ground. If wire is correct, meter will show reading. A Walkie-Talkie radio is useful if some distance exists between sump and panel.

INSTALLING SWITCH CONTROLS

The controls are supported by a mounting bracket that is attached to sump wall, cover, or to the NEMA 4 junction box.

Cord snubbers are used to hold the cord in place. Control level can be changed at any time by loosening the snubber and readjusting cord length.

In either a simplex or duplex system, the lower or turn-off control is set just above the top of volute, so that the volute will always be submerged during the pumping cycle. The second, or turn-on control, is set about 24 inches above the lower turn-off control.

More distance between turn-on and turn-off controls can be used, but sewage may become septic, and excessive solids may collect for the pump to handle. A frequent pumping cycle is recommended for best operation.

If an alarm system is used, this control is usually set about 6 inches above the override control.

Some engineers, as described previously, prefer to have the alarm control set below the override control.

MAKING ELECTRICAL CONNECTIONS

All electrical wiring must be in accordance with local codes, and only competent electricians should make the installations. Complete wiring diagrams are glued to the inside cover of the panel, and an additional set of prints is included for use in making the installation. All wires should be checked for grounds with an ohmmeter or Megger after the

Fig. 1

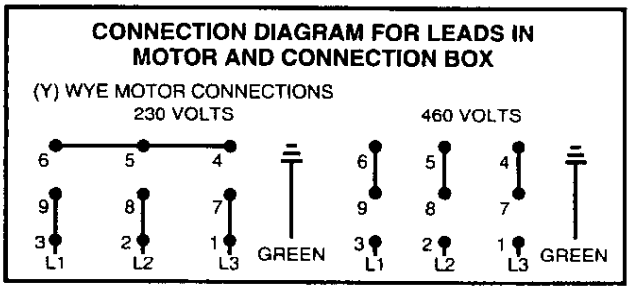

Fig. 2

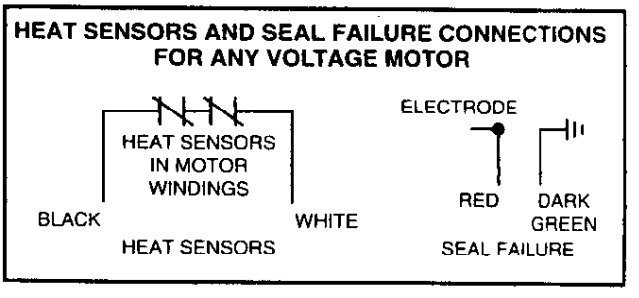

connections are made. THIS IS IMPORTANT, AS ONE GROUNDED WIRE CAN CAUSE CONSIDERABLE TROUBLE. (See Figure 1).

NOTE: For wiring diagram for wye delta, see Addendum S4N-701.

IMPORTANT

If equipment is not properly wired and protected as recommended, the motor guarantee is void.

HEAT SENSORS AND SEAL FAILURE CONNECTIONS

Be sure heat sensor wires are connected in series with the starter coil. Connections are provided on the terminal strip (see wiring diagram).

If seal failure unit is used, connect as shown with seal failure system. If seal failure unit is not used, the two seal failure wires are left open.

DO NOT CONNECT POWER TO THESE LINES AT ANY TIME. (See Figures 2 and 3.)

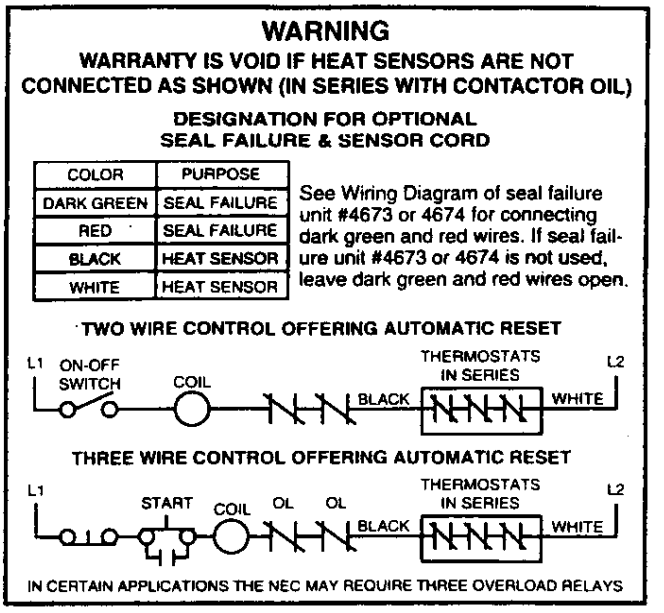

Fig. 3

3 OPERATION

STARTING SYSTEM

1. Turn H-O-A switch to off-position and then turn on main circuit breakers.
2. Open all discharge valves and allow water to rise in sump.
3. Turn H-O-A switch to Hand position on one pump and notice operation. If pump is noisy and vibrates, rotation is wrong. To change rotation, interchange any two line leads to motor 3ø only). DO NOT INTERCHANGE MAIN INCOMING LINES. If duplex system, check second pump in same manner.
4. Now set both H-O-A switches to Auto position and allow water to rise in sump until one pump starts. Allow pump to operate until level drops to turn-off point.
5. Allow sump level to rise to start other pump. Notice run lights on panel. Pumps should alternate on each successive cycle of operation.
6. Turn both H-O-A switches to off position and allow sump to fill to the override control level.
7. Turn both switches to Auto position and both pumps should start and operate together until level drops to turn-off point.
8. Repeat this operation cycle several times before leaving job.
9. Check voltage when pumps are operating and check the amp draw of each pump. Check amps on each wire, as sometimes a high leg will exist. One leg can be somewhat higher (5 to 10%) without causing trouble. For excessive amp draw on one leg, the Power Company should be consulted.

PHASE CONVERTERS

Phase converters are generally not recommended, but in cases where only single phase current is available, phase converters can be used. Be sure to size the phase converter large enough for the amp draw specified on the motor name plate, not necessarily by motor horsepower. The warranty on all three phase submersible motors is void if operated with single phase power through a phase converter, and 3 leg ambient compensated extra-quick trip overload protectors are not used.

4

MAINTENANCE

Lubrication or other maintenance is not required, as the motors are oil filled.

If a seal failure unit is used, no attention is necessary as long as the seal shows satisfactory operation.

If seal failure is not used, the pump should be lifted once every two years and the oil drained from the seal chamber to check for water.

Generally, these pumps give very reliable service, and can be expected to operate for many years without failure under normal operating conditions.

LIGHTNING

In some areas where considerable lightning occurs, it is recommended that a lightning arrestor be installed at the control panel. Lightning arrestors are good insurance against damage to an expensive motor.

SERVICING INSTRUCTIONS

Important: Read all instructions before replacing any parts.

Warning: Before handling these pumps and controls, always disconnect the power first.

Do not smoke or use sparkable electrical devices or flames in a septic (gaseous) or possible septic sump.

FIELD SERVICE ON MOTOR

All S4N submersible motors can be serviced (out of warranty) in the field by any reliable motor service shop. Any pump (in warranty) must be returned to the factory for service or repaired in an authorized Hydromatic service center. Charges will not be allowed if (in warranty) pump is taken to a motor repair shop that is not an authorized Hydromatic service center.

When field service is performed on a pump these instructions should be carefully followed.

REPLACING STATOR

If motor winding is burned or shorted it can be rewound or replaced with new factory wound stator. Refer to sectional drawing of pump and motor and use following steps to remove and replace stator.

1. If stator only is damaged it may not be necessary to completely dismantle pump as stator and housing can be lifted from pump without disturbing seals or bearings.
2. Drain all oil from upper housing, remove from upper housing, remove drain plug in bottom of stator housing and remove plug in top of housing to allow air to enter.
3. After chamber is drained, remove hold down bolts and lift off. Use care in lifting as the seal failure connecting wire must be disconnected before housing is completely removed. See sectional drawing.
4. Set assembly on bench and remove connection box. When box is lifted off connection wires to motor will be exposed. These wires will probably be burned but each wire is tagged with a metal marker giving wire number. Cut the wires.

   If the leads to the connection box are burned, a complete new connection box with new wire must be used. The wires are potted in with sealing compound and a new unit must be obtained from the factory.
5. The stator is held in the housing with a bolted-in clamp ring.
6. After ring is removed turn housing upright and bump on hardwood blocks. This should jar the stator loose and allow it to drop out.
7. Thoroughly clean housing before replacing new stator. Replace stator and make all wire connections to connection box before replacing housing on pump. This is important as leads must be tucked behind the windings by using hands up through rotor core.

IMPORTANT: Use only compression type insulated connectors on the wires.

Do not tape leads as oil will deteriorate the tape and cause damage to stator and bearings.

8. Drain oil from chamber. If oil is clean and no water is present, seals can be considered satisfactory to reuse.
9. Check top bearing. If clean and does not turn rough, bearings can be reused and it is not necessary to completely dismantle pump to change bearings. If bearings are damaged with dirt or heat they must be replaced. See additional instructions on replacing seals and bearings (Page 8). Remember to reinstall the upper bearing load spring.
10. Replace stator housing onto seal chamber and bolt in place. BE SURE SEAL FAILURE WIRE IS CONNECTED BEFORE HOUSING IS ASSEMBLED.

Be sure O-ring seal has been replaced. If O-ring is nicked or cut replace with new ones. This applies to all O-rings used in assembly.

11. After all leads are reconnected in the connection box make a high voltage ground test on each wire. The only wire that should show ground is the green power lead and the ground lead in the auxiliary control cable.

12. For safety, complete pump should be air checked under water for leaks. If seals were O.K. refill seal chamber with oil. Lay pump on side for this oil filling with oil fill hole upright. Do not completely fill, leave oil about 1 inch below plug hole. Use only HYDROMATIC submersible oil in this chamber or high grade transformer oil. Replace plug, use permatex on threads. Install air valve in top plug opening of motor housing and charge housing with about 10 PSI of air. Be sure air is dry. Do not use air line where water may be trapped in the line. Submerge complete unit under water and check for leaks.

13. Refill motor chamber with oil. Use high grade transformer oil or HYDROMATIC special submersible oil. Fill chamber until oil covers top of windings. Leave air space in top for expansion. Use permatex on plug threads.

REPLACING SEALS AND BEARINGS

1. Drain all oil from motor chamber and seal chamber as described.

2. Remove motor housing as described.

3. Remove bolts that hold seal chamber to pump housing. Use back off screws to break loose. With hard wood block, tape end of impeller to loosen from shaft. When free, remove impeller from shaft.

4. Lift rotating assembly (rotor, shaft and impeller) from pump case and place horizontally on bench.

5. **Impeller removal— S4N**

   Hold motor and remove bolt and washer from impeller end of shaft. Impeller is threaded to the shaft so tap face of impeller with hard wood block to free threads. Holding rotor, turn impeller counterclockwise as thread is right hand.

   IMPORTANT: The impeller is designed to be self-tightening when running so impeller may be difficult to break loose. If this is the case, use plastic or rubber hammer on impeller tip to free. Remove impeller.

6. Shaft sleeves are not used.

7. Remove lower seal spring and pry out seal with screwdriver.

8. To remove seal housing, take out socket head bolts and using bolts in back of holes, pry plates loose. This will force out lower seal if not already removed.

9. Remove snap ring that holds upper seal. Pull seal if it is free. If not free, it can be forced off when shaft is removed.

10. Remove 4 bolts that hold bearing housing in place. Set assembly in upright position and bump end of shaft on hard wood block. This will push the bearing from the housing and will force upper seal from shaft.

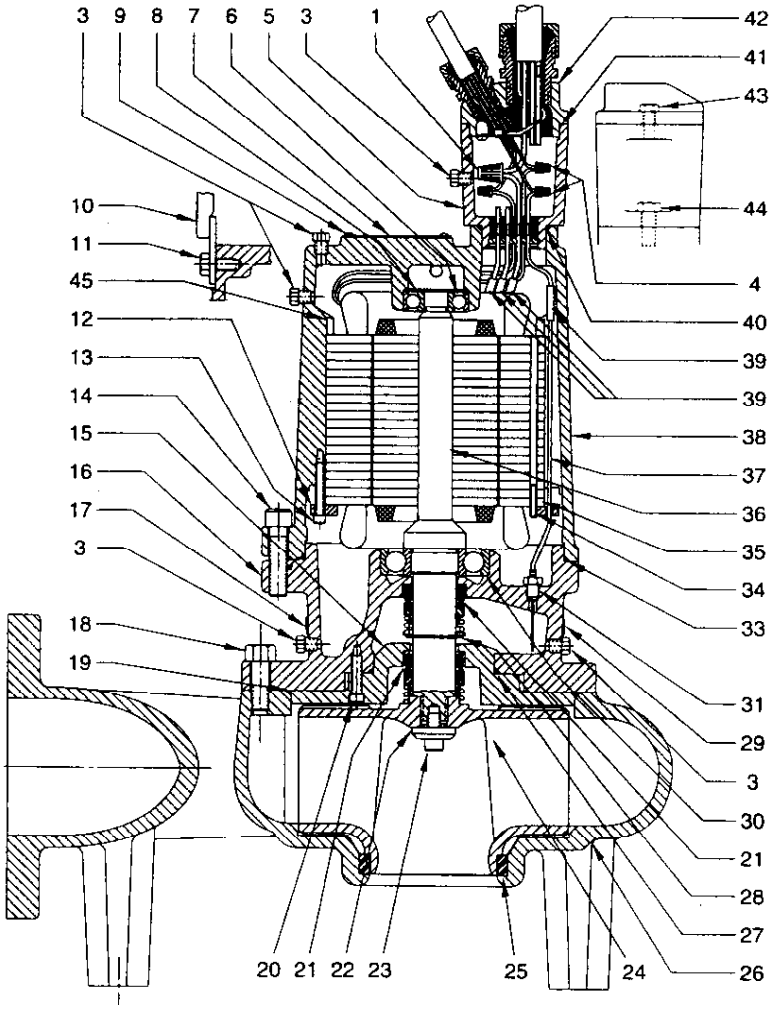

11. Use bearing puller to remove bearings. Replace with new bearings. Press only on inner race of bearing when replacing. Pressing on outer race can damage the bearing. Bearings are standard size that can be obtained from any bearing supply house or can be obtained from HYDROMATIC factory.
12. IMPORTANT: DO NOT USE ANY OF THE OLD SEAL PARTS. REPLACE WITH ALL NEW SEALS.
13. Thoroughly clean all castings before replacing seals. One grain of dirt between the seal faces can cause failure.
14. Examine all O-rings for nicks before using.
15. Use Locktite on socket head locking screw in end of shaft.

5

TROUBLE CHECK LIST

Below is a list of common problems and the probable causes:

Pump will not start

1. No power to the motor. Check for blown fuse or open circuit breaker.
2. Selector switch may be in the off position.
3. Control circuit transformer fuse may be blown.
4. Overload heater on starter may be tripped. Push to reset.

Pump will not start and overload heaters trip

1. Turn off power and check motor leads with megger or ohmmeter for possible ground.
2. Check resistance of motor windings. All 3 phases should show the same reading.
3. If no grounds exist and the motor windings check O.K. remove pump from sump and check for clogged or blocked impeller.

Pump operates with selector switch in hand position but will not operate in auto position

1. This indicates trouble in the float level control or the alternator relay.
2. Check control panel for trouble.

Pump runs but will not shut off

1. Pump may be air locked. Turn pump off and let set for several minutes then restart.
2. Lower float control may be hung-up in the closed position. Check in sump to be sure control is free.
3. Selector switch may be in the Hand Position.

Pump does not deliver proper capacity

1. Discharge gate valve may be partially closed or partially clogged.
2. Check valve may be partially clogged. Raise level up and down to clear.
3. Pump may be running in wrong direction. Low speed pumps can operate in reverse direction without much noise or vibration.
4. Discharge head may be too high. Check total head with gage when pump is operating. Total head is discharge gage pressure converted to feet plus vertical height from water level in sump to center line of pressure gage in discharge line. Gauge should be installed on pump side of all valves. Multiply gage pressure in pounds by 2.31 to get head in feet.
5. If pump has been in service for some time and capacity falls off, remove pump and check for wear or clogged impeller.

Motor stops and then restarts after short period but overload heaters in starter do not trip

1. This indicates heat sensors in the motor are tripping due to excessive heat. Impeller may be partially clogged giving a sustained overload but not high enough to trip overload heater switch.
2. Motor may be operating out of liquid due to a failed level control. All HYDROMATIC S4N submersible motors can operate for extended periods out of water without burning up the winding but the heat sensors give motor prolonged life by controlling winding temperature.
3. Pump may be operating on a short cycle due to sump being too small or from water returning to sump due to a leaking check valve.

S4N PARTS LIST

Ref. No.	Part No.	Part Description		Qty.
1	00853-000-1	Wire Connector (230V 3ø Only)		2
	00557-000-1	Wire Connector (460/3/60)		6
	00557-000-1	Wire Connector (200/230/1/60 & 200/575/3/60)		3
3	00087-004-1	Pipe Plug		5
4	00073-000-1	Wire Connector (Dual Cord)		3
5	05430-002-5	Connection Box Assy. 200/3/60 & 200/1/60		1
	05430-002-5	Connection Box Assy. 200/1/60 & 575/3/60		1
	05430-005-5	Connection Box Assy. 230/460/3/60		1
6	00065-021-1	Upper Bearing	R	1
7	13425-016-1	Nameplate		1
8	00064-003-1	Load Spring		1
9	04580-001-1	Drive Screw		3
10	00589-002-1	Jam Nut		2
11	01032-002-1	Eye Bolt		2
12	00299-002-1	Stator Retaining Ring		1
13	00517-007-1	Soc. Hd. Capscrew 1HP 3ø		4
	00517-008-1	Soc. Hd. Capscrew All Other HP & ø		4
14	00568-007-1	Soc. Hd. Capscrew		4
15	07990-000-2	Seal Housing		1
16	07145-000-2	Bearing Housing		1
17	08206-000-1	Instruction Plate		1
18	00239-007-1	Hex Hd. Capscrew		4
19	00150-023-1	O-Ring	SC	1
20	00517-007-1	Soc. Hd. Capscrew		3
21	04916-000-1	Seal (Ceramic) Std.	SC	2
	04916-001-1	Seal (Carbide) Opt.	C	1
22	04976-002-5	Impeller Washer		1
23	00556-004-1	Soc. Hd. Capscrew		1
24	07992-000-2	Impeller 8.00" Dia.		1
	07992-011-2	Impeller 7.54" Dia.		1
	07992-001-2	Impeller 7.50" Dia.		1
	07992-023-2	Impeller 6.90" Dia.		1
	07992-025-2	Impeller 6.37" Dia.		1
	07992-014-2	Impeller 6.28" Dia.		1
	07992-016-2	Impeller 5.70" Dia.		1
	07992-027-2	Impeller 5.54" Dia.		1
25	04906-000-3	Wear Ring		1
26	07993-001-5	Volute Case Assy. (Includes Wear Ring)		1
27	00150-029-1	O-Ring	SC	1
28	00975-012-1	Snap Ring		1
29	08206-001-1	Instruction Plate		1
30	00065-018-1	Lower Bearing	R	1
31	08472-001-5	Seal Failure Assy.		1
33	00150-020-1	O-Ring	SC	1
34	05454-001-1	Spring Pin		1
35	07774-203-1	Stator 1HP 200/1/60 1150 RPM	R	1
	07774-003-1	Stator 1HP 230/1/60 1150 RPM	R	1
	07773-203-1	Stator 1HP 200/3/60 1150 RPM	R	1
	07773-003-1	Stator 1HP 230/460/3/60 1150 RPM	R	1
	07773-603-1	Stator 1HP 575/3/60 1150 RPM	R	1
	00865-203-1	Stator 2HP 200/1/60 1150 RPM	R	1

Ref. No.	Part No.	Part Description		Qty.
35	00865-003-1	Stator 2HP 230/1/60 1150 RPM	R	1
	00919-203-1	Stator 2HP 200/3/60 1150 RPM	R	1
	00919-003-1	Stator 2HP 230/460/3/60 1150 RPM	R	1
	00919-603-1	Stator 2HP 575/3/60 1150 RPM	R	1
	10922-203-1	Stator 3HP 200/1/60 1750 RPM	R	1
	10922-003-1	Stator 3HP 230/1/60 1750 RPM	R	1
	07860-203-1	Stator 3HP 200/3/60 1750 RPM	R	1
	07860-003-1	Stator 3HP 230/460/3/60 1750 RPM	R	1
	07860-603-1	Stator 3HP 575/3/60 1750 RPM	R	1
	12750-003-1	Stator 5HP 230/1/60 1750 RPM	R	1
	01329-203-1	Stator 5HP 200/3/60 1750 RPM	R	1
	01329-003-1	Stator 5HP 230/460/3/60 1750 RPM	R	1
	01329-603-1	Stator 5HP 575/3/60 1750 RPM	R	1
	11382-203-1	Stator 7½HP 200/3/60 1750 RPM	R	1
	11382-003-1	Stator 7½HP 230/460/3/60 1750 RPM	R	1
	11382-603-1	Stator 7½HP 575/3/60 1750 RPM	R	1
36	12750-014-5	Rotor & Shaft Assy. 5HP		1
	11382-014-5	Rotor & Shaft Assy. 7.5HP		1
	07774-013-5	Rotor & Shaft Assy. 1HP 200/230/1/60		1
	07773-013-5	Rotor & Shaft Assy. 1HP 200/230/460/575/3/60		1
	00865-014-5	Rotor & Shaft Assy. 2HP 200/230/1/60		1
	00919-014-5	Rotor & Shaft Assy. 2HP 200/230/460/575/3/60		1
	10922-014-5	Rotor & Shaft Assy. 3HP 200/230/1/60		1
	01329-014-5	Rotor & Shaft Assy. 3 & 5HP 200/230/460/575/3/60		1
37	06000-014-5	Seal Failure Wire Assy.		1
38	00294-001-2	Motor Housing 1HP 3ø Only		1
	00294-002-2	Motor Housing All Other HP & ø		1
39	00282-001-1	Wire Connector 1ø 575/3/60 & 200/3/60		6
	00282-001-1	Wire Connector 230/460/3/60		12
40	00834-008-1	O-Ring	SC	1
41	00834-010-1	O-Ring	SC	1
42	05464-030-5	Cord Cap Assy. 30' Dual 10/4 (All except 200/1/60 3HP & 230/1/60 5HP)		1
	05464-031-5	Cord Cap Assy. 30' Dual 8/4 (200/1/60 3HP)		1
	05464-032-5	Cord Cap Assy. 30' Dual 6/3 (230/1/60 5HP)		1
	05464-050-5	Cord Cap Assy. 50' Dual 10/4 (All except 200/1/60 3HP & 230/1/60 5HP)		1
	05464-051-5	Cord Cap Assy. 50' Dual 10/4 (200/1/60 3HP)		1
	05464-052-5	Cord Cap Assy. 50' Dual 6/3 (230/1/60 5HP)		1
43	00101-007-1	Capscrew		2
44	00238-003-1	Capscrew		2
45	00736-002-1	Spacer Ring (200/230/1/60 1HP)		1
	00736-001-1	Spacer Ring (200/230/460 & 575/3/60 2HP) & (200/230/1/60 3HP)		1
	51700-016-7	Seal Kit	R	
	51700-316-7	Carbide Seal Kit		
	*	Rebuild Kit		

Notes: S — Parts in Seal Kit C — Parts in Carbide Seal Kit R — Parts in Rebuild Kit *Consult Factory

ORDERING REPLACEMENT PARTS: Product improvements are made from time to time. The latest part design will be furnished as long as it is interchangeable with the old part. When ordering replacement parts, always furnish the following information: (1) pump serial number, (2) pump model and size, (3) part description, (4) part number, (5) impeller diameter (if ordering impeller), (6) quantity required, and (7) shipping instructions.

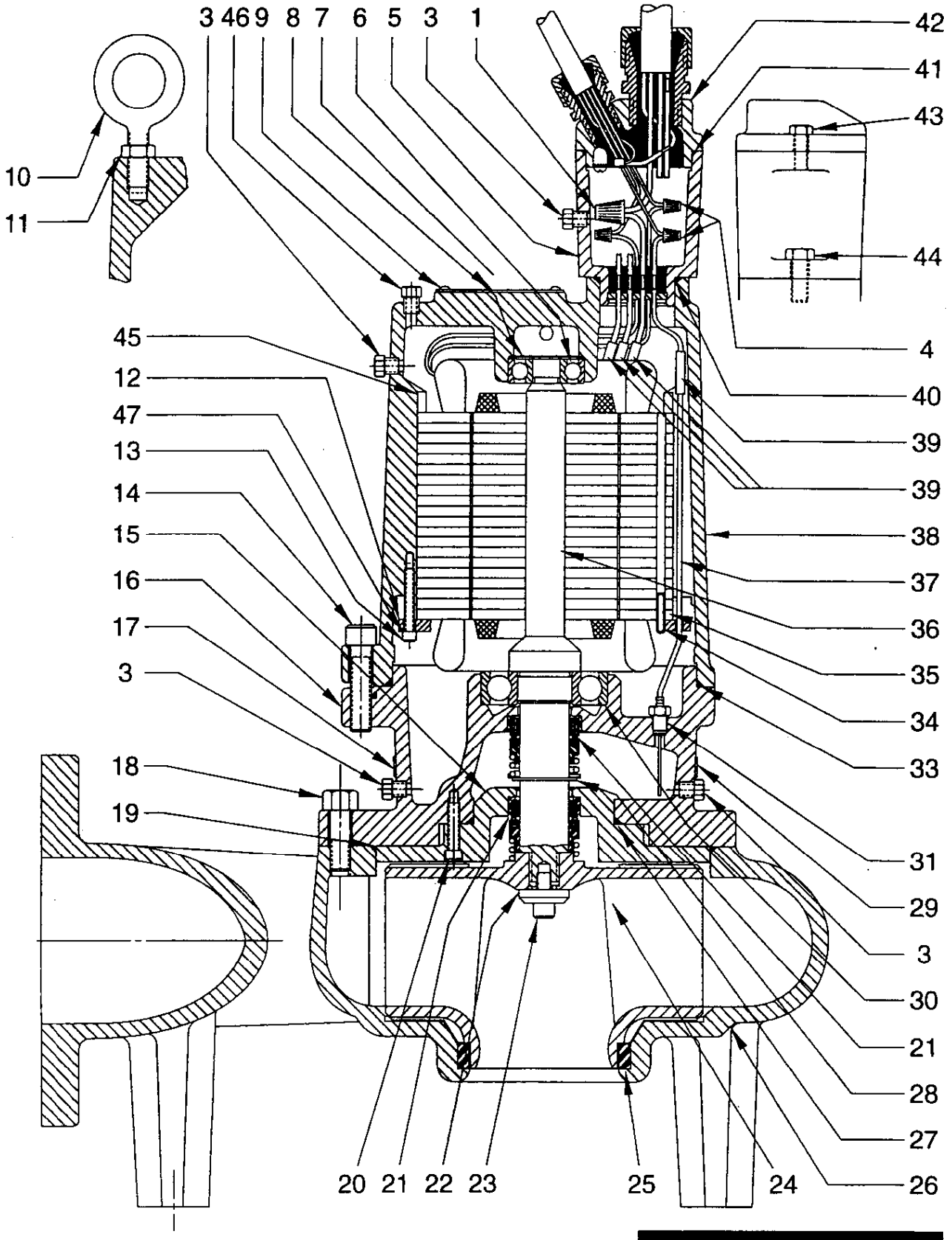
3 46 9 8 7 6 5 3 1
42
41
43
10
11
44
4
45
12
40
47
39
13
39
14
38
15
37
16
36
17
35
3
34
33
18
19
31
29
3
30
21
28
27
26
20 21 22 23
25
24

S4N

WARRANTY

Hydromatic Pumps, Inc. warrants to the original purchaser of each Hydromatic product(s) that any part thereof which proves to be defective in material or workmanship within one year from date of installation or 18 months from manufacture date, whichever comes first, will be replaced at no charge with a new or remanufactured part, F.O.B. factory. Purchaser shall assume all responsibility and expense from removal, reinstallation and freight. Any item(s) designated as manufactured by others shall be covered only by the express warranty of the manufacturer thereof. This warranty does not apply to damage resulting from accident, alteration, design, misuse or abuse. The pump must be installed, operated and maintained in accordance with the published instructions of the appropriate Installation & Service Manual.

All dual seal non-clogs and 3–5 HP grinders must have seal failure and heat sensors attached and functional for Warranty to be in effect. If a seal failure should occur, Hydromatic Pumps will cover only the lower seal and labor thereof. Labor based on Authorized Service Center contract allowance. If the heat sensor is not attached and functional, Warranty is void. If the seal failure sensor is not attached and functional, Warranty is void.

If the material furnished to the Buyer shall fail to conform to this contract or to any of the terms of this written warranty, Hydromatic Pumps, Inc. shall replace such nonconforming material at the original point of delivery and shall furnish instruction for its disposition. Any transportation charges involved in such disposition shall be for the Buyer's account. The Buyer's exclusive and sole remedy on account or in respect of the furnishing of material that does not conform to this contract or to this written warranty, shall be to secure replacement thereof as aforesaid. Hydromatic Pumps, Inc. shall not in any event be liable for the cost of any labor expended on any such material or for any incidental or consequential damages to anyone by reason of the fact that such material does not conform to this contract or to this written warranty.

ALL IMPLIED WARRANTIES, INCLUDING THE IMPLIED WARRANTY OF MERCHANTABILITY AND THE IMPLIED WARRANTY OF FITNESS FOR A PARTICULAR PURPOSE, ARE DISCLAIMED TO THE SAME EXTENT AS THE EXPRESS WARRANTY CONTAINED HEREIN. Some states do not allow limitations on how long an implied warranty lasts, so the above limitation may not apply to you.

MANUFACTURER EXPRESSLY DISCLAIMS AND EXCLUDES ANY LIABILITY FOR CONSEQUENTIAL OR INCIDENTAL DAMAGES FOR BREACH OF ANY EXPRESS OR IMPLIED WARRANTY ARISING IN CONNECTION WITH THIS PRODUCT, INCLUDING WITHOUT LIMITATION, WHETHER IN TORT, NEGLIGENCE, STRICT LIABILITY CONTRACT OR OTHERWISE. Some States do not allow the exclusion or limitation of incidental or consequential damages, so the above limitation or exclusion may not apply to you.

This warranty gives you specific legal rights, and you may also have other rights which vary from State to State.

For assistance or to order replacement parts, contact Hydromatic or your local Authorized Distributor.

- Your Local Authorized Distributor -

GENERAL SIGNAL PUMP GROUP
A UNIT OF GENERAL SIGNAL

HYDROMATIC PUMPS, INC.
1840 BANEY ROAD
ASHLAND, OHIO 44805 U.S.A.
PHONE: (419) 289-3042
PHONE: (630) 892-3863 (Parts Distribution Center)
FAX: (630) 892-2393 (Parts Distribution Center)
After August 3, 1996 use area code (630) instead of (708).

Submersible Wastewater Pump Association SWPA MEMBER

Part #5625-309-1
HE-INST-309-1 (7/96)

HE-INST-309-1 (7/96) - 4M (7/96)

APPENDIX C

PHOTOGRAPHS

Photographs

Photo	Page
Roll 26, Frame 09, 5/6/96, West sump discharge to stripper and sump	C-3
Roll 26, Frame 11, 5/6/96, Stripper at the west sump	C-3
Roll 26, Frame 17, 6/17/96, East sump smoke test	C-4
Roll 26, Frame 18, 6/17/96, East sump smoke test	C-4
Roll 26, Frame 19, 6/17/96, East sump smoke test at Building 146 (east side)	C-5
Roll 26, Frame 20, 6/17/96, West sump smoke test	C-5
Roll 26, Frame 21, 6/17/96, West sump smoke test	C-6
Roll 26, Frame 22, 6/17/96, West sump smoke test at Building 146 (west side)	C-6
Roll 26, Frame 23, 6/17/96, New air stripper at west sump. Air stripper processed water from east and west sumps	C-7
Roll 26, Frame 24, 6/17/96, New air stripper at west sump. Air stripper processed water from east and west sumps	C-8
Roll 26, Frame 25, 6/17/96, Sanitary sewer 70 feet east of west sump, smoke visible in sewer	C-9
Roll 28, Frame 15, 7/9/96, Excavation of sewer inlet piping to west sump	C-9
Roll 28, Frame 16, 7/9/96, Excavation of sewer and inlet piping to west sump	C-10
Roll 28, Frame 17, 7/9/96, Excavation of sewer inlet piping to west sump	C-10
Roll 28, Frame 18, 7/9/96, Further digging located broken sewer pipe	C-11
Roll 28, Frame 19, 7/9/96, Further digging located broken sewer pipe	C-11
Roll 28, Frame 20, 7/9/96, Sump and sewer pipe, sump pipe with 6 inch hole	C-12
Roll 28, Frame 22, 7/9/96, Damaged sewer pipeline	C-13
Roll 28, Frame 35, 7/11/96, Clamp on sewer pipe over inlet pipe to sump	C-14
Roll 28, Frame 36, 7/11/96, Grouting in the pipe; sanitary sewer	C-14
Roll 28, Frame 37, 7/12/96, Sewer pipe repair, ends grouted in, ready to backfill	C-15

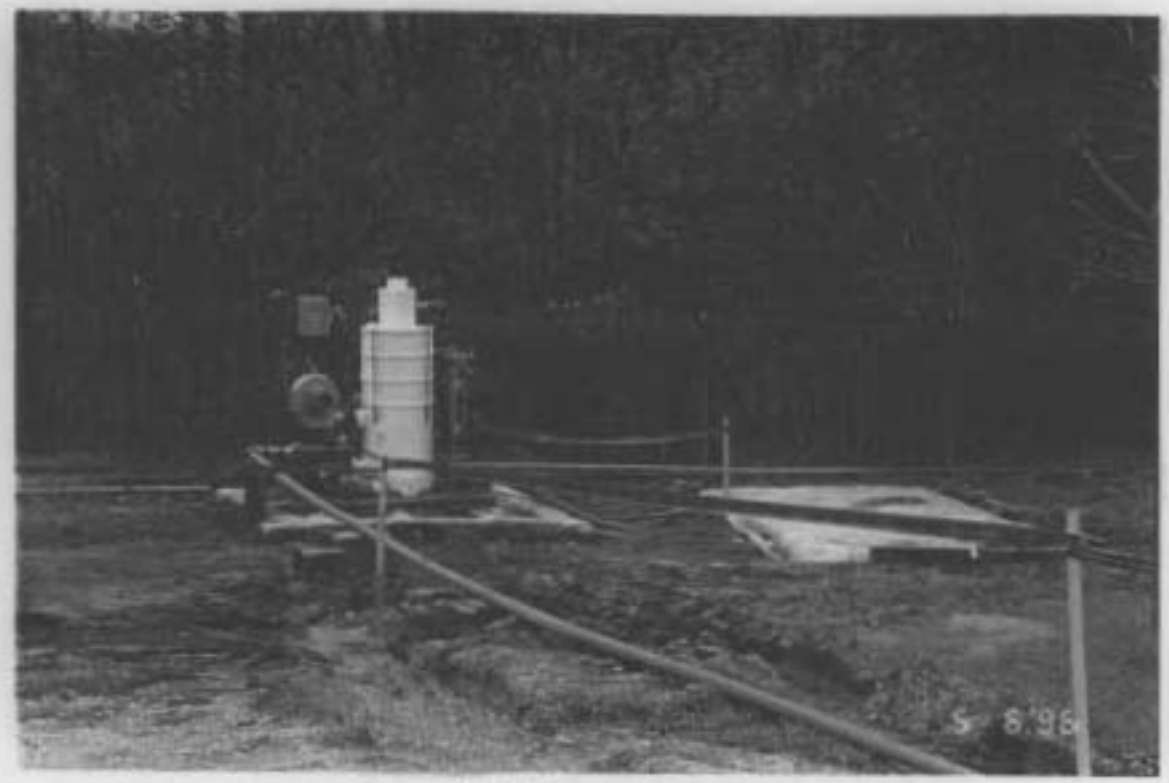

Roll 26, Frame 09, 5/6/96
West sump discharge to stripper and sump

Roll 26, Frame 11, 5/6/96
Stripper at the west sump

Roll 26, Frame 17, 6/17/96
East sump smoke test

Roll 26, Frame 18, 6/17/96
East sump smoke test

Roll 26, Frame 19, 6/17/96
East sump smoke test at Building 146 (east side)

Roll 26, Frame 20, 6/17/96
West sump smoke test

Roll 26, Frame 21, 6/17/96
West sump smoke test

Roll 26, Frame 22, 6/17/96
West sump smoke test at Building 146 (west side)

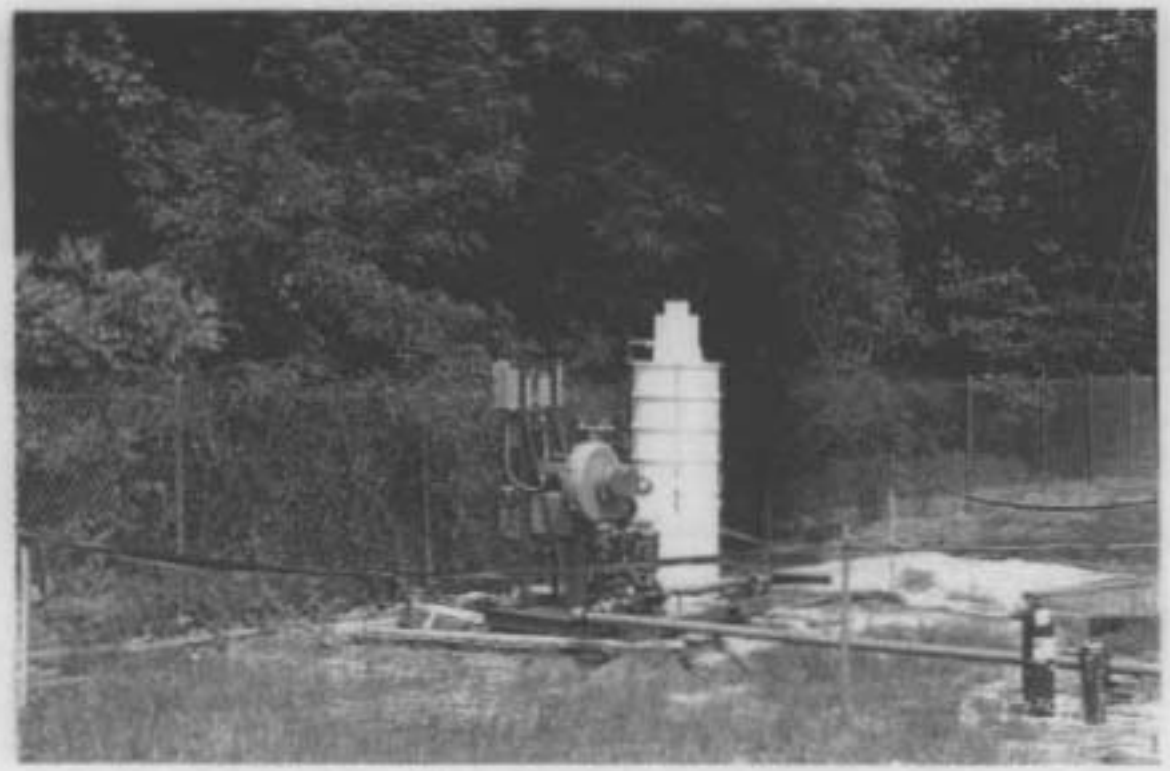

Roll 26, Frame 23, 6/17/96
New air stripper at west sump. Air stripper processed water from east and west sump

Roll 26, Frame 24, 6/17/96
New air stripper at west sump. Air stripper processed water from east and west sumps

Roll 26, Frame 25, 6/17/96
Sanitary sewer 70 feet east of west sump, smoke visible in sewer

Roll 28, Frame 15, 7/9/96
Excavation of sewer inlet piping to west sump

Roll 28, Frame 16, 7/9/96
Excavation of sewer and inlet piping to west sump

Roll 28, Frame 17, 7/9/96
Excavation of sewer inlet piping to west sump

Roll 28, Frame 18, 7/9/96
Further digging located broken sewer pipe

Roll 28, Frame 19, 7/9/96
Further digging located broken sewer pipe

Roll 28, Frame 20, 7/9/96
Sump and sewer pipe, sump pipe with 6 inch hole

Roll 28, Frame 22, 7/9/96
Damaged sewer pipeline

Roll 28, Frame 35, 7/11/96
Clamp on sewer pipe over inlet pipe to sump

Roll 28, Frame 36, 7/11/96
Grouting in the pipe; sanitary sewer

Roll 28, Frame 37, 7/12/96
Sewer pipe repair, ends grouted in, ready to backfill

APPENDIX D

SAMPLE ANALYSIS TABLES AND TCE LEVEL GRAPHS

APPENDIX D

TABLE OF CONTENTS

Table 1: Sample Collection Summary . . . . . 9 Pages
Table 2: Analytical Results Summary . . . . . 32 Pages
Table 3: Trip Blank Analytical Results Summary . . . . . 6 Pages
Table 4: Analytical Results Geoprobe Soil Samples . . . . . 6 Pages
Table 5: Analytical Results Summary - Excavated Soil . . . . . 1 Page
TCE Level Graph West Sump . . . . . 1 Page
TCE Level Graph West Sump vs East Sump . . . . . 1 Page
Drinking Water Standards and Health Advisories (TCE) . . . . . 1 Page
Additional Analytical Results for Samples Collected by NSWC Crane Personnel . . . . . 30 Pages

TABLE 1
SAMPLE COLLECTION SUMMARY

Lab Number	SiteID	Matrix	SampleDate	Sample Type	Method Requested
951214501	16/16-069	Water	12/19/95	Water from West Sump	OLM03.1
782358	16-16-082	Water	2/8/96	Sump Water Drum	OLM03.1
782359	16-16-083	Water	2/8/96	Rinse Water Drum	OLM03.1
782360	16-16-084	Water	2/8/96	Rinse Water Drum	OLM03.1
782361	16-16-079	Water	2/8/96	Sump Water Drum	OLM03.1
782362	16-16-080	Water	2/8/96	Sump Water Drum	OLM03.1
782363	16-16-081	Water	2/8/96	Sump Water Drum	OLM03.1
793493	16-16-085	Water	3/25/96	West Sump	SW 846(8010)
793498	16-16TB25	Trip Blank	3/25/96	Trip Blank	OLM03.1
796906	16-16-086	Water	4/11/96	Water from West Sump	SW 846(8010)
805214	16/WS01I	Water	5/28/96	West Sump Influent	OLM03.1
805219	16/WS01E	Water	5/28/96	West Sump Effluent	OLM03.1
805224	16/WSTB29	Trip Blank	5/28/96	Trip Blank	OLM03.1
805692	16WS02I	Water	5/29/96	West Sump Influent	OLM03.1
805697	16WS02E	Water	5/29/96	West Sump Effluent	OLM03.1
805698	16WSTB-30	Trip Blank	5/29/96	Trip Blank	OLM03.1
806008	16WS03E	Water	6/3/96	West Sump Effluent	OLM03.1
806013	16WS03I	Water	6/3/96	West Sump Influent	OLM03.1
806014	16WS04E	Water	6/3/96	West Sump Effluent	OLM03.1
806015	16WS04I	Water	6/3/96	West Sump Influent	OLM03.1
806016	TRIP BLANK	Trip Blank	6/3/96	Trip Blank	OLM03.1
806787	16WS05I	Water	6/7/96	West Sump Influent	OLM03.1
806793	16WS05E	Water	6/7/96	West Sump Effluent	OLM03.1
806794	16WS06I	Water	6/7/96	West Sump Influent	OLM03.1
806795	16WS06E	Water	6/7/96	West Sump Effluent	OLM03.1
806796	16WSTB31	Trip Blank	6/7/96	Trip Blank	OLM03.1
807054	16WS07E	Water	6/9/96	West Sump Effluent	OLM03.1
807059	16WS07I	Water	6/9/96	West Sump Influent	OLM03.1
807060	16WSTB-32	Trip Blank	6/9/96	Trip Blank	OLM03.1
807288	16FT01	Water	6/11/96	Fuel Tank	OLM03.1
807294	16WS08E	Water	6/11/96	West Sump Effluent	OLM03.1
807295	16WS08I	Water	6/11/96	West Sump Influent	OLM03.1
807296	16WS09E	Water	6/11/96	West Sump Effluent (East Water)	OLM03.1
807297	16WS09I	Water	6/11/96	West Sump Influent (East Water)	OLM03.1
807298	16WSTB33	Trip Blank	6/11/96	Trip Blank	OLM03.1
808034	16WSTB34	Trip Blank	6/17/96	Trip Blank	OLM03.1
808039	16WS10I	Water	6/17/96	West Sump Influent	OLM03.1
808040	16WS10E	Water	6/17/96	West Sump Effluent	OLM03.1
812149, 812144	16PC01	Soil	7/9/96	Sewer/Sump Inlet Crossover	OLM03.1, SW 846(6010)
812154	16WS11E	Water	7/7/96	West Sump Effluent	OLM03.1
812159	16WS12E	Water	7/8/96	East Sump pumped to W Sump	OLM03.1
812160	16WS11I	Water	7/7/96	West Sump Influent	OLM03.1
812161	16WS12I	Water	7/8/96	East Sump pumped to W Sump	OLM03.1
812162	16WSTB37	Trip Blank	7/9/96	Trip Blank	OLM03.1
814840	16/CS-014	Water	7/22/96	Center Sump	OLM03.1
814842	16/ES-013	Water	7/22/96	East Sump	OLM03.1
814846	16/16-TB38	Trip Blank	7/22/96	Trip Blank	OLM03.1
816965	16WS015I	Water	7/25/96	Stripper West Sump	OLM03.1

TABLE 1
SAMPLE COLLECTION SUMMARY

Lab Number	SiteID	Matrix	SampleDate	Sample Type	Method Requested
816974	16WS016I	Water-Duplicate	7/25/96	Stripper West Sump	OLM03.1
816975	16WS018I	Water	7/26/96	Stripper East Sump	OLM03.1
816978	16WSTB39	Trip Blank	7/26/96	Trip Blank	OLM03.1
816980	16WS15E	Water	7/26/96	Stripper West Sump	OLM03.1
816981	16WS16E	Water-Duplicate	7/26/96	Stripper West Sump	OLM03.1
816983	16WS18E	Water	7/26/96	Stripper East Sump	OLM03.1
816984	16WS17I	Water-New Filter	7/25/96	West Sump Influent	OLM03.1
816986	16WS17E	Water-New Filter	7/25/96	West Sump Effluent	OLM03.1
816988	16DW19	Water	7/26/96	Ditchwate S/W	OLM03.1
817154	16/WS-20	Water	7/31/96	SE Side Bldg 146	OLM03.1
817159	16/WS-21	Water	7/31/96	SE Side Bldg 146	OLM03.1
817160	16/WS-TB40	Trip Blank	7/31/96	Trip Blank	OLM03.1
823432	16/WS-22E	Water	9/9/96	West Sump Effluent	OLM03.1
823437	16/WS-22I	Water	9/9/96	West Sump Influent	OLM03.1
823438	16/ES-23	Water	9/9/96	East Sump	OLM03.1
823439	16/ES-24	Water-Duplicate	9/9/96	East Sump	OLM03.1
823440	16/WS-25E	Water	9/9/96	West Sump Effluent	OLM03.1
823441	16/WS-TB42	Trip Blank	9/9/96	Trip Blank	OLM03.1
825250	16/WS-26E	Water	9/16/96	West Sump Effluent	OLM03.1
825251	16/WS-26I	Water	9/16/96	West Sump Influent	OLM03.1
825252	16/ES-27	Water	9/16/96	East Sump	OLM03.1
825253	16/WS-28E	Water	9/17/96	West Sump Effluent	OLM03.1
825254	16/WS-TB43	Trip Blank	9/17/96	Trip Blank	OLM03.1
826348	16/WS-29I	Water	9/21/96	West Sump Influent	OLM03.1
826353	16/WS-29E	Water	9/21/96	West Sump Effluent	OLM03.1
826354	16/WS-TB44	Trip Blank	9/21/96	Trip Blank	OLM03.1
827523	16/WS-30I	Water	9/28/96	West Sump Effluent	OLM03.1
827522	16/WS-30E	Water	9/28/96	West Sump Effluent	OLM03.1
827524	16/WS-31I	Water	9/28/96	West Sump Effluent	OLM03.1
827525	16/WS-TB45	Trip Blank	9/28/96	Trip Blank	OLM03.1
829259	16/WS-32E	Water	10/22/96	West Sump Effluent	OLM03.1
829264	16/WS-32I	Water	10/22/96	West Sump Influent	OLM03.1
829265	16/ES-35	Water	10/22/96	East Sump	OLM03.1
829266	16/WS-TB46	Trip Blank	10/22/96	Trip Blank	OLM03.1
830762	16/WS-36I	Water	11/7/96	West Sump Influent	OLM03.1
830767	16/ES-37	Water	11/7/96	East Sump	OLM03.1
830768	16/WS-TB	Trip Blank	11/7/96	Trip Blank	OLM03.1
830807	16/WS-38E	Water	11/8/96	West Sump Effluent	OLM03.1
830813	16/WS-TB47	Trip Blank	11/8/96	Trip Blank	OLM03.1
831093	16/WS-39I	Water	11/12/96	West Sump Influent	OLM03.1
831098	16/WS-39E	Water	11/12/96	West Sump Effluent	OLM03.1
831099	16/WS-40E	Water-Duplicate	11/12/96	West Sump Effluent	OLM03.1
831100	16/WS-TB48	Trip Blank	11/12/96	Trip Blank	OLM03.1
832421	16/ES-41	Water	11/25/96	East Sump	OLM03.1
832426	16/WS-42I	Water	11/25/96	West Sump Influent	OLM03.1
832427	16/WS-42E	Water	11/25/96	West Sump Effluent	OLM03.1
832428	16/WS-43I	Water (meter)	11/25/96	West Sump Influent	OLM03.1
832429	16/WS-43E	Water (meter)	11/25/96	West Sump Effluent	OLM03.1

TABLE 1
SAMPLE COLLECTION SUMMARY

Lab Number	SiteID	Matrix	SampleDate	Sample Type	Method Requested
832430	16/WS-TB49	Trip Blank	11/25/96	Trip Blank	OLM03.1
833052	16/ES-44	Water	12/2/96	East Sump	OLM03.1
833057	16/WS-45I	Water	12/2/96	West Sump Influent	OLM03.1
833058	16/WS-45E	Water	12/2/96	West Sump Effluent	OLM03.1
833059	16/WS-TB50	Trip Blank	12/2/96	Trip Blank	OLM03.1
833494	16/ES-47	Water	12/6/96	East Sump	OLM03.1
833495	16/ES-48	Water-Duplicate	12/6/96	East Sump	OLM03.1
833496	16/WS-49E	Water	12/6/96	West Sump Effluent	OLM03.1
833497	16/WS-49I	Water	12/6/96	West Sump Influent	OLM03.1
833838	16/WS-TB51	Trip Blank	12/6/96	Trip Blank	OLM03.1
834298	16/ES-50	Water	12/12/96	East Sump	OLM03.1
834303	16/WS-51I	Water	12/12/96	West Sump Influent	OLM03.1
834304	16/WS-51E	Water	12/12/96	West Sump Effluent	OLM03.1
834305	16/WS-TB52	Trip Blank	12/12/96	Trip Blank	OLM03.1
834833	16/ES-52	Water	12/17/96	East Sump	OLM03.1
834834	16/WS-53I	Water	12/17/96	West Sump Influent	OLM03.1
834835	16/WS-54I	Water-Duplicate	12/17/96	West Sump Influent	OLM03.1
834836	16/WS-54E	Water	12/17/96	West Sump Effluent	OLM03.1
834837	16/WS-TB53	Trip Blank	12/17/96	Trip Blank	OLM03.1
834838	16/WS-55I	Water	12/18/96	West Sump Influent	OLM03.1
834839	16/WS-55E	Water	12/18/96	West Sump Effluent	OLM03.1
835593	16/WS-56E	Water	12/24/96	West Sump Effluent	OLM03.1
835598	16/WS-56I	Water	12/24/96	West Sump Influent	OLM03.1
835599	16/WS-57TT	Water	12/24/96	Trailer Tank	OLM03.1
835600	16/WS-58FT	Water	12/24/96	Frac Tank	OLM03.1
835601	16/ES-59	Water	12/24/96	East Sump	OLM03.1
835604	16/ES-60	Water	12/27/96	East Sump	OLM03.1
835605	16/ES-61TT	Water	12/27/96	Trailer Tank	OLM03.1
835606	16/WS-62FT	Water	12/27/96	Frac Tank	OLM03.1
835607	16/WS-63E	Water	12/27/96	West Sump Effluent	OLM03.1
835608	16/WS-63I	Water	12/27/96	West Sump Influent	OLM03.1
835609	16/WS-64I	Water-Duplicate	12/27/96	West Sump Influent	OLM03.1
835610	16/WS-TB55	Trip Blank	12/27/96	Trip Blank	OLM03.1
836370	16/WS-65I	Water	1/13/97	West Sump Influent	OLM03.1
836375	16/WS-65E1	Water	1/13/97	West Sump Effluent	OLM03.1
836376	16/WS-65E2	Water	1/14/97	West Sump Effluent	OLM03.1
836377	16/WS-TB56	Trip Blank	1/13/97	Trip Blank	OLM03.1
836506	16/WS-66I	Water	1/17/97	West Sump Influent	OLM03.1
836511	16/WS-66E	Water	1/17/97	West Sump Effluent	OLM03.1
836512	16/WS-TB57	Trip Blank	1/17/97	Trip Blank	OLM03.1
836641	16/ES-67	Water	1/21/97	East Sump	OLM03.1
836642	16/WS-68E	Water	1/21/97	West Sump Effluent	OLM03.1
836643	16/WS-69E	Water-Duplicate	1/21/97	West Sump Effluent	OLM03.1
836644	16/WS-TB58	Trip Blank	1/21/97	Trip Blank	OLM03.1
836724	16/ES-70	Water	1/22/97	East Sump	OLM03.1
836725	16/WS-71I	Water	1/22/97	West Sump Influent	OLM03.1
836726	16/WS-71E	Water	1/22/97	West Sump Effluent	OLM03.1
836727	16/WS-TB59	Trip Blank	1/22/97	Trip Blank	OLM03.1

TABLE 1
SAMPLE COLLECTION SUMMARY

Lab Number	SiteID	Matrix	SampleDate	Sample Type	Method Requested
836889	16/WS-72I	Water	1/22/97	West Sump Influent	OLM03.1
836890	16/WS-TB60	Trip Blank	1/22/97	Trip Blank	OLM03.1
837468	16/ES-73	Water	1/27/97	East Sump	OLM03.1
837473	16/WS-74I	Water	1/27/97	West Sump Influent	OLM03.1
837474	16/WS-74E	Water	1/27/97	West Sump Effluent	OLM03.1
837475	16/WS-TB80	Trip Blank	1/27/97	Trip Blank	OLM03.1
838396	16/ES-75	Water	2/4/97	East Sump	OLM03.1
838401	16/WS-76I	Water	2/4/97	West Sump Influent	OLM03.1
838402	16/WS-77I	Water	2/5/97	West Sump Influent	OLM03.1, SW846(8015)
838403	16/WS-77E	Water	2/5/97	West Sump Effluent	OLM03.1
838404	16/WS-78I	Water-Duplicate	2/5/97	West Sump Influent	OLM03.1
838405	16/WS-TB62	Trip Blank	2/4/97	Trip Blank	OLM03.1
841294	16/WS-TB63	Trip Blank	2/18/97	Trip Blank	OLM03.1
841295, 841293	16/WS-79I	Water	2/18/97	UST Pit Water	OLM03.1, SW846(8015)
842092	16/ES-80	Water	2/21/97	East Sump	OLM03.1
842093	16/WS-81I	Water	2/21/97	West Sump Influent	OLM03.1
842094	16/WS-82I	Water-Duplicate	2/21/97	West Sump Influent	OLM03.1
842095	16/WS-82E	Water	2/21/97	West Sump Effluent	OLM03.1
842096	16/WS-TB65	Trip Blank	2/21/97	Trip Blank	OLM03.1
842943	16/WS-83I	Water	2/27/97	West Sump Influent	OLM03.1
842948	16/WS-TB66	Trip Blank	2/27/97	Trip Blank	OLM03.1
	16/ES-84	Water	2/28/97	East Sump	Rejected
	16/WS-85I	Water	2/28/97	West Sump Influent	Rejected
	16/WS-85E	Water	2/28/97	West Sump Effluent	Rejected
	16/WS-86I	Water-Duplicate	2/28/97	West Sump Influent	Rejected
	16/WS-TB67	Trip Blank	2/28/97	Trip Blank	Rejected
844080	16/ES-87	Water	3/7/97	East Sump	OLM03.1
844085	16/WS-88I	Water	3/7/97	West Sump Influent	OLM03.1
844086	16/WS-88E	Water	3/7/97	West Sump Effluent	OLM03.1
844087	16/WS-TB68	Water	3/7/97	Trip Blank	OLM03.1
844942	16/WS-89E	Water	3/15/97	West Sump Effluent	OLM03.1
844947	16/WS-90E	Water	3/15/97	West Sump Effluent	OLM03.1
844948	16/WS-91E	Water	3/16/97	West Sump Effluent	OLM03.1
844949	16/WSTB69	Trip Blank	3/15/97	Trip Blank	OLM03.1
845072	16/ES-93	Water	3/18/97	East Sump	OLM03.1
845077	16/WS-92E	Water	3/18/97	West Sump Effluent	OLM03.1
845078	16/WSTB70	Trip Blank	3/18/97	Trip Blank	OLM03.1
845678	16/WS-93I	Water	3/25/97	West Sump Influent	OLM03.1
845686	16/WS-93E	Water	3/25/97	West Sump Effluent	OLM03.1
845687	16/WS-TB71	Trip Blank	2/26/97	Trip Blank	OLM03.1
846346	16/WS-94I	Water	3/28/97	West Sump Influent	OLM03.1
846351	16/WS-94E	Water	3/28/97	West Sump Effluent	OLM03.1
846352	16/WS-96E	Water-Duplicate	3/28/97	West Sump Effluent	OLM03.1
846353	16/WS-TB72	Trip Blank	3/28/97	Trip Blank	OLM03.1
846354	16/WS-TB74	Trip Blank	2/26/97	Trip Blank	OLM03.1
846355	16/ES-99	Water	3/30/97	East Sump	OLM03.1
846356	16/WS-100I	Water	3/30/97	West Sump Influent	OLM03.1
846357	16/WS-97I	Water	3/29/97	West Sump Influent	OLM03.1

TABLE 1
SAMPLE COLLECTION SUMMARY

Lab Number	SiteID	Matrix	SampleDate	Sample Type	Method Requested
846358	16/WS-97E	Water	3/29/97	West Sump Effluent	OLM03.1
846359	16/ES-98	Water	3/29/97	East Sump	OLM03.1
846360	16/WS-TB73	Trip Blank	2/26/97	Trip Blank	OLM03.1
846361	16/WS-101E	Water	3/30/97	Air Stripper Effluent	OLM03.1
846630	16/WS-RB01	Rinse Blank	4/1/97	Rinse from Decon	OLM03.1
846635	16/WS-FB01	Field Blank	4/1/97	Blank of Decon Water	OLM03.1
846636	16/WS-TB75	Trip Blank	4/1/97	Trip Blank	OLM03.1
847320	16/ES-102	Water	4/4/97	East Sump	OLM03.1
847325	16/WS-102I	Water	4/4/97	West Sump Influent	OLM03.1
847326	16/WS-102E	Water	4/4/97	West Sump Effluent	OLM03.1
847327	16/WS-TB76	Trip Blank	4/4/97	Trip Blank	OLM03.1
847357	1616B0104	Soil	4/4/97	Geoprobe Sample	OLMO3.1
847362	1616B0105	Soil	4/4/97	Geoprobe Sample	OLMO3.1
847363	1616B0204	Soil	4/4/97	Geoprobe Sample	OLMO3.1
847364	1616B0302	Soil	4/4/97	Geoprobe Sample	OLMO3.1
847365	1616B0402	Soil	4/4/97	Geoprobe Sample	OLMO3.1
847366	1616B0502	Soil	4/4/97	Geoprobe Sample	OLMO3.1
847367	1616B0503	Soil	4/4/97	Geoprobe Sample	OLMO3.1
847368	1616B0505	Soil	4/4/97	Geoprobe Sample	OLMO3.1
847369	1616B0602	Soil	4/4/97	Geoprobe Sample	OLMO3.1
847370	1616B0605	Soil	4/4/97	Geoprobe Sample	OLMO3.1
847371	1616B0704	Soil	4/4/97	Geoprobe Sample	OLMO3.1
847372	1616B0804	Soil	4/4/97	Geoprobe Sample	OLMO3.1
847373	1616B0904	Soil	4/4/97	Geoprobe Sample	OLMO3.1
847374	1616B1004	Soil	4/4/97	Geoprobe Sample	OLMO3.1
847375, 847379	1616B1005	Soil	4/4/97	Geoprobe Sample	OLMO3.1, SW8015
847380, 347381	1616B1104	Soil	4/4/97	Geoprobe Sample	OLMO3.1, SW8015
847382, 847383	1616B1106	Soil	4/4/97	Geoprobe Sample	OLMO3.1, SW8015
847384	1616B1202	Soil	4/4/97	Geoprobe Sample	OLMO3.1
848140	16/ES104	Water	4/12/97	East Sump	OLM03.1
848145	16/WS104I	Water	4/12/97	West Sump Influent	OLM03.1
848146	16/WS104E	Water	4/12/97	West Sump Effluent	OLM03.1
848147	16/WS-TB78	Trip Blank	4/12/97	Trip Blank	OLM03.1
848149	16/WS-103E	Water	4/11/97	West Sump Effluent	OLM03.1
848150	16/WS-103I	Water	4/11/97	West Sump Influent	OLM03.1
848151	16/ES-103	Water	4/11/97	East Sump	OLM03.1
848152	16/WS-TB77	Trip Blank	4/11/97	Trip Blank	OLM03.1
848832	16/ES-105	Water	4/16/97	East Sump	OLM03.1
848833	16/WS-106I	Water	4/16/97	West Sump Influent	OLM03.1
848835	16/WS-106E	Water	4/16/97	West Sump Effluent	OLM03.1
848837	16/WS-TB79	Trip Blank	4/16/97	Trip Blank	OLM03.1
849252	16-ES 107	Water	4/21/97	East Sump	OLM03.1
849257	16-WS 108I	Water	4/21/97	West Sump Influent	OLM03.1
849258	16-WS 109I	Water-Duplicate	4/21/97	West Sump Influent	OLM03.1
849259	16-WS 110E	Water	4/21/97	West Sump Effluent	OLM03.1
849260	16-TB80	Trip Blank	4/21/97	Trip Blank	OLM03.1
850578	16-ES111	Water	4/27/97	East Sump	OLM03.1
850583	16-WS112I	Water	4/27/97	West Sump Influent	OLM03.1

TABLE 1
SAMPLE COLLECTION SUMMARY

Lab Number	SiteID	Matrix	SampleDate	Sample Type	Method Requested
850584	16-WS112E	Water	4/27/97	West Sump Effluent	OLM03.1
850585	16-TB81	Trip Blank	4/27/97	Trip Blank	OLM03.1
850849	16-ES113	Water	4/30/97	East Sump	OLM03.1
850854	16-WS114I	Water	4/30/97	West Sump Influent	OLM03.1
850855	16-WS115I	Water-Duplicate	4/30/97	West Sump Influent	OLM03.1
850856	16-WS114E	Water	4/30/97	West Sump Effluent	OLM03.1
850857	16-TB82	Trip Blank	4/30/97	Trip Blank	OLM03.1
851139	16-ES116	Water	5/2/97	East Sump	OLM03.1
851144	16-WS116I	Water	5/2/97	West Sump Influent	OLM03.1
851145	16-WS116E	Water	5/2/97	West Sump Effluent	OLM03.1
851146	16-TB-83	Trip Blank	5/2/97	Trip Blank	OLM03.1
851147	16-ES117	Water	5/3/97	East Sump	OLM03.1
851148	16-WS117I	Water	5/3/97	West Sump Influent	OLM03.1
851149	16-WS117E	Water	5/3/97	West Sump Effluent	OLM03.1
851150	16-TB-84	Trip Blank	5/3/97	Trip Blank	OLM03.1
851469	16-WS118E	Water	5/5/97	West Sump Effluent	OLM03.1
851477	16-WS118I	Water	5/5/97	West Sump Influent	OLM03.1
851481	16-ES118	Water	5/5/97	East Sump	OLM03.1
851499	16-TB85	Trip Blank	5/5/97	Trip Blank	OLM03.1
851655	16-ES119	Water	5/8/97	East Sump	OLM03.1
851660	16-WS119E	Water	5/8/97	West Sump Effluent	OLM03.1
851661	16-WS119I	Water	5/8/97	West Sump Influent	OLM03.1
851662	16-TB86	Trip Blank	5/8/97	Trip Blank	OLM03.1
851914	16-ES120	Water	5/12/97	East Sump	OLM03.1
851919	16-WS121E	Water	5/12/97	West Sump Effluent	OLM03.1
851920	16-WS121I	Water	5/12/97	West Sump Influent	OLM03.1
851921	16-WS122E	Water-Duplicate	5/12/97	West Sump Effluent	OLM03.1
851927	16-TB87	Trip Blank	5/12/97	Trip Blank	OLM03.1
853127	16/TB-88	Trip Blank	5/17/97	Trip Blank	OLM03.1
853132	16/WS-123I	Water	5/17/97	West Sump Influent	OLM03.1
853133	16/WS-123E	Water	5/17/97	West Sump Effluent	OLM03.1
853134	16/ES-123	Water	5/17/97	East Sump	OLM03.1
854341	16/WS-124I	Water	5/25/97	West Sump Influent	OLM03.1
854346	16/WS-127E	Water	5/25/97	West Sump Effluent	OLM03.1
854347	16/ES-130	Water	5/25/97	East Sump	OLM03.1
854348	16/WS-134I	Water	5/25/97	West Sump Influent	OLM03.1
854349	16/WS-136E	Water	5/25/97	West Sump Effluent	OLM03.1
854350	16/TB92	Trip Blank	5/25/97	Trip Blank	OLM03.1
854351	16/WS-139IF	Water	5/25/97	West Sump Intake Flow	OLM03.1
854730	16/ES-143	Water	5/28/97	East Sump	OLM03.1
854737	16/TB93	Trip Blank	5/28/97	Trip Blank	OLM03.1
854738	16/WS-142E	Water	5/28/97	West Sump Effluent	OLM03.1
854739	16/WS-142I	Water	5/28/97	West Sump Influent	OLM03.1
855196	16/ES-144	Water	5/30/97	East Sump	OLM03.1
855206	16/WS-145I	Water	5/30/97	West Sump Influent	OLM03.1
855207	16/WS-145E	Water	5/30/97	West Sump Effluent	OLM03.1
855210	16/TB94	Trip Blank	5/30/97	Trip Blank	OLM03.1
855211	16/WS-146I	Water-Duplicate	5/30/97	West Sump Influent	OLM03.1

TABLE 1
SAMPLE COLLECTION SUMMARY

Lab Number	SiteID	Matrix	SampleDate	Sample Type	Method Requested
855217	16/ES-148	Water	5/31/97	East Sump	OLM03.1
855218	16/WS-147E	Water	5/31/97	West Sump Effluent	OLM03.1
855222	16/WS-147I	Water	5/31/97	West Sump Influent	OLM03.1
855233	16/TB95	Trip Blank	5/31/97	Trip Blank	OLM03.1
855234	16/WS-149I	Water	6/1/97	West Sump Influent	OLM03.1
855235	16/WS-149E	Water	6/1/97	West Sump Effluent	OLM03.1
855236	16/ES-150	Water	6/1/97	East Sump	OLM03.1
855237	16/TB-96	Trip Blank	6/1/97	Trip Blank	OLM03.1
855852	16/ES-151	Water	6/6/97	East Sump	OLM03.1
855857	16/WS-152I	Water	6/6/97	West Sump Influent	OLM03.1
855858	16/WS-152E	Water	6/6/97	West Sump Effluent	OLM03.1
855859	16/TB-97	Trip Blank	6/6/97	Trip Blank	OLM03.1
855860	16/ES-153	Water	6/7/97	East Sump	OLM03.1
855861	16/WS-154I	Water	6/7/97	West Sump Influent	OLM03.1
855862	16/WS-154E	Water	6/7/97	West Sump Effluent	OLM03.1
855863	16/TB-98	Trip Blank	6/7/97	Trip Blank	OLM03.1
855868	16/ES-156	Water	6/9/97	East Sump	OLM03.1
855869	16/WS-155I	Water	6/9/97	West Sump Influent	OLM03.1
855870	16/WS-155E	Water	6/9/97	West Sump Effluent	OLM03.1
855871	16/TB-99	Trip Blank	6/9/97	Trip Blank	OLM03.1
855936 & 855946	16/ES-157S	Sediment	6/10/97	East Sump	8015, OLM03.1, 7470, 6010
855941 & 855951	16/WS-158S	Sediment	6/10/97	West Sump	8015, OLM03.1, 7470, 6010
855945 & 855952	16/F-159S	Sediment	6/10/97	Frac Tank	8015, OLM03.1, 7470, 6010
856710	16/ES-164	Water	6/13/97	East Sump	OLM03.1
856715	16/WS-160I	Water	6/13/97	West Sump Influent	OLM03.1
856716	16/WS-162E	Water	6/13/97	West Sump Effluent	OLM03.1
856717	16/WS-161I	Water-Duplicate	6/13/97	West Sump Influent	OLM03.1
856718	16/WS-TB100	Trip Blank	6/13/97	Trip Blank	OLM03.1
856951	16/ES-165	Water	6/17/97	East Sump	OLM03.1
856956	16/WS-166I	Water	6/17/97	West Sump Influent	OLM03.1
856957	16/WS-167E	Water	6/17/97	West Sump Effluent	OLM03.1
856958	16/WS-TB101	Trip Blank	6/17/97	Trip Blank	OLM03.1
857348	16/ES-168	Water	6/18/97	East Sump	OLM03.1
857349	16/WS-169I	Water	6/18/97	West Sump Influent	OLM03.1
857350	16/WS-169E	Water	6/18/97	West Sump Effluent	OLM03.1
857361	16/TB-102	Trip Blank	6/18/97	Trip Blank	OLM03.1
857672	16/ES-175	Water	6/21/97	East Sump	OLM03.1
857677	16/WS-172I	Water	6/21/97	West Sump Influent	OLM03.1
857678	16/WS-174E	Water	6/21/97	West Sump Effluent	OLM03.1
857679	16/WS-173I	Water-Duplicate	6/21/97	West Sump Influent	OLM03.1
857680	16/TB103	Trip Blank	6/21/97	Trip Blank	OLM03.1
857681	16/ES-176	Water	6/22/97	East Sump	OLM03.1
857682	16/WS-177I	Water	6/22/97	West Sump Influent	OLM03.1
857683	16/WS-177E	Water	6/22/97	West Sump Effluent	OLM03.1
857684	16/TB104	Trip Blank	6/22/97	Trip Blank	OLM03.1
858433	16/ES-178	Water	6/26/97	East Sump	OLM03.1
858436	16/WS-179I	Water	6/26/97	West Sump Influent	OLM03.1
858437	16/WS-179E	Water	6/26/97	West Sump Effluent	OLM03.1

TABLE 1
SAMPLE COLLECTION SUMMARY

Lab Number	SiteID	Matrix	SampleDate	Sample Type	Method Requested
858438	16/TB-105	Trip Blank	6/26/97	Trip Blank	OLM03.1
858933	16/ES-178	Water	6/30/97	East Sump	OLM03.1
858938	16/WS-179I	Water	6/30/97	West Sump Influent	OLM03.1
858939	16/WS-179E	Water	6/30/97	West Sump Effluent	OLM03.1
858940	16/TB-105	Trip Blank	6/30/97	Trip Blank	OLM03.1
858941	16/WS-180I	Water-Duplicate	6/30/97	West Sump Influent	OLM03.1
861468	16-ES182	Water	7/14/97	East Sump	OLM03.1
861473	16-WS181I	Water	7/14/97	West Sump Influent	OLM03.1
861474	16-WS181E	Water	7/14/97	West Sump Effluent	OLM03.1
861475	16-TB106	Water	7/14/97	Trip Blank	OLM03.1
861811	16-ES183	Water	7/21/97	East Sump	OLM03.1
861816	16-WS184I	Water	7/21/97	West Sump Influent	OLM03.1
861819	16-WS184E	Water	7/21/97	West Sump Effluent	OLM03.1
861826	16-WS185I	Water-Duplicate	7/21/97	West Sump Influent	OLM03.1
864342	16-WSTB108	Trip Blank	8/8/97	Trip Blank	OLM03.1
864347	16-ES186	Water	8/8/97	East Sump	OLM03.1
864348	16-WS187E	Water	8/8/97	West Sump Effluent	OLM03.1
864349	16-WS187I	Water	8/8/97	West Sump Influent	OLM03.1
	16-ES 188	Water	8/9/97	East Sump	Rejected
	16-WS189I	Water	8/9/97	West Sump Influent	Rejected
	16-WS189E	Water	8/9/97	West Sump Effluent	Rejected
	16-TB109	Tip Blank	8/9/97	Trip Blank	Rejected
864350	16-TB110	Trip Blank	8/10/97	Trip Blank	OLM03.1
864351	16-ES190	Water	8/10/97	East Sump	OLM03.1
864352	16-WS191E	Water	8/10/97	West Sump Effluent	OLM03.1
864353	16-WS191I	Water	8/10/97	West Sump Influent	OLM03.1
864823	16-ES192	Water	8/12/97	East Sump	OLM03.1
864824	16-WS193I	Water	8/12/97	West Sump Influent	OLM03.1
864825	16-WS194I	Water-Duplicate	8/12/97	West Sump Influent	OLM03.1
864826	16-WS193E	Water	8/12/97	West Sump Effluent	OLM03.1
864827	16-TB111	Trip Blank	8/12/97	Trip Blank	OLM03.1
864828	16-ES195	Water	8/13/97	East Sump	OLM03.1
864829	16-WS196I	Water	8/13/97	West Sump Influent	OLM03.1
864830	16-WS197E	Water	8/13/97	West Sump Effluent	OLM03.1
864831	16-TB112	Trip Blank	8/13/97	Trip Blank	OLM03.1
865520	16-ES198	Water	8/15/97	East Sump	OLM03.1
865534	16-WS199I	Water	8/15/97	West Sump Influent	OLM03.1
865535	16-WS199E	Water	8/15/97	West Sump Effluent	OLM03.1
865536	16-TB113	Trip Blank	8/15/97	Trip Blank	OLM03.1
865537	16-ES200	Water	8/17/97	East Sump	OLM03.1
865538	16-WS201I	Water	8/17/97	West Sump Influent	OLM03.1
865539	16-WS201E	Water	8/17/97	West Sump Effluent	OLM03.1
865540	16-TB114	Trip Blank	8/17/97	Trip Blank	OLM03.1
	16-ES202	Water	8/19/97	East Sump	Rejected
	16-WS203I	Water	8/19/97	West Sump Influent	Rejected
	16-WS203E	Water	8/19/97	West Sump Effluent	Rejected
	16-TB115	Trip Blank	8/19/97	Trip Blank	Rejected
866559	16-ES204	Water	8/24/97	East Sump	OLM03.1

TABLE 1
SAMPLE COLLECTION SUMMARY

Lab Number	SiteID	Matrix	SampleDate	Sample Type	Method Requested
866560	16-WS205I	Water	8/24/97	West Sump Influent	OLM03.1
866561	16-WS205E	Water	8/24/97	West Sump Effluent	OLM03.1
866562	16-WSTB116	Trip Blank	8/24/97	Trip Blank	OLM03.1
867718	16-ES206	Water	9/9/97	East Sump	OLM03.1
867723	16-WS207I	Water	9/9/97	West Sump Influent	OLM03.1
867724	16-WS207E	Water	9/9/97	West Sump Effluent	OLM03.1
867725	16-TB117	Trip Blank	9/9/97	Trip Blank	OLM03.1
868593	16-ES209	Water	9/16/97	East Sump	OLM03.1
868598	16-WS208E	Water	9/16/97	West Sump Effluent	OLM03.1
868599	16-WS208I	Water	9/16/97	West Sump Influent	OLM03.1
868600	16-TB119	Trip Blank	9/16/97	Trip Blank	OLM03.1
870454	16-ES210	Water	9/23/97	East Sump	OLM03.1
870459	16-WS211I	Water	9/23/97	West Sump Influent	OLM03.1
870460	16-WS211E	Water	9/23/97	West Sump Effluent	OLM03.1
870461	16-WS212I	Water	9/23/97	West Sump Influent	OLM03.1
870462	16-TB119	Trip Blank	9/23/97	Trip Blank	OLM03.1
870463, 870469 870475, 870479 870484	16/WP01	Soil	9/24/97	Waste Pile - West side	E200.7, SW6010 SW8240, SW8330 SW8080
870468, 870474 870478, 870483 870487	16/WP02	Soil	9/24/97	Waste Pile - East side	E200.7, SW6010 SW8240, SW8330 SW8080

TABLE 2
ANALYTICAL RESULTS SUMMARY

Sample Date	Field ID	1,2-DICHLOROETHYLENE (cis & trans)	XYLENES	1,1,1,2-TETRACHLOROETHANE	1,1,1-TRICHLOROETHANE	1,1,2,2-TETRACHLOROETHANE	1,1,2-TRICHLOROETHANE	1,1-DICHLOROETHANE	1,1-DICHLOROETHENE	1,2,3-TRICHLOROPROPANE	1,2-DIBROMO-3-CHLOROPROPANE	1,2-DIBROMOETHANE	1,2-DICHLOROETHANE	1,2-DICHLOROPROPANE	1,4-DIOXANE	2-BUTANONE	2-HEXANONE
12/19/95	16/16-069	117	10 U	NA	7.8	5 U	4.9 J	5 U	5 U	NA	NA	5 U	NA	5 U	NA	100 U	50 U
2/8/96	16-16-079	50000 U	50000 U	50000 U	50000 U	50000 U	50000 U	50000 U	50000 U	50000 U	50000 U	50000 U	50000 U	50000 U	18000000 U	50000 U	50000 U
2/8/96	16-16-080	5000 U	5000 U	5000 U	5000 U	5000 U	5000 U	5000 U	5000 U	5000 U	5000 U	5000 U	5000 U	5000 U	1800000 U	5000 U	5000 U
2/8/96	16-16-081	6200 U	6200 U	6200 U	6200 U	6200 U	6200 U	6200 U	6200 U	6200 U	6200 U	6200 U	6200 U	6200 U	2300000 U	6200 U	6200 U
2/8/96	16-16-082	5000 U	1200 J	5000 U	5000 U	5000 U	5000 U	5000 U	5000 U	5000 U	5000 U	5000 U	5000 U	5000 U	1800000 U	5000 U	5000 U
2/8/96	16-16-083	50000 U	50000 U	50000 U	50000 U	50000 U	50000 U	50000 U	50000 U	50000 U	50000 U	50000 U	50000 U	50000 U	18000000 U	50000 U	50000 U
2/8/96	16-16-084	310 J	1000 U	1000 U	1000 U	1000 U	1400	1000 U	1000 U	1000 U	1000 U	1000 U	1000 U	1000 U	370000 U	1000 U	1000 U
3/28/96	16-16-085	10	10 U	NA	10 U	10 U	10 U	10 U	10 U	NA	NA	NA	10 U	10 U	NA	10 U	10 U
4/15/96	16-16086	67 U	67 U	NA	67 U	67 U	67 U	67 U	67 U	NA	NA	NA	67 U	67 U	NA	67 U	67 U
5/28/96	16-WS01E	10 U	10 U	10 U	10 U	10 U	10 U	10 U	10 U	10 U	10 U	10 U	10 U	10 U	10 U	10 U	10 U
5/28/96	16-WS01I	16	10 U	10 U	10 U	10 U	10 U	10 U	10 U	10 U	10 U	10 U	10 U	10 U	10 U	9.0 J	10 U
5/29/96	16WS02E	10 U	10 U	10 U	10 U	10 U	10 U	10 U	10 U	10 U	10 U	10 U	10 U	10 U	10 U	10 U	10 U
5/29/96	16WS02I	3.0 J	47	10 U	10 U	10 U	10 U	10 U	10 U	1.0 J	10 U	10 U	10 U	10 U	10 U	11	10 U
6/3/96	16WS03E	2.0 J	10 U	10 U	10 U	10 U	10 U	10 U	10 U	10 U	10 U	10 U	10 U	10 U	10 U	10 U	10 U
6/3/96	16WS03I	14	14 U	14 U	14 U	14 U	14 U	14 U	14 U	14 U	14 U	14 U	14 U	14 U	14 U	36	14 U
6/3/96	16WS04E	3.0 J	10 U	10 U	10 U	10 U	10 U	10 U	10 U	10 U	10 U	10 U	10 U	10 U	10 U	10 U	10 U
6/3/96	16WS04I	19	10 U	10 U	10 U	10 U	10 U	10 U	10 U	10 U	10 U	10 U	10 U	10 U	10 U	10 U	10 U
6/7/96	16WS05E	10 U	10 U	10 U	10 U	10 U	10 U	10 U	10 U	10 U	10 U	10 U	10 U	10 U	10 U	10 U	10 U
6/7/96	16WS05I	6.0 J	10 U	10 U	10 U	10 U	10 U	10 U	10 U	10 U	10 U	10 U	10 U	10 U	10 U	11	10 U
6/7/96	16WS06E	10 U	10 U	10 U	10 U	10 U	10 U	10 U	10 U	10 U	10 U	10 U	10 U	10 U	10 U	10 U	10 U
6/7/96	16WS06I	6.0 J	10 U	10 U	10 U	10 U	10 U	10 U	10 U	10 U	10 U	10 U	10 U	10 U	10 U	8.0 J	10 U
6/9/96	16WS07E	10 U	10 U	10 U	10 U	10 U	10 U	10 U	10 U	10 U	10 U	10 U	10 U	10 U	10 U	10 U	10 U
6/9/96	16WS07I	7.0 J	10 U	10 U	10 U	10 U	10 U	10 U	10 U	10 U	10 U	10 U	10 U	10 U	10 U	7.0 J	10 U
6/11/96	16FT01	240000 U	950000	240000 U	240000 U	240000 U	240000 U	240000 U	240000 U	240000 U	240000 U	240000 U	240000 U	240000 U	240000 U	240000 U	240000 U
6/11/96	16FT02	160000 U	890000	160000 U	160000 U	160000 U	160000 U	160000 U	160000 U	160000 U	160000 U	160000 U	160000 U	160000 U	160000 U	160000 U	160000 U
6/11/96	16WS08E	10 U	10 U	10 U	10 U	10 U	10 U	10 U	10 U	10 U	10 U	10 U	10 U	10 U	10 U	10 U	10 U
6/11/96	16WS08I	6.0 J	10 U	10 U	10 U	10 U	10 U	10 U	10 U	10 U	10 U	10 U	10 U	10 U	10 U	6.0 J	10 U
6/11/96	16WS09E	10 U	10 U	10 U	10 U	10 U	10 U	10 U	10 U	10 U	10 U	10 U	10 U	10 U	10 U	10 U	10 U
6/11/96	16WS09I	19	10 U	10 U	10 U	10 U	10 U	10 U	10 U	10 U	10 U	10 U	10 U	10 U	10 U	10 U	10 U
6/17/96	16WS10E	10 U	10 U	10 U	10 U	10 U	10 U	10 U	10 U	10 U	10 U	10 U	10 U	10 U	10 U	96	10 U
6/17/96	16WS10I	180	110 U	110 U	110 U	110 U	110 U	110 U	110 U	110 U	110 U	110 U	110 U	110 U	110 U	110 U	110 U
7/7/96	16WS11E	13	10 U	10 U	10 U	10 U	10 U	10 U	10 U	10 U	10 U	10 U	10 U	10 U	10 U	10 U	10 U
7/7/96	16WS11I	110	10 U	10 U	10 U	10 U	10 U	10 U	10 U	10 U	10 U	10 U	10 U	10 U	10 U	10 U	10 U
7/8/96	16WS12E	10 U	10 U	10 U	1.0 J	10 U	10 U	10 U	10 U	10 U	10 U	10 U	10 U	10 U	10 U	10 U	10 U
7/8/96	16WS12I	41	10 U	10 U	10 U	10 U	10 U	10 U	10 U	10 U	10 U	10 U	10 U	10 U	10 U	10 U	10 U
7/9/96	16PC-01	12 U	12 U	12 U	12 U	12 U	12 U	12 U	12 U	12 U	12 U	12 U	12 U	12 U	12 U	12 U	12 U
7/22/96	16CS-014	10 U	9.0 J	10 U	10 U	10 U	10 U	10 U	10 U	10 U	10 U	10 U	10 U	10 U	3700 U	10 U	10 U
7/22/96	16ES-013	22	10 U	10 U	10 U	10 U	10 U	10 U	1.0 J	10 U	10 U	10 U	10 U	10 U	3700 U	10 U	10 U
7/25/96	16WS015I	17	10 U	10 U	10 U	10 U	10 U	10 U	10 U	10 U	10 U	10 U	10 U	10 U	3700 U	10 U	10 U

TABLE 2
ANALYTICAL RESULTS SUMMARY

Sample Date	Field ID	ALLYL CHLORIDE	4-METHYL-2-PENTANONE	ACETONE	ACETONITRILE	ACROLEIN	ACRYLONITRILE	BENZENE	BROMODICHLOROMETHANE	BROMOFORM	BROMOMETHANE	CARBON DISULFIDE	CARBON TETRACHLORIDE	CHLOROBENZENE	CHLOROETHANE	CHLOROFORM	CHLOROMETHANE
12/19/95	16/16-069	NA	50 U	100 U	NA	NA	NA	5 U	5 U	5 U	10 U	5 U	5 U	5 U	10 U	5 U	10 U
2/8/96	16-16-079	75000 U	50000 U	50000 U	300000 U	450000 U	480000 U	50000 U	50000 U	50000 U	50000 U	50000 U	50000 U	50000 U	50000 U	50000 U	50000 U
2/8/96	16-16-080	7500 U	5000 U	5000 U	30000 U	45000 U	48000 U	5000 U	5000 U	5000 U	5000 U	5000 U	5000 U	5000 U	5000 U	5000 U	5000 U
2/8/96	16-16-081	9400 U	6200 U	6200 U	38000 U	56000 U	59000 U	6200 U	6200 U	6200 U	6200 U	6200 U	6200 U	6200 U	6200 U	6200 U	6200 U
2/8/96	16-16-082	7500 U	5000 U	5000 U	30000 U	45000 U	48000 U	5000 U	5000 U	5000 U	5000 U	5000 U	5000 U	5000 U	5000 U	5000 U	5000 U
2/8/96	16-16-083	75000 U	50000 U	50000 U	300000 U	450000 U	480000 U	50000 U	50000 U	50000 U	50000 U	50000 U	50000 U	50000 U	50000 U	50000 U	50000 U
2/8/96	16-16-084	1500 U	1000 U	1000 U	6000 U	9000 U	9500 U	1000 U	1000 U	1000 U	1000 U	1000 U	1000 U	1000 U	1000 U	1000 U	1000 U
3/28/96	16-16-085	NA	10 U	10 U	NA	NA	NA	10 U	10 U	10 U	10 U	10 U	10 U	10 U	10 U	10 U	10 U
4/15/96	16-16086	NA	67 U	67 U	NA	NA	NA	67 U	67 U	67 U	67 U	67 U	67 U	67 U	67 U	67 U	67 U
5/28/96	16-WS01E	10 U	10 U	8.0 J	10 U	10 U	10 U	10 U	10 U	10 U	10 U	10 U	10 U	10 U	10 U	10 U	10 U
5/28/96	16-WS01I	10 U	10 U	5.0 J	10 U	10 U	10 U	10 U	10 U	10 U	10 U	10 U	10 U	10 U	10 U	10 U	10 U
5/29/96	16WS02E	10 U	10 U	8.0 J	10 U	10 U	10 U	10 U	10 U	10 U	10 U	10 U	10 U	10 U	10 U	10 U	10 U
5/29/96	16WS02I	10 U	10 U	13	10 U	10 U	10 U	10 U	10 U	10 U	10 U	10 U	10 U	10 U	10 U	10 U	10 U
6/3/96	16WS03E	10 U	10 U	2.0 J	10 U	10 U	10 U	10 U	10 U	10 U	10 U	10 U	10 U	10 U	10 U	10 U	10 U
6/3/96	16WS03I	14 U	14 U	4.0 J	14 U	14 U	14 U	14 U	14 U	14 U	14 U	14 U	14 U	14 U	14 U	14 U	14 U
6/3/96	16WS04E	10 U	10 U	5.0 J	10 U	10 U	10 U	10 U	10 U	10 U	10 U	10 U	10 U	10 U	10 U	10 U	10 U
6/3/96	16WS04I	10 U	10 U	7.0 J	10 U	10 U	10 U	10 U	10 U	10 U	10 U	10 U	10 U	10 U	10 U	10 U	10 U
6/7/96	16WS05E	10 U	10 U	4.0 JB	10 U	10 U	10 U	10 U	10 U	10 U	10 U	10 U	10 U	10 U	10 U	10 U	10 U
6/7/96	16WS05I	10 U	10 U	6.0 JB	10 U	10 U	10 U	10 U	10 U	10 U	10 U	10 U	10 U	10 U	10 U	10 U	10 U
6/7/96	16WS06E	10 U	10 U	10 U	10 U	10 U	10 U	10 U	10 U	10 U	10 U	10 U	10 U	10 U	10 U	10 U	10 U
6/7/96	16WS06I	10 U	10 U	3.0 JB	10 U	10 U	10 U	10 U	10 U	10 U	10 U	10 U	10 U	10 U	10 U	10 U	10 U
6/9/96	16WS07E	10 U	10 U	10	10 U	10 U	10 U	10 U	10 U	10 U	10 U	10 U	10 U	10 U	10 U	10 U	10 U
6/9/96	16WS07I	10 U	10 U	8.0 J	10 U	10 U	10 U	10 U	10 U	10 U	10 U	10 U	10 U	10 U	10 U	10 U	10 U
6/11/96	16FT01	240000 U	240000 U	64000 JB	86000 J	240000 U	240000 U	45000 J	240000 U	240000 U	240000 U	240000 U	240000 U	240000 U	240000 U	240000 U	240000 U
6/11/96	16FT02	160000 U	160000 U	50000 JB	160000 U	160000 U	160000 U	37000 J	160000 U	160000 U	160000 U	160000 U	160000 U	160000 U	160000 U	160000 U	160000 U
6/11/96	16WS08E	10 U	10 U	7.0 J	10 U	10 U	10 U	10 U	10 U	10 U	10 U	10 U	10 U	10 U	10 U	10 U	10 U
6/11/96	16WS08I	10 U	10 U	5.0 J	10 U	10 U	10 U	10 U	10 U	10 U	10 U	10 U	10 U	10 U	10 U	10 U	2.0 J
6/11/96	16WS09E	10 U	10 U	10	10 U	10 U	10 U	10 U	10 U	10 U	10 U	10 U	10 U	10 U	10 U	10 U	10 U
6/11/96	16WS09I	10 U	10 U	9.0 J	10 U	10 U	10 U	10 U	10 U	10 U	10 U	10 U	10 U	10 U	10 U	10 U	2.0 J
6/17/96	16WS10E	10 U	10 U	9.0 JB	10 U	10 U	10 U	10 U	10 U	10 U	10 U	10 U	10 U	10 U	10 U	10 U	10 U
6/17/96	16WS10I	110 U	110 U	70 JB	110 U	110 U	110 U	110 U	110 U	110 U	110 U	110 U	110 U	110 U	110 U	110 U	110 U
7/7/96	16WS11E	10 U	10 U	15	10 U	10 U	10 U	10 U	10 U	10 U	10 U	10 U	10 U	10 U	10 U	10 U	10 U
7/7/96	16WS11I	10 U	10 U	13	10 U	10 U	10 U	10 U	10 U	10 U	10 U	10 U	10 U	10 U	10 U	10 U	10 U
7/8/96	16WS12E	10 U	10 U	12	10 U	10 U	10 U	10 U	10 U	10 U	10 U	10 U	10 U	10 U	10 U	10 U	10 U
7/8/96	16WS12I	10 U	10 U	13	10 U	10 U	10 U	10 U	10 U	10 U	10 U	10 U	10 U	10 U	10 U	10 U	10 U
7/9/96	16PC-01	12 U	12 U	11 JB	29 B	12 U	12 U	12 U	12 U	12 U	12 U	12 U	12 U	12 U	12 U	12 U	12 U
7/22/96	16CS-014	15 U	10 U	7.0 J	60 U	90 U	95 U	10 U	10 U	10 U	10 U	10 U	10 U	10 U	10 U	10 U	10 U
7/22/96	16ES-013	15 U	10 U	5.0 J	60 U	90 U	95 U	10 U	10 U	10 U	10 U	10 U	10 U	10 U	10 U	10 U	2.0 J
7/25/96	16WS015I	15 U	10 U	8.0 JB	60 U	90 U	95 U	10 U	10 U	10 U	10 U	10 U	10 U	10 U	10 U	10 U	10 U

TABLE 2
ANALYTICAL RESULTS SUMMARY

Sample Date	Field ID	CIS-1,3-DICHLOROPROPENE	DIBROMOCHLOROMETHANE	DIBROMOMETHANE	DICHLORODIFLUOROMETHANE	ETHYL METHACRYLATE	ETHYLBENZENE	IODOMETHANE	ISOBUTANOL	2-METHYL-2-PROPENENITRILE	METHYL METHACRYLATE	METHYLENE CHLORIDE	PROPIONITRILE	STYRENE	TETRACHLOROETHENE	TOLUENE
12/19/95	16/16-069	5 U	5 U	NA	NA	NA	5 U	NA	NA	NA	NA	5.0 U	NA	5 U	5 U	5 U
2/8/96	16-16-079	50000 U	50000 U	50000 U	50000 U	50000 U	50000 U	25000 U	14000000 U	100000 U	100000 U	50000 U	1100000 U	50000 U	50000 U	50000 U
2/8/96	16-16-080	5000 U	5000 U	5000 U	5000 U	5000 U	5000 U	2500 U	1400000 U	10000 U	10000 U	5000 U	110000 U	5000 U	5000 U	5000 U
2/8/96	16-16-081	6200 U	6200 U	6200 U	6200 U	6200 U	6200 U	3100 U	1800000 U	12000 U	12000 U	820 JB	140000 U	6200 U	6200 U	6200 U
2/8/96	16-16-082	5000 U	5000 U	5000 U	5000 U	5000 U	5000 U	2500 U	1400000 U	10000 U	10000 U	5000 U	110000 U	5000 U	5000 U	3600 J
2/8/96	16-16-083	50000 U	50000 U	50000 U	50000 U	50000 U	50000 U	25000 U	14000000 U	100000 U	100000 U	8200 JB	1100000 U	50000 U	50000 U	50000 U
2/8/96	16-16-084	1000 U	1000 U	1000 U	1000 U	1000 U	1000 U	500 U	280000 U	2000 U	2000 U	1000 U	22000 U	1000 U	1000 U	260 J
3/28/96	16-16-085	10 U	10 U	NA	NA	NA	10 U	NA	NA	NA	NA	10 U	NA	10 U	10 U	10 U
4/15/96	16-16086	67 U	67 U	NA	NA	NA	67 U	NA	NA	NA	NA	8.0 JB	NA	67 U	67 U	67 U
5/28/96	16-WS01E	10 U	10 U	10 U	10 U	NA	10 U	10 U	79	10 U	10 U	10 U	10 U	10 U	10 U	10 U
5/28/96	16-WS01I	10 U	10 U	10 U	10 U	NA	10 U	10 U	10 U	10 U	10 U	10 U	10 U	10 U	10 U	10 U
5/29/96	16WS02E	10 U	10 U	10 U	10 U	NA	10 U	10 U	10 U	10 U	10 U	10 U	10 U	10 U	10 U	10 U
5/29/96	16WS02I	10 U	10 U	10 U	10 U	NA	8.0 J	10 U	16	10 U	10 U	10 U	10 U	1.0 J	10 U	10 U
6/3/96	16WS03E	10 U	10 U	10 U	10 U	NA	10 U	10 U	10 U	10 U	10 U	10 U	10 U	10 U	10 U	10 U
6/3/96	16WS03I	14 U	14 U	14 U	14 U	NA	14 U	14 U	14 U	14 U	14 U	14 U	14 U	14 U	14 U	14 U
6/3/96	16WS04E	10 U	10 U	10 U	10 U	NA	10 U	10 U	10 U	10 U	10 U	10 U	10 U	10 U	10 U	10 U
6/3/96	16WS04I	10 U	10 U	10 U	10 U	NA	10 U	10 U	10 U	10 U	10 U	10 U	10 U	10 U	10 U	10 U
6/7/96	16WS05E	10 U	10 U	10 U	10 U	NA	10 U	10 U	10 U	10 U	10 U	3.0 JB	10 U	10 U	10 U	10 U
6/7/96	16WS05I	10 U	10 U	10 U	10 U	NA	10 U	10 U	10 U	10 U	10 U	2.0 JB	10 U	10 U	10 U	10 U
6/7/96	16WS06E	10 U	10 U	10 U	10 U	NA	10 U	10 U	10 U	10 U	10 U	3.0 JB	10 U	10 U	10 U	10 U
6/7/96	16WS06I	10 U	10 U	10 U	10 U	NA	10 U	10 U	10 U	10 U	10 U	2.0 JB	10 U	10 U	10 U	10 U
6/9/96	16WS07E	10 U	10 U	10 U	10 U	NA	10 U	10 U	10 U	10 U	10 U	2.0 JB	10 U	10 U	10 U	10 U
6/9/96	16WS07I	10 U	10 U	10 U	10 U	NA	10 U	10 U	10 U	10 U	10 U	2.0 JB	10 U	10 U	10 U	10 U
6/11/96	16FT01	240000 U	240000 U	240000 U	240000 U	NA	170000 J	240000 U	240000 U	240000 U	240000 U	31000 JB	240000 U	240000 U	240000 U	260000
6/11/96	16FT02	160000 U	160000 U	160000 U	160000 U	NA	170000	160000 U	160000 U	160000 U	160000 U	23000 JB	160000 U	160000 U	160000 U	260000
6/11/96	16WS08E	10 U	10 U	10 U	10 U	NA	10 U	10 U	10 U	10 U	10 U	10 U	10 U	10 U	10 U	10 U
6/11/96	16WS08I	10 U	10 U	10 U	10 U	NA	10 U	10 U	10 U	10 U	10 U	10 U	10 U	10 U	10 U	10 U
6/11/96	16WS09E	10 U	10 U	10 U	10 U	NA	10 U	10 U	10 U	10 U	10 U	10 U	10 U	10 U	10 U	10 U
6/11/96	16WS09I	10 U	10 U	10 U	10 U	NA	10 U	10 U	10 U	10 U	10 U	10 U	10 U	10 U	10 U	10 U
6/17/96	16WS10E	10 U	10 U	10 U	10 U	NA	10 U	10 U	10 U	10 U	10 U	10 U	10 U	10 U	10 U	10 U
6/17/96	16WS10I	110 U	110 U	110 U	110 U	NA	110 U	110 U	110 U	110 U	110 U	110 U	110 U	110 U	110 U	110 U
7/7/96	16WS11E	10 U	10 U	10 U	10 U	NA	10 U	10 U	10 U	10 U	10 U	10 U	10 U	10 U	10 U	10 U
7/7/96	16WS11I	10 U	10 U	10 U	10 U	NA	10 U	10 U	10 U	10 U	10 U	6.0 JB	10 U	10 U	10 U	10 U
7/8/96	16WS12E	10 U	10 U	10 U	10 U	NA	10 U	10 U	10 U	10 U	10 U	7.0 JB	10 U	10 U	10 U	10 U
7/8/96	16WS12I	10 U	10 U	10 U	10 U	NA	10 U	10 U	10 U	10 U	10 U	10 B	10 U	10 U	10 U	1.0 J
7/9/96	16PC-01	12 U	12 U	12 U	12 U	NA	12 U	12 U	12 U	12 U	12 U	26 B	12 U	12 U	12 U	12 U
7/22/96	16CS-014	10 U	10 U	10 U	10 U	NA	1.0 J	5.0 U	2800 U	20 U	20 U	2.0 JB	220 U	10 U	10 U	3.0 J
7/22/96	16ES-013	10 U	10 U	10 U	10 U	NA	10 U	5.0 U	2800 U	20 U	20 U	2.0 JB	220 U	10 U	10 U	10 U
7/25/96	16WS015I	10 U	10 U	10 U	10 U	NA	10 U	5.0 U	2800 U	20 U	20 U	3.0 JB	220 U	10 U	10 U	10 U

TABLE 2
ANALYTICAL RESULTS SUMMARY

Sample Date	Field ID	TRANS-1,3-DICHLOROPROPENE	TRANS-1,4-DICHLORO-2-BUTENE	TRICHLOROETHENE	TRICHLOROFLUOROMETHANE	VINYL ACETATE	VINYL CHLORIDE
12/19/95	16/16-069	5 U	NA	5100 D	NA	50 U	6.9 J
2/8/96	16-16-079	50000 U	50000 U	860000	50000 U	50000 U	50000 U
2/8/96	16-16-080	5000 U	5000 U	63000	5000 U	5000 U	5000 U
2/8/96	16-16-081	6200 U	6200 U	82000	6200 U	6200 U	6200 U
2/8/96	16-16-082	5000 U	5000 U	210000 D	5000 U	5000 U	5000 U
2/8/96	16-16-083	50000 U	50000 U	770000	50000 U	50000 U	50000 U
2/8/96	16-16-084	1000 U	1000 U	750000 D	1000 U	1000 U	1000 U
3/28/96	16-16-085	10 U	NA	51	NA	NA	10 U
4/15/96	16-16086	67 U	NA	1200	NA	NA	67 U
5/28/96	16-WS01E	10 U	10 U	10 U	10 U	10 U	10 U
5/28/96	16-WS01I	10 U	10 U	150	10 U	10 U	10 U
5/29/96	16WS02E	10 U	10 U	10 U	10 U	10 U	10 U
5/29/96	16WS02I	10 U	10	73	10 U	10 U	10 U
6/3/96	16WS03E	10 U	10 U	11	10 U	10 U	10 U
6/3/96	16WS03I	14 U	14 U	200	14 U	14 U	14 U
6/3/96	16WS04E	10 U	10 U	16	10 U	10 U	10 U
6/3/96	16WS04I	10 U	10 U	190	10 U	10 U	10 U
6/7/96	16WS05E	10 U	10 U	3.0 J	10 U	10 U	10 U
6/7/96	16WS05I	10 U	10 U	44	10 U	10 U	10 U
6/7/96	16WS06E	10 U	10 U	4.0 J	10 U	10 U	10 U
6/7/96	16WS06I	10 U	10 U	56	10 U	10 U	10 U
6/9/96	16WS07E	10 U	10 U	1.0 J	10 U	10 U	10 U
6/9/96	16WS07I	10 U	10 U	92	10 U	10 U	10 U
6/11/96	16FT01	240000 U	240000 U	240000 U	240000 U	240000 U	240000 U
6/11/96	16FT02	160000 U	160000 U	160000 U	160000 U	160000 U	160000 U
6/11/96	16WS08E	10 U	10 U	3.0 J	10 U	10 U	10 U
6/11/96	16WS08I	10 U	10 U	47	10 U	10 U	10 U
6/11/96	16WS09E	10 U	10 U	10 U	10 U	10 U	10 U
6/11/96	16WS09I	10 U	10 U	37	10 U	10 U	4.0 J
6/17/96	16WS10E	10 U	10 U	2.0 J	10 U	10 U	10 U
6/17/96	16WS10I	110 U	110 U	2000	110 U	110 U	110 U
7/7/96	16WS11E	10 U	10 U	10	10 U	10 U	10 U
7/7/96	16WS11I	10 U	10 U	130	10 U	10 U	10 U
7/8/96	16WS12E	10 U	10 U	10 U	10 U	10 U	10 U
7/8/96	16WS12I	10 U	10 U	81	10 U	10 U	10 U
7/9/96	16PC-01	12 U	12 U	2.0 J	12 U	12 U	12 U
7/22/96	16CS-014	10 U	10 U	10 U	10 U	10 U	10 U
7/22/96	16ES-013	10 U	10 U	31	10 U	10 U	5.0 J
7/25/96	16WS015I	10 U	10 U	32	10 U	10 U	10 U

TABL
ANALYTICAL RESULTS SUMMARY

Sample Date	Field ID	1,2-DICHLOROETHYLENE (cis & trans)	XYLENES	1,1,1,2-TETRACHLOROETHANE	1,1,1-TRICHLOROETHANE	1,1,2,2-TETRACHLOROETHANE	1,1,2-TRICHLOROETHANE	1,1-DICHLOROETHANE	1,1-DICHLOROETHENE	1,2,3-TRICHLOROPROPANE	1,2-DIBROMO-3-CHLOROPROPANE	1,2-DIBROMOETHANE	1,2-DICHLOROETHANE	1,2-DICHLOROPROPANE	1,4-DIOXANE	2-BUTANONE	2-HEXANONE
7/25/96	16WS016I	17	10 U	10 U	10 U	10 U	10 U	10 U	10 U	10 U	10 U	10 U	10 U	10 U	3700 U	10 U	10 U
7/25/96	16WS018I	18	10 U	10 U	10 U	10 U	10 U	10 U	10 U	10 U	10 U	10 U	10 U	10 U	3700 U	10 U	10 U
7/25/96	16WS15E	1.0 J	10 U	10 U	10 U	10 U	10 U	10 U	10 U	10 U	10 U	10 U	10 U	10 U	3700 U	10 U	10 U
7/25/96	16WS16E	1.0 J	10 U	10 U	10 U	10 U	10 U	10 U	10 U	10 U	10 U	10 U	10 U	10 U	3700 U	10 U	10 U
7/26/96	16DW19	10 U	10 U	10 U	10 U	10 U	10 U	10 U	10 U	10 U	10 U	10 U	10 U	10 U	3700 U	10 U	10 U
7/26/96	16WS17E	3.0 J	10 U	10 U	10 U	10 U	10 U	10 U	10 U	10 U	10 U	10 U	10 U	10 U	3700 U	10 U	10 U
7/26/96	16WS17I	21	10 U	10 U	10 U	10 U	10 U	10 U	10 U	10 U	10 U	10 U	10 U	10 U	3700 U	10 U	10 U
7/26/96	16WS18E	10 U	10 U	10 U	10 U	10 U	10 U	10 U	10 U	10 U	10 U	10 U	10 U	10 U	3700 U	10 U	10 U
7/31/96	16WS20	10 U	10 U	10 U	10 U	10 U	10 U	10 U	10 U	10 U	10 U	10 U	10 U	10 U	3700 U	10 U	10 U
7/31/96	16WS21	10 U	10 U	10 U	10 U	10 U	10 U	10 U	10 U	10 U	10 U	10 U	10 U	10 U	3700 U	10 U	10 U
9/9/96	16ES-23	10 U	10 U	10 U	10 U	10 U	10 U	10 U	10 U	10 U	10 U	10 U	10 U	10 U	10 U	10 U	10 U
9/9/96	16ES-24	10 U	10 U	10 U	10 U	10 U	10 U	10 U	10 U	10 U	10 U	10 U	10 U	10 U	10 U	10 U	10 U
9/9/96	16WS-22E	6.0 J	10 U	10 U	10 U	10 U	10 U	10 U	10 U	10 U	10 U	10 U	10 U	10 U	10 U	10 U	10 U
9/9/96	16WS-22I	33	10 U	10 U	10 U	10 U	10 U	10 U	10 U	10 U	10 U	10 U	10 U	10 U	10 U	10 U	10 U
9/9/96	16WS-25E	2.0 J	10 U	10 U	10 U	10 U	10 U	10 U	10 U	10 U	10 U	10 U	10 U	10 U	10 U	10 U	10 U
9/12/96	16WS-28E	10 U	10 U	10 U	10 U	10 U	10 U	10 U	10 U	10 U	10 U	10 U	10 U	10 U	3700 U	10 U	10 U
9/16/96	16WS-26E	1.0 J	10 U	10 U	10 U	10 U	10 U	10 U	10 U	10 U	10 U	10 U	10 U	10 U	3700 U	10 U	10 U
9/16/96	16WS-26I	10	10 U	10 U	10 U	10 U	10 U	10 U	10 U	10 U	10 U	10 U	10 U	10 U	3700 U	10 U	10 U
9/16/96	16ES-27	2.0 J	10 U	10 U	10 U	10 U	10 U	10 U	10 U	10 U	10 U	10 U	10 U	10 U	3700 U	10 U	10 U
9/21/96	16WS-29E	6.0 J	10 U	10 U	10 U	10 U	10 U	10 U	10 U	10 U	10 U	10 U	10 U	10 U	3700 U	10 U	10 U
9/21/96	16WS-29I	36	10 U	10 U	10 U	10 U	10 U	10 U	10 U	10 U	10 U	10 U	10 U	10 U	3700 U	10 U	10 U
9/28/96	16/WS-30E	10 U	10 U	10 U	10 U	10 U	10 U	10 U	10 U	10 U	10 U	10 U	10 U	10 U	3700 U	10 U	10 U
9/28/96	16/WS-30I	10 J	10 U	10 U	10 U	10 U	10 U	10 U	10 U	10 U	10 U	10 U	10 U	10 U	3700 U	10 U	10 U
9/28/96	16WS-31I	9 J	10 U	10 U	10 U	10 U	10 U	10 U	10 U	10 U	10 U	10 U	10 U	10 U	3700 U	10 U	10 U
10/22/96	16ES-35	3.0 J	10 U	10 U	10 U	10 U	10 U	10 U	10 U	10 U	10 U	10 U	10 U	10 U	3700 U	10 U	10 U
10/22/96	16WS-32E	15	10 U	10 U	10 U	10 U	10 U	10 U	10 U	10 U	10 U	10 U	10 U	10 U	3700 U	10 U	10 U
10/22/96	16WS-32I	74	20 U	20 U	20 U	20 U	20 U	20 U	20 U	20 U	20 U	20 U	20 U	20 U	7400 U	20 U	20 U
11/7/96	16ES-37	1.0 J	10 U	10 U	10 U	10 U	10 U	10 U	10 U	10 U	10 U	10 U	10 U	10 U	3700 U	10 U	10 U
11/7/96	16WS-36I	3.0 J	10 U	10 U	10 U	10 U	10 U	10 U	10 U	10 U	10 U	10 U	10 U	10 U	3700 U	10 U	10 U
11/8/96	16WS-38E	10 U	10 U	10 U	10 U	10 U	10 U	10 U	10 U	10 U	10 U	10 U	10 U	10 U	3700 U	10 U	10 U
11/12/96	16WS-39E	1.0 J	10 U	10 U	10 U	10 U	10 U	10 U	10 U	10 U	10 U	10 U	10 U	10 U	3700 U	10 U	10 U
11/12/96	16WS-39I	26	10 U	10 U	10 U	10 U	10 U	10 U	10 U	10 U	10 U	10 U	10 U	10 U	3700 U	10 U	10 U
11/12/96	16WS-40E	1.0 J	10 U	10 U	10 U	10 U	10 U	10 U	10 U	10 U	10 U	10 U	10 U	10 U	3700 U	10 U	10 U
11/25/96	16ES-41	6.0 J	10 U	10 U	10 U	10 U	10 U	10 U	10 U	10 U	10 U	10 U	10 U	10 U	3700 U	10 U	10 U
11/25/96	16WS-42E	4.0 J	10 U	10 U	10 U	10 U	10 U	10 U	10 U	10 U	10 U	10 U	10 U	10 U	3700 U	10 U	10 U
11/25/96	16WS-42I	15	10 U	10 U	10 U	10 U	10 U	10 U	10 U	10 U	10 U	10 U	10 U	10 U	3700 U	10 U	10 U
11/25/96	16WS-43E	3.0 J	10 U	10 U	10 U	10 U	10 U	10 U	10 U	10 U	10 U	10 U	10 U	10 U	3700 U	10 U	10 U
11/25/96	16WS-43I	11	10 U	10 U	10 U	10 U	10 U	10 U	10 U	10 U	10 U	10 U	10 U	10 U	3700 U	10 U	10 U
12/2/96	16ES-44	4.0 J	10 U	10 U	10 U	10 U	10 U	10 U	10 U	10 U	10 U	10 U	10 U	10 U	3700 U	10 U	10 U
12/2/96	16WS-45E	33 U	33 U	33 U	33 U	33 U	33 U	33 U	33 U	33 U	33 U	33 U	33 U	33 U	12000 U	33 U	33 U

TABLE 2
ANALYTICAL RESULTS SUMMARY

Sample Date	Field ID	ALLYL CHLORIDE	4-METHYL-2-PENTANONE	ACETONE	ACETONITRILE	ACROLEIN	ACRYLONITRILE	BENZENE	BROMODICHLOROMETHANE	BROMOFORM	BROMOMETHANE	CARBON DISULFIDE	CARBON TETRACHLORIDE	CHLOROBENZENE	CHLOROETHANE	CHLOROFORM	CHLOROMETHANE
7/25/96	16WS016I	15 U	10 U	10 U	60 U	90 U	95 U	10 U	10 U	10 U	10 U	10 U	10 U	10 U	10 U	10 U	10 U
7/25/96	16WS018I	15 U	10 U	10 U	60 U	90 U	95 U	10 U	10 U	10 U	10 U	10 U	10 U	10 U	10 U	10 U	10 U
7/25/96	16WS15E	15 U	10 U	6.0 JB	60 U	90 U	95 U	10 U	10 U	10 U	10 U	10 U	10 U	10 U	10 U	10 U	10 U
7/25/96	16WS16E	15 U	10 U	7.0 JB	60 U	90 U	95 U	10 U	10 U	10 U	10 U	10 U	10 U	10 U	10 U	10 U	10 U
7/26/96	16DW19	15 U	10 U	6.0 JB	60 U	90 U	95 U	10 U	10 U	10 U	10 U	10 U	10 U	10 U	10 U	10 U	10 U
7/26/96	16WS17E	15 U	10 U	10 U	60 U	90 U	95 U	10 U	10 U	10 U	10 U	10 U	10 U	10 U	10 U	10 U	10 U
7/26/96	16WS17I	15 U	10 U	4.0 JB	60 U	90 U	95 U	10 U	10 U	10 U	10 U	10 U	10 U	10 U	10 U	10 U	10 U
7/26/96	16WS18E	15 U	10 U	10 U	60 U	90 U	95 U	10 U	10 U	10 U	10 U	10 U	10 U	10 U	10 U	10 U	10 U
7/31/96	16WS20	15 U	10 U	10 U	60 U	90 U	95 U	10 U	10 U	10 U	10 U	10 U	10 U	10 U	10 U	10 U	10 U
7/31/96	16WS21	15 U	10 U	6.0 J	60 U	90 U	95 U	10 U	10 U	10 U	10 U	10 U	10 U	10 U	10 U	10 U	10 U
9/9/96	16ES-23	10 U	10 U	10 U	10 U	10 U	10 U	10 U	10 U	10 U	10 U	10 U	10 U	10 U	10 U	10 U	10 U
9/9/96	16ES-24	10 U	10 U	10 U	10 U	10 U	10 U	10 U	10 U	10 U	10 U	10 U	10 U	10 U	10 U	10 U	10 U
9/9/96	16WS-22E	10 U	10 U	7.0 JB	10 U	10 U	10 U	10 U	10 U	10 U	10 U	10 U	10 U	10 U	10 U	10 U	10 U
9/9/96	16WS-22I	10 U	10 U	10 U	10 U	10 U	10 U	10 U	10 U	10 U	10 U	10 U	10 U	10 U	10 U	10 U	10 U
9/9/96	16WS-25E	10 U	10 U	10 U	10 U	10 U	10 U	10 U	10 U	10 U	10 U	10 U	10 U	10 U	10 U	10 U	10 U
9/12/96	16WS-28E	15 U	10 U	10 U	60 U	90 U	95 U	10 U	10 U	10 U	10 U	10 U	10 U	10 U	10 U	10 U	10 U
9/16/96	16WS-26E	15 U	10 U	10 U	60 U	90 U	95 U	10 U	10 U	10 U	10 U	10 U	10 U	10 U	10 U	10 U	10 U
9/16/96	16WS-26I	15 U	10 U	10 U	60 U	90 U	95 U	10 U	10 U	10 U	10 U	10 U	10 U	10 U	10 U	10 U	10 U
9/16/96	16ES-27	15 U	10 U	10 U	60 U	90 U	95 U	10 U	10 U	10 U	10 U	10 U	10 U	10 U	10 U	10 U	10 U
9/21/96	16WS-29E	15 U	10 U	10 U	60 U	90 U	95 U	10 U	10 U	10 U	10 U	10 U	10 U	10 U	10 U	10 U	10 U
9/21/96	16WS-29I	15 U	10 U	10 U	60 U	90 U	95 U	10 U	10 U	10 U	10 U	10 U	10 U	10 U	10 U	10 U	10 U
9/28/96	16/WS-30E	15 U	10 U	10 U	60 U	90 U	95 U	10 U	10 U	10 U	10 U	10 U	10 U	10 U	10 U	10 U	10 U
9/28/96	16/WS-30I	15 U	10 U	10 U	60 U	90 U	95 U	10 U	10 U	10 U	10 U	10 U	10 U	10 U	10 U	10 U	10 U
9/28/96	16WS-31I	15 U	10 U	10 U	60 U	90 U	95 U	10 U	10 U	10 U	10 U	10 U	10 U	10 U	10 U	10 U	10 U
10/22/96	16ES-35	15 U	10 U	10 U	60 U	90 U	95 U	10 U	10 U	10 U	10 U	10 U	10 U	10 U	10 U	10 U	10 U
10/22/96	16WS-32E	15 U	10 U	10 U	60 U	90 U	95 U	10 U	10 U	10 U	10 U	10 U	10 U	10 U	10 U	10 U	10 U
10/22/96	16WS-32I	30 U	20 U	20 U	120 U	180 U	190 U	20 U	20 U	20 U	20 U	20 U	20 U	20 U	20 U	20 U	20 U
11/7/96	16ES-37	15 U	10 U	10 U	60 U	90 U	95 U	10 U	10 U	10 U	10 U	10 U	10 U	10 U	10 U	10 U	10 U
11/7/96	16WS-36I	15 U	10 U	10 U	60 U	90 U	95 U	10 U	10 U	10 U	10 U	10 U	10 U	10 U	10 U	10 U	10 U
11/8/96	16WS-38E	15 U	10 U	150	60 U	90 U	95 U	10 U	10 U	10 U	10 U	10 U	10 U	10 U	10 U	10 U	10 U
11/12/96	16WS-39E	15 U	10 U	10 U	60 U	90 U	95 U	10 U	10 U	10 U	10 U	10 U	10 U	10 U	10 U	10 U	10 U
11/12/96	16WS-39I	15 U	10 U	10 U	60 U	90 U	95 U	10 U	10 U	10 U	10 U	10 U	10 U	10 U	10 U	10 U	10 U
11/12/96	16WS-40E	15 U	10 U	10 U	60 U	90 U	95 U	10 U	10 U	10 U	10 U	10 U	10 U	10 U	10 U	10 U	10 U
11/25/96	16ES-41	15 U	10 U	120	60 U	90 U	95 U	10 U	10 U	10 U	10 U	10 U	10 U	10 U	10 U	10 U	10 U
11/25/96	16WS-42E	15 U	10 U	67	60 U	90 U	95 U	10 U	10 U	10 U	10 U	10 U	10 U	10 U	10 U	10 U	10 U
11/25/96	16WS-42I	15 U	10 U	110	60 U	90 U	95 U	10 U	10 U	10 U	10 U	10 U	10 U	10 U	10 U	10 U	10 U
11/25/96	16WS-43E	15 U	10 U	10 U	60 U	90 U	95 U	10 U	10 U	10 U	10 U	10 U	10 U	10 U	10 U	10 U	10 U
11/25/96	16WS-43I	15 U	10 U	36	60 U	90 U	95 U	10 U	10 U	10 U	10 U	10 U	10 U	10 U	10 U	10 U	10 U
12/2/96	16ES-44	15 U	10 U	120	60 U	90 U	95 U	10 U	10 U	10 U	10 U	10 U	10 U	10 U	10 U	10 U	10 U
1[illegible]/96	16WS-45E	50 U	33 U	610	200 U	300 U	310 U	[illegible] U	33 U	33 U	33 U	33 U	33 U	33 U	33 U	33 U	33 U

TABLE 2
ANALYTICAL RESULTS SUMMARY

Sample Date	Field ID	CIS-1,3-DICHLOROPROPENE	DIBROMOCHLOROMETHANE	DIBROMOMETHANE	DICHLORODIFLUOROMETHANE	ETHYL METHACRYLATE	ETHYLBENZENE	IODOMETHANE	ISOBUTANOL	2-METHYL-2-PROPENENITRILE	METHYL METHACRYLATE	METHYLENE CHLORIDE	PROPIONITRILE	STYRENE	TETRACHLOROETHENE	TOLUENE
7/25/96	16WS016I	10 U	10 U	10 U	10 U	NA	10 U	5.0 U	2800 U	20 U	20 U	2.0 JB	220 U	10 U	10 U	10 U
7/25/96	16WS018I	10 U	10 U	10 U	10 U	NA	10 U	5.0 U	2800 U	20 U	20 U	3.0 JB	220 U	10 U	10 U	10 U
7/25/96	16WS15E	10 U	10 U	10 U	10 U	NA	10 U	5.0 U	2800 U	20 U	20 U	2.0 JB	220 U	10 U	10 U	10 U
7/25/96	16WS16E	10 U	10 U	10 U	10 U	NA	10 U	5.0 U	2800 U	20 U	20 U	2.0 JB	220 U	10 U	10 U	10 U
7/26/96	16DW19	10 U	10 U	10 U	10 U	NA	10 U	5.0 U	2800 U	20 U	20 U	2.0 JB	220 U	10 U	10 U	10 U
7/26/96	16WS17E	10 U	10 U	10 U	10 U	NA	10 U	5.0 U	2800 U	20 U	20 U	2.0 JB	220 U	10 U	10 U	10 U
7/26/96	16WS17I	10 U	10 U	10 U	10 U	NA	10 U	5.0 U	2800 U	20 U	20 U	2.0 JB	220 U	10 U	10 U	10 U
7/26/96	16WS18E	10 U	10 U	10 U	10 U	NA	10 U	5.0 U	2800 U	20 U	20 U	3.0 JB	220 U	10 U	10 U	10 U
7/31/96	16WS20	10 U	10 U	10 U	10 U	NA	10 U	5.0 U	2800 U	20 U	20 U	1.0 J	220 U	10 U	10 U	10 U
7/31/96	16WS21	10 U	10 U	10 U	10 U	NA	10 U	5.0 U	2800 U	20 U	20 U	1.0 J	220 U	10 U	10 U	10 U
9/9/96	16ES-23	10 U	10 U	10 U	10 U	NA	10 U	10 U	10 U	10 U	10 U	10 U	10 U	10 U	10 U	10 U
9/9/96	16ES-24	10 U	10 U	10 U	10 U	NA	10 U	10 U	10 U	10 U	10 U	10 U	10 U	10 U	10 U	10 U
9/9/96	16WS-22E	10 U	10 U	10 U	10 U	NA	10 U	10 U	10 U	10 U	10 U	10 U	10 U	10 U	10 U	10 U
9/9/96	16WS-22I	10 U	10 U	10 U	10 U	NA	10 U	10 U	10 U	10 U	10 U	10 U	10 U	10 U	10 U	10 U
9/9/96	16WS-25E	10 U	10 U	10 U	10 U	NA	10 U	10 U	10 U	10 U	10 U	10 U	10 U	10 U	10 U	10 U
9/12/96	16WS-28E	10 U	10 U	10 U	10 U	NA	10 U	5.0 U	2800 U	20 U	20 U	3.0 JB	220 U	10 U	10 U	10 U
9/16/96	16WS-26E	10 U	10 U	10 U	10 U	NA	10 U	5.0 U	2800 U	20 U	20 U	8.0 JB	220 U	10 U	10 U	10 U
9/16/96	16WS-26I	10 U	10 U	10 U	10 U	NA	10 U	5.0 U	2800 U	20 U	20 U	4.0 JB	220 U	10 U	10 U	10 U
9/16/96	16ES-27	10 U	10 U	10 U	10 U	NA	10 U	5.0 U	2800 U	20 U	20 U	4.0 JB	220 U	10 U	10 U	10 U
9/21/96	16WS-29E	10 U	10 U	10 U	10 U	NA	10 U	5.0 U	2800 U	20 U	20 U	3.0 JB	220 U	10 U	10 U	10 U
9/21/96	16WS-29I	10 U	10 U	10 U	10 U	NA	10 U	5.0 U	2800 U	20 U	20 U	3.0 JB	220 U	10 U	10 U	10 U
9/28/96	16/WS-30E	10 U	10 U	10 U	10 U	10 U	10 U	5 U	2800 U	20 U	20 U	10 U	220 U	10 U	10 U	10 U
9/28/96	16/WS-30I	10 U	10 U	10 U	10 U	10 U	10 U	5 U	2800 U	20 U	20 U	10 U	220 U	10 U	10 U	10 U
9/28/96	16WS-31I	10 U	10 U	10 U	10 U	10 U	10 U	5 U	2800 U	20 U	20 U	10 U	220 U	10 U	10 U	10 U
10/22/96	16ES-35	10 U	10 U	10 U	10 U	10 U	10 U	5.0 U	2800 U	20 U	20 U	10 U	220 U	10 U	10 U	10 U
10/22/96	16WS-32E	10 U	10 U	10 U	10 U	10 U	10 U	5.0 U	2800 U	20 U	20 U	10 U	220 U	10 U	10 U	10 U
10/22/96	16WS-32I	20 U	20 U	20 U	20 U	20 U	20 U	10 U	5600 U	40 U	40 U	20 U	440 U	20 U	20 U	20 U
11/7/96	16ES-37	10 U	10 U	10 U	10 U	10 U	10 U	5.0 U	2800 U	20 U	20 U	10 U	220 U	10 U	10 U	10 U
11/7/96	16WS-36I	10 U	10 U	10 U	10 U	10 U	10 U	5.0 U	2800 U	20 U	20 U	10 U	220 U	10 U	10 U	10 U
11/8/96	16WS-38E	10 U	10 U	10 U	10 U	10 U	10 U	5.0 U	2800 U	20 U	20 U	10 U	220 U	10 U	10 U	10 U
11/12/96	16WS-39E	10 U	10 U	10 U	10 U	10 U	10 U	5.0 U	2800 U	20 U	20 U	10 U	220 U	10 U	10 U	10 U
11/12/96	16WS-39I	10 U	10 U	10 U	10 U	10 U	10 U	5.0 U	2800 U	20 U	20 U	10 U	220 U	10 U	10 U	10 U
11/12/96	16WS-40E	10 U	10 U	10 U	10 U	10 U	10 U	5.0 U	2800 U	20 U	20 U	10 U	220 U	10 U	10 U	10 U
11/25/96	16ES-41	10 U	10 U	10 U	10 U	10 U	10 U	5.0 U	2800 U	20 U	20 U	10 U	220 U	10 U	10 U	10 U
11/25/96	16WS-42E	10 U	10 U	10 U	10 U	10 U	10 U	5.0 U	2800 U	20 U	20 U	1.0 J	220 U	10 U	10 U	10 U
11/25/96	16WS-42I	10 U	10 U	10 U	10 U	10 U	10 U	5.0 U	2800 U	20 U	20 U	10 U	220 U	10 U	10 U	10 U
11/25/96	16WS-43E	10 U	10 U	10 U	10 U	10 U	10 U	5.0 U	2800 U	20 U	20 U	10 U	220 U	10 U	10 U	10 U
11/25/96	16WS-43I	10 U	10 U	10 U	10 U	10 U	10 U	5.0 U	2800 U	20 U	20 U	1.0 J	220 U	10 U	10 U	10 U
12/2/96	16ES-44	10 U	10 U	10 U	10 U	10 U	10 U	5.0 U	2800 U	20 U	20 U	10 U	220 U	10 U	10 U	10 U
12/2/96	16WS-45E	33 U	33 U	33 U	33 U	33 U	33 U	16 U	9200 U	66 U	66 U	33 U	730 U	33 U	33 U	33 U

TABLE
ANALYTICAL RESULTS SUMMARY

Sample Date	Field ID	TRANS-1,3-DICHLOROPROPENE	TRANS-1,4-DICHLORO-2-BUTENE	TRICHLOROETHENE	TRICHLOROFLUOROMETHANE	VINYL ACETATE	VINYL CHLORIDE
7/25/96	16WS016I	10 U	10 U	33	10 U	10 U	10 U
7/25/96	16WS018I	10 U	10 U	41	10 U	10 U	3.0 J
7/25/96	16WS15E	10 U	10 U	1.0 J	10 U	10 U	10 U
7/25/96	16WS16E	10 U	10 U	1.0 J	10 U	10 U	10 U
7/26/96	16DW19	10 U	10 U	10 U	10 U	10 U	10 U
7/26/96	16WS17E	10 U	10 U	5.0 J	10 U	10 U	10 U
7/26/96	16WS17I	10 U	10 U	43	10 U	10 U	10 U
7/26/96	16WS18E	10 U	10 U	10 U	10 U	10 U	10 U
7/31/96	16WS20	10 U	10 U	10 U	10 U	10 U	10 U
7/31/96	16WS21	10 U	10 U	10 U	10 U	10 U	10 U
9/9/96	16ES-23	10 U	10 U	2.0 J	10 U	10 U	10 U
9/9/96	16ES-24	10 U	10 U	2.0 J	10 U	10 U	10 U
9/9/96	16WS-22E	10 U	10 U	7.0 J	10 U	10 U	10 U
9/9/96	16WS-22I	10 U	10 U	63	10 U	10 U	4.0 J
9/9/96	16WS-25E	10 U	10 U	3.0 J	10 U	10 U	10 U
9/12/96	16WS-28E	10 U	10 U	2.0 J	10 U	10 U	10 U
9/16/96	16WS-26E	10 U	10 U	2.0 J	10 U	10 U	10 U
9/16/96	16WS-26I	10 U	10 U	25	10 U	10 U	10 U
9/16/96	16ES-27	10 U	10 U	8.0 J	10 U	10 U	10 U
9/21/96	16WS-29E	10 U	10 U	12	10 U	10 U	10 U
9/21/96	16WS-29I	10 U	10 U	97	10 U	10 U	10 U
9/28/96	16WS-30E	10 U	10 U	10 U	10 U	10 U	10 U
9/28/96	16WS-30I	10 U	10 U	47	10 U	10 U	10 U
9/28/96	16WS-31I	10 U	10 U	46	10 U	10 U	10 U
10/22/96	16ES-35	10 U	10 U	10	10 U	10 U	10 U
10/22/96	16WS-32E	10 U	10 U	18	10 U	10 U	10 U
10/22/96	16WS-32I	20 U	20 U	270	20 U	20 U	20 U
11/7/96	16ES-37	10 U	10 U	2.0 J	10 U	10 U	10 U
11/7/96	16WS-36I	10 U	10 U	14	10 U	10 U	10 U
11/8/96	16WS-38E	10 U	10 U	1.0 J	10 U	10 U	10 U
11/12/96	16WS-39E	10 U	10 U	4.0 J	10 U	10 U	10 U
11/12/96	16WS-39I	10 U	10 U	120	10 U	10 U	10 U
11/12/96	16WS-40E	10 U	10 U	4.0 J	10 U	10 U	10 U
11/25/96	16ES-41	10 U	10 U	22	10 U	10 U	10 U
11/25/96	16WS-42E	10 U	10 U	10	10 U	10 U	10 U
11/25/96	16WS-42I	10 U	10 U	48	10 U	10 U	10 U
11/25/96	16WS-43E	10 U	10 U	3.0 J	10 U	10 U	10 U
11/25/96	16WS-43I	10 U	10 U	21	10 U	10 U	10 U
12/2/96	16ES-44	10 U	10 U	17	10 U	10 U	10 U
12/2/96	16WS-45E	33 U	33 U	33 U	33 U	33 U	33 U

TABLE 2
ANALYTICAL RESULTS SUMMARY

Sample Date	Field ID	1,2-DICHLOROETHYLENE (cis & trans)	XYLENES	1,1,1,2-TETRACHLOROETHANE	1,1,1-TRICHLOROETHANE	1,1,2,2-TETRACHLOROETHANE	1,1,2-TRICHLOROETHANE	1,1-DICHLOROETHANE	1,1-DICHLOROETHENE	1,2,3-TRICHLOROPROPANE	1,2-DIBROMO-3-CHLOROPROPANE	1,2-DIBROMOETHANE	1,2-DICHLOROETHANE	1,2-DICHLOROPROPANE	1,4-DIOXANE	2-BUTANONE	2-HEXANONE
12/2/96	16WS-45I	23	17 U	17 U	17 U	17 U	17 U	17 U	17 U	17 U	17 U	17 U	17 U	17 U	6200 U	17 U	17 U
12/6/96	16ES-47	11	10 U	10 U	10 U	10 U	10 U	10 U	10 U	10 U	10 U	10 U	10 U	10 U	3700 U	10 U	10 U
12/6/96	16ES-48	11	10 U	10 U	10 U	10 U	10 U	10 U	10 U	10 U	10 U	10 U	10 U	10 U	3700 U	10 U	10 U
12/6/96	16WS-49E	2.0 J	10 U	10 U	10 U	10 U	10 U	10 U	10 U	10 U	10 U	10 U	10 U	10 U	3700 U	10 U	10 U
12/6/96	16WS-49I	13	10 U	10 U	10 U	10 U	10 U	10 U	10 U	10 U	10 U	10 U	10 U	10 U	3700 U	10 U	10 U
12/12/96	16ES-50	6.0 J	10 U	10 U	10 U	10 U	10 U	10 U	10 U	10 U	10 U	10 U	10 U	10 U	10 U	10 U	10 U
12/12/96	16WS-51E	1.0 J	10 U	10 U	10 U	10 U	10 U	10 U	10 U	10 U	10 U	10 U	10 U	10 U	10 U	10 U	10 U
12/12/96	16WS-51I	13	10 U	10 U	10 U	10 U	10 U	10 U	10 U	10 U	10 U	10 U	10 U	10 U	10 U	10 U	10 U
12/17/96	16ES-52	7.0 J	10 U	10 U	10 U	10 U	10 U	10 U	10 U	10 U	10 U	10 U	10 U	10 U	10 U	10 U	10 U
12/17/96	16WS-53I	5.0 J	10 U	10 U	10 U	10 U	10 U	10 U	10 U	10 U	10 U	10 U	10 U	10 U	10 U	10 U	10 U
12/17/96	16WS-54E	10 U	10 U	10 U	10 U	10 U	10 U	10 U	10 U	10 U	10 U	10 U	10 U	10 U	10 U	10 U	10 U
12/17/96	16WS-54I	6.0 J	10 U	10 U	10 U	10 U	10 U	10 U	10 U	10 U	10 U	10 U	10 U	10 U	10 U	10 U	10 U
12/18/96	16WS-55E	10 U	10 U	10 U	10 U	10 U	10 U	10 U	10 U	10 U	10 U	10 U	10 U	10 U	10 U	10 U	10 U
12/18/96	16WS-55I	8.0 J	10 U	10 U	10 U	10 U	10 U	10 U	10 U	10 U	10 U	10 U	10 U	10 U	10 U	10 U	10 U
12/24/96	16ES-59	5.0 J	10 U	10 U	10 U	10 U	10 U	10 U	10 U	10 U	10 U	10 U	10 U	10 U	3700 U	10 U	10 U
12/24/96	16WS-56E	2.0 J	10 U	10 U	10 U	10 U	10 U	10 U	10 U	10 U	10 U	10 U	10 U	10 U	3700 U	10 U	10 U
12/24/96	16WS-56I	12	10 U	10 U	10 U	10 U	10 U	10 U	10 U	10 U	10 U	10 U	10 U	10 U	3700 U	10 U	10 U
12/24/96	16WS-57TT	17	10 U	10 U	10 U	10 U	10 U	10 U	10 U	10 U	10 U	10 U	10 U	10 U	3700 U	10 U	10 U
12/24/96	16WS-58FT	12	10 U	10 U	10 U	10 U	10 U	10 U	10 U	10 U	10 U	10 U	10 U	10 U	3700 U	10 U	10 U
12/27/96	16ES-60	8.0 J	10 U	10 U	10 U	10 U	10 U	10 U	10 U	10 U	10 U	10 U	10 U	10 U	3700 U	10 U	10 U
12/27/96	16ES-61TT	6.0 J	10 U	10 U	10 U	10 U	10 U	10 U	10 U	10 U	10 U	10 U	10 U	10 U	3700 U	10 U	10 U
12/27/96	16WS-62FT	8.0 J	10 U	10 U	10 U	10 U	10 U	10 U	10 U	10 U	10 U	10 U	10 U	10 U	3700 U	10 U	10 U
12/27/96	16WS-63E	3.0 J	10 U	10 U	10 U	10 U	10 U	10 U	10 U	10 U	10 U	10 U	10 U	10 U	3700 U	10 U	10 U
12/27/96	16WS-63I	17	10 U	10 U	10 U	10 U	10 U	10 U	10 U	10 U	10 U	10 U	10 U	10 U	3700 U	10 U	10 U
12/27/96	16WS-64I	17	10 U	10 U	10 U	10 U	10 U	10 U	10 U	10 U	10 U	10 U	10 U	10 U	3700 U	10 U	10 U
1/13/97	16WS-65E1	4.0 J	10 U	10 U	10 U	10 U	10 U	10 U	10 U	10 U	10 U	10 U	10 U	10 U	3700 U	10 U	10 U
1/13/97	16WS-65E2	2.0 J	10 U	10 U	10 U	10 U	10 U	10 U	10 U	10 U	10 U	10 U	10 U	10 U	3700 U	10 U	10 U
1/13/97	16WS-65I	21	10 U	10 U	10 U	10 U	10 U	10 U	10 U	10 U	10 U	10 U	10 U	10 U	3700 U	10 U	10 U
1/17/97	16-WS-66E	10 U	10 U	10 U	10 U	10 U	10 U	10 U	10 U	10 U	10 U	10 U	10 U	10 U	3700 U	10 U	10 U
1/17/97	16-WS-66I	4.0 J	10 U	10 U	10 U	10 U	10 U	10 U	10 U	10 U	10 U	10 U	10 U	10 U	3700 U	10 U	10 U
1/21/97	16ES-67	10	10 U	10 U	10 U	10 U	10 U	10 U	10 U	10 U	10 U	10 U	10 U	10 U	3700 U	10 U	10 U
1/21/97	16WS-68E	4.0 J	10 U	10 U	10 U	10 U	10 U	10 U	10 U	10 U	10 U	10 U	10 U	10 U	3700 U	10 U	10 U
1/21/97	16WS-69E	4.0 J	10 U	10 U	10 U	10 U	10 U	10 U	10 U	10 U	10 U	10 U	10 U	10 U	3700 U	10 U	10 U
1/22/97	16ES-70	10 U	1.0 J	10 U	10 U	10 U	10 U	10 U	10 U	10 U	10 U	10 U	10 U	10 U	3700 U	10 U	10 U
1/22/97	16WS-71E	10 U	10 U	10 U	10 U	10 U	10 U	10 U	10 U	10 U	10 U	10 U	10 U	10 U	3700 U	10 U	10 U
1/22/97	16WS-71I	3.0 J	4.0 J	10 U	10 U	10 U	10 U	10 U	10 U	10 U	10 U	10 U	10 U	10 U	3700 U	10 U	10 U
1/22/97	16WS-72I	4.0 J	10 U	10 U	10 U	10 U	10 U	10 U	10 U	10 U	10 U	10 U	10 U	10 U	3700 U	10 U	10 U
1/27/97	16ES-73	2.0 J	10 U	10 U	10 U	10 U	10 U	10 U	10 U	10 U	10 U	10 U	10 U	10 U	3700 U	10 U	10 U
1/27/97	16WS-74E	10 U	10 U	10 U	10 U	10 U	10 U	10 U	10 U	10 U	10 U	10 U	10 U	10 U	3700 U	10 U	10 U
1/27/97	16WS-74I	2.0 J	10 U	10 U	10 U	10 U	10 U	10 U	10 U	10 U	10 U	10 U	10 U	10 U	3700 U	10 U	10 U

TABLE -
ANALYTICAL RESULTS SUMMARY

Sample Date	Field ID	ALLYL CHLORIDE	4-METHYL-2-PENTANONE	ACETONE	ACETONITRILE	ACROLEIN	ACRYLONITRILE	BENZENE	BROMODICHLOROMETHANE	BROMOFORM	BROMOMETHANE	CARBON DISULFIDE	CARBON TETRACHLORIDE	CHLOROBENZENE	CHLOROETHANE	CHLOROFORM	CHLOROMETHANE
12/2/96	16WS-45I	25 U	17 U	300	100 U	150 U	160 U	17 U	17 U	17 U	17 U	17 U	17 U	17 U	17 U	17 U	17 U
12/6/96	16ES-47	15 U	10 U	10 U	60 U	90 U	95 U	10 U	10 U	10 U	10 U	10 U	10 U	10 U	10 U	10 U	10 U
12/6/96	16ES-48	15 U	10 U	10 U	60 U	90 U	95 U	10 U	10 U	10 U	10 U	10 U	10 U	10 U	10 U	10 U	10 U
12/6/96	16WS-49E	15 U	10 U	10 U	60 U	90 U	95 U	10 U	10 U	10 U	10 U	10 U	10 U	10 U	10 U	10 U	10 U
12/6/96	16WS-49I	15 U	10 U	10 U	60 U	90 U	95 U	10 U	10 U	10 U	10 U	10 U	10 U	10 U	10 U	13	10 U
12/12/96	16ES-50	10 U	10 U	10 U	60 U	90 U	95 U	10 U	10 U	10 U	10 U	10 U	10 U	10 U	10 U	10 U	10 U
12/12/96	16WS-51E	10 U	10 U	10 U	60 U	90 U	95 U	10 U	10 U	10 U	10 U	10 U	10 U	10 U	10 U	10 U	10 U
12/12/96	16WS-51I	10 U	10 U	10 U	60 U	90 U	95 U	10 U	10 U	10 U	10 U	10 U	10 U	10 U	10 U	10 U	10 U
12/17/96	16ES-52	10 U	10 U	29	60 U	90 U	95 U	10 U	10 U	10 U	10 U	10 U	10 U	10 U	10 U	10 U	10 U
12/17/96	16WS-53I	10 U	10 U	10 U	60 U	90 U	95 U	10 U	10 U	10 U	10 U	10 U	10 U	10 U	10 U	10 U	10 U
12/17/96	16WS-54E	10 U	10 U	10 U	60 U	90 U	95 U	10 U	10 U	10 U	10 U	10 U	10 U	10 U	10 U	10 U	10 U
12/17/96	16WS-54I	10 U	10 U	10 U	60 U	90 U	95 U	10 U	10 U	10 U	10 U	10 U	10 U	10 U	10 U	10 U	10 U
12/18/96	16WS-55E	10 U	10 U	10 U	60 U	90 U	95 U	10 U	10 U	10 U	10 U	10 U	10 U	10 U	10 U	10 U	10 U
12/18/96	16WS-55I	10 U	10 U	10 U	60 U	90 U	95 U	10 U	10 U	10 U	10 U	10 U	10 U	10 U	10 U	10 U	10 U
12/24/96	16ES-59	15 U	10 U	10 U	60 U	90 U	95 U	10 U	10 U	10 U	10 U	10 U	10 U	10 U	10 U	10 U	10 U
12/24/96	16WS-56E	15 U	10 U	6.0 J	60 U	90 U	95 U	10 U	10 U	10 U	10 U	10 U	10 U	10 U	10 U	10 U	10 U
12/24/96	16WS-56I	15 U	10 U	10 U	60 U	90 U	95 U	10 U	10 U	10 U	10 U	10 U	10 U	10 U	10 U	10 U	10 U
12/24/96	16WS-57TT	15 U	10 U	10 U	60 U	90 U	95 U	10 U	10 U	10 U	10 U	10 U	10 U	10 U	10 U	10 U	10 U
12/24/96	16WS-58FT	15 U	10 U	8.0 J	60 U	90 U	95 U	10 U	10 U	10 U	10 U	10 U	10 U	10 U	10 U	10 U	10 U
12/27/96	16ES-60	15 U	10 U	10 U	60 U	90 U	95 U	10 U	10 U	10 U	10 U	10 U	10 U	10 U	10 U	10 U	10 U
12/27/96	16ES-61TT	15 U	10 U	10 U	60 U	90 U	95 U	10 U	10 U	10 U	10 U	10 U	10 U	10 U	10 U	10 U	10 U
12/27/96	16WS-62FT	15 U	10 U	10 U	60 U	90 U	95 U	10 U	10 U	10 U	10 U	10 U	10 U	10 U	10 U	10 U	10 U
12/27/96	16WS-63E	15 U	10 U	10 U	60 U	90 U	95 U	10 U	10 U	10 U	10 U	10 U	10 U	10 U	10 U	10 U	10 U
12/27/96	16WS-63I	15 U	10 U	10 U	60 U	90 U	95 U	10 U	10 U	10 U	10 U	10 U	10 U	10 U	10 U	10 U	10 U
12/27/96	16WS-64I	15 U	10 U	10 U	60 U	90 U	95 U	10 U	10 U	10 U	10 U	10 U	10 U	10 U	10 U	10 U	10 U
1/13/97	16WS-65E1	15 U	10 U	10 U	60 U	90 U	95 U	10 U	10 U	10 U	10 U	10 U	10 U	10 U	10 U	10 U	10 U
1/13/97	16WS-65E2	15 U	10 U	10 U	60 U	90 U	95 U	10 U	10 U	10 U	10 U	10 U	10 U	10 U	10 U	10 U	10 U
1/13/97	16WS-65I	15 U	10 U	10 U	60 U	90 U	95 U	10 U	10 U	10 U	10 U	10 U	10 U	10 U	10 U	10 U	10 U
1/17/97	16-WS-66E	15 U	10 U	10 U	60 U	90 U	95 U	10 U	10 U	10 U	10 U	10 U	10 U	10 U	10 U	1.0 J	10 U
1/17/97	16-WS-66I	15 U	10 U	10 U	60 U	90 U	95 U	10 U	10 U	10 U	10 U	10 U	10 U	10 U	10 U	11	10 U
1/21/97	16ES-67	15 U	10 U	10 U	60 U	90 U	95 U	10 U	10 U	10 U	10 U	10 U	10 U	10 U	10 U	10 U	10 U
1/21/97	16WS-68E	15 U	10 U	10 U	60 U	90 U	95 U	10 U	10 U	10 U	10 U	10 U	10 U	10 U	10 U	10 U	10 U
1/21/97	16WS-69E	15 U	10 U	10 U	60 U	90 U	95 U	10 U	10 U	10 U	10 U	10 U	10 U	10 U	10 U	10 U	10 U
1/22/97	16ES-70	15 U	10 U	10 U	60 U	90 U	95 U	10 U	10 U	10 U	10 U	10 U	10 U	10 U	10 U	10 U	10 U
1/22/97	16WS-71E	15 U	10 U	10 U	60 U	90 U	95 U	10 U	10 U	10 U	10 U	10 U	10 U	10 U	10 U	10 U	10 U
1/22/97	16WS-71I	15 U	10 U	10 U	60 U	90 U	95 U	10 U	10 U	10 U	10 U	10 U	10 U	10 U	10 U	10 U	10 U
1/22/97	16WS-72I	15 U	10 U	10 U	60 U	90 U	95 U	10 U	10 U	10 U	10 U	10 U	10 U	10 U	10 U	10 U	10 U
1/27/97	16ES-73	15 U	10 U	10 U	60 U	90 U	95 U	10 U	10 U	10 U	10 U	10 U	10 U	10 U	10 U	10 U	10 U
1/27/97	16WS-74E	15 U	10 U	10 U	60 U	90 U	95 U	10 U	10 U	10 U	10 U	10 U	10 U	10 U	10 U	10 U	10 U
1/27/97	16WS-74I	15 U	10 U	10 U	60 U	90 U	95 U	10 U	10 U	10 U	10 U	10 U	10 U	10 U	10 U	10 U	10 U

TABLE 2
ANALYTICAL RESULTS SUMMARY

Sample Date	Field ID	CIS-1,3-DICHLOROPROPENE	DIBROMOCHLOROMETHANE	DIBROMOMETHANE	DICHLORODIFLUOROMETHANE	ETHYL METHACRYLATE	ETHYLBENZENE	IODOMETHANE	ISOBUTANOL	2-METHYL-2-PROPENENITRILE	METHYL METHACRYLATE	METHYLENE CHLORIDE	PROPIONITRILE	STYRENE	TETRACHLOROETHENE	TOLUENE
12/2/96	16WS-45I	17 U	17 U	17 U	17 U	17 U	17 U	8 U	4700 U	33 U	33 U	17 U	370 U	17 U	17 U	17 U
12/6/96	16ES-47	10 U	10 U	10 U	10 U	10 U	10 U	5.0 U	2800 U	20 U	20 U	10 U	220 U	10 U	10 U	10 U
12/6/96	16ES-48	10 U	10 U	10 U	10 U	10 U	10 U	5.0 U	2800 U	20 U	20 U	10 U	220 U	10 U	10 U	10 U
12/6/96	16WS-49E	10 U	10 U	10 U	10 U	10 U	10 U	5.0 U	2800 U	20 U	20 U	10 U	220 U	10 U	10 U	10 U
12/6/96	16WS-49I	10 U	10 U	10 U	10 U	10 U	10 U	5.0 U	2800 U	20 U	20 U	10 U	220 U	10 U	10 U	10 U
12/12/96	16ES-50	10 U	10 U	10 U	10 U	10 U	10 U	5.0 U	2800 U	20 U	20 U	10 U	10 U	10 U	10 U	10 U
12/12/96	16WS-51E	10 U	10 U	10 U	10 U	10 U	10 U	5.0 U	2800 U	20 U	20 U	10 U	10 U	10 U	10 U	10 U
12/12/96	16WS-51I	10 U	10 U	10 U	10 U	10 U	10 U	5.0 U	2800 U	20 U	20 U	10 U	10 U	10 U	10 U	10 U
12/17/96	16ES-52	10 U	10 U	10 U	10 U	10 U	10 U	5.0 U	2800 U	20 U	20 U	10 U	10 U	10 U	10 U	10 U
12/17/96	16WS-53I	10 U	10 U	10 U	10 U	10 U	10 U	5.0 U	2800 U	20 U	20 U	10 U	10 U	10 U	10 U	10 U
12/17/96	16WS-54E	10 U	10 U	10 U	10 U	10 U	10 U	5.0 U	2800 U	20 U	20 U	10 U	10 U	10 U	10 U	10 U
12/17/96	16WS-54I	10 U	10 U	10 U	10 U	10 U	10 U	5.0 U	2800 U	20 U	20 U	10 U	10 U	10 U	10 U	10 U
12/18/96	16WS-55E	10 U	10 U	10 U	10 U	10 U	10 U	5.0 U	2800 U	20 U	20 U	10 U	10 U	10 U	10 U	10 U
12/18/96	16WS-55I	10 U	10 U	10 U	10 U	10 U	10 U	5.0 U	2800 U	20 U	20 U	10 U	10 U	10 U	10 U	10 U
12/24/96	16ES-59	10 U	10 U	10 U	10 U	10 U	10 U	5.0 U	2800 U	20 U	20 U	10 U	220 U	10 U	10 U	10 U
12/24/96	16WS-56E	10 U	10 U	10 U	10 U	10 U	10 U	5.0 U	2800 U	20 U	20 U	10 U	220 U	10 U	10 U	10 U
12/24/96	16WS-56I	10 U	10 U	10 U	10 U	10 U	10 U	5.0 U	2800 U	20 U	20 U	10 U	220 U	10 U	10 U	10 U
12/24/96	16WS-57TT	10 U	10 U	10 U	10 U	10 U	10 U	5.0 U	2800 U	20 U	20 U	10 U	220 U	10 U	10 U	10 U
12/24/96	16WS-58FT	10 U	10 U	10 U	10 U	10 U	10 U	5.0 U	2800 U	20 U	20 U	10 U	220 U	10 U	10 U	10 U
12/27/96	16ES-60	10 U	10 U	10 U	10 U	10 U	10 U	5.0 U	2800 U	20 U	20 U	10 U	220 U	10 U	10 U	10 U
12/27/96	16ES-61TT	10 U	10 U	10 U	10 U	10 U	10 U	5.0 U	2800 U	20 U	20 U	10 U	220 U	10 U	10 U	10 U
12/27/96	16WS-62FT	10 U	10 U	10 U	10 U	10 U	10 U	5.0 U	2800 U	20 U	20 U	10 U	220 U	10 U	10 U	10 U
12/27/96	16WS-63E	10 U	10 U	10 U	10 U	10 U	10 U	5.0 U	2800 U	20 U	20 U	10 U	220 U	10 U	10 U	10 U
12/27/96	16WS-63I	10 U	10 U	10 U	10 U	10 U	10 U	5.0 U	2800 U	20 U	20 U	10 U	220 U	10 U	10 U	10 U
12/27/96	16WS-64I	10 U	10 U	10 U	10 U	10 U	10 U	5.0 U	2800 U	20 U	20 U	10 U	220 U	10 U	10 U	10 U
1/13/97	16WS-65E1	10 U	10 U	10 U	10 U	10 U	10 U	5.0 U	2800 U	20 U	20 U	10 U	220 U	10 U	10 U	10 U
1/13/97	16WS-65E2	10 U	10 U	10 U	10 U	10 U	10 U	5.0 U	2800 U	20 U	20 U	10 U	220 U	10 U	10 U	10 U
1/13/97	16WS-65I	10 U	10 U	10 U	10 U	10 U	10 U	5.0 U	2800 U	20 U	20 U	10 U	220 U	10 U	10 U	10 U
1/17/97	16-WS-66E	10 U	10 U	10 U	10 U	10 U	10 U	5.0 U	2800 U	20 U	20 U	10 U	220 U	10 U	10 U	10 U
1/17/97	16-WS-66I	10 U	10 U	10 U	10 U	10 U	10 U	5.0 U	2800 U	20 U	20 U	10 U	220 U	10 U	10 U	10 U
1/21/97	16ES-67	10 U	10 U	10 U	10 U	10 U	10 U	5.0 U	2800 U	20 U	20 U	10 U	220 U	10 U	10 U	10 U
1/21/97	16WS-68E	10 U	10 U	10 U	10 U	10 U	10 U	5.0 U	2800 U	20 U	20 U	10 U	220 U	10 U	10 U	10 U
1/21/97	16WS-69E	10 U	10 U	10 U	10 U	10 U	10 U	5.0 U	2800 U	20 U	20 U	10 U	220 U	10 U	10 U	10 U
1/22/97	16ES-70	10 U	10 U	10 U	10 U	10 U	10 U	5.0 U	2800 U	20 U	20 U	10 U	220 U	10 U	10 U	2.0 J
1/22/97	16WS-71E	10 U	10 U	10 U	10 U	10 U	10 U	5.0 U	2800 U	20 U	20 U	10 U	220 U	10 U	10 U	1.0 J
1/22/97	16WS-71I	10 U	10 U	10 U	10 U	10 U	10 U	5.0 U	2800 U	20 U	20 U	10 U	220 U	10 U	10 U	5.0 J
1/22/97	16WS-72I	10 U	10 U	10 U	10 U	10 U	10 U	5.0 U	2800 U	20 U	20 U	10 U	220 U	10 U	10 U	10 U
1/27/97	16ES-73	10 U	10 U	10 U	10 U	10 U	10 U	5.0 U	2800 U	20 U	20 U	10 U	220 U	10 U	10 U	10 U
1/27/97	16WS-74E	10 U	10 U	10 U	10 U	10 U	10 U	5.0 U	2800 U	20 U	20 U	10 U	220 U	10 U	10 U	10 U
1/27/97	16WS-74I	10 U	10 U	10 U	10 U	10 U	10 U	5.0 U	2800 U	20 U	20 U	10 U	220 U	10 U	10 U	10 U

TABLE 2
ANALYTICAL RESULTS SUMMARY

Sample Date	Field ID	TRANS-1,3-DICHLOROPROPENE	TRANS-1,4-DICHLORO-2-BUTENE	TRICHLOROETHENE	TRICHLOROFLUOROMETHANE	VINYL ACETATE	VINYL CHLORIDE
12/2/96	16WS-45I	17 U	17 U	44	17 U	17 U	17 U
12/6/96	16ES-47	10 U	10 U	33	10 U	10 U	2.0 J
12/6/96	16ES-48	10 U	10 U	33	10 U	10 U	2.0 J
12/6/96	16WS-49E	10 U	10 U	5.0 J	10 U	10 U	10 U
12/6/96	16WS-49I	10 U	10 U	31	10 U	10 U	10 U
12/12/96	16ES-50	10 U	10 U	22	10 U	10 U	10 U
12/12/96	16WS-51E	10 U	10 U	3.0 J	10 U	10 U	10 U
12/12/96	16WS-51I	10 U	10 U	74	10 U	10 U	10 U
12/17/96	16ES-52	10 U	10 U	21	10 U	10 U	10 U
12/17/96	16WS-53I	10 U	10 U	13	10 U	10 U	10 U
12/17/96	16WS-54E	10 U	10 U	1.0 J	10 U	10 U	10 U
12/17/96	16WS-54I	10 U	10 U	13	10 U	10 U	10 U
12/18/96	16WS-55E	10 U	10 U	1.0 J	10 U	10 U	10 U
12/18/96	16WS-55I	10 U	10 U	21	10 U	10 U	10 U
12/24/96	16ES-59	10 U	10 U	18	10 U	10 U	10 U
12/24/96	16WS-56E	10 U	10 U	3.0 J	10 U	10 U	10 U
12/24/96	16WS-56I	10 U	10 U	28	10 U	10 U	10 U
12/24/96	16WS-57TT	10 U	10 U	61	10 U	10 U	10 U
12/24/96	16WS-58FT	10 U	10 U	37	10 U	10 U	10 U
12/27/96	16ES-60	10 U	10 U	28	10 U	10 U	10 U
12/27/96	16ES-61TT	10 U	10 U	21	10 U	10 U	10 U
12/27/96	16WS-62FT	10 U	10 U	12	10 U	10 U	10 U
12/27/96	16WS-63E	10 U	10 U	4.0 J	10 U	10 U	10 U
12/27/96	16WS-63I	10 U	10 U	36	10 U	10 U	10 U
12/27/96	16WS-64I	10 U	10 U	38	10 U	10 U	10 U
1/13/97	16WS-65E1	10 U	10 U	6.0 J	10 U	10 U	10 U
1/13/97	16WS-65E2	10 U	10 U	4.0 J	10 U	10 U	10 U
1/13/97	16WS-65I	10 U	10 U	54	10 U	10 U	10 U
1/17/97	16-WS-66E	10 U	10 U	10 U	10 U	10 U	10 U
1/17/97	16-WS-66I	10 U	10 U	12	10 U	10 U	10 U
1/21/97	16ES-67	10 U	10 U	38	10 U	10 U	10 U
1/21/97	16WS-68E	10 U	10 U	10	10 U	10 U	10 U
1/21/97	16WS-69E	10 U	10 U	10	10 U	10 U	10 U
1/22/97	16ES-70	10 U	10 U	10 U	10 U	10 U	10 U
1/22/97	16WS-71E	10 U	10 U	2.0 J	10 U	10 U	10 U
1/22/97	16WS-71I	10 U	10 U	12	10 U	10 U	10 U
1/22/97	16WS-72I	10 U	10 U	4.0 J	10 U	10 U	10 U
1/27/97	16ES-73	10 U	10 U	11	10 U	10 U	10 U
1/27/97	16WS-74E	10 U	10 U	2.0 J	10 U	10 U	10 U
1/27/97	16WS-74I	10 U	10 U	10	10 U	10 U	10 U

TABLE 2
ANALYTICAL RESULTS SUMMARY

Sample Date	Field ID	1,2-DICHLOROETHYLENE (cis & trans)	XYLENES	1,1,1,2-TETRACHLOROETHANE	1,1,1-TRICHLOROETHANE	1,1,2,2-TETRACHLOROETHANE	1,1,2-TRICHLOROETHANE	1,1-DICHLOROETHANE	1,1-DICHLOROETHENE	1,2,3-TRICHLOROPROPANE	1,2-DIBROMO-3-CHLOROPROPANE	1,2-DIBROMOETHANE	1,2-DICHLOROETHANE	1,2-DICHLOROPROPANE	1,4-DIOXANE	2-BUTANONE	2-HEXANONE
2/4/97	16ES-75	10 U	10 U	10 U	10 U	10 U	10 U	10 U	10 U	10 U	10 U	10 U	10 U	10 U	3700 U	10 U	10 U
2/4/97	16WS-76I	11	10 U	10 U	10 U	10 U	10 U	10 U	10 U	10 U	10 U	10 U	10 U	10 U	3700 U	10 U	10 U
2/5/97	16WS-77E	2.0 J	10 U	10 U	10 U	10 U	10 U	10 U	10 U	10 U	10 U	10 U	10 U	10 U	3700 U	10 U	10 U
2/5/97	16WS-77I	10	10 U	10 U	10 U	10 U	10 U	10 U	10 U	10 U	10 U	10 U	10 U	10 U	3700 U	10 U	10 U
2/5/97	16WS-78I	12	10 U	10 U	10 U	10 U	10 U	10 U	10 U	10 U	10 U	10 U	10 U	10 U	3700 U	10 U	10 U
2/19/97	16WS-79I	10 U	16	10 U	10 U	10 U	10 U	10 U	10 U	10 U	10 U	10 U	10 U	10 U	3700 U	10 U	10 U
2/21/97	16ES-80	6.0 J	10 U	10 U	10 U	10 U	10 U	10 U	10 U	10 U	10 U	10 U	10 U	10 U	3700 U	10 U	10 U
2/21/97	16WS-81I	10 U	10 U	10 U	10 U	10 U	10 U	10 U	10 U	10 U	10 U	10 U	10 U	10 U	3700 U	10 U	10 U
2/21/97	16WS-82E	10 U	10 U	10 U	10 U	10 U	10 U	10 U	10 U	10 U	10 U	10 U	10 U	10 U	3700 U	10 U	10 U
2/21/97	16WS-82I	2.0 J	10 U	10 U	10 U	10 U	10 U	10 U	10 U	10 U	10 U	10 U	10 U	10 U	3700 U	10 U	10 U
2/27/97	16WS-83I	8.0 J	10 U	10 U	10 U	10 U	10 U	10 U	10 U	10 U	10 U	10 U	10 U	10 U	3700 U	10 U	10 U
3/7/97	16ES-87	13	10 U	10 U	10 U	10 U	10 U	10 U	10 U	10 U	10 U	10 U	10 U	10 U	3700 U	10 U	10 U
3/7/97	16WS-88E	10 U	10 U	10 U	10 U	10 U	10 U	10 U	10 U	10 U	10 U	10 U	10 U	10 U	3700 U	10 U	10 U
3/7/97	16WS-88I	9.0 J	10 U	10 U	10 U	10 U	10 U	10 U	10 U	10 U	10 U	10 U	10 U	10 U	3700 U	10 U	10 U
3/15/97	16WS89E	6.0 J	10 U	10 UB	10 U	10 U	10 U	10 U	10 U	10 UB	10 UB	10 UB	10 U	10 U	3700 UB	10 UB	10 UB
3/15/97	16WS90E	7.0 J	10 U	10 UB	10 U	10 U	10 U	10 U	10 U	10 UB	10 UB	10 UB	10 U	10 U	3700 UB	10 UB	10 UB
3/16/97	16WS91E	2.0 J	10 U	10 UB	10 U	10 U	10 U	10 U	10 U	10 UB	10 UB	10 UB	10 U	10 U	3700 UB	10 UB	10 UB
3/18/97	16ES-93	8.0 J	10 U	10 U	10 U	10 U	10 U	10 U	1.0 J	10 U	10 U	10 U	10 U	10 U	3700 U	10 U	10 U
3/18/97	16WS92E	2.0 J	10 U	10 U	10 U	10 U	10 U	10 U	10 U	10 U	10 U	10 U	10 U	10 U	3700 U	10 U	10 U
3/25/97	16WS-93E	10 U	10 U	10 U	10 U	10 U	10 U	10 U	10 U	10 U	10 U	10 U	10 U	10 U	3700 U	10 U	10 U
3/25/97	16WS-93I	3.0 J	10 U	10 U	10 U	10 U	10 U	10 U	10 U	10 U	10 U	10 U	10 U	10 U	3700 U	10 U	10 U
4/3/97	16ES-98	31	10 U	10 U	10 U	10 U	10 U	10 U	4.0 J	10 U	10 U	10 U	10 U	10 U	3700 U	10 U	10 U
4/3/97	16ES-99	21	10 U	10 U	10 U	10 U	10 U	10 U	3.0 J	10 U	10 U	10 U	10 U	10 U	3700 U	10 U	10 U
4/3/97	16WS-100I	5.0 J	10 U	10 U	10 U	10 U	10 U	10 U	10 U	10 U	10 U	10 U	10 U	10 U	3700 U	10 U	10 U
4/3/97	16WS-101E	2.0 J	10 U	10 U	10 U	10 U	10 U	10 U	10 U	10 U	10 U	10 U	10 U	10 U	3700 U	10 U	10 U
4/3/97	16WS-94E	10 U	10 U	10 U	10 U	10 U	10 U	10 U	10 U	10 U	10 U	10 U	10 U	10 U	3700 U	10 U	10 U
4/3/97	16WS-94I	3.0 J	10 U	10 U	10 U	10 U	10 U	10 U	10 U	10 U	10 U	10 U	10 U	10 U	3700 U	10 U	10 U
4/3/97	16WS-96E	10 U	10 U	10 U	10 U	10 U	10 U	10 U	10 U	10 U	10 U	10 U	10 U	10 U	3700 U	10 U	10 U
4/3/97	16WS-97E	1.0 J	10 U	10 U	10 U	10 U	10 U	10 U	10 U	10 U	10 U	10 U	10 U	10 U	3700 U	10 U	10 U
4/3/97	16WS-97I	5.0 J	10 U	10 U	10 U	10 U	10 U	10 U	10 U	10 U	10 U	10 U	10 U	10 U	3700 U	10 U	10 U
4/4/97	16ES-102	23	10 U	10 U	10 U	10 U	10 U	10 U	3.0 J	10 U	10 U	10 U	10 U	10 U	3700 U	10 U	10 U
4/4/97	16WS-102E	8.0 J	10 U	10 U	10 U	10 U	10 U	10 U	10 U	10 U	10 U	10 U	10 U	10 U	3700 U	10 U	10 U
4/4/97	16WS-102I	27	10 U	10 U	10 U	10 U	10 U	10 U	3.0 J	10 U	10 U	10 U	10 U	10 U	3700 U	10 U	10 U
4/4/97	16WS-FB01	10 U	10 U	10 U	10 U	10 U	10 U	10 U	10 U	10 U	10 U	10 U	10 U	10 U	3700 U	10 U	10 U
4/4/97	16WS-RB01	10 U	10 U	10 U	10 U	10 U	10 U	10 U	10 U	10 U	10 U	10 U	10 U	10 U	3700 U	10 U	10 U
4/18/97	16ES-105	47	14 U	14 U	14 U	14 U	14 U	14 U	5.0 J	14 U	14 U	14 U	14 U	14 U	5200 U	14 U	14 U
4/18/97	16WS-106E	2.0 J	10 U	10 U	10 U	10 U	10 U	10 U	10 U	10 U	10 U	10 U	10 U	10 U	3700 U	10 U	10 U
4/18/97	16WS-106I	4.0 J	10 U	10 U	10 U	10 U	10 U	10 U	10 U	10 U	10 U	10 U	10 U	10 U	3700 U	10 U	10 U
4/19/97	16ES-103	6.0 J	10 U	10 U	10 U	10 U	10 U	10 U	10 U	10 U	10 U	10 U	10 U	10 U	3700 U	10 U	10 U
4/19/97	16WS-103E	10 U	10 U	10 U	10 U	10 U	10 U	10 U	10 U	10 U	10 U	10 U	10 U	10 U	3700 U	10 U	10 U

TABLE 2
ANALYTICAL RESULTS SUMMARY

Sample Date	Field ID	ALLYL CHLORIDE	4-METHYL-2-PENTANONE	ACETONE	ACETONITRILE	ACROLEIN	ACRYLONITRILE	BENZENE	BROMODICHLOROMETHANE	BROMOFORM	BROMOMETHANE	CARBON DISULFIDE	CARBON TETRACHLORIDE	CHLOROBENZENE	CHLOROETHANE	CHLOROFORM	CHLOROMETHANE
2/4/97	16ES-75	15 U	10 U	10 U	60 U	90 U	95 U	10 U	10 U	10 U	10 U	10 U	10 U	10 U	10 U	10 U	10 U
2/4/97	16WS-76I	15 U	10 U	10 U	60 U	90 U	95 U	10 U	10 U	10 U	10 U	10 U	10 U	10 U	10 U	10 U	10 U
2/5/97	16WS-77E	15 U	10 U	10 U	60 U	90 U	95 U	10 U	10 U	10 U	10 U	10 U	10 U	10 U	10 U	10 U	10 U
2/5/97	16WS-77I	15 U	10 U	10 U	60 U	90 U	95 U	10 U	10 U	10 U	10 U	10 U	10 U	10 U	10 U	10 U	10 U
2/5/97	16WS-78I	15 U	10 U	10 U	60 U	90 U	95 U	10 U	10 U	10 U	10 U	10 U	10 U	10 U	10 U	10 U	10 U
2/19/97	16WS-79I	15 U	10 U	10 U	60 U	90 U	95 U	10 U	10 U	10 U	10 U	10 U	10 U	10 U	10 U	10 U	10 U
2/21/97	16ES-80	15 U	10 U	10 U	60 U	90 U	95 U	10 U	10 U	10 U	10 U	10 U	10 U	10 U	10 U	10 U	10 U
2/21/97	16WS-81I	15 U	10 U	10 U	60 U	90 U	95 U	10 U	10 U	10 U	10 U	10 U	10 U	10 U	10 U	10 U	10 U
2/21/97	16WS-82E	15 U	10 U	10 U	60 U	90 U	95 U	10 U	10 U	10 U	10 U	10 U	10 U	10 U	10 U	10 U	10 U
2/21/97	16WS-82I	15 U	10 U	10 U	60 U	90 U	95 U	10 U	10 U	10 U	10 U	10 U	10 U	10 U	10 U	10 U	10 U
2/27/97	16WS-83I	15 U	10 U	10 U	60 U	90 U	95 U	10 U	10 U	10 U	10 U	10 U	10 U	10 U	10 U	10 U	10 U
3/7/97	16ES-87	15 U	10 U	11	60 U	90 U	95 U	10 U	10 U	10 U	10 U	10 U	10 U	10 U	10 U	10 U	10 U
3/7/97	16WS-88E	15 U	10 U	10 U	60 U	90 U	95 U	10 U	10 U	10 U	10 U	10 U	10 U	10 U	10 U	10 U	10 U
3/7/97	16WS-88I	15 U	10 U	10 U	60 U	90 U	95 U	10 U	10 U	10 U	10 U	10 U	10 U	10 U	10 U	2.0 J	10 U
3/15/97	16WS89E	15 UB	10 UB	10 UB	60 UB	90 U	95 U	10 U	10 U	10 U	10 U	10 UB	10 U	10 U	10 U	10 U	10 U
3/15/97	16WS90E	15 UB	10 UB	10 UB	60 UB	90 U	95 U	10 U	10 U	10 U	10 U	10 UB	10 U	10 U	10 U	10 U	10 U
3/16/97	16WS91E	15 UB	10 UB	10 UB	60 UB	90 U	95 U	10 U	10 U	10 U	10 U	10 UB	10 U	10 U	10 U	10 U	10 U
3/18/97	16ES-93	15 U	10 U	14	60 U	90 U	95 U	10 U	10 U	10 U	10 U	10 U	10 U	10 U	10 U	10 U	10 U
3/18/97	16WS92E	15 U	10 U	76	60 U	90 U	95 U	10 U	10 U	10 U	10 U	10 U	10 U	10 U	10 U	10 U	10 U
3/25/97	16WS-93E	15 U	10 U	12	60 U	90 U	95 U	10 U	10 U	10 U	10 U	10 U	10 U	10 U	10 U	10 U	10 U
3/25/97	16WS-93I	15 U	10 U	10 U	60 U	90 U	95 U	10 U	10 U	10 U	10 U	10 U	10 U	10 U	10 U	10 U	10 U
4/3/97	16ES-98	15 U	10 U	10 U	60 U	90 U	95 U	10 U	10 U	10 U	10 U	10 U	10 U	10 U	10 U	10 U	10 U
4/3/97	16ES-99	15 U	10 U	9.0 J	60 U	90 U	95 U	10 U	10 U	10 U	10 U	10 U	10 U	10 U	10 U	10 U	10 U
4/3/97	16WS-100I	15 U	10 U	10 U	60 U	90 U	95 U	10 U	10 U	10 U	10 U	10 U	10 U	10 U	10 U	10 U	10 U
4/3/97	16WS-101E	15 U	10 U	10 U	60 U	90 U	95 U	10 U	10 U	10 U	10 U	10 U	10 U	10 U	10 U	10 U	10 U
4/3/97	16WS-94E	15 U	10 U	4.0 J	60 U	90 U	95 U	10 U	10 U	10 U	10 U	10 U	10 U	10 U	10 U	10 U	10 U
4/3/97	16WS-94I	15 U	10 U	10 U	60 U	90 U	95 U	10 U	10 U	10 U	10 U	10 U	10 U	10 U	10 U	10 U	10 U
4/3/97	16WS-96E	15 U	10 U	10 U	60 U	90 U	95 U	10 U	10 U	10 U	10 U	10 U	10 U	10 U	10 U	10 U	10 U
4/3/97	16WS-97E	15 U	10 U	10 U	60 U	90 U	95 U	10 U	10 U	10 U	10 U	10 U	10 U	10 U	10 U	10 U	10 U
4/3/97	16WS-97I	15 U	10 U	10 U	60 U	90 U	95 U	10 U	10 U	10 U	10 U	10 U	10 U	10 U	10 U	10 U	10 U
4/4/97	16ES-102	15 U	10 U	10 U	60 U	90 U	95 U	10 U	10 U	10 U	10 U	10 U	10 U	10 U	10 U	10 U	10 U
4/4/97	16WS-102E	15 U	10 U	52	60 U	90 U	95 U	10 U	10 U	10 U	10 U	10 U	10 U	10 U	10 U	10 U	10 U
4/4/97	16WS-102I	15 U	10 U	10 U	60 U	90 U	95 U	10 U	10 U	10 U	10 U	10 U	10 U	10 U	10 U	10 U	10 U
4/4/97	16WS-FB01	15 U	10 U	10 U	60 U	90 U	95 U	10 U	7.0 J	10 U	10 U	10 U	10 U	10 U	10 U	39	10 U
4/4/97	16WS-RB01	15 U	10 U	10 U	60 U	90 U	95 U	10 U	6.0 J	10 U	10 U	10 U	10 U	10 U	10 U	33	10 U
4/18/97	16ES-105	21 U	14 U	14 U	84 U	130 U	130 U	14 U	14 U	14 U	14 U	14 U	14 U	14 U	14 U	14 U	14 U
4/18/97	16WS-106E	15 U	10 U	10 U	60 U	90 U	5.0 J	10 U	10 U	10 U	10 U	10 U	10 U	10 U	10 U	10 U	10 U
4/18/97	16WS-106I	15 U	10 U	10 U	60 U	90 U	95 U	10 U	10 U	10 U	10 U	10 U	10 U	10 U	10 U	10 U	10 U
4/19/97	16ES-103	15 U	10 U	10 U	60 U	90 U	95 U	10 U	10 U	10 U	10 U	10 U	10 U	10 U	10 U	10 U	10 U
4/[illegible]97	16WS-103E	15 U	10 U	10 U	60 U	90 U	95 U	[illegible] U	10 U	10 U	10 U	10 U	10 U	10 U	10 U	10 U	[illegible] U

TABLE -
ANALYTICAL RESULTS SUMMARY

Sample Date	Field ID	CIS-1,3-DICHLOROPROPENE	DIBROMOCHLOROMETHANE	DIBROMOMETHANE	DICHLORODIFLUOROMETHANE	ETHYL METHACRYLATE	ETHYLBENZENE	IODOMETHANE	ISOBUTANOL	2-METHYL-2-PROPENENITRILE	METHYL METHACRYLATE	METHYLENE CHLORIDE	PROPIONITRILE	STYRENE	TETRACHLOROETHENE	TOLUENE
2/4/97	16ES-75	10 U	10 U	10 U	10 U	10 U	10 U	5.0 U	2800 U	20 U	20 U	10 U	220 U	10 U	10 U	10 U
2/4/97	16WS-76I	10 U	10 U	10 U	10 U	10 U	10 U	5.0 U	2800 U	20 U	20 U	10 U	220 U	10 U	10 U	10 U
2/5/97	16WS-77E	10 U	10 U	10 U	10 U	10 U	10 U	5.0 U	2800 U	20 U	20 U	10 U	220 U	10 U	10 U	10 U
2/5/97	16WS-77I	10 U	10 U	10 U	10 U	10 U	10 U	5.0 U	2800 U	20 U	20 U	10 U	220 U	10 U	10 U	10 U
2/5/97	16WS-78I	10 U	10 U	10 U	10 U	10 U	10 U	5.0 U	2800 U	20 U	20 U	10 U	220 U	10 U	10 U	10 U
2/19/97	16WS-79I	10 U	10 U	10 U	10 U	10 U	3.0 J	5.0 U	2800 U	20 U	20 U	10 U	220 U	10 U	10 U	4.0 J
2/21/97	16ES-80	10 U	10 U	10 U	10 U	10 U	10 U	5.0 U	2800 U	20 U	20 U	10 U	220 U	10 U	10 U	10 U
2/21/97	16WS-81I	10 U	10 U	10 U	10 U	10 U	10 U	5.0 U	2800 U	20 U	20 U	10 U	220 U	10 U	10 U	10 U
2/21/97	16WS-82E	10 U	10 U	10 U	10 U	10 U	10 U	5.0 U	2800 U	20 U	20 U	10 U	220 U	10 U	10 U	10 U
2/21/97	16WS-82I	10 U	10 U	10 U	10 U	10 U	10 U	5.0 U	2800 U	20 U	20 U	10 U	220 U	10 U	10 U	10 U
2/27/97	16WS-83I	10 U	10 U	10 U	10 U	10 U	10 U	5.0 U	2800 U	20 U	20 U	10 U	220 U	10 U	10 U	10 U
3/7/97	16ES-87	10 U	10 U	10 U	10 U	10 U	10 U	5.0 U	2800 U	20 U	20 U	10 U	220 U	10 U	10 U	10 U
3/7/97	16WS-88E	10 U	10 U	10 U	10 U	10 U	10 U	5.0 U	2800 U	20 U	20 U	10 U	220 U	10 U	10 U	10 U
3/7/97	16WS-88I	10 U	10 U	10 U	10 U	10 U	10 U	5.0 U	2800 U	20 U	20 U	10 U	220 U	10 U	10 U	10 U
3/15/97	16WS89E	10 U	10 U	10 UB	10 UB	10 UB	10 U	5.0 UB	2800 UB	20 UB	20 UB	10 U	220 UB	10 U	10 U	10 U
3/15/97	16WS90E	10 U	10 U	10 UB	10 UB	10 UB	10 U	5.0 UB	2800 UB	20 UB	20 UB	10 U	220 UB	10 U	10 U	10 U
3/16/97	16WS91E	10 U	10 U	10 UB	10 UB	10 UB	10 U	5.0 UB	2800 UB	20 UB	20 UB	10 U	220 UB	10 U	10 U	10 U
3/18/97	16ES-93	10 U	10 U	10 U	10 U	10 U	10 U	5.0 U	2800 U	20 U	20 U	10 U	220 U	10 U	10 U	10 U
3/18/97	16WS92E	10 U	10 U	10 U	10 U	10 U	10 U	5.0 U	2800 U	20 U	20 U	10 U	220 U	10 U	10 U	10 U
3/25/97	16WS-93E	10 U	10 U	10 U	10 U	10 U	10 U	5.0 U	2800 U	20 U	20 U	1.0 J	220 U	10 U	10 U	10 U
3/25/97	16WS-93I	10 U	10 U	10 U	10 U	10 U	10 U	5.0 U	2800 U	20 U	20 U	10 U	220 U	10 U	10 U	10 U
4/3/97	16ES-98	10 U	10 U	10 U	10 U	10 U	10 U	5.0 U	2800 U	20 U	20 U	10 U	220 U	10 U	10 U	10 U
4/3/97	16ES-99	10 U	10 U	10 U	10 U	10 U	10 U	5.0 U	2800 U	20 U	20 U	10 U	220 U	10 U	10 U	10 U
4/3/97	16WS-100I	10 U	10 U	10 U	10 U	10 U	10 U	5.0 U	2800 U	20 U	20 U	10 U	220 U	10 U	10 U	10 U
4/3/97	16WS-101E	10 U	10 U	10 U	10 U	10 U	10 U	5.0 U	2800 U	20 U	20 U	10 U	220 U	10 U	10 U	10 U
4/3/97	16WS-94E	10 U	10 U	10 U	10 U	10 U	10 U	5.0 U	2800 U	20 U	20 U	10 U	220 U	10 U	10 U	10 U
4/3/97	16WS-94I	10 U	10 U	10 U	10 U	10 U	10 U	5.0 U	2800 U	20 U	20 U	10 U	220 U	10 U	10 U	10 U
4/3/97	16WS-96E	10 U	10 U	10 U	10 U	10 U	10 U	5.0 U	2800 U	20 U	20 U	10 U	220 U	10 U	10 U	10 U
4/3/97	16WS-97E	10 U	10 U	10 U	10 U	10 U	10 U	5.0 U	2800 U	20 U	20 U	10 U	220 U	10 U	10 U	10 U
4/3/97	16WS-97I	10 U	10 U	10 U	10 U	10 U	10 U	5.0 U	2800 U	20 U	20 U	10 U	220 U	10 U	10 U	10 U
4/4/97	16ES-102	10 U	10 U	10 U	10 U	10 U	10 U	5.0 U	2800 U	20 U	20 U	10 U	220 U	10 U	10 U	10 U
4/4/97	16WS-102E	10 U	10 U	10 U	10 U	10 U	10 U	5.0 U	2800 U	20 U	20 U	10 U	220 U	10 U	10 U	10 U
4/4/97	16WS-102I	10 U	10 U	10 U	10 U	10 U	10 U	5.0 U	2800 U	20 U	20 U	10 U	220 U	10 U	10 U	10 U
4/4/97	16WS-FB01	10 U	10 U	10 U	10 U	10 U	10 U	5.0 U	2800 U	20 U	20 U	10 U	220 U	10 U	10 U	10 U
4/4/97	16WS-RB01	10 U	10 U	10 U	10 U	10 U	10 U	5.0 U	2800 U	20 U	20 U	10 U	220 U	10 U	10 U	10 U
4/18/97	16ES-105	14 U	14 U	14 U	14 U	14 U	14 U	7.0 U	3900 U	28 U	28 U	14 U	310 U	14 U	14 U	14 U
4/18/97	16WS-106E	10 U	10 U	10 U	2.0 J	10 U	10 U	5.0 U	2800 U	20 U	20 U	1.0 J	22 J	10 U	10 U	10 U
4/18/97	16WS-106I	10 U	10 U	10 U	10 U	10 U	10 U	5.0 U	2800 U	20 U	20 U	10 U	220 U	10 U	10 U	10 U
4/19/97	16ES-103	10 U	10 U	10 U	10 U	10 U	10 U	5.0 U	2800 U	20 U	20 U	10 U	220 U	10 U	10 U	10 U
4/19/97	16WS-103E	10 U	10 U	10 U	10 U	10 U	10 U	5.0 U	2800 U	20 U	20 U	10 U	220 U	10 U	10 U	10 U

TABLE 2
ANALYTICAL RESULTS SUMMARY

Sample Date	Field ID	TRANS-1,3-DICHLOROPROPENE	TRANS-1,4-DICHLORO-2-BUTENE	TRICHLOROETHENE	TRICHLOROFLUOROMETHANE	VINYL ACETATE	VINYL CHLORIDE
2/4/97	16ES-75	10 U	10 U	2.0 J	10 U	10 U	10 U
2/4/97	16WS-76I	10 U	10 U	7.0 J	10 U	10 U	10 U
2/5/97	16WS-77E	10 U	10 U	2.0 J	10 U	10 U	10 U
2/5/97	16WS-77I	10 U	10 U	20	10 U	10 U	10 U
2/5/97	16WS-78I	10 U	10 U	47	10 U	10 U	10 U
2/19/97	16WS-79I	10 U	10 U	10 U	10 U	10 U	10 U
2/21/97	16ES-80	10 U	10 U	16	10 U	10 U	10 U
2/21/97	16WS-81I	10 U	10 U	4.0 J	10 U	10 U	10 U
2/21/97	16WS-82E	10 U	10 U	10 U	10 U	10 U	10 U
2/21/97	16WS-82I	10 U	10 U	26	10 U	10 U	10 U
2/27/97	16WS-83I	10 U	10 U	10	10 U	10 U	10 U
3/7/97	16ES-87	10 U	10 U	45	10 U	10 U	10 U
3/7/97	16WS-88E	10 U	10 U	10 U	10 U	10 U	10 U
3/7/97	16WS-88I	10 U	10 U	10	10 U	10 U	10 U
3/15/97	16WS89E	10 U	10 UB	4.0 J	10 UB	10 UB	10 U
3/15/97	16WS90E	10 U	10 UB	6.0 J	10 UB	10 UB	10 U
3/16/97	16WS91E	10 U	10 UB	6.0 J	10 UB	10 UB	10 U
3/18/97	16ES-93	10 U	10 U	28	10 U	10 U	10 U
3/18/97	16WS92E	10 U	10 U	6.0 J	10 U	10 U	10 U
3/25/97	16WS-93E	10 U	10 U	1.0 J	10 U	10 U	10 U
3/25/97	16WS-93I	10 U	10 U	13	10 U	10 U	10 U
4/3/97	16ES-98	10 U	10 U	130	10 U	10 U	6.0 J
4/3/97	16ES-99	10 U	10 U	96	10 U	10 U	4.0 J
4/3/97	16WS-100I	10 U	10 U	8.0 J	10 U	10 U	10 U
4/3/97	16WS-101E	10 U	10 U	3.0 J	10 U	10 U	10 U
4/3/97	16WS-94E	10 U	10 U	1.0 J	10 U	10 U	10 U
4/3/97	16WS-94I	10 U	10 U	9.0 J	10 U	10 U	10 U
4/3/97	16WS-96E	10 U	10 U	1.0 J	10 U	10 U	10 U
4/3/97	16WS-97E	10 U	10 U	1.0 J	10 U	10 U	10 U
4/3/97	16WS-97I	10 U	10 U	9.0 J	10 U	10 U	10 U
4/4/97	16ES-102	10 U	10 U	110	10 U	10 U	4.0 J
4/4/97	16WS-102E	10 U	10 U	22	10 U	10 U	10 U
4/4/97	16WS-102I	10 U	10 U	100	10 U	10 U	4.0 J
4/4/97	16WS-FB01	10 U	10 U	10 U	10 U	10 U	10 U
4/4/97	16WS-RB01	10 U	10 U	10 U	10 U	10 U	10 U
4/18/97	16ES-105	14 U	14 U	190	14 U	14 U	12 J
4/18/97	16WS-106E	10 U	10 U	2.0 J	10 U	10 U	10 U
4/18/97	16WS-106I	10 U	10 U	6.0 J	10 U	10 U	10 U
4/19/97	16ES-103	10 U	10 U	24	10 U	10 U	2.0 J
4/19/97	16WS-103E	10 U	10 U	1.0 J	10 U	10 U	10 U

TABLE 2
ANALYTICAL RESULTS SUMMARY

Sample Date	Field ID	1,2-DICHLOROETHYLENE (cis & trans)	XYLENES	1,1,1,2-TETRACHLOROETHANE	1,1,1-TRICHLOROETHANE	1,1,2,2-TETRACHLOROETHANE	1,1,2-TRICHLOROETHANE	1,1-DICHLOROETHANE	1,1-DICHLOROETHENE	1,2,3-TRICHLOROPROPANE	1,2-DIBROMO-3-CHLOROPROPANE	1,2-DIBROMOETHANE	1,2-DICHLOROETHANE	1,2-DICHLOROPROPANE	1,4-DIOXANE	2-BUTANONE	2-HEXANONE
4/19/97	16WS-103I	4.0 J	10 U	10 U	10 U	10 U	10 U	10 U	10 U	10 U	10 U	10 U	10 U	10 U	3700 U	10 U	10 U
4/19/97	16WS104E	10 U	10 U	10 U	10 U	10 U	10 U	10 U	10 U	10 U	10 U	10 U	10 U	10 U	3700 U	10 U	10 U
4/21/97	16-ES107	26	10 U	10 U	10 U	10 U	10 U	10 U	3.0 J	10 U	10 U	10 U	10 U	10 U	3700 U	10 U	10 U
4/21/97	16-WS108I	7.0 J	10 U	10 U	10 U	10 U	10 U	10 U	10 U	10 U	10 U	10 U	10 U	10 U	3700 U	10 U	10 U
4/21/97	16-WS109I	8.0 J	10 U	10 U	10 U	10 U	10 U	10 U	10 U	10 U	10 U	10 U	10 U	10 U	3700 U	10 U	10 U
4/21/97	16-WS110E	2.0 J	10 U	10 U	10 U	10 U	10 U	10 U	10 U	10 U	10 U	10 U	10 U	10 U	3700 U	10 U	10 U
4/21/97	16ES104	10	10 U	10 U	10 U	10 U	10 U	10 U	1.0 J	10 U	10 U	10 U	10 U	10 U	3700 U	10 U	10 U
4/21/97	16WS104I	3.0 J	10 U	10 U	10 U	10 U	10 U	10 U	10 U	10 U	10 U	10 U	10 U	10 U	3700 U	10 U	10 U
4/27/97	16-ES111	45	10 U	10 U	10 U	10 U	10 U	10 U	3.0 J	10 U	10 U	10 U	10 U	10 U	3700 U	10 U	10 U
4/27/97	16-WS112E	2.0 J	10 U	10 U	10 U	10 U	10 U	10 U	10 U	10 U	10 U	10 U	10 U	10 U	3700 U	10 U	10 U
4/27/97	16-WS112I	8.0 J	10 U	10 U	10 U	10 U	10 U	10 U	10 U	10 U	10 U	10 U	10 U	10 U	3700 U	10 U	10 U
5/2/97	16-ES116	5.0 J	10 U	10 U	10 U	10 U	10 U	10 U	10 U	10 U	10 U	10 U	10 U	10 U	3700 U	10 U	10 U
5/2/97	16-WS116E	10 U	10 U	10 U	10 U	10 U	10 U	10 U	10 U	10 U	10 U	10 U	10 U	10 U	3700 U	10 U	10 U
5/2/97	16-WS116I	2.0 J	10 U	10 U	10 U	10 U	10 U	10 U	10 U	10 U	10 U	10 U	10 U	10 U	3700 U	10 U	10 U
5/3/97	16-ES117	6.0 J	10 U	10 U	10 U	10 U	10 U	10 U	10 U	10 U	10 U	10 U	10 U	10 U	3700 U	10 U	10 U
5/3/97	16-WS117E	10 U	10 U	10 U	10 U	10 U	10 U	10 U	10 U	10 U	10 U	10 U	10 U	10 U	3700 U	10 U	10 U
5/3/97	16-WS117I	4.0 J	10 U	10 U	10 U	10 U	10 U	10 U	10 U	10 U	10 U	10 U	10 U	10 U	3700 U	10 U	10 U
5/5/97	16ES118	39	10 U	10 U	10 U	10 U	10 U	10 U	3.0 J	10 U	10 U	10 U	10 U	10 U	3700 U	10 U	10 U
5/5/97	16WS118E	2.0 J	10 U	10 U	10 U	10 U	10 U	10 U	10 U	10 U	10 U	10 U	10 U	10 U	3700 U	10 U	10 U
5/5/97	16WS118I	7.0 J	10 U	10 U	10 U	10 U	10 U	10 U	10 U	10 U	10 U	10 U	10 U	10 U	160 J	10 U	10 U
5/6/97	16-ES113	9.0 J	10 U	10 U	10 U	10 U	10 U	10 U	10 U	10 U	10 U	10 U	10 U	10 U	3700 U	10 U	10 U
5/6/97	16-WS114E	10 U	10 U	10 U	10 U	10 U	10 U	10 U	10 U	10 U	10 U	10 U	10 U	10 U	3700 U	10 U	10 U
5/6/97	16-WS114I	3.0 J	10 U	10 U	10 U	10 U	10 U	10 U	10 U	10 U	10 U	10 U	10 U	10 U	3700 U	10 U	10 U
5/6/97	16-WS115I	3.0 J	10 U	10 U	10 U	10 U	10 U	10 U	10 U	10 U	10 U	10 U	10 U	10 U	3700 U	10 U	10 U
5/8/97	16-ES119	11	10 U	10 U	10 U	10 U	10 U	10 U	10 U	10 U	10 U	10 U	10 U	10 U	3700 U	10 U	10 U
5/8/97	16-WS119E	10 U	10 U	10 U	10 U	10 U	10 U	10 U	10 U	10 U	10 U	10 U	10 U	10 U	3700 U	10 U	10 U
5/8/97	16-WS119I	4.0 J	10 U	10 U	10 U	10 U	10 U	10 U	10 U	10 U	10 U	10 U	10 U	10 U	3700 U	10 U	10 U
5/12/97	16-ES120	8.0 J	10 U	10 U	10 U	10 U	10 U	10 U	10 U	10 U	10 U	10 U	10 U	10 U	3700 U	10 U	10 U
5/12/97	16-WS121E	1.0 J	10 U	10 U	10 U	10 U	10 U	10 U	10 U	10 U	10 U	10 U	10 U	10 U	3700 U	10 U	10 U
5/12/97	16-WS121I	4.0 J	10 U	10 U	10 U	10 U	10 U	10 U	10 U	10 U	10 U	10 U	10 U	10 U	3700 U	10 U	10 U
5/12/97	16-WS122E	1.0 J	10 U	10 U	10 U	10 U	10 U	10 U	10 U	10 U	10 U	10 U	10 U	10 U	3700 U	10 U	10 U
5/17/97	ES-123	7.0 J	10 U	10 U	10 U	10 U	10 U	10 U	10 U	10 U	10 U	10 U	10 U	10 U	3700 U	10 U	10 U
5/17/97	WS-123E	5.0 J	10 U	10 U	10 U	10 U	10 U	10 U	10 U	10 U	10 U	10 U	10 U	10 U	3700 U	10 U	10 U
5/17/97	WS-123I	30	10 U	10 U	10 U	10 U	10 U	10 U	10 U	10 U	10 U	10 U	10 U	10 U	3700 U	10 U	10 U
5/25/97	16ES-130	100	10 U	10 U	10 U	10 U	10 U	10 U	6.0 J	10 U	10 U	10 U	10 U	10 U	3700 U	10 U	10 U
5/25/97	16WS-124I	18	10 U	10 U	10 U	10 U	10 U	10 U	10 U	10 U	10 U	10 U	10 U	10 U	3700 U	10 U	10 U
5/25/97	16WS-127E	2.0 J	10 U	10 U	10 U	10 U	10 U	10 U	10 U	10 U	10 U	10 U	10 U	10 U	3700 U	10 U	10 U
5/25/97	16WS-134I	18	10 U	10 U	10 U	10 U	10 U	10 U	10 U	10 U	10 U	10 U	10 U	10 U	3700 U	10 U	10 U
5/25/97	16WS-136E	2.0 J	10 U	10 U	10 U	10 U	10 U	10 U	10 U	10 U	10 U	10 U	10 U	10 U	3700 U	10 U	10 U
5/25/97	16WS-139IF	3.0 J	10 U	10 U	10 U	10 U	10 U	10 U	10 U	10 U	10 U	10 U	10 U	10 U	3700 U	10 U	10 U

TABLE 2
ANALYTICAL RESULTS SUMMARY

Sample Date	Field ID	ALLYL CHLORIDE	4-METHYL-2-PENTANONE	ACETONE	ACETONITRILE	ACROLEIN	ACRYLONITRILE	BENZENE	BROMODICHLOROMETHANE	BROMOFORM	BROMOMETHANE	CARBON DISULFIDE	CARBON TETRACHLORIDE	CHLOROBENZENE	CHLOROETHANE	CHLOROFORM	CHLOROMETHANE
4/19/97	16WS-103I	15 U	10 U	10 U	60 U	90 U	95 U	10 U	10 U	10 U	10 U	10 U	10 U	10 U	10 U	10 U	10 U
4/19/97	16WS104E	15 U	10 U	10 U	60 U	90 U	95 U	10 U	10 U	10 U	10 U	10 U	10 U	10 U	10 U	10 U	10 U
4/21/97	16-ES107	15 U	10 U	16	60 U	90 U	95 U	10 U	10 U	10 U	10 U	10 U	10 U	10 U	10 U	10 U	10 U
4/21/97	16-WS108I	15 U	10 U	10 U	60 U	90 U	95 U	10 U	10 U	10 U	10 U	10 U	10 U	10 U	10 U	10 U	10 U
4/21/97	16-WS109I	15 U	10 U	6.0 JB	60 U	90 U	95 U	10 U	10 U	10 U	10 U	10 U	10 U	10 U	10 U	10 U	10 U
4/21/97	16-WS110E	15 U	10 U	10 U	60 U	90 U	95 U	10 U	10 U	10 U	10 U	10 U	10 U	10 U	10 U	10 U	10 U
4/21/97	16ES104	15 U	10 U	10 U	60 U	90 U	95 U	10 U	10 U	10 U	10 U	10 U	10 U	10 U	10 U	10 U	10 U
4/21/97	16WS104I	15 U	10 U	10 U	60 U	90 U	95 U	10 U	10 U	10 U	10 U	10 U	10 U	10 U	10 U	10 U	10 U
4/27/97	16-ES111	15 U	10 U	10 U	60 U	90 U	95 U	10 U	10 U	10 U	10 U	10 U	10 U	10 U	10 U	10 U	10 U
4/27/97	16-WS112E	15 U	10 U	10 U	60 U	90 U	95 U	10 U	10 U	10 U	10 U	10 U	10 U	10 U	10 U	10 U	10 U
4/27/97	16-WS112I	15 U	10 U	10 U	60 U	90 U	95 U	10 U	10 U	10 U	10 U	10 U	10 U	10 U	10 U	10 U	10 U
5/2/97	16-ES116	15 U	10 U	10 U	60 U	90 U	95 U	10 U	10 U	10 U	10 U	10 U	10 U	10 U	10 U	10 U	10 U
5/2/97	16-WS116E	15 U	10 U	10 U	60 U	90 U	95 U	10 U	10 U	10 U	10 U	10 U	10 U	10 U	10 U	10 U	10 U
5/2/97	16-WS116I	15 U	10 U	10 U	60 U	90 U	95 U	10 U	10 U	10 U	10 U	10 U	10 U	10 U	10 U	10 U	10 U
5/3/97	16-ES117	15 U	10 U	10 U	60 U	90 U	95 U	10 U	10 U	10 U	10 U	10 U	10 U	10 U	10 U	10 U	10 U
5/3/97	16-WS117E	15 U	10 U	10 U	60 U	90 U	95 U	10 U	10 U	10 U	10 U	10 U	10 U	10 U	10 U	10 U	10 U
5/3/97	16-WS117I	15 U	10 U	10 U	60 U	90 U	95 U	10 U	10 U	10 U	10 U	10 U	10 U	10 U	10 U	10 U	10 U
5/5/97	16ES118	15 U	10 U	25	60 U	90 U	95 U	10 U	10 U	10 U	10 U	10 U	10 U	10 U	10 U	10 U	10 U
5/5/97	16WS118E	15 U	10 U	10 U	60 U	90 U	95 U	10 U	10 U	10 U	10 U	10 U	10 U	10 U	10 U	10 U	10 U
5/5/97	16WS118I	15 U	10 U	10 U	60 U	90 U	95 U	10 U	10 U	10 U	10 U	10 U	10 U	10 U	10 U	10 U	10 U
5/6/97	16-ES113	15 U	10 U	10 U	60 U	90 U	95 U	10 U	10 U	10 U	10 U	10 U	10 U	10 U	10 U	10 U	10 U
5/6/97	16-WS114E	15 U	10 U	10 U	60 U	90 U	95 U	10 U	10 U	10 U	10 U	10 U	10 U	10 U	10 U	10 U	10 U
5/6/97	16-WS114I	15 U	10 U	10 U	60 U	90 U	95 U	10 U	10 U	10 U	10 U	10 U	10 U	10 U	10 U	10 U	10 U
5/6/97	16-WS115I	15 U	10 U	10 U	60 U	90 U	95 U	10 U	10 U	10 U	10 U	10 U	10 U	10 U	10 U	10 U	10 U
5/8/97	16-ES119	15 U	10 U	10 U	60 U	90 U	95 U	10 U	10 U	10 U	10 U	10 U	10 U	10 U	10 U	10 U	10 U
5/8/97	16-WS119E	15 U	10 U	10 U	60 U	90 U	95 U	10 U	10 U	10 U	10 U	10 U	10 U	10 U	10 U	10 U	10 U
5/8/97	16-WS119I	15 U	10 U	10 U	60 U	90 U	95 U	10 U	10 U	10 U	10 U	10 U	10 U	10 U	10 U	10 U	10 U
5/12/97	16-ES120	15 U	10 U	10 U	60 U	90 U	95 U	10 U	10 U	10 U	10 U	10 U	10 U	10 U	10 U	10 U	10 U
5/12/97	16-WS121E	15 U	10 U	10 U	60 U	90 U	95 U	10 U	10 U	10 U	10 U	10 U	10 U	10 U	10 U	10 U	10 U
5/12/97	16-WS121I	15 U	10 U	10 U	60 U	90 U	95 U	10 U	10 U	10 U	10 U	10 U	10 U	10 U	10 U	10 U	10 U
5/12/97	16-WS122E	15 U	10 U	10 U	60 U	90 U	95 U	10 U	10 U	10 U	10 U	10 U	10 U	10 U	10 U	10 U	10 U
5/17/97	ES-123	15 U	10 U	10 U	60 U	90 U	95 U	10 U	10 U	10 U	10 U	10 U	10 U	10 U	10 U	10 U	10 U
5/17/97	WS-123E	15 U	10 U	10 U	60 U	90 U	95 U	10 U	10 U	10 U	10 U	10 U	10 U	10 U	10 U	10 U	10 U
5/17/97	WS-123I	15 U	10 U	10 U	60 U	90 U	95 U	10 U	10 U	10 U	10 U	10 U	10 U	10 U	10 U	10 U	10 U
5/25/97	16ES-130	15 U	10 U	10 U	60 U	90 U	95 U	10 U	10 U	10 U	10 U	10 U	10 U	10 U	10 U	10 U	10 U
5/25/97	16WS-124I	15 U	10 U	10 U	60 U	90 U	95 U	10 U	10 U	10 U	10 U	10 U	10 U	10 U	10 U	10 U	10 U
5/25/97	16WS-127E	15 U	10 U	10 U	60 U	90 U	95 U	10 U	10 U	10 U	10 U	10 U	10 U	10 U	10 U	10 U	10 U
5/25/97	16WS-134I	15 U	10 U	10 U	60 U	90 U	95 U	10 U	10 U	10 U	10 U	10 U	10 U	10 U	10 U	10 U	10 U
5/25/97	16WS-136E	15 U	10 U	10 U	60 U	90 U	95 U	10 U	10 U	10 U	10 U	10 U	10 U	10 U	10 U	10 U	10 U
5/[illegible]/97	16WS-139IF	15 U	10 U	10 U	60 U	90 U	95 U	[illegible] U	10 U	10 U	10 U	10 U	10 U	10 U	10 U	10 U	10 U

TABLE _
ANALYTICAL RESULTS SUMMARY

Sample Date	Field ID	CIS-1,3-DICHLOROPROPENE	DIBROMOCHLOROMETHANE	DIBROMOMETHANE	DICHLORODIFLUOROMETHANE	ETHYL METHACRYLATE	ETHYLBENZENE	IODOMETHANE	ISOBUTANOL	2-METHYL-2-PROPENENITRILE	METHYL METHACRYLATE	METHYLENE CHLORIDE	PROPIONITRILE	STYRENE	TETRACHLOROETHENE	TOLUENE
4/19/97	16WS-103I	10 U	10 U	10 U	10 U	10 U	10 U	5.0 U	2800 U	20 U	20 U	10 U	220 U	10 U	10 U	10 U
4/19/97	16WS104E	10 U	10 U	10 U	10 U	10 U	10 U	5.0 U	2800 U	20 U	20 U	10 U	220 U	10 U	10 U	10 U
4/21/97	16-ES107	10 U	10 U	10 U	10 U	10 U	10 U	5.0 U	2800 U	20 U	20 U	1.0 J	220 U	10 U	10 U	10 U
4/21/97	16-WS108I	10 U	10 U	10 U	10 U	10 U	10 U	5.0 U	2800 U	20 U	20 U	10 U	220 U	10 U	10 U	10 U
4/21/97	16-WS109I	10 U	10 U	10 U	10 U	10 U	10 U	5.0 U	2800 U	20 U	20 U	10 U	220 U	10 U	10 U	10 U
4/21/97	16-WS110E	10 U	10 U	10 U	10 U	10 U	10 U	5.0 U	2800 U	20 U	20 U	10 U	220 U	10 U	10 U	10 U
4/21/97	16ES104	10 U	10 U	10 U	10 U	10 U	10 U	5.0 U	2800 U	20 U	20 U	10 U	220 U	10 U	10 U	10 U
4/21/97	16WS104I	10 U	10 U	10 U	10 U	10 U	10 U	5.0 U	2800 U	20 U	20 U	1.0 J	220 U	10 U	10 U	10 U
4/27/97	16-ES111	10 U	10 U	10 U	10 U	10 U	10 U	5.0 U	2800 U	20 U	20 U	10 U	220 U	10 U	10 U	10 U
4/27/97	16-WS112E	10 U	10 U	10 U	10 U	10 U	10 U	5.0 U	2800 U	20 U	20 U	10 U	220 U	10 U	10 U	10 U
4/27/97	16-WS112I	10 U	10 U	10 U	10 U	10 U	10 U	5.0 U	2800 U	20 U	20 U	10 U	220 U	10 U	10 U	10 U
5/2/97	16-ES116	10 U	10 U	10 U	10 U	10 U	10 U	5.0 U	2800 U	20 U	20 U	10 U	220 U	10 U	10 U	10 U
5/2/97	16-WS116E	10 U	10 U	10 U	10 U	10 U	10 U	5.0 U	2800 U	20 U	20 U	10 U	220 U	10 U	10 U	10 U
5/2/97	16-WS116I	10 U	10 U	10 U	10 U	10 U	10 U	5.0 U	2800 U	20 U	20 U	10 U	220 U	10 U	10 U	10 U
5/3/97	16-ES117	10 U	10 U	10 U	10 U	10 U	10 U	5.0 U	2800 U	20 U	20 U	10 U	220 U	10 U	10 U	10 U
5/3/97	16-WS117E	10 U	10 U	10 U	10 U	10 U	10 U	5.0 U	2800 U	20 U	20 U	10 U	220 U	10 U	10 U	10 U
5/3/97	16-WS117I	10 U	10 U	10 U	10 U	10 U	10 U	5.0 U	2800 U	20 U	20 U	10 U	220 U	10 U	10 U	10 U
5/5/97	16ES118	10 U	10 U	10 U	10 U	10 U	10 U	5.0 U	2800 U	20 U	20 U	10 U	220 U	10 U	10 U	10 U
5/5/97	16WS118E	10 U	10 U	10 U	10 U	10 U	10 U	5.0 U	2800 U	20 U	20 U	10 U	220 U	10 U	10 U	10 U
5/5/97	16WS118I	10 U	10 U	10 U	10 U	10 U	10 U	5.0 U	2800 U	20 U	20 U	10 U	220 U	10 U	10 U	10 U
5/6/97	16-ES113	10 U	10 U	10 U	10 U	10 U	10 U	5.0 U	2800 U	20 U	20 U	10 U	220 U	10 U	10 U	10 U
5/6/97	16-WS114E	10 U	10 U	10 U	10 U	10 U	10 U	5.0 U	2800 U	20 U	20 U	10 U	220 U	10 U	10 U	10 U
5/6/97	16-WS114I	10 U	10 U	10 U	10 U	10 U	10 U	5.0 U	2800 U	20 U	20 U	10 U	220 U	10 U	10 U	10 U
5/6/97	16-WS115I	10 U	10 U	10 U	10 U	10 U	10 U	5.0 U	2800 U	20 U	20 U	10 U	220 U	10 U	10 U	10 U
5/8/97	16-ES119	10 U	10 U	10 U	10 U	10 U	10 U	5.0 U	2800 U	20 U	20 U	10 U	220 U	10 U	10 U	10 U
5/8/97	16-WS119E	10 U	10 U	10 U	10 U	10 U	10 U	5.0 U	2800 U	20 U	20 U	10 U	220 U	10 U	10 U	10 U
5/8/97	16-WS119I	10 U	10 U	10 U	10 U	10 U	10 U	5.0 U	2800 U	20 U	20 U	10 U	220 U	10 U	10 U	10 U
5/12/97	16-ES120	10 U	10 U	10 U	10 U	10 U	10 U	5.0 U	2800 U	20 U	20 U	10 U	220 U	10 U	10 U	10 U
5/12/97	16-WS121E	10 U	10 U	10 U	10 U	10 U	10 U	5.0 U	2800 U	20 U	20 U	10 U	220 U	10 U	10 U	10 U
5/12/97	16-WS121I	10 U	10 U	10 U	10 U	10 U	10 U	5.0 U	2800 U	20 U	20 U	10 U	220 U	10 U	10 U	10 U
5/12/97	16-WS122E	10 U	10 U	10 U	10 U	10 U	10 U	5.0 U	2800 U	20 U	20 U	10 U	220 U	10 U	10 U	10 U
5/17/97	ES-123	10 U	10 U	10 U	10 U	10 U	10 U	5.0 U	2800 U	20 U	20 U	10 U	220 U	10 U	10 U	10 U
5/17/97	WS-123E	10 U	10 U	10 U	10 U	10 U	10 U	5.0 U	2800 U	20 U	20 U	1.0 J	220 U	10 U	10 U	10 U
5/17/97	WS-123I	10 U	10 U	10 U	10 U	10 U	10 U	5.0 U	2800 U	20 U	20 U	2.0 J	220 U	10 U	10 U	10 U
5/25/97	16ES-130	10 U	10 U	10 U	10 U	10 U	10 U	5.0 U	2800 U	20 U	20 U	2.0 J	220 U	10 U	2.0 J	10 U
5/25/97	16WS-124I	10 U	10 U	10 U	10 U	10 U	10 U	5.0 U	2800 U	20 U	20 U	2.0 J	220 U	10 U	10 U	10 U
5/25/97	16WS-127E	10 U	10 U	10 U	10 U	10 U	10 U	5.0 U	2800 U	20 U	20 U	10 U	220 U	10 U	10 U	10 U
5/25/97	16WS-134I	10 U	10 U	10 U	10 U	10 U	10 U	5.0 U	2800 U	20 U	20 U	1.0 J	220 U	10 U	10 U	10 U
5/25/97	16WS-136E	10 U	10 U	10 U	10 U	10 U	10 U	5.0 U	2800 U	20 U	20 U	10 U	220 U	10 U	10 U	10 U
5/25/97	16WS-139IF	10 U	10 U	10 U	10 U	10 U	10 U	5.0 U	2800 U	20 U	20 U	10 U	220 U	10 U	10 U	10 U

TABLE 2
ANALYTICAL RESULTS SUMMARY

Sample Date	Field ID	TRANS-1,3-DICHLOROPROPENE	TRANS-1,4-DICHLORO-2-BUTENE	TRICHLOROETHENE	TRICHLOROFLUOROMETHANE	VINYL ACETATE	VINYL CHLORIDE
4/19/97	16WS-103I	10 U	10 U	10	10 U	10 U	10 U
4/19/97	16WS104E	10 U	10 U	1.0 J	10 U	10 U	10 U
4/21/97	16-ES107	10 U	10 U	81	10 U	10 U	6.0 J
4/21/97	16-WS108I	10 U	10 U	15	10 U	10 U	10 U
4/21/97	16-WS109I	10 U	10 U	16	10 U	10 U	10 U
4/21/97	16-WS110E	10 U	10 U	3.0 J	10 U	10 U	10 U
4/21/97	16ES104	10 U	10 U	38	10 U	10 U	2.0 J
4/21/97	16WS104I	10 U	10 U	6.0 J	10 U	10 U	10 U
4/27/97	16-ES111	10 U	10 U	120	10 U	10 U	14+BC188
4/27/97	16-WS112E	10 U	10 U	2.0 J	10 U	10 U	10 U
4/27/97	16-WS112I	10 U	10 U	19	10 U	10 U	10 U
5/2/97	16-ES116	10 U	10 U	7.0 J	10 U	10 U	10 U
5/2/97	16-WS116E	10 U	10 U	1.0 J	10 U	10 U	10 U
5/2/97	16-WS116I	10 U	10 U	8.0 J	10 U	10 U	10 U
5/3/97	16-ES117	10 U	10 U	15	10 U	10 U	10 U
5/3/97	16-WS117E	10 U	10 U	10 U	10 U	10 U	10 U
5/3/97	16-WS117I	10 U	10 U	7.0 J	10 U	10 U	10 U
5/5/97	16ES118	10 U	10 U	84	10 U	10 U	10 U
5/5/97	16WS118E	10 U	10 U	2.0 J	10 U	10 U	10 U
5/5/97	16WS118I	10 U	10 U	13	10 U	10 U	10 U
5/6/97	16-ES113	10 U	10 U	22	10 U	10 U	10 U
5/6/97	16-WS114E	10 U	10 U	10 U	10 U	10 U	10 U
5/6/97	16-WS114I	10 U	10 U	6.0 J	10 U	10 U	10 U
5/6/97	16-WS115I	10 U	10 U	7.0 J	10 U	10 U	10 U
5/8/97	16-ES119	10 U	10 U	30	10 U	10 U	10 U
5/8/97	16-WS119E	10 U	10 U	10 U	10 U	10 U	10 U
5/8/97	16-WS119I	10 U	10 U	5.0 J	10 U	10 U	10 U
5/12/97	16-ES120	10 U	10 U	120	10 U	10 U	10 U
5/12/97	16-WS121E	10 U	10 U	1.0 J	10 U	10 U	10 U
5/12/97	16-WS121I	10 U	10 U	7.0 J	10 U	10 U	10 U
5/12/97	16-WS122E	10 U	10 U	1.0 J	10 U	10 U	10 U
5/17/97	ES-123	10 U	10 U	20	10 U	10 U	10 U
5/17/97	WS-123E	10 U	10 U	3.0 J	10 U	10 U	10 U
5/17/97	WS-123I	10 U	10 U	28	10 U	10 U	10 U
5/25/97	16ES-130	10 U	10 U	150	10 U	10 U	28
5/25/97	16WS-124I	10 U	10 U	24	10 U	10 U	10 U
5/25/97	16WS-127E	10 U	10 U	4.0 J	10 U	10 U	10 U
5/25/97	16WS-134I	10 U	10 U	24	10 U	10 U	10 U
5/25/97	16WS-136E	10 U	10 U	3.0 J	10 U	10 U	10 U
5/25/97	16WS-139IF	10 U	10 U	9.0 J	10 U	10 U	10 U

TABLE 2
ANALYTICAL RESULTS SUMMARY

Sample Date	Field ID	1,2-DICHLOROETHYLENE (cis & trans)	XYLENES	1,1,1,2-TETRACHLOROETHANE	1,1,1-TRICHLOROETHANE	1,1,2,2-TETRACHLOROETHANE	1,1,2-TRICHLOROETHANE	1,1-DICHLOROETHANE	1,1-DICHLOROETHENE	1,2,3-TRICHLOROPROPANE	1,2-DIBROMO-3-CHLOROPROPANE	1,2-DIBROMOETHANE	1,2-DICHLOROETHANE	1,2-DICHLOROPROPANE	1,4-DIOXANE	2-BUTANONE	2-HEXANONE
5/28/97	16ES143	10 U	10 U	10 U	10 U	10 U	10 U	10 U	10 U	10 U	10 U	10 U	10 U	10 U	3700 U	10 U	10 U
5/28/97	16WS142E	11	10 U	10 U	10 U	10 U	10 U	10 U	10 U	10 U	10 U	10 U	10 U	10 U	3700 U	10 U	10 U
5/28/97	16WS142I	34	10 U	10 U	10 U	10 U	10 U	10 U	10 U	10 U	10 U	10 U	10 U	10 U	3700 U	10 U	10 U
5/30/97	16ES144	23	10 U	10 U	10 U	10 U	10 U	10 U	1.0 J	10 U	10 U	10 U	10 U	10 U	3700 U	10 U	10 U
5/30/97	16WS145E	7.0 J	10 U	10 U	10 U	10 U	10 U	10 U	10 U	10 U	10 U	10 U	10 U	10 U	3700 U	10 U	10 U
5/30/97	16WS145I	29	10 U	10 U	10 U	10 U	10 U	10 U	10 U	10 U	10 U	10 U	10 U	10 U	3700 U	10 U	10 U
5/30/97	16WS146I	30	10 U	10 U	10 U	10 U	10 U	10 U	10 U	10 U	10 U	10 U	10 U	10 U	3700 U	10 U	10 U
5/31/97	16ES148	22	10 U	10 U	10 U	10 U	10 U	10 U	10 U	10 U	10 U	10 U	10 U	10 U	3700 U	10 U	10 U
5/31/97	16WS147E	1.0 J	10 U	10 U	10 U	10 U	10 U	10 U	10 U	10 U	10 U	10 U	10 U	10 U	3700 U	10 U	10 U
5/31/97	16WS147I	4.0 J	10 U	10 U	10 U	10 U	10 U	10 U	10 U	10 U	10 U	10 U	10 U	10 U	3700 U	10 U	10 U
6/1/97	16ES150	18	10 U	10 U	10 U	10 U	10 U	10 U	10 U	10 U	10 U	10 U	10 U	10 U	3700 U	10 U	10 U
6/1/97	16WS149E	1.0 J	10 U	10 U	10 U	10 U	10 U	10 U	10 U	10 U	10 U	10 U	10 U	10 U	3700 U	10 U	10 U
6/1/97	16WS149I	4.0 J	10 U	10 U	10 U	10 U	10 U	10 U	10 U	10 U	10 U	10 U	10 U	10 U	3700 U	10 U	10 U
6/6/97	16ES151	9.0 J	10 U	10 U	10 U	10 U	10 U	10 U	10 U	10 U	10 U	10 U	10 U	10 U	3700 U	10 U	10 U
6/6/97	16WS152E	4.0 J	10 U	10 U	10 U	10 U	10 U	10 U	10 U	10 U	10 U	10 U	10 U	10 U	3700 U	10 U	10 U
6/6/97	16WS152I	12	10 U	10 U	10 U	10 U	10 U	10 U	10 U	10 U	10 U	10 U	10 U	10 U	3700 U	10 U	10 U
6/7/97	16ES153	10	10 U	10 U	10 U	10 U	10 U	10 U	10 U	10 U	10 U	10 U	10 U	10 U	3700 U	10 U	10 U
6/7/97	16WS154E	2.0 J	10 U	10 U	10 U	10 U	10 U	10 U	10 U	10 U	10 U	10 U	10 U	10 U	3700 U	10 U	10 U
6/7/97	16WS154I	6.0 J	10 U	10 U	10 U	10 U	10 U	10 U	10 U	10 U	10 U	10 U	10 U	10 U	3700 U	10 U	10 U
6/9/97	16ES156	43	10 U	10 U	10 U	10 U	10 U	10 U	2.0 J	10 U	10 U	10 U	10 U	10 U	3700 U	10 U	10 U
6/9/97	16WS155E	3.0 J	1.0 J	10 U	10 U	10 U	10 U	10 U	1.0 J	10 U	10 U	10 U	10 U	10 U	3700 U	10 U	10 U
6/9/97	16WS155I	18	10 U	10 U	10 U	10 U	10 U	10 U	10 U	10 U	10 U	10 U	10 U	10 U	3700 U	10 U	10 U
6/10/97	16ES157S	7.0 J	4.0 J	30 U	30 U	30 U	30 U	30 U	30 U	30 U	30 U	30 U	30 U	30 U	30 U	30 U	30 U
6/10/97	16F159S	18 U	18 U	18 U	18 U	18 U	18 U	18 U	18 U	18 U	18 U	18 U	18 U	18 U	18 U	18 U	18 U
6/10/97	16WS158S	120	22 U	22 U	22 U	22 U	22 U	22 U	22 U	22 U	22 U	22 U	22 U	22 U	22 U	22 U	22 U
6/13/97	16ES-164	24	10 U	10 U	10 U	10 U	10 U	10 U	1.0 J	10 U	10 U	10 U	10 U	10 U	3700 U	10 U	10 U
6/13/97	16WS-160I	19	1.0 J	10 U	10 U	10 U	10 U	10 U	10 U	10 U	10 U	10 U	10 U	10 U	3700 U	10 U	10 U
6/13/97	16WS-161I	15	10 U	10 U	10 U	10 U	10 U	10 U	10 U	10 U	10 U	10 U	10 U	10 U	3700 U	10 U	10 U
6/13/97	16WS-162E	2.0 J	10 U	10 U	10 U	10 U	10 U	10 U	10 U	10 U	10 U	10 U	10 U	10 U	3700 U	10 U	10 U
6/17/97	16ES-165	16	10 U	10 U	10 U	10 U	10 U	10 U	10 U	10 U	10 U	10 U	10 U	10 U	3700 U	10 U	10 U
6/17/97	16WS-166I	4.0 J	10 U	10 U	10 U	10 U	10 U	10 U	10 U	10 U	10 U	10 U	10 U	10 U	3700 U	10 U	10 U
6/17/97	16WS-167E	10 U	10 U	10 U	10 U	10 U	10 U	10 U	10 U	10 U	10 U	10 U	10 U	10 U	3700 U	10 U	10 U
6/18/97	16ES-168	10	10 U	10 U	10 U	10 U	10 U	10 U	10 U	10 U	10 U	10 U	10 U	10 U	3700 U	10 U	10 U
6/18/97	16WS-169E	10 U	10 U	10 U	10 U	10 U	10 U	10 U	10 U	10 U	10 U	10 U	10 U	10 U	3700 U	10 U	10 U
6/18/97	16WS-169I	3.0 J	10 U	10 U	10 U	10 U	10 U	10 U	10 U	10 U	10 U	10 U	10 U	10 U	3700 U	10 U	10 U
6/21/97	16ES-175	9.0 J	10 U	10 U	10 U	10 U	10 U	10 U	10 U	10 U	10 U	10 U	10 U	10 U	3700 U	10 U	10 U
6/21/97	16WS172I	10	10 U	10 U	10 U	10 U	10 U	10 U	10 U	10 U	10 U	10 U	10 U	10 U	3700 U	10 U	10 U
6/21/97	16WS173I	9.0 J	10 U	10 U	10 U	10 U	10 U	10 U	10 U	10 U	10 U	10 U	10 U	10 U	3700 U	10 U	10 U
6/21/97	16WS174E	3.0 J	10 U	10 U	10 U	10 U	10 U	10 U	10 U	10 U	10 U	10 U	10 U	10 U	3700 U	10 U	10 U
6/22/97	16ES176	8.0 J	10 U	10 U	10 U	10 U	10 U	10 U	25	10 U	10 U	10 U	10 U	10 U	3700 U	10 U	10 U

TABLE _
ANALYTICAL RESULTS SUMMARY

Sample Date	Field ID	ALLYL CHLORIDE	4-METHYL-2-PENTANONE	ACETONE	ACETONITRILE	ACROLEIN	ACRYLONITRILE	BENZENE	BROMODICHLOROMETHANE	BROMOFORM	BROMOMETHANE	CARBON DISULFIDE	CARBON TETRACHLORIDE	CHLOROBENZENE	CHLOROETHANE	CHLOROFORM	CHLOROMETHANE
5/28/97	16ES143	15 U	10 U	10 U	60 U	90 U	95 U	10 U	10 U	10 U	10 U	10 U	10 U	10 U	10 U	10 U	10 U
5/28/97	16WS142E	15 U	10 U	10 U	60 U	90 U	95 U	10 U	10 U	10 U	10 U	10 U	10 U	10 U	10 U	10 U	10 U
5/28/97	16WS142I	15 U	10 U	10 U	60 U	90 U	95 U	10 U	10 U	10 U	10 U	10 U	10 U	10 U	10 U	10 U	10 U
5/30/97	16ES144	15 U	10 U	10 U	60 U	90 U	95 U	10 U	10 U	10 U	10 U	10 U	10 U	10 U	10 U	10 U	10 U
5/30/97	16WS145E	15 U	10 U	10 U	60 U	90 U	95 U	10 U	10 U	10 U	10 U	10 U	10 U	10 U	10 U	10 U	10 U
5/30/97	16WS145I	15 U	10 U	10 U	60 U	90 U	95 U	10 U	10 U	10 U	10 U	10 U	10 U	10 U	10 U	10 U	10 U
5/30/97	16WS146I	15 U	10 U	10 U	60 U	90 U	95 U	10 U	10 U	10 U	10 U	10 U	10 U	10 U	10 U	10 U	10 U
5/31/97	16ES148	15 U	10 U	10 U	60 U	90 U	95 U	10 U	10 U	10 U	10 U	10 U	10 U	10 U	10 U	10 U	10 U
5/31/97	16WS147E	15 U	10 U	10 U	60 U	90 U	95 U	10 U	10 U	10 U	10 U	10 U	10 U	10 U	10 U	10 U	10 U
5/31/97	16WS147I	15 U	10 U	10 U	60 U	90 U	95 U	10 U	10 U	10 U	10 U	10 U	10 U	10 U	10 U	10 U	10 U
6/1/97	16ES150	15 U	10 U	10 U	60 U	90 U	95 U	10 U	10 U	10 U	10 U	10 U	10 U	10 U	10 U	10 U	10 U
6/1/97	16WS149E	15 U	10 U	10 U	60 U	90 U	95 U	10 U	10 U	10 U	10 U	10 U	10 U	10 U	10 U	10 U	10 U
6/1/97	16WS149I	15 U	10 U	10 U	60 U	90 U	95 U	10 U	10 U	10 U	10 U	10 U	10 U	10 U	10 U	10 U	10 U
6/6/97	16ES151	15 U	10 U	10 U	60 U	90 U	95 U	10 U	10 U	10 U	10 U	10 U	10 U	10 U	10 U	10 U	10 U
6/6/97	16WS152E	15 U	10 U	10 U	60 U	90 U	95 U	10 U	10 U	10 U	10 U	10 U	10 U	10 U	10 U	10 U	10 U
6/6/97	16WS152I	15 U	10 U	10 U	60 U	90 U	95 U	10 U	10 U	10 U	10 U	10 U	10 U	10 U	10 U	10 U	10 U
6/7/97	16ES153	15 U	10 U	10 U	60 U	90 U	95 U	10 U	10 U	10 U	10 U	10 U	10 U	10 U	10 U	10 U	10 U
6/7/97	16WS154E	15 U	10 U	10 U	60 U	90 U	95 U	10 U	10 U	10 U	10 U	10 U	10 U	10 U	10 U	10 U	10 U
6/7/97	16WS154I	15 U	10 U	10 U	60 U	90 U	95 U	10 U	10 U	10 U	10 U	10 U	10 U	10 U	10 U	10 U	10 U
6/9/97	16ES156	15 U	10 U	10 U	60 U	90 U	95 U	10 U	10 U	10 U	10 U	10 U	10 U	10 U	10 U	10 U	10 U
6/9/97	16WS155E	15 U	10 U	10 U	60 U	90 U	95 U	10 U	10 U	10 U	10 U	10 U	10 U	10 U	10 U	10 U	10 U
6/9/97	16WS155I	15 U	10 U	10 U	60 U	90 U	95 U	10 U	10 U	10 U	10 U	10 U	10 U	10 U	10 U	10 U	10 U
6/10/97	16ES157S	30 U	30 U	33 B	30 U	30 U	30 U	30 U	30 U	30 U	30 U	30 U	30 U	30 U	30 U	30 U	30 U
6/10/97	16F159S	18 U	18 U	73	18 U	18 U	18 U	18 U	18 U	18 U	18 U	18 U	18 U	18 U	18 U	18 U	18 U
6/10/97	16WS158S	22 U	22 U	73	22 U	22 U	22 U	22 U	22 U	22 U	22 U	22 U	22 U	22 U	22 U	22 U	22 U
6/13/97	16ES-164	15 U	10 U	7.0 JB	60 U	90 U	95 U	10 U	10 U	10 U	10 U	10 U	10 U	10 U	10 U	10 U	10 U
6/13/97	16WS-160I	15 U	10 U	10 U	60 U	90 U	95 U	10 U	10 U	10 U	10 U	10 U	10 U	10 U	10 U	10 U	10 U
6/13/97	16WS-161I	15 U	10 U	10 U	60 U	90 U	95 U	10 U	10 U	10 U	10 U	10 U	10 U	10 U	10 U	10 U	10 U
6/13/97	16WS-162E	15 U	10 U	10 U	60 U	90 U	95 U	10 U	10 U	10 U	10 U	10 U	10 U	10 U	10 U	10 U	10 U
6/17/97	16ES-165	15 U	10 U	10 U	60 U	90 U	95 U	10 U	10 U	10 U	10 U	10 U	10 U	10 U	10 U	10 U	10 U
6/17/97	16WS-166I	15 U	10 U	10 U	60 U	90 U	95 U	10 U	10 U	10 U	10 U	10 U	10 U	10 U	10 U	10 U	10 U
6/17/97	16WS-167E	15 U	10 U	10 U	60 U	90 U	95 U	10 U	10 U	10 U	10 U	10 U	10 U	10 U	10 U	10 U	10 U
6/18/97	16ES-168	15 U	10 U	10 U	60 U	90 U	95 U	10 U	10 U	10 U	10 U	10 U	10 U	10 U	10 U	10 U	10 U
6/18/97	16WS-169E	15 U	10 U	26	60 U	90 U	95 U	10 U	10 U	10 U	10 U	10 U	10 U	10 U	10 U	10 U	10 U
6/18/97	16WS-169I	15 U	10 U	10 U	60 U	90 U	95 U	10 U	10 U	10 U	10 U	10 U	10 U	10 U	10 U	10 U	10 U
6/21/97	16ES-175	15 U	10 U	10 U	60 U	90 U	95 U	10 U	10 U	10 U	10 U	10 U	10 U	10 U	10 U	10 U	10 U
6/21/97	16WS172I	15 U	10 U	10 U	60 U	90 U	95 U	10 U	10 U	10 U	10 U	10 U	10 U	10 U	10 U	10 U	10 U
6/21/97	16WS173I	15 U	10 U	10 U	60 U	90 U	95 U	10 U	10 U	10 U	10 U	10 U	10 U	10 U	10 U	10 U	10 U
6/21/97	16WS174E	15 U	10 U	10 U	60 U	90 U	95 U	10 U	10 U	10 U	10 U	10 U	10 U	10 U	10 U	10 U	10 U
6/[illegible]/97	16ES176	15 U	10 U	10 U	60 U	90 U	95 U	15	10 U	10 U	10 U	10 U	10 U	13	10 U	10 U	10 U

TAB.
ANALYTICAL RESULTS SUMMARY

Sample Date	Field ID	CIS-1,3-DICHLOROPROPENE	DIBROMOCHLOROMETHANE	DIBROMOMETHANE	DICHLORODIFLUOROMETHANE	ETHYL METHACRYLATE	ETHYLBENZENE	IODOMETHANE	ISOBUTANOL	2-METHYL-2-PROPENENITRILE	METHYL METHACRYLATE	METHYLENE CHLORIDE	PROPIONITRILE	STYRENE	TETRACHLOROETHENE	TOLUENE
5/28/97	16ES143	10 U	10 U	10 U	10 U	10 U	10 U	5.0 U	2800 U	20 U	20 U	5.0 J	220 U	10 U	10 U	10 U
5/28/97	16WS142E	10 U	10 U	10 U	10 U	10 U	10 U	5.0 U	2800 U	20 U	20 U	10 U	220 U	10 U	10 U	10 U
5/28/97	16WS142I	10 U	10 U	10 U	10 U	10 U	10 U	5.0 U	37 JB	20 U	20 U	10 U	220 U	10 U	10 U	10 U
5/30/97	16ES144	10 U	10 U	10 U	10 U	10 U	10 U	5.0 U	2800 U	20 U	20 U	10 U	220 U	10 U	10 U	10 U
5/30/97	16WS145E	10 U	10 U	10 U	10 U	10 U	10 U	5.0 U	2800 U	20 U	20 U	10 U	220 U	10 U	10 U	10 U
5/30/97	16WS145I	10 U	10 U	10 U	10 U	10 U	10 U	5.0 U	2800 U	20 U	20 U	10 U	220 U	10 U	10 U	10 U
5/30/97	16WS146I	10 U	10 U	10 U	10 U	10 U	10 U	5.0 U	2800 U	20 U	20 U	10 U	220 U	10 U	10 U	10 U
5/31/97	16ES148	10 U	10 U	10 U	10 U	10 U	10 U	5.0 U	2800 U	20 U	20 U	10 U	220 U	10 U	10 U	10 U
5/31/97	16WS147E	10 U	10 U	10 U	10 U	10 U	10 U	5.0 U	2800 U	20 U	20 U	10 U	220 U	10 U	10 U	10 U
5/31/97	16WS147I	10 U	10 U	10 U	10 U	10 U	10 U	5.0 U	2800 U	20 U	20 U	10 U	220 U	10 U	10 U	10 U
6/1/97	16ES150	10 U	10 U	10 U	10 U	10 U	10 U	5.0 U	2800 U	20 U	20 U	10 U	220 U	10 U	10 U	10 U
6/1/97	16WS149E	10 U	10 U	10 U	10 U	10 U	10 U	5.0 U	2800 U	20 U	20 U	10 U	220 U	10 U	10 U	10 U
6/1/97	16WS149I	10 U	10 U	10 U	10 U	10 U	10 U	5.0 U	2800 U	20 U	20 U	10 U	220 U	10 U	10 U	10 U
6/6/97	16ES151	10 U	10 U	10 U	10 U	10 U	10 U	5.0 U	2800 U	20 U	20 U	10 U	220 U	10 U	10 U	10 U
6/6/97	16WS152E	10 U	10 U	10 U	10 U	10 U	10 U	5.0 U	2800 U	20 U	20 U	10 U	220 U	10 U	10 U	10 U
6/6/97	16WS152I	10 U	10 U	10 U	10 U	10 U	10 U	5.0 U	2800 U	20 U	20 U	1.0 J	220 U	10 U	10 U	10 U
6/7/97	16ES153	10 U	10 U	10 U	10 U	10 U	10 U	5.0 U	2800 U	20 U	20 U	10 U	220 U	10 U	10 U	10 U
6/7/97	16WS154E	10 U	10 U	10 U	10 U	10 U	10 U	5.0 U	2800 U	20 U	20 U	2.0 J	220 U	10 U	10 U	10 U
6/7/97	16WS154I	10 U	10 U	10 U	10 U	10 U	10 U	5.0 U	2800 U	20 U	20 U	10 U	220 U	10 U	10 U	10 U
6/9/97	16ES156	10 U	10 U	10 U	10 U	10 U	10 U	5.0 U	2800 U	20 U	20 U	1.0 J	220 U	10 U	10 U	10 U
6/9/97	16WS155E	10 U	10 U	10 U	10 U	10 U	10 U	5.0 U	2800 U	20 U	20 U	2.0 JB	220 U	10 U	1.0 J	10 U
6/9/97	16WS155I	10 U	10 U	10 U	10 U	10 U	10 U	5.0 U	2800 U	20 U	20 U	2.0 J	220 U	10 U	10 U	10 U
6/10/97	16ES157S	30 U	30 U	30 U	30 U	30 U	30 U	30 U	600	30 U	30 U	23 JB	30 U	30 U	30 U	14 J
6/10/97	16F159S	18 U	18 U	18 U	18 U	18 U	18 U	18 U	18 U	18 U	18 U	6.0 JB	18 U	18 U	18 U	2.0 J
6/10/97	16WS158S	22 U	22 U	22 U	22 U	22 U	22 U	22 U	22 U	22 U	22 U	7.0 JB	22 U	22 U	22 U	22 U
6/13/97	16ES-164	10 U	10 U	10 U	10 U	10 U	10 U	5.0 U	2800 U	20 U	20 U	7.0 JB	220 U	10 U	10 U	10 U
6/13/97	16WS-160I	10 U	10 U	10 U	10 U	10 U	10 U	5.0 U	2800 U	20 U	20 U	10 U	220 U	10 U	10 U	10 U
6/13/97	16WS-161I	10 U	10 U	10 U	10 U	10 U	10 U	5.0 U	2800 U	20 U	20 U	10 U	220 U	10 U	10 U	10 U
6/13/97	16WS-162E	10 U	10 U	10 U	10 U	10 U	10 U	5.0 U	2800 U	20 U	20 U	10 U	220 U	10 U	10 U	10 U
6/17/97	16ES-165	10 U	10 U	10 U	10 U	10 U	10 U	5.0 U	2800 U	20 U	20 U	4.0 JB	220 U	10 U	10 U	10 U
6/17/97	16WS-166I	10 U	10 U	10 U	10 U	10 U	10 U	5.0 U	2800 U	20 U	20 U	4.0 JB	220 U	10 U	10 U	10 U
6/17/97	16WS-167E	10 U	10 U	10 U	10 U	10 U	10 U	5.0 U	2800 U	20 U	20 U	3.0 JB	220 U	10 U	10 U	10 U
6/18/97	16ES-168	10 U	10 U	10 U	10 U	10 U	10 U	5.0 U	2800 U	20 U	20 U	10 U	220 U	10 U	10 U	10 U
6/18/97	16WS-169E	10 U	10 U	10 U	10 U	10 U	10 U	5.0 U	2800 U	20 U	20 U	10 U	220 U	10 U	10 U	10 U
6/18/97	16WS-169I	10 U	10 U	10 U	10 U	10 U	10 U	5.0 U	2800 U	20 U	20 U	10 U	220 U	10 U	10 U	10 U
6/21/97	16ES-175	10 U	10 U	10 U	10 U	10 U	10 U	5.0 U	2800 U	20 U	20 U	3.0 JB	220 U	10 U	10 U	10 U
6/21/97	16WS172I	10 U	10 U	10 U	10 U	10 U	10 U	5.0 U	2800 U	20 U	20 U	2.0 JB	220 U	10 U	10 U	10 U
6/21/97	16WS173I	10 U	10 U	10 U	10 U	10 U	10 U	5.0 U	2800 U	20 U	20 U	4.0 JB	220 U	10 U	10 U	10 U
6/21/97	16WS174E	10 U	10 U	10 U	10 U	10 U	10 U	5.0 U	2800 U	20 U	20 U	1.0 JB	220 U	10 U	10 U	10 U
6/22/97	16ES176	10 U	10 U	10 U	10 U	10 U	10 U	5.0 U	2800 U	20 U	20 U	2.0 JB	220 U	10 U	10 U	16

TABLE
ANALYTICAL RESULTS SUMMARY

Sample Date	Field ID	TRANS-1,3-DICHLOROPROPENE	TRANS-1,4-DICHLORO-2-BUTENE	TRICHLOROETHENE	TRICHLOROFLUOROMETHANE	VINYL ACETATE	VINYL CHLORIDE
5/28/97	16ES143	10 U	10 U	10 U	10 U	10 U	10 U
5/28/97	16WS142E	10 U	10 U	7.0 J	10 U	10 U	10 U
5/28/97	16WS142I	10 U	10 U	29	10 U	10 U	7.0 J
5/30/97	16ES144	10 U	10 U	25	10 U	10 U	5.0 J
5/30/97	16WS145E	10 U	10 U	6.0 J	10 U	10 U	10 U
5/30/97	16WS145I	10 U	10 U	25	10 U	10 U	5.0 J
5/30/97	16WS146I	10 U	10 U	25	10 U	10 U	5.0 J
5/31/97	16ES148	10 U	10 U	18	10 U	10 U	6.0 J
5/31/97	16WS147E	10 U	10 U	1.0 J	10 U	10 U	10 U
5/31/97	16WS147I	10 U	10 U	6.0 J	10 U	10 U	10 U
6/1/97	16ES150	10 U	10 U	27	10 U	10 U	4.0 J
6/1/97	16WS149E	10 U	10 U	2.0 J	10 U	10 U	10 U
6/1/97	16WS149I	10 U	10 U	6.0 J	10 U	10 U	10 U
6/6/97	16ES151	10 U	10 U	15	10 U	10 U	10 U
6/6/97	16WS152E	10 U	10 U	3.0 J	10 U	10 U	10 U
6/6/97	16WS152I	10 U	10 U	12	10 U	10 U	10 U
6/7/97	16ES153	10 U	10 U	18	10 U	10 U	10 U
6/7/97	16WS154E	10 U	10 U	2.0 J	10 U	10 U	10 U
6/7/97	16WS154I	10 U	10 U	8.0 J	10 U	10 U	10 U
6/9/97	16ES156	10 U	10 U	37	10 U	10 U	20
6/9/97	16WS155E	10 U	10 U	3.0 J	10 U	10 U	10 U
6/9/97	16WS155I	10 U	10 U	16	10 U	10 U	5.0 J
6/10/97	16ES157S	30 U	30 U	30 U	30 U	30 U	250
6/10/97	16F159S	18 U	18 U	18 U	18 U	18 U	20
6/10/97	16WS158S	22 U	22 U	14 J	22 U	22 U	15 J
6/13/97	16ES-164	10 U	10 U	17	10 U	10 U	8.0 J
6/13/97	16WS-160I	10 U	10 U	16	10 U	10 U	10 U
6/13/97	16WS-161I	10 U	10 U	16	10 U	10 U	10 U
6/13/97	16WS-162E	10 U	10 U	2.0 J	10 U	10 U	10 U
6/17/97	16ES-165	10 U	10 U	15	10 U	10 U	10 U
6/17/97	16WS-166I	10 U	10 U	12	10 U	10 U	10 U
6/17/97	16WS-167E	10 U	10 U	1.0 J	10 U	10 U	10 U
6/18/97	16ES-168	10 U	10 U	8.0 J	10 U	10 U	10 U
6/18/97	16WS-169E	10 U	10 U	1.0 J	10 U	10 U	10 U
6/18/97	16WS-169I	10 U	10 U	7.0 J	10 U	10 U	10 U
6/21/97	16ES-175	10 U	10 U	5.0 J	10 U	10 U	3.0 J
6/21/97	16WS172I	10 U	10 U	8.0 J	10 U	10 U	10 U
6/21/97	16WS173I	10 U	10 U	8.0 J	10 U	10 U	10 U
6/21/97	16WS174E	10 U	10 U	1.0 J	10 U	10 U	10 U
6/22/97	16ES176	10 U	10 U	21	10 U	10 U	3.0 J

TABLE 2
ANALYTICAL RESULTS SUMMARY

Sample Date	Field ID	1,2-DICHLOROETHYLENE (cis & trans)	XYLENES	1,1,1,2-TETRACHLOROETHANE	1,1,1-TRICHLOROETHANE	1,1,2,2-TETRACHLOROETHANE	1,1,2-TRICHLOROETHANE	1,1-DICHLOROETHANE	1,1-DICHLOROETHENE	1,2,3-TRICHLOROPROPANE	1,2-DIBROMO-3-CHLOROPROPANE	1,2-DIBROMOETHANE	1,2-DICHLOROETHANE	1,2-DICHLOROPROPANE	1,4-DIOXANE	2-BUTANONE	2-HEXANONE
6/22/97	16WS177E	1.0 J	10 U	10 U	10 U	10 U	10 U	10 U	10 U	10 U	10 U	10 U	10 U	10 U	3700 U	10 U	10 U
6/22/97	16WS177I	7.0 J	10 U	10 U	10 U	10 U	10 U	10 U	10 U	10 U	10 U	10 U	10 U	10 U	3700 U	10 U	10 U
6/26/97	16ES-178	14	10 U	10 U	10 U	10 U	10 U	10 U	10 U	10 U	10 U	10 U	10 U	10 U	3700 U	10 U	10 U
6/26/97	16WS-179E	10 U	10 U	10 U	10 U	10 U	10 U	10 U	10 U	10 U	10 U	10 U	10 U	10 U	3700 U	10 U	10 U
6/26/97	16WS-179I	6.0 J	10 U	10 U	10 U	10 U	10 U	10 U	10 U	10 U	10 U	10 U	10 U	10 U	3700 U	29	10 U
6/30/97	16ES178	84	10 U	10 U	10 U	10 U	10 U	10 U	4.0 J	10 U	10 U	10 U	10 U	10 U	3700 U	10 U	10 U
6/30/97	16WS179E	10 U	10 U	10 U	10 U	10 U	10 U	10 U	10 U	10 U	10 U	10 U	10 U	10 U	3700 U	10 U	10 U
6/30/97	16WS179I	6.0 J	10 U	10 U	10 U	10 U	10 U	10 U	10 U	10 U	10 U	10 U	10 U	10 U	3700 U	10 U	10 U
6/30/97	16WS180I	6.0 J	10 U	10 U	10 U	10 U	10 U	10 U	10 U	10 U	10 U	10 U	10 U	10 U	3700 U	10 U	10 U
7/14/97	16ES182	84	10 U	10 U	10 U	10 U	10 U	10 U	5.0 J	10 U	10 U	10 U	10 U	10 U	3700 U	10 U	10 U
7/14/97	16WS181E	10 U	10 U	10 U	10 U	10 U	10 U	10 U	10 U	10 U	10 U	10 U	10 U	10 U	3700 U	10 U	10 U
7/14/97	16WS181I	15	10 U	10 U	10 U	10 U	10 U	10 U	10 U	10 U	10 U	10 U	10 U	10 U	3700 U	110	10 U
7/21/97	16ES183	26	10 U	10 U	10 U	10 U	10 U	10 U	2.0 J	10 U	10 U	10 U	10 U	10 U	3700 U	10 U	10 U
7/21/97	16WS184E	10 U	10 U	10 U	10 U	10 U	10 U	10 U	10 U	10 U	10 U	10 U	10 U	10 U	3700 U	10 U	10 U
7/21/97	16WS184I	8.0 J	10 U	10 U	10 U	10 U	10 U	10 U	10 U	10 U	10 U	10 U	10 U	10 U	3700 U	37	10 U
7/21/97	16WS185I	7.0 J	10 U	10 U	10 U	10 U	10 U	10 U	10 U	10 U	10 U	10 U	10 U	10 U	3700 U	36	10 U
8/8/97	16ES186	7.0 J	10 U	10 U	10 U	10 U	10 U	10 U	10 U	10 U	10 U	10 U	10 U	10 U	3700 U	120	10 U
8/8/97	16WS187E	10 U	10 U	10 U	10 U	10 U	10 U	10 U	10 U	10 U	10 U	10 U	10 U	10 U	3700 U	10 U	10 U
8/8/97	16WS187I	7.0 J	10 U	10 U	10 U	10 U	10 U	10 U	10 U	10 U	10 U	10 U	10 U	10 U	3700 U	120	10 U
8/10/97	16ES190	28	10 U	10 U	10 U	10 U	10 U	10 U	1.0 J	10 U	10 U	10 U	10 U	10 U	3700 U	10 U	10 U
8/10/97	16WS191E	13	10 U	10 U	10 U	10 U	10 U	10 U	10 U	10 U	10 U	10 U	10 U	10 U	3700 U	10 U	10 U
8/10/97	16WS191I	52	10 U	10 U	10 U	10 U	10 U	10 U	10 U	10 U	10 U	10 U	10 U	10 U	3700 U	10 U	10 U
8/12/97	16ES192	32	10 U	10 U	10 U	10 U	10 U	10 U	1.0 J	10 U	10 U	10 U	10 U	10 U	3700 U	10 U	10 U
8/12/97	16WS193E	7.0 J	10 U	10 U	10 U	10 U	10 U	10 U	10 U	10 U	10 U	10 U	10 U	10 U	3700 U	10 U	10 U
8/12/97	16WS193I	44	10 U	10 U	10 U	10 U	10 U	10 U	10 U	10 U	10 U	10 U	10 U	10 U	3700 U	10 U	10 U
8/12/97	16WS194I	44	10 U	10 U	10 U	10 U	10 U	10 U	10 U	10 U	10 U	10 U	10 U	10 U	3700 U	10 U	10 U
8/13/97	16ES195	22	10 U	10 U	10 U	10 U	10 U	10 U	10 U	10 U	10 U	10 U	10 U	10 U	3700 U	10 U	10 U
8/13/97	16WS196I	7.0 J	2.0 J	10 U	10 U	10 U	10 U	10 U	10 U	10 U	10 U	10 U	10 U	10 U	3700 U	10 U	10 U
8/13/97	16WS197E	10 U	10 U	10 U	10 U	10 U	10 U	10 U	10 U	10 U	10 U	10 U	10 U	10 U	3700 U	10 U	10 U
8/15/97	16ES198	17	10 U	10 U	10 U	10 U	10 U	10 U	10 U	10 U	10 U	10 U	10 U	10 U	3700 U	10 U	10 U
8/15/97	16WS199E	4.0 J	1.0 J	10 U	10 U	10 U	10 U	10 U	10 U	10 U	10 U	10 U	10 U	10 U	3700 U	10 U	10 U
8/15/97	16WS199I	6.0 J	3.0 J	20 U	20 U	20 U	20 U	20 U	20 U	20 U	20 U	20 U	20 U	20 U	7400 U	20 U	20 U
8/17/97	16ES200	6.0 J	13	10 U	10 U	10 U	10 U	10 U	10 U	10 U	10 U	10 U	10 U	10 U	3700 U	10 U	10 U
8/17/97	16WS201E	2.0 J	3.0 J	10 U	10 U	10 U	10 U	10 U	10 U	10 U	10 U	10 U	10 U	10 U	3700 U	10 U	10 U
8/17/97	16WS201I	5.0 J	7.0 J	10 U	10 U	10 U	10 U	10 U	10 U	10 U	10 U	10 U	10 U	10 U	3700 U	10 U	10 U
9/9/97	16ES206	10	10 U	10 U	10 U	10 U	10 U	10 U	10 U	10 U	10 U	10 U	10 U	10 U	3700 U	10 U	10 U
9/9/97	16WS207E	10 U	10 U	10 U	10 U	10 U	10 U	10 U	10 U	10 U	10 U	10 U	10 U	10 U	3700 U	10 U	10 U
9/9/97	16WS207I	15	10 U	10 U	10 U	10 U	10 U	10 U	10 U	10 U	10 U	10 U	10 U	10 U	3700 U	10 U	10 U
9/16/97	16-ES209	7.0 J	10 U	10 U	10 U	10 U	10 U	10 U	10 U	10 U	10 U	10 U	10 U	10 U	3700 U	10 U	10 U
9/16/97	16-WS208E	2.0 J	10 U	10 U	10 U	10 U	10 U	10 U	10 U	10 U	10 U	10 U	10 U	10 U	3700 U	10 U	10 U

TABLE
ANALYTICAL RESULTS SUMMARY

Sample Date	Field ID	ALLYL CHLORIDE	4-METHYL-2-PENTANONE	ACETONE	ACETONITRILE	ACROLEIN	ACRYLONITRILE	BENZENE	BROMODICHLOROMETHANE	BROMOFORM	BROMOMETHANE	CARBON DISULFIDE	CARBON TETRACHLORIDE	CHLOROBENZENE	CHLOROETHANE	CHLOROFORM	CHLOROMETHANE
6/22/97	16WS177E	15 U	10 U	10 U	60 U	90 U	95 U	10 U	10 U	10 U	10 U	10 U	10 U	10 U	10 U	10 U	10 U
6/22/97	16WS177I	15 U	10 U	10 U	60 U	90 U	95 U	10 U	10 U	10 U	10 U	10 U	10 U	10 U	10 U	10 U	10 U
6/26/97	16ES-178	15 U	10 U	10 U	60 U	90 U	95 U	10 U	10 U	10 U	10 U	10 U	10 U	10 U	10 U	10 U	10 U
6/26/97	16WS-179E	15 U	10 U	10 U	60 U	90 U	95 U	10 U	10 U	10 U	10 U	10 U	10 U	10 U	10 U	10 U	10 U
6/26/97	16WS-179I	15 U	10 U	10 U	60 U	90 U	95 U	10 U	10 U	10 U	10 U	10 U	10 U	10 U	10 U	10 U	10 U
6/30/97	16ES178	15 U	10 U	10 U	60 U	90 U	95 U	10 U	10 U	10 U	10 U	10 U	10 U	10 U	10 U	10 U	10 U
6/30/97	16WS179E	15 U	10 U	10 U	60 U	90 U	95 U	10 U	10 U	10 U	10 U	10 U	10 U	10 U	10 U	10 U	10 U
6/30/97	16WS179I	15 U	10 U	10 U	60 U	90 U	95 U	10 U	10 U	10 U	10 U	10 U	10 U	10 U	10 U	10 U	10 U
6/30/97	16WS180I	15 U	10 U	10 U	60 U	90 U	95 U	10 U	10 U	10 U	10 U	10 U	10 U	10 U	10 U	10 U	10 U
7/14/97	16ES182	15 U	10 U	20	60 U	90 U	95 U	10 U	10 U	10 U	10 U	10 U	10 U	10 U	10 U	10 U	10 U
7/14/97	16WS181E	15 U	10 U	10 U	60 U	90 U	95 U	10 U	10 U	10 U	10 U	10 U	10 U	10 U	10 U	10 U	10 U
7/14/97	16WS181I	15 U	10 U	14	60 U	90 U	95 U	10 U	10 U	10 U	10 U	10 U	10 U	10 U	10 U	10 U	10 U
7/21/97	16ES183	15 U	10 U	10 U	60 U	90 U	95 U	10 U	10 U	10 U	10 U	10 U	10 U	10 U	10 U	10 U	10 U
7/21/97	16WS184E	15 U	10 U	10 U	60 U	90 U	95 U	10 U	10 U	10 U	10 U	10 U	10 U	10 U	10 U	10 U	10 U
7/21/97	16WS184I	15 U	10 U	9.0 J	60 U	90 U	95 U	10 U	10 U	10 U	10 U	10 U	10 U	10 U	10 U	10 U	10 U
7/21/97	16WS185I	15 U	10 U	10 U	60 U	90 U	95 U	10 U	10 U	10 U	10 U	10 U	10 U	10 U	10 U	10 U	10 U
8/8/97	16ES186	15 U	10 U	10 U	60 U	90 U	95 U	10 U	10 U	10 U	10 U	10 U	10 U	10 U	10 U	10 U	10 U
8/8/97	16WS187E	15 U	10 U	10 U	60 U	90 U	95 U	10 U	10 U	10 U	10 U	10 U	10 U	10 U	10 U	10 U	10 U
8/8/97	16WS187I	15 U	10 U	10	60 U	90 U	95 U	10 U	10 U	10 U	10 U	10 U	10 U	10 U	10 U	10 U	10 U
8/10/97	16ES190	15 U	10 U	10 U	60 U	90 U	95 U	10 U	10 U	10 U	10 U	10 U	10 U	10 U	10 U	10 U	10 U
8/10/97	16WS191E	15 U	10 U	10 U	60 U	90 U	95 U	10 U	10 U	10 U	10 U	10 U	10 U	10 U	10 U	10 U	10 U
8/10/97	16WS191I	15 U	10 U	10 U	60 U	90 U	95 U	10 U	10 U	10 U	10 U	10 U	10 U	10 U	10 U	10 U	10 U
8/12/97	16ES192	15 U	10 U	10 U	60 U	90 U	95 U	10 U	10 U	10 U	10 U	10 U	10 U	10 U	10 U	10 U	10 U
8/12/97	16WS193E	15 U	10 U	10 U	60 U	90 U	95 U	10 U	10 U	10 U	10 U	10 U	10 U	10 U	10 U	10 U	10 U
8/12/97	16WS193I	15 U	10 U	10 U	60 U	90 U	95 U	10 U	10 U	10 U	10 U	10 U	10 U	10 U	10 U	10 U	10 U
8/12/97	16WS194I	15 U	10 U	10 U	60 U	90 U	95 U	10 U	10 U	10 U	10 U	10 U	10 U	10 U	10 U	10 U	10 U
8/13/97	16ES195	15 U	10 U	10 U	60 U	90 U	95 U	10 U	10 U	10 U	10 U	10 U	10 U	10 U	10 U	10 U	10 U
8/13/97	16WS196I	15 U	3.0 J	10 U	60 U	90 U	95 U	10 U	10 U	10 U	10 U	10 U	10 U	10 U	10 U	10 U	10 U
8/13/97	16WS197E	15 U	4.0 J	10 U	60 U	90 U	95 U	10 U	10 U	10 U	10 U	10 U	10 U	10 U	10 U	10 U	10 U
8/15/97	16ES198	15 U	10 U	10 U	60 U	90 U	95 U	10 U	10 U	10 U	10 U	10 U	10 U	10 U	10 U	10 U	10 U
8/15/97	16WS199E	15 U	10 U	10 U	60 U	90 U	95 U	10 U	10 U	10 U	10 U	10 U	10 U	10 U	10 U	10 U	10 U
8/15/97	16WS199I	30 U	20 U	20 U	120 U	180 U	190 U	20 U	20 U	20 U	20 U	20 U	20 U	20 U	20 U	20 U	20 U
8/17/97	16ES200	15 U	10 U	10 U	60 U	90 U	95 U	6.0 J	10 U	10 U	10 U	10 U	10 U	10 U	10 U	10 U	10 U
8/17/97	16WS201E	15 U	10 U	10 U	60 U	90 U	95 U	1.0 J	10 U	10 U	10 U	10 U	10 U	10 U	10 U	10 U	10 U
8/17/97	16WS201I	15 U	10 U	10 U	60 U	90 U	95 U	2.0 J	10 U	10 U	10 U	10 U	10 U	10 U	10 U	10 U	10 U
9/9/97	16ES206	15 U	10 U	10 U	60 U	90 U	95 U	10 U	10 U	10 U	10 U	10 U	10 U	10 U	10 U	10 U	10 U
9/9/97	16WS207E	15 U	10 U	10 U	60 U	90 U	95 U	10 U	10 U	10 U	10 U	10 U	10 U	10 U	10 U	10 U	10 U
9/9/97	16WS207I	15 U	10 U	10 U	60 U	90 U	95 U	10 U	10 U	10 U	10 U	10 U	10 U	10 U	10 U	10 U	10 U
9/16/97	16-ES209	15 U	10 U	10 U	60 U	90 U	95 U	10 U	10 U	10 U	10 U	10 U	10 U	10 U	10 U	10 U	10 U
9/16/97	16-WS208E	15 U	10 U	10 U	60 U	90 U	95 U	10 U	10 U	10 U	10 U	10 U	10 U	10 U	10 U	10 U	10 U

TAB.
ANALYTICAL RESULTS SUMMARY

Sample Date	Field ID	CIS-1,3-DICHLOROPROPENE	DIBROMOCHLOROMETHANE	DIBROMOMETHANE	DICHLORODIFLUOROMETHANE	ETHYL METHACRYLATE	ETHYLBENZENE	IODOMETHANE	ISOBUTANOL	2-METHYL-2-PROPENENITRILE	METHYL METHACRYLATE	METHYLENE CHLORIDE	PROPIONITRILE	STYRENE	TETRACHLOROETHENE	TOLUENE
6/22/97	16WS177E	10 U	10 U	10 U	10 U	10 U	10 U	5.0 U	2800 U	20 U	20 U	10 U	220 U	10 U	10 U	10 U
6/22/97	16WS177I	10 U	10 U	10 U	10 U	10 U	10 U	5.0 U	2800 U	20 U	20 U	9.0 JB	220 U	10 U	10 U	10 U
6/26/97	16ES-178	10 U	10 U	10 U	10 U	10 U	10 U	5.0 U	2800 U	20 U	20 U	10 U	220 U	10 U	10 U	10 U
6/26/97	16WS-179E	10 U	10 U	10 U	10 U	10 U	10 U	5.0 U	2800 U	20 U	20 U	1.0 JB	220 U	10 U	10 U	10 U
6/26/97	16WS-179I	10 U	10 U	10 U	10 U	10 U	10 U	5.0 U	2800 U	20 U	20 U	10 U	220 U	10 U	10 U	10 U
6/30/97	16ES178	10 U	10 U	10 U	10 U	10 U	10 U	5.0 U	2800 U	20 U	20 U	1.0 J	220 U	10 U	10 U	10 U
6/30/97	16WS179E	10 U	10 U	10 U	10 U	10 U	10 U	5.0 U	2800 U	20 U	20 U	2.0 J	220 U	10 U	10 U	10 U
6/30/97	16WS179I	10 U	10 U	10 U	10 U	10 U	10 U	5.0 U	2800 U	20 U	20 U	10 U	220 U	10 U	10 U	10 U
6/30/97	16WS180I	10 U	10 U	10 U	10 U	10 U	10 U	5.0 U	2800 U	20 U	20 U	10 U	220 U	10 U	10 U	10 U
7/14/97	16ES182	10 U	10 U	10 U	10 U	10 U	10 U	5.0 U	2800 U	20 U	20 U	10 U	220 U	10 U	10 U	10 U
7/14/97	16WS181E	10 U	10 U	10 U	10 U	10 U	10 U	5.0 U	2800 U	20 U	20 U	2.0 J	220 U	10 U	10 U	10 U
7/14/97	16WS181I	10 U	10 U	10 U	10 U	10 U	10 U	5.0 U	2800 U	20 U	20 U	2.0 J	220 U	10 U	10 U	10 U
7/21/97	16ES183	10 U	10 U	10 U	10 U	10 U	10 U	5.0 U	2800 U	20 U	20 U	10 U	220 U	10 U	10 U	10 U
7/21/97	16WS184E	10 U	10 U	10 U	10 U	10 U	10 U	5.0 U	2800 U	20 U	20 U	3.0 J	220 U	10 U	10 U	10 U
7/21/97	16WS184I	10 U	10 U	10 U	10 U	10 U	10 U	5.0 U	2800 U	20 U	20 U	3.0 J	220 U	10 U	10 U	10 U
7/21/97	16WS185I	10 U	10 U	10 U	10 U	10 U	10 U	5.0 U	2800 U	20 U	20 U	3.0 J	220 U	10 U	10 U	10 U
8/8/97	16ES186	10 U	10 U	10 U	10 U	10 U	10 U	5.0 U	2800 U	20 U	20 U	2.0 J	220 U	10 U	10 U	10 U
8/8/97	16WS187E	10 U	10 U	10 U	10 U	10 U	10 U	5.0 U	2800 U	20 U	20 U	1.0 J	220 U	10 U	10 U	10 U
8/8/97	16WS187I	10 U	10 U	10 U	10 U	10 U	10 U	5.0 U	2800 U	20 U	20 U	10 U	220 U	10 U	10 U	10 U
8/10/97	16ES190	10 U	10 U	10 U	10 U	10 U	10 U	5.0 U	2800 U	20 U	20 U	10 U	220 U	10 U	10 U	10 U
8/10/97	16WS191E	10 U	10 U	10 U	10 U	10 U	10 U	5.0 U	2800 U	20 U	20 U	1.0 J	220 U	10 U	10 U	10 U
8/10/97	16WS191I	10 U	10 U	10 U	10 U	10 U	10 U	5.0 U	2800 U	20 U	20 U	10 U	220 U	10 U	10 U	10 U
8/12/97	16ES192	10 U	10 U	10 U	10 U	10 U	10 U	5.0 U	2800 U	20 U	20 U	2.0 J	220 U	10 U	10 U	10 U
8/12/97	16WS193E	10 U	10 U	10 U	10 U	10 U	10 U	5.0 U	2800 U	20 U	20 U	1.0 J	220 U	10 U	10 U	10 U
8/12/97	16WS193I	10 U	10 U	10 U	10 U	10 U	10 U	5.0 U	2800 U	20 U	20 U	2.0 J	220 U	10 U	10 U	2.0 J
8/12/97	16WS194I	10 U	10 U	10 U	10 U	10 U	10 U	5.0 U	2800 U	20 U	20 U	1.0 J	220 U	10 U	10 U	2.0 J
8/13/97	16ES195	10 U	10 U	10 U	10 U	10 U	10 U	5.0 U	2800 U	20 U	20 U	3.0 J	220 U	10 U	10 U	10 U
8/13/97	16WS196I	10 U	10 U	10 U	10 U	10 U	10 U	5.0 U	2800 U	20 U	20 U	10 U	220 U	10 U	10 U	140
8/13/97	16WS197E	10 U	10 U	10 U	10 U	10 U	10 U	5.0 U	2800 U	20 U	20 U	1.0 J	220 U	10 U	10 U	13
8/15/97	16ES198	10 U	10 U	10 U	10 U	10 U	10 U	5.0 U	2800 U	20 U	20 U	10 U	220 U	10 U	10 U	10 U
8/15/97	16WS199E	10 U	10 U	10 U	10 U	10 U	10 U	5.0 U	2800 U	20 U	20 U	10 U	220 U	10 U	10 U	110
8/15/97	16WS199I	20 U	20 U	20 U	20 U	20 U	20 U	10 U	5600 U	40 U	40 U	20 U	440 U	20 U	20 U	230
8/17/97	16ES200	10 U	10 U	10 U	10 U	10 U	2.0 J	5.0 U	2800 U	20 U	20 U	10 U	220 U	10 U	10 U	20
8/17/97	16WS201E	10 U	10 U	10 U	10 U	10 U	10 U	5.0 U	2800 U	20 U	20 U	10 U	220 U	10 U	10 U	8.0 J
8/17/97	16WS201I	10 U	10 U	10 U	10 U	10 U	1.0 J	5.0 U	2800 U	20 U	20 U	10 U	220 U	10 U	10 U	16
9/9/97	16ES206	10 U	10 U	10 U	10 U	10 U	10 U	5.0 U	2800 U	20 U	20 U	1.0 JB	220 U	10 U	10 U	10 U
9/9/97	16WS207E	10 U	10 U	10 U	10 U	10 U	10 U	5.0 U	2800 U	20 U	20 U	1.0 JB	220 U	10 U	10 U	10 U
9/9/97	16WS207I	10 U	10 U	10 U	10 U	10 U	10 U	5.0 U	2800 U	20 U	20 U	1.0 JB	220 U	10 U	10 U	10 U
9/16/97	16-ES209	10 U	10 U	10 U	10 U	10 U	10 U	5.0 U	2800 U	20 U	20 U	3.0 JB	220 U	10 U	10 U	10 U
9/16/97	16-WS208E	10 U	10 U	10 U	10 U	10 U	10 U	5.0 U	2800 U	20 U	20 U	3.0 JB	220 U	10 U	10 U	10 U

TABLE 2
ANALYTICAL RESULTS SUMMARY

Sample Date	Field ID	TRANS-1,3-DICHLOROPROPENE	TRANS-1,4-DICHLORO-2-BUTENE	TRICHLOROETHENE	TRICHLOROFLUOROMETHANE	VINYL ACETATE	VINYL CHLORIDE
6/22/97	16WS177E	10 U	10 U	10 U	10 U	10 U	10 U
6/22/97	16WS177I	10 U	10 U	6.0 J	10 U	10 U	10 U
6/26/97	16ES-178	10 U	10 U	9.0 J	10 U	10 U	10 U
6/26/97	16WS-179E	10 U	10 U	10 U	10 U	10 U	10 U
6/26/97	16WS-179I	10 U	10 U	10	10 U	10 U	10 U
6/30/97	16ES178	10 U	10 U	30	10 U	10 U	44
6/30/97	16WS179E	10 U	10 U	10 U	10 U	10 U	10 U
6/30/97	16WS179I	10 U	10 U	12	10 U	10 U	10 U
6/30/97	16WS180I	10 U	10 U	11	10 U	10 U	10 U
7/14/97	16ES182	10 U	10 U	26	10 U	10 U	74
7/14/97	16WS181E	10 U	10 U	10 U	10 U	10 U	10 U
7/14/97	16WS181I	10 U	10 U	15	10 U	10 U	10 U
7/21/97	16ES183	10 U	10 U	9.0 J	10 U	10 U	20
7/21/97	16WS184E	10 U	10 U	10 U	10 U	10 U	10 U
7/21/97	16WS184I	10 U	10 U	13	10 U	10 U	10 U
7/21/97	16WS185I	10 U	10 U	12	10 U	10 U	10 U
8/8/97	16ES186	10 U	10 U	15	10 U	10 U	10 U
8/8/97	16WS187E	10 U	10 U	2.0 J	10 U	10 U	10 U
8/8/97	16WS187I	10 U	10 U	15	10 U	10 U	10 U
8/10/97	16ES190	10 U	10 U	9.0 J	10 U	10 U	15
8/10/97	16WS191E	10 U	10 U	6.0 J	10 U	10 U	1.0 J
8/10/97	16WS191I	10 U	10 U	33	10 U	10 U	15
8/12/97	16ES192	10 U	10 U	10	10 U	10 U	29
8/12/97	16WS193E	10 U	10 U	4.0 J	10 U	10 U	10 U
8/12/97	16WS193I	10 U	10 U	34	10 U	10 U	25
8/12/97	16WS194I	10 U	10 U	34	10 U	10 U	24
8/13/97	16ES195	10 U	10 U	93	10 U	10 U	23
8/13/97	16WS196I	10 U	10 U	8.0 J	10 U	10 U	10 U
8/13/97	16WS197E	10 U	10 U	10 U	10 U	10 U	10 U
8/15/97	16ES198	10 U	10 U	20	10 U	10 U	36
8/15/97	16WS199E	10 U	10 U	3.0 J	10 U	10 U	10 U
8/15/97	16WS199I	20 U	20 U	8.0 J	20 U	20 U	20 U
8/17/97	16ES200	10 U	10 U	7.0 J	10 U	10 U	6.0 J
8/17/97	16WS201E	10 U	10 U	5.0 J	10 U	10 U	10 U
8/17/97	16WS201I	10 U	10 U	10	10 U	10 U	3.0 J
9/9/97	16ES206	10 U	10 U	8.0 J	10 U	10 U	11
9/9/97	16WS207E	10 U	10 U	10 U	10 U	10 U	10 U
9/9/97	16WS207I	10 U	10 U	18	10 U	10 U	5.0 J
9/16/97	16-ES209	10 U	10 U	6.0 J	10 U	10 U	6.0 J
9[illegible]/97	16-WS208E	10 U	10 U	2.0 J	10 U	10 U	10 U

TABLE
ANALYTICAL RESULTS SUMMARY

Sample Date	Field ID	1,2-DICHLOROETHYLENE (cis & trans)	XYLENES	1,1,1,2-TETRACHLOROETHANE	1,1,1-TRICHLOROETHANE	1,1,2,2-TETRACHLOROETHANE	1,1,2-TRICHLOROETHANE	1,1-DICHLOROETHANE	1,1-DICHLOROETHENE	1,2,3-TRICHLOROPROPANE	1,2-DIBROMO-3-CHLOROPROPANE	1,2-DIBROMOETHANE	1,2-DICHLOROETHANE	1,2-DICHLOROPROPANE	1,4-DIOXANE	2-BUTANONE	2-HEXANONE
9/16/97	16-WS208I	12	10 U	10 U	10 U	10 U	10 U	10 U	10 U	10 U	10 U	10 U	10 U	10 U	3700 U	10 U	10 U
9/23/97	16-ES210	10 U	10 U	10 U	10 U	10 U	10 U	10 U	10 U	10 U	10 U	10 U	10 U	10 U	3700 U	10 U	10 U
9/23/97	16-WS211E	6.0 J	10 U	10 U	10 U	10 U	10 U	10 U	10 U	10 U	10 U	10 U	10 U	10 U	3700 U	10 U	10 U
9/23/97	16-WS212I	10 U	10 U	10 U	10 U	10 U	10 U	10 U	10 U	10 U	10 U	10 U	10 U	10 U	3700 U	10 U	10 U

Unit of Measure = ug/L
NA = Not Analyzed
Data Qualifiers
B= Analyte detected in blank
D= Value reported from diluted analysis
J= Estimated value below quantitation limit
U= Not detected

TABLE 2
ANALYTICAL RESULTS SUMMARY

Sample Date	Field ID	ALLYL CHLORIDE	4-METHYL-2-PENTANONE	ACETONE	ACETONITRILE	ACROLEIN	ACRYLONITRILE	BENZENE	BROMODICHLOROMETHANE	BROMOFORM	BROMOMETHANE	CARBON DISULFIDE	CARBON TETRACHLORIDE	CHLOROBENZENE	CHLOROETHANE	CHLOROFORM	CHLOROMETHANE
9/16/97	16-WS208I	15 U	10 U	10 U	60 U	90 U	95 U	10 U	10 U	10 U	10 U	10 U	10 U	10 U	10 U	10 U	10 U
9/23/97	16-ES210	15 U	10 U	12	60 U	90 U	95 U	10 U	1.0 J	10 U	10 U	10 U	10 U	10 U	10 U	10	10 U
9/23/97	16-WS211E	15 U	10 U	10 U	60 U	90 U	95 U	10 U	10 U	10 U	10 U	10 U	10 U	10 U	10 U	10 U	10 U
9/23/97	16-WS212I	15 U	10 U	10 U	60 U	90 U	95 U	10 U	10 U	10 U	10 U	10 U	10 U	10 U	10 U	2.0 J	10 U

Unit of Measure = ug/L
NA = Not Analyzed
Data Qualifiers
B= Analyte detected in blank
D= Value reported from diluted a
J= Estimated value below quantil
U= Not detected

TABLE 2
ANALYTICAL RESULTS SUMMARY

Sample Date	Field ID	CIS-1,3-DICHLOROPROPENE	DIBROMOCHLOROMETHANE	DIBROMOMETHANE	DICHLORODIFLUOROMETHANE	ETHYL METHACRYLATE	ETHYLBENZENE	IODOMETHANE	ISOBUTANOL	2-METHYL-2-PROPENENITRILE	METHYL METHACRYLATE	METHYLENE CHLORIDE	PROPIONITRILE	STYRENE	TETRACHLOROETHENE	TOLUENE
9/16/97	16-WS208I	10 U	10 U	10 U	10 U	10 U	10 U	5.0 U	2800 U	20 U	20 U	4.0 JB	220 U	10 U	10 U	10 U
9/23/97	16-ES210	10 U	10 U	10 U	10 U	10 U	10 U	5.0 U	2800 U	20 U	20 U	4.0 JB	220 U	10 U	10 U	10 U
9/23/97	16-WS211E	10 U	10 U	10 U	10 U	10 U	10 U	5.0 U	2800 U	20 U	20 U	4.0 JB	220 U	10 U	10 U	10 U
9/23/97	16-WS212I	10 U	10 U	10 U	10 U	10 U	10 U	5.0 U	2800 U	20 U	20 U	4.0 JB	220 U	10 U	10 U	10 U

Unit of Measure = ug/L
NA = Not Analyzed
Data Qualifiers
B= Analyte detected in blank
D= Value reported from diluted a
J= Estimated value below quantit
U= Not detected

TABLE 2
ANALYTICAL RESULTS SUMMARY

Sample Date	Field ID	TRANS-1,3-DICHLOROPROPENE	TRANS-1,4-DICHLORO-2-BUTENE	TRICHLOROETHENE	TRICHLOROFLUOROMETHANE	VINYL ACETATE	VINYL CHLORIDE
9/16/97	16-WS208I	10 U	10 U	10 U	10 U	10 U	10 U
9/23/97	16-ES210	10 U	10 U	1.0 J	10 U	10 U	10 U
9/23/97	16-WS211E	10 U	10 U	10 U	10 U	10 U	10 U
9/23/97	16-WS212I	10 U	10 U	7.0 J	10 U	10 U	10 U

Unit of Measure = ug/L
NA = Not Analyzed
Data Qualifiers
B= Analyte detected in blank
D= Value reported from diluted a
J= Estimated value below quantit
U= Not detected

TABLE 3
TRIP BLANK ANALYTICAL RESULTS SUMMARY

Sample Date	Field ID	1,2-DICHLOROETHYLENE(cis&trans)	XYLENE	1,1,1,2-TETRACHLOROETHANE	1,1,1-TRICHLOROETHANE	1,1,2,2-TETRACHLOROETHANE	1,1,2-TRICHLOROETHANE	1,1-DICHLOROETHANE	1,1-DICHLOROETHENE	1,2,3-TRICHLOROPROPANE	1,2-DIBROMO-3-CHLOROPROPANE	1,2-DIBROMOETHANE	1,2-DICHLOROETHANE	1,2-DICHLOROPROPANE	1,4-DIOXANE	2-BUTANONE	2-HEXANONE	ALLYL CHLORIDE	4-METHYL-2-PENTANONE
2/7/96	16-16TB10	10 U	10 U	10 U	10 U	10 U	10 U	10 U	10 U	10 U	10 U	10 U	10 U	10 U	3700 U	10 U	10 U	15 U	10 U
2/8/96	16-16TB09	10 U	10 U	10 U	10 U	10 U	10 U	10 U	10 U	10 U	10 U	10 U	10 U	10 U	3700 U	10 U	10 U	15 U	10 U
2/8/96	16-16TB11	10 U	10 U	10 U	10 U	10 U	10 U	10 U	10 U	10 U	10 U	10 U	10 U	10 U	3700 U	10 U	10 U	15 U	10 U
2/8/96	16-16TB12	10 U	10 U	10 U	10 U	10 U	10 U	10 U	10 U	10 U	10 U	10 U	10 U	10 U	3700 U	10 U	10 U	15 U	10 U
3/28/96	16-16TB25	10 U	10 U	NA	10 U	10 U	10 U	10 U	10 U	NA	NA	NA	10 U	10 U	NA	10 U	10 U	NA	10 U
4/15/96	2608DTB26	10 U	10 U	NA	10 U	10 U	10 U	10 U	10 U	NA	NA	NA	10 U	10 U	NA	10 U	10 U	NA	10 U
5/28/96	16-WSTB29	10 U	10 U	10 U	10 U	10 U	10 U	10 U	10 U	10 U	10 U	10 U	10 U	10 U	10 U	10 U	10 U	10 U	10 U
5/30/96	16WSTB-30	10 U	10 U	10 U	10 U	10 U	10 U	10 U	10 U	10 U	10 U	10 U	10 U	10 U	10 U	10 U	10 U	10 U	10 U
6/3/96	WS0TB30	10 U	10 U	10 U	10 U	10 U	10 U	10 U	10 U	10 U	10 U	10 U	10 U	10 U	10 U	10 U	10 U	10 U	10 U
6/7/96	16WSTB31	10 U	10 U	10 U	10 U	10 U	10 U	10 U	10 U	10 U	10 U	10 U	10 U	10 U	10 U	10 U	10 U	10 U	10 U
6/9/96	16WSTB-32	10 U	10 U	10 U	10 U	10 U	10 U	10 U	10 U	10 U	10 U	10 U	10 U	10 U	10 U	10 U	10 U	10 U	10 U
6/11/96	16WSTB33	10 U	10 U	10 U	10 U	10 U	10 U	10 U	10 U	10 U	10 U	10 U	10 U	10 U	10 U	10 U	10 U	10 U	10 U
6/17/96	16WSTB34	10 U	10 U	10 U	10 U	10 U	10 U	10 U	10 U	10 U	10 U	10 U	10 U	10 U	10 U	10 U	10 U	10 U	10 U
7/9/96	16WSTB37	10 U	10 U	10 U	10 U	10 U	10 U	10 U	10 U	10 U	10 U	10 U	10 U	10 U	10 U	10 U	10 U	10 U	10 U
7/22/96	1616TB38	10 U	10 U	10 U	10 U	10 U	10 U	10 U	10 U	10 U	10 U	10 U	10 U	10 U	3700 U	10 U	10 U	15 U	10 U
7/25/96	16WSTB39	10 U	10 U	10 U	10 U	10 U	10 U	10 U	10 U	10 U	10 U	10 U	10 U	10 U	3700 U	10 U	10 U	15 U	10 U
7/31/96	16WSTB40	10 U	10 U	10 U	10 U	10 U	10 U	10 U	10 U	10 U	10 U	10 U	10 U	10 U	3700 U	10 U	10 U	15 U	10 U
9/9/96	16WS-TB42	10 U	10 U	10 U	10 U	10 U	10 U	10 U	10 U	10 U	10 U	10 U	10 U	10 U	10 U	10 U	10 U	10 U	10 U
9/16/96	16WS-TB43	10 U	10 U	10 U	10 U	10 U	10 U	10 U	10 U	10 U	10 U	10 U	10 U	10 U	3700 U	10 U	10 U	15 U	10 U
10/22/96	16WS-TB46	10 U	10 U	10 U	10 U	10 U	10 U	10 U	10 U	10 U	10 U	10 U	10 U	10 U	3700 U	10 U	10 U	15 U	10 U
11/7/96	16WS-TB	10 U	10 U	10 U	10 U	10 U	10 U	10 U	10 U	10 U	10 U	10 U	10 U	10 U	3700 U	10 U	10 U	15 U	10 U
11/8/96	16WS-TB47	10 U	10 U	10 U	10 U	10 U	10 U	10 U	10 U	10 U	10 U	10 U	10 U	10 U	3700 U	10 U	10 U	15 U	10 U
11/12/96	16WS-TB48	10 U	10 U	10 U	10 U	10 U	10 U	10 U	10 U	10 U	10 U	10 U	10 U	10 U	3700 U	10 U	10 U	15 U	10 U
11/25/96	16WS-TB49	10 U	10 U	10 U	10 U	10 U	10 U	10 U	10 U	10 U	10 U	10 U	10 U	10 U	3700 U	10 U	10 U	15 U	10 U
12/12/96	16WS-TB52	10 U	10 U	10 U	10 U	10 U	10 U	10 U	10 U	10 U	10 U	10 U	10 U	10 U	10 U	10 U	10 U	10 U	10 U
12/17/96	16WS-TB53	10 U	10 U	10 U	10 U	10 U	10 U	10 U	10 U	10 U	10 U	10 U	10 U	10 U	10 U	10 U	10 U	10 U	10 U
12/27/96	16WS-TB55	10 U	10 U	10 U	10 U	10 U	10 U	10 U	10 U	10 U	10 U	10 U	10 U	10 U	3700 U	10 U	10 U	15 U	10 U
1/13/97	16WS-TB56	10 U	10 U	10 U	10 U	10 U	10 U	10 U	10 U	10 U	10 U	10 U	10 U	10 U	31 J	10 U	10 U	15 U	10 U
1/17/97	16-WSTB57	10 U	10 U	10 U	10 U	10 U	10 U	10 U	10 U	10 U	10 U	10 U	10 U	10 U	3700 U	10 U	10 U	15 U	10 U
1/21/97	16WS-TB58	10 U	10 U	10 U	10 U	10 U	10 U	10 U	10 U	10 U	10 U	10 U	10 U	10 U	3700 U	10 U	10 U	15 U	10 U
1/22/97	16WS-TB59	10 U	10 U	10 U	10 U	10 U	10 U	10 U	10 U	10 U	10 U	10 U	10 U	10 U	3700 U	10 U	10 U	15 U	10 U
1/22/97	16WS-TB60	10 U	10 U	10 U	10 U	10 U	10 U	10 U	10 U	10 U	10 U	10 U	10 U	10 U	3700 U	10 U	10 U	15 U	10 U
1/27/97	16WS-TB61	10 U	10 U	10 U	10 U	10 U	10 U	10 U	10 U	10 U	10 U	10 U	10 U	10 U	3700 U	10 U	10 U	15 U	10 U
2/4/97	16WS-TB62	10 U	10 U	10 U	10 U	10 U	10 U	10 U	10 U	10 U	10 U	10 U	10 U	10 U	3700 U	10 U	10 U	15 U	10 U
2/19/97	0211-TB64	10 U	10 U	10 U	10 U	10 U	10 U	10 U	10 U	10 U	10 U	10 U	10 U	10 U	3700 U	10 U	10 U	15 U	10 U
2/19/97	16WS-TB63	10 U	10 U	10 U	10 U	10 U	10 U	10 U	10 U	10 U	10 U	10 U	10 U	10 U	3700 U	10 U	10 U	15 U	10 U
2/21/97	16WS-TB65	10 U	10 U	10 U	10 U	10 U	10 U	10 U	10 U	10 U	10 U	10 U	10 U	10 U	3700 U	10 U	10 U	15 U	10 U
3/7/97	16WS-TB68	10 U	10 U	10 U	10 U	10 U	10 U	10 U	10 U	10 U	10 U	10 U	10 U	10 U	3700 U	10 U	10 U	15 U	10 U
3/15/97	16WSTB69	10 U	10 U	10 UB	10 U	10 U	10 U	10 U	10 U	10 UB	10 UB	10 UB	10 U	10 U	3700 UB	10 UB	10 UB	15 UB	10 UB
3/18/97	16WSTB70	10 U	10 U	10 U	10 U	10 U	10 U	10 U	10 U	10 U	10 U	10 U	10 U	10 U	3700 U	10 U	10 U	15 U	10 U
3/26/97	16WS-TB71	10 U	10 U	10 U	10 U	10 U	10 U	10 U	10 U	10 U	10 U	10 U	10 U	10 U	3700 U	10 U	10 U	15 U	10 U
4/3/97	16WS-TB72	10 U	10 U	10 U	10 U	10 U	10 U	10 U	10 U	10 U	10 U	10 U	10 U	10 U	3700 U	10 U	10 U	15 U	10 U
4/3/97	16WS-TB73	10 U	10 U	10 U	10 U	10 U	10 U	10 U	10 U	10 U	10 U	10 U	10 U	10 U	3700 U	10 U	10 U	15 U	10 U
4/3/97	16WS-TB74	10 U	10 U	10 U	10 U	10 U	10 U	10 U	10 U	10 U	10 U	10 U	10 U	10 U	3700 U	10 U	10 U	15 U	10 U
4/4/97	16WS-TB75	10 U	10 U	10 U	10 U	10 U	10 U	10 U	10 U	10 U	10 U	10 U	10 U	10 U	3700 U	10 U	10 U	15 U	10 U

TABLE 3
TRIP BLANK ANALYTICAL RESULTS SUMMARY

Sample Date	Field ID	ACETONE	ACETONITRILE	ACROLEIN	ACRYLONITRILE	BENZENE	BROMODICHLOROMETHANE	BROMOFORM	BROMOMETHANE	CARBON DISULFIDE	CARBON TETRACHLORIDE	CHLOROBENZENE	CHLOROETHANE	CHLOROFORM	CHLOROMETHANE	CIS-1,3-DICHLOROPROPENE	DIBROMOCHLOROMETHANE	DIBROMOMETHANE	DICHLORODIFLUOROMETHANE
2/7/96	16-16TB10	10 U	60 U	90 U	95 U	10 U	10 U	10 U	10 U	10 U	10 U	10 U	10 U	10 U	10 U	10 U	10 U	10 U	10 U
2/8/96	16-16TB09	10 U	60 U	90 U	95 U	10 U	10 U	10 U	10 U	10 U	10 U	10 U	10 U	10 U	10 U	10 U	10 U	10 U	10 U
2/8/96	16-16TB11	10 U	60 U	90 U	95 U	10 U	10 U	10 U	10 U	10 U	10 U	10 U	10 U	10 U	10 U	10 U	10 U	10 U	10 U
2/8/96	16-16TB12	10 U	60 U	90 U	95 U	10 U	10 U	10 U	10 U	10 U	10 U	10 U	10 U	10 U	10 U	10 U	10 U	10 U	10 U
3/28/96	16-16TB25	10 U	NA	NA	NA	10 U	10 U	10 U	10 U	10 U	10 U	10 U	10 U	10 U	10 U	10 U	10 U	NA	NA
4/15/96	2608DTB26	10 U	NA	NA	NA	10 U	10 U	10 U	10 U	10 U	10 U	10 U	10 U	10 U	10 U	10 U	10 U	NA	NA
5/28/96	16-WSTB29	4.0 J	10 U	10 U	10 U	10 U	10 U	10 U	10 U	10 U	10 U	10 U	10 U	10 U	10 U	10 U	10 U	10 U	10 U
5/30/96	16WSTB-30	4.0 J	10 U	10 U	10 U	10 U	10 U	10 U	10 U	10 U	10 U	10 U	10 U	10 U	10 U	10 U	10 U	10 U	10 U
6/3/96	WS0TB30	10 U	10 U	10 U	10 U	10 U	10 U	10 U	10 U	10 U	10 U	10 U	10 U	10 U	10 U	10 U	10 U	10 U	10 U
6/7/96	16WSTB31	2.0 JB	10 U	10 U	10 U	10 U	10 U	10 U	10 U	10 U	10 U	10 U	10 U	10 U	10 U	10 U	10 U	10 U	10 U
6/9/96	16WSTB-32	10 U	10 U	10 U	10 U	10 U	10 U	10 U	10 U	10 U	10 U	10 U	10 U	10 U	10 U	10 U	10 U	10 U	10 U
6/11/96	16WSTB33	3.0 J	10 U	10 U	10 U	10 U	10 U	10 U	10 U	10 U	10 U	10 U	10 U	10 U	10 U	10 U	10 U	10 U	10 U
6/17/96	16WSTB34	3.0 JB	10 U	10 U	10 U	10 U	10 U	10 U	10 U	10 U	10 U	10 U	10 U	10 U	10 U	10 U	10 U	10 U	10 U
7/9/96	16WSTB37	10 U	10 U	10 U	10 U	10 U	10 U	10 U	10 U	10 U	10 U	10 U	10 U	10 U	10 U	10 U	10 U	10 U	10 U
7/22/96	1616TB38	6.0 J	60 U	90 U	95 U	10 U	10 U	10 U	10 U	10 U	10 U	10 U	10 U	10 U	10 U	10 U	10 U	10 U	10 U
7/25/96	16WSTB39	10 U	60 U	90 U	95 U	10 U	10 U	10 U	10 U	10 U	10 U	10 U	10 U	10 U	10 U	10 U	10 U	10 U	10 U
7/31/96	16WSTB40	10 U	60 U	90 U	95 U	10 U	10 U	10 U	10 U	10 U	10 U	10 U	10 U	10 U	10 U	10 U	10 U	10 U	10 U
9/9/96	16WS-TB42	10 U	10 U	10 U	10 U	10 U	10 U	10 U	10 U	10 U	10 U	10 U	10 U	10 U	10 U	10 U	10 U	10 U	10 U
9/16/96	16WS-TB43	10 U	60 U	90 U	95 U	10 U	10 U	10 U	10 U	10 U	10 U	10 U	10 U	10 U	10 U	10 U	10 U	10 U	10 U
10/22/96	16WS-TB46	10 U	60 U	90 U	95 U	10 U	10 U	10 U	10 U	10 U	10 U	10 U	10 U	10 U	10 U	10 U	10 U	10 U	10 U
11/7/96	16WS-TB	10 U	60 U	90 U	95 U	10 U	10 U	10 U	10 U	10 U	10 U	10 U	10 U	10 U	10 U	10 U	10 U	10 U	10 U
11/8/96	16WS-TB47	10 U	60 U	90 U	95 U	10 U	10 U	10 U	10 U	10 U	10 U	10 U	10 U	10 U	10 U	10 U	10 U	10 U	10 U
11/12/96	16WS-TB48	10 U	60 U	90 U	95 U	10 U	10 U	10 U	10 U	10 U	10 U	10 U	10 U	10 U	10 U	10 U	10 U	10 U	10 U
11/25/96	16WS-TB49	29	60 U	90 U	95 U	10 U	10 U	10 U	10 U	10 U	10 U	10 U	10 U	10 U	10 U	10 U	10 U	10 U	10 U
12/12/96	16WS-TB52	110	10 U	10 U	10 U	10 U	10 U	10 U	10 U	10 U	10 U	10 U	10 U	10 U	10 U	10 U	10 U	10 U	10 U
12/17/96	16WS-TB53	180	10 U	10 U	10 U	10 U	10 U	10 U	10 U	10 U	10 U	10 U	10 U	10 U	10 U	10 U	10 U	10 U	10 U
12/27/96	16WS-TB55	10 U	60 U	90 U	95 U	10 U	10 U	10 U	10 U	10 U	10 U	10 U	10 U	10 U	10 U	10 U	10 U	10 U	10 U
1/13/97	16WS-TB56	10 U	60 U	90 U	95 U	10 U	10 U	10 U	10 U	10 U	10 U	10 U	10 U	10 U	10 U	10 U	10 U	10 U	10 U
1/17/97	16-WSTB57	10 U	60 U	90 U	95 U	10 U	10 U	10 U	10 U	10 U	10 U	10 U	10 U	10 U	10 U	10 U	10 U	10 U	10 U
1/21/97	16WS-TB58	10 U	60 U	90 U	95 U	10 U	10 U	10 U	10 U	10 U	10 U	10 U	10 U	10 U	10 U	10 U	10 U	10 U	10 U
1/22/97	16WS-TB59	10 U	60 U	90 U	95 U	10 U	10 U	10 U	10 U	10 U	10 U	10 U	10 U	10 U	10 U	10 U	10 U	10 U	10 U
1/22/97	16WS-TB60	10 U	60 U	90 U	95 U	10 U	10 U	10 U	10 U	10 U	10 U	10 U	10 U	10 U	10 U	10 U	10 U	10 U	10 U
1/27/97	16WS-TB61	10 U	60 U	90 U	95 U	10 U	10 U	10 U	10 U	10 U	10 U	10 U	10 U	10 U	10 U	10 U	10 U	10 U	10 U
2/4/97	16WS-TB62	10 U	60 U	90 U	95 U	10 U	10 U	10 U	10 U	10 U	10 U	10 U	10 U	10 U	10 U	10 U	10 U	10 U	10 U
2/19/97	0211-TB64	10 U	60 U	90 U	95 U	10 U	10 U	10 U	10 U	10 U	10 U	10 U	10 U	10 U	10 U	10 U	10 U	10 U	10 U
2/19/97	16WS-TB63	10 U	60 U	90 U	95 U	10 U	10 U	10 U	10 U	10 U	10 U	10 U	10 U	10 U	10 U	10 U	10 U	10 U	10 U
2/21/97	16WS-TB65	10 U	60 U	90 U	95 U	10 U	10 U	10 U	10 U	10 U	10 U	10 U	10 U	10 U	10 U	10 U	10 U	10 U	10 U
3/7/97	16WS-TB68	10 U	60 U	90 U	95 U	10 U	10 U	10 U	10 U	10 U	10 U	10 U	10 U	10 U	10 U	10 U	10 U	10 U	10 U
3/15/97	16WSTB69	10 UB	60 UB	90 U	95 U	10 U	10 U	10 U	10 U	10 UB	10 U	10 U	10 U	10 U	10 U	10 U	10 U	10 UB	10 UB
3/18/97	16WSTB70	10 U	60 U	90 U	95 U	10 U	10 U	10 U	10 U	10 U	10 U	10 U	10 U	10 U	10 U	10 U	10 U	10 U	10 U
3/26/97	16WS-TB71	10 U	60 U	90 U	95 U	10 U	10 U	10 U	10 U	10 U	10 U	10 U	10 U	10 U	10 U	10 U	10 U	10 U	10 U
4/3/97	16WS-TB72	10 U	60 U	90 U	95 U	10 U	10 U	10 U	10 U	10 U	10 U	10 U	10 U	10 U	10 U	10 U	10 U	10 U	10 U
4/3/97	16WS-TB73	4.0 J	60 U	90 U	95 U	10 U	10 U	10 U	10 U	10 U	10 U	10 U	10 U	10 U	10 U	10 U	10 U	10 U	10 U
4/3/97	16WS-TB74	10 U	60 U	90 U	95 U	10 U	10 U	10 U	10 U	10 U	10 U	10 U	10 U	10 U	10 U	10 U	10 U	10 U	10 U
4/4/97	16WS-TB75	10 U	60 U	90 U	95 U	10 U	10 U	10 U	10 U	10 U	10 U	10 U	10 U	10 U	10 U	10 U	10 U	10 U	10 U

TABLE 3
TRIP BLANK ANALYTICAL RESULTS SUMMARY

Sample Date	Field ID	ETHYL METHACRYLATE	ETHYLBENZENE	IODOMETHANE	ISOBUTANOL	2-METHYL-2-PROPENENITRILE	METHYL METHACRYLATE	METHYLENE CHLORIDE	PROPIONITRILE	STYRENE	TETRACHLOROETHENE	TOLUENE	TRANS-1,3-DICHLOROPROPENE	TRANS-1,4-DICHLORO-2-BUTENE	TRICHLOROETHENE	TRICHLOROFLUOROMETHANE	VINYL ACETATE	VINYL CHLORIDE
2/7/96	16-16TB10	10 U	10 U	5.0 U	2800 U	20 U	20 U	1.0 JB	220 U	10 U	10 U	10 U	10 U	10 U	2.0 J	10 U	10 U	10 U
2/8/96	16-16TB09	10 U	10 U	5.0 U	2800 U	20 U	20 U	3.0 JB	220 U	10 U	10 U	10 U	10 U	10 U	10 U	10 U	10 U	10 U
2/8/96	16-16TB11	10 U	10 U	5.0 U	2800 U	20 U	20 U	1.0 JB	220 U	10 U	10 U	10 U	10 U	10 U	10 U	10 U	10 U	10 U
2/8/96	16-16TB12	10 U	10 U	5.0 U	2800 U	20 U	20 U	1.0 JB	220 U	10 U	10 U	10 U	10 U	10 U	10 U	10 U	10 U	10 U
3/28/96	16-16TB25	NA	10 U	NA	NA	NA	NA	10 U	NA	10 U	10 U	10 U	10 U	NA	10 U	NA	NA	10 U
4/15/96	2608DTB26	NA	10 U	NA	NA	NA	NA	2.0 JB	NA	10 U	10 U	10 U	10 U	NA	10 U	NA	NA	10 U
5/28/96	16-WSTB29	NA	10 U	10 U	10 U	10 U	10 U	2.0 JB	10 U	10 U	10 U	10 U	10 U	10 U	10 U	10 U	10 U	10 U
5/30/96	16WSTB-30	NA	10 U	10 U	10 U	10 U	10 U	1.0 J	10 U	10 U	10 U	10 U	10 U	10 U	10 U	10 U	10 U	10 U
6/3/96	WS0TB30	NA	10 U	10 U	10 U	10 U	10 U	2.0 J	10 U	10 U	10 U	10 U	10 U	10 U	10 U	10 U	10 U	10 U
6/7/96	16WSTB31	NA	10 U	10 U	10 U	10 U	10 U	1.0 JB	10 U	10 U	10 U	10 U	10 U	10 U	10 U	10 U	10 U	10 U
6/9/96	16WSTB-32	NA	10 U	10 U	10 U	10 U	10 U	2.0 JB	10 U	10 U	10 U	10 U	10 U	10 U	10 U	10 U	10 U	10 U
6/11/96	16WSTB33	NA	10 U	10 U	10 U	10 U	10 U	10 U	10 U	10 U	10 U	10 U	10 U	10 U	10 U	10 U	10 U	10 U
6/17/96	16WSTB34	NA	10 U	10 U	10 U	10 U	10 U	1.0 J	10 U	10 U	10 U	10 U	10 U	10 U	10 U	10 U	10 U	10 U
7/9/96	16WSTB37	NA	10 U	10 U	10 U	10 U	10 U	2.0 JB	10 U	10 U	10 U	10 U	10 U	10 U	10 U	10 U	10 U	10 U
7/22/96	1616TB38	NA	10 U	5.0 U	2800 U	20 U	20 U	4.0 JB	220 U	10 U	10 U	10 U	10 U	10 U	10 U	10 U	10 U	10 U
7/25/96	16WSTB39	NA	10 U	5.0 U	2800 U	20 U	20 U	3.0 JB	220 U	10 U	10 U	10 U	10 U	10 U	10 U	10 U	10 U	10 U
7/31/96	16WSTB40	NA	10 U	5.0 U	2800 U	20 U	20 U	2.0 J	220 U	10 U	10 U	10 U	10 U	10 U	10 U	10 U	10 U	10 U
9/9/96	16WS-TB42	NA	10 U	10 U	10 U	10 U	10 U	1.0 J	10 U	10 U	10 U	10 U	10 U	10 U	10 U	10 U	10 U	10 U
9/16/96	16WS-TB43	NA	10 U	5.0 U	2800 U	20 U	20 U	3.0 JB	220 U	10 U	10 U	10 U	10 U	10 U	10 U	10 U	10 U	10 U
10/22/96	16WS-TB46	10 U	10 U	5.0 U	2800 U	20 U	20 U	10 U	220 U	10 U	10 U	10 U	10 U	10 U	10 U	10 U	10 U	10 U
11/7/96	16WS-TB	10 U	10 U	5.0 U	2800 U	20 U	20 U	10 U	220 U	10 U	10 U	10 U	10 U	10 U	10 U	10 U	10 U	10 U
11/8/96	16WS-TB47	10 U	10 U	5.0 U	2800 U	20 U	20 U	10 U	220 U	10 U	10 U	10 U	10 U	10 U	10 U	10 U	10 U	10 U
11/12/96	16WS-TB48	10 U	10 U	5.0 U	2800 U	20 U	20 U	10 U	220 U	10 U	10 U	10 U	10 U	10 U	10 U	10 U	10 U	10 U
11/25/96	16WS-TB49	10 U	10 U	5.0 U	2800 U	20 U	20 U	10 U	220 U	10 U	10 U	10 U	10 U	10 U	10 U	10 U	10 U	10 U
12/12/96	16WS-TB52	10 U	10 U	10 U	10 U	10 U	10 U	10 U	10 U	10 U	10 U	10 U	10 U	10 U	10 U	10 U	10 U	10 U
12/17/96	16WS-TB53	10 U	10 U	10 U	10 U	10 U	10 U	10 U	10 U	10 U	10 U	10 U	10 U	10 U	10 U	10 U	10 U	10 U
12/27/96	16WS-TB55	10 U	10 U	5.0 U	2800 U	20 U	20 U	10 U	220 U	10 U	10 U	10 U	10 U	10 U	10 U	10 U	10 U	10 U
1/13/97	16WS-TB56	10 U	10 U	5.0 U	2800 U	20 U	20 U	10 U	220 U	10 U	10 U	10 U	10 U	10 U	10 U	10 U	10 U	10 U
1/17/97	16-WSTB57	10 U	10 U	5.0 U	2800 U	20 U	20 U	10 U	220 U	10 U	10 U	10 U	10 U	10 U	10 U	10 U	10 U	10 U
1/21/97	16WS-TB58	10 U	10 U	5.0 U	2800 U	20 U	20 U	10 U	220 U	10 U	10 U	10 U	10 U	10 U	10 U	10 U	10 U	10 U
1/22/97	16WS-TB59	10 U	10 U	5.0 U	2800 U	20 U	20 U	10 U	220 U	10 U	10 U	10 U	10 U	10 U	10 U	10 U	10 U	10 U
1/22/97	16WS-TB60	10 U	10 U	5.0 U	2800 U	20 U	20 U	10 U	220 U	10 U	10 U	10 U	10 U	10 U	10 U	10 U	10 U	10 U
1/27/97	16WS-TB61	10 U	10 U	5.0 U	2800 U	20 U	20 U	10 U	220 U	10 U	10 U	10 U	10 U	10 U	10 U	10 U	10 U	10 U
2/4/97	16WS-TB62	10 U	10 U	5.0 U	2800 U	20 U	20 U	10 U	220 U	10 U	10 U	10 U	10 U	10 U	10 U	10 U	10 U	10 U
2/19/97	0211-TB64	10 U	10 U	5.0 U	2800 U	20 U	20 U	10 U	220 U	10 U	10 U	10 U	10 U	10 U	10 U	10 U	10 U	10 U
2/19/97	16WS-TB63	10 U	10 U	5.0 U	2800 U	20 U	20 U	10 U	220 U	10 U	10 U	10 U	10 U	10 U	10 U	10 U	10 U	10 U
2/21/97	16WS-TB65	10 U	10 U	5.0 U	2800 U	20 U	20 U	10 U	220 U	10 U	10 U	10 U	10 U	10 U	10 U	10 U	10 U	10 U
3/7/97	16WS-TB68	10 U	10 U	5.0 U	2800 U	20 U	20 U	10 U	220 U	10 U	10 U	10 U	10 U	10 U	10 U	10 U	10 U	10 U
3/15/97	16WSTB69	10 UB	10 U	5.0 UB	2800 UB	20 UB	20 UB	10 U	220 UB	10 U	10 U	10 U	10 U	10 UB	10 U	10 UB	10 UB	10 U
3/18/97	16WSTB70	10 U	10 U	5.0 U	2800 U	20 U	20 U	10 U	220 U	10 U	10 U	10 U	10 U	10 U	10 U	10 U	10 U	10 U
3/26/97	16WS-TB71	10 U	10 U	5.0 U	2800 U	20 U	20 U	10 U	220 U	10 U	10 U	10 U	10 U	10 U	10 U	10 U	10 U	10 U
4/3/97	16WS-TB72	10 U	10 U	5.0 U	2800 U	20 U	20 U	10 U	220 U	10 U	10 U	10 U	10 U	10 U	10 U	10 U	10 U	10 U
4/3/97	16WS-TB73	10 U	10 U	5.0 U	2800 U	20 U	20 U	10 U	220 U	10 U	10 U	10 U	10 U	10 U	10 U	10 U	10 U	10 U
4/3/97	16WS-TB74	10 U	10 U	5.0 U	2800 U	20 U	20 U	10 U	220 U	10 U	10 U	10 U	10 U	10 U	10 U	10 U	10 U	10 U
4/4/97	16WS-TB75	10 U	10 U	5.0 U	2800 U	20 U	20 U	10 U	220 U	10 U	10 U	10 U	10 U	10 U	10 U	10 U	10 U	10 U

TABLE 3
TRIP BLANK ANALYTICAL RESULTS SUMMARY

Sample Date	Field ID	1,2-DICHLOROETHYLENE(cis&trans)	XYLENE	1,1,1,2-TETRACHLOROETHANE	1,1,1-TRICHLOROETHANE	1,1,2,2-TETRACHLOROETHANE	1,1,2-TRICHLOROETHANE	1,1-DICHLOROETHANE	1,1-DICHLOROETHENE	1,2,3-TRICHLOROPROPANE	1,2-DIBROMO-3-CHLOROPROPANE	1,2-DIBROMOETHANE	1,2-DICHLOROETHANE	1,2-DICHLOROPROPANE	1,4-DIOXANE	2-BUTANONE	2-HEXANONE	ALLYL CHLORIDE	4-METHYL-2-PENTANONE
4/4/97	16WS-TB76	10 U	10 U	10 U	10 U	10 U	10 U	10 U	10 U	10 U	10 U	10 U	10 U	10 U	3700 U	10 U	10 U	15 U	10 U
4/18/97	16WS-TB77	10 U	10 U	10 U	10 U	10 U	10 U	10 U	10 U	10 U	10 U	10 U	10 U	10 U	3700 U	10 U	10 U	15 U	10 U
4/18/97	16WS-TB78	10 U	10 U	10 U	10 U	10 U	10 U	10 U	10 U	10 U	10 U	10 U	10 U	10 U	3700 U	10 U	10 U	15 U	10 U
4/18/97	16WS-TB79	10 U	10 U	10 U	10 U	10 U	10 U	10 U	10 U	10 U	10 U	10 U	10 U	10 U	3700 U	10 U	10 U	15 U	10 U
4/21/97	16-TB80	10 U	10 U	10 U	10 U	10 U	10 U	10 U	10 U	10 U	10 U	10 U	10 U	10 U	3700 U	10 U	10 U	15 U	10 U
4/27/97	16-TB81	10 U	10 U	10 U	10 U	10 U	10 U	10 U	10 U	10 U	10 U	10 U	10 U	10 U	3700 U	10 U	10 U	15 U	10 U
5/2/97	16-TB-83	10 U	10 U	10 U	10 U	10 U	10 U	10 U	10 U	10 U	10 U	10 U	10 U	10 U	3700 U	10 U	10 U	15 U	10 U
5/3/97	16-TB-84	10 U	10 U	10 U	10 U	10 U	10 U	10 U	10 U	10 U	10 U	10 U	10 U	10 U	3700 U	10 U	10 U	15 U	10 U
5/5/97	16TB85	10 U	10 U	10 U	10 U	10 U	10 U	10 U	10 U	10 U	10 U	10 U	10 U	10 U	3700 U	10 U	10 U	15 U	10 U
5/6/97	16-TB82	10 U	10 U	10 U	10 U	10 U	10 U	10 U	10 U	10 U	10 U	10 U	10 U	10 U	3700 U	10 U	10 U	15 U	10 U
5/8/97	16-TB86	10 U	10 U	10 U	10 U	10 U	10 U	10 U	10 U	10 U	10 U	10 U	10 U	10 U	3700 U	10 U	10 U	15 U	10 U
5/12/97	16TB87	10 U	10 U	10 U	10 U	10 U	10 U	10 U	10 U	10 U	10 U	10 U	10 U	10 U	3700 U	10 U	10 U	15 U	10 U
5/17/97	TB-88	10 U	10 U	10 U	10 U	10 U	10 U	10 U	10 U	10 U	10 U	10 U	10 U	10 U	3700 U	10 U	10 U	15 U	10 U
5/25/97	16TB92	10 U	10 U	10 U	10 U	10 U	10 U	10 U	10 U	10 U	10 U	10 U	10 U	10 U	3700 U	10 U	10 U	15 U	10 U
5/28/97	16TB93	10 U	10 U	10 U	10 U	10 U	10 U	10 U	10 U	10 U	10 U	10 U	10 U	10 U	3700 U	10 U	10 U	15 U	10 U
5/30/97	16TB94	10 U	10 U	10 U	10 U	10 U	10 U	10 U	10 U	10 U	10 U	10 U	10 U	10 U	3700 U	10 U	10 U	15 U	10 U
5/31/97	16TB95	10 U	10 U	10 U	10 U	10 U	10 U	10 U	10 U	10 U	10 U	10 U	10 U	10 U	3700 U	10 U	10 U	15 U	10 U
6/1/97	16TB96	10 U	10 U	10 U	10 U	10 U	10 U	10 U	10 U	10 U	10 U	10 U	10 U	10 U	3700 U	10 U	10 U	15 U	10 U
6/6/97	16TB97	10 U	10 U	10 U	10 U	10 U	10 U	10 U	10 U	10 U	10 U	10 U	10 U	10 U	3700 U	10 U	10 U	15 U	10 U
6/7/97	16TB98	10 U	10 U	10 U	10 U	10 U	10 U	10 U	10 U	10 U	10 U	10 U	10 U	10 U	3700 U	10 U	10 U	15 U	10 U
6/9/97	16TB99	10 U	10 U	10 U	10 U	10 U	10 U	10 U	10 U	10 U	10 U	10 U	10 U	10 U	3700 U	10 U	10 U	15 U	10 U
6/13/97	16WSTB100	10 U	10 U	10 U	10 U	10 U	10 U	10 U	10 U	10 U	10 U	10 U	10 U	10 U	3700 U	10 U	10 U	15 U	10 U
6/17/97	16WSTB101	10 U	10 U	10 U	10 U	10 U	10 U	10 U	10 U	10 U	10 U	10 U	10 U	10 U	3700 U	10 U	10 U	15 U	10 U
6/18/97	16TB102	10 U	10 U	10 U	10 U	10 U	10 U	10 U	10 U	10 U	10 U	10 U	10 U	10 U	3700 U	10 U	10 U	15 U	10 U
6/21/97	16TB103	10 U	10 U	10 U	10 U	10 U	10 U	10 U	10 U	10 U	10 U	10 U	10 U	10 U	3700 U	10 U	10 U	15 U	10 U
6/22/97	16TB104	10 U	10 U	10 U	10 U	10 U	10 U	10 U	10 U	10 U	10 U	10 U	10 U	10 U	3700 U	10 U	10 U	15 U	10 U
6/26/97	16TB-105	10 U	10 U	10 U	10 U	10 U	10 U	10 U	10 U	10 U	10 U	10 U	10 U	10 U	3700 U	10 U	10 U	15 U	10 U
6/30/97	16TB105	10 U	10 U	10 U	10 U	10 U	10 U	10 U	10 U	10 U	10 U	10 U	10 U	10 U	3700 U	10 U	10 U	15 U	10 U
7/14/97	16TB106	10 U	10 U	10 U	10 U	10 U	10 U	10 U	10 U	10 U	10 U	10 U	10 U	10 U	3700 U	10 U	10 U	15 U	10 U
8/8/97	16WS-TB108	10 U	10 U	10 U	10 U	10 U	10 U	10 U	10 U	10 U	10 U	10 U	10 U	10 U	3700 U	10 U	10 U	15 U	10 U
8/10/97	16TB110	10 U	10 U	10 U	10 U	10 U	10 U	10 U	10 U	10 U	10 U	10 U	10 U	10 U	3700 U	10 U	10 U	15 U	10 U
8/12/97	16TB111	10 U	10 U	10 U	10 U	10 U	10 U	10 U	10 U	10 U	10 U	10 U	10 U	10 U	3700 U	10 U	10 U	15 U	10 U
8/13/97	16TB112	10 U	10 U	10 U	10 U	10 U	10 U	10 U	10 U	10 U	10 U	10 U	10 U	10 U	3700 U	10 U	10 U	15 U	10 U
8/15/97	16TB113	10 U	10 U	10 U	10 U	10 U	10 U	10 U	10 U	10 U	10 U	10 U	10 U	10 U	3700 U	10 U	10 U	15 U	10 U
8/17/97	16TB114	10 U	10 U	10 U	10 U	10 U	10 U	10 U	10 U	10 U	10 U	10 U	10 U	10 U	3700 U	10 U	10 U	15 U	10 U
9/9/97	16TB117	10 U	10 U	10 U	10 U	10 U	10 U	10 U	10 U	10 U	10 U	10 U	10 U	10 U	3700 U	10 U	10 U	15 U	10 U

Unit of Measure = ug/L
NA = Not Analyzed
Data Qualifiers
B= Analyte detected in blank
D= Value reported from diluted analysis
J= Estimated value below quantitation limit
U= Not detected

TABLE 3
TRIP BLANK ANALYTICAL RESULTS SUMMARY

Sample Date	Field ID	ACETONE	ACETONITRILE	ACROLEIN	ACRYLONITRILE	BENZENE	BROMODICHLOROMETHANE	BROMOFORM	BROMOMETHANE	CARBON DISULFIDE	CARBON TETRACHLORIDE	CHLOROBENZENE	CHLOROETHANE	CHLOROFORM	CHLOROMETHANE	CIS-1,3-DICHLOROPROPENE	DIBROMOCHLOROMETHANE	DIBROMOMETHANE	DICHLORODIFLUOROMETHANE
4/4/97	16WS-TB76	10 U	60 U	90 U	95 U	10 U	10 U	10 U	10 U	10 U	10 U	10 U	10 U	10 U	10 U	10 U	10 U	10 U	10 U
4/18/97	16WS-TB77	10 U	60 U	90 U	95 U	10 U	10 U	10 U	10 U	10 U	10 U	10 U	10 U	10 U	10 U	10 U	10 U	10 U	10 U
4/18/97	16WS-TB78	10 U	60 U	90 U	95 U	10 U	10 U	10 U	10 U	10 U	10 U	10 U	10 U	10 U	10 U	10 U	10 U	10 U	10 U
4/18/97	16WS-TB79	10 U	60 U	90 U	95 U	10 U	10 U	10 U	10 U	10 U	10 U	10 U	10 U	10 U	10 U	10 U	10 U	10 U	10 U
4/21/97	16-TB80	10 U	60 U	90 U	95 U	10 U	10 U	10 U	10 U	10 U	10 U	10 U	10 U	10 U	10 U	10 U	10 U	10 U	10 U
4/27/97	16-TB81	10 U	60 U	90 U	95 U	10 U	10 U	10 U	10 U	10 U	10 U	10 U	10 U	10 U	10 U	10 U	10 U	10 U	10 U
5/2/97	16-TB-83	10 U	60 U	90 U	95 U	10 U	10 U	10 U	10 U	10 U	10 U	10 U	10 U	10 U	10 U	10 U	10 U	10 U	10 U
5/3/97	16-TB-84	10 U	60 U	90 U	95 U	10 U	10 U	10 U	10 U	10 U	10 U	10 U	10 U	10 U	10 U	10 U	10 U	10 U	10 U
5/5/97	16TB85	10 U	60 U	90 U	95 U	10 U	10 U	10 U	10 U	10 U	10 U	10 U	10 U	10 U	10 U	10 U	10 U	10 U	10 U
5/6/97	16-TB82	10 U	60 U	90 U	95 U	10 U	10 U	10 U	10 U	10 U	10 U	10 U	10 U	10 U	10 U	10 U	10 U	10 U	10 U
5/8/97	16-TB86	10 U	60 U	90 U	95 U	10 U	10 U	10 U	10 U	10 U	10 U	10 U	10 U	10 U	10 U	10 U	10 U	10 U	10 U
5/12/97	16TB87	10 U	60 U	90 U	95 U	10 U	10 U	10 U	10 U	10 U	10 U	10 U	10 U	10 U	10 U	10 U	10 U	10 U	10 U
5/17/97	TB-88	10 U	60 U	90 U	95 U	10 U	10 U	10 U	10 U	10 U	10 U	10 U	10 U	10 U	10 U	10 U	10 U	10 U	10 U
5/25/97	16TB92	48	14 J	90 U	95 U	10 U	10 U	10 U	10 U	10 U	10 U	10 U	10 U	10 U	10 U	10 U	10 U	10 U	10 U
5/28/97	16TB93	10 U	60 U	90 U	95 U	10 U	10 U	10 U	10 U	10 U	10 U	10 U	10 U	10 U	10 U	10 U	10 U	10 U	10 U
5/30/97	16TB94	65	29 J	90 U	95 U	10 U	10 U	10 U	10 U	10 U	10 U	10 U	10 U	10 U	10 U	10 U	10 U	10 U	10 U
5/31/97	16TB95	74	23 J	90 U	95 U	10 U	10 U	10 U	10 U	10 U	10 U	10 U	10 U	10 U	10 U	10 U	10 U	10 U	10 U
6/1/97	16TB96	69	29 J	90 U	95 U	10 U	10 U	10 U	10 U	10 U	10 U	10 U	10 U	10 U	10 U	10 U	10 U	10 U	10 U
6/6/97	16TB97	26 B	14 J	90 U	95 U	10 U	10 U	10 U	10 U	10 U	10 U	10 U	10 U	10 U	10 U	10 U	10 U	10 U	10 U
6/7/97	16TB98	34 B	18 J	90 U	95 U	10 U	10 U	10 U	10 U	10 U	10 U	10 U	10 U	10 U	10 U	10 U	10 U	10 U	10 U
6/9/97	16TB99	31 B	16 J	90 U	95 U	10 U	10 U	10 U	10 U	10 U	10 U	10 U	10 U	10 U	10 U	10 U	10 U	10 U	10 U
6/13/97	16WSTB100	10 U	10 J	90 U	95 U	10 U	10 U	10 U	10 U	10 U	10 U	10 U	10 U	10 U	10 U	10 U	10 U	10 U	10 U
6/17/97	16WSTB101	28	18 JB	90 U	95 U	10 U	10 U	10 U	10 U	10 U	10 U	10 U	10 U	10 U	10 U	10 U	10 U	10 U	10 U
6/18/97	16TB102	10 U	60 U	90 U	95 U	10 U	10 U	10 U	10 U	10 U	10 U	10 U	10 U	10 U	10 U	10 U	10 U	10 U	10 U
6/21/97	16TB103	10 U	60 U	90 U	95 U	10 U	10 U	10 U	10 U	10 U	10 U	10 U	10 U	10 U	10 U	10 U	10 U	10 U	10 U
6/22/97	16TB104	10 U	60 U	90 U	95 U	10 U	10 U	10 U	10 U	10 U	10 U	10 U	10 U	10 U	10 U	10 U	10 U	10 U	10 U
6/26/97	16TB-105	10 U	60 U	90 U	95 U	10 U	10 U	10 U	10 U	10 U	10 U	10 U	10 U	10 U	10 U	10 U	10 U	10 U	10 U
6/30/97	16TB105	10 U	60 U	90 U	95 U	10 U	10 U	10 U	10 U	10 U	10 U	10 U	10 U	10 U	10 U	10 U	10 U	10 U	10 U
7/14/97	16TB106	42	18 J	90 U	95 U	10 U	10 U	10 U	10 U	10 U	10 U	10 U	10 U	10 U	10 U	10 U	10 U	10 U	10 U
8/8/97	16WS-TB108	10 U	60 U	90 U	95 U	10 U	10 U	10 U	10 U	10 U	10 U	10 U	10 U	10 U	10 U	10 U	10 U	10 U	10 U
8/10/97	16TB110	10 U	60 U	90 U	95 U	10 U	10 U	10 U	10 U	10 U	10 U	10 U	10 U	10 U	10 U	10 U	10 U	10 U	10 U
8/12/97	16TB111	10 U	60 U	90 U	95 U	10 U	10 U	10 U	10 U	10 U	10 U	10 U	10 U	10 U	10 U	10 U	10 U	10 U	10 U
8/13/97	16TB112	10 U	60 U	90 U	95 U	10 U	10 U	10 U	10 U	10 U	10 U	10 U	10 U	10 U	10 U	10 U	10 U	10 U	10 U
8/15/97	16TB113	10 U	60 U	90 U	95 U	10 U	10 U	10 U	10 U	10 U	10 U	10 U	10 U	10 U	10 U	10 U	10 U	10 U	10 U
8/17/97	16TB114	10 U	60 U	90 U	95 U	10 U	10 U	10 U	10 U	10 U	10 U	10 U	10 U	10 U	10 U	10 U	10 U	10 U	10 U
9/9/97	16TB117	10 U	60 U	90 U	95 U	10 U	10 U	10 U	10 U	10 U	10 U	10 U	10 U	10 U	10 U	10 U	10 U	10 U	10 U

Unit of Measure = ug/L
NA = Not Analyzed
Data Qualifiers
B= Analyte detected in blank
D= Value reported from diluted analysis
J= Estimated value below quantitation limit
U= Not detected

TABLE 3
TRIP BLANK ANALYTICAL RESULTS SUMMARY

Sample Date	Field ID	ETHYL METHACRYLATE	ETHYLBENZENE	IODOMETHANE	ISOBUTANOL	2-METHYL-2-PROPENENITRILE	METHYL METHACRYLATE	METHYLENE CHLORIDE	PROPIONITRILE	STYRENE	TETRACHLOROETHENE	TOLUENE	TRANS-1,3-DICHLOROPROPENE	TRANS-1,4-DICHLORO-2-BUTENE	TRICHLOROETHENE	TRICHLOROFLUOROMETHANE	VINYL ACETATE	VINYL CHLORIDE
4/4/97	16WS-TB76	10 U	10 U	5.0 U	2800 U	20 U	20 U	10 U	220 U	10 U	10 U	10 U	10 U	10 U	10 U	10 U	10 U	10 U
4/18/97	16WS-TB77	10 U	10 U	5.0 U	2800 U	20 U	20 U	10 U	220 U	10 U	10 U	10 U	10 U	10 U	10 U	10 U	10 U	10 U
4/18/97	16WS-TB78	10 U	10 U	5.0 U	2800 U	20 U	20 U	10 U	220 U	10 U	10 U	10 U	10 U	10 U	10 U	10 U	10 U	10 U
4/18/97	16WS-TB79	10 U	10 U	5.0 U	2800 U	20 U	20 U	10 U	220 U	10 U	10 U	10 U	10 U	10 U	10 U	10 U	10 U	10 U
4/21/97	16-TB80	10 U	10 U	5.0 U	2800 U	20 U	20 U	10 U	220 U	10 U	10 U	10 U	10 U	10 U	10 U	10 U	10 U	10 U
4/27/97	16-TB81	10 U	10 U	5.0 U	2800 U	20 U	20 U	10 U	220 U	10 U	10 U	10 U	10 U	10 U	10 U	10 U	10 U	10 U
5/2/97	16-TB-83	10 U	10 U	5.0 U	2800 U	20 U	20 U	10 U	220 U	10 U	10 U	10 U	10 U	10 U	10 U	10 U	10 U	10 U
5/3/97	16-TB-84	10 U	10 U	5.0 U	2800 U	20 U	20 U	10 U	220 U	10 U	10 U	10 U	10 U	10 U	10 U	10 U	10 U	10 U
5/5/97	16TB85	10 U	10 U	5.0 U	2800 U	20 U	20 U	10 U	220 U	10 U	10 U	10 U	10 U	10 U	10 U	10 U	10 U	10 U
5/6/97	16-TB82	10 U	10 U	5.0 U	2800 U	20 U	20 U	10 U	220 U	10 U	10 U	10 U	10 U	10 U	10 U	10 U	10 U	10 U
5/8/97	16-TB86	10 U	10 U	5.0 U	2800 U	20 U	20 U	10 U	220 U	10 U	10 U	10 U	10 U	10 U	10 U	10 U	10 U	10 U
5/12/97	16TB87	10 U	10 U	5.0 U	2800 U	20 U	20 U	10 U	220 U	10 U	10 U	10 U	10 U	10 U	10 U	10 U	10 U	10 U
5/17/97	TB-88	10 U	10 U	5.0 U	2800 U	20 U	20 U	10 U	220 U	10 U	10 U	10 U	10 U	10 U	10 U	10 U	10 U	10 U
5/25/97	16TB92	10 U	10 U	5.0 U	2800 U	20 U	20 U	3.0 J	220 U	10 U	10 U	10 U	10 U	10 U	10 U	10 U	10 U	10 U
5/28/97	16TB93	10 U	10 U	5.0 U	2800 U	20 U	20 U	10 U	220 U	10 U	10 U	10 U	10 U	10 U	10 U	10 U	10 U	10 U
5/30/97	16TB94	10 U	10 U	5.0 U	2800 U	20 U	20 U	2.0 J	220 U	10 U	10 U	10 U	10 U	10 U	10 U	10 U	10 U	10 U
5/31/97	16TB95	10 U	10 U	5.0 U	2800 U	20 U	20 U	2.0 J	220 U	10 U	10 U	10 U	10 U	10 U	10 U	10 U	10 U	10 U
6/1/97	16TB96	10 U	10 U	5.0 U	2800 U	20 U	20 U	2.0 J	220 U	10 U	10 U	10 U	10 U	10 U	10 U	10 U	10 U	10 U
6/6/97	16TB97	10 U	10 U	5.0 U	2800 U	20 U	20 U	3.0 JB	220 U	10 U	10 U	10 U	10 U	10 U	10 U	10 U	10 U	10 U
6/7/97	16TB98	10 U	10 U	5.0 U	2800 U	20 U	20 U	3.0 JB	220 U	10 U	10 U	10 U	10 U	10 U	10 U	10 U	10 U	10 U
6/9/97	16TB99	10 U	10 U	5.0 U	2800 U	20 U	20 U	3.0 JB	220 U	10 U	10 U	10 U	10 U	10 U	10 U	10 U	10 U	10 U
6/13/97	16WSTB100	10 U	10 U	5.0 U	2800 U	20 U	20 U	6.0 JB	220 U	10 U	10 U	10 U	10 U	10 U	10 U	10 U	10 U	10 U
6/17/97	16WSTB101	10 U	10 U	5.0 U	2800 U	20 U	20 U	7.0 JB	220 U	10 U	10 U	10 U	10 U	10 U	10 U	10 U	10 U	10 U
6/18/97	16TB102	10 U	10 U	5.0 U	2800 U	20 U	20 U	2.0 J	220 U	10 U	10 U	10 U	10 U	10 U	10 U	10 U	10 U	10 U
6/21/97	16TB103	10 U	10 U	5.0 U	2800 U	20 U	20 U	7.0 JB	220 U	10 U	10 U	10 U	10 U	10 U	10 U	10 U	10 U	10 U
6/22/97	16TB104	10 U	10 U	5.0 U	2800 U	20 U	20 U	5.0 JB	220 U	10 U	10 U	10 U	10 U	10 U	10 U	10 U	10 U	10 U
6/26/97	16TB-105	10 U	10 U	5.0 U	2800 U	20 U	20 U	1.0 JB	220 U	10 U	10 U	10 U	10 U	10 U	10 U	10 U	10 U	10 U
6/30/97	16TB105	10 U	10 U	5.0 U	2800 U	20 U	20 U	10 U	220 U	10 U	10 U	10 U	10 U	10 U	10 U	10 U	10 U	10 U
7/14/97	16TB106	10 U	10 U	5.0 U	2800 U	20 U	20 U	8.0 J	220 U	10 U	10 U	10 U	10 U	10 U	10 U	10 U	10 U	10 U
8/8/97	16WS-TB108	10 U	10 U	5.0 U	2800 U	20 U	20 U	10 U	220 U	10 U	10 U	10 U	10 U	10 U	10 U	10 U	10 U	10 U
8/10/97	16TB110	10 U	10 U	5.0 U	2800 U	20 U	20 U	10 U	220 U	10 U	10 U	10 U	10 U	10 U	10 U	10 U	10 U	10 U
8/12/97	16TB111	10 U	10 U	5.0 U	2800 U	20 U	20 U	10 U	220 U	10 U	10 U	10 U	10 U	10 U	10 U	10 U	10 U	10 U
8/13/97	16TB112	10 U	10 U	5.0 U	2800 U	20 U	20 U	10 U	220 U	10 U	10 U	10 U	10 U	10 U	10 U	10 U	10 U	10 U
8/15/97	16TB113	10 U	10 U	5.0 U	2800 U	20 U	20 U	2.0 J	220 U	10 U	10 U	10 U	10 U	10 U	10 U	10 U	10 U	10 U
8/17/97	16TB114	10 U	10 U	5.0 U	2800 U	20 U	20 U	10 U	220 U	10 U	10 U	10 U	10 U	10 U	10 U	10 U	10 U	10 U
9/9/97	16TB117	10 U	10 U	5.0 U	2800 U	20 U	20 U	4.0 JB	220 U	10 U	10 U	10 U	10 U	10 U	10 U	10 U	10 U	10 U

Unit of Measure = ug/L
NA = Not Analyzed
Data Qualifiers
B= Analyte detected in blank
D= Value reported from diluted analysis
J= Estimated value below quantitation limit
U= Not detected

TABLE 4
GEOPROBE SAMPLES:
ANALYTICAL RESULTS SUMMARY

Site ID		1616B0104	1616B0105	1616B0204	1616B0302	1616B0402	1616B0502
Sample Depth		3' - 4'	4' - 5'	3' - 4'	1' - 2'	1' - 2'	1' - 2'
Sample Date		4/4/97	4/4/97	4/4/97	4/4/97	4/4/97	4/4/97
1,1,1,2-TETRACHLOROETHANE	UG/KG	13 U	12 U	12 U	11 U	12 U	11 U
1,1,1-TRICHLOROETHANE	UG/KG	13 U	12 U	12 U	11 U	12 U	11 U
1,1,2,2-TETRACHLOROETHANE	UG/KG	13 U	12 U	12 U	11 U	12 U	11 U
1,1,2-TRICHLOROETHANE	UG/KG	13 U	12 U	12 U	11 U	12 U	11 U
1,1-DICHLOROETHANE	UG/KG	13 U	12 U	12 U	11 U	12 U	11 U
1,1-DICHLOROETHENE	UG/KG	13 U	12 U	12 U	11 U	12 U	11 U
1,2,3-TRICHLOROPROPANE	UG/KG	13 U	12 U	12 U	11 U	12 U	11 U
1,2-DIBROMO-3-CHLOROPROPANE	UG/KG	13 U	12 U	12 U	11 U	12 U	11 U
1,2-DIBROMOETHANE	UG/KG	13 U	12 U	12 U	11 U	12 U	11 U
1,2-DICHLOROETHANE	UG/KG	13 U	12 U	12 U	11 U	12 U	11 U
1,2-DICHLOROETHYLENE (CIS AND TRANS ISOMERS)	UG/KG	13 U	12 U	12 U	11 U	12 U	11 U
1,2-DICHLOROPROPANE	UG/KG	13 U	12 U	12 U	11 U	12 U	11 U
1,4-DIOXANE	UG/KG	13 U	12 U	12 U	11 U	12 U	11 U
2-BUTANONE	UG/KG	13 U	12 U	12 U	11 U	12 U	11 U
2-HEXANONE	UG/KG	13 U	12 U	12 U	11 U	12 U	11 U
3-CHLORO-1-PROPENE / ALLYL CHLORIDE	UG/KG	13 U	12 U	12 U	11 U	12 U	11 U
4-METHYL-2-PENTANONE	UG/KG	13 U	12 U	12 U	11 U	12 U	11 U
ACETONE	UG/KG	340 E	12 U	12 U	11 U	110	28
ACETONITRILE	UG/KG	13 U	12 U	12 U	11 U	12 U	11 U
ACROLEIN	UG/KG	13 U	12 U	12 U	11 U	12 U	11 U
ACRYLONITRILE	UG/KG	13 U	12 U	12 U	11 U	12 U	11 U
BENZENE	UG/KG	13 U	12 U	12 U	11 U	12 U	11 U
BROMODICHLOROMETHANE	UG/KG	13 U	12 U	12 U	11 U	12 U	11 U
BROMOFORM	UG/KG	13 U	12 U	12 U	11 U	12 U	11 U
BROMOMETHANE	UG/KG	13 U	12 U	12 U	11 U	12 U	11 U
CARBON DISULFIDE	UG/KG	13 U	12 U	12 U	11 U	12 U	11 U
CARBON TETRACHLORIDE	UG/KG	13 U	12 U	12 U	11 U	12 U	11 U
CHLOROBENZENE	UG/KG	13 U	12 U	12 U	11 U	12 U	11 U
CHLOROETHANE	UG/KG	13 U	12 U	12 U	11 U	12 U	11 U
CHLOROFORM	UG/KG	13 U	12 U	12 U	11 U	12 U	11 U
CHLOROMETHANE	UG/KG	13 U	12 U	12 U	11 U	12 U	11 U
CIS-1,3-DICHLOROPROPENE	UG/KG	13 U	12 U	12 U	11 U	12 U	11 U
DIBROMOCHLOROMETHANE	UG/KG	13 U	12 U	12 U	11 U	12 U	11 U
DIBROMOMETHANE	UG/KG	13 U	12 U	12 U	11 U	12 U	11 U

TABLE 4
GEOPROBE SAMPLES:
ANALYTICAL RESULTS SUMMARY

Site ID Sample Depth Sample Date		1616B0104 3' - 4' 4/4/97	1616B0105 4' - 5' 4/4/97	1616B0204 3' - 4' 4/4/97	1616B0302 1' - 2' 4/4/97	1616B0402 1' - 2' 4/4/97	1616B0502 1' - 2' 4/4/97
DICHLORODIFLUOROMETHANE	UG/KG	13 U	12 U	12 U	11 U	12 U	11 U
ETHYL METHACRYLATE	UG/KG	13 U	12 U	12 U	11 U	12 U	11 U
ETHYLBENZENE	UG/KG	13 U	12 U	12 U	11 U	12 U	11 U
IODOMETHANE	UG/KG	13 U	12 U	12 U	11 U	12 U	11 U
ISOBUTYL ALCOHOL / ISOBUTANOL	UG/KG	13 U	12 U	12 U	11 U	12 U	11 U
METHACRYLONITRILE / 2-METHYL-2-PROPENENITRILE	UG/KG	13 U	12 U	12 U	11 U	12 U	11 U
METHYL METHACRYLATE/PLEXIGLASS	UG/KG	13 U	12 U	12 U	11 U	12 U	11 U
METHYLENE CHLORIDE	UG/KG	2 J	3 JB	3 J	11 U	2 J	2 J
PROPIONITRILE	UG/KG	13 U	12 U	12 U	11 U	12 U	11 U
STYRENE	UG/KG	13 U	12 U	12 U	11 U	12 U	11 U
TETRACHLOROETHENE	UG/KG	13 U	12 U	12 U	11 U	12 U	11 U
TOLUENE	UG/KG	1 J	12 U	12 U	11 U	12 U	11 U
TRANS-1,3-DICHLOROPROPENE	UG/KG	13 U	12 U	12 U	11 U	12 U	11 U
TRANS-1,4-DICHLORO-2-BUTENE	UG/KG	13 U	12 U	12 U	11 U	12 U	11 U
TRICHLOROETHENE	UG/KG	13 U	12 U	12 U	11 U	12 U	11 U
TRICHLOROFLUOROMETHANE	UG/KG	13 U	12 U	12 U	11 U	12 U	11 U
VINYL ACETATE	UG/KG	13 U	12 U	12 U	11 U	12 U	11 U
VINYL CHLORIDE	UG/KG	13 U	12 U	12 U	11 U	12 U	11 U
XYLENES	UG/KG	13 U	12 U	12 U	11 U	12 U	11 U
DIESEL RANGE ORGANICS	MG/KG	N/A	N/A	N/A	N/A	N/A	N/A

N/A = Not Analyzed
Data Qualifiers:
B= Analyte detected in blank
J= Estimated value below quantitation limit
U= Not detected

TABLE 4
GEOPROBE SAMPLES:
ANALYTICAL RESULTS SUMMARY

Site ID		1616B0503	1616B0505	1616B0602	1616B0605	1616B0704	1616B0804
Sample Depth		2' - 3'	4' - 5'	1' - 2'	4' - 5'	3' - 4'	3' - 4'
Sample Date		4/4/97	4/4/97	4/4/97	4/4/97	4/4/97	4/4/97
1,1,1,2-TETRACHLOROETHANE	UG/KG	11 U	12 U	14 U	11 U	12 U	13 U
1,1,1-TRICHLOROETHANE	UG/KG	11 U	12 U	14 U	11 U	12 U	13 U
1,1,2,2-TETRACHLOROETHANE	UG/KG	11 U	12 U	14 U	11 U	12 U	13 U
1,1,2-TRICHLOROETHANE	UG/KG	11 U	12 U	14 U	11 U	12 U	13 U
1,1-DICHLOROETHANE	UG/KG	11 U	12 U	14 U	11 U	12 U	13 U
1,1-DICHLOROETHENE	UG/KG	11 U	12 U	14 U	11 U	12 U	13 U
1,2,3-TRICHLOROPROPANE	UG/KG	11 U	12 U	14 U	11 U	12 U	13 U
1,2-DIBROMO-3-CHLOROPROPANE	UG/KG	11 U	12 U	14 U	11 U	12 U	13 U
1,2-DIBROMOETHANE	UG/KG	11 U	12 U	14 U	11 U	12 U	13 U
1,2-DICHLOROETHANE	UG/KG	11 U	12 U	14 U	11 U	12 U	13 U
1,2-DICHLOROETHYLENE (CIS AND TRANS ISOMERS)	UG/KG	11 U	12 U	14 U	11 U	12 U	13 U
1,2-DICHLOROPROPANE	UG/KG	11 U	12 U	14 U	11 U	12 U	13 U
1,4-DIOXANE	UG/KG	11 U	12 U	14 U	11 U	12 U	13 U
2-BUTANONE	UG/KG	11 U	12 U	14 U	11 U	12 U	13 U
2-HEXANONE	UG/KG	11 U	12 U	14 U	11 U	12 U	13 U
3-CHLORO-1-PROPENE / ALLYL CHLORIDE	UG/KG	11 U	12 U	14 U	11 U	12 U	13 U
4-METHYL-2-PENTANONE	UG/KG	11 U	12 U	14 U	11 U	12 U	13 U
ACETONE	UG/KG	11 U	12 U	67	78	72	68
ACETONITRILE	UG/KG	11 U	12 U	14 U	11 U	12 U	13 U
ACROLEIN	UG/KG	11 U	12 U	14 U	11 U	12 U	13 U
ACRYLONITRILE	UG/KG	11 U	12 U	14 U	11 U	12 U	13 U
BENZENE	UG/KG	11 U	12 U	14 U	11 U	12 U	13 U
BROMODICHLOROMETHANE	UG/KG	11 U	12 U	14 U	11 U	12 U	13 U
BROMOFORM	UG/KG	11 U	12 U	14 U	11 U	12 U	13 U
BROMOMETHANE	UG/KG	11 U	12 U	14 U	11 U	12 U	13 U
CARBON DISULFIDE	UG/KG	11 U	12 U	14 U	11 U	12 U	13 U
CARBON TETRACHLORIDE	UG/KG	11 U	12 U	14 U	11 U	12 U	13 U
CHLOROBENZENE	UG/KG	11 U	12 U	14 U	11 U	12 U	13 U
CHLOROETHANE	UG/KG	11 U	12 U	14 U	11 U	12 U	13 U
CHLOROFORM	UG/KG	11 U	12 U	14 U	11 U	12 U	13 U
CHLOROMETHANE	UG/KG	11 U	12 U	14 U	11 U	12 U	13 U
CIS-1,3-DICHLOROPROPENE	UG/KG	11 U	12 U	14 U	11 U	12 U	13 U
DIBROMOCHLOROMETHANE	UG/KG	11 U	12 U	14 U	11 U	12 U	13 U
DIBROMOMETHANE	UG/KG	11 U	12 U	14 U	11 U	12 U	13 U

TABLE
GEOPROBE SAMPLES:
ANALYTICAL RESULTS SUMMARY

Site ID Sample Depth Sample Date		1616B0503 2' - 3' 4/4/97	1616B0505 4' - 5' 4/4/97	1616B0602 1' - 2' 4/4/97	1616B0605 4' - 5' 4/4/97	1616B0704 3' - 4' 4/4/97	1616B0804 3' - 4' 4/4/97
DICHLORODIFLUOROMETHANE	UG/KG	11 U	12 U	14 U	11 U	12 U	13 U
ETHYL METHACRYLATE	UG/KG	11 U	12 U	14 U	11 U	12 U	13 U
ETHYLBENZENE	UG/KG	11 U	12 U	14 U	11 U	12 U	13 U
IODOMETHANE	UG/KG	11 U	12 U	14 U	11 U	12 U	13 U
ISOBUTYL ALCOHOL / ISOBUTANOL	UG/KG	11 U	12 U	14 U	11 U	12 U	13 U
METHACRYLONITRILE / 2-METHYL-2-PROPENENITRILE	UG/KG	11 U	12 U	14 U	11 U	12 U	13 U
METHYL METHACRYLATE/PLEXIGLASS	UG/KG	11 U	12 U	14 U	11 U	12 U	13 U
METHYLENE CHLORIDE	UG/KG	2 J	2 J	14 U	2 J	3 JB	2 J
PROPIONITRILE	UG/KG	11 U	12 U	14 U	11 U	12 U	13 U
STYRENE	UG/KG	11 U	12 U	14 U	11 U	12 U	13 U
TETRACHLOROETHENE	UG/KG	11 U	12 U	14 U	11 U	12 U	13 U
TOLUENE	UG/KG	11 U	12 U	14 U	11 U	12 U	13 U
TRANS-1,3-DICHLOROPROPENE	UG/KG	11 U	12 U	14 U	11 U	12 U	13 U
TRANS-1,4-DICHLORO-2-BUTENE	UG/KG	11 U	12 U	14 U	11 U	12 U	13 U
TRICHLOROETHENE	UG/KG	11 U	12 U	14 U	11 U	12 U	13 U
TRICHLOROFLUOROMETHANE	UG/KG	11 U	12 U	14 U	11 U	12 U	13 U
VINYL ACETATE	UG/KG	11 U	12 U	14 U	11 U	12 U	13 U
VINYL CHLORIDE	UG/KG	11 U	12 U	14 U	11 U	12 U	13 U
XYLENES	UG/KG	11 U	12 U	14 U	11 U	12 U	13 U
DIESEL RANGE ORGANICS	MG/KG	N/A	N/A	N/A	N/A	N/A	N/A

N/A = Not Analyzed
Data Qualifiers:
B= Analyte detected in blank
J= Estimated value below quantitation limit
U= Not detected

TABLE 4
GEOPROBE SAMPLES:
ANALYTICAL RESULTS SUMMARY

Site ID		1616B0904	1616B1004	1616B1005	1616B1104	1616B1106	1616B1202
Sample Depth		3' - 4'	3' - 4'	4' - 5'	3' - 4'	5' - 6'	1' - 2'
Sample Date		4/4/97	4/4/97	4/4/97	4/4/97	4/4/97	4/4/97
1,1,1,2-TETRACHLOROETHANE	UG/KG	12 U	12 U	120 U	13 U	13 U	12 U
1,1,1-TRICHLOROETHANE	UG/KG	12 U	12 U	120 U	13 U	13 U	12 U
1,1,2,2-TETRACHLOROETHANE	UG/KG	12 U	12 U	120 U	13 U	13 U	12 U
1,1,2-TRICHLOROETHANE	UG/KG	12 U	12 U	120 U	13 U	13 U	12 U
1,1-DICHLOROETHANE	UG/KG	12 U	12 U	120 U	13 U	13 U	12 U
1,1-DICHLOROETHENE	UG/KG	12 U	12 U	120 U	13 U	13 U	12 U
1,2,3-TRICHLOROPROPANE	UG/KG	12 U	12 U	120 U	13 U	13 U	12 U
1,2-DIBROMO-3-CHLOROPROPANE	UG/KG	12 U	12 U	120 U	13 U	13 U	12 U
1,2-DIBROMOETHANE	UG/KG	12 U	12 U	120 U	13 U	13 U	12 U
1,2-DICHLOROETHANE	UG/KG	12 U	12 U	120 U	13 U	13 U	12 U
1,2-DICHLOROETHYLENE (CIS AND TRANS ISOMERS)	UG/KG	12 U	12 U	120 U	13 U	13 U	12 U
1,2-DICHLOROPROPANE	UG/KG	12 U	12 U	120 U	13 U	13 U	12 U
1,4-DIOXANE	UG/KG	12 U	12 U	120 U	13 U	13 U	12 U
2-BUTANONE	UG/KG	12 U	12 U	120 U	13 U	13 U	12 U
2-HEXANONE	UG/KG	12 U	12 U	120 U	13 U	13 U	12 U
3-CHLORO-1-PROPENE / ALLYL CHLORIDE	UG/KG	12 U	12 U	120 U	13 U	13 U	12 U
4-METHYL-2-PENTANONE	UG/KG	12 U	12 U	120 U	13 U	13 U	12 U
ACETONE	UG/KG	92	73	2400	13 U	110	12 U
ACETONITRILE	UG/KG	12 U	12 U	120 U	13 U	13 U	12 U
ACROLEIN	UG/KG	12 U	12 U	120 U	13 U	13 U	12 U
ACRYLONITRILE	UG/KG	12 U	12 U	120 U	13 U	13 U	12 U
BENZENE	UG/KG	12 U	12 U	120 U	13 U	13 U	12 U
BROMODICHLOROMETHANE	UG/KG	12 U	12 U	120 U	13 U	13 U	12 U
BROMOFORM	UG/KG	12 U	12 U	120 U	13 U	13 U	12 U
BROMOMETHANE	UG/KG	12 U	12 U	120 U	13 U	13 U	12 U
CARBON DISULFIDE	UG/KG	12 U	12 U	120 U	13 U	13 U	12 U
CARBON TETRACHLORIDE	UG/KG	12 U	12 U	120 U	13 U	13 U	12 U
CHLOROBENZENE	UG/KG	12 U	12 U	120 U	13 U	13 U	12 U
CHLOROETHANE	UG/KG	12 U	12 U	120 U	13 U	13 U	12 U
CHLOROFORM	UG/KG	12 U	12 U	120 U	13 U	13 U	12 U
CHLOROMETHANE	UG/KG	12 U	12 U	120 U	13 U	13 U	12 U
CIS-1,3-DICHLOROPROPENE	UG/KG	12 U	12 U	120 U	13 U	13 U	12 U
DIBROMOCHLOROMETHANE	UG/KG	12 U	12 U	120 U	13 U	13 U	12 U
DIBROMOMETHANE	UG/KG	12 U	12 U	120 U	13 U	13 U	12 U

TABLE 4
GEOPROBE SAMPLES:
ANALYTICAL RESULTS SUMMARY

Site ID		1616B0904	1616B1004	1616B1005	1616B1104	1616B1106	1616B1202
Sample Depth		3' - 4'	3' - 4'	4' - 5'	3' - 4'	5' - 6'	1' - 2'
Sample Date		4/4/97	4/4/97	4/4/97	4/4/97	4/4/97	4/4/97
DICHLORODIFLUOROMETHANE	UG/KG	12 U	12 U	120 U	13 U	13 U	12 U
ETHYL METHACRYLATE	UG/KG	12 U	12 U	120 U	13 U	13 U	12 U
ETHYLBENZENE	UG/KG	12 U	12 U	120 U	13 U	13 U	12 U
IODOMETHANE	UG/KG	12 U	12 U	120 U	13 U	13 U	12 U
ISOBUTYL ALCOHOL / ISOBUTANOL	UG/KG	12 U	12 U	120 U	13 U	13 U	12 U
METHACRYLONITRILE / 2-METHYL-2-PROPENENITRILE	UG/KG	12 U	12 U	120 U	13 U	13 U	12 U
METHYL METHACRYLATE/PLEXIGLASS	UG/KG	12 U	12 U	120 U	13 U	13 U	12 U
METHYLENE CHLORIDE	UG/KG	12 U	2 J	32 JB	3 JB	2 JB	2 JB
PROPIONITRILE	UG/KG	12 U	12 U	120 U	13 U	13 U	12 U
STYRENE	UG/KG	12 U	12 U	120 U	13 U	13 U	12 U
TETRACHLOROETHENE	UG/KG	12 U	12 U	120 U	13 U	13 U	12 U
TOLUENE	UG/KG	12 U	12 U	120 U	13 U	13 U	12 U
TRANS-1,3-DICHLOROPROPENE	UG/KG	12 U	12 U	120 U	13 U	13 U	12 U
TRANS-1,4-DICHLORO-2-BUTENE	UG/KG	12 U	12 U	120 U	13 U	13 U	12 U
TRICHLOROETHENE	UG/KG	12 U	12 U	120 U	13 U	13 U	12 U
TRICHLOROFLUOROMETHANE	UG/KG	12 U	12 U	120 U	13 U	13 U	12 U
VINYL ACETATE	UG/KG	12 U	12 U	120 U	13 U	13 U	12 U
VINYL CHLORIDE	UG/KG	12 U	12 U	120 U	13 U	13 U	12 U
XYLENES	UG/KG	12 U	12 U	120 U	13 U	13 U	12 U
DIESEL RANGE ORGANICS	MG/KG	N/A	N/A	7 J	1 J	7 J	N/A

N/A = Not Analyzed
Data Qualifiers:
B= Analyte detected in blank
J= Estimated value below quantitation limit
U= Not detected

TABLE 5
ANALYTICAL RESULTS SUMMARY - WASTEPILE

	SAMPLE #	NSWC16/WP01	NSWC16/WP02
	SAMPLE DATE	9/24/97	9/24/97
	LOCATION	Wastepile-West	Wastepile-East
COMPOUND	METHOD		
VOLATILES (UG/KG)			
Trichloroethylene	OLM03.1	11 U	12 U
EXPLOSIVES (MG/KG)			
HMX	SW 8330	3.4 U	3.7 U
1,3,5-Trinitrobenzene	SW 8330	1.3 BJ	1.1 BJ
RDX	SW 8330	2.8 U	0.92 BJ
1,3-Dinitrotoluene	SW 8330	1.7 U	1.8 U
2,4,6-Trinitrotoluene	SW 8330	1.7 U	1.8 U
Tetryl	SW 8330	2.8 U	3.1 U
Nitrobenzene	SW 8330	1.7 U	1.8 U
2,4-Dinitrotoluene	SW 8330	0.56 U	0.62 U
2,6-Dinitrotoluene	SW 8330	1.7 U	1.8 U
2-Amino-4,6-dinitrotoluene	SW 8330	1.7 U	1.8 U
4-Amino-2,6-dinitrotoluene	SW 8330	0.54 U	0.59 U
2-Nitrotoluene	SW 8330	5.4 U	5.8 U
4-Nitrotoluene	SW 8330	5.4 U	5.8 U
3-Nitrotoluene	SW 8330	1.3 U	1.4 U
METALS (MG/KG)			
Antimony	SW 6010	0.33 U	0.36 U
Arsenic	SW 6010	6.6	4.9
Barium	SW 6010	42.1	47.9
Beryllium	SW 6010	0.35 B	0.31 B
Cadmium	SW 6010	0.07 B	0.04 U
Chromium	SW 6010	13.6	14.8
Copper	SW 6010	12.3	13.7
Lead	SW 6010	12.4	12.9
Mercury	SW 7470	0.06 U	0.06 U
Nickel	SW 6010	7.9	10.6
Selenium	SW 6010	0.95	1.5
Silver	SW 6010	0.09 U	0.10 U
Thallium	SW 6010	0.56 U	0.62 U
Vanadium	SW 6010	25.9	24.4
Zinc	SW 6010	34.3 E	44.8 E
Tin	SW 6010	1.1 B	1.7 B
TCLP METALS (UG/L)			
Lead	SW 6010	4.6	11.1
PCBS (UG/KG)			
Aroclor-1016	SW 8080	740 U	41 U
Aroclor-1221	SW 8080	1500 U	83 U
Aroclor-1232	SW 8080	740 U	41 U
Aroclor-1242	SW 8080	740 U	41 U
Aroclor-1248	SW 8080	740 U	41 U
Aroclor-1254	SW 8080	20000	14 JP
Aroclor-1260	SW 8080	740 U	41 U

CHART 1 APPENDIX D NSWC CRANE

SWMU 16/16 CAST HIGH WEST SUMP TCE LEVELS

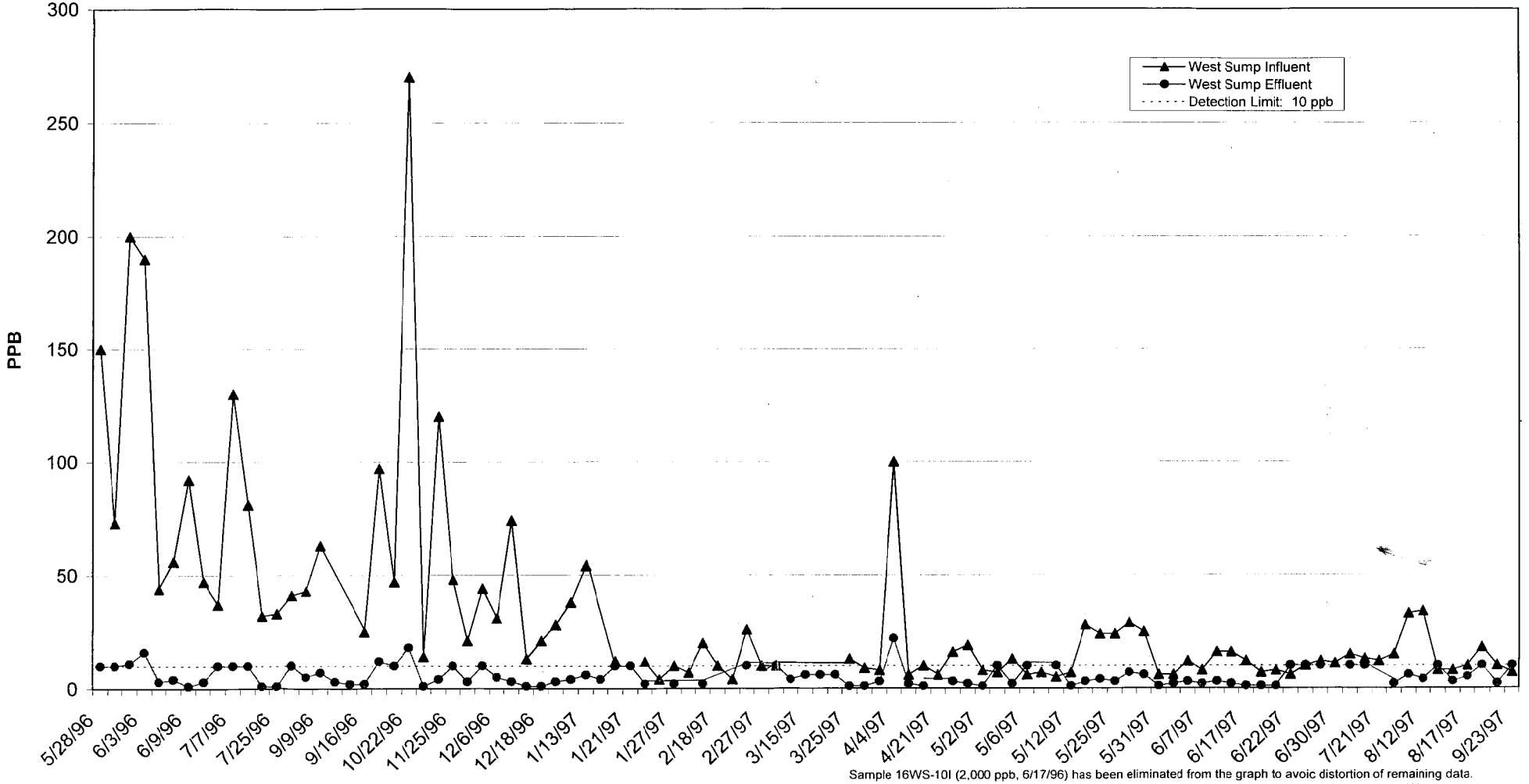

Sample 16WS-10I (2,000 ppb, 6/17/96) has been eliminated from the graph to avoic distortion of remaining data.
The West Sump Influent result for 4/4/97 is actually East sump water that was pumped into the West sump.
The laboratory detection limit for this analysis is 10 ppb. Any result flagged with a 'U" at 10 ppb or estimated below 10 ppb should be considered a non-detect result, with the following exceptions:
Influent results for 1/27/97, 2/27/97, 3/7/97, 4/19/97, 6/26/97, and 8/17/97, and Effluent results for 7/7/96, 11/25/96, and 1/21/97 were detected at 10 ppb.

CHART 2 APPENDIX D NSWC CRANE

SWMU 16/16 CAST HIGH TCE LEVELS: EAST SUMP VS. WEST INFLUENT

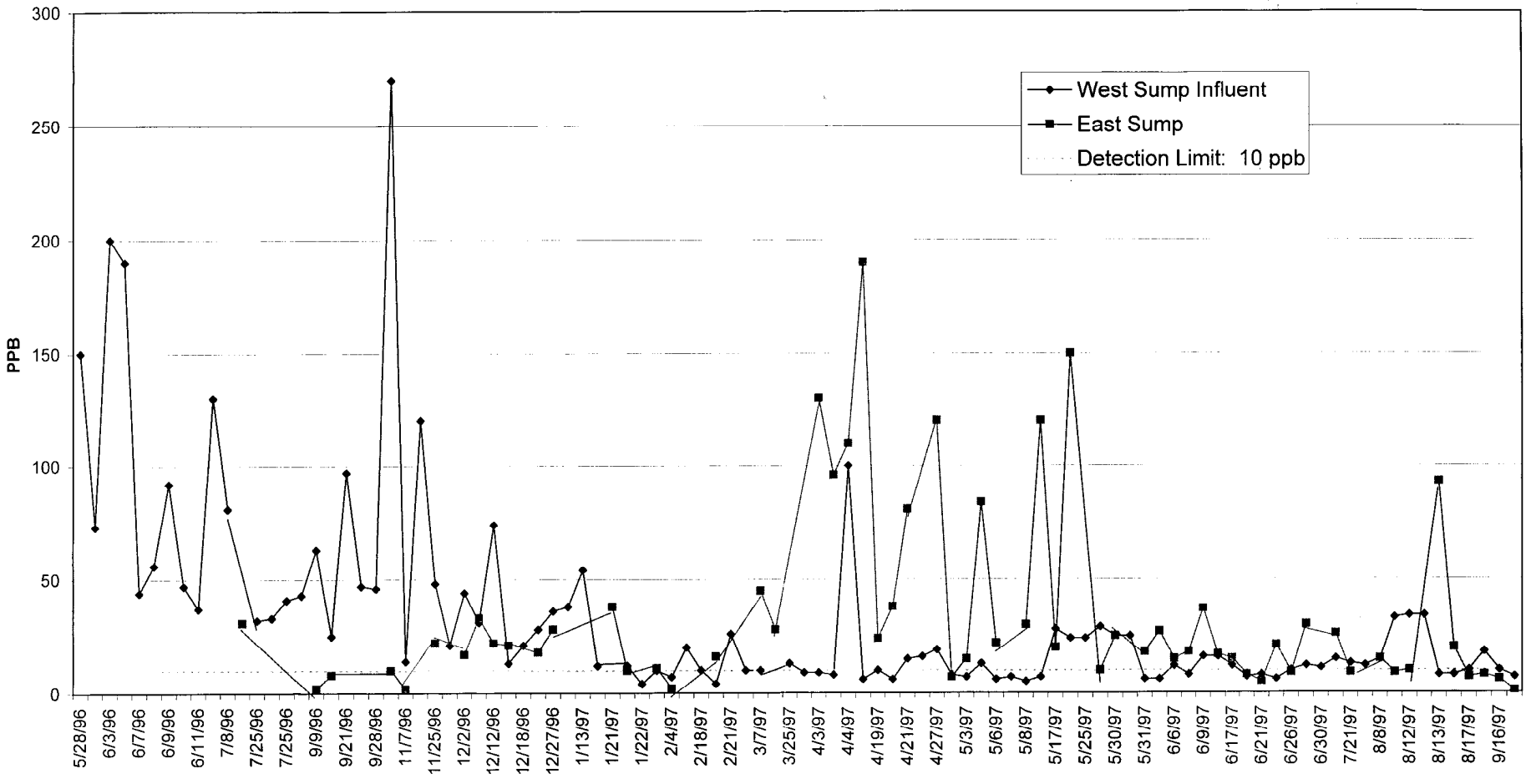

Sample 16WS-10I (2,000 ppb, 6/17/96) has been eliminated from the graph to avoic distortion of remaining data.
The West Sump Influent result for 4/4/97 is actually East sump water that was pumped into the West sump.
The laboratory detection limit for this analysis is 10 ppb. Any result flagged with a 'U" at 10 ppb or estimated below 10 ppb should be considered a non-detect result, with the following exceptions:
West Sump Influent results for 1/27/97, 2/27/97, 3/7/97, 4/19/97, 6/26/97, and 8/17/97, and East Sump results for 10/22/96, and 8/12/97 were detected at 10 ppb.

Drinking Water Standards and Health Advisories

October 1996

Chemicals	Standards			Status HA	Health Advisories								Cancer Group
					10-kg Child			70-kg Adult					
	Status Reg.	MCLG (mg/l)	MCL (mg/l)		One-day (mg/l)	Ten-day (mg/l)	Longer-term (mg/l)	Longer-term (mg/l)	RfD (mg/kg/day)	DWEL (mg/l)	Lifetime (mg/l)	mg/l at 10^{-4} Cancer Risk	
Tebuthiuron	-	-	-	F	3	3	0.7	2	0.07	2	0.5	-	D
Terbacil	-	-	-	F	0.3	0.3	0.3	0.9	0.01	0.4	0.09	-	E
Terbufos	-	-	-	F	0.005	0.005	0.001	0.005	0.00013	0.006	0.0009	-	D
Tetrachloroethane (1,1,1,2-)	L	-	-	F	2	2	0.9	3	0.03	1	0.07	0.1	C
Tetrachloroethane (1,1,2,2-)	L	-	-	D	-	-	-	-	-	-	-	-	-
Tetrachloroethylene	F	zero	0.005	F	2	2	1	6	0.01	0.5	-	0.07	-
Tetranitromethane	-	-	-	**	-	-	-	-	-	-	-	-	-
Toluene	F	1	1	F	20	2	2	7	0.2	7	1	-	D
Toxaphene	F	zero	0.003	F	-	-	-	-	0.1*	-	-	0.003	B2
2,4,5-TP	F	0.05	0.05	F	0.2	0.2	0.07	0.3	0.0015	0.3	0.05	-	D
1,1,2-Trichloro-1,2,2-trifluoroethane	-	-	-	-	-	-	-	-	-	-	-	-	-
Trichloroacetic acid	P	0.3	0.06**	D	4	4	4	13	0.1	4.0	0.3	-	C
Trichloroacetonitrile	L	-	-	D	0.05	0.05	-	-	-	-	-	-	-
Trichlorobenzene (1,2,4-)	F	0.07	0.07	F	0.1	0.1	0.1	0.5	0.01	0.04	0.07	-	D
Trichlorobenzene (1,3,5-)	-	-	-	F	0.6	0.6	0.6	2	0.001	0.2	0.04	-	D
Trichloroethane (1,1,1-)	F	0.2	0.2	F	100	40	40	100	0.031	1	0.2	-	D
Trichloroethane (1,1,2-)	F	0.003	0.005	F	0.6	0.4	0.4	1	0.001	0.1	0.003	-	C
Trichloroethanol (2,2,2-)	L	-	-	-	-	-	-	-	-	-	-	-	-
Trichloroethylene	F	zero	0.005	F	-	-	-	-	-	0.3	-	0.3	B2
Trichlorophenol (2,4,6-)	L	-	-	D	-	-	-	-	-	-	-	0.3	B2
Trichloropropane (1,1,1-)	-	-	-	D	-	-	-	-	-	-	-	-	-
Trichloropropane (1,2,3-)	L	-	-	F	0.6	0.6	0.6	2	0.001	0.2	0.04	0.5	B2
Trifluralin	L	-	-	F	0.08	0.08	0.08	0.3	0.0075	0.3	0.005	0.5	C
Trimethylbenzene (1,2,4-)	-	-	-	D	-	-	-	-	-	-	-	-	-
Trimethylbenzene (1,3,5-)	-	-	-	D	-	-	-	-	-	-	-	-	-
Trinitroglycerol	-	-	-	F	0.005	0.005	0.005	0.005	-	-	0.005	-	-
Trinitrotoluene	-	-	-	F	0.02	0.02	0.02	0.02	0.0005	0.02	0.002	0.1	C
Vinyl chloride	F	zero	0.002	F	3	3	0.01	0.05	-	-	-	0.0015	A
Xylenes	F	10	10	F	40	40	40	100	2	60	10	-	D

* Under review.

** A HA will not be developed due to insufficient data; a "Database Deficiency Report" has been published.

** Total for all haloacetic acids cannot exceed 0.06 mg/l level.

ENVIRONMENTAL PROTECTION SAMPLING RECORD

Department of the Navy
Naval Surface Warfare Center
Crane, IN 47522

SAMPLING SITE	PURPOSE
B-146	Test for VOCs
SAMPLE DATE	**TIME**
11/7/96	1400

SAMPLE NUMBER	SAMPLE NUMBER	SAMPLE NUMBER
146-30-11076	~~146-31-11076~~	
LOCATION	LOCATION	LOCATION
~~East~~ west Sump	~~East Sump~~	
OBSERVATIONS	OBSERVATIONS	OBSERVATIONS
Time 1400	~~Time 1400~~	
GRAB X COMPOSITE	GRAB ~~X~~ COMPOSITE	GRAB COMPOSITE
ANALYTICAL PARAMETERS	ANALYTICAL PARAMETERS	ANALYTICAL PARAMETERS
VOCs (Trichloroethane)		

SAMPLER'S SIGNATURE	CODE
Christine D. Freeman	095
DATE SAMPLES SENT	**ANALYTICAL LAB**
	ATEC Comarco contract

REMARKS

Comarco
Route 2, Box 378
Bloomfield IN 47424

Attn : Trisha Herndon

Cust Proj #: 2108-9600318

Lab Proj #: 96115651
Date : 11/08/1996

Date Received : 11/08/1996
Date Completed: 11/08/1996

REPORT OF ANALYSIS

ATC Sample Number	Client Sample Description	ATC Sample Number	Client Sample Description
96-021050	146-30-11076	96-021185	Method Blank

This report shall not be reproduced except in full, without approval of the Laboratory.

Mary McGill-Maxwell
Certified By
Mary R. McGill-Maxwell

Date of Report: 11/08/96
Project Number: 96115651
Lab ID: 96-0021050
Date Collected: 11/07/96 00:00
Collected By: Client
Date Received: 11/08/96 08:45
C of C Number:
Temperature: Received on Ice

Attention: Trisha Herndon
Comarco
Route 2, Box 378
Bloomfield IN 47424

Sample Desc: 146-30-11076

	Result	Unit	PQL	Procedure	Test Date
ORGANIC					
GCMS VOLATILES					
1,1,1-Trichloroethane	<5	ug/L	5	SW 8240	11/08/96
1,1,2,2-Tetrachloroethane	<5	ug/L	5	SW 8240	11/08/96
1,1,2-Trichloroethane	<5	ug/L	5	SW 8240	11/08/96
1,1-Dichloroethane	<5	ug/L	5	SW 8240	11/08/96
1,1-Dichloroethene	<5	ug/L	5	SW 8240	11/08/96
1,2,3-Trichloropropane	<100	ug/L	100	SW 8240	11/08/96
1,2-Dichloroethane	<5	ug/L	5	SW 8240	11/08/96
1,2-Dichloropropane	<5	ug/L	5	SW 8240	11/08/96
2 Hexanone	<50	ug/L	50	SW 8240	11/08/96
2-Chloroethyl Vinyl Ether	<10	ug/L	10	SW 8240	11/08/96
Acetone	<100	ug/L	100	SW 8240	11/08/96
Acrolein	<10	ug/L	10	SW 8240	11/08/96
Acrylonitrile	<100	ug/L	100	SW 8240	11/08/96
Benzene	<5	ug/L	5	SW 8240	11/08/96
Bromodichloromethane	<5	ug/L	5	SW 8240	11/08/96
Bromoform	<5	ug/L	5	SW 8240	11/08/96
Bromomethane (Methyl Bromide)	<10	ug/L	10	SW 8240	11/08/96
cis-1,2-Dichloroethene	<5	ug/L	5	SW 8240	11/08/96
cis-1,3-Dichloropropene	<5	ug/L	5	SW 8240	11/08/96
Carbon Tetrachloride	<5	ug/L	5	SW 8240	11/08/96
Chlorobenzene	<5	ug/L	5	SW 8240	11/08/96
Chloroethane	<5	ug/L	5	SW 8240	11/08/96
Chloroform	<5	ug/L	5	SW 8240	11/08/96
Chloromethane	<5	ug/L	5	SW 8240	11/08/96
Carbon Disulfide	<100	ug/L	100	SW 8240	11/08/96
Dichlorodifluoromethane (Freon 12)	<100	ug/L	100	SW 8240	11/08/96
Dibromochloromethane	<5	ug/L	5	SW 8240	11/08/96
Ethylbenzene	<5	ug/L	5	SW 8240	11/08/96
Ethyl Methacrylate	<100	ug/L	100	SW 8240	11/08/96
Iodomethane	<100	ug/L	100	SW 8240	11/08/96
Methylene Chloride (Dichloromethane)	<5	ug/L	5	SW 8240	11/08/96
2-Butanone (Methyl Ethyl Ketone)	<100	ug/L	100	SW 8240	11/08/96
4-Methyl-2-pentanone (MIBK)	<50	ug/L	50	SW 8240	11/08/96
o-Xylene	<5	ug/L	5	SW 8240	11/08/96
m,p-Xylene	<5	ug/L	5	SW 8240	11/08/96
Styrene	<5	ug/L	5	SW 8240	11/08/96
trans-1,2-Dichloroethene	<5	ug/L	5	SW 8240	11/08/96
trans-1,3-Dichloropropene	<5	ug/L	5	SW 8240	11/08/96
trans-1,4-Dichloro-2-Butene	<100	ug/L	100	SW 8240	11/08/96
Trichloroethene	18	ug/L	5	SW 8240	11/08/96
Trichlorofluoromethane (Freon 11)	<10	ug/L	10	SW 8240	11/08/96
Tetrachloroethene	<5	ug/L	5	SW 8240	11/08/96
Toluene	<5	ug/L	5	SW 8240	11/08/96
Vinyl Acetate	<50	ug/L	50	SW 8240	11/08/96
Vinyl Chloride	<10	ug/L	10	SW 8240	11/08/96

Date of Report:	11/08/96
Project Number:	96115651
Lab ID:	96-0021185
Date Collected:	11/08/96 09:00
Collected By:	Client
Date Received:	11/08/96 08:45
C of C Number:	
Temperature:	Received on Ice

Attention: Trisha Herndon
Comarco
Route 2, Box 378
Bloomfield IN 47424

Sample Desc: Method Blank

	Result	Unit	PQL	Procedure	Test Date
ORGANIC					
GCMS VOLATILES					
1,1,1-Trichloroethane	<5	ug/L	5	SW 8240	11/08/96
1,1,2,2-Tetrachloroethane	<5	ug/L	5	SW 8240	11/08/96
1,1,2-Trichloroethane	<5	ug/L	5	SW 8240	11/08/96
1,1-Dichloroethane	<5	ug/L	5	SW 8240	11/08/96
1,1-Dichloroethene	<5	ug/L	5	SW 8240	11/08/96
1,2,3-Trichloropropane	<100	ug/L	100	SW 8240	11/08/96
1,2-Dichloroethane	<5	ug/L	5	SW 8240	11/08/96
1,2-Dichloropropane	<5	ug/L	5	SW 8240	11/08/96
2 Hexanone	<50	ug/L	50	SW 8240	11/08/96
2-Chloroethyl Vinyl Ether	<10	ug/L	10	SW 8240	11/08/96
Acetone	<100	ug/L	100	SW 8240	11/08/96
Acrolein	<10	ug/L	10	SW 8240	11/08/96
Acrylonitrile	<100	ug/L	100	SW 8240	11/08/96
Benzene	<5	ug/L	5	SW 8240	11/08/96
Bromodichloromethane	<5	ug/L	5	SW 8240	11/08/96
Bromoform	<5	ug/L	5	SW 8240	11/08/96
Bromomethane (Methyl Bromide)	<10	ug/L	10	SW 8240	11/08
cis-1,2-Dichloroethene	<5	ug/L	5	SW 8240	11/08/96
cis-1,3-Dichloropropene	<5	ug/L	5	SW 8240	11/08/96
Carbon Tetrachloride	<5	ug/L	5	SW 8240	11/08/96
Chlorobenzene	<5	ug/L	5	SW 8240	11/08/96
Chloroethane	<5	ug/L	5	SW 8240	11/08/96
Chloroform	<5	ug/L	5	SW 8240	11/08/96
Chloromethane	<5	ug/L	5	SW 8240	11/08/96
Carbon Disulfide	<100	ug/L	100	SW 8240	11/08/96
Dichlorodifluoromethane (Freon 12)	<100	ug/L	100	SW 8240	11/08/96
Dibromochloromethane	<5	ug/L	5	SW 8240	11/08/96
Ethylbenzene	<5	ug/L	5	SW 8240	11/08/96
Ethyl Methacrylate	<100	ug/L	100	SW 8240	11/08/96
Iodomethane	<100	ug/L	100	SW 8240	11/08/96
Methylene Chloride (Dichloromethane)	<5	ug/L	5	SW 8240	11/08/96
2-Butanone (Methyl Ethyl Ketone)	<100	ug/L	100	SW 8240	11/08/96
4-Methyl-2-pentanone (MIBK)	<50	ug/L	50	SW 8240	11/08/96
o-Xylene	<5	ug/L	5	SW 8240	11/08/96
m,p-Xylene	<5	ug/L	5	SW 8240	11/08/96
Styrene	<5	ug/L	5	SW 8240	11/08/96
trans-1,2-Dichloroethene	<5	ug/L	5	SW 8240	11/08/96
trans-1,3-Dichloropropene	<5	ug/L	5	SW 8240	11/08/96
trans-1,4-Dichloro-2-Butene	<100	ug/L	100	SW 8240	11/08/96
Trichloroethene	<5	ug/L	5	SW 8240	11/08/96
Trichlorofluoromethane (Freon 11)	<10	ug/L	10	SW 8240	11/08/96
Tetrachloroethene	<5	ug/L	5	SW 8240	11/08/96
Toluene	<5	ug/L	5	SW 8240	11/08/96
Vinyl Acetate	<50	ug/L	50	SW 8240	11/08/96
Vinyl Chloride	<10	ug/L	10	SW 8240	11/08/96

CHAIN OF CUSTODY 96115651

CRANE DIVISION, NAVAL SURFACE WARFARE CENTER
ENVIRONMENTAL PROTECTION DEPT.
NAVSURFWARCENDIV 5090/6 (REV. 5/93)

SAMPLING DATE	SAMPLE I.D.	CONTAINER (PARAMETERS)
11/7/96	146-30-11076	VOCs (Trichlorethene) 960021050
	~~146-31-11076~~	

SAMPLER PREPARER (SIGNATURE)	TRANSFERRED TO (SIGNATURE)	DATE	TIME	ORGANIZATION
Christine D. Freeman		11/8/96		
	[signature]	11/08/96	0620AM	COMARCO
	[signature]	11-8-96	8:45	ATC

ENVIRONMENTAL PROTECTION SAMPLING RECORD

Department of the Navy
Naval Surface Warfare Center
Crane, IN 47522

SAMPLING SITE	PURPOSE
BLDG 146 WEST SUMP	Check for ~~[illegible]~~ TETRACHLOROETHENES
SAMPLE DATE: 4/19/96	TIME

SAMPLE NUMBER	SAMPLE NUMBER	SAMPLE NUMBER
146-01-04196	146-02-04196	146-04-04196 146-03-04196
LOCATION	LOCATION	LOCATION
Taken @ ≈ 1300 hrs.	Taken @ ≈ 1300 hrs.	Taken @ 2340 hrs.
OBSERVATIONS	OBSERVATIONS	OBSERVATIONS
≈ 3 feet of water in sump	≈ 3 feet of water in sump	Taken when sump overflowed during heavy rain 2 SAMPLES
GRAB ✓ COMPOSITE	GRAB ✓ COMPOSITE	GRAB ✓ COMPOSITE
ANALYTICAL PARAMETERS	ANALYTICAL PARAMETERS	ANALYTICAL PARAMETERS
~~[illegible]~~ VOCs	~~[illegible]~~ VOCs	~~[illegible]~~ VOCs

SAMPLER'S SIGNATURE	CODE
T. BRENT / J. AUDIS	095
DATE SAMPLES SENT: 4/22/96	ANALYTICAL LAB: SYNERGRCS

REMARKS

461238

NSWC, CRANE
CHAIN OF CUSTODY FORM
GENERAL

Contr. Number 011

Client:
NAVSURFWARCENDIV CRANE
Address
COMMANDER
CODE 09513 BLDG 3260
NAVSURFWARCENDIV
300 HIGHWAY 361, CRANE IN 47522

Report to: Jim Market
Phone No. (812)-854-6161
Fax No. (812)-854-4177

Parameters	Code	Preservative Used	Hold Time	Name of Collector	Time of Collection	Sample ID	Plastic or Glass	No. Shipped	Rush 0008AA	Rush 0008AB
0001AL VOC'S	0952	NA -01		JA		146-01-04196 -01	G	1	Rush	
0001AL VOC'S	0952	NA		JA		146-02-04196	G	1		
0001AL VOC'S	09510	NA -02		TB		146-03-04196 -02	G	1		
0001AL VOC'S	09510	NA		TB		146-04-04196	G	1		

Relinquished by:	Date/Time	Received by:	Relinquished by:	Date/Time	Received by:
Jim Andis	4/02/96 0830	Fed. Ex.			
Relinquished by:	Date/Time	Received by:	Relinquished by:	Date/Time	Received by:
Fed. Ex.	4/23/96 1300	[illegible]			

Synergic ANALYTICS, INC.

Rec'd. 5/1/96
FAX COPY REC'D. 4/24/96

April 24, 1996

ANALYTICAL REPORT

Total of 7 pages including this cover sheet.

Site Name:

Project Description:
2 DRINKING WATER SAMPLES FROM NAVSURFWARCENDIV CRANE

Client Project Number: 011

Attention: **Thomas Brent**
Commander
Crane Division N.S.W.C.
Code 09510 Building 3260
Crane, IN 47522-5009

Phone: FAX:

REPORT APPROVED BY: John F. Addy / Laboratory Supervisor

Laboratory Project# 961238

450 54th Street S.W., Grand Rapids, Michigan 49548-5617 / PHONE: (616) 538-8700 FAX: (616) 538-9055

Expertise in chemical analysis

Synergic Analytics, Inc.

ANALYTICAL REPORT

ATTN: Thomas Brent
Crane Division N.S.W.C.
Code 09510 Building 3260
Crane, IN 47522-5009

LABORATORY ID# 961238-01
RECEIVED DATE: 4/23/96
ANALYSIS DATE: 4/24/96

CLIENT SAMPLE INFORMATION

Site Name:
Sampling Point: **146-01-04196 / 146-02-04196**
Project# 011 Sample# Sampling Date: 4/19/96

Analysis For
EPA 524.2 (SDWA Volatiles)

COMPOUND	DETECTION LEVEL	RESULT
1,1,1,2-Tetrachloroethane	1	<1
1,1,1-Trichloroethane	1	<1
1,1,2,2-Tetrachloroethane	1	<1
1,1,2-Trichloroethane	1	<1
1,1-Dichloroethane	1	<1
1,1-Dichloroethene	1	<1
1,1-Dichloropropene	1	<1
1,2,3-Trichlorobenzene	1	<1
1,2,3-Trichloropropane	1	<1
1,2,4-Trichlorobenzene	1	<1
1,2,4-Trimethylbenzene	1	<1
1,2-Dibromo-3-Chloropropane	1	<1
1,2-Dibromoethane	1	<1
1,2-Dichlorobenzene	1	<1
1,2-Dichloroethane	1	<1
1,2-Dichloropropane	1	<1
1,3,5-Trimethylbenzene	1	<1
1,3-Dichlorobenzene	1	<1
1,3-Dichloropropane	1	<1
1,4-Dichlorobenzene	1	<1
2,2-Dichloropropane	1	<1
2-Chlorotoluene	1	<1
4-Chlorotoluene	1	<1
Benzene	1	<1
Bromobenzene	1	<1

UNITS: ug/L

METHOD: EPA 524.2

'<' Indicates less than detection level.

High detection limit due to high target compound concentration.

450 54th St. S.W. Grand Rapids, MI 49548 Phone: (616)538-8700 FAX: (616)538-9055

ANALYTICAL REPORT

ATTN: Thomas Brent
Crane Division N.S.W.C.
Code 09510 Building 3260
Crane, IN 47522-5009

LABORATORY ID# 961238-01
RECEIVED DATE: 4/23/96
ANALYSIS DATE: 4/24/96

CLIENT SAMPLE INFORMATION

Site Name:
Sampling Point: **146-01-04196 / 146-02-04196**
Project# 011 Sample# Sampling Date: 4/19/96

Analysis For
EPA 524.2 (SDWA Volatiles)

COMPOUND	DETECTION LEVEL	RESULT
Bromochloromethane	1	<1
Bromodichloromethane	1	<1
Bromoform	1	<1
Bromomethane	1	<1
Carbon tetrachloride	1	<1
Chlorobenzene	1	<1
Chlorodibromomethane	1	<1
Chloroethane	1	<1
Chloroform	1	<1
Chloromethane	1	<1
Dibromomethane	1	<1
Dichlorodifluoromethane	1	<1
Ethylbenzene	1	<1
Fluorotrichloromethane	1	<1
Hexachlorobutadiene	1	<1
Isopropylbenzene	1	<1
Methylene chloride	1	<1
Naphthalene	1	<1
Sec-Butylbenzene	1	<1
Styrene	1	<1
Tetrachloroethene	1	<1
Toluene	1	<1
Trichloroethene	10	320
Vinyl chloride	1	<1
cis-1,2-Dichloroethene	1	6

UNITS: ug/L

METHOD: EPA 524.2

'<' Indicates less than detection level.

High detection limit due to high target compound concentration.

Synergic Analytics, Inc.

ANALYTICAL REPORT

ATTN: Thomas Brent
Crane Division N.S.W.C.
Code 09510 Building 3260
Crane, IN 47522-5009

LABORATORY ID# 961238-01
RECEIVED DATE: 4/23/96
ANALYSIS DATE: 4/24/96

CLIENT SAMPLE INFORMATION

Site Name:
Sampling Point: **146-01-04196 / 146-02-04196**
Project# 011 Sample# Sampling Date: 4/19/96

Analysis For
EPA 524.2 (SDWA Volatiles)

COMPOUND	DETECTION LEVEL	RESULT
cis-1,3-Dichloropropene	1	<1
m- And/Or p-Xylene	1	<1
n-Butylbenzene	1	<1
n-Propylbenzene	1	<1
o-Xylene	1	<1
p-Isopropyltoluene	1	<1
tert-Butylbenzene	1	<1
trans-1,2-Dichloroethene	1	<1
trans-1,3-Dichloropropene	1	<1

UNITS: ug/L

METHOD: EPA 524.2

'<' Indicates less than detection level.

High detection limit due to high target compound concentration.

450 54th St. S.W. Grand Rapids, MI 49548 Phone: (616)538-8700 FAX: (616)538-9055

ANALYTICAL REPORT

ATTN: Thomas Brent
Crane Division N.S.W.C.
Code 09510 Building 3260
Crane, IN 47522-5009

LABORATORY ID# 961238-02
RECEIVED DATE: 4/23/96
ANALYSIS DATE: 4/24/96

CLIENT SAMPLE INFORMATION

Site Name:
Sampling Point: **146-03-04196 / 146-04-04196**
Project# 011 Sample# Sampling Date: 4/19/96

Analysis For
EPA 524.2 (SDWA Volatiles)

COMPOUND	DETECTION LEVEL	RESULT
1,1,1,2-Tetrachloroethane	1	<1
1,1,1-Trichloroethane	1	<1
1,1,2,2-Tetrachloroethane	1	<1
1,1,2-Trichloroethane	1	<1
1,1-Dichloroethane	1	<1
1,1-Dichloroethene	1	<1
1,1-Dichloropropene	1	<1
1,2,3-Trichlorobenzene	1	<1
1,2,3-Trichloropropane	1	<1
1,2,4-Trichlorobenzene	1	<1
1,2,4-Trimethylbenzene	1	<1
1,2-Dibromo-3-Chloropropane	1	<1
1,2-Dibromoethane	1	<1
1,2-Dichlorobenzene	1	<1
1,2-Dichloroethane	1	<1
1,2-Dichloropropane	1	<1
1,3,5-Trimethylbenzene	1	<1
1,3-Dichlorobenzene	1	<1
1,3-Dichloropropane	1	<1
1,4-Dichlorobenzene	1	<1
2,2-Dichloropropane	1	<1
2-Chlorotoluene	1	<1
4-Chlorotoluene	1	<1
Benzene	1	<1
Bromobenzene	1	<1

UNITS: ug/L

METHOD: EPA 524.2

'<' Indicates less than detection level.

High detection limit due to high target compound concentration.

Synergic Analytics, Inc.

ANALYTICAL REPORT

ATTN: Thomas Brent
Crane Division N.S.W.C.
Code 09510 Building 3260
Crane, IN 47522-5009

LABORATORY ID# 961238-02
RECEIVED DATE: 4/23/96
ANALYSIS DATE: 4/24/96

CLIENT SAMPLE INFORMATION

Site Name:
Sampling Point: **146-03-04196 / 146-04-04196**
Project# 011 Sample# Sampling Date: 4/19/96

Analysis For
EPA 524.2 (SDWA Volatiles)

COMPOUND	DETECTION LEVEL	RESULT
Bromochloromethane	1	<1
Bromodichloromethane	1	<1
Bromoform	1	<1
Bromomethane	1	<1
Carbon tetrachloride	1	<1
Chlorobenzene	1	<1
Chlorodibromomethane	1	<1
Chloroethane	1	<1
Chloroform	1	<1
Chloromethane	1	<1
Dibromomethane	1	<1
Dichlorodifluoromethane	1	<1
Ethylbenzene	1	<1
Fluorotrichloromethane	1	<1
Hexachlorobutadiene	1	<1
Isopropylbenzene	1	<1
Methylene chloride	1	<1
Naphthalene	1	<1
Sec-Butylbenzene	1	<1
Styrene	1	<1
Tetrachloroethene	1	<1
Toluene	1	<1
Trichloroethene	2	88
Vinyl chloride	1	<1
cis-1,2-Dichloroethene	1	1

UNITS: ug/L

METHOD: EPA 524.2

'<' Indicates less than detection level.

High detection limit due to high target compound concentration.

450 54th St. S.W. Grand Rapids, MI 49548 Phone: (616)538-8700 FAX: (616)538-9055

ANALYTICAL REPORT

ATTN: Thomas Brent
Crane Division N.S.W.C.
Code 09510 Building 3260
Crane, IN 47522-5009

LABORATORY ID# 961238-02
RECEIVED DATE: 4/23/96
ANALYSIS DATE: 4/24/96

CLIENT SAMPLE INFORMATION

Site Name:
Sampling Point: **146-03-04196 / 146-04-04196**
Project# 011 Sample# Sampling Date: 4/19/96

Analysis For
EPA 524.2 (SDWA Volatiles)

COMPOUND	DETECTION LEVEL	RESULT
cis-1,3-Dichloropropene	1	<1
m- And/Or p-Xylene	1	<1
n-Butylbenzene	1	<1
n-Propylbenzene	1	<1
o-Xylene	1	<1
p-Isopropyltoluene	1	<1
tert-Butylbenzene	1	<1
trans-1,2-Dichloroethene	1	<1
trans-1,3-Dichloropropene	1	<1

UNITS: ug/L

METHOD: EPA 524.2

'<' Indicates less than detection level.

High detection limit due to high target compound concentration.

ENVIRONMENTAL PROTECTION SAMPLING RECORD

Department of the Navy
Naval Surface Warfare Center
Crane, IN 47522

SAMPLING SITE	PURPOSE
B-146 WEST SUMP	PUMPING & OVERFLOW DUE TO HEAVY RAIN
SAMPLE DATE: 4/28/96	TIME

SAMPLE NUMBER	SAMPLE NUMBER	SAMPLE NUMBER
146-07-04286 146-08-04286	146-09-04286 146-10-04286	146-11-04286 146-12-04286
~~LOCATION~~ TIME: 1050	~~LOCATION~~ TIME: 1400	~~LOCATION~~ TIME: 1820
OBSERVATIONS: Sampled when full (overflowed 10 min) before pumping to sanitary sewer	OBSERVATIONS: Sampled when water was 5" from the top before pumping to the sanitary sewer	OBSERVATIONS: Sampled when water was 2' from the top. Will overflow after this.
GRAB X COMPOSITE	GRAB X COMPOSITE	GRAB X COMPOSITE
ANALYTICAL PARAMETERS: VOCs	ANALYTICAL PARAMETERS: VOCs	ANALYTICAL PARAMETERS: VOCs

SAMPLER'S SIGNATURE	CODE
Thomas J. Brent Christine D. Freeman	095
DATE SAMPLES SENT: 4/29/96	ANALYTICAL LAB: Code 40

REMARKS

Heavy rains on the 28th caused sump to fill & overflow. Should be fairly diluted.

CHAIN OF CUSTODY

CRANE DIVISION, NAVAL SURFACE WARFARE CENTER
ENVIRONMENTAL PROTECTION DEPT.
NAVSURFWARCENDIV 5090/6 (REV. 5/93)

SAMPLING DATE	SAMPLE I.D.	CONTAINER (PARAMETERS)
4/28/96	146-07-04286	VOCs (TRICHLOROETHENE)
"	146-08-04286	"
"	146-09-04286	"
"	146-10-04286	"
"	146-11-04286	"
"	146-12-04286	"

SAMPLER PREPARER (SIGNATURE)	TRANSFERRED TO (SIGNATURE)	DATE	TIME	ORGANIZATION
J. Brent	Nancy Maegerl	4/28/96		B-2707 Code 40

ENVIRONMENTAL PROTECTION SAMPLING RECORD

Department of the Navy
Naval Surface Warfare Center
Crane, IN 47522

SAMPLING SITE	PURPOSE
B/46 WEST SUMP	OVERFLOW SAMPLE
SAMPLE DATE	**TIME**
4/29/96 → 4/30/96	

SAMPLE NUMBER	SAMPLE NUMBER	SAMPLE NUMBER
146-13-04296 146-14-04296	146-15-04306 146-16-04306	
~~LOCATION~~ TIME	~~LOCATION~~ TIME	LOCATION
1720	0740	
OBSERVATIONS	OBSERVATIONS	OBSERVATIONS
sampled when less than ½ full.	Sump was overflowing and will be pumped	
GRAB X / COMPOSITE	GRAB X / COMPOSITE	GRAB / COMPOSITE
ANALYTICAL PARAMETERS	ANALYTICAL PARAMETERS	ANALYTICAL PARAMETERS
VOCs (TRICHLOROETHENE)	VOCs (TRICHLOROETHENE)	

SAMPLER'S SIGNATURE	CODE
Thomas J. Brent	095
DATE SAMPLES SENT	**ANALYTICAL LAB**
4/30/96	Code 40-2707

REMARKS

Heavy rains continued through the 29th, with run-off impacting the discharge into the sump.

CHAIN OF CUSTODY

CRANE DIVISION, NAVAL SURFACE WARFARE CENTER
ENVIRONMENTAL PROTECTION DEPT.
NAVSURFWARCENDIV 5090/6 (REV. 5/93)

SAMPLING DATE	SAMPLE I.D.	CONTAINER (PARAMETERS)
04/29/96	146-13-04296	VOCs (TRICHLOROETHENE)
04/29/96	146-14-04296	"
04/30/96	146-15-04306	"
04/30/96	146-16-04306	"

SAMPLER PREPARER (SIGNATURE)	TRANSFERRED TO (SIGNATURE)	DATE	TIME	ORGANIZATION
Thomas J. Brent	J. D. Magnuson	30 Apr 96	0840	Code 40

Trichloroethene Results from Code 40

Rec'd. 05/01/96

Sample Number	Results (ug/l)
146-07-04286	65.3
146-08-04286	58.4
146-09-04286	3.1
146-10-04286	4.3
146-11-04286	8.4
146-12-04286	7.6
146-13-04296	44.1
146-14-04296	28.8
146-15-04306	~~28.1~~ 49.3
146-16-04306	45.7

ENVIRONMENTAL PROTECTION SAMPLING RECORD

Department of the Navy
Naval Surface Warfare Center
Crane, IN 47522

SAMPLING SITE	PURPOSE
B146 WEST SUMP	LOOKING FOR CONTAM. CONCENTRATION
SAMPLE DATE	**TIME**
4/30/96	

SAMPLE NUMBER	SAMPLE NUMBER	SAMPLE NUMBER
146-17-04306		
~~LOCATION~~ TZM5 1550	LOCATION	LOCATION
OBSERVATIONS	OBSERVATIONS	OBSERVATIONS
Sump has 3' of water. Only gained three feet in 6½ hours, ∴ may be concentrating TRICH.		
GRAB X COMPOSITE	GRAB COMPOSITE	GRAB COMPOSITE
ANALYTICAL PARAMETERS	ANALYTICAL PARAMETERS	ANALYTICAL PARAMETERS
VOCs (TRICHLOROETHENE).		

SAMPLER'S SIGNATURE	CODE
Thomas J. Brent	095
DATE SAMPLES SENT	**ANALYTICAL LAB**
4/30/96	ATEC

REMARKS

2 bottles sent as one sample

NSWC, CRANE
CHAIN OF CUSTODY FORM
GENERAL

Control Number

Client:
NAVSURFWARCENDIV CRANE
Address
COMMANDER
CODE 09513 BLDG 3260
NAVSURFWARCENDIV
300 HIGHWAY 361, CRANE IN 47522

Report to: Jim Market
Phone No. (812)-854-6161
Fax No. (812)-854-4177

Parameters	Code	Preservative Used	Hold Time	Name of Collector	Time of Collection	Sample ID	Plastic or Glass	No. Shipped	Rush 0008AA	Rush 0008AB
VOCs (TRICHLOROETHENE)	0007BU	ICED 4°C	14 days	T. BRENT C. FREEMAN	1550	146-17-04306	GLASS-AMBER	1	✓	

Relinquished by:	Date/Time	Received by:	Relinquished by:	Date/Time	Received by:
Thomas J. Brent	5/1/96 0730	[illegible]			
Relinquished by:	Date/Time	Received by:	Relinquished by:	Date/Time	Received by:

ATEC ASSOCIATES, INC.

5150 E. 65th Street
Indianapolis, IN 46220

FAX COVER SHEET

Telephone Number: (317) 849-4990
Fax Number: (317) 842-7932

To: Phil Keith or Tom Brent Fax: 812 854-~~6157~~ 4177

Company: USWC, Crane

From: Mary Moxwell Extension: 1845

Date: 5-2-96

Number of Pages (including cover sheet) 5

Comments: Please Call if you have questions.

CONFIDENTIALITY NOTE:
The documents accompanying this fax transmission may contain information from ATEC Associates, Inc. which is confidential and privileged. The information is intended for the use of the individual or entity to whom it is directed. If you are not the intended recipient, be aware that any disclosure, copying, distribution or use of the contents of the faxed information is prohibited. If you have received this fax in error, please notify us by telephone immediately so that we can arrange for the retrieval of the transmitted documents.

PLEASE NOTE THAT ALL VERBAL AND FAXED RESULTS ARE SUBJECT TO CHANGE DURING THE DATA REVIEW PROCESS.

CONFIDENTIAL

Douglass Environmental Services
8649 Bash Street
Indianapolis IN 46256

Attn : Paul Douglass

Lab Proj #: 96052329
Date : 05/02/1996

Cust Proj #: 2108-9600 NSWC,Crane

Date Received : 05/01/1996
Date Completed: 05/02/1996

REPORT OF ANALYSIS

ATEC Sample Number	Client Sample Description	ATEC Sample Number	Client Sample Description
96-008488	146-17-04306	96-008637	Method Blank

This report shall not be reproduced except in full, without approval of the Laboratory.

Mary McGill-Maxwell

Certified By:
Mary R. McGill-Maxwell

Date of Report: 05/02/96
Project Number: 96052329
Lab ID: 96-0008488
Date Collected: 04/30/96 15:50
Collected By: Client
Date Received: 05/01/96 10:45
C of C Number:
Temperature: Received on Ice

ttention: Paul Douglass
Douglass Environmental Services
8649 Bash Street
Indianapolis IN 46256

ample Desc: 146-17-04306

	Result	Unit	Det. Limit	Procedure	Test Date
RGANIC					
GCMS VOLATILES					
Trichloroethene	89	ug/L	5	sw 8240	05/01/96

Date of Report: 05/02/96
Project Number: 96052329
Lab ID: 96-0008637
Date Collected: 05/01/96 09:50
Collected By: Client
Date Received: 05/01/96 09:45
C of C Number:
Temperature: Received on Ice

Attention: Paul Douglass
Douglass Environmental Services
8649 Bash Street
Indianapolis IN 46256

Sample Desc: Method Blank

	Result	Unit	Det. Limit	Procedure	Test Date
ORGANIC					
GCMS VOLATILES					
Trichloroethene	<5	ug/L	5	sw 8240	05/01/96

NSWC CRANE
CHAIN OF CUSTODY FORM
GENERAL

96052327

Control Number: A-C

Client:
NAVSURFWARCENDIV CRANE
Address
COMMANDER
CODE 09513 BLDG 3260
NAVSURFWARCENDIV
300 HIGHWAY 361, CRANE IN 47522

Report Results to: Tom Brent
Fax: 812-854-~~6157~~ 4177
Telephone: 812-854-6161

Report to: Jim Market
Phone No. (812)-854-6161
Fax No. (812)-854-4177

Parameters	Code	Preservative Used	Hold Time	Name of Collector	Time of Collection	Sample ID	Plastic or Glass	No. Shipped	Rush 0008AA	Rush 0008AB
VOCs (TRICHLOROETHENE)	0007BU	ICED 4°C	14 days	T. BRENT C. FREEMAN	1550	146-17-04306	GLASS-AMBER	1	✓	

Relinquished by:	Date/Time	Received by:	Relinquished by:	Date/Time	Received by:
Thomas J. Brent	5/1/96 0730	[signature]	[signature]	5/1	
Relinquished by:	Date/Time	Received by: 5-1-96 10:45A	Relinquished by:	Date/Time	Received by:

ENVIRONMENTAL PROTECTION SAMPLING RECORD

Department of the Navy
Naval Surface Warfare Center
Crane, IN 47522

SAMPLING SITE B-146 West Sump	PURPOSE Influent + effluent Determine Contam. concentration
SAMPLE DATE 5/2/96	TIME 1600

SAMPLE NUMBER 146-19-05026	SAMPLE NUMBER 146-20-05026	SAMPLE NUMBER
LOCATION	LOCATION	LOCATION
OBSERVATIONS First run of stripper influent	OBSERVATIONS First run of stripper effluent	OBSERVATIONS
GRAB X COMPOSITE	GRAB X COMPOSITE	GRAB COMPOSITE
ANALYTICAL PARAMETERS VOCs (trichloroethene)	ANALYTICAL PARAMETERS VOCs (trichloroethene)	ANALYTICAL PARAMETERS

SAMPLER'S SIGNATURE Thomas J. Brent	CODE 095
DATE SAMPLES SENT 5/3/96	ANALYTICAL LAB Code 40 B-2707

REMARKS

ENVIRONMENTAL PROTECTION SAMPLING RECORD

Department of the Navy
Naval Surface Warfare Center
Crane, IN 47522

SAMPLING SITE	PURPOSE
B-146 West Sump	Determine Contam. concentration
SAMPLE DATE	**TIME**
5/3/96	

SAMPLE NUMBER	SAMPLE NUMBER	SAMPLE NUMBER
146 - 21 - 05036		
~~LOCATION~~	LOCATION	LOCATION
Time 0730		
OBSERVATIONS	OBSERVATIONS	OBSERVATIONS
Sump overflowed. Sample taken from the pit. Stripper not operating.		
GRAB X / COMPOSITE	GRAB / COMPOSITE	GRAB / COMPOSITE
ANALYTICAL PARAMETERS	ANALYTICAL PARAMETERS	ANALYTICAL PARAMETERS
VOCs (trichloroethene)		

SAMPLER'S SIGNATURE	CODE
Thomas J. Brent	095
DATE SAMPLES SENT	**ANALYTICAL LAB**
5/3/96	Code 40 2707

REMARKS

Result phone in 5/6/96 @ 14 ppb

CHAIN OF CUSTODY

CRANE DIVISION, NAVAL SURFACE WARFARE CENTER
ENVIRONMENTAL PROTECTION DEPT.
NAVSURFWARCENDIV 5090/6 (REV. 5/93)

SAMPLING DATE	SAMPLE I.D.	CONTAINER (PARAMETERS)
5/2/96	146-19-05026	VOCs (TRICHLOROETHYLENE)
5/2/96	146-20-05026	VOCs "
5/3/96	146-21-05036	VOCs "

SAMPLER PREPARER (SIGNATURE)	TRANSFERRED TO (SIGNATURE)	DATE	TIME	ORGANIZATION
Thomas J. Brent	Louis Schwark	5/3/96	1242	CODE40

Tom –

Trichloroethylene Results

146-21-05036	13.8 ppb
146-19-05026	485 ppb
146-20-05026	32.9 ppb

Phil

32.9 is 93.2% of 485

ENVIRONMENTAL PROTECTION SAMPLING RECORD

Department of the Navy
Naval Surface Warfare Center
Crane, IN 47522

SAMPLING SITE	PURPOSE
B146 [redacted]	
SAMPLE DATE	**TIME**
05/09/96	146-22-05096 1250 146-23 & 24-05096 1500

SAMPLE NUMBER	SAMPLE NUMBER	SAMPLE NUMBER
146-22-05096	146-23 -05096	146-24 -05096
LOCATION	LOCATION	LOCATION
INSIDE 146 DOCK ON	WEST SUMP	WEST SUMP
NORTH END OF BUILDING	AIR STRIPPER INFLUENT	AIR STRIPPER EFFLUENT
IN STEAM LINE PIT		
OBSERVATIONS	OBSERVATIONS	OBSERVATIONS
WATER FLOWING IN AT BASE	Rain yesterday @ 1500 hrs.	
OF WALL OPPOSITE BLDG. (N).	Sump pumped down. Had	
FLOWS TO A FLOOR DRAIN	to operate pump manually.	
GRAB X COMPOSITE	GRAB X COMPOSITE	GRAB X COMPOSITE
ANALYTICAL PARAMETERS	ANALYTICAL PARAMETERS	ANALYTICAL PARAMETERS
VOCs	VOCs	VOCs

SAMPLER'S SIGNATURE	CODE
	095

DATE SAMPLES SENT	ANALYTICAL LAB
5/10/96	146-22-05096 → HERITAGE 146-23 & 24-05096 → Code 40, B-2707

REMARKS

Results for 23 & 24 received on 5/13/96

146-23-05096 123 ppb TRICHLOROETHYLENE
146-24-05096 0.7 ppb TRICHLOROETHYLENE ("barely detectable")

CHAIN OF CUSTODY

CRANE DIVISION, NAVAL SURFACE WARFARE CENTER
ENVIRONMENTAL PROTECTION DEPT.
NAVSURFWARCENDIV 5090/6 (REV. 5/93)

SAMPLING DATE	SAMPLE I.D.	CONTAINER (PARAMETERS)
5/9/96	146-23-05096	VOCs (TRICHLOROETHENE)
5/9/96	146-24-05096	VOCs (TRICHLOROETHENE)

SAMPLER PREPARER (SIGNATURE)	TRANSFERRED TO (SIGNATURE)	DATE	TIME	ORGANIZATION
Christine Freeman for J. Brent	Michael P Molly	5-10-96	1010	

CERTIFICATE OF ANALYSIS

Service Location	Received	Project	Lab ID
HERITAGE ENVIRONMENTAL SERVICES, INC. COMMERCIAL LABORATORY OPERATIONS 7901 W. MORRIS ST. INDIANAPOLIS, IN 46231 (317)243-8305	10-MAY-96		A374700
	Complete	PO Number	
	14-MAY-96	CRANE NSCVC	
	Printed	Sampled	
	15-MAY-96	09-MAY-96 12:50	

Report To	Bill To
WADE ROARK COMARCO, INC. R.R. 6, BOX 28 BLOOMFIELD, IN 47424	KENNETH DETWILER COMARCO, INC. HIGHWAY 213 SOUTH P.O. BOX 408 BLOOMFIELD, IN 47424

Sample Description

CLIENT ID: 146-22-05096
DESCRIPTION: WATER
PROJECT NAME: B146 WEST SUMP

HALOGENATED VOLATILE ORGANICS BY GC:ELCD SW846-8010B

Analyst: S. STRUEWING Analysis Date: 13-MAY-96 07:59 Instrument: GC/PID ELCD Test: 0459.2.0

Parameter	Result	Det. Limit	Units
TRICHLOROETHENE	11	1.0	ug/L
...			
SURROGATE RECOVERY			

CHLOROFLUOROBENZENE	100.5		% Rec
FLUOROBENZENE	96.8		% Rec

Sample Comments

Sample chain of custody number 56183.

This Certificate shall not be reproduced, except in full, without the written approval of the lab.

Approved : Brenda Lewis

CERTIFICATE OF ANALYSIS

Service Location	Received	Project	Lab ID
HERITAGE ENVIRONMENTAL SERVICES, INC. COMMERCIAL LABORATORY OPERATIONS 7901 W. MORRIS ST. INDIANAPOLIS, IN 46231 (317)243-8305	10-MAY-96		A3747(
	Complete	PO Number	
	14-MAY-96	CRANE NSCVC	
	Printed	Sampled	
	15-MAY-96		

Report To	Bill To
WADE ROARK COMARCO, INC. R.R. 6, BOX 28 BLOOMFIELD, IN 47424	KENNETH DETWILER COMARCO, INC. HIGHWAY 213 SOUTH P.O. BOX 408 BLOOMFIELD, IN 47424

Sample Description

CLIENT ID: TRIP BLANK

HALOGENATED VOLATILE ORGANICS BY GC:ELCD SW846-8010B

Analyst: S. STRUEWING Analysis Date: 13-MAY-96 00:21 Instrument: GC/PID ELCD Test: 0459.2.0

Parameter	Result	Det. Limit	Units
TRICHLOROETHENE	BDL	1.0	ug/L
...			
SURROGATE RECOVERY			

CHLOROFLUOROBENZENE	92.9		% Rec
FLUOROBENZENE	93.1		% Rec

Sample Comments

BDL Below Detection Limit

Sample chain of custody number 56183.

This Certificate shall not be reproduced, except in full, without the written approval of the lab.

Approved : Brenda Lousch

ENVIRONMENTAL PROTECTION SAMPLING RECORD

Department of the Navy
Naval Surface Warfare Center
Crane, IN 47522

SAMPLING SITE	PURPOSE
B146 NORTH BAY	DETERMINE LOCATION OF TRICHLORO.
SAMPLE DATE	**TIME**
05/29/96	0930 – 1000

SAMPLE NUMBER	SAMPLE NUMBER	SAMPLE NUMBER
146 – 1A – 052996	146 – 1B – 052996	146 – 2A – 052996
LOCATION	LOCATION	LOCATION
Beneath floor. See attached drawing	Beneath floor. See attached drawing.	Beneath floor. See attached drawing.
OBSERVATIONS	OBSERVATIONS	OBSERVATIONS
≈0-9" from top of dirt. Began sampling ≈ 3.5' below top of floor	≈ 9-18" from top of dirt. Began sampling ≈ 3.5' below top of floor	≈ 0-6" from top of dirt. Began sampling ≈ 4' from top of floor
GRAB X COMPOSITE	GRAB X COMPOSITE	GRAB X COMPOSITE
ANALYTICAL PARAMETERS	ANALYTICAL PARAMETERS	ANALYTICAL PARAMETERS
VOCs + SVOCs	VOCs + SVOCs	VOCs + SVOCs
EXPLOSIVES		

SAMPLER'S SIGNATURE	CODE
Thomas J. Brent	0510
DATE SAMPLES SENT	**ANALYTICAL LAB**
5/30/96	SYNERGICS – VOCs + SVOCs; 2707 – EXPLOSIVES

REMARKS

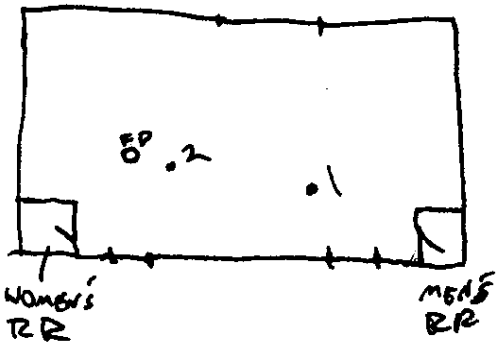

ENVIRONMENTAL PROTECTION SAMPLING RECORD

Department of the Navy
Naval Surface Warfare Center
Crane, IN 47522

SAMPLING SITE	PURPOSE
B146 NORTH BAY	LOCATE TRICHLOROETHENE
SAMPLE DATE	**TIME**
05/29/96	0930-1000

SAMPLE NUMBER	SAMPLE NUMBER	SAMPLE NUMBER
146-2B-052996	146-3A-052996	
LOCATION	LOCATION	LOCATION
Beneath floor. See attached drawing	Beneath floor - see attached drawing	
OBSERVATIONS	OBSERVATIONS	OBSERVATIONS
≈ 6-12" from top of dirt. Began sampling ≈ 4' from top of floor.	Gravel & Concrete dust from top of hole 1	
GRAB X COMPOSITE	GRAB X COMPOSITE	GRAB COMPOSITE
ANALYTICAL PARAMETERS	ANALYTICAL PARAMETERS	ANALYTICAL PARAMETERS
VOCs + SVOCs	VOCs + SVOCs	

SAMPLER'S SIGNATURE	CODE
Thomas J. Brant	09510
DATE SAMPLES SENT	**ANALYTICAL LAB**
5/30/96	SYNERGICS

REMARKS

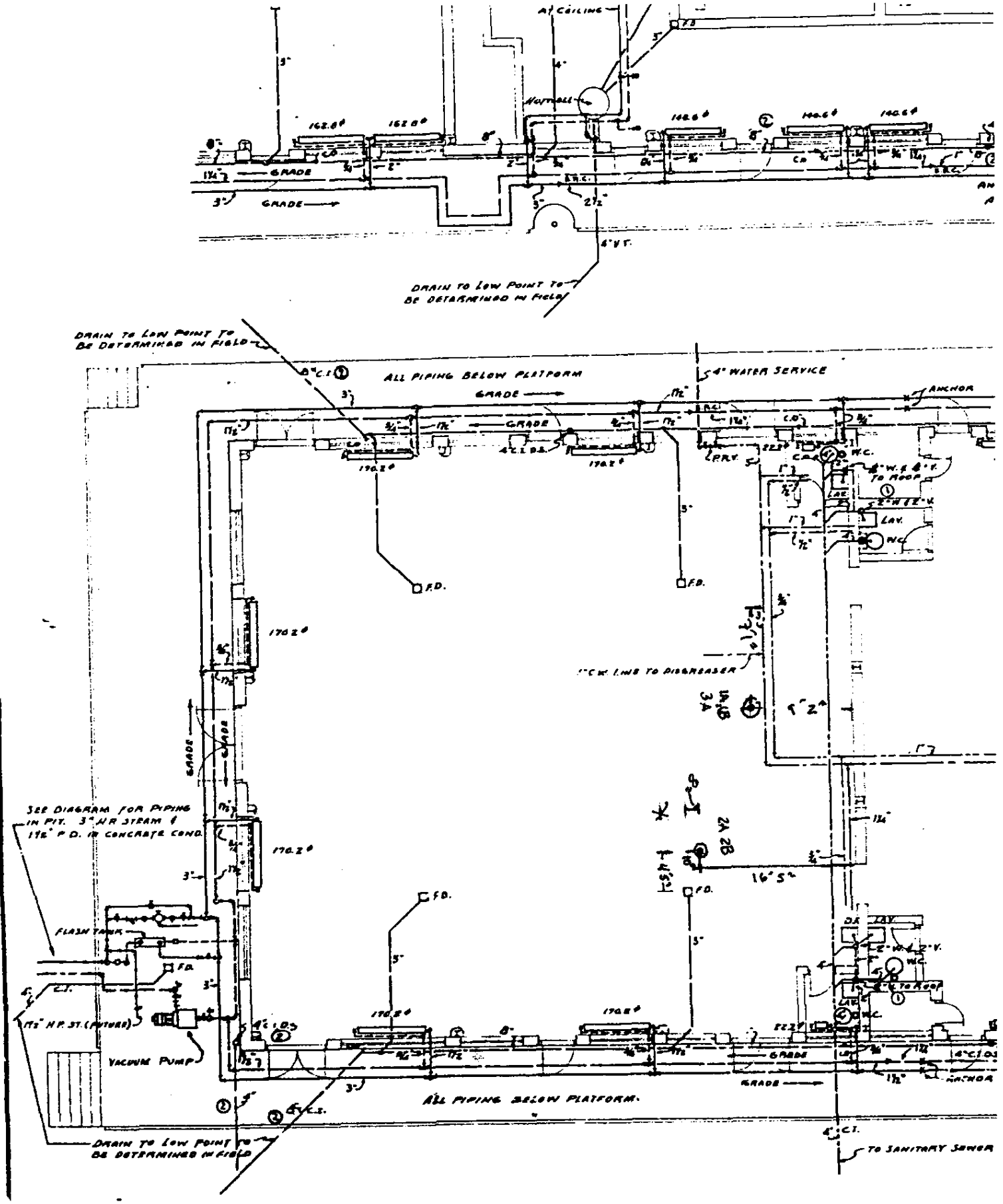

FIRST FLOOR PLAN

SCALE - 3/8" = 1'-0"

NSWC, CRANE
CHAIN OF CUSTODY FORM
Solid Waste

Con Number
018

Client:
NAVSURFWARCENDIV CRANE
Address
COMMANDER
CODE 09513 BLDG 3260
NAVSURFWARCENDIV
300 HIGHWAY 361, CRANE IN 47522

Report to: Tom Brent
Phone No. (812)-854-6160
Fax No. (812)-854-4177

Parameters	Code	Preservative Used	Hold Time	Name of Collector	Time of Collection	Sample ID	Plastic or Glass	No. Shipped	Rush 0008AA	Rush 0008AB
VOCs + SVOCs	0003AG	4° C		Tom Brent		146-1A-052996	G	1	X	
VOCs + SVOCs	0003AG	4° C		Tom Brent		146-1B-052996	G	1	X	
VOCs + SVOCs	0003AG	4° C		Tom Brent		146-2A-052996	G	1	X	
VOCs + SVOCs	0003AG	4°C		TOM BRENT		146-2B-052996	G	1	X	
VOCs + SVOCs	0003AG	4°C		TOM BRENT		146-3A-052996	G	1	X	

Relinquished by:	Date/Time	Received by:	Relinquished by:	Date/Time	Received by:
Thomas J. Brent	5/29/96 1315	Jim Andrews 5/29/96			
Relinquished by:	Date/Time	Received by:	Relinquished by:	Date/Time	Received by:

Synergic Analytics, Inc.

ANALYTICAL REPORT

ATTN: Mr. Jim Market
CRANE NAVAL CODE 09513 BLDG 3260
300 Highway 361
Crane, IN 47522

LABORATORY ID# 961347-02
RECEIVED DATE: 5/31/96
ANALYSIS DATE: 6/06/96

CLIENT SAMPLE INFORMATION

Site Name:
Sampling Point: 146-1A-052996
Project# 018 Sample# Sampling Date: 5/29/96

Analysis For
TCLP Leachate Analysis For Semi-Volatiles

COMPOUND	DETECTION LEVEL	RESULT
1,4-Dichlorobenzene	0.1	<0.1
2,4,5-Trichlorophenol	0.1	<0.1
2,4,6-Trichlorophenol	0.1	<0.1
2,4-Dinitrotoluene	0.05	<0.05
Hexachlorobenzene	0.05	<0.05
Hexachlorobutadiene	0.1	<0.1
Hexachloroethane	0.1	<0.1
Nitrobenzene	0.1	<0.1
Pentachlorophenol	0.1	<0.1
Pyridine	0.1	<0.1
m- And/Or p-Cresol	0.1	<0.1
o-Cresol	0.1	<0.1

UNITS: ug/L of Leachate

METHOD: EPA-SW846, 8270 (GC/MS) and 1311

'<' Indicates less than detection level.

450 54th St. S.W. Grand Rapids, MI 49548 Phone: (616)538-8700 FAX: (616)538-9055

Synergic Analytics, Inc.

ANALYTICAL REPORT

ATTN: Mr. Jim Market
CRANE NAVAL CODE 09513 BLDG 3260
300 Highway 361
Crane, IN 47522

LABORATORY ID# 961347-02
RECEIVED DATE: 5/31/96
ANALYSIS DATE: 6/05/96

CLIENT SAMPLE INFORMATION

Site Name:
Sampling Point: 146-1A-052996
Project# 018 Sample# Sampling Date: 5/29/96

Analysis For
TCLP Leachate Analysis for Volatiles

COMPOUND	DETECTION LEVEL	RESULT
1,1-Dichloroethene	0.05	<0.05
1,2-Dichloroethane	0.05	<0.05
Benzene	0.05	<0.05
Carbon tetrachloride	0.05	<0.05
Chlorobenzene	0.05	<0.05
Chloroform	0.05	<0.05
Methylethyl ketone	0.05	<0.05
Tetrachloroethylene	0.05	<0.05
Trichloroethene	0.05	<0.05
Vinyl chloride	0.05	<0.05

UNITS: ug/L of leachate

METHOD: EPA-SW846, 8260/5030 (GC/MS) and 1311

'<' Indicates less than detection level.

Synergic Analytics, Inc

ANALYTICAL REPORT

ATTN: Mr. Jim Market
CRANE NAVAL CODE 09513 BLDG 3260
300 Highway 361
Crane, IN 47522

LABORATORY ID# 961347-03
RECEIVED DATE: 5/31/96
ANALYSIS DATE: 6/06/96

CLIENT SAMPLE INFORMATION

Site Name:
Sampling Point: 146-1B-052996
Project# 018 Sample# Sampling Date: 5/29/96

Analysis For
TCLP Leachate Analysis For Semi-Volatiles

COMPOUND	DETECTION LEVEL	RESULT
1,4-Dichlorobenzene	0.1	<0.1
2,4,5-Trichlorophenol	0.1	<0.1
2,4,6-Trichlorophenol	0.1	<0.1
2,4-Dinitrotoluene	0.05	<0.05
Hexachlorobenzene	0.05	<0.05
Hexachlorobutadiene	0.1	<0.1
Hexachloroethane	0.1	<0.1
Nitrobenzene	0.1	<0.1
Pentachlorophenol	0.1	<0.1
Pyridine	0.1	<0.1
m- And/Or p-Cresol	0.1	<0.1
o-Cresol	0.1	<0.1

UNITS: ug/L of Leachate

METHOD: EPA-SW846, 8270 (GC/MS) and 1311

'<' Indicates less than detection level.

450 54th St. S.W. Grand Rapids, MI 49548 Phone: (616)538-8700 FAX: (616)538-9055

Synergic Analytics, Inc

ANALYTICAL REPORT

ATTN: Mr. Jim Market
CRANE NAVAL CODE 09513 BLDG 3260
300 Highway 361
Crane, IN 47522

LABORATORY ID# 961347-03
RECEIVED DATE: 5/31/96
ANALYSIS DATE: 6/05/96

CLIENT SAMPLE INFORMATION

Site Name:
Sampling Point: 146-1B-052996
Project# 018 Sample# Sampling Date: 5/29/96

Analysis For
TCLP Leachate Analysis for Volatiles

COMPOUND	DETECTION LEVEL	RESULT
1,1-Dichloroethene	0.05	<0.05
1,2-Dichloroethane	0.05	<0.05
Benzene	0.05	<0.05
Carbon tetrachloride	0.05	<0.05
Chlorobenzene	0.05	<0.05
Chloroform	0.05	<0.05
Methylethyl ketone	0.05	<0.05
Tetrachloroethylene	0.05	<0.05
Trichloroethene	0.05	<0.05
Vinyl chloride	0.05	<0.05

UNITS: ug/L of leachate

METHOD: EPA-SW846, 8260/5030 (GC/MS) and 1311

'<' Indicates less than detection level.

Synergic Analytics, Inc

ANALYTICAL REPORT

ATTN: Mr. Jim Market
CRANE NAVAL CODE 09513 BLDG 3260
300 Highway 361
Crane, IN 47522

LABORATORY ID# 961347-04
RECEIVED DATE: 5/31/96
ANALYSIS DATE: 6/06/96

CLIENT SAMPLE INFORMATION

Site Name:
Sampling Point: 146-2A-052996
Project# 018 Sample# Sampling Date: 5/29/96

Analysis For
TCLP Leachate Analysis For Semi-Volatiles

COMPOUND	DETECTION LEVEL	RESULT
1,4-Dichlorobenzene	0.1	<0.1
2,4,5-Trichlorophenol	0.1	<0.1
2,4,6-Trichlorophenol	0.1	<0.1
2,4-Dinitrotoluene	0.05	<0.05
Hexachlorobenzene	0.05	<0.05
Hexachlorobutadiene	0.1	<0.1
Hexachloroethane	0.1	<0.1
Nitrobenzene	0.1	<0.1
Pentachlorophenol	0.1	<0.1
Pyridine	0.1	<0.1
m- And/Or p-Cresol	0.1	<0.1
o-Cresol	0.1	<0.1

UNITS: ug/L of Leachate

METHOD: EPA-SW846, 8270 (GC/MS) and 1311

'<' Indicates less than detection level.

450 54th St. S.W. Grand Rapids, MI 49548 Phone: (616)538-8700 FAX: (616)538-9055

Synergic Analytics, Inc.

ANALYTICAL REPORT

ATTN: Mr. Jim Market
CRANE NAVAL CODE 09513 BLDG 3260
300 Highway 361
Crane, IN 47522

LABORATORY ID# 961347-04
RECEIVED DATE: 5/31/96
ANALYSIS DATE: 6/05/96

CLIENT SAMPLE INFORMATION

Site Name:
Sampling Point: 146-2A-052996
Project# 018 Sample# Sampling Date: 5/29/96

Analysis For
TCLP Leachate Analysis for Volatiles

COMPOUND	DETECTION LEVEL	RESULT
1,1-Dichloroethene	0.05	<0.05
1,2-Dichloroethane	0.05	<0.05
Benzene	0.05	<0.05
Carbon tetrachloride	0.05	<0.05
Chlorobenzene	0.05	<0.05
Chloroform	0.05	<0.05
Methylethyl ketone	0.05	<0.05
Tetrachloroethylene	0.05	<0.05
Trichloroethene	0.05	<0.05
Vinyl chloride	0.05	<0.05

UNITS: ug/L of leachate

METHOD: EPA-SW846, 8260/5030 (GC/MS) and 1311

'<' Indicates less than detection level.

Synergic Analytics, Inc

ANALYTICAL REPORT

ATTN: Mr. Jim Market
CRANE NAVAL CODE 09513 BLDG 3260
300 Highway 361
Crane, IN 47522

LABORATORY ID# 961347-05
RECEIVED DATE: 5/31/96
ANALYSIS DATE: 6/06/96

CLIENT SAMPLE INFORMATION

Site Name:
Sampling Point: 146-2B-052996
Project# 018 Sample# Sampling Date: 5/29/96

Analysis For
TCLP Leachate Analysis For Semi-Volatiles

COMPOUND	DETECTION LEVEL	RESULT
1,4-Dichlorobenzene	0.1	<0.1
2,4,5-Trichlorophenol	0.1	<0.1
2,4,6-Trichlorophenol	0.1	<0.1
2,4-Dinitrotoluene	0.05	<0.05
Hexachlorobenzene	0.05	<0.05
Hexachlorobutadiene	0.1	<0.1
Hexachloroethane	0.1	<0.1
Nitrobenzene	0.1	<0.1
Pentachlorophenol	0.1	<0.1
Pyridine	0.1	<0.1
m- And/Or p-Cresol	0.1	<0.1
o-Cresol	0.1	<0.1

UNITS: ug/L of Leachate

METHOD: EPA-SW846, 8270 (GC/MS) and 1311

'<' Indicates less than detection level.

450 54th St. S.W. Grand Rapids, MI 49548 Phone: (616)538-8700 FAX: (616)538-9055

Synergic Analytics, Inc

ANALYTICAL REPORT

ATTN: Mr. Jim Market
CRANE NAVAL CODE 09513 BLDG 3260
300 Highway 361
Crane, IN 47522

LABORATORY ID# 961347-05
RECEIVED DATE: 5/31/96
ANALYSIS DATE: 6/05/96

CLIENT SAMPLE INFORMATION

Site Name:
Sampling Point: 146-2B-052996
Project# 018 Sample# Sampling Date: 5/29/96

Analysis For
TCLP Leachate Analysis for Volatiles

COMPOUND	DETECTION LEVEL	RESULT
1,1-Dichloroethene	0.05	<0.05
1,2-Dichloroethane	0.05	<0.05
Benzene	0.05	<0.05
Carbon tetrachloride	0.05	<0.05
Chlorobenzene	0.05	<0.05
Chloroform	0.05	<0.05
Methylethyl ketone	0.05	<0.05
Tetrachloroethylene	0.05	<0.05
Trichloroethene	0.05	<0.05
Vinyl chloride	0.05	<0.05

UNITS: ug/L of leachate

METHOD: EPA-SW846, 8260/5030 (GC/MS) and 1311

'<' Indicates less than detection level.

Synergic Analytics, Inc

ANALYTICAL REPORT

ATTN: Mr. Jim Market
CRANE NAVAL CODE 09513 BLDG 3260
300 Highway 361
Crane, IN 47522

LABORATORY ID# 961347-06
RECEIVED DATE: 5/31/96
ANALYSIS DATE: 6/06/96

CLIENT SAMPLE INFORMATION

Site Name:
Sampling Point: 146-3A-052996
Project# 018 Sample# Sampling Date: 5/29/96

Analysis For
TCLP Leachate Analysis For Semi-Volatiles

COMPOUND	DETECTION LEVEL	RESULT
1,4-Dichlorobenzene	0.1	<0.1
2,4,5-Trichlorophenol	0.1	<0.1
2,4,6-Trichlorophenol	0.1	<0.1
2,4-Dinitrotoluene	0.05	<0.05
Hexachlorobenzene	0.05	<0.05
Hexachlorobutadiene	0.1	<0.1
Hexachloroethane	0.1	<0.1
Nitrobenzene	0.1	<0.1
Pentachlorophenol	0.1	<0.1
Pyridine	0.1	<0.1
m- And/Or p-Cresol	0.1	<0.1
o-Cresol	0.1	<0.1

UNITS: ug/L of Leachate

METHOD: EPA-SW846, 8270 (GC/MS) and 1311

'<' Indicates less than detection level.

450 54th St. S.W. Grand Rapids, MI 49548 Phone: (616)538-8700 FAX: (616)538-9055

Synergic Analytics, Inc

ANALYTICAL REPORT

ATTN: Mr. Jim Market
CRANE NAVAL CODE 09513 BLDG 3260
300 Highway 361
Crane, IN 47522

LABORATORY ID# 961347-06
RECEIVED DATE: 5/31/96
ANALYSIS DATE: 6/05/96

CLIENT SAMPLE INFORMATION

Site Name:
Sampling Point: 146-3A-052996
Project# 018 Sample# Sampling Date: 5/29/96

Analysis For
TCLP Leachate Analysis for Volatiles

COMPOUND	DETECTION LEVEL	RESULT
1,1-Dichloroethene	0.05	<0.05
1,2-Dichloroethane	0.05	<0.05
Benzene	0.05	<0.05
Carbon tetrachloride	0.05	<0.05
Chlorobenzene	0.05	<0.05
Chloroform	0.05	<0.05
Methylethyl ketone	0.05	<0.05
Tetrachloroethylene	0.05	<0.05
Trichloroethene	0.05	<0.05
Vinyl chloride	0.05	<0.05

UNITS: ug/L of leachate

METHOD: EPA-SW846, 8260/5030 (GC/MS) and 1311

'<' Indicates less than detection level.
Matrix Spike analysis was performed.

NSW CRANE
CHAIN OF CUSTODY FORM
Solid Waste

Conti mber
018

Client:
NAVSURFWARCENDIV CRANE
Address
COMMANDER
CODE 09513 BLDG 3260
NAVSURFWARCENDIV
300 HIGHWAY 361, CRANE IN 47522

Report to: Tom Brent
Phone No. (812)-854-6160
Fax No. (812)-854-4177

	Parameters	Code	Preservative Used	Hold Time	Name of Collector	Time of Collection	Sample ID	Plastic or Glass	No. Shipped	Rush 0008AA	Rush 0008AB
-02	VOCs + SVOCs	0003AG	4° C		Tom Brent		146-1A-052996	G	1	X	
-03	VOCs + SVOCs	0003AG	4° C		Tom Brent		146-1B-052996	G	1	X	
-04	VOCs + SVOCs	0003AG	4° C		Tom Brent		146-2A-052996	G	1	X	
-05	VOCs + SVOCs	0003AG	4°C		Tom Brent		146-2B-052996	G	1	X	
-06	VOCs + SVOCs	0003AG	4°C		Tom Brent		146-3A-052996	G	1	X	

Relinquished by:	Date/Time	Received by:	Relinquished by:	Date/Time	Received by:
Thomas J. Brent	5/29/96 1315	Jim Andrews 5/29/96			
Fed. Ex	5/31/96	[illegible]			

JUN-07-96 FRI 03:33 PM SYNERGIC ANALYTICS

APPENDIX E

MANIFESTS AND DISPOSAL INFORMATION

MANIFESTS AND DISPOSAL INFORMATION

PCB-Waste Characterization Report . . . . . 4 pages
Hazardous Waste Manifest MI 4420142 . . . . . 5 pages
Hazardous Waste Manifest MI 4420143 . . . . . 5 pages
Wayne Disposal Facility Permit . . . . . 7 pages
Generator Approval Notification . . . . . 2 pages

WASTE CHARACTERIZATION REPORT

☒ New Waste? ☐ Reapproval? *Previous Approval No.* _____ T# _____

Section A - Treatment and Disposal

(please check one)

☐ Michigan Disposal Waste Treatment Plant
(Waste Stabilization and Treatment)
49350 N. I-94 Service Drive
Belleville, MI 48111
Customer Satisfaction: (800) 592-5489

☒ Wayne Disposal, Inc. – Subtitle C Landfill
(Secure Hazardous Waste Landfill)
49350 N. I-94 Service Drive
Belleville, MI 48111
Customer Satisfaction: (800) 592-5489

☐ Michigan Recovery Systems, Inc.
(Waste Solvent Recovery, Fuel Blending)
36345 Van Born Road
Romulus, MI 48174
Customer Satisfaction: (800) 521-0998

Are transportation, site or special services needed?

____ Yes X No

If yes, please explain _____

Section B - Customer Information

SIC # N/A

X Generator US EPA ID # IN5170023498

Generator NAVAL SURFACE WARFARE CENTER

Facility Address _____

City Crane State IN Zip 47522

Mailing Address (if different) P.O. Box 310

City Crane Village State IN Zip 47522

X Generator Contact THOMAS J. BRENT

X Title ENVIRONMENTAL PROTECTION SPECIALIST

one (812) 854-6160 X Fax (812) 854-4177

EQ Customer No. 484

Invoicing Company AMERICAN WASTE MGMT. SERV. INC.

Address One American Way

City Warren State OH Zip 44484

Country USA

Invoicing Contact Kim Snyder

Phone 330 856 8808 Fax 8482

Technical Contact Jim Smith

Phone 330 856 8863 Fax 8480

Purchasing Contact N/A

Is a Purchase Order or Release required for EQ to receive payment on this waste stream? ____ Yes X No

If yes, please list P.O. and/or Release No: _____

Is this waste stream Surcharge Exempt? ____ Yes X No

If yes, Surcharge Exemption Form must be submitted with this Waste Characterization Report and with every waste shipment

Section C - Shipping and Handling Information

1) Is this waste Reactive, Shock Sensitive, Pyrophoric, Explosive, Infectious or Radioactive? ____ Yes X No

If yes, please explain and/or call 1-800-592-5489 for assistance _____

2) Is this waste an Oxidizer? ____ Yes X No

3) Shipping mode: ☐ Bulk Solid (Yd^3 < 2000 lbs/yd^3) ☒ Bulk Solid (Ton >2000 lbs/yd^3) ☐ Bulk Liquids (gal)

☐ Cubic Yard Boxes ☐ Drums ☐ Other (palletized, 5 gallon pails, etc.) _____ (please explain)

4) Shipping volume per year 30 tons One time only volume _____

5) DOT shipping name RQ, Polychlorinated Biphenyl Mixture,

Hazard Class 9, III (UN/NA Number 2315

Section D - Physical Characteristics

1) Color (describe): Grey/Black Odor (describe): None Free Liquids (%): 0 Solids (%): 100

2) pH Range: ☐ <2 ☐ 2 - 4.9 ☒ 5 - 9.9 ☐ 10 - 12.4 ☐ >12.5

3) Flash Point: ☐ <90 °F ☐ 90 - 140 °F ☐ >140 °F ☒ >200 °F

4) Physical state at 70 °F: ☒ Solid ☐ Dust ☐ Liquid ☐ Soil ☐ Sludge (non pumpable)

5) Does this waste contain debris? X Yes ____ No

If yes, please describe Asphalt, stone, gravel

© 1996 EQ - The Environmental Quality Company

Section E - Generating Process and Regulatory Information

1) Waste common name: PCB Contaminated Soil

2) Provide a *detailed* description of the process(es) generating this waste (describe each step and attach a flow diagram, if available): Asphalt, gravel, and soil was excavated to create a drainage ditch. Drainage lines were installed in the ditch to drain runoff from the roof of a building. The asphalt, gravel, and soil was stockpiled and characterized for disposal.

3) Describe the composition of the waste (attach analytical data or MSDS's, if available):

Soil	to 30-40	%
Misc. Debris - gravel, stone, asphalt.	to 60-70	%
	to	%
	to	%
	to	%

Total = 100 %

4) Based upon RCRA waste regulations (40 CFR 261), Michigan Act 451 Rules, and TSCA regulations:

	Yes	No	Code or Comment
A) Is this an EPA RCRA hazardous waste (D, F, K, U or P)?		X	
B) Does this waste leach Copper>100 mg/l or Zinc>500 mg/l?		X	
C) Is this an EPA RCRA Characteristic (D-coded) hazardous waste containing underlying hazardous constituents? If yes, please fill out UTS Certification Form provided.		X	
D) Is this a Michigan Act 451 nonhazardous liquid waste?		X	
E) Is this a Michigan Act 451 hazardous waste?		X	
F) Does this waste exceed LDR treatment standards?		X	
G) Does this waste contain free liquids? (use paint filter test)		X	
H) Does this waste contain metallic fines or powders?		X	
I) Does this waste contain greater than or equal to 500 ppmw VOC?		X	
J) Does this waste contain reactive cyanide above 250 ppm or reactive sulfide above 500 ppm?		X	
K) Is this a dioxin or furan bearing waste as per 40 CFR part 261.31?		X	
L) Does this waste contain HOCs >1000 ppm?		X	
M) Is this a liquid waste containing Nickel >134 mg/l or Thallium >130 mg/l?		X	
N) Does this waste contain asbestos?(friable or nonfriable?)		X	
O) Does this waste contain biodegradable sorbents?		X	
P) Is this a PCB waste regulated by TSCA? If yes, please complete Section G.	X		

Section F - Reclamation/Recycling/Fuel Blending

(Complete for Michigan Recovery Systems, Inc. Only) N/A

1) Heat value (BTU/lb):_____ 3) Chlorine(%):_____ 5) PCBs (total ppm):_____

2) Water (%):_____ 4) Solids (%):_____

Section G - PCB

(Complete only if you answered "yes" to Section E, Question 4P)

1) Does the waste contain PCBs at >50 ppm or is the PCB contamination from a source with concentration of >50 ppm? X Yes ____ No

2) Does this waste contain free liquids? (use paint filter test) ____ Yes X No

3) Is the non-liquid PCB waste in the form of soil, rags, or other debris? X Yes ____ No
If yes, it may be disposed at Wayne Disposal, Inc.

4) Are the PCB capacitors come from a PCB capacitor or equipment manufacturer? ____ Yes ____ No X NA

5) Has the PCB Article (e.g., transformer, hydraulic machine, PCB-contaminated electrical equipment) been drained of all PCBs and decontaminated in accordance with 40 CFR 761.60(b)? ____ Yes ____ No N/A

© 1996 EQ - The Environmental Quality Company

Section H - TCLP Regulatory Action Levels Certifications

Please indicate which constituent concentrations are below the regulatory level in column 1 or write in the actual level if the concentration is greater than the regulatory level in column 2:

Based on: ☒ Analysis ☐ Generator Knowledge (Is analysis attached? X Yes ___ No)

Code		(1) Concentration (mg/l)		(2) Actual Concentration MG/KG	Code		(1) Concentration (mg/l)		(2) Actual Concentration MG/KG
D004	Arsenic		<5	6.6	D023	O-Cresol		<200	
D005	Barium		<100	42.1	D024	M-Cresol		<200	
D006	Cadmium		<1	.07	D025	P-Cresol		<200	
D007	Chromium		<5	13.6	D026	Cresols		<200	
D008	Lead	.005	<5	12.4	D027	1,4-Dichlorobenzene		<7.5	
D009	Mercury		<0.2		D028	1,2-Dichloroethane		<0.5	
D010	Selenium		<1	0.95	D029	1,1-Dichloroethylene		<0.7	
D011	Silver		<5		D030	2,4-Dinitrotoulene		<0.13	.56
001D	Copper		<100	12.3	D031	Heptachlor		<0.008	
003D	Zinc		<500	34.3	D032	Hexachlorobenzene		<0.13	
D012	Endrin		<0.02		D033	Hexachlorobutadiene		<0.5	
D013	Lindane		<0.4		D034	Hexachloroethane		<3.0	
D014	Methoxychlor		<10		D035	Methyl Ethyl Ketone		<200	
D015	Toxaphene		<0.5		D036	Nitrobenzene		<2	1.7
D016	2,4-D		<10		D037	Pentachlorophenol		<100	
D017	2,4,5-TP(silvex)		<1		D038	Pyridine		<5	
D018	Benzene		<0.5		D039	Tetrachloroethylene		<0.7	
D019	Carbon-Tetrachloride		<0.5		D040	Trichloroethylene		<0.5	
D020	Chlordane		<0.03		D041	2,4,5-Trichlorophenol		<400	
D021	Chlorobenzene		<100		D042	2,4,6-Trichlorophenol		<2	
D022	Chloroform		<6.0		D043	Vinyl Chloride		<0.02	

Section I - Benzene NESHAP 40 CFR 61, subpart FF

1) Does the waste stream come from a facility with one of the SIC codes listed under the NESHAP?
___Yes X No If yes, which SIC Number?_____
2) Does the waste contain >10% water? ___Yes___No
3) Does your company treat wastes from facilities with Total Annual Benzene (TAB) >10 Mg/year? ___Yes___No
4) Does the waste contain >1.0 mg/kg total Benzene? ___Yes___No
If no to Question 4, stop here. If yes, please answer the remaining questions.
5) What is the total Benzene concentration in your waste? percent or _____ ppmw.
(Do not use TCLP analytical results. Acceptable laboratory methods include 8020, 8240, 8260, 602, and 624.)
6) What is the TAB quantity for your facility? _____ Mg/Year

NESHAP SIC CODES		
2812	2836	2875
2813	2841	2879
2816	2842	2891
2819	2843	2892
2821	2844	2893
2822	2851	2895
2823	2861	2899
2824	2865	2911
2833	2869	3312
2834	2873	4959
2835	2874	9511

Section J - Certification

I authorize EQ's Resource Team to add supplemental information to the waste approval file provided I am contacted and give verbal permission. I authorize EQ's Resource Team to obtain a sample from any waste shipment for purposes of verification and confirmation.

I certify that all information (including attached information) is complete and factual and is an accurate representation of the known and suspected hazards, pertaining to the waste described herein.

X Signature Thomas J. Brent X Title ENVIRON. PROT. SPEC.

X ted Name THOMAS J. BRENT X Date 3/23/98

X Company CRANE NSWC

© 1996 EQ - The Environmental Quality Company

WASTE ACCEPTANCE GUIDELINES

order for EQ's Resource Team to effectively manage the waste acceptance process and expedite your waste approval, we reque that the following be submitted (at a minimum): a Waste Characterization Report, a representative sample, and appropriate analytical testing results. Once EQ has reviewed and accepted the submittal, an Approval Number will be assigned to your waste stream. Upon receipt of this Approval Number and your confirmation of EQ's price quote, you may proceed with the transport of your waste stream to an EQ facility. To arrange a mutually convenient time for delivery, contact our Scheduling Coordinators, toll-free at 1-800-TRK-TRAC (875-8722). We request a 48 hour advance notice.

INSTRUCTIONS FOR COMPLETION OF WASTE CHARACTERIZATION REPORT (WCR)

(To expedite your waste approval, please complete this form in its entirety)

Labeling your Documents and Sample: The Waste Acceptance Labels that accompany this WCR should be applied to your submittal as follows: (1) After completion of the largest label, apply it to the face of the sample container (if submitting a sample); (2) Use the EQ Quality Seal to ensure your sample is tamper resistant (label must cover a portion of the jar and lid), (3) Place one of the small T# labels on the upper right-hand corner of the WCR; and (4) place the remaining T# label on the corresponding line item on your completed Chain Of Custody Record.

Section A: Select the EQ facility which best meets your environmental management needs. The facility selected will be dependent upon the type of waste generated and your treatment and/or disposal preference(s).

Section B: This Section provides pertinent customer information. Please provide the generator's Standard Industrial Classification (SIC) Code which describes the specific industry generating the waste. Include the generator's EPA ID number. In the state of Michigan, a temporary EPA ID number may be obtained from the Michigan Department of Environmental Quality (MDEQ) by calling at (517) 373-2730. Any other generating state must contact their regional EPA office. If you have not obtained an EQ Account Number previously, please contact a member of the EQ Resource Team for a Credit Application. ***Surcharge Exemption:*** Please determine if your waste is surcharge exempt. Waste will be surcharge exempt if one of the following criteria is met: Ash from incineration of hazardous and nonhazardous waste; hazardous waste exempted by MDEQ rule making action; hazardous waste removed from a contaminated site listed pursuant to Section 6 of Act 307 or if hazardous waste is removed as part of a site clean-up activity at the ense of the state or federal government; solidified hazardous waste produced by a solidification facility in Michigan and licensed er Act 64; hazardous waste generated by a one-time closure or site clean-up activity in Michigan authorized by the director of th DEQ; solids from an aggressive biological treatment facility; and/or emission control dust or sludge from the primary production o steel in electrical furnaces.

Section C: Shipping and handling information can be found in 49 CFR. The shipping mode and volume will assist in determining the appropriate environmental management facility and processing fees for your waste stream.

Section D: This Section may be based on generator knowledge.

Section E: The information provided in this Section should describe the generating process. It is advisable to include a diagram of the physical process generating the waste. Detailed descriptions of waste codes may be found in the 40 CFR Part 261.

Section F: Information in this Section will be collected from the sample submitted to Michigan Recovery Systems, Inc.

Section G: If your waste is regulated under TSCA, refer to 40 CFR Part 761.60 for assistance in completing this Section.

Section H: This Section may be based on generator knowledge or independent laboratory analysis. The extent of analysis required will be dependent upon the type of waste generated and regulatory permitting requirements for TSDF's.

Section I: Complete this Section ONLY if the SIC Code, which you have indicated in Section B above, appears in the box. Refer to 40 CFR Part 61, Subpart FF for more information.

A generator's signature must appear on the EQ Waste Characterization Report. If the generator has authorized a third-party to process this waste stream for environmental management, a written notice (on generator letterhead), must accompany your submittal. Although the EQ Resource Team is authorized to make certain modifications to the information provided, the addition or removal of waste codes must be approved by the generator.

For Assistance Contact Your EQ Resource Team at
1-800-KWALITY (592-5489)

© 1996 EQ - The Environmental Quality Company

DNR WASTE MANAGEMENT DIVISION
MICHIGAN DEPARTMENT OF NATURAL RESOURCES

DO NOT WRITE IN THIS SPACE
ATT. ☐ DIS. ☐ REJ. ☐ PR. ☐

Part 121 of Act 451, 1994, as amended.

Failure to file may subject you to criminal and/or civil penalties, under Sections 324.11151 or 324.12116 MCL.

Please print or type.

Form Approved. OMB No. 2050-0039 Expires 9-30-96

UNIFORM HAZARDOUS WASTE MANIFEST

1. Generator's US EPA ID No. ~~0H~~ MI 5 1 7 0 0 2 3 4 9 8 — Manifest Document No.

2. Page 1 of 1

Information in the shaded areas is not required by Federal law.

3. Generator's Name and Mailing Address
Naval Surface Warfare Center
P.O. Box 310, Crane Village, IN 47522

4. Generator's Phone (812) 854-6160

A. State Manifest Document Number: MI 4420142

B. State Generator's ID

5. Transporter 1 Company Name: Dart Trucking Company, Inc.

6. US EPA ID Number: 0 H D 0 0 9 8 6 5 8 2 5

C. State Transporter's ID

D. Transporter's Phone: 800-541-8206

7. Transporter 2 Company Name

8. US EPA ID Number

E. State Transporter's ID: OHTJ 2591

F. Transporter's Phone

9. Designated Facility Name and Site Address
Wayne Disposal, Inc.
49350 N. I-94 Service Drive
Belleville, MI 48111

10. US EPA ID Number: M I D 0 4 3 0 9 0 6 3 3

G. State Facility's ID

H. Facility's Phone: (800) 592-5489

	11. US DOT Description (including Proper Shipping Name, Hazard Class, and ID NUMBER).	HM	12. Containers No.	Type	13. Total Quantity	14. Unit Wt/Vol	I. Waste No.	N/H
a.	RQ, Polychlorinated Biphenyl ~~Mixture~~, 9, UN2315, III (SOLID)	X	001	DT	18848	K		
b.								
c.								
d.								

J. Additional Descriptions for Materials Listed Above
NSWC contact: Tom Brent (812) 854-6160
Wayne contact: Amy Jo Meyers (800) 875-8722
ERG #171
SOIL AND ASPHALT CONTAM. (<50 PPM) FROM AN UNKNOWN SOURCE

K. Handling Codes for Wastes Listed Above: a/ / b/ / c/ / d/ /

15. Special Handling Instructions and Additional Information
Approval #032698PM Storage Start Date 4/3/98 Truck # 9089

16. GENERATOR'S CERTIFICATION: I hereby declare that the contents of this consignment are fully and accurately described above by proper shipping name and are classified, packed, marked, and labeled, and are in all respects in proper condition for transport by highway according to applicable international and national government regulations.

If I am a large quantity generator, I certify that I have a program in place to reduce the volume and toxicity of waste generated to the degree I have determined to be economically practicable and that I have selected the practicable method of treatment, storage, or disposal currently available to me which minimizes the present and future threat to human health and the environment; OR; if I am a small quantity generator, I have made a good faith effort to minimize my waste generation and select the best waste management method that is available to me and that I can afford.

Printed/Typed Name: THOMAS J. BRENT — Signature: Thomas J. Brent — Date (Month Day Year): 04 03 98

TRANSPORTER

17. Transporter 1 Acknowledgement of Receipt of Materials
Printed/Typed Name: ALAN L SHANK — Signature: [illegible] — Date (Month Day Year): 04 03 98

18. Transporter 2 Acknowledgement of Receipt of Materials
Printed/Typed Name — Signature — Date (Month Day Year)

19. Discrepancy Indication Space
WD received 19073K

FACILITY

20. Facility Owner or Operator: Certification of receipt of hazardous materials covered by this manifest except as noted in Item 19.
Printed/Typed Name: Christina Hood — Signature: Christina Hood — Date (Month Day Year): 040398

GENERATOR

ALL SPILLS MUST BE REPORTED TO THE MICHIGAN POLLUTION EMERGENCY ALERTING SYSTEM, IN MICHIGAN AT 1-800-292-4706 OR OUT OF STATE AT 517-373-7660 AND THE NATIONAL RESPONSE CENTER 1-800-424-8802 24 HOURS PER DAY.

EPA Form 8700-22 (Rev. 9/88)

To be mailed by Generator to: WASTE MANAGEMENT DIVISION, MICHIGAN DEPARTMENT OF NATURAL RESOURCES, BOX 30038

PR 5110 Rev. 5/95

CERTIFICATE OF DISPOSAL

FOR MANIFESTED PCB WASTE

This certificate is to verify the wastes identified as pcbSolid

and specified on Manifest # 4420142, Line Item a has been landfilled on

4/3, 1998 in accordance with all local, state and federal regulations by:

Wayne Disposal, Inc.

(EPA I.D. # MID048090633)

49350 N. I-94 Service Drive, Belleville, Michigan 48111
Telephone: 1-800-KWALITY (592-5489)
Fax: 1-800-KWALFAX (592-5329)

Under civil and criminal penalties of law for the making or submission of false or fraudulent statements or representations (18 U.S.C. 1001 and 15 U.S.C. 2615), I certify that the information contained in or accompnying this document is true, accurate and complete. As to the identified section(s) of this document for which I cannot personally verify truth and accuracy, I certify as the company official having supervisory responsibility for the persons who are acting under my direct instructions made the verification that this information is true accurate and complete.

Authorized Signature: _____

DNR WASTE MANAGEMENT DIVISION
MICHIGAN DEPARTMENT OF NATURAL RESOURCES

DO NOT WRITE IN THIS SPACE
ATT. ☐ DIS. ☐ REJ. ☐ PR. ☐

Failure to file may subject you to criminal and/or civil penalties, unde Sections 324.11151 or 324.12116 M

Please print or type.

Form Approved. OMB No. 2050-0039 Expires

UNIFORM HAZARDOUS WASTE MANIFEST

1. Generator's US EPA ID No. ~~OHI~~ IN 5 1 7 0 0 2 3 4 9 8 — Manifest Document No.

2. Page 1 of 1

Information in the shaded ar is not required by Fede law.

3. Generator's Name and Mailing Address
Naval Surface Warfare Center
P.O. Box 310, Crane Village, IN 47522

4. Generator's Phone (812) 854-6160

A. State Manifest Document Number MI 4420142

B. State Generator's ID

5. Transporter 1 Company Name: Dart Trucking Company, Inc.

6. US EPA ID Number: O H D 0 0 9 8 6 5 8 2 5

C. State Transporter's ID

D. Transporter's Phone 800-541-82

7. Transporter 2 Company Name

8. US EPA ID Number

E. State Transporter's ID OH TRJ 252

F. Transporter's Phone

9. Designated Facility Name and Site Address
Wayne Disposal, Inc.
49350 N. I-94 Service Drive
Belleville, MI 48111

10. US DOT Description (including Proper Shipping Name, Hazard Class, and ID NUMBER).

G. State Facility's ID

H. Facility's Phone (800) 592-5489

	11. US DOT Description (including Proper Shipping Name, Hazard Class, and ID NUMBER). HM		12. Containers No.	Type	13. Total Quantity	14. Unit Wt/Vol	I. Waste No.
a.	X	RQ, Polychlorinated Biphenyl ~~Mixture~~, 9, UN2315, III (SOLID)	0 0 1	D T	1 8 8 4 8	K	
b.							
c.							
d.							

J. Additional Descriptions for Materials Listed Above
NSWC contact: Tom Brent (812) 854-6160
Wayne contact: Amy Jo Meyers (800) 875-8722
ERG #171
SOIL AND ASPHALT CONTAMINATED PCB FROM 40 DRUM SOURCE

K. Handling Codes for Wastes Listed Above

15. Special Handling Instructions and Additional Information
Approval #032698PM Storage Start Date _____ Truck # _____

16. GENERATOR'S CERTIFICATION: I hereby declare that the contents of this consignment are fully and accurately described above by proper shipping name and are classified, packed, marked, and labeled, and are in all respects in proper condition for transport by highway according to applicable international and national government regulations.

If I am a large quantity generator, I certify that I have a program in place to reduce the volume and toxicity of waste generated to the degree I have determ to be economically practicable and that I have selected the practicable method of treatment, storage, or disposal currently available to me which minimize present and future threat to human health and the environment; OR; if I am a small quantity generator, I have made a good faith effort to minimize my w generation and select the best waste management method that is available to me and that I can afford.

GENERATOR

Printed/Typed Name: THOMAS J. BRENT — Signature: Thomas J. Brent — Date Month Day 0 4 0 3

TRANSPORTER

17. Transporter 1 Acknowledgement of Receipt of Materials

Printed/Typed Name: ALAN L SCHANK — Signature — Date Month Day 0 4 0 3

18. Transporter 2 Acknowledgement of Receipt of Materials

Printed/Typed Name — Signature — Date Month Day

FACILITY

19. Discrepancy Indication Space

20. Facility Owner or Operator: Certification of receipt of hazardous materials covered by this manifest except as noted in Item 19.

Printed/Typed Name — Signature — Date Month Day

SPILLS MUST BE REPORTED TO THE MICHIGAN POLLUTION EMERGENCY ALERTING SYSTEM, IN MICHIGAN AT 1-800-292-4706 OR OUT OF STATE AT 517-373-7660 AND THE NATIONAL RESPONSE CENTER AT 1-800-424-8802 24 HOURS PER DAY.

EPA Form 8700-22 (Rev. 9/88)

To be mailed by Generator to: WASTE MANAGEMENT DIVISION, MICHIGAN DEPARTMENT OF NATURAL RESOURCES, BOX 30038, LANSING MI 48909-7538

PF Re

* * *

Date : 04-03-98
Time : 09:30:49
Vehicle : 146

Gross Wt: 75440 lb
Tare Wt : 33900 lb
==========
Net Wt : 41540 lb
18948 Kg

SubContract No. 4324-121
American Waste Management Services, Inc.
Load # 1 20.77 Ton

4/3/98 MK

STATE OF MICHIGAN

JOHN ENGLER, Governor

DEPARTMENT OF ENVIRONMENTAL QUALITY

HOLLISTER BUILDING, PO BOX 30473 LANSING MI 48909-7973

RUSSELL J. HARDING, Director

REPLY TO:

WASTE MANAGEMENT DIVISION
PO BOX 30241
LANSING MI 48909-7741

October 21, 1996

TO USERS OF MANIFEST FORMS:

Please be advised that we have a large supply of manifests with an expiration date of September 30, 1996. We are going to continue to use this supply of manifests up. I have informed the inspectors of this problem and there will be no citations made on this item. The new manifests will not have an expiration date printed on them by the approval of the Environmental Protection Agency.

Also on the latest supply of manifests that we received, the printer made a printing error on the pink copy of the manifests. At the bottom of the form it says the pink copy is to be mailed by the generator. This is wrong. The pink copy is supposed to accompany the load to the TSD facility. Once accepted by the TSD facility, the pink copy is supposed to be signed by them and the TSD facility is to mail the form to the MDEQ.

Thank you for your attention to this matter. Please feel free to contact me if you have any questions.

Sincerely,

Connie L. Pennell

Connie L. Pennell, Supervisor
Manifest Unit
Waste Management Division
517-373-1217

DNR WASTE MANAGEMENT DIVISION
MICHIGAN DEPARTMENT OF NATURAL RESOURCES

DO NOT WRITE IN THIS SPACE
ATT. ☐ DIS. ☐ REJ. ☐ PR. ☐

Required under authority of Part 121 of Act 451, 1994, as amended.

Failure to file may subject you to criminal and/or civil penalties, under Sections 324.11151 or 324.12116 MCL.

Please print or type.

Form Approved. OMB No. 2050-0039 Expires 9-30-96

UNIFORM HAZARDOUS WASTE MANIFEST

1. Generator's US EPA ID No. IN H 5 1 7 0 0 2 3 4 9 3 2 Manifest Document No. 1 4 3

2. Page 1 of 1

Information in the shaded areas is not required by Federal law.

3. Generator's Name and Mailing Address
Naval Surface Warfare Center
P.O. Box 310, Crane Village, IN 47522

4. Generator's Phone (812) 854-6160

A. State Manifest Document Number
MI 4420143

B. State Generator's ID

5. Transporter 1 Company Name
Dart Trucking Company, Inc.

6. US EPA ID Number
O H D 0 0 9 8 6 5 8 2 5

C. State Transporter's ID

D. Transporter's Phone 800-541-8206

7. Transporter 2 Company Name

8. US EPA ID Number

E. State Transporter's ID OH TLS2991

F. Transporter's Phone

9. Designated Facility Name and Site Address
Wayne Disposal, Inc.
49350 N. I-94 Service Drive
Belleville, MI 48111

10. US EPA ID Number
M I D 0 4 3 0 9 0 6 3 3

G. State Facility's ID

H. Facility's Phone
(800) 592-5489

11. US DOT Description (including Proper Shipping Name, Hazard Class, and ID NUMBER).	HM	12. Containers No.	Type	13. Total Quantity	14. Unit Wt/Vol	I. Waste No.	N/H
a. RQ, Polychlorinated Biphenyl ~~Mixture~~, 9, UN2315, III (SOLID)	X	001	UT	20109	K		
b.							
c.							
d.							

J. Additional Descriptions for Materials Listed Above
NSWC contact: Tom Brent (812) 854-6160
Wayne contact: Amy Jo Meyers (800) 875-8722
ERG #171

K. Handling Codes for Wastes Listed Above
a/ /
b/ /
c/ /
d/ /

15. Special Handling Instructions and Additional Information
Approval #032698PH Storage Start Date 4/6/98 Truck # OH TLS 2991

16. GENERATOR'S CERTIFICATION: I hereby declare that the contents of this consignment are fully and accurately described above by proper shipping name and are classified, packed, marked, and labeled, and are in all respects in proper condition for transport by highway according to applicable international and national government regulations.

If I am a large quantity generator, I certify that I have a program in place to reduce the volume and toxicity of waste generated to the degree I have determined to be economically practicable and that I have selected the practicable method of treatment, storage, or disposal currently available to me which minimizes the present and future threat to human health and the environment; OR; if I am a small quantity generator, I have made a good faith effort to minimize my waste generation and select the best waste management method that is available to me and that I can afford.

Printed/Typed Name: THOMAS J. BRENT
Signature: Thomas J. Brent
Date: Month 04 Day 06 Year 98

17. Transporter 1 Acknowledgement of Receipt of Materials
Printed/Typed Name: Alan L Schank
Signature: 1255
Date: Month 04 Day 06 Year 98

18. Transporter 2 Acknowledgement of Receipt of Materials
Printed/Typed Name:
Signature:
Date: Month Day Year

19. Discrepancy Indication Space

20. Facility Owner or Operator: Certification of receipt of hazardous materials covered by this manifest except as noted in Item 19.
Printed/Typed Name: James M Good
Signature:
Date: Month Day Year

GENERATOR

TRANSPORTER

FACILITY

ALL CE'S MUST BE REPORTED TO THE MICHIGAN POLLUTION EMERGENCY ALERTING SYSTEM, IN MICHIGAN AT 1-800-292-4706 OR OUT OF STATE AT 517-373-7660 AND THE NATIONAL RESPONSE 1-800-424-8802 24 HOURS PER DAY.

EPA Form 8700-22 (Rev. 9/88)

PR 5110 Rev. 5/95

GENERATOR 2nd COPY

CERTIFICATE OF DISPOSAL

FOR MANIFESTED PCB WASTE

This certificate is to verify the wastes identified as PCB SOLID

and specified on Manifest # 4420143, Line Item 1 has been landfilled on

04 06, 1998 in accordance with all local, state and federal regulations by:

Wayne Disposal, Inc.

(EPA I.D. # MID048090633)

49350 N. I-94 Service Drive, Belleville, Michigan 48111
Telephone: 1-800-KWALITY (592-5489)
Fax: 1-800-KWALFAX (592-5329)

Under civil and criminal penalties of law for the making or submission of false or fraudulent statements or representations (18 U.S.C. 1001 and 15 U.S.C. 2615), I certify that the information contained in or accompnying this document is true, accurate and complete. As to the identified section(s) of this document for which I cannot personally verify truth and accuracy, I certify as the company official having supervisory responsibility for the persons who are acting under my direct instructions made the verification that this information is true accurate and complete.

Authorized Signature:

DNR WASTE MANAGEMENT DIVISION
MICHIGAN DEPARTMENT OF NATURAL RESOURCES

DO NOT WRITE IN THIS SPACE
ATT. ☐ DIS. ☐ REJ. ☐ PR. ☐

Part 121 of Act 451, 1994, as ame

Failure to file may subject you to criminal and/or civil penalties, un Sections 324.11151 or 324.12116

Please print or type. Form Approved. OMB No. 2050-0039 Expire

UNIFORM HAZARDOUS WASTE MANIFEST

1. Generator's US EPA ID No. 0 H 5 1 7 0 0 2 3 4 9 8 — Manifest Document No. 2 0 1 4 3

2. Page 1 of 1

Information in the shaded a is not required by Fe law.

3. Generator's Name and Mailing Address
Naval Surface Warfare Center
P.O. Box 310, Crane Village, IN 47522

4. Generator's Phone (812) 854-6160

A. State Manifest Document Nun.
MI 4420143

B. State Generator's ID

5. Transporter 1 Company Name: Dart Trucking Company, Inc.
6. US EPA ID Number: O H D 0 0 9 8 6 5 8 2 5

C. State Transporter's ID

D. Transporter's Phone 800-541-82

7. Transporter 2 Company Name
8. US EPA ID Number

E. State Transporter's ID OH TL52

F. Transporter's Phone

9. Designated Facility Name and Site Address
Wayne Disposal, Inc.
49350 N. I-94 Service Drive
Belleville, MI 48111
10. US EPA ID Number: M I D 0 4 8 0 9 0 6 3 3

G. State Facility's ID

H. Facility's Phone (800) 592-5489

11. US DOT Description (including Proper Shipping Name, Hazard Class, and ID NUMBER).	HM		12. Containers No.	Type	13. Total Quantity	14. Unit Wt/Vol	I. Waste No.
a.	X	RQ, Polychlorinated Biphenyl ~~Mixture~~, 9, UN2315, III (SOLID)	001	DT	20109	K	
b.							
c.							
d.							

J. Additional Descriptions for Materials Listed Above
NSWC contact: Tom Brent (812) 854-6160
Wayne contact: Sandy Meyers (800) 875-8722
ERG #171
SOIL FROM SPILL TO CONTAIN (500ppm) PROBABLY UNKNOWN SOURCE

K. Handling Codes for Wastes Listed Above
a/
b/
c/
d/

15. Special Handling Instructions and Additional Information
Approval #032698PM Storage Start Date _____ Truck # _____

16. GENERATOR'S CERTIFICATION: I hereby declare that the contents of this consignment are fully and accurately described above by proper shipping name and are classified, packed, marked, and labeled, and are in all respects in proper condition for transport by highway according to applicable international and national government regulations.

If I am a large quantity generator, I certify that I have a program in place to reduce the volume and toxicity of waste generated to the degree I have deter to be economically practicable and that I have selected the practicable method of treatment, storage, or disposal currently available to me which minimiz present and future threat to human health and the environment; OR; if I am a small quantity generator, I have made a good faith effort to minimize my generation and select the best waste management method that is available to me and that I can afford.

GENERATOR

Printed/Typed Name: THOMAS J. BRENT
Signature: Thomas J. Brent
Date: Month 04 Day 06

TRANSPORTER

17. Transporter 1 Acknowledgement of Receipt of Materials
Printed/Typed Name: ALAN L SCHAUK
Signature: RSS
Date: Month 04 Day 06

18. Transporter 2 Acknowledgement of Receipt of Materials
Printed/Typed Name
Signature
Date: Month Day

FACILITY

19. Discrepancy Indication Space

20. Facility Owner or Operator: Certification of receipt of hazardous materials covered by this manifest except as noted in Item 19.
Printed/Typed Name
Signature
Date: Month Day

ALL SPILLS MUST BE REPORTED TO THE MICHIGAN POLLUTION EMERGENCY ALERTING SYSTEM, IN MICHIGAN AT 1-800-292-4706 OR OUT OF STATE AT 517-373-7660 AND THE NATIONAL RESPONSE CENTER AT 1-800-424-8802 24 HOURS PER DAY.

EPA Form 8700-22 (Rev. 9/88)

To be mailed by Generator to: WASTE MANAGEMENT DIVISION
MICHIGAN DEPARTMENT OF NATURAL RESOURCES
BOX 30038

* * *

Date : 04-06-98
Time : 08:51:29
Vehicle : 146

Gross Wt: 78220 lb
Tare Wt : 33900 lb
==========
Net Wt : 44320 lb
20109 kg

STATE OF MICHIGAN

JOHN ENGLER, Governor

DEPARTMENT OF ENVIRONMENTAL QUALITY

HOLLISTER BUILDING, PO BOX 30473, LANSING MI 48909-7973

RUSSELL J. HARDING, Director

REPLY TO:

WASTE MANAGEMENT DIVISION
PO BOX 30241
LANSING MI 48909-7741

October 21, 1996

TO USERS OF MANIFEST FORMS:

Please be advised that we have a large supply of manifests with an expiration date of September 30, 1996. We are going to continue to use this supply of manifests up. I have informed the inspectors of this problem and there will be no citations made on this item. The new manifests will not have an expiration date printed on them by the approval of the Environmental Protection Agency.

Also on the latest supply of manifests that we received, the printer made a printing error on the pink copy of the manifests. At the bottom of the form it says the pink copy is to be mailed by the generator. This is wrong. The pink copy is supposed to accompany the load to the TSD facility. Once accepted by the TSD facility, the pink copy is supposed to be signed by them and the TSD facility is to mail the form to the MDEQ.

Thank you for your attention to this matter. Please feel free to contact me if you have any questions.

Sincerely,

Connie L Pennell

Connie L. Pennell, Supervisor
Manifest Unit
Waste Management Division
517-373-1217

UNITED STATES ENVIRONMENTAL PROTECTION AGENCY
REGION 5
HAZARDOUS WASTE MANAGEMENT PERMIT

Name of Permittees: Wayne Disposal, Incorporated and Ford Motor Company

Name of Facility: Wayne Disposal Site #2 Landfill

Facility Location: Street Address: 49350 North I-94 Service Drive

City, State: Belleville, Michigan

EPA Identification Number: MID 048 090 633

Effective Date: May 19, 1997

Expiration Date: May 19, 2002

Authorized Activities:

Pursuant to the Solid Waste Disposal Act, as amended by the Resource Conservation and Recovery Act (RCRA) of 1976, and the Hazardous and Solid Waste Amendments (HSWA) of 1984, (42 U.S.C. §6901, et seq.) (collectively referred to as "RCRA"), and regulations promulgated thereunder by the United States Environmental Protection Agency (U.S. EPA) (codified in Title 40 of the Code of Federal Regulations (40 CFR)), Federal permit conditions (hereinafter called the "permit") are issued to Wayne Disposal, Inc. (WDI) and Ford Motor Company (Ford) (hereinafter collectively called the "Permittees"), for the facility Wayne Disposal Site #2 Landfill located in Belleville, Michigan. Ford owns the land on which WDI operates a hazardous waste landfill, and is therefore named as a Co-Permittee in this permit.

The RCRA permit contains both the effective Federal permit conditions (contained herein) and the effective State permit conditions issued by the State of Michigan's RCRA program authorized under 40 CFR Part 271 (hereinafter called the "State license"). The RCRA permit authorizes the Permittees to conduct hazardous waste management activities as specified in the RCRA permit.

Permit Approval:

On October 30, 1986, the State of Michigan received final authorization pursuant to Section 3006 of RCRA, 42 U.S.C. §6926, and 40 CFR Part 271, to administer the pre-HSWA RCRA hazardous waste program. On April 8, 1996, the State of Michigan also received final authorization pursuant to Section 3006 of RCRA, 42 U.S.C.§ 6926, and 40 CFR Part 271, to administer the hazardous waste program requirements of HSWA. Because the State of Michigan has not yet received authorization to administer the entire hazardous waste program requirements of HSWA, certain permit conditions must be issued by the U.S. EPA to address these requirements. These conditions are contained in this permit.

The Permittees must comply with all terms and conditions of this permit. This permit consists of the conditions contained herein (including those in any attachments) and the applicable regulations contained in 40 CFR Parts 260, 261, 262, 264, 266, 268, 270, and 124, and applicable provisions of HSWA.

This permit is based on the assumption that the information submitted in the permit application, dated March 15, 1995, and in any subsequent amendments (hereinafter referred to as the "application") is accurate. Any inaccuracies found in this information may be grounds for the termination, revocation and reissuance, or modification of this permit (see 40 CFR 270.41, 270.42 and 270.43) and potential enforcement action. The Permittees must inform the U.S. EPA of any deviation from or changes in the information in the submitted application and certification as soon as the Permittees become aware of such deviation or changes.

Opportunity to Appeal:

Petitions for review must be submitted within 30 days after service of notice of the final permit decision. Any person who filed comments on the draft permit or participated in the public hearing may petition the Environmental Appeals Board to review any condition of the permit decision. Any person who failed to file comments or failed to participate in the public hearing on the draft permit may file a petition for review only to the extent of the changes from the draft to the final permit decision. The procedures for permit appeals are found in 40 CFR 124.19.

Effective Date:

This permit is effective as of MAY 1 9 1997, unless a review is requested under 40 CFR 124.19, and shall remain in effect for 5 years, unless revoked and reissued, or terminated (40 CFR 270.41, 270.43), or continued in accordance with 40 CFR 270.51.

BY: Norman Niedergang

Norman R. Niedergang, Director
Waste, Pesticides and Toxics Division

DATE: 4/14/97

UNITED STATES ENVIRONMENTAL PROTECTION AGENCY
REGION 5

IN THE MATTER OF:	) APPROVAL TO DISPOSE OF POLYCHLORINATED BIPHENYLS (PCBs)
Wayne Disposal, Incorporated and Ford Motor Company, WDI Landfill, Ypsilanti, Michigan,	)
Permittees.	)

AUTHORITY

This Approval is issued pursuant to Section 6(e)(1) of the Toxic Substances Control Act (TSCA) of 1976, Public Law No. 94-469, 15 U.S.C. § 2605(e)(1) and the Federal PCB Regulations, 40 CFR § 761.75. Any and all information required to be maintained under or submitted pursuant to this Approval is not subject to the requirements of the Paperwork Reduction Act of 1980, 44 U.S.C. Section 3501, et seq., because such information is collected by United States Environmental Protection Agency, Region 5 (U.S. EPA) from Wayne Disposal, Incorporated and Ford Motor Company for the purpose of assuring compliance with this Approval.

EFFECTIVE DATES

This Approval is effective upon the signature of the Regional Administrator, U.S. EPA.

BACKGROUND

Section 6(e)(1)(A) of TSCA requires that U.S. EPA promulgate rules for the disposal of Polychlorinated Biphenyls (PCBs). The rules implementing Section 6(e)(1)(A) were published in the Federal Register on February 17, 1978 (43 FR 7150) and recodified in the Federal Register on May 6, 1982 (47 FR 19527). Those rules require, among other things, that various types of PCBs be disposed of in U.S. EPA-approved disposal facilities (40 CFR Section 761.75). The February 17, 1978 Federal Register notice also designated the Regional Administrator as the approval authority for PCB disposal facilities.

APPROVAL

I. In accordance with 40 CFR § 761.75 and the aforementioned findings, U.S. EPA, has determined that the Application is consistent with TSCA and that the Cell, when operated in compliance with the Conditions of Approval, does not present an unreasonable risk of injury to health or the environment from PCB. Providing the Conditions of Approval described above are met, WDI's February 16, 1995 PCB disposal application as amended, submitted pursuant to 40 CFR § 761.75, is approved.

II. Approval to dispose of one million four hundred and thirty-five thousand (1,435,000) cubic yards of PCB waste in the Cell is hereby granted to WDI, subject to the Conditions of Approval expressed herein and consistent with the material and data included in the February 16, 1995 PCB disposal application as amended.

III. Any major modification of the Conditions of Approval or reauthorization to place waste must receive the prior written approval of the Regional Administrator.

IV. U.S. EPA, reserves the right to impose additional Conditions of Approval if the Agency has reason to believe that the Cell presents an unreasonable risk to health or the environment from PCB or if U.S. EPA issues new regulations or standards for issuing TSCA PCB approvals.

V. Violations of any applicable Federal, State and local laws or regulations; failure to comply with the terms and Conditions of Approval herein; failure of WDI to disclose all relevant information or facts to the Agency, or for any other reason which the Regional Administrator deems necessary to protect public health and the environment; may result in the suspension or termination of this Approval. This Approval may also be suspended or terminated at any time if the history of environmental civil violations or criminal convictions evidences a pattern or practice of noncompliance that demonstrates the applicants' unwillingness or inability to achieve and maintain compliance with the regulations. Violation of

the Approval, TSCA, or the PCB regulations may subject WDI to civil or criminal enforcement action.

VI. WDI is responsible for all actions of any of its agents, assigns, employees and contractors when those actions are within the scope of operating or administering the Cell and will assume full responsibility for compliance with all applicable Federal, State and local regulations including, but not limited to, any advance or emergency notification and accident reporting requirements.

VII. U.S. EPA, reserves the right for its employees or agents to inspect the Cell and support facilities at any reasonable time. U.S. EPA also reserves all legal rights available under all applicable statutes and regulations.

VIII. As the owners and operator of Master Cell VI, Ford and WDI are jointly and severably responsible for complying with all terms and conditions of this Approval; are jointly and severably liable for any violation of TSCA resulting from or associated with the operation, closure and post closure care of Master Cell VI; and are jointly and severably responsible for the closure and post closure care of Master Cell VI and the financial assurance funding for the closure and post closure care of Master Cell VI.

Valdas V. Adamkus 4/14/97

Valdas V. Adamkus
Regional Administrator
U.S. Environmental Protection Agency
Region 5

Date

THE

ENVIRONMENTAL QUALITY

COMPANY

March 18, 1998

Mr. Jim Smith
American Waste Services, Inc.
One American Way
Warren OH 44484-5555

Dear Mr. Smith:

As a valued customer of the Environmental Quality Company, Inc. (EQ), we are pleased to provide you with the following information. As of today, March 18, 1998, Wayne Disposal, Inc. (MID048090633) does not have any outstanding Notice(s) of Violation nor is the facility a CERCLA site. At present, WDI is in full compliance with all Federal, state, and local regulations.

Sincerely,
The Environmental Quality Company, Inc.

Deborah A. Chamberlain
Inside Sales Associate

MICHIGAN DISPOSAL WASTE TREATMENT PLANT
49350 North I-94 Service Drive • Belleville, MI 48111

THE ENVIRONMENTAL QUALITY COMPANY ®

Generator Approval Notification ***March 30, 1998***

Customer: AMERICAN WASTE MGMT-OH 8

Fax: (330) 856-8480

THOMAS J. BRENT
NAVAL SURFACE WARFARE CENTER
P.O. BOX 310
CRANE VILLAGE, IN 47522

This Generator Approval Notification acknowledges the acceptability of waste material(s) into the EQ environmental protection facility identified below and ensures that this facility has the appropriate permit(s) issued by federal and state regulatory agencies to properly transport, treat, and/or disposal of the waste material(s).

EQ FACILITY: **Wayne Disposal, Inc. (MID048090633)**
49350 North I-94 Service Drive, Belleville, Michigan 48111

Approval Number
032698PM

The Approval(s) listed on the following page(s) are based upon information supplied to EQ by your company. The generator is ultimately responsible for the accuracy and completeness of the characterization information provided and other information that was provided during the technical approval process. The generator must notify the EQ Customer Satisfaction Department immediately upon knowledge of any changes to this information.

The Approval(s) will expire on the date(s) noted on the following page(s). Any new Approvals obtained from EQ on future business will be valid for a period of one (1) year from the date of issuance. Within 60 days of the Approval Expiration Date, you will be notified of the requirements for recertification. Please contact our Scheduling Department at 1-800-TRKTRAC (875-8722) to coordinate delivery of your waste stream(s).

If you have any questions, please call us toll free at
1-800-KWALITY (592-5489)

YOUR BUSINESS. OUR SOLUTIONS. A PRODUCTIVE PARTNERSHIP®

THE ENVIRONMENTAL QUALITY COMPANY ®

Generator Approval Notification *March 30, 1998*

Customer: AMERICAN WASTE MGMT-OH 8

Fax: (330) 856-8480

EQ FACILITY: AMERICAN WASTE MGMT-OH 8

Approval Number:	032698PM		
Generator Name:	NAVAL SURFACE WARFARE CENTER		
Waste Common Name:	PCB CONTAMINATED SOIL		
Generator EPA ID #:	IN5170023498	**Approved Container:**	TONS
Primary Waste Code:	PCB1	**Approval Expires On:**	03/26/99
Secondary Waste Code(s):	NONE		
Generator Comments:			