N00164.AR.000873
NSWC CRANE
5090.3a

Quality Assurance Project Plan Addendum No. 2 for Mine Fill A (SWMU 12) Mine Fill B (SWMU 13) Cast High Explosives Fill/ B146 Incinerator (SWMU 16) and Pyrotechnic Test Area (SWMU 19)

RCRA Facility Investigation

VOLUME II OF II - Appendices

Naval Surface Warfare Center Crane

Crane, Indiana

NAVFAC
Naval Facilities Engineering Command

Southern Division
Naval Facilities Engineering Command

Contract Number N62467-94-D-0888

Contract Task Order 0343

June 2004

APPENDIX A

POSTIVE HIT TABLES FOR

ROUND 1 AND ROUND 2

AT SWMUs 13 & 16 FOR

ALL SAMPLED MEDIA

SWMU 13

SWMU 13
GROUNDWATER

APPENDIX A
POSITIVE HITS TABLE
GROUND WATER - ROUNDS 1 AND 2
SWMU 13 - MINE FILL B
NSWC CRANE, INDIANA

LOCATION	13MWT01	13MWT01	13MWT02	13MWT02	13MWT03	13MWT03	13MWT03	13MWT03	13MWT04	13MWT04	13MWT05	13MWT05	13MWT05	13MWT05
NSAMPLE	13GWT0101	13GWT0102	13GWT0201	13GWT0202	13GWT0301	13GWT0301-F	13GWT0302	13GWT0302-F	13GWT0401	13GWT0402	13GWT0501	13GWT0501-F	13GWT0502	13GWT0502-F
SAMPLE	13GWT0101	13GWT0102	13GWT0201	13GWT0202	13GWT0301	13GWT0301-F	13GWT0302	13GWT0302-F	13GWT0401	13GWT0402	13GWT0501	13GWT0501-F	13GWT0502	13GWT0502-F
MATRIX	GW	GW	GW	GW	GW	GF	GW	GF	GW	GW	GW	GF	GW	GF
DEPTH RANGE	---	---	---	---	---	---	---	---	---	---	---	---	---	---
SAMPLE DATE	4/26/2003	11/23/2003	4/26/2003	12/7/2003	4/26/2003	4/26/2003	11/11/2003	11/11/2003	4/27/2003	11/23/2003	4/27/2003	4/27/2003	11/6/2003	11/6/2003
ROUND	01	02	01	02	01	01	02	02	01	02	01	01	02	02
VALIDATED	Y	Y	Y	Y	Y	Y	Y	Y	Y	Y	Y	Y	Y	Y
COLLECTION METHOD	GRAB	GRAB	GRAB	GRAB	GRAB	GRAB	GRAB	GRAB	GRAB	GRAB	GRAB	GRAB	GRAB	GRAB
Volatile Organics (ug/L)														
TRICHLOROETHENE														
Explosives (ug/L)														
1,3,5-TRINITROBENZENE	0.47 U	0.263 U	0.495 U	0.278 U	0.265 U		0.255 U		0.26 U	0.281 U	0.155 U		0.263 UJ	
1,3-DINITROBENZENE	0.47 U	0.263 U	0.495 U	0.278 U	0.265 U		0.255 U		0.26 U	0.281 U	0.3 J		0.263 U	
2,4,6-TRINITROTOLUENE	0.47 U	0.263 U	0.495 U	0.278 U	0.265 U		0.255 U		0.26 U	0.281 U	0.155 U		0.263 UJ	
2,4-DIAMINO-6-NITROTOLUENE		0.263 U		0.278 U			0.255 U			0.281 U			0.263 U	
2,4-DINITROTOLUENE	0.47 U	0.263 U	0.495 U	0.278 U	0.265 U		0.255 U		0.26 U	0.281 U	0.155 U		0.263 UJ	
2,6-DIAMINO-4-NITROTOLUENE		0.263 U		0.278 U			0.255 U			0.281 U			0.263 U	
2,6-DINITROTOLUENE	0.47 U	0.263 U	0.495 U	0.278 U	0.265 U		0.255 U		0.26 U	0.281 U	0.155 U		0.263 UJ	
2-AMINO-4,6-DINITROTOLUENE	0.47 U	0.263 U	0.495 U	0.278 U	0.265 U		0.255 U		0.26 U	0.281 U	0.155 U		0.263 UJ	
3-NITROTOLUENE	0.47 U	0.263 U	0.495 U	0.278 U	0.265 U		0.255 U		0.26 U	0.281 U	0.155 U		0.263 UJ	
4-AMINO-2,6-DINITROTOLUENE	0.47 U	0.263 U	0.495 U	0.278 U	0.265 U		0.255 U		0.26 U	0.281 U	0.155 U		0.263 U	
4-NITROTOLUENE	0.47 U	0.263 U	0.495 U	0.278 U	0.265 U		0.255 U		0.26 U	0.281 U	0.155 U		0.263 UJ	
DNX		0.263 U		0.278 U			0.255 U			0.281 U			0.31 J	
HMX	1	1	0.495 U	0.278 U	0.29 J		0.51 J		3.3	4.1	13		10	
MNX		0.263 U		0.278 U			0.255 U			0.281 U			0.263 U	
RDX	0.44 U	0.35 J	0.465 U	0.278 U	0.25 U		0.3 J		4.1	3.4	0.77 J		1.4	
TNX		0.263 U		0.278 U			0.255 U			0.281 U			0.263 U	
Total Inorganics (ug/L)														
ALUMINUM	598 J	699 J	659 J	244 J	3990 J		627 J		8050 J	1530 J	21700 J		139000 J	
ANTIMONY	0.24 U	0.02 U	0.06 U	0.06 U	0.13 U		0.02 U		0.19 U	0.02 U	0.09 U		0.32 U	
ARSENIC	0.23 U	0.17 U	0.65 J	0.87 U	1.0 J		0.31 U		1.8 J	0.5 U	4.7 J		24.1 J	
BARIUM	55.4 J	46.8 J	27.5 J	18.1 J	74.5 J		62.1 J		154 J	91.8 J	126 J		727 J	
BERYLLIUM	1.2 U	1.2 U	0.63 U	0.3 U	1.2 U		1.8 U		3.5 J	1.2 U	1.2 U		5.9 J	
CADMIUM	0.18 U	0.06 U	0.38 U	0.34 U	0.82 U		0.37 U		1.9 U	0.52 U	0.39 U		0.69 U	
CALCIUM	9720 J	7190 J	94100 J	113000 J	34800 J		26100 J		34800 J	19000 J	40200 J		35300 J	
CHROMIUM	0.20 U	0.73 U	1.1 J	0.71 U	7.1 J		1.4 U		1.5 J	0.49 U	36.4 J		145 J	
COBALT	36.0 J	29.9 J	119 J	71 J	48.8 J		25 J		111 J	38.8 J	34.2 J		48.6 J	
COPPER	2.9 J	1.4 U	2.7 J	2 J	5.6 J		3.2 J		3.8 J	2.1 J	10.1 J		48.3 J	
IRON	135 J	61.7 U	10500 J	15200 J	1910 J		344 U		5400 J	1530 J	9860 J		68900 J	
LEAD	1.4 U	1.2 U	0.53 U	0.36 U	2.0 U		0.67 U		3.2 J	0.94 U	8.1 J		46.5 J	
LITHIUM	21.1 J		208 J		74.0 J				126 J		40.0 J			
MAGNESIUM	6790 J	5850 J	60200 J	69800 J	17000 J		15800 J		16700 J	8720 J	35700 J		35400 J	
MANGANESE	689 J	566 U	4580 J	5100 J	302 J		211 J		1330 J	441 U	172 J		209 J	
MERCURY	0.16 J	0.39	0.02 U	0.007 U	0.02 U		0.02 U		0.02 U	0.007 U	0.02 U		0.097 J	
NICKEL	26.6 J	21.1 J	289 J	170 J	99.7 J		76.3 J		314 J	107 J	96.2 J		153 J	
POTASSIUM	494 J	403 J	6910 J	7090 J	2860 J		1040 J		7760 J	3920 J	8390 J		27500 J	
SELENIUM	0.17 U	0.05 U	0.91 U	0.27 U	0.32 U		0.04 U		0.61 U	0.23 U	0.42 U		1.3 U	
SODIUM	24300 J	26100 J	102000 J	129000 J	37400 J		40700 J		22800 J	19000 J	57900 J		49600 J	

APPENDIX A
POSITIVE HITS TABLE
GROUND WATER - ROUNDS 1 AND 2
SWMU 13 - MINE FILL B
NSWC CRANE, INDIANA

LOCATION	13MWT01	13MWT01	13MWT02	13MWT02	13MWT03	13MWT03	13MWT03	13MWT03	13MWT04	13MWT04	13MWT05	13MWT05	13MWT05	13MWT05
NSAMPLE	13GWT0101	13GWT0102	13GWT0201	13GWT0202	13GWT0301	13GWT0301-F	13GWT0302	13GWT0302-F	13GWT0401	13GWT0402	13GWT0501	13GWT0501-F	13GWT0502	13GWT0502-F
SAMPLE	13GWT0101	13GWT0102	13GWT0201	13GWT0202	13GWT0301	13GWT0301-F	13GWT0302	13GWT0302-F	13GWT0401	13GWT0402	13GWT0501	13GWT0501-F	13GWT0502	13GWT0502-F
MATRIX	GW	GW	GW	GW	GW	GF	GW	GF	GW	GW	GW	GF	GW	GF
DEPTH RANGE	---	---	---	---	---	---	---	---	---	---	---	---	---	---
SAMPLE DATE	4/26/2003	11/23/2003	4/26/2003	12/7/2003	4/26/2003	4/26/2003	11/11/2003	11/11/2003	4/27/2003	11/23/2003	4/27/2003	4/27/2003	11/6/2003	11/6/2003
ROUND	01	02	01	02	01	01	02	02	01	02	01	01	02	02
VALIDATED	Y	Y	Y	Y	Y	Y	Y	Y	Y	Y	Y	Y	Y	Y
COLLECTION METHOD	GRAB	GRAB	GRAB	GRAB	GRAB	GRAB	GRAB	GRAB	GRAB	GRAB	GRAB	GRAB	GRAB	GRAB
STRONTIUM	53.3 J		396 J		97.8 J				101 J		189 J			
TITANIUM	4.0 J	0.21 U	5.8 J	2.2 U	32.0 J		8.5 J		7.8 J	4.7 J	180 J		659 J	
VANADIUM	0.08 U	0.06 U	0.68 J	0.39 U	5.8 J		0.76 U		0.79 J	0.32 U	34.3 J		135 J	
ZINC	29.7 J	29.9 J	140 J	96.7 J	161 J		97.7 J		358 J	97.3 J	114 J		334 J	
Dissolved Inorganics (ug/L)														
ALUMINUM						226 J		790 J				254 J		164 U
ANTIMONY						0.36 U		0.08 U				0.10 U		0.28 U
ARSENIC						0.50 U		0.5 U				0.80 J		0.32 U
BARIUM						71.1 J		55.8 J				22.8 J		26.2 J
BERYLLIUM						1.1 U		2.5 J				0.46 U		0.5 U
CADMIUM						0.97 U		0.76 U				0.26 U		0.47 U
CALCIUM						30900 J		27100 J				39800 J		33900 J
CHROMIUM						0.48 U		0.24 U				2.6 J		0.39 U
COBALT						55.7 J		43.4 J				35.0 J		39.3 J
COPPER						4.5 J		6.2 J				3.4 J		2.5 J
IRON						344 J		219 U				93.8 J		184 U
LEAD						0.25 U		0.82 U				0.21 U		0.37 U
LITHIUM						78.5 J						27.4 J		
MAGNESIUM						16800 J		16000 J				32200 J		26000 J
MANGANESE						300 J		278 J				133 J		141 J
MERCURY						0.02 U		0.02 U				0.02 U		0.02 U
NICKEL						107 J		107 J				90.5 J		93.8 J
POTASSIUM						1890 J		1440 J				4540 J		2050 J
SELENIUM						0.33 U		0.07 U				0.28 U		0.17 U
SODIUM						35000 J		40600 J				55000 J		50500 J
STRONTIUM						97.1 J						188 J		
TITANIUM						2.6 J		3.8 U				4.5 J		3.3 U
VANADIUM						0.31 U		0.1 U				0.46 U		0.11 U
ZINC						178		158 J				111 J		190 J
Miscellaneous Parameters (mg/L)														
AMMONIA-N	0.01 U	0.005 UJ	0.13	0.24 J	0.12		0.07		0.39	0.08 J	0.05		0.65	
NITRITE/NITRATE-N	0.07	0.15 J	0.02 U	0.05 UJ	0.07		0.09		0.24	0.27 J	0.03		0.09	
TOTAL ORGANIC CARBON							0.5 U							
Field Parameters														
ALKALINITY (MG/L)				10 U			10 U						10 U	
CARBON DIOXIDE (MG/L)				40			50						33	
DISSOLVED OXYGEN (MG/L)				4			6						4	
DISSOLVED OXYGEN - METER (MG/L)	1.28	1.4	1.98	5.75	4.5		4.45		4.3	4.14	0.6		3.96	
FERROUS IRON (MG/L)				2.05			0.03						0.11	
HYDROGEN SULFIDE (H2S) (MG/L)				0			0						0	

APPENDIX A
POSITIVE HITS TABLE
GROUND WATER - ROUNDS 1 AND 2
SWMU 13 - MINE FILL B
NSWC CRANE, INDIANA

LOCATION	13MWT01	13MWT01	13MWT02	13MWT02	13MWT03	13MWT03	13MWT03	13MWT03	13MWT04	13MWT04	13MWT05	13MWT05	13MWT05	13MWT05
NSAMPLE	13GWT0101	13GWT0102	13GWT0201	13GWT0202	13GWT0301	13GWT0301-F	13GWT0302	13GWT0302-F	13GWT0401	13GWT0402	13GWT0501	13GWT0501-F	13GWT0502	13GWT0502-F
SAMPLE	13GWT0101	13GWT0102	13GWT0201	13GWT0202	13GWT0301	13GWT0301-F	13GWT0302	13GWT0302-F	13GWT0401	13GWT0402	13GWT0501	13GWT0501-F	13GWT0502	13GWT0502-F
MATRIX	GW	GW	GW	GW	GW	GF	GW	GF	GW	GW	GW	GF	GW	GF
DEPTH RANGE	---	---	---	---	---	---	---	---	---	---	---	---	---	---
SAMPLE DATE	4/26/2003	11/23/2003	4/26/2003	12/7/2003	4/26/2003	4/26/2003	11/11/2003	11/11/2003	4/27/2003	11/23/2003	4/27/2003	4/27/2003	11/6/2003	11/6/2003
ROUND	01	02	01	02	01	01	02	02	01	02	01	01	02	02
VALIDATED	Y	Y	Y	Y	Y	Y	Y	Y	Y	Y	Y	Y	Y	Y
COLLECTION METHOD	GRAB	GRAB	GRAB	GRAB	GRAB	GRAB	GRAB	GRAB	GRAB	GRAB	GRAB	GRAB	GRAB	GRAB
MANGANESE (MG/L)				5.4			0.1						1.3	
NITRITE-N (MG/L)				0.003			0.006						0.012	
OXIDATION REDUCTION POTENTIAL (MV)	220	385.4	191	157.9	152.7		345		218.1	243.6	76		432	
PH	4.68	4.17	4.61	5.25	5.56		5.32		4.77	5.24	5.83		5.4	
SPECIFIC CONDUCTANCE (MS/CM)	0.229	0.233	1.244	1.23	0.445		0.487		0.316	0.228	0.632		0.558	
SULFIDE (MG/L)				0			0.06						0.09	
TEMPERATURE (C)	12.59	17.04	15.28	10.43	13.14		18		13.73	16.45	15.18		15.42	
TURBIDITY (NTU)	3.8	4.39	6.8	6.62	38		328 >		6	6.85	8.8		18.6	

APPENDIX A
POSITIVE HITS TABLE
GROUND WATER - ROUNDS 1 AND 2
SWMU 13 - MINE FILL B
NSWC CRANE, INDIANA

LOCATION	13MWT06	13MWT06	13MWT06	13MWT06	13MWT07	13MWT07	13MWT07	13MWT07	13MWT08	13MWT08	13MWT08	13MWT08	13MWT08
NSAMPLE	13GWT0601	13GWT0601-F	13GWT0602	13GWT0602-F	13GWT0701	13GWT0702	13GWT0702-AVG	13GWT0702-D	13GWT0801	13GWT0802	13GWT0802-AVG	13GWT0802-D	13GWT0802-F
SAMPLE	13GWT0601	13GWT0601	13GWT0602	13GWT0602-F	13GWT0701	13GWT0702	13GWT0702-AVG	13FD11100301	13GWT0801	13GWT0802	13GWT0802-AVG	13FD11230301	13GWT0802-F
MATRIX	GW	GF	GW	GF	GW	GW	GW	GW	GW	GW	GW	GW	GF
DEPTH RANGE	---	---	---	---	---	---	---	---	---	---	---	---	---
SAMPLE DATE	4/27/2003	4/27/2003	12/7/2003	12/10/2003	4/27/2003	11/10/2003	11/10/2003	11/10/2003	4/26/2003	11/23/2003	11/23/2003	11/23/2003	11/23/2003
ROUND	01	01	02	01	01	02	02	02	01	02	02	02	02
VALIDATED	Y	Y	Y	Y	Y	Y	Y	Y	Y	Y	Y	Y	Y
COLLECTION METHOD	GRAB	GRAB	GRAB	GRAB	GRAB	GRAB	GRAB	GRAB	GRAB	GRAB	GRAB	GRAB	GRAB
Volatile Organics (ug/L)													
TRICHLOROETHENE													
Explosives (ug/L)													
1,3,5-TRINITROBENZENE	0.19 U		0.272 U		0.6 U	0.255 UJ	0.255 UJ	0.255 UJ	0.345 U	0.25 U	0.25 U	0.25 U	
1,3-DINITROBENZENE	0.19 U		0.272 U		0.6 U	0.255 U	0.255 U	0.255 U	0.345 U	0.25 U	0.25 U	0.25 U	
2,4,6-TRINITROTOLUENE	0.19 U		0.272 U		0.6 U	0.255 UJ	0.255 UJ	0.255 UJ	0.345 U	0.25 U	0.25 U	0.25 U	
2,4-DIAMINO-6-NITROTOLUENE			0.272 U			0.255 U	0.255 U	0.255 U		0.25 U	0.25 U	0.25 U	
2,4-DINITROTOLUENE	0.19 U		0.272 U		0.6 U	0.255 UJ	0.255 UJ	0.255 UJ	0.345 U	0.25 U	0.25 U	0.25 U	
2,6-DIAMINO-4-NITROTOLUENE			0.272 U			0.255 U	0.255 U	0.255 U		0.25 U	0.25 U	0.25 U	
2,6-DINITROTOLUENE	0.19 U		0.272 U		0.6 U	0.255 UJ	0.255 UJ	0.255 UJ	0.345 U	0.25 U	0.25 U	0.25 U	
2-AMINO-4,6-DINITROTOLUENE	0.19 U		0.272 U		0.6 U	0.255 UJ	0.255 UJ	0.255 UJ	0.345 U	0.25 U	0.25 U	0.25 U	
3-NITROTOLUENE	0.19 U		0.272 U		0.6 U	0.255 UJ	0.255 UJ	0.255 UJ	0.345 U	0.25 U	0.25 U	0.25 U	
4-AMINO-2,6-DINITROTOLUENE	0.19 U		0.272 U		0.6 U	0.255 U	0.255 U	0.255 U	0.345 U	0.25 U	0.25 U	0.25 U	
4-NITROTOLUENE	0.19 U		0.272 U		0.6 U	0.255 UJ	0.255 UJ	0.255 UJ	0.345 U	0.25 U	0.25 U	0.25 U	
DNX			0.272 U			0.255 U	0.255 U	0.255 U		0.25 U	0.25 U	0.25 U	
HMX	0.97		1.2		0.6 U	0.51	0.555	0.6	0.345 U	0.3 J	0.33 J	0.36 J	
MNX			0.272 U			0.255 U	0.255 U	0.255 U		0.25 U	0.25 U	0.25 U	
RDX	2		1.7		7.2	7.9	8.2	8.5	0.325 U	0.61 J	0.685 J	0.76 J	
TNX			0.272 U			0.255 U	0.255 U	0.255 U		0.25 U	0.25 U	0.25 U	
Total Inorganics (ug/L)													
ALUMINUM	12300 J		1960 J		4320 J	4630 J	4645 J	4660 J	907 J	5280 J	6470 J	7660 J	
ANTIMONY	0.19 U		0.13 U		0.03 U	0.02 U	0.02 U	0.02 U	0.03 U	0.09 U	0.075 U	0.06 U	
ARSENIC	4.0 J		0.61 U		1.6 J	1.6 J	1.65 J	1.7 J	0.20 U	0.79 U	1.095 U	1.4 U	
BARIUM	178 J		47.3 J		10.4 J	11.3 J	10.8 J	10.3 J	24.5 J	40 J	45.85 J	51.7 J	
BERYLLIUM	0.58 U		0.11 U		8.4 J	9.3 J	9.35 J	9.4 J	0.14 U	0.26 U	0.31 U	0.36 U	
CADMIUM	0.56 U		0.15 U		0.64 U	0.46 U	0.505 U	0.55 U	0.05 UJ	0.07 U	0.055 U	0.04 U	
CALCIUM	36700 J		27600 J		69400 J	76700 J	77750 J	78800 J	2580 U	2030 J	2070 J	2110 J	
CHROMIUM	18.7 J		3.7 J		0.71 U	0.71 U	0.78 U	0.85 U	0.99 J	5.7 J	7.3 J	8.9 J	
COBALT	3.6 J		0.48 U		140 J	121 J	122 J	123 J	2.2 J	2.4 J	2.8 J	3.2 J	
COPPER	7.3 J		1.3 U		5.0 J	5.1 J	5.1 J	5.1 J	1.0 J	2.9 J	3.55 J	4.2 J	
IRON	12000 J		1520 J		128 J	683 J	710 J	737 J	600 J	3520 J	4805 J	6090 J	
LEAD	7.1 J		1.1 U		8.4 J	9.2 J	9.35 J	9.5 J	0.34 U	1.7 U	1.775 J	2.7 J	
LITHIUM	15.7 J				154 J				6.6 J				
MAGNESIUM	17700 J		13000 J		54300 J	56300 J	57200 J	58100 J	2230 J	2540 J	2645 J	2750 J	
MANGANESE	505 J		33.6 J		1800 J	1810 J	1825 J	1840 J	57.6 U	38.3 J	47.8 J	57.3 J	
MERCURY	0.02 U		0.007 U		0.16 J	0.19 J	0.21 J	0.23	0.02 U	0.007 U	0.007 U	0.007 U	
NICKEL	11.7 J		2.9 J		299 J	315 J	314.5 J	314 J	4.2 J	6.1 J	6.85 J	7.6 J	
POTASSIUM	10300 J		4010 J		4380 J	4660 J	4725 J	4790 J	240 J	718 J	899 J	1080 J	
SELENIUM	0.69 U		0.16 U		0.13 U	0.12 U	0.15 U	0.18 U	0.08 U	0.08 U	0.075 U	0.07 U	
SODIUM	58000 J		44500 J		82300 J	92000 J	93650 J	95300 J	8360 J	8580 J	8555 J	8530 J	

APPENDIX A
POSITIVE HITS TABLE
GROUND WATER - ROUNDS 1 AND 2
SWMU 13 - MINE FILL B
NSWC CRANE, INDIANA

LOCATION	13MWT06	13MWT06	13MWT06	13MWT06	13MWT07	13MWT07	13MWT07	13MWT07	13MWT08	13MWT08	13MWT08	13MWT08	13MWT08
NSAMPLE	13GWT0601	13GWT0601-F	13GWT0602	13GWT0602-F	13GWT0701	13GWT0702	13GWT0702-AVG	13GWT0702-D	13GWT0801	13GWT0802	13GWT0802-AVG	13GWT0802-D	13GWT0802-F
SAMPLE	13GWT0601	13GWT0601	13GWT0602	13GWT0602-F	13GWT0701	13GWT0702	13GWT0702-AVG	13FD11100301	13GWT0801	13GWT0802	13GWT0802-AVG	13FD11230301	13GWT0802-F
MATRIX	GW	GF	GW	GF	GW	GW	GW	GW	GW	GW	GW	GW	GF
DEPTH RANGE	---	---	---	---	---	---	---	---	---	---	---	---	---
SAMPLE DATE	4/27/2003	4/27/2003	12/7/2003	12/10/2003	4/27/2003	11/10/2003	11/10/2003	11/10/2003	4/26/2003	11/23/2003	11/23/2003	11/23/2003	11/23/2003
ROUND	01	01	02	01	01	02	02	02	01	02	02	02	02
VALIDATED	Y	Y	Y	Y	Y	Y	Y	Y	Y	Y	Y	Y	Y
COLLECTION METHOD	GRAB	GRAB	GRAB	GRAB	GRAB	GRAB	GRAB	GRAB	GRAB	GRAB	GRAB	GRAB	GRAB
STRONTIUM	203 J				163 J				14.5 J				
TITANIUM	85.0 J		22.2 J		4.4 J	2 U	2.95 U	3.9 U	16.8 J	87.5 J	107.25 J	127 J	
VANADIUM	15.8 J		2.7 J		0.14 U	0.2 U	0.24 U	0.28 U	1.4 J	8.3 J	10.4 J	12.5 J	
ZINC	30.3 J		4.8 J		382 J	408 J	422.5 J	437 J	7.4 J	10.9 J	12.4 J	13.9 J	
Dissolved Inorganics (ug/L)													
ALUMINUM		826 J		18.3 U									92.7 U
ANTIMONY		0.17 U		0.34 U									0.02 U
ARSENIC		0.51 U		0.36 U									0.12 U
BARIUM		41.6 J		31.5 J									21.1 J
BERYLLIUM		0.05 U		0.03 U									0.12 U
CADMIUM		0.17 U		0.06 U									0.04 U
CALCIUM		34900 J		26900 J									2250 J
CHROMIUM		1.3 J		0.53 U									0.13 U
COBALT		1.3 J		0.11 U									1.9 J
COPPER		0.63 U		0.87 U									0.35 U
IRON		772 J		27.1 U									122 U
LEAD		0.30 U		0.04 U									0.07 U
LITHIUM		9.7 J											
MAGNESIUM		16700 J		12600 J									2190 J
MANGANESE		543 J		20.9 J									45.4 J
MERCURY		0.20 U		0.007 U									0.007 U
NICKEL		3.2 J		1.6 U									3.6 J
POTASSIUM		7110 J		3760 J									151 U
SELENIUM		0.29 U		0.15 U									0.04 U
SODIUM		49700 J		45800 J									8900 J
STRONTIUM		159 J											
TITANIUM		9.3 J		0.47 U									1.1 U
VANADIUM		1.1 J		0.41 U									0.14 U
ZINC		3.6 J		2.1 J									3.3 J
Miscellaneous Parameters (mg/L)													
AMMONIA-N	0.02		0.14		0.03	0.005 U	0.005 U	0.005 U	0.01 U	0.005 UJ	0.005 UJ	0.005 UJ	
NITRITE/NITRATE-N	0.03		0.7		0.07	0.025 U	0.025 U	0.025 U	0.02 U	0.025 U	0.03125 J	0.05 J	
TOTAL ORGANIC CARBON													
Field Parameters													
ALKALINITY (MG/L)										10 U	10 U		
CARBON DIOXIDE (MG/L)										45	45		
DISSOLVED OXYGEN (MG/L)										5	5		
DISSOLVED OXYGEN - METER (MG/L)	3.15		7.35		0.34	1.32	1.32		2.45	6.44	6.44		
FERROUS IRON (MG/L)										0.21	0.21		
HYDROGEN SULFIDE (H2S) (MG/L)										0	0		

APPENDIX A
POSITIVE HITS TABLE
GROUND WATER - ROUNDS 1 AND 2
SWMU 13 - MINE FILL B
NSWC CRANE, INDIANA

LOCATION	13MWT06	13MWT06	13MWT06	13MWT06	13MWT07	13MWT07	13MWT07	13MWT07	13MWT08	13MWT08	13MWT08	13MWT08	13MWT08
NSAMPLE	13GWT0601	13GWT0601-F	13GWT0602	13GWT0602-F	13GWT0701	13GWT0702	13GWT0702-AVG	13GWT0702-D	13GWT0801	13GWT0802	13GWT0802-AVG	13GWT0802-D	13GWT0802-F
SAMPLE	13GWT0601	13GWT0601	13GWT0602	13GWT0602-F	13GWT0701	13GWT0702	13GWT0702-AVG	13FD11100301	13GWT0801	13GWT0802	13GWT0802-AVG	13FD11230301	13GWT0802-F
MATRIX	GW	GF	GW	GF	GW	GW	GW	GW	GW	GW	GW	GW	GF
DEPTH RANGE	---	---	---	---	---	---	---	---	---	---	---	---	---
SAMPLE DATE	4/27/2003	4/27/2003	12/7/2003	12/10/2003	4/27/2003	11/10/2003	11/10/2003	11/10/2003	4/26/2003	11/23/2003	11/23/2003	11/23/2003	11/23/2003
ROUND	01	01	02	01	01	02	02	02	01	02	02	02	02
VALIDATED	Y	Y	Y	Y	Y	Y	Y	Y	Y	Y	Y	Y	Y
COLLECTION METHOD	GRAB	GRAB	GRAB	GRAB	GRAB	GRAB	GRAB	GRAB	GRAB	GRAB	GRAB	GRAB	GRAB
MANGANESE (MG/L)										0	0		
NITRITE-N (MG/L)										0.001	0.001		
OXIDATION REDUCTION POTENTIAL (MV)	88		180.4		278	383.6	383.6		206	266.7	266.7		
PH	6.63		6.45		3.98	3.9	3.9		5.06	5	5		
SPECIFIC CONDUCTANCE (MS/CM)	0.495		0.363		1.03	1.054	1.054		0.74	0.076	0.076		
SULFIDE (MG/L)										0	0		
TEMPERATURE (C)	12.46		12.5		15.6	18.45	18.45		14.65	15.18	15.18		
TURBIDITY (NTU)	650		22		6.8	3.01	3.01		10	36	36		

APPENDIX A
POSITIVE HITS TABLE
GROUND WATER - ROUNDS 1 AND 2
SWMU 13 - MINE FILL B
NSWC CRANE, INDIANA

LOCATION	13MWT08	13MWT08	13MWT09	13MWT09	13MWT09	13MWT09	13MWT09	13MWT09	13MWT09	13MWT09	13MWT10	13MWT10
NSAMPLE	13GWT0802-F-AVG	13GWT0802-F-D	13GWT0901	13GWT0901-AVG	13GWT0901-D	13GWT0902	13GWT0902-AVG	13GWT0903	13GWT0903-AVG	13GWT0903-D	13GWT1001	13GWT1002
SAMPLE	13GWT0802-F-AVG	13FD11230301-F	13GWT0901	13GWT0901-AVG	FD04280301	13GWT0902	13GWT0902-AVG	13GWT0903	13GWT0903-AVG	13FD12040301	13GWT1001	13GWT1002
MATRIX	GF	GF	GW	GW	GW	GW	GW	GW	GW	GW	GW	GW
DEPTH RANGE	---	---	---	---	---	---	---	---	---	---	---	---
SAMPLE DATE	11/23/2003	11/23/2003	4/28/2003	4/28/2003	4/28/2003	5/9/2003	5/9/2003	12/4/2003	12/4/2003	12/4/2003	4/27/2003	11/20/2003
ROUND	02	02	01	01	01	01	01	02	02	02	01	02
VALIDATED	Y	Y	Y	Y	Y	Y	Y	Y	Y	Y	Y	Y
COLLECTION METHOD	GRAB	GRAB	GRAB	GRAB	GRAB	GRAB	GRAB	GRAB	GRAB	GRAB	GRAB	GRAB
Volatile Organics (ug/L)												
TRICHLOROETHENE			0.3 U	0.3 U	0.3 U							
Explosives (ug/L)												
1,3,5-TRINITROBENZENE			0.215 U	0.3 U	0.385 U			1.3	1.35 J	1.4 J	0.265 U	0.266 U
1,3-DINITROBENZENE			1.4 J	1.45 J	1.5 J			2.4	2.3	2.2	0.265 U	0.266 U
2,4,6-TRINITROTOLUENE			19	19.5 J	20 J			25	22.5	20	0.265 U	0.266 U
2,4-DIAMINO-6-NITROTOLUENE								3.9	3.85 J	3.8 J		0.266 U
2,4-DINITROTOLUENE			0.215 U	0.3 U	0.385 U			0.253 U	0.2845 U	0.316 U	0.265 U	0.266 U
2,6-DIAMINO-4-NITROTOLUENE								0.253 U	0.2845 U	0.316 U		0.266 U
2,6-DINITROTOLUENE			0.215 U	0.3 U	0.385 U			9.9	9.05	8.2	0.265 U	0.266 U
2-AMINO-4,6-DINITROTOLUENE			8.6 J	8.6 J	8.6 J			13	15.5	18	0.265 U	0.266 U
3-NITROTOLUENE			0.215 U	0.3 U	0.385 U			0.253 U	0.2845 U	0.316 U	0.265 U	0.266 U
4-AMINO-2,6-DINITROTOLUENE			18	18	18			18	16.5 J	15 J	0.265 U	0.266 U
4-NITROTOLUENE			0.215 U	0.3 U	0.385 U			0.253 U	0.2845 U	0.316 U	0.265 U	0.266 U
DNX								4 J	3.3 J	2.6 J		0.266 U
HMX			84	75	66			130	111	92	0.265 U	0.45 J
MNX								7.1 J	6.3 J	5.5 J		0.266 U
RDX			1100	1100	1100			1700	1500	1300	0.25 U	0.266 U
TNX								1.5 J	1.04 J	0.58 J		0.266 U
Total Inorganics (ug/L)												
ALUMINUM			297 J	287.5 J	278 J			62.3 U	59.35 U	56.4 U	1430 J	768 J
ANTIMONY			0.03 U	0.03 U	0.03 U			0.02 U	0.03 U	0.04 U	0.03 U	0.02 U
ARSENIC			0.09 U	0.08 U	0.07 U			0.07 U	0.085 U	0.10 U	1.1 J	1 U
BARIUM			155 J	157 J	159 J			137 J	137.5 J	138 J	18.3 J	18.8 J
BERYLLIUM			0.41 U	0.415 U	0.42 U			0.14 U	0.15 U	0.16 U	4.3 J	3.1 J
CADMIUM			0.05 UJ	0.05 UJ	0.05 U			0.04 U	0.04 U	0.04 U	0.94 U	1.2 U
CALCIUM			48600 J	49350 J	50100 J			48500 J	48000 J	47500 J	26700 J	30600 J
CHROMIUM			0.02 U	0.02 U	0.02 U			0.28 U	0.245 U	0.21 U	1.0 J	0.61 U
COBALT			17.2 J	17.4 J	17.6 J			14.3 J	14.45 J	14.6 J	246 J	210 J
COPPER			1.2 J	1.3 J	1.4 J			0.65 U	0.605 U	0.56 U	4.3 J	1.3 U
IRON			25.0 U	24.85 U	24.7 U			38.2 U	33.4 U	28.6 U	3560 J	22900 J
LEAD			0.44 U	0.45 U	0.46 U			0.29 U	0.255 U	0.22 U	7.7 J	3.5 J
LITHIUM			31.1 J	31.45 J	31.8 J						158 J	
MAGNESIUM			38700 J	39300 J	39900 J			36500 J	35850 J	35200 J	22200 J	25500 J
MANGANESE			608 J	616 J	624 J			510 J	512.5 J	515 J	1580 J	1720 J
MERCURY			0.034 J	0.03 J	0.026 J			0.091 J	0.0955 J	0.10 J	0.02 U	0.007 U
NICKEL			23.7 J	24.5 J	25.3 J			18.5 J	18.85 J	19.2 J	371 J	357 J
POTASSIUM			983 J	996.5 J	1010 J			848 J	876.5 J	905 J	2570 J	3220 J
SELENIUM			0.05 U	0.06 U	0.07 U			0.10 U	0.08 U	0.06 U	0.07 U	0.04 U
SODIUM			35000 J	35850 J	36700 J			33900 J	34350 J	34800 J	25500 J	31500 J

APPENDIX A
POSITIVE HITS TABLE
GROUND WATER - ROUNDS 1 AND 2
SWMU 13 - MINE FILL B
NSWC CRANE, INDIANA

LOCATION	13MWT08	13MWT08	13MWT09	13MWT09	13MWT09	13MWT09	13MWT09	13MWT09	13MWT09	13MWT09	13MWT10	13MWT10
NSAMPLE	13GWT0802-F-AVG	13GWT0802-F-D	13GWT0901	13GWT0901-AVG	13GWT0901-D	13GWT0902	13GWT0902-AVG	13GWT0903	13GWT0903-AVG	13GWT0903-D	13GWT1001	13GWT1002
SAMPLE	13GWT0802-F-AVG	13FD11230301-F	13GWT0901	13GWT0901-AVG	FD04280301	13GWT0902	13GWT0902-AVG	13GWT0903	13GWT0903-AVG	13FD12040301	13GWT1001	13GWT1002
MATRIX	GF	GF	GW	GW	GW	GW	GW	GW	GW	GW	GW	GW
DEPTH RANGE	---	---	---	---	---	---	---	---	---	---	---	---
SAMPLE DATE	11/23/2003	11/23/2003	4/28/2003	4/28/2003	4/28/2003	5/9/2003	5/9/2003	12/4/2003	12/4/2003	12/4/2003	4/27/2003	11/20/2003
ROUND	02	02	01	01	01	01	01	02	02	02	01	02
VALIDATED	Y	Y	Y	Y	Y	Y	Y	Y	Y	Y	Y	Y
COLLECTION METHOD	GRAB	GRAB	GRAB	GRAB	GRAB	GRAB	GRAB	GRAB	GRAB	GRAB	GRAB	GRAB
STRONTIUM			229 J	232.5 J	236 J						86.9 J	
TITANIUM			2.5 J	2.45 J	2.4 J			0.65 U	0.825 U	1.0 U	5.9 J	1.8 U
VANADIUM			0.05 U	0.05 U	0.05 U			0.07 U	0.065 U	0.06 U	0.58 U	0.17 U
ZINC			22.0 J	22.45 J	22.9 J			14.5 J	14.95 J	15.4 J	208 J	245 J
Dissolved Inorganics (ug/L)												
ALUMINUM	91.95 U	91.2 U										
ANTIMONY	0.23 U	0.44 U										
ARSENIC	0.24 U	0.36 U										
BARIUM	20.35 J	19.6 J										
BERYLLIUM	0.245 U	0.37 U										
CADMIUM	0.13 U	0.22 U										
CALCIUM	2125 J	2000 J										
CHROMIUM	0.26 U	0.39 U										
COBALT	2.5 J	3.1 J										
COPPER	0.495 U	0.64 U										
IRON	144.5 U	167 U										
LEAD	0.22 U	0.37 U										
LITHIUM												
MAGNESIUM	2140 J	2090 J										
MANGANESE	46.65 J	47.9 J										
MERCURY	0.007 U	0.007 U										
NICKEL	3.6 J	3.6 J										
POTASSIUM	150 U	149 U										
SELENIUM	0.13 U	0.22 U										
SODIUM	8935 J	8970 J										
STRONTIUM												
TITANIUM	1.5 U	1.9 U										
VANADIUM	0.24 U	0.34 U										
ZINC	3.4 J	3.5 J										
Miscellaneous Parameters (mg/L)												
AMMONIA-N			3.3	3.25	3.2			3.4	3.45	3.5	0.98	0.84 J
NITRITE/NITRATE-N			92	93	94			54 J	64 J	74 J	0.02 U	0.025 U
TOTAL ORGANIC CARBON												1
Field Parameters												
ALKALINITY (MG/L)								0	0			10 U
CARBON DIOXIDE (MG/L)								48	48			154
DISSOLVED OXYGEN (MG/L)								1.5	1.5			3.5
DISSOLVED OXYGEN - METER (MG/L)			1.69	1.69		1.21	1.21	1.14	1.14		1.4	4.83
FERROUS IRON (MG/L)								0	0			3.3 >
HYDROGEN SULFIDE (H2S) (MG/L)								0	0			0

APPENDIX A
POSITIVE HITS TABLE
GROUND WATER - ROUNDS 1 AND 2
SWMU 13 - MINE FILL B
NSWC CRANE, INDIANA

LOCATION	13MWT08	13MWT08	13MWT09	13MWT09	13MWT09	13MWT09	13MWT09	13MWT09	13MWT09	13MWT09	13MWT10	13MWT10
NSAMPLE	13GWT0802-F-AVG	13GWT0802-F-D	13GWT0901	13GWT0901-AVG	13GWT0901-D	13GWT0902	13GWT0902-AVG	13GWT0903	13GWT0903-AVG	13GWT0903-D	13GWT1001	13GWT1002
SAMPLE	13GWT0802-F-AVG	13FD11230301-F	13GWT0901	13GWT0901-AVG	FD04280301	13GWT0902	13GWT0902-AVG	13GWT0903	13GWT0903-AVG	13FD12040301	13GWT1001	13GWT1002
MATRIX	GF	GF	GW	GW	GW	GW	GW	GW	GW	GW	GW	GW
DEPTH RANGE	---	---	---	---	---	---	---	---	---	---	---	---
SAMPLE DATE	11/23/2003	11/23/2003	4/28/2003	4/28/2003	4/28/2003	5/9/2003	5/9/2003	12/4/2003	12/4/2003	12/4/2003	4/27/2003	11/20/2003
ROUND	02	02	01	01	01	01	01	02	02	02	01	02
VALIDATED	Y	Y	Y	Y	Y	Y	Y	Y	Y	Y	Y	Y
COLLECTION METHOD	GRAB	GRAB	GRAB	GRAB	GRAB	GRAB	GRAB	GRAB	GRAB	GRAB	GRAB	GRAB
MANGANESE (MG/L)								0.4	0.4			1.8
NITRITE-N (MG/L)								0.023	0.023			0.003
OXIDATION REDUCTION POTENTIAL (MV)			205.6	205.6		148	148	251	251		364	230.3
PH			5.36	5.36		5.38	5.38	5.32	5.32		3.01	4.74
SPECIFIC CONDUCTANCE (MS/CM)			0.829	0.829		0.725	0.725	0.64	0.64		0.582	0.52
SULFIDE (MG/L)								0.01	0.01			0.05
TEMPERATURE (C)			13.33	13.33		14.36	14.36	12.82	12.82		15.6	19.73
TURBIDITY (NTU)			3	3		0.1	0.1	4.07	4.07		10	5.79

APPENDIX A
POSITIVE HITS TABLE
GROUND WATER - ROUNDS 1 AND 2
SWMU 13 - MINE FILL B
NSWC CRANE, INDIANA

LOCATION	13MWT11	13MWT11	13MWT12	13MWT12	13MWT12	13MWT13	13MWT13	13MWT13	13MWT13	13MWT14	13MWT14	13MWT15	13MWT15	13MWT15
NSAMPLE	13GWT1101	13GWT1102	13GWT1201	13GWT1201-F	13GWT1202	13GWT1301	13GWT1301-AVG	13GWT1301-D	13GWT1302	13GWT1401	13GWT1402	13GWT1501	13GWT1502	13GWT1502-AVG
SAMPLE	13GWT1101	13GWT1102	13GWT1201	13GWT1201-F	13GWT1202	13GWT1301	13GWT1301-AVG	FD05070301	13GWT1302	13GWT1401	13GWT1402	13GWT1501	13GWT1502	13GWT1502-AVG
MATRIX	GW	GW	GW	GF	GW	GW	GW	GW	GW	GW	GW	GW	GW	GW
DEPTH RANGE	---	---	---	---	---	---	---	---	---	---	---	---	---	---
SAMPLE DATE	4/27/2003	11/20/2003	4/27/2003	4/27/2003	11/18/2003	5/7/2003	5/7/2003	5/7/2003	11/25/2003	4/29/2003	11/24/2003	5/6/2003	11/25/2003	11/25/2003
ROUND	01	02	01	01	02	01	01	01	02	01	01	01	02	01
VALIDATED	Y	Y	Y	Y	Y	Y	Y	Y	Y	Y	Y	Y	Y	Y
COLLECTION METHOD	GRAB	GRAB	GRAB	GRAB	GRAB	GRAB	GRAB	GRAB	GRAB	GRAB	GRAB	GRAB	GRAB	GRAB
Volatile Organics (ug/L)														
TRICHLOROETHENE														
Explosives (ug/L)														
1,3,5-TRINITROBENZENE	0.43 U	0.258 U	0.6 U		0.26 U	0.37 U	0.275 U	0.18 U	0.258 U	0.345 U	0.25 U	0.485 U	0.258 U	0.258 U
1,3-DINITROBENZENE	0.83 J	0.258 U	0.6 U		0.26 U	0.37 U	0.275 U	0.18 U	0.258 U	0.345 U	0.25 U	0.485 U	0.258 U	0.258 U
2,4,6-TRINITROTOLUENE	31	9.5	1.8		1.6	0.37 U	0.275 U	0.18 U	0.258 U	0.345 U	0.25 U	0.485 U	0.258 U	0.258 U
2,4-DIAMINO-6-NITROTOLUENE		1.4 J			0.89 J				0.258 U		0.25 U		0.258 U	0.258 U
2,4-DINITROTOLUENE	0.43 U	1.2	0.6 U		0.48 J	0.37 U	0.275 U	0.18 U	0.258 U	0.345 U	0.25 U	0.485 U	0.258 U	0.258 U
2,6-DIAMINO-4-NITROTOLUENE		1.8 J			0.26 U				0.258 U		0.25 U		0.258 U	0.258 U
2,6-DINITROTOLUENE	0.43 U	1.2 J	0.6 U		0.26 U	0.37 U	0.275 U	0.18 U	0.258 U	0.345 U	0.25 U	0.485 U	0.258 U	0.258 U
2-AMINO-4,6-DINITROTOLUENE	6 J	4.4 J	3.7 J		3.1 J	0.37 U	0.275 U	0.18 U	0.258 U	0.345 U	0.25 U	0.485 U	0.258 U	0.258 U
3-NITROTOLUENE	0.43 U	0.258 U	0.6 U		0.26 U	0.37 U	0.275 U	0.18 U	0.258 U	0.345 U	0.25 U	0.485 U	0.258 U	0.258 U
4-AMINO-2,6-DINITROTOLUENE	19	9.8	5.8 J		4.8	0.37 U	0.275 U	0.18 U	0.258 U	0.345 U	0.25 U	0.485 U	0.258 U	0.258 U
4-NITROTOLUENE	0.43 U	0.258 U	0.6 U		0.26 U	0.37 U	0.275 U	0.18 U	0.258 U	0.345 U	0.25 U	0.485 U	0.258 U	0.258 U
DNX		0.258 U			0.5 J				0.258 U		0.25 U		0.258 U	0.258 U
HMX	34	44	50		41	9.5	8.95	8.4	12	0.345 U	0.89 J	0.485 U	0.258 U	0.258 U
MNX		1.2			0.68				0.258 U		0.25 U		0.258 U	0.258 U
RDX	560	520	150		140	12	11	10	20	1.6	4.7	0.46 U	0.258 U	0.258 U
TNX		0.258 U			0.26 U				0.258 U		0.25 U		0.258 U	0.258 U
Total Inorganics (ug/L)														
ALUMINUM	719 J	696 J	2170 J		67 U	1080 J	1070 J	1060 J	1000 J	57.1 U	47.5 U	1440 J	4310 J	4310 J
ANTIMONY	0.03 U	0.02 U	0.03 U		0.02 U	0.03 U	0.035 U	0.04 U	0.02 U	0.03 U	0.02 U	0.03 U	0.09 U	0.09 U
ARSENIC	0.22 U	0.23 U	1.3 J		0.13 U	0.39 U	0.4 U	0.41 U	0.16 U	5.8 J	3.1 J	7.0 J	9.2 J	9.2 J
BARIUM	27.4 J	27.6 J	36.5 J		21.1 J	43.8 J	43.55 J	43.3 J	52.9 J	31.1 J	19.1 J	43.3 J	39.0 J	39 J
BERYLLIUM	1.6 U	1.4 U	0.27 U		0.24 U	2.1 J	2.1 J	2.1 J	2.1 U	0.06 U	0.05 U	4.2 J	5.2 J	5.2 J
CADMIUM	0.12 U	0.13 U	0.10 U		0.04 U	0.09 U	0.105 U	0.12 U	0.04 U	0.35 U	0.04 U	1.0 U	0.63 U	0.63 U
CALCIUM	5760 J	6320 J	2800 J		1720 J	3740 J	3720 J	3700 J	3030 J	29700 J	34100 J	14600 J	10700 J	10700 J
CHROMIUM	0.35 U	0.25 U	4.1 J		0.17 U	0.29 U	0.31 U	0.33 U	0.29 U	0.18 U	0.53 U	0.82 U	4.5 J	4.5 J
COBALT	26.3 J	24 J	8.1 J		6.5 J	30.1 J	30.15 J	30.2 J	25.3 J	14.2 J	9.5 J	106 J	82.7 J	82.7 J
COPPER	3.0 J	1.6 U	2.2 J		0.7 U	5.0 J	4.95 J	4.9 J	3.6 J	0.28 U	0.3 U	3.0 J	0.87 U	0.87 U
IRON	4250 J	4340 J	2020 J		129 U	860 J	853 J	846 J	162 J	10500 J	9740 J	9260 J	17500 J	17500 J
LEAD	1.5 U	1.4 U	1.9 U		0.08 U	1.0 U	0.995 U	0.99 U	0.63 U	0.20 U	0.04 U	23.8 J	35.9 J	35.9 J
LITHIUM	66.8 J		15.3 J			29.3 J	29 J	28.7 J		33.9 J		133 J		
MAGNESIUM	4770 J	4660 J	2560 J		2370 J	3660 J	3670 J	3680 J	3420 J	26100 J	29500 J	14300 J	13200 J	13200 J
MANGANESE	250 J	251 U	216 J		312 U	600 J	592 J	584 J	451 J	1910 J	1880 J	1300 J	821 J	821 J
MERCURY	0.032 J	0.007 U	0.02 U		0.035 J	0.20 U	0.2 U	0.20 U	0.007 U	0.02 U	0.007 U	0.20 U	0.007 U	0.007 U
NICKEL	66.5 J	61 J	16.4 J		15.3 J	25.3 J	25.05 J	24.8 J	20.4 J	24.7 J	20 J	222 J	182 J	182 J
POTASSIUM	668 J	687 J	724 J		358 J	649 J	645 J	641 J	459 J	2080 J	2010 J	2230 J	2550 J	2550 J
SELENIUM	0.05 U	0.04 U	0.25 U		0.14 U	0.10 U	0.11 U	0.12 U	0.06 U	0.41 U	0.04 U	1.1 U	0.10 U	0.1 U
SODIUM	24000 J	26000 J	21900 J		20600 J	6030 J	6180 J	6330 J	6800 J	48300 J	57400 J	16000 J	16300 J	16300 J

APPENDIX A
POSITIVE HITS TABLE
GROUND WATER - ROUNDS 1 AND 2
SWMU 13 - MINE FILL B
NSWC CRANE, INDIANA

LOCATION	13MWT11	13MWT11	13MWT12	13MWT12	13MWT12	13MWT13	13MWT13	13MWT13	13MWT13	13MWT14	13MWT14	13MWT15	13MWT15	13MWT15
NSAMPLE	13GWT1101	13GWT1102	13GWT1201	13GWT1201-F	13GWT1202	13GWT1301	13GWT1301-AVG	13GWT1301-D	13GWT1302	13GWT1401	13GWT1402	13GWT1501	13GWT1502	13GWT1502-AVG
SAMPLE	13GWT1101	13GWT1102	13GWT1201	13GWT1201-F	13GWT1202	13GWT1301	13GWT1301-AVG	FD05070301	13GWT1302	13GWT1401	13GWT1402	13GWT1501	13GWT1502	13GWT1502-AVG
MATRIX	GW	GW	GW	GF	GW	GW	GW	GW	GW	GW	GW	GW	GW	GW
DEPTH RANGE	---	---	---	---	---	---	---	---	---	---	---	---	---	---
SAMPLE DATE	4/27/2003	11/20/2003	4/27/2003	4/27/2003	11/18/2003	5/7/2003	5/7/2003	5/7/2003	11/25/2003	4/29/2003	11/24/2003	5/6/2003	11/25/2003	11/25/2003
ROUND	01	02	01	01	02	01	01	01	02	01	01	01	02	01
VALIDATED	Y	Y	Y	Y	Y	Y	Y	Y	Y	Y	Y	Y	Y	Y
COLLECTION METHOD	GRAB	GRAB	GRAB	GRAB	GRAB	GRAB	GRAB	GRAB	GRAB	GRAB	GRAB	GRAB	GRAB	GRAB
STRONTIUM	31.0 J		14.6 J			18.5 J	18.4 J	18.3 J		71.7 J		65.5 J		
TITANIUM	6.7 J	1 U	34.6 J		1 U	3.7 J	3.7 J	3.7 J	0.73 U	1.9 U	0.7 U	4.6 J	26.0 J	26 J
VANADIUM	0.29 U	0.06 U	4.2 J		0.07 U	0.07 U	0.085 U	0.10 U	0.06 U	0.08 U	0.08 U	0.32 U	4.3 J	4.3 J
ZINC	82.7 J	85.3 J	14.6 J		10.8 J	35.1 J	34.75 J	34.4 J	25.3	17.8 J	16.9 J	266 J	240	240
Dissolved Inorganics (ug/L)														
ALUMINUM				257 J										
ANTIMONY				0.03 U										
ARSENIC				0.37 U										
BARIUM				26.2 J										
BERYLLIUM				0.17 U										
CADMIUM				0.13 U										
CALCIUM				2980 J										
CHROMIUM				0.63 U										
COBALT				9.0 J										
COPPER				3.4 J										
IRON				203 J										
LEAD				0.31 U										
LITHIUM				14.6 J										
MAGNESIUM				2500 J										
MANGANESE				224 J										
MERCURY				0.02 U										
NICKEL				18.3 J										
POTASSIUM				366 J										
SELENIUM				0.26 U										
SODIUM				21800 J										
STRONTIUM				13.8 J										
TITANIUM				8.1 J										
VANADIUM				0.46 U										
ZINC				13.5 J										
Miscellaneous Parameters (mg/L)														
AMMONIA-N	0.1	0.1 J	0.06		0.005 UJ	0.03	0.03	0.03	0.01	0.08	0.06 J	1	1.3	1.3
NITRITE/NITRATE-N	0.02 U	0.19 J	1.3		0.3 J	1.1	1.1	1.1	1.0 J	0.13	0.05 J	0.02 U	0.05 U	0.05 U
TOTAL ORGANIC CARBON													1.1	1.15
Field Parameters														
ALKALINITY (MG/L)		10 U			10 U				10 U				10 U	10 U
CARBON DIOXIDE (MG/L)		165			135				120				137	137
DISSOLVED OXYGEN (MG/L)		1.5			2				11				0.07	0.07
DISSOLVED OXYGEN - METER (MG/L)	0.85	3.49	2.35		2.02	3.37	3.37		3.26	1.2	0.52	0.53	7.79	7.79
FERROUS IRON (MG/L)		3.3 >			0.1				0.03				3.3 >	3.3 >
HYDROGEN SULFIDE (H2S) (MG/L)		0			0				0				0	0

APPENDIX A
POSITIVE HITS TABLE
GROUND WATER - ROUNDS 1 AND 2
SWMU 13 - MINE FILL B
NSWC CRANE, INDIANA

LOCATION	13MWT11	13MWT11	13MWT12	13MWT12	13MWT12	13MWT13	13MWT13	13MWT13	13MWT13	13MWT14	13MWT14	13MWT15	13MWT15	13MWT15
NSAMPLE	13GWT1101	13GWT1102	13GWT1201	13GWT1201-F	13GWT1202	13GWT1301	13GWT1301-AVG	13GWT1301-D	13GWT1302	13GWT1401	13GWT1402	13GWT1501	13GWT1502	13GWT1502-AVG
SAMPLE	13GWT1101	13GWT1102	13GWT1201	13GWT1201-F	13GWT1202	13GWT1301	13GWT1301-AVG	FD05070301	13GWT1302	13GWT1401	13GWT1402	13GWT1501	13GWT1502	13GWT1502-AVG
MATRIX	GW	GW	GW	GF	GW	GW	GW	GW	GW	GW	GW	GW	GW	GW
DEPTH RANGE	---	---	---	---	---	---	---	---	---	---	---	---	---	---
SAMPLE DATE	4/27/2003	11/20/2003	4/27/2003	4/27/2003	11/18/2003	5/7/2003	5/7/2003	5/7/2003	11/25/2003	4/29/2003	11/24/2003	5/6/2003	11/25/2003	11/25/2003
ROUND	01	02	01	01	02	01	01	01	02	01	01	01	02	01
VALIDATED	Y	Y	Y	Y	Y	Y	Y	Y	Y	Y	Y	Y	Y	Y
COLLECTION METHOD	GRAB	GRAB	GRAB	GRAB	GRAB	GRAB	GRAB	GRAB	GRAB	GRAB	GRAB	GRAB	GRAB	GRAB
MANGANESE (MG/L)		0.3			0.4				0.5				0.9	0.9
NITRITE-N (MG/L)		0.009			0				0				0.001	0.001
OXIDATION REDUCTION POTENTIAL (MV)	265	355	242		305.9	268.2	268.2		385.1	23.2	100.5	286.8	322	322
PH	3.64	3.93	4.83		4.87	4.2	4.2		3.56	5.5	5.48	3.74	3.98	3.98
SPECIFIC CONDUCTANCE (MS/CM)	0.251	0.238	0.135		0.131	0.106	0.106		0.113	0.885	0.623	0.391	0.34	0.34
SULFIDE (MG/L)		0.01			0.01				0				0.14	0.14
TEMPERATURE (C)	15.73	16.35	14.46		16.37	13.82	13.82		12.33	14.34	10.77	15.89	12.28	12.28
TURBIDITY (NTU)	10	4.52	60		29.1	5.8	5.8		0.38	1.6	0	7.3	45.4	45.4

APPENDIX A
POSITIVE HITS TABLE
GROUND WATER - ROUNDS 1 AND 2
SWMU 13 - MINE FILL B
NSWC CRANE, INDIANA

LOCATION	13MWT15	13MWT15	13MWT16	13MWT16	13MWT17	13MWT17	13MWT17	13MWT17	13MWT18	13MWT18	13MWT18	13MWT18	13MWT19	13MWT19
NSAMPLE	13GWT1502-D	13GWT1502-F	13GWT1601	13GWT1602	13GWT1701	13GWT1702	13GWT1702-AVG	13GWT1702-D	13GWT1801	13GWT1801-F	13GWT1802	13GWT1802-F	13GWT1901	13GWT1902
SAMPLE	13FD11250301	13GWT1502-F	13GWT1601	13GWT1602	13GWT1701	13GWT1702	13GWT1702-AVG	13FD11050301	13GWT1801	13GWT1801-F	13GWT1802	13GWT1802-F	13GWT1901	13GWT1902
MATRIX	GW	GF	GW	GW	GW	GW	GW	GW	GW	GF	GW	GF	GW	GW
DEPTH RANGE	---	---	---	---	---	---	---	---	---	---	---	---	---	---
SAMPLE DATE	11/25/2003	11/25/2003	5/6/2003	11/20/2003	5/7/2003	11/5/2003	11/5/2003	11/5/2003	5/6/2003	5/6/2003	12/7/2003	12/7/2003	5/7/2003	10/28/2003
ROUND	01	01	01	02	01	02	02	02	01	01	02	02	01	02
VALIDATED	Y	Y	Y	Y	Y	Y	Y	Y	Y	Y	Y	Y	Y	Y
COLLECTION METHOD	GRAB	GRAB	GRAB	GRAB	GRAB	GRAB	GRAB	GRAB	GRAB	GRAB	GRAB	GRAB	GRAB	GRAB
Volatile Organics (ug/L)														
TRICHLOROETHENE														
Explosives (ug/L)														
1,3,5-TRINITROBENZENE			0.11 U	0.144 U	0.43 U	0.25 UJ	0.25 UJ	0.25 UJ	0.08 U		0.301 U		0.55 U	0.26 U
1,3-DINITROBENZENE			0.11 U	0.144 U	0.43 U	0.25 U	0.25 U	0.25 U	0.08 U		0.301 U		0.55 U	0.26 U
2,4,6-TRINITROTOLUENE			0.11 U	0.144 U	0.43 U	0.25 UJ	0.25 UJ	0.25 UJ	0.08 U		0.301 U		0.55 U	0.26 U
2,4-DIAMINO-6-NITROTOLUENE				0.287 U		0.25 U	0.25 U	0.25 U			0.301 U			0.26 U
2,4-DINITROTOLUENE			0.11 U	0.144 U	0.43 U	0.25 UJ	0.25 UJ	0.25 UJ	0.08 U		0.301 U		0.55 U	0.26 U
2,6-DIAMINO-4-NITROTOLUENE				0.287 U		0.25 U	0.25 U	0.25 U			0.301 U			0.26 U
2,6-DINITROTOLUENE			0.11 U	0.144 U	0.43 U	0.25 UJ	0.25 UJ	0.25 UJ	0.08 U		0.301 U		0.55 U	0.26 U
2-AMINO-4,6-DINITROTOLUENE			0.11 U	0.144 U	0.43 U	0.28 J	0.325 J	0.37 J	0.08 U		0.301 U		0.55 U	0.26 U
3-NITROTOLUENE			0.11 U	0.144 U	0.43 U	0.25 UJ	0.25 UJ	0.25 UJ	0.08 U		0.301 U		0.55 U	0.26 U
4-AMINO-2,6-DINITROTOLUENE			0.12 J	0.144 U	0.6 J	0.71	0.75	0.79	0.08 U		0.301 U		0.55 U	0.26 U
4-NITROTOLUENE			0.11 U	0.144 U	0.43 U	0.25 UJ	0.25 UJ	0.25 UJ	0.08 U		0.301 U		0.55 U	0.26 U
DNX				5.8 J		2.2 J	2.2 J	2.2 J			0.301 U			0.26 U
HMX			22 J	120	92 J	140	135	130	8.6		14		6.4	6.2
MNX				3.6 J		11	11	11			2.9			0.26 U
RDX			10	16	430	580	560	540	150		240		5.9	5.4
TNX				0.31 J		1.2	1.2	1.2			0.301 U			0.26 U
Total Inorganics (ug/L)														
ALUMINUM			123 J	116 U	418 J	419 J	379 J	339 J	19000 J		2080 J		195 J	193 J
ANTIMONY			0.33 U	0.02 U	0.03 U	0.56 U	0.325 U	0.09 U	0.12 U		0.02 U		0.31 U	0.02 U
ARSENIC			0.66 U	0.35 U	0.50 U	0.74 U	0.605 U	0.47 U	4.2 J		0.52 U		0.43 U	0.81 U
BARIUM			72.9 J	69.3 J	19.3 J	19.6 J	19.1 J	18.6 J	118 J		20.7 J		401 J	314 J
BERYLLIUM			0.13 U	0.03 U	0.04 U	0.5 U	0.275 U	0.05 U	3.0 J		1.5 U		0.77 U	0.56 U
CADMIUM			0.14 U	0.04 U	0.05 U	0.43 U	0.235 U	0.04 U	0.33 U		0.04 U		0.72 U	0.43 U
CALCIUM			27200 J	46000 J	12100 J	11400 J	11300 J	11200 J	19300 J		16000 J		32500 J	25700 J
CHROMIUM			0.29 U	0.33 U	0.63 U	0.82 U	0.675 U	0.53 U	25.6 J		2.6 J		0.59 U	1 U
COBALT			5.4 J	0.95 U	1.5 J	1.5 U	1.4 U	1.3 U	52.8 J		27.1 J		44.1 J	14.8 J
COPPER			0.59 U	1.2 U	0.26 U	0.73 U	0.65 U	0.57 U	14.0 J		1.4 U		1.1 U	1.3 U
IRON			2570 J	159 U	357 J	440 U	400.5 U	361 U	15800 J		2440 J		117 U	325 U
LEAD			0.14 U	0.09 U	0.35 U	0.82 U	0.57 U	0.32 U	9.5 J		2 U		0.89 U	0.46 U
LITHIUM			2.3 J		5.7 J				181 J				40.8 J	
MAGNESIUM			11600 J	14400 J	9470 J	8900 J	8915 J	8930 J	25600 J		16500 J		37800 J	27300 J
MANGANESE			712 J	330 U	56.3 U	48.3 U	45.7 U	43.1 U	2170 J		1360 J		1450 J	730 J
MERCURY			0.20 U	0.007 U	0.20 U	0.02 U	0.02 U	0.02 U	0.20 U		0.007 U		0.20 U	0.02 U
NICKEL			7.1 J	5.3 J	2.9 J	3.3 J	3.1 J	2.9 J	140 J		76.8 J		79.4 J	61.5 J
POTASSIUM			576 J	500 J	481 J	605 J	582.5 J	560 J	6390 J		2970 J		1290 J	1010 J
SELENIUM			0.26 U	0.1 U	0.10 U	0.51 U	0.335 U	0.16 U	0.42 U		0.24 U		0.29 U	0.04 U
SODIUM			15000 J	25400 J	8450 J	8550 J	8550 J	8550 J	35200 J		37500 J		160000 J	123000 J

APPENDIX A
POSITIVE HITS TABLE
GROUND WATER - ROUNDS 1 AND 2
SWMU 13 - MINE FILL B
NSWC CRANE, INDIANA

LOCATION	13MWT15	13MWT15	13MWT16	13MWT16	13MWT17	13MWT17	13MWT17	13MWT17	13MWT18	13MWT18	13MWT18	13MWT18	13MWT19	13MWT19
NSAMPLE	13GWT1502-D	13GWT1502-F	13GWT1601	13GWT1602	13GWT1701	13GWT1702	13GWT1702-AVG	13GWT1702-D	13GWT1801	13GWT1801-F	13GWT1802	13GWT1802-F	13GWT1901	13GWT1902
SAMPLE	13FD11250301	13GWT1502-F	13GWT1601	13GWT1602	13GWT1701	13GWT1702	13GWT1702-AVG	13FD11050301	13GWT1801	13GWT1801-F	13GWT1802	13GWT1802-F	13GWT1901	13GWT1902
MATRIX	GW	GF	GW	GW	GW	GW	GW	GW	GW	GF	GW	GF	GW	GW
DEPTH RANGE	---	---	---	---	---	---	---	---	---	---	---	---	---	---
SAMPLE DATE	11/25/2003	11/25/2003	5/6/2003	11/20/2003	5/7/2003	11/5/2003	11/5/2003	11/5/2003	5/6/2003	5/6/2003	12/7/2003	12/7/2003	5/7/2003	10/28/2003
ROUND	01	01	01	02	01	02	02	02	01	01	02	02	01	02
VALIDATED	Y	Y	Y	Y	Y	Y	Y	Y	Y	Y	Y	Y	Y	Y
COLLECTION METHOD	GRAB	GRAB	GRAB	GRAB	GRAB	GRAB	GRAB	GRAB	GRAB	GRAB	GRAB	GRAB	GRAB	GRAB
STRONTIUM			129 J		27.4 J				39.8 J				173 J	
TITANIUM			3.2 J	3.3 J	7.2 J	10.9 J	9.8 J	8.7 J	166 J		35.4 J		5.1 J	3.7 J
VANADIUM			0.27 U	0.22 U	0.72 U	0.9 U	0.75 U	0.6 U	26.6 J		2.4 J		0.31 U	0.2 U
ZINC			3.9 J	2.8 U	3.0 J	2.7 J	1.925 J	2.3 U	175 J		75.7 J		57.0 J	48.3 J
Dissolved Inorganics (ug/L)														
ALUMINUM		1990 J								382 J		434 J		
ANTIMONY		0.27 U								0.08 U		0.26 U		
ARSENIC		8.6 J								1.4 J		0.33 U		
BARIUM		30.5 J								20.9 J		14.3 J		
BERYLLIUM		5.2 J								2.0 J		1.5 U		
CADMIUM		0.78 U								0.20 U		0.17 U		
CALCIUM		10700 J								20300 J		17900 J		
CHROMIUM		0.98 U								0.20 U		0.51 U		
COBALT		82.8 J								49.5 J		31.7 J		
COPPER		1.4 U								6.4 J		3.1 J		
IRON		16000 J								1980 J		1940 J		
LEAD		35.7 J								0.91 U		1 U		
LITHIUM										154 J				
MAGNESIUM		13000 J								22700 J		19600 J		
MANGANESE		812 J								2090 J		1660 J		
MERCURY		0.007 U								0.20 U		0.007 U		
NICKEL		180 J								123 J		86.2 J		
POTASSIUM		2040 J								2590 J		2860 J		
SELENIUM		0.19 U								0.29 U		0.18 U		
SODIUM		16400 J								34400 J		38800 J		
STRONTIUM										32.8 J				
TITANIUM		0.42 U								2.8 U		1.1 U		
VANADIUM		0.63 U								0.05 U		0.22 U		
ZINC		222 J								138 J		84.2 J		
Miscellaneous Parameters (mg/L)														
AMMONIA-N			0.4	0.03 J	0.01	0.005 U	0.005 U	0.005 U	0.02		0.02 J		0.01 U	0.01 U
NITRITE/NITRATE-N			0.02 U	0.84 J	0.86	0.65	0.655	0.66	0.09		0.12 J		0.02 U	0.16
TOTAL ORGANIC CARBON	1.2													
Field Parameters														
ALKALINITY (MG/L)						10 U	10 U	10 U			10 U			
CARBON DIOXIDE (MG/L)						170	175	180			45			
DISSOLVED OXYGEN (MG/L)						0.9	0.9	0.9			5.5			
DISSOLVED OXYGEN - METER (MG/L)			0.81	3.87	0.53	0.84	0.84		2.17		4.61		3.51	34.37
FERROUS IRON (MG/L)						0.06	0.065	0.07			0.33			
HYDROGEN SULFIDE (H2S) (MG/L)						0	0	0			0			

APPENDIX A
POSITIVE HITS TABLE
GROUND WATER - ROUNDS 1 AND 2
SWMU 13 - MINE FILL B
NSWC CRANE, INDIANA

LOCATION	13MWT15	13MWT15	13MWT16	13MWT16	13MWT17	13MWT17	13MWT17	13MWT17	13MWT18	13MWT18	13MWT18	13MWT18	13MWT19	13MWT19
NSAMPLE	13GWT1502-D	13GWT1502-F	13GWT1601	13GWT1602	13GWT1701	13GWT1702	13GWT1702-AVG	13GWT1702-D	13GWT1801	13GWT1801-F	13GWT1802	13GWT1802-F	13GWT1901	13GWT1902
SAMPLE	13FD11250301	13GWT1502-F	13GWT1601	13GWT1602	13GWT1701	13GWT1702	13GWT1702-AVG	13FD11050301	13GWT1801	13GWT1801-F	13GWT1802	13GWT1802-F	13GWT1901	13GWT1902
MATRIX	GW	GF	GW	GW	GW	GW	GW	GW	GW	GF	GW	GF	GW	GW
DEPTH RANGE	---	---	---	---	---	---	---	---	---	---	---	---	---	---
SAMPLE DATE	11/25/2003	11/25/2003	5/6/2003	11/20/2003	5/7/2003	11/5/2003	11/5/2003	11/5/2003	5/6/2003	5/6/2003	12/7/2003	12/7/2003	5/7/2003	10/28/2003
ROUND	01	01	01	02	01	02	02	02	01	01	02	02	01	02
VALIDATED	Y	Y	Y	Y	Y	Y	Y	Y	Y	Y	Y	Y	Y	Y
COLLECTION METHOD	GRAB	GRAB	GRAB	GRAB	GRAB	GRAB	GRAB	GRAB	GRAB	GRAB	GRAB	GRAB	GRAB	GRAB
MANGANESE (MG/L)						0	0	0			1.4			
NITRITE-N (MG/L)						0.006	0.006	0.006			0			
OXIDATION REDUCTION POTENTIAL (MV)			-30.4	237.8	112	338	338		324.1		422.2		224.1	209.6
PH			6.16	6.13	5.35	5.38	5.38		3.88		4.26		5.12	4.87
SPECIFIC CONDUCTANCE (MS/CM)			0.356	0.402	0.17	0.153	0.153		0.514		0.351		1.241	1.21
SULFIDE (MG/L)						0.02	0.01	0			0.07			
TEMPERATURE (C)			14.27	18.83	15.7	15.97	15.97		16.75		9.78		13.81	14.98
TURBIDITY (NTU)			2.7	8.49	10	3.74	3.74		450		40.2		5.0	5.5

APPENDIX A
POSITIVE HITS TABLE
GROUND WATER - ROUNDS 1 AND 2
SWMU 13 - MINE FILL B
NSWC CRANE, INDIANA

LOCATION	13MWT20	13MWT20	13MWT20	13MWT20	13MWT21	13MWT21	13MWT21	13MWT21	13MWT22	13MWT22	13MWT23	13MWT23	13MWT24	13MWT24
NSAMPLE	13GWT2001	13GWT2001-F	13GWT2002	13GWT2003	13GWT2101	13GWT2101-AVG	13GWT2101-D	13GWT2102	13GWT2201	13GWT2202	13GWT2301	13GWT2302	13GWT2401	13GWT2402
SAMPLE	13GWT2001	13GWT2001-F	13GWT2002	13GWT2003	13GWT2101	13GWT2101-AVG	FD04250301	13GWT2102	13GWT2201	13GWT2202	13GWT2301	13GWT2302	13GWT2401	13GWT2402
MATRIX	GW	GF	GW	GW	GW	GW	GW	GW	GW	GW	GW	GW	GW	GW
DEPTH RANGE	---	---	---	---	---	---	---	---	---	---	---	---	---	---
SAMPLE DATE	4/28/2003	4/28/2003	5/9/2003	11/19/2003	4/25/2003	4/25/2003	4/25/2003	11/5/2003	5/6/2003	12/4/2003	5/6/2003	10/28/2003	4/28/2003	10/28/2003
ROUND	01	01	01	02	01	01	01	02	01	02	01	02	01	02
VALIDATED	Y	Y	Y	Y	Y	Y	Y	Y	Y	Y	Y	Y	Y	Y
COLLECTION METHOD	GRAB	GRAB	GRAB	GRAB	GRAB	GRAB	GRAB	GRAB	GRAB	GRAB	GRAB	GRAB	GRAB	GRAB
Volatile Organics (ug/L)														
TRICHLOROETHENE	1 J													
Explosives (ug/L)														
1,3,5-TRINITROBENZENE	0.37 U			0.266 U	0.28 U	0.3125 U	0.345 U	1.3 J	0.395 U	0.266 U	0.5 U	0.26 U	0.65 U	0.24 U
1,3-DINITROBENZENE	0.37 U			0.266 U	0.28 U	0.3125 U	0.345 U	1.8 J	0.395 U	0.266 U	0.5 U	0.26 U	0.65 U	0.24 U
2,4,6-TRINITROTOLUENE	0.37 U			0.266 U	26 J	29.5 J	33 J	69 J	0.395 U	0.266 U	0.5 U	0.26 U	0.65 U	0.24 U
2,4-DIAMINO-6-NITROTOLUENE				0.266 U				0.77 J		0.266 U		0.26 U		0.24 U
2,4-DINITROTOLUENE	0.37 U			0.266 U	0.28 U	0.3125 U	0.345 U	1.4 J	0.395 U	0.266 U	0.5 U	0.26 U	0.65 U	0.24 U
2,6-DIAMINO-4-NITROTOLUENE				0.266 U				0.24 U		0.266 U		0.26 U		0.24 U
2,6-DINITROTOLUENE	0.37 U			0.266 U	0.28 U	0.3125 U	0.345 U	5.8 J	0.395 U	0.266 U	0.5 U	0.26 U	0.65 U	0.24 U
2-AMINO-4,6-DINITROTOLUENE	0.37 U			0.266 U	0.28 U	0.3125 U	0.345 U	0.24 UJ	0.395 U	0.266 U	0.5 U	0.26 U	0.65 U	0.24 U
3-NITROTOLUENE	0.37 U			0.266 U	0.28 U	0.3125 U	0.345 U	0.24 UJ	0.395 U	0.266 U	0.5 U	0.26 U	0.65 U	0.24 U
4-AMINO-2,6-DINITROTOLUENE	0.37 U			0.266 U	0.28 U	0.3125 U	0.345 U	0.24 U	0.395 U	0.266 U	0.5 U	0.26 U	0.65 U	0.24 U
4-NITROTOLUENE	0.37 U			0.266 U	0.5 J	0.33625 J	0.345 U	0.24 UJ	0.395 U	0.266 U	0.5 U	0.26 U	0.65 U	0.24 U
DNX				0.266 U				50 J		0.266 U		0.26 U		0.24 U
HMX	0.37 U			0.266 U	390	370	350	640	19	23	13	14	2.1	2.2
MNX				0.266 U				9.3 J		0.266 U		0.26 U		0.35 J
RDX	0.35 U			0.266 U	2700	2900	3100	7700	20	26	17	21	7.3	9
TNX				0.266 U				1.4 J		0.266 U		0.26 U		0.24 U
Total Inorganics (ug/L)														
ALUMINUM	12900 J			7940 J	354	351.5	349	332 U	709 J	1360 J	192 J	38.2 U	47.3 U	14.2 U
ANTIMONY	0.12 U			0.02 U	0.04 U	0.035 U	0.03 U	0.1 U	0.03 U	0.03 U	0.04 U	0.02 U	0.03 U	0.02 U
ARSENIC	1.8 J			1.1 U	0.18 U	0.17 U	0.16 U	0.32 U	0.30 U	0.40 U	0.41 U	0.09 U	0.07 U	0.14 U
BARIUM	16.7 J			13.3 J	41.7 J	41.1 J	40.5 J	42 J	25.0 J	31.6 J	38.4 J	35 J	22.7 J	18.6 J
BERYLLIUM	5.8 J			5.2 J	0.97 U	0.985 U	1.0 U	1.7 U	3.7 J	3.6 J	0.06 U	0.04 U	0.03 U	0.04 U
CADMIUM	1.0 U			0.76 U	0.14 U	0.125 U	0.11 U	0.08 U	0.40 U	0.49 U	0.13 U	0.1 U	0.05 UJ	0.06 U
CALCIUM	72200 J			65100 J	12000 J	11800 J	11600 J	10600 J	13100 J	12200 J	10300 J	12500 J	34300 J	37900 J
CHROMIUM	3.3 J			1.1 U	0.90 J	0.5575 J	0.43 U	0.46 U	0.44 U	1.7 J	0.55 U	0.35 U	0.37 U	0.27 U
COBALT	234 J			169 J	16.4 J	16.55 J	16.7 J	15.9 J	80.5 J	69.0 J	5.1 J	2.4 J	3.7 J	10.1 J
COPPER	10.5 J			3.1 J	0.83 J	0.875 J	0.92 J	1.1 U	4.8 J	6.4 J	0.35 U	0.2 U	4.0 J	0.19 U
IRON	143000 J			120000 J	127 J	90.75 J	109 U	193 U	434 J	846 J	414 J	118 U	65.7 U	3190 J
LEAD	12.5 J			8.5 J	1.1 J	1.1 J	1.1 J	0.93 U	2.4 J	3.0 J	0.36 U	0.14 U	0.18 U	0.09 U
LITHIUM	340 J				45.8 J	47.5 J	49.2 J		208 J		12.2 J		18.2 J	
MAGNESIUM	70300 J			61400 J	8150 J	8125 J	8100 J	7300 J	11300 J	10000 J	10800 J	10900 J	34500 J	33600 J
MANGANESE	11600 J			9770 J	612 J	620 J	628 J	590 J	381 J	327 J	404 J	256 J	525 J	2010 J
MERCURY	0.02 U			0.007 U	0.02 U	0.02 U	0.02 U	0.02 U	0.20 U	0.14 J	0.20 U	0.02 U	0.02 U	0.02 U
NICKEL	477 J			397 J	35.7 J	35.55 J	35.4 J	32.8 J	153 J	138 J	5.5 J	4.9 J	6.3 J	9.4 J
POTASSIUM	6660 J			5750 J	845 J	846.5 J	848 J	1130 J	705 J	964 J	796 J	875 J	1010 J	1120 J
SELENIUM	0.13 U			0.06 U	0.05 U	0.065 U	0.08 U	0.13 U	0.05 U	0.10 U	0.24 U	0.19 U	0.29 U	0.2 U
SODIUM	53500 J			56600 J	16000 J	16000 J	16000 J	16800 J	15400 J	15500 J	37200 J	34000 J	44200 J	41000 J

APPENDIX A
POSITIVE HITS TABLE
GROUND WATER - ROUNDS 1 AND 2
SWMU 13 - MINE FILL B
NSWC CRANE, INDIANA

LOCATION	13MWT20	13MWT20	13MWT20	13MWT20	13MWT21	13MWT21	13MWT21	13MWT21	13MWT22	13MWT22	13MWT23	13MWT23	13MWT24	13MWT24
NSAMPLE	13GWT2001	13GWT2001-F	13GWT2002	13GWT2003	13GWT2101	13GWT2101-AVG	13GWT2101-D	13GWT2102	13GWT2201	13GWT2202	13GWT2301	13GWT2302	13GWT2401	13GWT2402
SAMPLE	13GWT2001	13GWT2001-F	13GWT2002	13GWT2003	13GWT2101	13GWT2101-AVG	FD04250301	13GWT2102	13GWT2201	13GWT2202	13GWT2301	13GWT2302	13GWT2401	13GWT2402
MATRIX	GW	GF	GW	GW	GW	GW	GW	GW	GW	GW	GW	GW	GW	GW
DEPTH RANGE	---	---	---	---	---	---	---	---	---	---	---	---	---	---
SAMPLE DATE	4/28/2003	4/28/2003	5/9/2003	11/19/2003	4/25/2003	4/25/2003	4/25/2003	11/5/2003	5/6/2003	12/4/2003	5/6/2003	10/28/2003	4/28/2003	10/28/2003
ROUND	01	01	01	02	01	01	01	02	01	02	01	02	01	02
VALIDATED	Y	Y	Y	Y	Y	Y	Y	Y	Y	Y	Y	Y	Y	Y
COLLECTION METHOD	GRAB	GRAB	GRAB	GRAB	GRAB	GRAB	GRAB	GRAB	GRAB	GRAB	GRAB	GRAB	GRAB	GRAB
STRONTIUM	72.0 J				45.6 J	44.85 J	44.1 J		64.9 J		49.9 J		81.0 J	
TITANIUM	5.5 J			0.72 U	4.4 J	4.35 J	4.3 J	0.47 U	5.1 J	9.1 J	6.9 J	0.55 U	2.1 U	0.13 U
VANADIUM	0.63 J			0.45 U	0.20 U	0.18 U	0.16 U	0.22 U	0.18 U	1.4 U	0.51 U	0.08 U	0.06 U	0.06 U
ZINC	661 J			566 J	21.9 J	22.45 J	23.0 J	30 J	278 J	273	4.0 J	4.1 U	8.2 J	3.7 U
Dissolved Inorganics (ug/L)														
ALUMINUM		11800 J												
ANTIMONY		0.03 U												
ARSENIC		1.7 J												
BARIUM		15.6 J												
BERYLLIUM		5.6 J												
CADMIUM		1.0 U												
CALCIUM		70900 J												
CHROMIUM		2.7 J												
COBALT		230 J												
COPPER		10.6 J												
IRON		142000 J												
LEAD		11.5 J												
LITHIUM		322 J												
MAGNESIUM		67900 J												
MANGANESE		11500 J												
MERCURY		0.02 U												
NICKEL		470 J												
POTASSIUM		6520 J												
SELENIUM		0.19 U												
SODIUM		52100 J												
STRONTIUM		68.9 J												
TITANIUM		4.2 J												
VANADIUM		0.45 U												
ZINC		695												
Miscellaneous Parameters (mg/L)														
AMMONIA-N	1.6			1.6 J	0.05	0.045	0.04	0.02	0.01 U	0.01 U	0.01 U	0.01 U	0.02	0.01 U
NITRITE/NITRATE-N	0.07			0.025 U	0.64	0.645	0.65	1.2	0.02 U	0.17 J	0.5	0.51	0.39	0.27
TOTAL ORGANIC CARBON														
Field Parameters														
ALKALINITY (MG/L)				10 U				10 U		10 U		25		90
CARBON DIOXIDE (MG/L)				400				125		50		23		28
DISSOLVED OXYGEN (MG/L)				0.02				1		1		7		0.5
DISSOLVED OXYGEN - METER (MG/L)	0.11		0.54	0.76	1.45	1.45		2.09	0.64	1.65	4.09	2.37	2.89	29.68
FERROUS IRON (MG/L)				3.3 >				0.1		0.37		0.09		3.21
HYDROGEN SULFIDE (H2S) (MG/L)				0				0		0		0		0

APPENDIX A
POSITIVE HITS TABLE
GROUND WATER - ROUNDS 1 AND 2
SWMU 13 - MINE FILL B
NSWC CRANE, INDIANA

LOCATION	13MWT20	13MWT20	13MWT20	13MWT20	13MWT21	13MWT21	13MWT21	13MWT21	13MWT22	13MWT22	13MWT23	13MWT23	13MWT24	13MWT24
NSAMPLE	13GWT2001	13GWT2001-F	13GWT2002	13GWT2003	13GWT2101	13GWT2101-AVG	13GWT2101-D	13GWT2102	13GWT2201	13GWT2202	13GWT2301	13GWT2302	13GWT2401	13GWT2402
SAMPLE	13GWT2001	13GWT2001-F	13GWT2002	13GWT2003	13GWT2101	13GWT2101-AVG	FD04250301	13GWT2102	13GWT2201	13GWT2202	13GWT2301	13GWT2302	13GWT2401	13GWT2402
MATRIX	GW	GF	GW	GW	GW	GW	GW	GW	GW	GW	GW	GW	GW	GW
DEPTH RANGE	---	---	---	---	---	---	---	---	---	---	---	---	---	---
SAMPLE DATE	4/28/2003	4/28/2003	5/9/2003	11/19/2003	4/25/2003	4/25/2003	4/25/2003	11/5/2003	5/6/2003	12/4/2003	5/6/2003	10/28/2003	4/28/2003	10/28/2003
ROUND	01	01	01	02	01	01	01	02	01	02	01	02	01	02
VALIDATED	Y	Y	Y	Y	Y	Y	Y	Y	Y	Y	Y	Y	Y	Y
COLLECTION METHOD	GRAB	GRAB	GRAB	GRAB	GRAB	GRAB	GRAB	GRAB	GRAB	GRAB	GRAB	GRAB	GRAB	GRAB
MANGANESE (MG/L)				8.3				0.6		0.1		0.1		1.8
NITRITE-N (MG/L)				0				0.031		0.005		0.004		0
OXIDATION REDUCTION POTENTIAL (MV)	265		224	376.2	193.6	193.6		247.2	264	351.6	131	397.5	284	59.9
PH	3.48		3.65	3.43	5.46	5.46		5.59	3.95	4.09	5.19	5.5	5.9	6.14
SPECIFIC CONDUCTANCE (MS/CM)	1.504		1.445	1.3	0.212	0.212		0.195	0.245	0.243	0.314	0.309	0.671	0.672
SULFIDE (MG/L)				0.03				0.04		0.06		0.01		0
TEMPERATURE (C)	15.78		16.7	15.9	13.01	13.01		15.17	14.15	11.4	16.46	13.67	16.76	14.27
TURBIDITY (NTU)	19		1.4	6.91	8.2	8.2		2.61	0	1.03	0.7	2.09	5.2	1.66

APPENDIX A
POSITIVE HITS TABLE
GROUND WATER - ROUNDS 1 AND 2
SWMU 13 - MINE FILL B
NSWC CRANE, INDIANA

LOCATION	13MWT25	13MWT25	13MWT25	13MWT25	13MWT26	13MWT26	13MWT27	13MWT28	13MWT28	13MWT29	13MWT30	13MWT31	13MWT32	13MWT33
NSAMPLE	13GWT2501	13GWT2501-F	13GWT2502	13GWT2502-F	13GWT2601	13GWT2602	13GWT2701	13GWT2801	13GWT2801-F	13GWT2901	13GWT3001	13GWT3101	13GWT3201	13GWT3301
SAMPLE	13GWT2501	13GWT2501	13GWT2502	13GWT2502-F	13GWT2601	13GWT2602	13GWT2701	13GWT2801	13GWT2801-F	13GWT2901	13GWT3001	13GWT3101	13GWT3201	13GWT3301
MATRIX	GW	GF	GW	GF	GW	GW	GW	GW	GF	GW	GW	GW	GW	GW
DEPTH RANGE	---	---	---	---	---	---	---	---	---	---	---	---	---	---
SAMPLE DATE	4/26/2003	4/26/2003	11/6/2003	11/19/2003	4/25/2003	11/19/2003	11/25/2003	12/7/2003	12/7/2003	11/7/2003	11/24/2003	11/24/2003	11/19/2003	11/24/2003
ROUND	01	01	02	01	01	02	02	02	02	02	02	02	02	02
VALIDATED	Y	Y	Y	Y	Y	Y	Y	Y	Y	Y	Y	Y	Y	Y
COLLECTION METHOD	GRAB	GRAB	GRAB	GRAB	GRAB	GRAB	GRAB	GRAB	GRAB	GRAB	GRAB	GRAB	GRAB	GRAB
Volatile Organics (ug/L)														
TRICHLOROETHENE														
Explosives (ug/L)														
1,3,5-TRINITROBENZENE	0.145 U		0.25 UJ		0.19 U	0.269 U	0.253 U	0.258 U		0.039 U	0.243 U	0.291 U	0.266 U	0.25 U
1,3-DINITROBENZENE	0.145 U		0.25 U		0.19 U	0.269 U	0.253 U	0.258 U		0.039 U	0.243 U	0.291 U	0.266 U	0.25 U
2,4,6-TRINITROTOLUENE	0.145 U		0.25 UJ		0.19 U	0.269 U	0.253 U	0.258 U		0.039 UJ	0.243 U	0.291 U	0.266 U	0.25 U
2,4-DIAMINO-6-NITROTOLUENE			0.25 U			0.269 U	0.253 U	0.258 U		0.25 U	0.243 U	0.291 U	0.266 U	0.25 U
2,4-DINITROTOLUENE	0.145 U		0.25 UJ		0.19 U	0.269 U	0.253 U	0.258 U		0.039 UJ	0.243 U	0.291 U	0.266 U	0.25 U
2,6-DIAMINO-4-NITROTOLUENE			0.25 U			0.269 U	0.253 U	0.258 U		0.25 U	0.243 U	0.291 U	0.266 U	0.25 U
2,6-DINITROTOLUENE	0.145 U		0.25 UJ		0.19 U	0.269 U	0.253 U	0.258 U		0.039 UJ	0.243 U	0.291 U	0.266 U	0.25 U
2-AMINO-4,6-DINITROTOLUENE	0.145 U		0.25 UJ		0.19 U	0.269 U	0.253 U	0.258 U		0.039 U	0.243 U	0.291 U	0.266 U	0.25 U
3-NITROTOLUENE	0.145 U		0.25 UJ		0.19 U	0.269 U	0.253 U	0.258 U		0.039 UJ	0.243 U	0.291 U	0.266 U	0.25 U
4-AMINO-2,6-DINITROTOLUENE	0.145 U		0.25 U		0.19 U	0.269 U	0.253 U	0.258 U		0.039 U	0.243 U	0.291 U	0.266 U	0.25 U
4-NITROTOLUENE	0.145 U		0.25 UJ		0.19 U	0.269 U	0.253 U	0.258 U		0.039 UJ	0.243 U	0.291 U	0.266 U	0.25 U
DNX			0.25 U			0.269 U	0.253 U	0.258 U		0.25 U	0.243 U	0.291 U	0.266 U	0.25 U
HMX	0.34		0.85		2.4	2.4	15	0.258 U		0.97 J	0.243 U	4.5	0.92	5.3
MNX			0.25 U			0.269 U	0.253 U	0.258 U		0.25 U	0.243 U	0.291 U	0.266 U	0.25 U
RDX	0.4		1.2 J		0.4 J	0.53 J	32	0.258 U		3.8	1.1 J	9.3	2.7 J	4.3
TNX			0.25 U			0.269 U	0.253 U	0.258 U		0.25 U	0.243 U	0.291 U	0.266 U	0.25 U
Total Inorganics (ug/L)														
ALUMINUM	39000 J		73500 J		241	340 J	1980 J	6270 J		781 J	2680 J	79.1 U	168 U	17100 J
ANTIMONY	0.35 U		0.44 U		0.04 U	0.02 U	0.02 U	2.9 J		0.02 U	0.11 U	0.04 U	0.04 U	0.66 U
ARSENIC	15.4 J		14.3 J		0.25 U	0.21 U	3.1 J	15.2 J		0.3 U	1.1 U	0.16 U	0.18 U	4.9 J
BARIUM	303 J		355 J		21.2 J	13.9 J	78.1 J	65.3 J		23.2 J	21.7 J	41.7 J	38.2 J	103 J
BERYLLIUM	2.3 J		3.4 J		0.03 U	0.03 U	2.3 J	0.27 U		1 U	5.9 J	0.06 U	0.03 U	1.4 U
CADMIUM	2.7 J		2.7 J		0.05 U	0.04 U	0.30 U	0.04 U		0.21 U	0.47 U	0.29 U	0.06 U	0.57 U
CALCIUM	117000 J		53900 J		22700 J	27100 J	11100 J	10600 J		26800 J	25700 J	34700 J	31600 J	6020 J
CHROMIUM	64.9 J		89.9 J		0.76 J	0.51 U	3.2 J	11.7 J		4 J	0.86 U	0.36 U	0.34 U	23.8 J
COBALT	33.0 J		48 J		5.0 J	1.7 U	41.1 J	2 J		69.8 J	104 J	18.9 J	2.2 J	13.4 J
COPPER	89.5 J		82.8 J		0.45 U	0.31 U	19.6 J	1.4 U		0.68 U	4.5 J	0.6 U	0.45 U	9.6 J
IRON	36000 J		41000 J		238 J	334 U	17300 J	2460 J		60900 J	36600 J	61.5 U	276 U	16100 J
LEAD	54.3 J		51.3 J		0.15 U	0.14 U	3.3 J	2.5 U		0.39 U	3.8 J	0.07 U	0.24 U	9.4 J
LITHIUM	74.4 J				35.7 J									
MAGNESIUM	19900 J		22700 J		13700 J	14900 J	7520 J	2950 J		18000 J	18800 J	41400 J	20000 J	5930 J
MANGANESE	2080 J		839 J		391 J	271 U	594 J	66.7 J		1320 J	3230 J	3170 J	84.8 J	837 J
MERCURY	0.052 J		0.098 J		0.02 U	0.007 U	0.007 U	0.007 U		0.02 U	0.007 U	0.007 U	0.007 U	0.007 J
NICKEL	82.1 J		120 J		8.0 J	5.9 J	67.4 J	7.1 J		173 J	167 J	93.8 J	7.8 J	29.9 J
POTASSIUM	11000 J		18100 J		474 J	412 J	4170 J	3670 J		3810 J	4150 J	4430 J	885 J	5580 J
SELENIUM	1.8 J		4.1 J		0.09 U	0.04 U	0.04 U	4.1 J		0.04 U	0.12 U	0.14 U	0.51 U	0.53 U
SODIUM	27900 J		31400 J		29200 J	41200 J	14900 J	124000 J		44400 J	38500 J	84800 J	31000 J	11800 J

APPENDIX A
POSITIVE HITS TABLE
GROUND WATER - ROUNDS 1 AND 2
SWMU 13 - MINE FILL B
NSWC CRANE, INDIANA

LOCATION	13MWT25	13MWT25	13MWT25	13MWT25	13MWT26	13MWT26	13MWT27	13MWT28	13MWT28	13MWT29	13MWT30	13MWT31	13MWT32	13MWT33
NSAMPLE	13GWT2501	13GWT2501-F	13GWT2502	13GWT2502-F	13GWT2601	13GWT2602	13GWT2701	13GWT2801	13GWT2801-F	13GWT2901	13GWT3001	13GWT3101	13GWT3201	13GWT3301
SAMPLE	13GWT2501	13GWT2501	13GWT2502	13GWT2502-F	13GWT2601	13GWT2602	13GWT2701	13GWT2801	13GWT2801-F	13GWT2901	13GWT3001	13GWT3101	13GWT3201	13GWT3301
MATRIX	GW	GF	GW	GF	GW	GW	GW	GW	GF	GW	GW	GW	GW	GW
DEPTH RANGE	---	---	---	---	---	---	---	---	---	---	---	---	---	---
SAMPLE DATE	4/26/2003	4/26/2003	11/6/2003	11/19/2003	4/25/2003	11/19/2003	11/25/2003	12/7/2003	12/7/2003	11/7/2003	11/24/2003	11/24/2003	11/19/2003	11/24/2003
ROUND	01	01	02	01	01	02	02	02	02	02	02	02	02	02
VALIDATED	Y	Y	Y	Y	Y	Y	Y	Y	Y	Y	Y	Y	Y	Y
COLLECTION METHOD	GRAB	GRAB	GRAB	GRAB	GRAB	GRAB	GRAB	GRAB	GRAB	GRAB	GRAB	GRAB	GRAB	GRAB
STRONTIUM	262 J				56.9 J									
TITANIUM	285 J		516 J		6.8 J	6.5 J	12.4 J	99 J		21.6 J	0.61 U	0.72 U	1.9 U	150 J
VANADIUM	75.3 J		93.5 J		0.46 U	0.55 U	1.9 J	12.5 J		1 U	0.28 U	0.09 U	0.24 U	25.8 J
ZINC	260 J		340 J		4.7 J	2.8 U	94.9	6.7 J		162 J	280	21.3 J	6.8 U	45.4 J
Dissolved Inorganics (ug/L)														
ALUMINUM		344 J		79.8 U					102 U					
ANTIMONY		0.29 U		0.22 U					3 J					
ARSENIC		0.36 U		0.17 U					13.6 J					
BARIUM		62.6 J		35.9 J					36.9 J					
BERYLLIUM		0.09 U		0.1 U					0.03 U					
CADMIUM		0.47 U		0.74 U					0.04 U					
CALCIUM		64700 J		28600 J					8960 J					
CHROMIUM		0.81 U		0.34 U					0.81 U					
COBALT		2.5 J		30.5 J					0.55 U					
COPPER		2.8 J		1.8 U					1 U					
IRON		198 J		93.6 U					25.5 U					
LEAD		0.44 U		0.14 U					0.2 U					
LITHIUM		57.3 J												
MAGNESIUM		14100 J		9360 J					1800 J					
MANGANESE		460 J		177 J					3.7 U					
MERCURY		0.20 U		0.007 U					0.007 U					
NICKEL		26.3 J		73.9 J					3.1 J					
POTASSIUM		5560 J		2700 J					1880 J					
SELENIUM		2.0 J		2.5 J					3.9 J					
SODIUM		27100 J		29600 J					122000 J					
STRONTIUM		135 J												
TITANIUM		7.3 J		3.6 J					1.4 U					
VANADIUM		0.80 U		0.27 U					2 J					
ZINC		22.8 J		95.5 J					3.5 J					
Miscellaneous Parameters (mg/L)														
AMMONIA-N	0.09		0.05 J		0.02	0.005 UJ	0.39	0.46 J		0.36	0.42	0.005 UJ	0.005 UJ	0.02
NITRITE/NITRATE-N	0.02 U		0.17 J		0.03	0.06 J	0.10 J	0.66 J		0.025 U	0.05 U	0.13 J	0.25 J	1.2 J
TOTAL ORGANIC CARBON														
Field Parameters														
ALKALINITY (MG/L)						60	10 U	150		10 U				
CARBON DIOXIDE (MG/L)						50	45	10 U		150				
DISSOLVED OXYGEN (MG/L)						1.7	5	0.5		0.02				
DISSOLVED OXYGEN - METER (MG/L)	4.21		0.96		4.2	1.7	1.67	0.57		0.44	0.88	5.66	8.98	3.75
FERROUS IRON (MG/L)						0	0.21	0.01		3.3 >				
HYDROGEN SULFIDE (H2S) (MG/L)						0	0	0		0				

APPENDIX A
POSITIVE HITS TABLE
GROUND WATER - ROUNDS 1 AND 2
SWMU 13 - MINE FILL B
NSWC CRANE, INDIANA

LOCATION	13MWT25	13MWT25	13MWT25	13MWT25	13MWT26	13MWT26	13MWT27	13MWT28	13MWT28	13MWT29	13MWT30	13MWT31	13MWT32	13MWT33
NSAMPLE	13GWT2501	13GWT2501-F	13GWT2502	13GWT2502-F	13GWT2601	13GWT2602	13GWT2701	13GWT2801	13GWT2801-F	13GWT2901	13GWT3001	13GWT3101	13GWT3201	13GWT3301
SAMPLE	13GWT2501	13GWT2501	13GWT2502	13GWT2502-F	13GWT2601	13GWT2602	13GWT2701	13GWT2801	13GWT2801-F	13GWT2901	13GWT3001	13GWT3101	13GWT3201	13GWT3301
MATRIX	GW	GF	GW	GF	GW	GW	GW	GW	GF	GW	GW	GW	GW	GW
DEPTH RANGE	---	---	---	---	---	---	---	---	---	---	---	---	---	---
SAMPLE DATE	4/26/2003	4/26/2003	11/6/2003	11/19/2003	4/25/2003	11/19/2003	11/25/2003	12/7/2003	12/7/2003	11/7/2003	11/24/2003	11/24/2003	11/19/2003	11/24/2003
ROUND	01	01	02	01	01	02	02	02	02	02	02	02	02	02
VALIDATED	Y	Y	Y	Y	Y	Y	Y	Y	Y	Y	Y	Y	Y	Y
COLLECTION METHOD	GRAB	GRAB	GRAB	GRAB	GRAB	GRAB	GRAB	GRAB	GRAB	GRAB	GRAB	GRAB	GRAB	GRAB
MANGANESE (MG/L)						0.3	0	0		1.3				
NITRITE-N (MG/L)						0.01	0.001	0.007		0				
OXIDATION REDUCTION POTENTIAL (MV)	219.1		333		189	354	223.2	-34.1		-473	396.6	246.7	223.6	91.7
PH	6.45		5.29		6.05	5.95	4.4	9.15		5.56	3.34	5.67	6.26	5.88
SPECIFIC CONDUCTANCE (MS/CM)	0.511		0.341		0.352	0.333	0.288	0.495		0.589	0.568	0.793	0.386	0.234
SULFIDE (MG/L)						0.05	0	0		0.04				
TEMPERATURE (C)	12.0		16.7		12.01	15.68	14.29	13.59		15.52	9.18	10.09	14.73	8.83
TURBIDITY (NTU)	999 >		39		7.1	9.81	110	260		9.36	7	4.69	3.45	80

APPENDIX A
POSITIVE HITS TABLE
GROUND WATER - ROUNDS 1 AND 2
SWMU 13 - MINE FILL B
NSWC CRANE, INDIANA

LOCATION	13MWT33	13MWT34	13MWT35	13MWT35	13MWT36	13MWT36	13MWT36	13MWT37	13MWT38	13MWT38	13MWT39	13MWT39	13MWT40	13MWT41
NSAMPLE	13GWT3301-F	13GWT3401	13GWT3501	13GWT3501-F	13GWT3601	13GWT3601-AVG	13GWT3601-D	13GWT3701	13GWT3801	13GWT3801-F	13GWT3901	13GWT3901-F	13GWT4001	13GWT4101
SAMPLE	13GWT3301-F	13GWT3401	13GWT3501	13GWT3501-F	13GWT3601	13GWT3601-AVG	13FD12080303	13GWT3701	13GWT3801	13GWT3801-F	13GWT3901	13GWT3901-F	13GWT4001	13GWT4101
MATRIX	GF	GW	GW	GF	GW	GW	GW	GW	GW	GF	GW	GF	GW	GW
DEPTH RANGE	---	---	---	---	---	---	---	---	---	---	---	---	---	---
SAMPLE DATE	11/24/2003	12/4/2003	12/10/2003	12/10/2003	12/8/2003	12/8/2003	12/8/2003	11/6/2003	11/10/2003	11/10/2003	11/7/2003	11/7/2003	11/5/2003	11/23/2003
ROUND	02	02	02	02	02	02	02	02	02	02	02	02	02	02
VALIDATED	Y	Y	Y	Y	Y	Y	Y	Y	Y	Y	Y	Y	Y	Y
COLLECTION METHOD	GRAB	GRAB	GRAB	GRAB	GRAB	GRAB	GRAB	GRAB	GRAB	GRAB	GRAB	GRAB	GRAB	GRAB
Volatile Organics (ug/L)														
TRICHLOROETHENE														
Explosives (ug/L)														
1,3,5-TRINITROBENZENE		0.25 U	0.236 U		0.269 U	0.272 U	0.275 U	0.04 U	0.253 UJ		0.04 U		0.04 U	0.269 UJ
1,3-DINITROBENZENE		0.25 U	0.236 U		0.269 U	0.272 U	0.275 U	0.04 U	0.253 U		0.04 U		0.04 U	0.269 UJ
2,4,6-TRINITROTOLUENE		0.25 U	0.236 U		0.269 U	0.272 U	0.275 U	0.04 UJ	0.253 UJ		0.04 UJ		0.04 UJ	0.269 UJ
2,4-DIAMINO-6-NITROTOLUENE		0.25 U	0.236 U		0.269 U	0.269 U	0.269 U	0.26 U	0.253 U		0.26 U		0.26 U	0.269 U
2,4-DINITROTOLUENE		0.25 U	0.236 U		0.269 U	0.272 U	0.275 U	0.04 UJ	0.253 UJ		0.04 UJ		0.04 UJ	0.269 UJ
2,6-DIAMINO-4-NITROTOLUENE		0.25 U	0.236 U		0.269 U	0.269 U	0.269 U	0.26 U	0.253 U		0.26 U		0.26 U	0.269 U
2,6-DINITROTOLUENE		0.25 U	0.236 U		0.269 U	0.272 U	0.275 U	0.04 UJ	0.253 UJ		0.04 UJ		0.04 UJ	0.269 UJ
2-AMINO-4,6-DINITROTOLUENE		0.25 U	0.236 U		0.269 U	0.272 U	0.275 U	0.04 U	0.253 UJ		0.42 J		0.04 U	0.269 UJ
3-NITROTOLUENE		0.25 U	0.236 U		0.269 U	0.272 U	0.275 U	0.04 UJ	0.253 UJ		0.04 UJ		0.04 UJ	0.269 UJ
4-AMINO-2,6-DINITROTOLUENE		0.29 J	0.236 U		0.269 U	0.272 U	0.275 U	0.04 U	0.253 U		0.56 J		0.52 J	0.269 UJ
4-NITROTOLUENE		0.25 U	0.236 U		0.269 U	0.272 U	0.275 U	0.04 UJ	0.253 UJ		0.04 UJ		0.04 UJ	0.269 UJ
DNX		1	0.236 U		0.269 U	0.269 U	0.269 U	1.5 J	0.253 U		43 J		0.9 J	0.269 U
HMX		29	0.236 U		0.269 U	0.272 U	0.275 U	25	0.253 U		48 J		14	0.269 UJ
MNX		4.5	0.236 U		0.269 U	0.269 U	0.269 U	5.2	0.253 U		7.7		3.3	0.269 U
RDX		460	0.236 U		0.27 J	0.27 J	0.275 U	650	0.253 U		180		140	0.269 UJ
TNX		0.25 U	0.236 U		0.269 UJ	0.269 UJ	0.269 U	0.73	0.253 U		2.4		0.26 U	0.269 U
Total Inorganics (ug/L)														
ALUMINUM		277 J	20900 J		147 U	364.25 J	655 J	140 U	4720 J		2010 J		221 J	29800 J
ANTIMONY		0.02 U	6.7 J		0.09 U	0.695 U	1.3 U	0.02 U	3.8 J		0.02 U		0.09 U	5.6 J
ARSENIC		0.13 U	15 J		0.22 U	0.36 U	0.5 U	0.27 U	24.5 J		1.1 U		0.35 U	20.6 J
BARIUM		17.7 J	94.7 J		30.5 J	31.75 J	33 J	38.8 J	32.2 J		104 J		49.2 J	114 J
BERYLLIUM		0.23 U	1 U		0.09 U	0.695 U	1.3 U	0.05 U	0.3 U		0.12 U		0.09 U	1.2 U
CADMIUM		0.04 U	0.07 U		0.54 U	1.17 U	1.8 U	0.13 U	0.04 U		0.23 U		0.42 U	0.43 U
CALCIUM		14700 J	18000 J		48800 J	49100 J	49400 J	21600 J	5790 J		52200 J		14900 J	18500 J
CHROMIUM		0.55 U	35 J		0.89 U	1.195 U	1.5 U	0.72 U	12.5 J		4.2 J		0.58 U	38.7 J
COBALT		10.3 J	5.6 J		3.7 J	4 J	4.3 J	14.8 U	1.6 U		5.5 J		31.4 J	11.2 J
COPPER		1.7 J	6.1 J		0.88 U	1.09 U	1.3 U	0.83 U	1.6 J		2.1 J		1.3 J	10.9 J
IRON		316 J	10300 J		83.6 U	106.8 U	130 U	1760 J	5410 J		1450 J		272 J	23700 J
LEAD		0.77 U	7.2 J		0.42 U	1.06 U	1.7 U	0.94 U	5.8 J		1.1 U		0.78 U	12 J
LITHIUM														
MAGNESIUM		12300 J	6520 J		45800 J	46600 J	47400 J	14500 J	1040 J		14300 J		11800 J	6520 J
MANGANESE		645 J	118 J		437 J	447.5 J	458 J	834 J	67.4 J		1290 J		855 J	300 U
MERCURY		0.007 U	0.007 U		0.007 U	0.007 U	0.007 U	0.02 U	0.02 U		0.02 U		0.02 U	0.007 U
NICKEL		42.5 J	22 J		56.4 J	59.85 J	63.3 J	12.9 J	5.7 J		25.6 J		26.4 J	34 J
POTASSIUM		2980 J	10100 J		2330 J	2420 J	2510 J	1810 J	5180 J		5110 J		1840 J	7170 J
SELENIUM		0.26 U	1.7 U		0.28 U	0.41 U	0.54 U	0.1 U	2.2 U		0.11 U		0.39 U	5.1 J
SODIUM		34500 J	166000 J		49700 J	50450 J	51200 J	29600 J	71400 J		15800 J		33000 J	86700 J

APPENDIX A
POSITIVE HITS TABLE
GROUND WATER - ROUNDS 1 AND 2
SWMU 13 - MINE FILL B
NSWC CRANE, INDIANA

LOCATION	13MWT33	13MWT34	13MWT35	13MWT35	13MWT36	13MWT36	13MWT36	13MWT37	13MWT38	13MWT38	13MWT39	13MWT39	13MWT40	13MWT41
NSAMPLE	13GWT3301-F	13GWT3401	13GWT3501	13GWT3501-F	13GWT3601	13GWT3601-AVG	13GWT3601-D	13GWT3701	13GWT3801	13GWT3801-F	13GWT3901	13GWT3901-F	13GWT4001	13GWT4101
SAMPLE	13GWT3301-F	13GWT3401	13GWT3501	13GWT3501-F	13GWT3601	13GWT3601-AVG	13FD12080303	13GWT3701	13GWT3801	13GWT3801-F	13GWT3901	13GWT3901-F	13GWT4001	13GWT4101
MATRIX	GF	GW	GW	GF	GW	GW	GW	GW	GW	GF	GW	GF	GW	GW
DEPTH RANGE	---	---	---	---	---	---	---	---	---	---	---	---	---	---
SAMPLE DATE	11/24/2003	12/4/2003	12/10/2003	12/10/2003	12/8/2003	12/8/2003	12/8/2003	11/6/2003	11/10/2003	11/10/2003	11/7/2003	11/7/2003	11/5/2003	11/23/2003
ROUND	02	02	02	02	02	02	02	02	02	02	02	02	02	02
VALIDATED	Y	Y	Y	Y	Y	Y	Y	Y	Y	Y	Y	Y	Y	Y
COLLECTION METHOD	GRAB	GRAB	GRAB	GRAB	GRAB	GRAB	GRAB	GRAB	GRAB	GRAB	GRAB	GRAB	GRAB	GRAB
STRONTIUM														
TITANIUM		2.8 J	104 J		4.2 J	11.4 J	18.6 J	8 J	26.6 J		55.3 J		6.1 J	101 J
VANADIUM		0.30 U	31.6 J		0.23 U	0.715 U	1.2 U	0.4 U	25.6 J		4.1 J		0.42 U	33.9 J
ZINC		28.8 J	30.6 J		31.2 J	33.7 J	36.2 J	16.8 J	11.6 J		14.3 J		14.4 J	77.6 J
Dissolved Inorganics (ug/L)														
ALUMINUM	52.6 U			130 U						285 J		53.1 U		
ANTIMONY	0.41 U			7.3 J						4 J		0.08 U		
ARSENIC	0.87 U			13.1 J						21.3 J		0.31 U		
BARIUM	33.9 J			24 J						9.6 J		93.6 J		
BERYLLIUM	0.30 U			0.03 U						0.03 U		0.03 U		
CADMIUM	0.24 U			0.04 U						0.04 U		0.33 U		
CALCIUM	9670 J			17000 J						3980 J		48000 J		
CHROMIUM	0.73 U			2.3 J						0.8 U		0.17 U		
COBALT	14.7 J			3 J						1.5 U		5.2 J		
COPPER	1.1 U			0.42 U						0.57 U		1.3 U		
IRON	4810 J			32.2 U						85.6 U		447 J		
LEAD	0.34 U			0.07 U						0.12 U		0.06 U		
LITHIUM														
MAGNESIUM	7230 J			3130 J						140 U		13700 J		
MANGANESE	1110 J			9 J						4.2 U		1190 J		
MERCURY	0.007 U			0.007 U						0.02 U		0.02 U		
NICKEL	21.6 J			0.75 U						0.48 U		23.8 J		
POTASSIUM	1460 J			5390 J						4260 J		4540 J		
SELENIUM	0.16 U			2.4 U						2 U		0.16 U		
SODIUM	13000 J			161000 J						65200 J		15500 J		
STRONTIUM														
TITANIUM	1.0 U			1.2 U						1.6 U		1.2 U		
VANADIUM	0.54 U			2.8 J						7 J		0.07 U		
ZINC	22.4 J			4 J						1.7 U		11.3 J		
Miscellaneous Parameters (mg/L)														
AMMONIA-N		0.04	0.56		0.01 U	0.01 U	0.01 U	0.005 U	0.44		0.36		0.11 J	0.18 J
NITRITE/NITRATE-N		0.30 J	0.05 U		0.08	0.07	0.06	0.28	0.11		0.77		0.28	0.025 U
TOTAL ORGANIC CARBON														
Field Parameters														
ALKALINITY (MG/L)		10 U	200		10 U	10 U	10 U		108					
CARBON DIOXIDE (MG/L)		32	10 U		40	40	40		10 U					
DISSOLVED OXYGEN (MG/L)		1	5.5		5.5	5.5	5.5		3.5					
DISSOLVED OXYGEN - METER (MG/L)		2.35	5.28		4.91	4.91		4.82	4.7		5.35		6.28	3.72
FERROUS IRON (MG/L)		0.18	0.02		0.03	0.04	0.05		0					
HYDROGEN SULFIDE (H2S) (MG/L)		0	0		0	0	0		0					

APPENDIX A
POSITIVE HITS TABLE
GROUND WATER - ROUNDS 1 AND 2
SWMU 13 - MINE FILL B
NSWC CRANE, INDIANA

LOCATION	13MWT33	13MWT34	13MWT35	13MWT35	13MWT36	13MWT36	13MWT36	13MWT37	13MWT38	13MWT38	13MWT39	13MWT39	13MWT40	13MWT41
NSAMPLE	13GWT3301-F	13GWT3401	13GWT3501	13GWT3501-F	13GWT3601	13GWT3601-AVG	13GWT3601-D	13GWT3701	13GWT3801	13GWT3801-F	13GWT3901	13GWT3901-F	13GWT4001	13GWT4101
SAMPLE	13GWT3301-F	13GWT3401	13GWT3501	13GWT3501-F	13GWT3601	13GWT3601-AVG	13FD12080303	13GWT3701	13GWT3801	13GWT3801-F	13GWT3901	13GWT3901-F	13GWT4001	13GWT4101
MATRIX	GF	GW	GW	GF	GW	GW	GW	GW	GW	GF	GW	GF	GW	GW
DEPTH RANGE	---	---	---	---	---	---	---	---	---	---	---	---	---	---
SAMPLE DATE	11/24/2003	12/4/2003	12/10/2003	12/10/2003	12/8/2003	12/8/2003	12/8/2003	11/6/2003	11/10/2003	11/10/2003	11/7/2003	11/7/2003	11/5/2003	11/23/2003
ROUND	02	02	02	02	02	02	02	02	02	02	02	02	02	02
VALIDATED	Y	Y	Y	Y	Y	Y	Y	Y	Y	Y	Y	Y	Y	Y
COLLECTION METHOD	GRAB	GRAB	GRAB	GRAB	GRAB	GRAB	GRAB	GRAB	GRAB	GRAB	GRAB	GRAB	GRAB	GRAB
MANGANESE (MG/L)		0.8	0		0.3	0.25	0.2		0.1					
NITRITE-N (MG/L)		0.005	0		0.003	0.0015	0		0					
OXIDATION REDUCTION POTENTIAL (MV)		276	105.2		252.1	252.1		-144.9	10.3		135.1		100.3	170
PH		4.97	9.08		5.68	5.68		5.75	11.39		6.4		5.53	8.36
SPECIFIC CONDUCTANCE (MS/CM)		0.312	0.781		0.721	0.721		0.307	0.332		0.391		0.273	0.394
SULFIDE (MG/L)		0	0.01		0.01	0.01	0.01		0					
TEMPERATURE (C)		10.94	13.6		12.24	12.24		13.32	13.18		13.29		13.28	14.01
TURBIDITY (NTU)		6.07	1000 >		6.06	6.06		3.2	999 >		17.9		6.2	1000 >

APPENDIX A
POSITIVE HITS TABLE
GROUND WATER - ROUNDS 1 AND 2
SWMU 13 - MINE FILL B
NSWC CRANE, INDIANA

LOCATION	13MWT41	13MWT42	13MWT42	13MWT43	13MWT44	13MWT45	13MWT45	13MWT46	13MWT47
NSAMPLE	13GWT4101-F	13GWT4201	13GWT4201-F	13GWT4301	13GWT4401	13GWT4501	13GWT4501-F	13GWT4601	13GWT4701
SAMPLE	13GWT4101-F	13GWT4201	13GWT4201-F	13GWT4301	13GWT4401	13GWT4501	13GWT4501-F	13GWT4601	13GWT4701
MATRIX	GF	GW	GF	GW	GW	GW	GF	GW	GW
DEPTH RANGE	---	---	---	---	---	---	---	---	---
SAMPLE DATE	11/24/2003	11/6/2003	11/6/2003	12/4/2003	12/4/2003	12/8/2003	12/10/2003	12/9/2003	12/9/2003
ROUND	02	02	02	02	02	02	02	02	02
VALIDATED	Y	Y	Y	Y	Y	Y	Y	Y	Y
COLLECTION METHOD	GRAB	GRAB	GRAB	GRAB	GRAB	GRAB	GRAB	GRAB	GRAB
Volatile Organics (ug/L)									
TRICHLOROETHENE									
Explosives (ug/L)									
1,3,5-TRINITROBENZENE		0.04 U		0.24 U	0.255 U	0.258 U		0.278 U	0.26 U
1,3-DINITROBENZENE		0.04 U		0.24 U	0.255 U	0.258 U		0.278 U	0.26 U
2,4,6-TRINITROTOLUENE		0.04 UJ		0.24 U	0.255 U	0.258 U		0.278 U	0.26 U
2,4-DIAMINO-6-NITROTOLUENE		0.26 U		0.24 U	0.255 U	0.258 U		0.278 U	0.26 U
2,4-DINITROTOLUENE		0.04 UJ		0.24 U	0.255 U	0.258 U		0.278 U	0.26 U
2,6-DIAMINO-4-NITROTOLUENE		0.26 U		0.24 U	0.255 U	0.258 U		0.278 U	0.26 U
2,6-DINITROTOLUENE		0.04 UJ		0.24 U	0.255 U	0.258 U		0.278 U	0.26 U
2-AMINO-4,6-DINITROTOLUENE		0.04 U		0.24 U	0.255 U	0.258 U		0.278 U	0.26 U
3-NITROTOLUENE		0.04 UJ		0.24 U	0.255 U	0.34 J		0.278 U	0.26 U
4-AMINO-2,6-DINITROTOLUENE		0.04 U		0.24 U	0.255 U	0.258 U		0.278 U	0.26 U
4-NITROTOLUENE		0.04 UJ		0.24 U	0.255 U	0.258 U		0.278 U	0.26 U
DNX		0.26 U		0.24 U	0.255 U	0.258 U		0.278 U	0.26 U
HMX		64		0.97 J	0.255 U	0.258 U		0.278 U	0.26 U
MNX		0.32 J		0.24 U	0.255 U	0.258 U		0.278 U	0.26 U
RDX		41		0.72 J	0.255 U	0.258 U		0.278 U	0.26 U
TNX		0.26 U		0.24 U	0.255 U	0.258 U		0.278 U	0.26 U
Total Inorganics (ug/L)									
ALUMINUM		24300 J		2500 J	135 J	4300 J		472 J	16500 J
ANTIMONY		0.26 U		0.04 U	0.65 U	0.81 U		0.05 U	0.02 U
ARSENIC		5.8 J		1.9 J	1.4 U	2.1 J		0.5 U	3.2 J
BARIUM		130 J		28.9 J	29.6 J	64.3 J		23.1 J	14.1 J
BERYLLIUM		0.98 U		3.0 J	0.03 U	0.13 U		0.2 U	12.8 J
CADMIUM		0.19 U		1.1 U	0.04 U	0.04 U		0.04 U	1.5 U
CALCIUM		11800 J		21400 J	20200 J	14000 J		67700 J	41500 J
CHROMIUM		39.6 J		0.72 U	0.43 U	5.6 J		0.67 U	1 U
COBALT		17.8 J		65.0 J	0.36 U	0.91 U		2.9 J	194 J
COPPER		10 J		4.3 J	0.25 U	4.8 J		0.42 U	29.9 J
IRON		20000 J		4600 J	168 J	1630 J		2350 J	24300 J
LEAD		8.7 J		1.1 U	1.0 U	1.5 U		0.37 U	13.3 J
LITHIUM									
MAGNESIUM		6730 J		9940 J	6020 J	3510 J		34100 J	37500 J
MANGANESE		2330 J		825 J	58.1 J	120 J		495 J	3960 J
MERCURY		0.02 U		0.007 U	0.007 U	0.007 U		0.007 U	0.29
NICKEL		28.4 J		129 J	1.4 U	3.1 J		6 J	400 J
POTASSIUM		8410 J		2890 J	3630 J	3440 J		3260 J	2570 J
SELENIUM		0.28 U		0.18 U	0.46 U	1.2 U		0.13 U	0.11 U
SODIUM		7420 J		16400 J	145000 J	87500 J		120000 J	63900 J

APPENDIX A
POSITIVE HITS TABLE
GROUND WATER - ROUNDS 1 AND 2
SWMU 13 - MINE FILL B
NSWC CRANE, INDIANA

LOCATION	13MWT41	13MWT42	13MWT42	13MWT43	13MWT44	13MWT45	13MWT45	13MWT46	13MWT47
NSAMPLE	13GWT4101-F	13GWT4201	13GWT4201-F	13GWT4301	13GWT4401	13GWT4501	13GWT4501-F	13GWT4601	13GWT4701
SAMPLE	13GWT4101-F	13GWT4201	13GWT4201-F	13GWT4301	13GWT4401	13GWT4501	13GWT4501-F	13GWT4601	13GWT4701
MATRIX	GF	GW	GF	GW	GW	GW	GF	GW	GW
DEPTH RANGE	---	---	---	---	---	---	---	---	---
SAMPLE DATE	11/24/2003	11/6/2003	11/6/2003	12/4/2003	12/4/2003	12/8/2003	12/10/2003	12/9/2003	12/9/2003
ROUND	02	02	02	02	02	02	02	02	02
VALIDATED	Y	Y	Y	Y	Y	Y	Y	Y	Y
COLLECTION METHOD	GRAB	GRAB	GRAB	GRAB	GRAB	GRAB	GRAB	GRAB	GRAB
STRONTIUM									
TITANIUM		237 J		0.71 U	1.6 U	58.6 J		5.4 J	1 U
VANADIUM		34.4 J		0.41 U	0.33 U	6.7 J		0.58 U	0.12 U
ZINC		32.8 J		250	0.50 J	8.5 J		6.1 J	1070 J
Dissolved Inorganics (ug/L)									
ALUMINUM	95.6 U		73.6 U				103 U		
ANTIMONY	5.6 J		0.32 U				1 U		
ARSENIC	9.4 J		1.6 J				1.4 U		
BARIUM	16.7 J		30.4 J				43.8 J		
BERYLLIUM	0.05 U		0.1 U				0.03 U		
CADMIUM	0.1 U		0.14 U				0.04 U		
CALCIUM	17300 J		12000 J				13500 J		
CHROMIUM	0.34 U		0.36 U				0.61 U		
COBALT	3.9 J		13.2 J				3.1 J		
COPPER	1.1 U		0.69 U				1.3 U		
IRON	47.3 U		112 U				31.5 U		
LEAD	0.33 U		0.17 U				0.15 U		
LITHIUM									
MAGNESIUM	2810 J		4200 J				3160 J		
MANGANESE	30.9 U		2000 J				104 J		
MERCURY	0.007 U		0.02 U				0.007 U		
NICKEL	2.6 J		12.8 J				1.4 U		
POTASSIUM	2960 J		2520 J				2360 J		
SELENIUM	4.2 J		0.76 U				1.6 U		
SODIUM	82100 J		7100 J				91500 J		
STRONTIUM									
TITANIUM	0.9 U		2 U				1.6 U		
VANADIUM	0.68 U		0.23 U				0.68 U		
ZINC	17 J		3.3 J				2.8 J		
Miscellaneous Parameters (mg/L)									
AMMONIA-N		0.16 J		0.11	0.42	0.26		0.12	0.44
NITRITE/NITRATE-N		0.025 U		0.05 U	0.51 J	0.05 U		0.05 U	0.05 U
TOTAL ORGANIC CARBON									
Field Parameters									
ALKALINITY (MG/L)									
CARBON DIOXIDE (MG/L)									
DISSOLVED OXYGEN (MG/L)									
DISSOLVED OXYGEN - METER (MG/L)		1.46		4.37	0.79	0.55		0.99	1.5
FERROUS IRON (MG/L)									
HYDROGEN SULFIDE (H2S) (MG/L)									

APPENDIX A
POSITIVE HITS TABLE
GROUND WATER - ROUNDS 1 AND 2
SWMU 13 - MINE FILL B
NSWC CRANE, INDIANA

LOCATION	13MWT41	13MWT42	13MWT42	13MWT43	13MWT44	13MWT45	13MWT45	13MWT46	13MWT47
NSAMPLE	13GWT4101-F	13GWT4201	13GWT4201-F	13GWT4301	13GWT4401	13GWT4501	13GWT4501-F	13GWT4601	13GWT4701
SAMPLE	13GWT4101-F	13GWT4201	13GWT4201-F	13GWT4301	13GWT4401	13GWT4501	13GWT4501-F	13GWT4601	13GWT4701
MATRIX	GF	GW	GF	GW	GW	GW	GF	GW	GW
DEPTH RANGE	---	---	---	---	---	---	---	---	---
SAMPLE DATE	11/24/2003	11/6/2003	11/6/2003	12/4/2003	12/4/2003	12/8/2003	12/10/2003	12/9/2003	12/9/2003
ROUND	02	02	02	02	02	02	02	02	02
VALIDATED	Y	Y	Y	Y	Y	Y	Y	Y	Y
COLLECTION METHOD	GRAB	GRAB	GRAB	GRAB	GRAB	GRAB	GRAB	GRAB	GRAB
MANGANESE (MG/L)									
NITRITE-N (MG/L)									
OXIDATION REDUCTION POTENTIAL (MV)		105		298.5	-70	55.5		-32.5	409.9
PH		6.39		4.47	7.77	8.19		6.6	3.46
SPECIFIC CONDUCTANCE (MS/CM)		0.19		0.303	0.595	0.357		1.021	1634
SULFIDE (MG/L)									
TEMPERATURE (C)		14.03		12.83	11.37	13.36		12.45	12.42
TURBIDITY (NTU)		1000 >		1.9	4.6	75		8.72	5.4

SWMU 13
SURFACE SOIL

APPENDIX A
POSITIVE HITS TABLE
SURFACE SOIL - ROUNDS 1 AND 2
SWMU 13 - MINE FILL B
NSWC CRANE, INDIANA

LOCATION	13SB01	13SB02	13SB03	13SB04	13SB04	13SB04	13SB05	13SB06	13SB07	13SB08	13SB08	13SB08
NSAMPLE	13SS010002	13SS020002	13SS030002	13SS040002	13SS040002-AVG	13SS040002-D	13SS050002	13SS060002	13SS070002	13SS080002	13SS080002-AVG	13SS080002-D
SAMPLE	13SS010002	13SS020002	13SS030002	13SS040002	13SS040002-AVG	FD03250301	13SS050002	13SS060002	13SS070002	13SS080002	13SS080002-AVG	FD03300301
MATRIX	SS	SS	SS	SS	SS	SS	SS	SS	SS	SS	SS	SS
DEPTH RANGE	0 - 2	0 - 2	0 - 2	0 - 2	0 - 2	0 - 2	0 - 2	0 - 2	0 - 2	0 - 2	0 - 2	0 - 2
SAMPLE DATE	3/25/2003	3/25/2003	3/25/2003	3/25/2003	3/25/2003	3/25/2003	3/25/2003	3/25/2003	3/26/2003	3/30/2003	3/30/2003	3/30/2003
VALIDATED	Y	Y	Y	Y	Y	Y	Y	Y	Y	Y	Y	Y
COLLECTION METHOD	GRAB	GRAB	GRAB	GRAB	GRAB	GRAB	GRAB	GRAB	GRAB	GRAB	GRAB	GRAB
Volatile Organics (ug/kg)												
TRANS-1,2-DICHLOROETHENE								2 J				
TRICHLOROFLUOROMETHANE								2 J				
Semivolatile Organics (ug/kg)												
ACENAPHTHENE	3.9 U	4 U	3.8 U	4.2 U	4.25 U	4.3 U	4.9 U	4.3 U				
ACETOPHENONE	80 U	80 U	78 U	84 U	85.5 U	87 U	99 U	87 U				
ANTHRACENE	3.9 U	4 U	3.8 U	4.2 U	4.25 U	4.3 U	4.9 U	5 J				
BENZO(A)ANTHRACENE	3.9 U	4 U	3.8 U	20	21	22	4.9 U	32				
BENZO(A)PYRENE	3.9 U	4 U	3.8 U	27	30.5	34	4.9 U	42				
BENZO(B)FLUORANTHENE	3.9 U	4 U	3.8 U	37	38.5	40	7 J	58				
BENZO(G,H,I)PERYLENE	3.9 U	4 U	3.8 U	18	25	32	4.9 U	29				
BENZO(K)FLUORANTHENE	3.9 U	4 U	3.8 U	18	21.5	25	5 J	26				
BIS(2-ETHYLHEXYL)PHTHALATE	130 J	91 J	78 U	120 J	125 J	130 J	99 U	140 J				
CHRYSENE	3.9 U	4 U	3.8 U	28	31.5	35	7 J	50				
DIBENZO(A,H)ANTHRACENE	3.9 U	4 U	3.8 U	4.2 U	4.25 U	4.3 U	4.9 U	4.3 U				
FLUORANTHENE	6 J	4 U	3.8 U	34	34.5	35	10	75				
FLUORENE	3.9 U	4 U	3.8 U	4.2 U	4.25 U	4.3 U	4.9 U	4.3 U				
INDENO(1,2,3-CD)PYRENE	3.9 U	4 U	3.8 U	16	19.5	23	4.9 U	26				
NAPHTHALENE	3.9 U	4 U	3.8 U	4.2 U	4.25 U	4.3 U	4.9 U	4.3 U				
PHENANTHRENE	4 J	4 U	3.8 U	15	17	19	5 J	23				
PYRENE	7 J	4 U	3.8 U	45	55	65	10	65				
Pesticide/PCBs (ug/kg)												
AROCLOR-1248	220	210	20 U	46000 J	93000 J	140000 J	5100	1300				
Herbicides (ug/kg)												
PENTACHLOROPHENOL	1.6 R	1.6 R	0.52 U	0.57 U	0.6925 J	1.1 J	0.66 U	0.58 U				
Dioxins/Furans (ng/kg)												
1,2,3,4,6,7,8,9-OCDD	2240	1910	2810	3310	3445	3580	2910	4140				
1,2,3,4,6,7,8,9-OCDF	0.2 U	0.2 U	0.5 U	2 U	2.2 J	3.4 J	1.6 U	4.6 J				
1,2,3,4,6,7,8-HPCDD	9.8	7.9	18	28.4	32.85	37.3	34.3	45.4				
1,2,3,4,6,7,8-HPCDF	0.1 U	0.09 U	0.2 U	0.87 U	1.1675 J	1.9 J	0.68 U	2.1 J				
1,2,3,4,7,8,9-HPCDF	0.1 U	0.1 U	0.3 U	0.7 U	0.5 U	0.3 U	0.7 U	0.7 U				
1,2,3,4,7,8-HXCDD	0.2 U	0.1 U	0.3 U	0.6 U	0.5 J	0.5 J	0.7 U	0.6 J				
1,2,3,4,7,8-HXCDF	0.1 U	0.07 U	0.2 U	1 U	1.05 J	1.6 J	1.2 U	1.8 J				
1,2,3,6,7,8-HXCDD	0.1 U	0.1 U	0.3 U	0.54 U	0.52 J	0.77 J	0.86 U	1 U				
1,2,3,6,7,8-HXCDF	0.09 U	0.07 U	0.2 U	0.3 U	0.33 J	0.51 J	0.4 U	0.39 U				
1,2,3,7,8,9-HXCDD	0.2 U	0.1 U	0.3 U	0.6 U	0.85 J	1.4 J	2 U	1.5 J				
1,2,3,7,8,9-HXCDF	0.1 U	0.09 U	0.2 U	0.4 U	0.3 U	0.2 U	0.5 U	0.4 U				

APPENDIX A
POSITIVE HITS TABLE
SURFACE SOIL - ROUNDS 1 AND 2
SWMU 13 - MINE FILL B
NSWC CRANE, INDIANA

LOCATION	13SB01	13SB02	13SB03	13SB04	13SB04	13SB04	13SB05	13SB06	13SB07	13SB08	13SB08	13SB08
NSAMPLE	13SS010002	13SS020002	13SS030002	13SS040002	13SS040002-AVG	13SS040002-D	13SS050002	13SS060002	13SS070002	13SS080002	13SS080002-AVG	13SS080002-D
SAMPLE	13SS010002	13SS020002	13SS030002	13SS040002	13SS040002-AVG	FD03250301	13SS050002	13SS060002	13SS070002	13SS080002	13SS080002-AVG	FD03300301
MATRIX	SS	SS	SS	SS	SS	SS	SS	SS	SS	SS	SS	SS
DEPTH RANGE	0 - 2	0 - 2	0 - 2	0 - 2	0 - 2	0 - 2	0 - 2	0 - 2	0 - 2	0 - 2	0 - 2	0 - 2
SAMPLE DATE	3/25/2003	3/25/2003	3/25/2003	3/25/2003	3/25/2003	3/25/2003	3/25/2003	3/25/2003	3/26/2003	3/30/2003	3/30/2003	3/30/2003
VALIDATED	Y	Y	Y	Y	Y	Y	Y	Y	Y	Y	Y	Y
COLLECTION METHOD	GRAB	GRAB	GRAB	GRAB	GRAB	GRAB	GRAB	GRAB	GRAB	GRAB	GRAB	GRAB
1,2,3,7,8-PECDD	0.2 U	0.1 U	0.5 U	0.5 U	0.4 U	0.3 U	0.8 U	0.6 U				
1,2,3,7,8-PECDF	0.1 U	0.09 U	0.3 U	0.35 U	0.3125 J	0.45 J	0.4 U	0.3 U				
2,3,4,6,7,8-HXCDF	0.1 U	0.07 U	0.2 U	0.3 U	0.4 J	0.65 J	0.4 U	0.7 J				
2,3,4,7,8-PECDF	0.1 U	0.1 U	0.4 U	5 J	5 J	5	3.7 J	8				
2,3,7,8-TCDD	0.2 U	0.1 U	0.4 U	0.4 U	0.575 J	0.95 J	0.6 U	1.2 U				
2,3,7,8-TCDF	0.64 J	0.46 J	0.3 U	2	2.35	2.7	5	5.8				
TOTAL HPCDD	19.8	16.3	36.9	66	80.7	95.4	78.5	112				
TOTAL HPCDF	0.1 U	0.1 U	0.3 U	1.9 U	2.475	4	1.7 J	4.8 J				
TOTAL HXCDD	1.3 J	1.2 J	1.1 U	5.2 J	8.1 J	11 J	15.7 J	15.1 J				
TOTAL HXCDF	0.1 U	0.07 U	0.2 U	3.9 J	5.3 J	6.7	2.5 J	9.8 J				
TOTAL PECDD	0.2 U	0.1 U	0.5 U	0.5 U	0.4 U	0.3 U	0.8 U	2.8 U				
TOTAL PECDF	0.1 U	0.94 J	0.3 U	48 J	47.15 J	46.3 J	23.1 J	79 J				
TOTAL TCDD	0.2 U	0.1 U	0.4 U	1.8 U	1.9	2.9	0.6 U	2.1 J				
TOTAL TCDF	7 J	15.7 J	1.8	238 J	227 J	216 J	177 J	328 J				
Miscellaneous Parameters												
CATION EXCHANGE CAPACITY (MEQ/100)									14	15	16.5	18
PH									7.4	5.1	5.15	5.2
TOTAL ORGANIC CARBON (MG/KG)									1000 U	1000 U	900	1300

APPENDIX A
POSITIVE HITS TABLE
SURFACE SOIL - ROUNDS 1 AND 2
SWMU 13 - MINE FILL B
NSWC CRANE, INDIANA

LOCATION	13SB09/15	13SB09/15	13SB09/15	13SB10	13SB11	13SB12	13SB13	13SB14	13SB09/15	13SB16	13SB17	13SB18
NSAMPLE	13SS090002	13SS090002-AVG	13SS090002-D	13SS100002	13SS110002	13SS120002	13SS130002	13SS140001	13SS150002	13SS160002	13SS170002	13SS180002
SAMPLE	13SS090002	13SS090002-AVG	FD03260301	13SS100002	13SS110002	13SS120002	13SS130002	13SS140001	13SS150002	13SS160002	13SS170002	13SS180002
MATRIX	SS	SS	SS	SS	SS	SS	SS	SS	SS	SS	SS	SS
DEPTH RANGE	0 - 2	0 - 2	0 - 2	0 - 2	0 - 2	0 - 2	0 - 2	0 - 2	0 - 2	0 - 2	0 - 2	0 - 2
SAMPLE DATE	3/26/2003	3/26/2003	3/26/2003	3/26/2003	3/26/2003	3/26/2003	3/26/2003	4/10/2003	4/10/2003	12/8/2003	12/8/2003	12/8/2003
VALIDATED	Y	Y	Y	Y	Y	Y	Y	Y	Y	Y	Y	Y
COLLECTION METHOD	GRAB	GRAB	GRAB	GRAB	GRAB	GRAB	GRAB	GRAB	GRAB	GRAB	GRAB	GRAB
Volatile Organics (ug/kg)												
TRANS-1,2-DICHLOROETHENE									1.4 U			
TRICHLOROFLUOROMETHANE									3 J			
Semivolatile Organics (ug/kg)												
ACENAPHTHENE	52 J	27.1 J	4.4 UJ	4.1 U	3.9 U	4 U	4 U	4.2 U				
ACETOPHENONE	90 U	97.5 J	150 J	82 U	80 U	82 U	81 U	85 U				
ANTHRACENE	210 J	106.1 J	4.4 UJ	4.1 U	3.9 U	4 U	4 U	4.2 U				
BENZO(A)ANTHRACENE	1100 J	572 J	44 J	7 J	5 J	4 J	4 U	8 J				
BENZO(A)PYRENE	1000 J	535.5 J	71 J	7 J	6 J	4 U	4 U	10				
BENZO(B)FLUORANTHENE	1100 J	596.5 J	93 J	14	9	4 U	4 U	14 J				
BENZO(G,H,I)PERYLENE	750 J	403.5 J	57 J	8 J	6 J	4 U	4 U	9				
BENZO(K)FLUORANTHENE	640 J	357 J	74 J	8 J	5 J	4 U	4 U	10				
BIS(2-ETHYLHEXYL)PHTHALATE	140 J	120 J	100 J	110 J	80 U	130 J	81 U	190 BU				
CHRYSENE	1100 J	588.5 J	77 J	13	10	4 U	4 U	11				
DIBENZO(A,H)ANTHRACENE	200 J	108 J	16 J	4.1 U	3.9 U	4 U	4 U	4.2 U				
FLUORANTHENE	1800 J	911.5 J	23 J	10	6 J	7 J	4 U	9				
FLUORENE	50 J	26.1 J	4.4 UJ	4.1 U	3.9 U	4 U	4 U	4.2 U				
INDENO(1,2,3-CD)PYRENE	650 J	350.5 J	51 J	7 J	4 J	4 U	4 U	7 J				
NAPHTHALENE	4.4 U	4.4 U	4.4 U	5 J	3.9 U	4 U	4 U	4.2 U				
PHENANTHRENE	1000 J	504 J	8 J	5 J	3.9 U	6 J	4 U	4.2 U				
PYRENE	2400 J	1213 J	26 J	10	6 J	7 J	4 U	12				
Pesticide/PCBs (ug/kg)												
AROCLOR-1248	5400 J	6050 J	6700 J	160000	67000 J	330 J	39000 J	150000		50 J	17 U	17 U
Herbicides (ug/kg)												
PENTACHLOROPHENOL	0.6 U	0.6 U	0.6 U	0.55 U	0.54 U	0.55 U	0.54 U	0.57 U				
Dioxins/Furans (ng/kg)												
1,2,3,4,6,7,8,9-OCDD	1570 J	1820 J	2070 J	2270 J	828 J	813 J	2390 J	2340				
1,2,3,4,6,7,8,9-OCDF	1.7 J	1.75 J	1.8 J	1.3 U	0.55 J	0.2 UJ	0.3 UJ	9.5 J				
1,2,3,4,6,7,8-HPCDD	13.6	16	18.4	18.8	6.2	8.1	19.1	22.7				
1,2,3,4,6,7,8-HPCDF	2.3 J	2.35 J	2.4 J	3.1 J	0.18 U	0.1 U	0.57 J	4 U				
1,2,3,4,7,8,9-HPCDF	0.3 U	0.25 U	0.2 U	0.3 U	0.1 U	0.1 U	0.2 U	1.3 J				
1,2,3,4,7,8-HXCDD	0.2 U	0.2 U	0.2 U	0.2 U	0.1 U	0.1 U	0.63 J	0.42 J				
1,2,3,4,7,8-HXCDF	0.46 U	0.48 U	0.5 U	0.41 U	0.33 U	0.08 U	0.51 U	6.4				
1,2,3,6,7,8-HXCDD	0.2 U	0.255 J	0.41 J	0.2 U	0.1 U	0.1 U	0.69 J	0.84 J				
1,2,3,6,7,8-HXCDF	0.3 U	0.2 U	0.1 U	0.1 U	0.07 U	0.08 U	0.41 U	1.6 J				
1,2,3,7,8,9-HXCDD	0.72 J	0.705 J	0.69 J	0.79 J	0.1 U	0.49 U	1.6 J	1.5 J				
1,2,3,7,8,9-HXCDF	0.2 U	0.2 U	0.2 U	0.2 U	0.09 U	0.1 U	0.31 J	0.33 J				

APPENDIX A
POSITIVE HITS TABLE
SURFACE SOIL - ROUNDS 1 AND 2
SWMU 13 - MINE FILL B
NSWC CRANE, INDIANA

LOCATION	13SB09/15	13SB09/15	13SB09/15	13SB10	13SB11	13SB12	13SB13	13SB14	13SB09/15	13SB16	13SB17	13SB18
NSAMPLE	13SS090002	13SS090002-AVG	13SS090002-D	13SS100002	13SS110002	13SS120002	13SS130002	13SS140001	13SS150002	13SS160002	13SS170002	13SS180002
SAMPLE	13SS090002	13SS090002-AVG	FD03260301	13SS100002	13SS110002	13SS120002	13SS130002	13SS140001	13SS150002	13SS160002	13SS170002	13SS180002
MATRIX	SS	SS	SS	SS	SS	SS	SS	SS	SS	SS	SS	SS
DEPTH RANGE	0 - 2	0 - 2	0 - 2	0 - 2	0 - 2	0 - 2	0 - 2	0 - 2	0 - 2	0 - 2	0 - 2	0 - 2
SAMPLE DATE	3/26/2003	3/26/2003	3/26/2003	3/26/2003	3/26/2003	3/26/2003	3/26/2003	4/10/2003	4/10/2003	12/8/2003	12/8/2003	12/8/2003
VALIDATED	Y	Y	Y	Y	Y	Y	Y	Y	Y	Y	Y	Y
COLLECTION METHOD	GRAB	GRAB	GRAB	GRAB	GRAB	GRAB	GRAB	GRAB	GRAB	GRAB	GRAB	GRAB
1,2,3,7,8-PECDD	0.34 U	0.27 U	0.2 U	0.3 U	0.2 U	0.2 U	0.71 J	0.2 U				
1,2,3,7,8-PECDF	0.2 U	0.15 U	0.1 U	0.2 U	0.09 U	0.1 U	0.36 J	2.5 J				
2,3,4,6,7,8-HXCDF	0.21 U	0.155 U	0.1 U	0.21 J	0.07 U	0.07 U	0.42 J	1.8 J				
2,3,4,7,8-PECDF	0.53 U	0.6825 J	1.1 J	1.2 J	1 J	0.1 U	0.47 J	21.8				
2,3,7,8-TCDD	0.52 J	0.3825 J	0.49 U	0.4 U	0.1 U	0.2 U	0.2 U	0.1 U				
2,3,7,8-TCDF	0.35 J	0.725 J	1.1	0.56 J	1.2	0.1 U	0.53 J	21				
TOTAL HPCDD	28	33.2	38.4	36.2	11.8	14.5	36.5	56				
TOTAL HPCDF	3.7	4.15 J	4.6 J	5.3	0.38 J	0.1 U	0.57	10.1 J				
TOTAL HXCDD	3.1	3.65 J	4.2 J	3.8	0.77 J	1.1 J	5	8.4 J				
TOTAL HXCDF	3.1 J	3.25 J	3.4 J	4.1 J	0.33	0.08 U	1.6	19.4 J				
TOTAL PECDD	0.34 U	0.27 U	0.2 U	0.3 U	0.2 U	0.2 U	0.71	2.1 U				
TOTAL PECDF	7.6 J	11.45 J	15.3 J	11.8 J	4.6 J	0.1 U	0.83	135 J				
TOTAL TCDD	0.52	0.52	1.1 U	0.71 U	0.33 U	0.2 U	0.2 U	2.2 U				
TOTAL TCDF	39.9 J	47.65 J	55.4 J	59.4 J	36.1 J	0.1 U	7.8 J	540 J				
Miscellaneous Parameters												
CATION EXCHANGE CAPACITY (MEQ/100)												
PH												
TOTAL ORGANIC CARBON (MG/KG)												

APPENDIX A
POSITIVE HITS TABLE
SURFACE SOIL - ROUNDS 1 AND 2
SWMU 13 - MINE FILL B
NSWC CRANE, INDIANA

LOCATION	13SB19	13SB20	13SB21	13SB22	13SB23	13SB24	13SB25
NSAMPLE	13SS190002	13SS200002	13SS210002	13SS220002	13SS230002	13SS240002	13SS250002
SAMPLE	13SS190002	13SS200002	13SS210002	13SS220002	13SS230002	13SS240002	13SS250002
MATRIX	SS	SS	SS	SS	SS	SS	SS
DEPTH RANGE	0 - 2	0 - 2	0 - 2	0 - 2	0 - 2	0 - 2	0 - 2
SAMPLE DATE	12/8/2003	12/8/2003	12/8/2003	12/8/2003	12/8/2003	12/8/2003	12/8/2003
VALIDATED	Y	Y	Y	Y	Y	Y	Y
COLLECTION METHOD	GRAB	GRAB	GRAB	GRAB	GRAB	GRAB	GRAB
Volatile Organics (ug/kg)							
TRANS-1,2-DICHLOROETHENE							
TRICHLOROFLUOROMETHANE							
Semivolatile Organics (ug/kg)							
ACENAPHTHENE							
ACETOPHENONE							
ANTHRACENE							
BENZO(A)ANTHRACENE							
BENZO(A)PYRENE							
BENZO(B)FLUORANTHENE							
BENZO(G,H,I)PERYLENE							
BENZO(K)FLUORANTHENE							
BIS(2-ETHYLHEXYL)PHTHALATE							
CHRYSENE							
DIBENZO(A,H)ANTHRACENE							
FLUORANTHENE							
FLUORENE							
INDENO(1,2,3-CD)PYRENE							
NAPHTHALENE							
PHENANTHRENE							
PYRENE							
Pesticide/PCBs (ug/kg)							
AROCLOR-1248	6400 J	36000 J	8800 J	2600	630	160 J	17 U
Herbicides (ug/kg)							
PENTACHLOROPHENOL							
Dioxins/Furans (ng/kg)							
1,2,3,4,6,7,8,9-OCDD							
1,2,3,4,6,7,8,9-OCDF							
1,2,3,4,6,7,8-HPCDD							
1,2,3,4,6,7,8-HPCDF							
1,2,3,4,7,8,9-HPCDF							
1,2,3,4,7,8-HXCDD							
1,2,3,4,7,8-HXCDF							
1,2,3,6,7,8-HXCDD							
1,2,3,6,7,8-HXCDF							
1,2,3,7,8,9-HXCDD							
1,2,3,7,8,9-HXCDF							

APPENDIX A
POSITIVE HITS TABLE
SURFACE SOIL - ROUNDS 1 AND 2
SWMU 13 - MINE FILL B
NSWC CRANE, INDIANA

LOCATION	13SB19	13SB20	13SB21	13SB22	13SB23	13SB24	13SB25
NSAMPLE	13SS190002	13SS200002	13SS210002	13SS220002	13SS230002	13SS240002	13SS250002
SAMPLE	13SS190002	13SS200002	13SS210002	13SS220002	13SS230002	13SS240002	13SS250002
MATRIX	SS	SS	SS	SS	SS	SS	SS
DEPTH RANGE	0 - 2	0 - 2	0 - 2	0 - 2	0 - 2	0 - 2	0 - 2
SAMPLE DATE	12/8/2003	12/8/2003	12/8/2003	12/8/2003	12/8/2003	12/8/2003	12/8/2003
VALIDATED	Y	Y	Y	Y	Y	Y	Y
COLLECTION METHOD	GRAB	GRAB	GRAB	GRAB	GRAB	GRAB	GRAB
1,2,3,7,8-PECDD							
1,2,3,7,8-PECDF							
2,3,4,6,7,8-HXCDF							
2,3,4,7,8-PECDF							
2,3,7,8-TCDD							
2,3,7,8-TCDF							
TOTAL HPCDD							
TOTAL HPCDF							
TOTAL HXCDD							
TOTAL HXCDF							
TOTAL PECDD							
TOTAL PECDF							
TOTAL TCDD							
TOTAL TCDF							
Miscellaneous Parameters							
CATION EXCHANGE CAPACITY (MEQ/100)							
PH							
TOTAL ORGANIC CARBON (MG/KG)							

SWMU 13
SUBSURFACE SOIL

APPENDIX A
POSITIVE HITS TABLE
SUBSURFACE SOIL - ROUNDS 1 AND 2
SMWU 13 - MINE FILL B
NSWC CRANE, INDIANA

LOCATION	13SB01	13SB02	13SB03	13SB04	13SB05	13SB06	13SB07	13SB08	13SB09/15	13SB10	13SB11	13SB12	13SB13	13SB09/15
NSAMPLE	13SB010204	13SB020204	13SB030204	13SB040204	13SB050204	13SB060204	13SB070810	13SB080608	13SB090204	13SB100204	13SB110204	13SB120204	13SB130204	13SB150204
SAMPLE	13SB010204	13SB020204	13SB030204	13SB040204	13SB050204	13SB060204	13SB070810	13SB080608	13SB090204	13SB100204	13SB110204	13SB120204	13SB130204	13SB150204
MATRIX	SB	SB	SB	SB	SB	SB	SB	SB	SB	SB	SB	SB	SB	SB
DEPTH RANGE	2 - 4	2 - 4	2 - 4	2 - 4	2 - 4	2 - 4	8 - 10	6 - 8	2 - 4	2 - 4	2 - 4	2 - 4	2 - 4	2 - 4
SAMPLE DATE	3/25/2003	3/25/2003	3/25/2003	3/25/2003	3/25/2003	3/25/2003	3/26/2003	3/30/2003	3/26/2003	3/26/2003	3/26/2003	3/26/2003	3/26/2003	4/11/2003
VALIDATED	Y	Y	Y	Y	Y	Y	Y	Y	Y	Y	Y	Y	Y	Y
COLLECTION METHOD	GRAB	GRAB	GRAB	GRAB	GRAB	GRAB	GRAB	GRAB	GRAB	GRAB	GRAB	GRAB	GRAB	GRAB
Volatile Organics (ug/kg)														
2-BUTANONE						1 U								18
4-METHYL-2-PENTANONE						1 U								3 J
ACETONE						1 UJ								89 BJ
DICHLORODIFLUOROMETHANE						1 U								7 J
TRICHLOROFLUOROMETHANE						2 J								3 J
Semivolatile Organics (ug/kg)														
3&4-METHYLPHENOL	81 U	78 U	79 U	81 U	80 U	87 U			560	77 U	78 U	76 U	83 U	
BIS(2-ETHYLHEXYL)PHTHALATE	110 J	110 J	79 U	120 J	130 J	90 J			76 U	110 J	78 U	76 U	83 U	
CHRYSENE	4 U	4 J	3.9 U	4 U	3.9 U	4.3 U			3.7 U	3.8 U	3.9 U	3.8 U	4.1 U	
FLUORANTHENE	4 U	7 J	3.9 U	4 U	3.9 U	4.3 U			3.7 U	3.8 U	3.9 U	3.8 U	4.1 U	
PHENANTHRENE	4 U	6 J	3.9 U	4 U	3.9 U	4.3 U			3.7 U	3.8 U	3.9 U	3.8 U	4.1 U	
PHENOL	81 U	78 U	79 U	81 U	80 U	87 U			110 J	77 U	78 U	76 U	83 U	
PYRENE	4 U	13	3.9 U	4 U	3.9 U	4.3 U			3.7 U	3.8 U	3.9 U	3.8 U	4.1 U	
Pesticides/PCBs (ug/kg)														
AROCLOR-1248	20 U	20 U	20 U	35000 J	20 U	370 J			190 J	210000	59 J	590 J	220 J	
Herbicides (ug/kg)														
PENTACHLOROPHENOL	0.85 J	0.52 U	0.53 U	0.54 U	0.54 U	0.58 U			0.51 U	0.52 U	0.53 U	0.67 J	0.55 U	
Dioxins/Furans (ng/kg)														
1,2,3,4,6,7,8,9-OCDD	4430	1900	3030	1250	3250	330			923 J	1410 J	3460 J	2720 J	3210 J	
1,2,3,4,6,7,8,9-OCDF	0.2 U	0.2 U	0.3 U	3.4 U	0.6 U	0.7 U			0.4 UJ	2.9 J	0.1 UJ	0.2 UJ	0.3 UJ	
1,2,3,4,6,7,8-HPCDD	26.2	8.5	11.8	7.7	23.2	5			8.1	10.6	25	15.3	17	
1,2,3,4,6,7,8-HPCDF	0.1 U	0.09 U	0.2 U	1.3 U	0.2 U	0.2 U			0.69	1.1 J	0.08 U	0.1 U	0.2 U	
1,2,3,4,7,8-HXCDD	0.2 U	0.1 U	0.2 U	1.5 U	0.2 U	0.2 U			0.2 U	0.2 U	0.09 U	0.1 U	0.44 J	
1,2,3,4,7,8-HXCDF	0.1 U	0.07 U	0.1 U	2.7 J	0.1 U	0.1 U			0.73	1.7 J	0.2 U	0.13 U	0.1 U	
1,2,3,7,8,9-HXCDD	0.67 J	0.69 J	0.2 U	1.5 U	1.2 U	0.3 U			0.5 U	0.53 J	1.1 J	0.1 U	0.96	
1,2,3,7,8-PECDD	0.2 U	0.1 U	0.3 U	1.1 U	0.2 U	0.2 U			0.2 U	0.3 U	0.1 U	0.21 J	0.1 U	
1,2,3,7,8-PECDF	0.2 U	0.09 U	0.2 U	0.7 U	0.2 U	0.1 U			0.31	0.66 U	0.08 U	0.3 J	0.08 U	
2,3,4,6,7,8-HXCDF	0.1 U	0.07 U	0.1 U	0.8 U	0.1 U	0.1 U			0.2 U	0.59 J	0.09 J	0.07 U	0.1 U	
2,3,4,7,8-PECDF	0.2 U	0.1 U	0.2 U	15.4	0.2 U	0.2 U			0.66 U	6.8	0.31 J	0.1 U	0.1 U	
2,3,7,8-TCDF	0.2 U	0.1 U	0.2 U	2.9	0.1 U	0.24 U			0.5 U	5.2	0.2 U	0.09 U	0.1 U	
TOTAL HPCDD	44.2	16.4	25.1	17.4	52.1	8.7			17	21.4	47.3	26.4	44.1	
TOTAL HPCDF	0.2 U	0.1 U	0.2 U	1.4 U	0.2 U	0.2 U			1.5 J	2 J	0.1 U	0.1 U	0.2 U	
TOTAL HXCDD	1.1 J	1.5 J	0.2 U	1.4 U	4.2 J	1.1			2.5 J	1.5 J	4 J	0.65 J	3.4 J	
TOTAL HXCDF	0.1 U	0.07 U	0.1 U	2.7	0.1 U	0.1 U			2.4 J	5.4 J	0.43	0.13 U	0.1 U	
TOTAL PECDD	0.2 U	0.1 U	1.4 U	1.1 U	0.2 U	0.2 U			0.2 U	0.3 U	0.1 U	0.21	0.1 U	
TOTAL PECDF	0.2 U	0.1 U	0.2 U	71.8 J	0.2 U	0.49 U			6.1 J	40.1 J	1.8	0.3	0.09 U	
TOTAL TCDD	0.2 U	0.1 U	0.3 U	5.2 U	0.2 U	0.2 U			0.1 U	3 J	0.15	0.1 U	0.1 U	
TOTAL TCDF	0.2 U	0.1 U	0.94 U	292 J	1.7	1.3 U			24.6 J	211 J	12.8 J	0.09 U	0.1 U	

APPENDIX A
POSITIVE HITS TABLE
SUBSURFACE SOIL - ROUNDS 1 AND 2
SMWU 13 - MINE FILL B
NSWC CRANE, INDIANA

LOCATION	13SB01	13SB02	13SB03	13SB04	13SB05	13SB06	13SB07	13SB08	13SB09/15	13SB10	13SB11	13SB12	13SB13	13SB09/15
NSAMPLE	13SB010204	13SB020204	13SB030204	13SB040204	13SB050204	13SB060204	13SB070810	13SB080608	13SB090204	13SB100204	13SB110204	13SB120204	13SB130204	13SB150204
SAMPLE	13SB010204	13SB020204	13SB030204	13SB040204	13SB050204	13SB060204	13SB070810	13SB080608	13SB090204	13SB100204	13SB110204	13SB120204	13SB130204	13SB150204
MATRIX	SB	SB	SB	SB	SB	SB	SB	SB	SB	SB	SB	SB	SB	SB
DEPTH RANGE	2 - 4	2 - 4	2 - 4	2 - 4	2 - 4	2 - 4	8 - 10	6 - 8	2 - 4	2 - 4	2 - 4	2 - 4	2 - 4	2 - 4
SAMPLE DATE	3/25/2003	3/25/2003	3/25/2003	3/25/2003	3/25/2003	3/25/2003	3/26/2003	3/30/2003	3/26/2003	3/26/2003	3/26/2003	3/26/2003	3/26/2003	4/11/2003
VALIDATED	Y	Y	Y	Y	Y	Y	Y	Y	Y	Y	Y	Y	Y	Y
COLLECTION METHOD	GRAB	GRAB	GRAB	GRAB	GRAB	GRAB	GRAB	GRAB	GRAB	GRAB	GRAB	GRAB	GRAB	GRAB
Miscellaneous Parameters														
CATION EXCHANGE CAPACITY (MEQ/100)							14	13						
PH							5.3	5.8						
TOTAL ORGANIC CARBON (MG/KG)							1100 J	1000 U						

APPENDIX A
POSITIVE HITS TABLE
SUBSURFACE SOIL - ROUNDS 1 AND 2
SMWU 13 - MINE FILL B
NSWC CRANE, INDIANA

LOCATION	13SB16	13SB17	13SB18	13SB18	13SB18	13SB19	13SB21	13SB21	13SB21	13SB22	13SB23	13SB24	13SB25
NSAMPLE	13SB160204	13SB170204	13SB180204	13SB180204-AVG	13SB180204-D	13SB190203	13SB210204	13SB210204-AVG	13SB210204-D	13SB220204	13SB230204	13SB240203	13SB250204
SAMPLE	13SB160204	13SB170204	13SB180204	13SB180204-AVG	13FD12080301	13SB190203	13SB210204	13SB210204-AVG	13FD12080302	13SB220204	13SB230204	13SB240203	13SB250204
MATRIX	SB	SB	SB	SB	SB	SB	SB	SB	SB	SB	SB	SB	SB
DEPTH RANGE	2 - 4	2 - 4	2 - 4	2 - 4	2 - 4	2 - 3	2 - 4	2 - 4	2 - 4	2 - 4	2 - 4	2 - 3	2 - 4
SAMPLE DATE	12/8/2003	12/8/2003	12/8/2003	12/8/2003	12/8/2003	12/8/2003	12/8/2003	12/8/2003	12/8/2003	12/8/2003	12/8/2003	12/8/2003	12/8/2003
VALIDATED	Y	Y	Y	Y	Y	Y	Y	Y	Y	Y	Y	Y	Y
COLLECTION METHOD	GRAB	GRAB	GRAB	GRAB	GRAB	GRAB	GRAB	GRAB	GRAB	GRAB	GRAB	GRAB	GRAB
Volatile Organics (ug/kg)													
2-BUTANONE													
4-METHYL-2-PENTANONE													
ACETONE													
DICHLORODIFLUOROMETHANE													
TRICHLOROFLUOROMETHANE													
Semivolatile Organics (ug/kg)													
3&4-METHYLPHENOL													
BIS(2-ETHYLHEXYL)PHTHALATE													
CHRYSENE													
FLUORANTHENE													
PHENANTHRENE													
PHENOL													
PYRENE													
Pesticides/PCBs (ug/kg)													
AROCLOR-1248	17 U	17 U	17 U	17 U	17 U	28000 J	100 J	67.5 J	35 J	130 J	21 J	24 J	17 U
Herbicides (ug/kg)													
PENTACHLOROPHENOL													
Dioxins/Furans (ng/kg)													
1,2,3,4,6,7,8,9-OCDD													
1,2,3,4,6,7,8,9-OCDF													
1,2,3,4,6,7,8-HPCDD													
1,2,3,4,6,7,8-HPCDF													
1,2,3,4,7,8-HXCDD													
1,2,3,4,7,8-HXCDF													
1,2,3,7,8,9-HXCDD													
1,2,3,7,8-PECDD													
1,2,3,7,8-PECDF													
2,3,4,6,7,8-HXCDF													
2,3,4,7,8-PECDF													
2,3,7,8-TCDF													
TOTAL HPCDD													
TOTAL HPCDF													
TOTAL HXCDD													
TOTAL HXCDF													
TOTAL PECDD													
TOTAL PECDF													
TOTAL TCDD													
TOTAL TCDF													

APPENDIX A
POSITIVE HITS TABLE
SUBSURFACE SOIL - ROUNDS 1 AND 2
SMWU 13 - MINE FILL B
NSWC CRANE, INDIANA

LOCATION	13SB16	13SB17	13SB18	13SB18	13SB18	13SB19	13SB21	13SB21	13SB21	13SB22	13SB23	13SB24	13SB25
NSAMPLE	13SB160204	13SB170204	13SB180204	13SB180204-AVG	13SB180204-D	13SB190203	13SB210204	13SB210204-AVG	13SB210204-D	13SB220204	13SB230204	13SB240203	13SB250204
SAMPLE	13SB160204	13SB170204	13SB180204	13SB180204-AVG	13FD12080301	13SB190203	13SB210204	13SB210204-AVG	13FD12080302	13SB220204	13SB230204	13SB240203	13SB250204
MATRIX	SB	SB	SB	SB	SB	SB	SB	SB	SB	SB	SB	SB	SB
DEPTH RANGE	2 - 4	2 - 4	2 - 4	2 - 4	2 - 4	2 - 3	2 - 4	2 - 4	2 - 4	2 - 4	2 - 4	2 - 3	2 - 4
SAMPLE DATE	12/8/2003	12/8/2003	12/8/2003	12/8/2003	12/8/2003	12/8/2003	12/8/2003	12/8/2003	12/8/2003	12/8/2003	12/8/2003	12/8/2003	12/8/2003
VALIDATED	Y	Y	Y	Y	Y	Y	Y	Y	Y	Y	Y	Y	Y
COLLECTION METHOD	GRAB	GRAB	GRAB	GRAB	GRAB	GRAB	GRAB	GRAB	GRAB	GRAB	GRAB	GRAB	GRAB
Miscellaneous Parameters													
CATION EXCHANGE CAPACITY (MEQ/100)													
PH													
TOTAL ORGANIC CARBON (MG/KG)													

SWMU 13
SEDIMENT

APPENDIX A
POSITIVE HITS TABLE
SEDIMENT - ROUNDS 1 AND 2
SWMU 13 - MINE FILL B
NSWC CRANE, INDIANA

LOCATION	13SW/SD01	13SW/SD02	13SW/SD03	13SW/SD04	13SW/SD05	13SW/SD05	13SW/SD05	13SW/SD06	13SW/SD07	13SW/SD08	13SW/SD09	13SW/SD10	13SD11	13SW/SD12
NSAMPLE	13SD010004	13SD020004	13SD030004	13SD040004	13SD050004	13SD050004-AVG	13SD050004-D	13SD060004	13SD070004	13SD080004	13SD090004	13SD100004	13SD110004	13SD120004
SAMPLE	13SD010004	13SD020004	13SD030004	13SD040004	13SD050004	13SD050004-AVG	FD03290301	13SD060004	13SD070004	13SD080004	13SD090004	13SD100004	13SD110004	13SD120004
MATRIX	SD	SD	SD	SD	SD	SD	SD	SD	SD	SD	SD	SD	SD	SD
DEPTH RANGE	0 - 0.3	0 - 0.3	0 - 0.3	0 - 0.3	0 - 0.3	0 - 0.3	0 - 0.3	0 - 0.3	0 - 0.3	0 - 0.3	0 - 0.3	0 - 0.3	0 - 0.3	0 - 0.3
SAMPLE DATE	3/29/2003	3/29/2003	3/29/2003	3/29/2003	3/29/2003	3/29/2003	3/29/2003	3/29/2003	3/29/2003	3/29/2003	3/29/2003	3/29/2003	3/30/2003	3/30/2003
VALIDATED	Y	Y	Y	Y	Y	Y	Y	Y	Y	Y	Y	Y	Y	Y
COLLECTION METHOD	GRAB	GRAB	GRAB	GRAB	GRAB	GRAB	GRAB	GRAB	GRAB	GRAB	GRAB	GRAB	GRAB	GRAB
Semivolatile Organics (ug/kg)														
2-METHYLNAPHTHALENE				4.1 U	4.3 U	4.3 U		3.9 U						
ACENAPHTHENE				4.1 U	43 J	43 J		24						
ANTHRACENE				4.1 U	88	88		72						
BENZO(A)ANTHRACENE				11	330	330		290 J						
BENZO(A)PYRENE				15	360 J	360 J		390 J						
BENZO(B)FLUORANTHENE				18	420 J	420 J		460 J						
BENZO(G,H,I)PERYLENE				10	270 J	270 J		380 J						
BENZO(K)FLUORANTHENE				10	250 J	250 J		210 J						
CHRYSENE				18	400	400		430 J						
DI-N-BUTYL PHTHALATE				83 U	87 U	87 U		86 J						
DI-N-OCTYL PHTHALATE				83 U	87 U	87 U		100 J						
DIBENZO(A,H)ANTHRACENE				4.1 U	66 J	66 J		74 J						
FLUORANTHENE				44	860	860		830						
FLUORENE				4.1 U	42 J	42 J		33						
INDENO(1,2,3-CD)PYRENE				8 J	220 J	220 J		290 J						
NAPHTHALENE				4.1 U	6 J	6 J		6 J						
PHENANTHRENE				27	570	570		620						
PYRENE				36	1000	1000		1300 J						
Explosives (mg/kg)														
HMX	0.25 U	0.25 U	0.25 U	0.25 U	0.25 U	0.25 U	0.25 U	0.25 U	0.25 U	0.25 U	0.25 U	0.25 U	1.9 J	0.8 J
RDX	0.25 U	0.25 U	0.44 J	0.25 U	0.25 U	0.25 U	0.25 U	0.25 U	0.25 U	0.25 U	0.25 U	0.25 U	2.2	0.25 U
Herbicides (ug/kg)														
PENTACHLOROPHENOL				0.56 U	0.58 U	0.58 U		2.1 J						
AVS/SEM (umo/g)														
ACID VOLATILE SULFIDE		0.49 J			0.88 J	0.865 J	0.85 J			0.62 J			0.25 J	
CADMIUM		0.002 U			0.001 U	0.00225	0.004			0.004			0.002	
COPPER		0.131 J			0.070 J	0.1215 J	0.173 J			2.223 J			0.055 J	
LEAD		0.067 J			0.030 J	0.113 J	0.196 J			0.061 J			0.033 J	
MERCURY		0.00007 J			0.00004 J	0.00011 J	0.00018 J			0.00004 UJ			0.00003 UJ	
NICKEL		0.048			0.111	0.076	0.041			0.028			0.021	
SEM/AVS		1.54			0.70	0.595	0.49			3.74			2.60	
ZINC		0.503 J			0.407 J	0.2775 J	0.296 U			0.426 U			0.538 J	
Inorganics (mg/kg)														
ALUMINUM	9280	8580 J	10900	4250 J	7000 J	5880 J	4760 J	3920 J	4810	5550 J	6430	1480	9260 J	6860
ANTIMONY	1.8 J	0.38 U	0.27 U	0.51 U	0.19 U	0.465 U	0.74 U	0.80 J	0.27 U	0.34 U	0.45 U	0.16 U	0.52 U	0.55 U
ARSENIC	6.5 J	6.5 J	8.2 J	10.7 J	5.7 J	6.05 J	6.4 J	5.7 J	3.7 J	9.1 J	6.1 J	3.7 J	9.4 J	11.7 J

APPENDIX A
POSITIVE HITS TABLE
SEDIMENT - ROUNDS 1 AND 2
SWMU 13 - MINE FILL B
NSWC CRANE, INDIANA

LOCATION	13SW/SD01	13SW/SD02	13SW/SD03	13SW/SD04	13SW/SD05	13SW/SD05	13SW/SD05	13SW/SD06	13SW/SD07	13SW/SD08	13SW/SD09	13SW/SD10	13SD11	13SW/SD12
NSAMPLE	13SD010004	13SD020004	13SD030004	13SD040004	13SD050004	13SD050004-AVG	13SD050004-D	13SD060004	13SD070004	13SD080004	13SD090004	13SD100004	13SD110004	13SD120004
SAMPLE	13SD010004	13SD020004	13SD030004	13SD040004	13SD050004	13SD050004-AVG	FD03290301	13SD060004	13SD070004	13SD080004	13SD090004	13SD100004	13SD110004	13SD120004
MATRIX	SD	SD	SD	SD	SD	SD	SD	SD	SD	SD	SD	SD	SD	SD
DEPTH RANGE	0 - 0.3	0 - 0.3	0 - 0.3	0 - 0.3	0 - 0.3	0 - 0.3	0 - 0.3	0 - 0.3	0 - 0.3	0 - 0.3	0 - 0.3	0 - 0.3	0 - 0.3	0 - 0.3
SAMPLE DATE	3/29/2003	3/29/2003	3/29/2003	3/29/2003	3/29/2003	3/29/2003	3/29/2003	3/29/2003	3/29/2003	3/29/2003	3/29/2003	3/29/2003	3/30/2003	3/30/2003
VALIDATED	Y	Y	Y	Y	Y	Y	Y	Y	Y	Y	Y	Y	Y	Y
COLLECTION METHOD	GRAB	GRAB	GRAB	GRAB	GRAB	GRAB	GRAB	GRAB	GRAB	GRAB	GRAB	GRAB	GRAB	GRAB
BARIUM	364 J	79.7 J	97.4 J	34.4 J	61.4 J	68.9 J	76.4 J	45.1 J	28.5 J	62.5 J	49.6 J	104 J	67.6 J	257 J
BERYLLIUM	0.52 U	0.79 J	0.67 J	1.3 J	0.63 J	0.41 J	0.38 U	0.37 U	0.18 U	0.71 J	0.74 J	0.88 J	0.63 J	1.0 J
CADMIUM	3.5 J	0.55 J	0.45 U	0.36 U	0.35 U	0.4125 J	0.65 J	0.41 J	0.66 J	0.62 J	0.43 J	0.36 U	0.91 J	0.81 J
CALCIUM	38500 J	2140 J	2020 J	1120 J	1490 J	58745 J	116000 J	71000 J	45700 J	14800 J	6720 J	977 J	33200 J	35400 J
CHROMIUM	156 J	12.1 J	15.2 J	18.0 J	9.0 J	13.5 J	18.0 J	11.6 J	9.2 J	14.8 J	12.4 J	7.9 J	15.4 J	32.7 J
COBALT	8.1 J	10.9 J	18.5 J	9.3 J	15.9 J	12.75 J	9.6 J	10.0 J	3.5 J	8.2 J	11.7 J	10.3 J	6.8 J	20.6 J
COPPER	52.1 J	13.9 J	11.7 J	13.7 J	10.6 J	14 J	17.4 J	12.7 J	16.6 J	19.2 J	11.9 J	7.0 J	12.5 J	10.7 J
IRON	21300 J	16700 J	22200 J	46100 J	20800 J	18200 J	15600 J	17500 J	9900 J	26100 J	34800 J	1990 J	25900 J	46300 J
LEAD	471 J	18.6 J	21.4 J	15.0 J	11.7 J	38.3 J	64.9 J	23.9 J	31.4 J	17.0 J	17.6 J	11.0 J	20.0 J	21.4 J
LITHIUM	8.1 J	7.8 J	8.2 J	2.1 J	6.4 J	5.95 J	5.5 J	4.1 J	4.3 J	3.6 J	7.3 J	10.1 J	7.2 J	6.5 J
MAGNESIUM	3830 J	969 J	1200 J	292 J	908 J	4199 J	7490 J	4810 J	7540 J	2120 J	2450 J	983 J	2080 J	1450 J
MANGANESE	204 J	641 J	1580 J	302 J	747 J	658.5 J	570 J	773 J	147 J	591 J	284 J	67.5 J	372 J	6130 J
MERCURY	0.16 J	0.044 U	0.037 J	0.010 U	0.024 U	0.023 U	0.022 U	0.015 U	0.015 J	0.036 U	0.013 J	0.029 J	0.028 U	0.032 J
NICKEL	16.1 J	11.3 J	12.8 J	13.5 J	13.5 J	13.55 J	13.6 J	10.4 J	7.9 J	12.0 J	13.5 J	19.3 J	8.6 J	14.9 J
POTASSIUM	614 J	394 J	561 J	417 J	319 J	311 J	303 J	252 J	317 J	451 J	413 J	442 J	2260 J	1130 J
SELENIUM	0.56 J	0.51 J	0.55 J	0.11 U	0.27 U	0.265 U	0.26 U	0.16 U	0.18 J	0.33 U	0.21 J	0.30 J	0.29 U	0.30 J
SODIUM	41.9 U	75.9 U	126 U	25.2 U	29.7 U	70.425 J	126 J	81.3 J	334 J	71.4 U	22.6 U	25.8 U	113 J	47.1 U
STRONTIUM	39.9 J	7.3 J	6.5 J	4.5 J	5.5 J	63.75 J	122 J	70.2 J	52.5 J	18.1 J	8.5 J	5.5 J	77.1 J	28.2 J
TIN	11.4 J	0.64 U	0.57 U	0.31 U	0.49 U	0.48 U	0.47 U	0.40 U	0.52 J	0.61 U	2.0 J	0.45 U	0.53 U	12.0 J
TITANIUM	68.1 J	93.1 J	92.4 J	27.4 J	91.5 J	88 J	84.5 J	67.2 J	78.2 J	52.0 J	42.8 J	68.6 J	62.7 J	60.2 J
VANADIUM	23.3 J	21.5 J	28.2 J	24.8 J	17.4 J	18.05 J	18.7 J	13.9 J	11.8 J	18.7 J	20.5 J	15.5 J	23.0 J	39.1 J
ZINC	541 J	67.8 J	41.4 J	40.0 J	97.2 J	75.05 J	52.9 J	43.1 J	58.1 J	78.0 J	386 U	37.7 J	116 J	138 U
Miscelaneous Parameters														
CATION EXCHANGE CAPACITY (MEQ/100)		15			9.9	9.95	10			12			18	
PH		7.2			5	6.3	7.6			7.4			7.9	
TOTAL ORGANIC CARBON (MG/KG)		15000 J			19000 J	11100 J	3200 J			4400 J			2600 J	

APPENDIX A
POSITIVE HITS TABLE
SEDIMENT - ROUNDS 1 AND 2
SWMU 13 - MINE FILL B
NSWC CRANE, INDIANA

LOCATION	13SW/SD14	13SW/SD14	13SW/SD15	13SW/SD16	13SD17	13SD17	13SD17	13SW/SD18	13SW/SD19	13SW/SD20	13SD21	13SW/SD22	13SD23	13SW/SD24
NSAMPLE	13SD130004	13SD140004	13SD150004	13SD160004	13SD170004	13SD170004-AVG	13SD170004-D	13SD180004	13SD190004	13SD200004	13SD210004	13SD220004	13SD230004	13SD240004
SAMPLE	13SD130004	13SD140004	13SD150004	13SD160004	13SD170004	13SD170004-AVG	FD03290302	13SD180004	13SD190004	13SD200004	13SD210004	13SD220004	13SD230004	13SD240004
MATRIX	SD	SD	SD	SD	SD	SD	SD	SD	SD	SD	SD	SD	SD	SD
DEPTH RANGE	0 - 0.3	0 - 0.3	0 - 0.3	0 - 0.3	0 - 0.3	0 - 0.3	0 - 0.3	0 - 0.3	0 - 0.3	0 - 0.3	0 - 0.3	0 - 0.3	0 - 0.3	0 - 0.3
SAMPLE DATE	3/30/2003	3/30/2003	3/30/2003	3/30/2003	3/29/2003	3/29/2003	3/29/2003	3/29/2003	3/30/2003	3/30/2003	3/30/2003	3/29/2003	3/29/2003	10/23/2003
VALIDATED	Y	Y	Y	Y	Y	Y	Y	Y	Y	Y	Y	Y	Y	Y
COLLECTION METHOD	GRAB	GRAB	GRAB	GRAB	GRAB	GRAB	GRAB	GRAB	GRAB	GRAB	GRAB	GRAB	GRAB	GRAB
Semivolatile Organics (ug/kg)														
2-METHYLNAPHTHALENE														
ACENAPHTHENE														
ANTHRACENE														
BENZO(A)ANTHRACENE														
BENZO(A)PYRENE														
BENZO(B)FLUORANTHENE														
BENZO(G,H,I)PERYLENE														
BENZO(K)FLUORANTHENE														
CHRYSENE														
DI-N-BUTYL PHTHALATE														
DI-N-OCTYL PHTHALATE														
DIBENZO(A,H)ANTHRACENE														
FLUORANTHENE														
FLUORENE														
INDENO(1,2,3-CD)PYRENE														
NAPHTHALENE														
PHENANTHRENE														
PYRENE														
Explosives (mg/kg)														
HMX	0.25 U	0.25 U	0.25 U	0.25 U	0.25 U	0.25 U	0.25 U	0.25 U	0.25 U	0.25 U	0.25 U	0.25 U	0.25 U	0.25 U
RDX	0.25 U	0.25 U	0.71 J	0.25 U	0.25 U	0.25 U	0.25 U	0.25 U	0.25 U	0.25 U	0.25 U	0.25 U	0.25 U	0.25 U
Herbicides (ug/kg)														
PENTACHLOROPHENOL														
AVS/SEM (umo/g)														
ACID VOLATILE SULFIDE		0.66 J			0.67 J	0.67 J				0.23 J				
CADMIUM		0.0014 U			0.001 U	0.001 U				0.001 U				
COPPER		0.036 J			0.061 J	0.061 J				0.075 J				
LEAD		0.006 U			0.035 J	0.035 J				0.047 J				
MERCURY		0.00054 J			0.00005 J	0.00005 J				0.00009 J				
NICKEL		0.022			0.020	0.02				0.078				
SEM/AVS		0.09			0.17	0.17				0.87				
ZINC		0.031 U			0.285 U	0.285 U				0.113 U				
Inorganics (mg/kg)														
ALUMINUM	5010	4160 J	10300	9140	10200 J	10000 J	9800	7650	16200	7090 J	6600	18500	11900	14100 J
ANTIMONY	0.47 U	0.13 U	0.26 U	0.25 U	0.24 U	0.225 U	0.21 U	0.35 U	0.23 U	0.23 U	0.29 U	1.2 J	0.48 U	2.3 J
ARSENIC	17.5 J	0.53 U	16.9 J	11.4 J	6.2 J	6.6 J	7.0 J	8.2 J	7.5 J	11.0 J	8.0 J	35.6 J	10.2 J	58.2 J

APPENDIX A
POSITIVE HITS TABLE
SEDIMENT - ROUNDS 1 AND 2
SWMU 13 - MINE FILL B
NSWC CRANE, INDIANA

LOCATION	13SW/SD14	13SW/SD14	13SW/SD15	13SW/SD16	13SD17	13SD17	13SD17	13SW/SD18	13SW/SD19	13SW/SD20	13SD21	13SW/SD22	13SD23	13SW/SD24
NSAMPLE	13SD130004	13SD140004	13SD150004	13SD160004	13SD170004	13SD170004-AVG	13SD170004-D	13SD180004	13SD190004	13SD200004	13SD210004	13SD220004	13SD230004	13SD240004
SAMPLE	13SD130004	13SD140004	13SD150004	13SD160004	13SD170004	13SD170004-AVG	FD03290302	13SD180004	13SD190004	13SD200004	13SD210004	13SD220004	13SD230004	13SD240004
MATRIX	SD	SD	SD	SD	SD	SD	SD	SD	SD	SD	SD	SD	SD	SD
DEPTH RANGE	0 - 0.3	0 - 0.3	0 - 0.3	0 - 0.3	0 - 0.3	0 - 0.3	0 - 0.3	0 - 0.3	0 - 0.3	0 - 0.3	0 - 0.3	0 - 0.3	0 - 0.3	0 - 0.3
SAMPLE DATE	3/30/2003	3/30/2003	3/30/2003	3/30/2003	3/29/2003	3/29/2003	3/29/2003	3/29/2003	3/30/2003	3/30/2003	3/30/2003	3/29/2003	3/29/2003	10/23/2003
VALIDATED	Y	Y	Y	Y	Y	Y	Y	Y	Y	Y	Y	Y	Y	Y
COLLECTION METHOD	GRAB	GRAB	GRAB	GRAB	GRAB	GRAB	GRAB	GRAB	GRAB	GRAB	GRAB	GRAB	GRAB	GRAB
BARIUM	152 J	148 J	65.4 J	113 J	94.1 J	101.55 J	109 J	79.5 J	102 J	77.9 J	102 J	203 J	165 J	101 J
BERYLLIUM	0.96 J	0.53 J	1.4 J	1.4 J	0.70 J	0.745 J	0.79 J	0.93 J	1.6 J	0.95 J	0.77 J	4.3 J	0.95 J	2.9 J
CADMIUM	4.1 J	0.17 U	0.25 U	0.37 U	0.38 U	0.345 J	0.50 J	0.39 U	0.45 U	0.46 J	0.52 J	1.8 J	0.82 J	1.1 J
CALCIUM	89700 J	998 J	1650 J	767 J	6640 J	5430 J	4220 J	1050 J	2440 J	1360 J	1560 J	2310 J	3400 J	766 J
CHROMIUM	49.6 J	16.2 J	24.9 J	21.5 J	11.3 J	13.7 J	16.1 J	24.9 J	13.5 J	36.5 J	10.3 J	140 J	12.7 J	228 J
COBALT	20.0 J	1.8 J	15.0 J	18.9 J	11.8 J	12.5 J	13.2 J	17.9 J	107 J	18.2 J	16.0 J	70.2 J	28.5 J	24.2 J
COPPER	11.3 J	8.9 J	24.1 J	13.6 J	11.5 J	13.2 J	14.9 J	11.8 J	12.2 J	14.9 J	13.2 J	32.4 J	17.8 J	21.6 J
IRON	83600 J	18400 J	25900 J	26900 J	18300 J	21550 J	24800 J	24900 J	33100 J	36500 J	14900 J	171000 J	19900 J	195000 J
LEAD	38.1 J	4.2 J	14.8 J	20.5 J	13.7 J	14.6 J	15.5 J	19.2 J	20.1 J	20.7 J	19.2 J	87.7 J	34.8 J	54.8 J
LITHIUM	4.0 J	4.3 J	28.4 J	17.5 J	7.7 J	7.7 J	7.7 J	6.1 J	38.8 J	9.7 J	5.3 J	10.9 J	9.2 J	
MAGNESIUM	5620 J	757 J	1840 J	1410 J	1990 J	1820 J	1650 J	943 J	1050 J	717 J	825 J	1110 J	1290 J	457 J
MANGANESE	1760 J	65.3 J	247 J	1790 J	724 J	779 J	834 J	1290 J	2960 J	819 J	1440 J	4580 J	4220 J	2220 J
MERCURY	0.019 J	0.010 U	0.022 J	0.041 J	0.028 U	0.022 J	0.022 J	0.028 J	0.036 J	0.029 U	0.030 J	0.031 J	0.042 J	0.044 J
NICKEL	13.6 J	8.6 J	35.5 J	33.0 J	12.8 J	13.9 J	15.0 J	13.0 J	45.5 J	18.6 J	11.7 J	83.9 J	19.3 J	28.1 J
POTASSIUM	538 J	1660 J	2390 J	807 J	523 J	543 J	563 J	392 J	599 J	482 J	367 J	482 J	629 J	622 J
SELENIUM	0.22 J	0.02 U	0.34 J	0.51 J	0.27 U	0.2475 J	0.36 J	0.43 J	0.54 J	0.45 J	0.38 J	0.69 J	0.45 J	1.1 J
SODIUM	39.0 U	38.8 U	53.5 U	26.2 U	30.7 U	29.85 U	29.0 U	43.8 U	63.6 U	48.3 U	62.5 U	58.2 U	26.3 U	28.1 U
STRONTIUM	64.2 J	10.3 J	10.1 J	6.3 J	11.0 J	9.3 J	7.6 J	4.1 J	7.4 J	6.4 J	5.2 J	8.6 J	8.5 J	
TIN	0.46 U	0.75 J	0.66 J	0.50 U	0.52 U	0.51 J	0.51 J	0.46 U	0.46 U	0.40 U	0.42 U	0.82 J	0.82 J	0.38 U
TITANIUM	67.9 J	72.0 J	13.8 J	45.1 J	110 J	95.7 J	81.4 J	72.3 J	67.0 J	66.6 J	77.4 J	112 J	62.3 J	164 J
VANADIUM	44.0 J	16.2 J	17.6 J	21.7 J	21.9 J	23.45 J	25.0 J	26.1 J	21.5 J	26.2 J	19.7 J	115 J	24.6 J	144 J
ZINC	216 U	7.9 J	65.3 J	46.3 J	62.0 J	69.55 J	77.1 J	31.7 J	75.9 J	40.4 J	33.4 U	273 U	64.5 J	68.4 J
Miscelaneous Parameters														
CATION EXCHANGE CAPACITY (MEQ/100)		13			16	16				12				
PH		7.1			7.8	7.8				7.2				
TOTAL ORGANIC CARBON (MG/KG)		2500 J			17000 J	17000 J				2600 J				

APPENDIX A
POSITIVE HITS TABLE
SEDIMENT - ROUNDS 1 AND 2
SWMU 13 - MINE FILL B
NSWC CRANE, INDIANA

LOCATION	13SW/SD25	13SW/SD26	13SW/SD27	13SW/SD28	13SW/SD29	13SW/SD29	13SW/SD29	13SW/SD30	13SW/SD31	13SW/SD32	13SW/SD32	13SW/SD32
NSAMPLE	13SD250004	13SD260004	13SD270004	13SD280004	13SD290004	13SD290004-AVG	13SD290004-D	13SD300004	13SD310004	13SD320004	13SD320004-AVG	13SD320004-D
SAMPLE	13SD250004	13SD260004	13SD270004	13SD280004	13SD290004	13SD290004-AVG	13FD10220302	13SD300004	13SD310004	13SD320004	13SD320004-AVG	13FD10240301
MATRIX	SD	SD	SD	SD	SD	SD	SD	SD	SD	SD	SD	SD
DEPTH RANGE	0 - 0.3	0 - 0.3	0 - 0.3	0 - 0.3	0 - 0.3	0 - 0.3	0 - 0.3	0 - 0.3	0 - 0.3	0 - 0.3	0 - 0.3	0 - 0.3
SAMPLE DATE	10/23/2003	10/23/2003	10/23/2003	10/22/2003	10/22/2003	10/22/2003	10/22/2003	10/22/2003	10/22/2003	10/24/2003	10/24/2003	10/24/2003
VALIDATED	Y	Y	Y	Y	Y	Y	Y	Y	Y	Y	Y	Y
COLLECTION METHOD	GRAB	GRAB	GRAB	GRAB	GRAB	GRAB	GRAB	GRAB	GRAB	GRAB	GRAB	GRAB
Semivolatile Organics (ug/kg)												
2-METHYLNAPHTHALENE	6 J									4.4 U	4.45 U	4.5 U
ACENAPHTHENE	4.3 U									4.4 U	4.45 U	4.5 U
ANTHRACENE	4.3 U									4.4 U	4.45 U	4.5 U
BENZO(A)ANTHRACENE	10									19	22	25
BENZO(A)PYRENE	12									23	28.5	34
BENZO(B)FLUORANTHENE	21									32	38	44
BENZO(G,H,I)PERYLENE	12									19	23	27
BENZO(K)FLUORANTHENE	7 J									10 J	14 J	18 J
CHRYSENE	15									24	31.5	39
DI-N-BUTYL PHTHALATE												
DI-N-OCTYL PHTHALATE												
DIBENZO(A,H)ANTHRACENE	4.3 U									4.4 U	4.45 U	4.5 U
FLUORANTHENE	29									54	63	72
FLUORENE	4.3 U									4.4 U	4.45 U	4.5 U
INDENO(1,2,3-CD)PYRENE	9									16	18	20
NAPHTHALENE	4.3 U									4.4 U	4.45 U	4.5 U
PHENANTHRENE	17									24	26.5	29
PYRENE	25									47	59	71
Explosives (mg/kg)												
HMX	0.25 U	0.25 U	0.25 U	0.25 U	0.25 U	0.25 U	0.25 U	0.25 U	0.28 J			
RDX	0.25 U	0.25 U	0.25 U	0.25 U	0.25 U	0.25 U	0.25 U	0.25 U	0.25 U			
Herbicides (ug/kg)												
PENTACHLOROPHENOL												
AVS/SEM (umo/g)												
ACID VOLATILE SULFIDE												
CADMIUM												
COPPER												
LEAD												
MERCURY												
NICKEL												
SEM/AVS												
ZINC												
Inorganics (mg/kg)												
ALUMINUM	13900 J	12500 J	8820 J	13400 J	10300 J	11500 J	12700 J	11600 J	14400 J			
ANTIMONY	1.6 J	1.3 J	0.97 J	1.1 J	0.89 J	1.095 J	1.3 J	4.7 J	2.1 J			
ARSENIC	33.8 J	32.1 J	37.6 J	22.2 J	25.9 J	33.25 J	40.6 J	56.9 J	25.6 J			

APPENDIX A
POSITIVE HITS TABLE
SEDIMENT - ROUNDS 1 AND 2
SWMU 13 - MINE FILL B
NSWC CRANE, INDIANA

LOCATION	13SW/SD25	13SW/SD26	13SW/SD27	13SW/SD28	13SW/SD29	13SW/SD29	13SW/SD29	13SW/SD30	13SW/SD31	13SW/SD32	13SW/SD32	13SW/SD32
NSAMPLE	13SD250004	13SD260004	13SD270004	13SD280004	13SD290004	13SD290004-AVG	13SD290004-D	13SD300004	13SD310004	13SD320004	13SD320004-AVG	13SD320004-D
SAMPLE	13SD250004	13SD260004	13SD270004	13SD280004	13SD290004	13SD290004-AVG	13FD10220302	13SD300004	13SD310004	13SD320004	13SD320004-AVG	13FD10240301
MATRIX	SD	SD	SD	SD	SD	SD	SD	SD	SD	SD	SD	SD
DEPTH RANGE	0 - 0.3	0 - 0.3	0 - 0.3	0 - 0.3	0 - 0.3	0 - 0.3	0 - 0.3	0 - 0.3	0 - 0.3	0 - 0.3	0 - 0.3	0 - 0.3
SAMPLE DATE	10/23/2003	10/23/2003	10/23/2003	10/22/2003	10/22/2003	10/22/2003	10/22/2003	10/22/2003	10/22/2003	10/24/2003	10/24/2003	10/24/2003
VALIDATED	Y	Y	Y	Y	Y	Y	Y	Y	Y	Y	Y	Y
COLLECTION METHOD	GRAB	GRAB	GRAB	GRAB	GRAB	GRAB	GRAB	GRAB	GRAB	GRAB	GRAB	GRAB
BARIUM	121 J	154 J	202 J	199 J	129 J	130.5 J	132 J	125 J	90.8 J			
BERYLLIUM	3.6 J	3.3 J	1.8 J	2.1 J	1.9 J	2.5 J	3.1 J	3.7 J	2 J			
CADMIUM	0.88 J	0.95 J	0.54 J	0.63 J	0.66 J	0.735 J	0.81 J	17.1 J	4.3 J			
CALCIUM	1170 J	2670 J	892 J	799 J	1280 J	1290 J	1300 J	1290 J	2010 J			
CHROMIUM	57.6 J	86.9 J	46.7 J	38.7 J	37.7 J	59.15 J	80.6 J	192 J	49.1 J			
COBALT	63.5 J	68.7 J	34.6 J	40.7 J	36.9 J	37.1 J	37.3 J	19 J	27.5 J			
COPPER	19.7 J	18.3 J	17.6 J	27.8 J	14.4 J	16.55 J	18.7 J	16.4 J	18.4 J			
IRON	121000 J	135000 J	81000 J	112000 J	74300 J	98650 J	123000 J	299000 J	121000 J			
LEAD	49.5 J	46.6 J	46.2 J	35.7 J	32.9 J	38.35 J	43.8 J	45.6 J	20.6 J			
LITHIUM												
MAGNESIUM	823 J	735 J	513 J	1470 J	825 J	759 J	693 J	610 J	1490 J			
MANGANESE	4000 J	3580 J	3040 J	3240 J	2700 J	2930 J	3160 J	2140 J	1330 J			
MERCURY	0.043 J	0.024 J	0.04 J	0.026 J	0.045 J	0.047 J	0.049 J	0.016 J	0.021 J			
NICKEL	63.9 J	65.3 J	38.6 J	33.5 J	45.4 J	47.95 J	50.5 J	42.2 J	54.1 J			
POTASSIUM	1050 J	831 J	729 J	1340 J	971 J	907.5 J	844 J	452 J	2080 J			
SELENIUM	0.98 J	0.91 J	0.96 J	0.56 J	0.98 J	1.19 J	1.4 J	0.62 J	0.48 J			
SODIUM	31.9 U	43 J	21.8 U	31.6 J	31.7 J	22.725 J	27.5 U	28.4 U	92.3 J			
STRONTIUM												
TIN	0.46 U	0.3 U	0.31 U	0.4 U	0.39 U	0.385 U	0.38 U	0.42 U	0.46 U			
TITANIUM	76.8 J	62.9 J	40.9 J	40.9 J	42.6 J	47.85 J	53.1 J	65.6 J	26.4 J			
VANADIUM	59.7 J	70.8 J	43.3 J	46.2 J	43.4 J	54.85 J	66.3 J	101 J	47.6 J			
ZINC	142 J	151 J	69.5 J	72.8 J	139 J	157 J	175 J	186 J	98.3 J			
Miscelaneous Parameters												
CATION EXCHANGE CAPACITY (MEQ/100)												
PH												
TOTAL ORGANIC CARBON (MG/KG)												

SWMU 13
SURFACE WATER

APPENDIX A
POSITIVE HITS TABLE
SURFACE WATER - ROUNDS 1 AND 2
SWMU 13 - MINE FILL B
NSWC CRANE, INDIANA

LOCATION	13SW/SD07	13SW/SD07	13SW/SD08	13SW/SD08	13SW/SD08	13SW/SD08	13SW/SD09	13SW/SD09	13SW/SD09	13SW/SD09	13SW/SD10	13SW/SD10
NSAMPLE	13SW0702	13SW0702-F	13SW0801	13SW0801-F	13SW0802	13SW0802-F	13SW0901	13SW0901-F	13SW0902	13SW0902-F	13SW1001	13SW1001-AVG
SAMPLE	13SW0702	13SW0702-F	13SW0801	13SW0801-F	13SW0802	13SW0802-F	13SW0901	13SW0901F	13SW0902	13SW0902-F	13SW1001	13SW1001-AVG
MATRIX	SW	SF	SW	SF	SW	SF	SW	SF	SW	SF	SW	SW
DEPTH RANGE	---	---	---	---	---	---	---	---	---	---	---	---
SAMPLE DATE	10/27/2003	10/27/2003	5/8/2003	5/8/2003	10/23/2003	10/23/2003	3/29/2003	3/29/2003	10/27/2003	10/27/2003	3/29/2003	3/29/2003
VALIDATED	Y	Y	Y	Y	Y	Y	Y	Y	Y	Y	Y	Y
COLLECTION METHOD	GRAB	GRAB	GRAB	GRAB	GRAB	GRAB	GRAB	GRAB	GRAB	GRAB	GRAB	GRAB
Semivolatile Organics (ug/L)												
Explosives (ug/L)												
2,4,6-TRINITROTOLUENE	0.24 U		0.29 U		0.25 U		0.65 U		0.25 U		0.55 U	0.38 U
2,6-DIAMINO-4-NITROTOLUENE	0.24 U				0.25 U				0.25 U			
2-AMINO-4,6-DINITROTOLUENE	0.24 U		0.29 U		0.25 U		0.65 U		0.25 U		0.55 U	0.38 U
3-NITROTOLUENE	0.24 U		0.29 U		0.25 U		0.65 U		0.25 U		0.55 U	0.38 U
4-AMINO-2,6-DINITROTOLUENE	0.24 U		0.29 U		0.25 U		0.65 U		0.25 U		0.55 U	0.4 J
DNX	0.24 U				0.25 U				0.25 U			
HMX	0.67		1.2		1.2 J		0.65 U		0.25 U		15 J	14 J
MNX	0.24 U				0.25 U				0.25 U			
RDX	0.35		2.8		1.4		0.6 U		0.42 J		18	17
TNX	0.24 U				0.25 U				0.25 U			
Total Inorganics (ug/L)												
ALUMINUM	200 J		1650 J		53.4 U		2700 J		139 J		2080 J	2670 J
ARSENIC	0.32 U		1.2 J		1.5 J		0.91 U		0.33 U		0.80 U	0.89 U
BARIUM	57.8 J		88.4 J		92 J		38.0 J		61.1 J		44.1 J	47.2 J
CALCIUM	64400 J		59900 J		76400 J		18900 J		82600 J		23500 J	23450 J
CHROMIUM	0.43 U		1.9 J		0.44 U		2.5 J		0.59 U		1.9 J	2.45 J
COBALT	0.21 U		0.72 U		3.2 J		0.65 U		0.18 U		2.6 J	2.65 J
COPPER	2.3 J		1.9 J		0.38 U		3.6 J		3.0 J		2.2 J	2.4 J
IRON	198 J		1140 J		2750 J		2350 J		152 J		1740 J	2010 J
LEAD	1.6 U		1.2 U		0.09 U		1.5 J		0.41 U		1.3 J	1.4 J
LITHIUM			1.6 U				1.8 U				6.6 J	7.35 J
MAGNESIUM	4700 J		10500 J		14200 U		3600 J		11400 J		6660 J	6855 J
MANGANESE	34.2 J		118 J		3190 J		25.0 J		10.6 J		231 J	225.5 J
MERCURY	0.02 U		0.20 U		0.02 U		0.02 U		0.02 U		0.02 U	0.02 U
NICKEL	0.67 J		2.0 J		1.2		2.1 J		1.1 J		4.5 J	4.85 J
POTASSIUM	621 J		1430 J		2180 J		1130 J		1320 J		7750 J	7800 J
SELENIUM	0.09 U		0.19 U		0.16 U		0.10 U		0.09 U		0.10 U	0.1 U
SODIUM	88300 J		33100 J		19900 J		3020 J		9120 J		7780 J	7900 J
STRONTIUM			143 J				48.0 J				59.0 J	58.35 J
TITANIUM	4.7 J		24.2 J		1.3 J		51.0 J		6.4 J		36.4 J	47.9 J
VANADIUM	0.61 U		3.2 J		0.27 U		4.9 J		0.57 U		3.6 J	4.55 J
ZINC	10.8 J		7.8 J		17.7 J		27.0 J		68.9 J		13.9 J	15.45 J
Dissolved Inorganics (ug/L)												
ALUMINUM		52.8 U		24.8 U		7.6 U		822		16.5 U		
ARSENIC		0.25 U		0.73 U		1 J		0.47 U		0.26 U		
BARIUM		58.8 J		78.1 J		95.3 J		28.4 J		62.3 J		
CALCIUM		63400 J		5660 J		75300 J		18600 J		81400 J		
CHROMIUM		0.22 U		0.33 U		0.26 U		0.89 U		0.20 U		
COBALT		0.60 J		0.32 U		3.2 J		0.65 U		0.63 J		
COPPER		1.4 J		1.0 U		0.3 U		2.1 J		1.9 J		
IRON		41.6 U		14.9 U		1120 J		750 J		22.4 U		
LEAD		0.13 U		0.20 U		0.27 U		0.38 U		0.02 U		
LITHIUM				0.96 U				0.66 U				
MAGNESIUM		5300 J		9870 J		13700 U		3440 J		11900 J		
MANGANESE		28.7 J		84.4 J		3110 J		9.2 J		5.0 J		

APPENDIX A
POSITIVE HITS TABLE
SURFACE WATER - ROUNDS 1 AND 2
SWMU 13 - MINE FILL B
NSWC CRANE, INDIANA

LOCATION	13SW/SD07	13SW/SD07	13SW/SD08	13SW/SD08	13SW/SD08	13SW/SD08	13SW/SD09	13SW/SD09	13SW/SD09	13SW/SD09	13SW/SD10	13SW/SD10
NSAMPLE	13SW0702	13SW0702-F	13SW0801	13SW0801-F	13SW0802	13SW0802-F	13SW0901	13SW0901-F	13SW0902	13SW0902-F	13SW1001	13SW1001-AVG
SAMPLE	13SW0702	13SW0702-F	13SW0801	13SW0801-F	13SW0802	13SW0802-F	13SW0901	13SW0901F	13SW0902	13SW0902-F	13SW1001	13SW1001-AVG
MATRIX	SW	SF	SW	SF	SW	SF	SW	SF	SW	SF	SW	SW
DEPTH RANGE	---	---	---	---	---	---	---	---	---	---	---	---
SAMPLE DATE	10/27/2003	10/27/2003	5/8/2003	5/8/2003	10/23/2003	10/23/2003	3/29/2003	3/29/2003	10/27/2003	10/27/2003	3/29/2003	3/29/2003
VALIDATED	Y	Y	Y	Y	Y	Y	Y	Y	Y	Y	Y	Y
COLLECTION METHOD	GRAB	GRAB	GRAB	GRAB	GRAB	GRAB	GRAB	GRAB	GRAB	GRAB	GRAB	GRAB
MERCURY		0.02 U		0.20 U		0.02 U		0.02 U		0.02 U		
NICKEL		0.55 U		1.1 J		0.84 J		1.1 J		0.70 J		
POTASSIUM		651 J		1100 J		2200 J		846 J		1370 J		
SELENIUM		0.09 U		0.36 U		0.14 U		0.08 U		0.15 U		
SODIUM		106000 J		3190 J		18800 J		2920 J		9550 J		
STRONTIUM				140 J				45.5 J				
TITANIUM		1.0 U		1.1 U		0.59 J		19.5 J		0.74 U		
VANADIUM		0.35 U		0.38 U		0.1 U		1.6 J		0.34 U		
ZINC		17.4 J		3.4 J		16 U		10.1 J		54.5 J		

Miscellaneous Parameters (mg/L)

APPENDIX A
POSITIVE HITS TABLE
SURFACE WATER - ROUNDS 1 AND 2
SWMU 13 - MINE FILL B
NSWC CRANE, INDIANA

LOCATION	13SW/SD10	13SW/SD10	13SW/SD10	13SW/SD10	13SW/SD10	13SW/SD10	13SW11	13SW11	13SW11	13SW11	13SW/SD12	13SW/SD12
NSAMPLE	13SW1001-D	13SW1001-F	13SW1001-F-AVG	13SW1001-F-D	13SW1002	13SW1002-F	13SW1101	13SW1101-F	13SW1102	13SW1102-F	13SW1201	13SW1201-F
SAMPLE	FD03290303	13SW1001F	13SW1001-F-AVG	FD03290303-F	13SW1002	13SW1002-F	13SW1101	13SW1101-F	13SW1102	13SW1102-F	13SW1201	13SW1201F
MATRIX	SW	SF	SF	SF	SW	SF	SW	SF	SW	SF	SW	SF
DEPTH RANGE	---	---	---	---	---	---	---	---	---	---	---	---
SAMPLE DATE	3/29/2003	3/29/2003	3/29/2003	3/29/2003	10/23/2003	10/23/2003	5/8/2003	5/8/2003	11/18/2003	11/18/2003	3/30/2003	3/30/2003
VALIDATED	Y	Y	Y	Y	Y	Y	Y	Y	Y	Y	Y	Y
COLLECTION METHOD	GRAB	GRAB	GRAB	GRAB	GRAB	GRAB	GRAB	GRAB	GRAB	GRAB	GRAB	GRAB
Semivolatile Organics (ug/L)												
Explosives (ug/L)												
2,4,6-TRINITROTOLUENE	0.21 U				0.27 U		0.21 U		0.287 U		1.9 J	
2,6-DIAMINO-4-NITROTOLUENE					0.27 U				0.287 U			
2-AMINO-4,6-DINITROTOLUENE	0.21 U				0.27 U		0.25 R		0.9 J		0.84 J	
3-NITROTOLUENE	0.21 U				0.27 U		0.21 U		0.287 U		0.28 U	
4-AMINO-2,6-DINITROTOLUENE	0.4 J				0.27 U		1 J		4.5 J		2 J	
DNX					0.59 J				35			
HMX	13				10		93		730		26	
MNX					0.27 U				72			
RDX	16				0.27 U		610		5500		100	
TNX					0.27 U				4			
Total Inorganics (ug/L)												
ALUMINUM	3260 J				106 U		3080 J		7250 J		1330 J	
ARSENIC	0.98 U				0.35 U		35.7 J		8.4 J		4.2 J	
BARIUM	50.3 J				49.6 J		25.3 J		53.3 J		80.7 J	
CALCIUM	23400 J				44600 J		95400 J		45800 J		55000 J	
CHROMIUM	3.0 J				0.42 U		4.5 J		8 J		1.8 J	
COBALT	2.7 J				5.1 J		9.4 J		3.2 J		1.2 J	
COPPER	2.6 J				1.3 J		27.1 J		13.9 J		7.2 J	
IRON	2280 J				406 J		2340 J		6180 J		1090 J	
LEAD	1.5 J				0.27 U		2.3 J		3.5 J		0.92 U	
LITHIUM	8.1 J						2.9 J				2.0 U	
MAGNESIUM	7050 J				8220 J		92200 J		15200 J		18600 J	
MANGANESE	220 J				1900 J		126 J		64 J		69.9 J	
MERCURY	0.02 U				0.02 U		0.20 U		0.007 U		0.02 U	
NICKEL	5.2 J				4.7		20.4 J		8.1 J		4.5 J	
POTASSIUM	7850 J				730 J		690000 J		126000 J		97700 J	
SELENIUM	0.10 U				0.06 U		2.0 J		0.62 U		0.50 U	
SODIUM	8020 J				9750 J		72500 J		17000 J		28300 J	
STRONTIUM	57.7 J						82.4 J				120 J	
TITANIUM	59.4 J				1.9 J		64.6 J		96.9 J		26.3 J	
VANADIUM	5.5 J				0.3 U		43.5 J		16.6 J		5.2 J	
ZINC	17.0 J				7.8 U		67.9 J		47.4 J		16.1 J	
Dissolved Inorganics (ug/L)												
ALUMINUM		303	294.5	286		9.2 U		212 J		283 J		137
ARSENIC		0.37 U	0.33 U	0.29 U		0.25 U		35.3 J		6.7 J		3.6 J
BARIUM		33.7 J	33.85 J	34.0 J		46.2 J		10.1 J		22 J		74.6 J
CALCIUM		24300 J	23800 J	23300 J		43000 J		94400 J		43300 J		51400 J
CHROMIUM		0.55 U	0.505 U	0.46 U		0.31 U		2.0 J		1.5 U		0.67 U
COBALT		1.6 J	1.6 J	1.6 J		6.5 J		8.8 J		4.9 J		1.3 J
COPPER		1.2 U	1.25 U	1.3 U		0.73 J		26.4 J		8.3 J		6.6 J
IRON		343 J	299.5 J	256 J		47.3 U		337 J		356 J		193 J
LEAD		0.18 U	0.24 U	0.30 U		0.05 U		0.26 U		0.32 U		0.22 U
LITHIUM		5.5 J	5.5 J	5.5 J				1.3 U				1.2 U
MAGNESIUM		6610 J	6695 J	6780 J		7970 J		92900 J		15000 J		18000 J
MANGANESE		160 J	157.5 J	155 J		1670 J		72.5 J		10.7 U		52.2 J

APPENDIX A
POSITIVE HITS TABLE
SURFACE WATER - ROUNDS 1 AND 2
SWMU 13 - MINE FILL B
NSWC CRANE, INDIANA

LOCATION	13SW/SD10	13SW/SD10	13SW/SD10	13SW/SD10	13SW/SD10	13SW/SD10	13SW11	13SW11	13SW11	13SW11	13SW/SD12	13SW/SD12
NSAMPLE	13SW1001-D	13SW1001-F	13SW1001-F-AVG	13SW1001-F-D	13SW1002	13SW1002-F	13SW1101	13SW1101-F	13SW1102	13SW1102-F	13SW1201	13SW1201-F
SAMPLE	FD03290303	13SW1001F	13SW1001-F-AVG	FD03290303-F	13SW1002	13SW1002-F	13SW1101	13SW1101-F	13SW1102	13SW1102-F	13SW1201	13SW1201F
MATRIX	SW	SF	SF	SF	SW	SF	SW	SF	SW	SF	SW	SF
DEPTH RANGE	---	---	---	---	---	---	---	---	---	---	---	---
SAMPLE DATE	3/29/2003	3/29/2003	3/29/2003	3/29/2003	10/23/2003	10/23/2003	5/8/2003	5/8/2003	11/18/2003	11/18/2003	3/30/2003	3/30/2003
VALIDATED	Y	Y	Y	Y	Y	Y	Y	Y	Y	Y	Y	Y
COLLECTION METHOD	GRAB	GRAB	GRAB	GRAB	GRAB	GRAB	GRAB	GRAB	GRAB	GRAB	GRAB	GRAB
MERCURY		0.02 U	0.02 U	0.02 U		0.02 U		0.20 U		0.007 U		0.02 U
NICKEL		3.3 J	3.3 J	3.3 J		4.1		18.6 J		4 J		3.8 J
POTASSIUM		7430 J	7375 J	7320 J		600 J		700000 J		125000 J		97700 J
SELENIUM		0.13 U	0.11 U	0.09 U		0.08 U		2.2 J		0.46 U		0.44 U
SODIUM		7840 J	7910 J	7980 J		9570 J		73200 J		17600 J		27500 J
STRONTIUM		56.3 J	55.3 J	54.3 J				79.9 J				117 J
TITANIUM		8.0 J	7.5 J	7.0 J		0.11 J		18.6 J		8.7 J		7.7 J
VANADIUM		0.73 U	0.69 U	0.65 U		0.06 U		38.5 J		6 J		3.4 J
ZINC		8.6 J	9.5 J	10.4 J		7.8 U		30.6 J		9.3 J		8.1 J

Miscellaneous Parameters (mg/L)

APPENDIX A
POSITIVE HITS TABLE
SURFACE WATER - ROUNDS 1 AND 2
SWMU 13 - MINE FILL B
NSWC CRANE, INDIANA

LOCATION	13SW/SD12	13SW/SD12	13SW/SD13	13SW/SD13	13SW/SD13	13SW/SD13	13SW/SD13	13SW/SD13	13SW/SD13	13SW/SD13	13SW/SD14	13SW/SD14
NSAMPLE	13SW1202	13SW1202-F	13SW1301	13SW1301-F	13SW1302	13SW1302-AVG	13SW1302-D	13SW1302-F	13SW1302-F-AVG	13SW1302-F-D	13SW1401	13SW1401-AVG
SAMPLE	13SW1202	13SW1202-F	13SW1301	13SW1301F	13SW1302	13SW1302-AVG	13FD10220303	13SW1302-F	13SW1302-F-AVG	13FD10220303-F	13SW1401	13SW1401-AVG
MATRIX	SW	SF	SW	SF	SW	SW	SW	SF	SF	SF	SW	SW
DEPTH RANGE	---	---	---	---	---	---	---	---	---	---	---	---
SAMPLE DATE	10/22/2003	10/22/2003	3/30/2003	3/30/2003	10/22/2003	10/22/2003	10/22/2003	10/22/2003	10/22/2003	10/22/2003	10/22/2003	10/22/2003
VALIDATED	Y	Y	Y	Y	Y	Y	Y	Y	Y	Y	Y	Y
COLLECTION METHOD	GRAB	GRAB	GRAB	GRAB	GRAB	GRAB	GRAB	GRAB	GRAB	GRAB	GRAB	GRAB
Semivolatile Organics (ug/L)												
Explosives (ug/L)												
2,4,6-TRINITROTOLUENE	0.24 U		6.8		0.24 U	0.24 U	0.24 U				0.24 U	0.24 U
2,6-DIAMINO-4-NITROTOLUENE	0.24 U				0.44 J	0.53 J	0.62 J				0.24 U	0.24 U
2-AMINO-4,6-DINITROTOLUENE	0.52 J		1.6 J		8.3 J	9.05 J	9.8 J				1.3	1.35 J
3-NITROTOLUENE	0.24 U		0.6 U		0.31 J	0.215 J	0.24 U				0.24 U	0.24 U
4-AMINO-2,6-DINITROTOLUENE	0.98 J		3.8 J		21 J	23 J	25				2.9	2.95
DNX	3.5 J				4.2 J	3.9 J	3.6 J				2.7 J	3.1 J
HMX	19		14		33 J	34.5 J	36				20	22
MNX	3.1				5.2 J	5.35 J	5.5				3.8 J	4.55 J
RDX	57		84		180 J	195 J	210				77	87
TNX	0.81				1.1 J	1.2 J	1.3				0.62 J	0.86 J
Total Inorganics (ug/L)												
ALUMINUM	1740 J		714 J		167 J	164 J	161 J				202 J	257 J
ARSENIC	2.2 J		0.95 U		1.3 J	1.35 J	1.4 J				0.85 J	0.865 J
BARIUM	68.5 J		58.8 J		94.3 J	93.85 J	93.4 J				78.6 J	77.45 J
CALCIUM	54700 J		38700 J		74800 J	74150 J	73500 J				36700 J	38650 J
CHROMIUM	3.2 J		0.98 U		0.69 U	0.72 U	0.75 U				1 U	1.05 U
COBALT	2.4 J		1.9 J		1.2 J	1.25 J	1.3 J				0.19 U	0.22 U
COPPER	4.2 J		2.4 J		3.8 J	3.8 J	3.8 J				2.8 J	2.75 J
IRON	1920 J		673 J		337 J	347 J	357 J				147 U	179.25 J
LEAD	2 J		0.77 U		0.24 U	0.255 U	0.27 U				0.15 U	0.18 U
LITHIUM			3.9 J									
MAGNESIUM	13000 J		7480 J		12600 J	12450 J	12300 J				10100 J	10450 J
MANGANESE	292 J		107 J		170 J	181 J	192 J				26.1 J	22.65 J
MERCURY	0.02 U		0.02 U		0.02 U	0.02 U	0.02 U				0.02 U	0.02 U
NICKEL	5.7		3.8 J		6.3	6.25	6.2				1.9	1.95
POTASSIUM	31800 J		15100 J		42400 J	42400 J	42400 J				36000 J	38000 J
SELENIUM	0.41 U		0.15 U		0.36 U	0.365 U	0.37 U				0.21 U	0.205 U
SODIUM	16700 J		8900 J		16700 J	16500 J	16300 J				10600 J	11000 J
STRONTIUM			94.3 J									
TITANIUM	31.8		11.6 J		3.6 J	3.55 J	3.5 J				4.5 J	4.8 J
VANADIUM	5.1 J		1.8 J		1.1 J	1.05 J	1 J				0.92 J	1.01 J
ZINC	18.1 J		21.2 J		18.3 J	19.5 J	20.7 J				2.5 U	2.6 U
Dissolved Inorganics (ug/L)												
ALUMINUM		43.2 U		103				35.3 U	35.5 U	35.7 U		
ARSENIC		1.4 J		0.66 U				1.2 J	1.2 J	1.2 J		
BARIUM		51.7 J		53.7 J				94.5 J	93.7 J	92.9 J		
CALCIUM		54500 J		37900 J				73100 J	73350 J	73600 J		
CHROMIUM		0.72 U		0.27 U				0.63 U	0.595 U	0.56 U		
COBALT		2.9 J		1.7 J				1 J	1.15 J	1.3 J		
COPPER		2.5 J		1.9 J				3.5 J	3.4 J	3.3 J		
IRON		44.2 U		82.5 J				122 U	104.75 U	87.5 U		
LEAD		0.13 U		0.08 U				0.09 U	0.085 U	0.08 U		
LITHIUM				3.5 J								
MAGNESIUM		12900 J		7630 J				12300 J	12350 J	12400 J		
MANGANESE		119 J		88.3 J				141 J	148.5 J	156 J		

APPENDIX A
POSITIVE HITS TABLE
SURFACE WATER - ROUNDS 1 AND 2
SWMU 13 - MINE FILL B
NSWC CRANE, INDIANA

LOCATION	13SW/SD12	13SW/SD12	13SW/SD13	13SW/SD13	13SW/SD13	13SW/SD13	13SW/SD13	13SW/SD13	13SW/SD13	13SW/SD13	13SW/SD14	13SW/SD14
NSAMPLE	13SW1202	13SW1202-F	13SW1301	13SW1301-F	13SW1302	13SW1302-AVG	13SW1302-D	13SW1302-F	13SW1302-F-AVG	13SW1302-F-D	13SW1401	13SW1401-AVG
SAMPLE	13SW1202	13SW1202-F	13SW1301	13SW1301F	13SW1302	13SW1302-AVG	13FD10220303	13SW1302-F	13SW1302-F-AVG	13FD10220303-F	13SW1401	13SW1401-AVG
MATRIX	SW	SF	SW	SF	SW	SW	SW	SF	SF	SF	SW	SW
DEPTH RANGE	---	---	---	---	---	---	---	---	---	---	---	---
SAMPLE DATE	10/22/2003	10/22/2003	3/30/2003	3/30/2003	10/22/2003	10/22/2003	10/22/2003	10/22/2003	10/22/2003	10/22/2003	10/22/2003	10/22/2003
VALIDATED	Y	Y	Y	Y	Y	Y	Y	Y	Y	Y	Y	Y
COLLECTION METHOD	GRAB	GRAB	GRAB	GRAB	GRAB	GRAB	GRAB	GRAB	GRAB	GRAB	GRAB	GRAB
MERCURY		0.02 U		0.02 U				0.02 U	0.02 U	0.02 U		
NICKEL		3.2		3.2 J				6.2	6.15	6.1		
POTASSIUM		31100 J		15100 J				42100 J	42300 J	42500 J		
SELENIUM		0.28 U		0.18 U				0.36 U	0.365 U	0.37 U		
SODIUM		16500 J		9160 J				16400 J	16450 J	16500 J		
STRONTIUM				91.8 J								
TITANIUM		1.5 J		3.0 J				0.55 J	0.585 J	0.62 J		
VANADIUM		1.2 J		0.67 U				0.75 J	0.77 J	0.79 J		
ZINC		4.1 U		13.1 J				15.4 U	15.45 U	15.5 U		

Miscellaneous Parameters (mg/L)

APPENDIX A
POSITIVE HITS TABLE
SURFACE WATER - ROUNDS 1 AND 2
SWMU 13 - MINE FILL B
NSWC CRANE, INDIANA

LOCATION	13SW/SD14	13SW/SD14	13SW/SD14	13SW/SD14	13SW/SD15	13SW/SD15	13SW/SD16	13SW/SD16	13SW/SD18	13SW/SD18	13SW/SD19	13SW/SD19
NSAMPLE	13SW1401-D	13SW1401-F	13SW1401-F-AVG	13SW1401-F-D	13SW1501	13SW1501-F	13SW1601	13SW1601-F	13SW1801	13SW1801-F	13SW1901	13SW1901-F
SAMPLE	13FD10220301	13SW1401-F	13SW1401-F-AVG	13FD10220301-F	13SW1501	13SW1501-F	13SW1601	13SW1601-F	13SW1801	13SW1801-F	13SW1901	13SW1901-F
MATRIX	SW	SF	SF	SF	SW	SF	SW	SF	SW	SF	SW	SF
DEPTH RANGE	---	---	---	---	---	---	---	---	---	---	---	---
SAMPLE DATE	10/22/2003	10/22/2003	10/22/2003	10/22/2003	10/27/2003	10/27/2003	10/22/2003	10/22/2003	10/23/2003	10/23/2003	10/23/2003	10/23/2003
VALIDATED	Y	Y	Y	Y	Y	Y	Y	Y	Y	Y	Y	Y
COLLECTION METHOD	GRAB	GRAB	GRAB	GRAB	GRAB	GRAB	GRAB	GRAB	GRAB	GRAB	GRAB	GRAB
Semivolatile Organics (ug/L)												
Explosives (ug/L)												
2,4,6-TRINITROTOLUENE	0.24 U				0.24 U		0.25 U		0.25 U		0.24 U	
2,6-DIAMINO-4-NITROTOLUENE	0.24 U				0.24 U		0.25 U		0.25 U		0.24 U	
2-AMINO-4,6-DINITROTOLUENE	1.4 J				0.24 U		0.8 J		0.25 U		0.24 U	
3-NITROTOLUENE	0.24 U				0.24 U		0.29 J		0.25 U		0.24 U	
4-AMINO-2,6-DINITROTOLUENE	3				0.24 U		1.6		0.25 U		0.24 U	
DNX	3.5 J				23 J		3.6 J		0.25 U		0.24 U	
HMX	24				210		21		0.25 U		0.24 U	
MNX	5.3 J				47		3		0.25 U		0.24 U	
RDX	97				1500		50		0.25 U		0.24 U	
TNX	1.1 J				4		0.48 J		0.25 U		0.24 U	
Total Inorganics (ug/L)												
ALUMINUM	312 J				3760 J		5690 J		68.2 U		95.4 U	
ARSENIC	0.88 J				4.0 J		1.4 J		0.14 U		0.19 U	
BARIUM	76.3 J				91.3 J		101 J		57 J		50.1 J	
CALCIUM	40600 J				21900 J		29000 J		43800 J		72500 J	
CHROMIUM	1.1 U				8.1 J		8.2 J		0.39 U		0.58 U	
COBALT	0.25 U				9.0 J		1.1 J		0.07 U		0.39 U	
COPPER	2.7 J				18.0 J		3.1 J		0.56 U		0.89 J	
IRON	285 J				6220 J		3600 J		47.8 U		74.8 U	
LEAD	0.21 U				9.7 J		1.8 J		0.07 U		0.13 U	
LITHIUM												
MAGNESIUM	10800 J				9300 J		7980 J		8940 J		15600 J	
MANGANESE	19.2 J				516 J		61.4 J		19.5 J		26 J	
MERCURY	0.02 U				0.047 J		0.02 U		0.02 U		0.02 U	
NICKEL	2				22.0 J		5.2		0.86 J		1.5	
POTASSIUM	40000 J				30000 J		17500 J		1800 J		2960 J	
SELENIUM	0.2 U				0.31 U		0.13 U		0.12 U		0.09 U	
SODIUM	11400 J				6640 J		8500 J		28900 J		41500 J	
STRONTIUM												
TITANIUM	5.1 J				56.7 J		69.3		1.9 J		1.7 J	
VANADIUM	1.1 J				8.4 J		12 J		0.19 U		0.22 U	
ZINC	2.7 U				54.1 J		20.3 J		2.1 U		13.1 U	
Dissolved Inorganics (ug/L)												
ALUMINUM		36.8 U	38.9 U	41 U		255 J		134 J		33.1 U		8.9 U
ARSENIC		0.8 J	0.825 J	0.85 J		0.64 J		0.26 U		0.09 U		0.11 U
BARIUM		75.9 J	76.6 J	77.3 J		40.5 J		70.1 J		58 J		50 J
CALCIUM		39800 J	39800 J	39800 J		20400 J		28900 J		43600 J		73800 J
CHROMIUM		0.5 U	0.605 U	0.71 U		0.59 U		0.63 U		0.36 U		0.41 U
COBALT		0.21 U	1.8025 J	3.5 J		0.97 J		3.3 J		2.7 J		0.26 U
COPPER		2.7 J	2.6 J	2.5 J		3.8 J		1.5 J		0.57 J		0.46 U
IRON		46 U	38.95 U	31.9 U		211 J		114 U		13.8 U		7 U
LEAD		0.08 U	0.07 U	0.06 U		0.17 U		0.11 U		0.04 U		0.04 U
LITHIUM												
MAGNESIUM		10700 J	10750 J	10800 J		8560 J		8100 J		8610 J		15400 J
MANGANESE		10 J	12.4 J	14.8 J		4.0 J		25.9 J		17.8 J		5.9 J

APPENDIX A
POSITIVE HITS TABLE
SURFACE WATER - ROUNDS 1 AND 2
SWMU 13 - MINE FILL B
NSWC CRANE, INDIANA

LOCATION	13SW/SD14	13SW/SD14	13SW/SD14	13SW/SD14	13SW/SD15	13SW/SD15	13SW/SD16	13SW/SD16	13SW/SD18	13SW/SD18	13SW/SD19	13SW/SD19
NSAMPLE	13SW1401-D	13SW1401-F	13SW1401-F-AVG	13SW1401-F-D	13SW1501	13SW1501-F	13SW1601	13SW1601-F	13SW1801	13SW1801-F	13SW1901	13SW1901-F
SAMPLE	13FD10220301	13SW1401-F	13SW1401-F-AVG	13FD10220301-F	13SW1501	13SW1501-F	13SW1601	13SW1601-F	13SW1801	13SW1801-F	13SW1901	13SW1901-F
MATRIX	SW	SF	SF	SF	SW	SF	SW	SF	SW	SF	SW	SF
DEPTH RANGE	---	---	---	---	---	---	---	---	---	---	---	---
SAMPLE DATE	10/22/2003	10/22/2003	10/22/2003	10/22/2003	10/27/2003	10/27/2003	10/22/2003	10/22/2003	10/23/2003	10/23/2003	10/23/2003	10/23/2003
VALIDATED	Y	Y	Y	Y	Y	Y	Y	Y	Y	Y	Y	Y
COLLECTION METHOD	GRAB	GRAB	GRAB	GRAB	GRAB	GRAB	GRAB	GRAB	GRAB	GRAB	GRAB	GRAB
MERCURY		0.02 U	0.02 U	0.02 U		0.02 U		0.02 U		0.02 U		0.02 U
NICKEL		1.8	1.9	2		3.8 J		1.2		0.96 J		0.85 J
POTASSIUM		39900 J	39550 J	39200 J		28600 J		16200 J		1780 J		2920 J
SELENIUM		0.24 U	0.245 U	0.25 U		0.26 U		0.12 U		0.13 U		0.08 U
SODIUM		11400 J	11400 J	11400 J		7110 J		9450 J		28200 J		41300 J
STRONTIUM												
TITANIUM		1 J	0.785 J	0.57 J		6.5 J		3.7 J		1.2 J		0.76 J
VANADIUM		0.6 J	0.625 J	0.65 J		0.69 J		0.44 J		0.12 U		0.07 U
ZINC		2.3 U	2.55 U	2.8 U		14.1 J		8.9 U		2.4 U		2.2 U

Miscellaneous Parameters (mg/L)

APPENDIX A
POSITIVE HITS TABLE
SURFACE WATER - ROUNDS 1 AND 2
SWMU 13 - MINE FILL B
NSWC CRANE, INDIANA

LOCATION	13SW/SD20	13SW/SD20	13SW/SD22	13SW/SD22	13SW/SD24	13SW/SD24	13SW/SD25	13SW/SD25	13SW/SD25	13SW/SD25	13SW/SD25	13SW/SD25
NSAMPLE	13SW2001	13SW2001-F	13SW2201	13SW2201-F	13SW2401	13SW2401-F	13SW2501	13SW2501-AVG	13SW2501-D	13SW2501-F	13SW2501-F-AVG	13SW2501-F-D
SAMPLE	13SW2001	13SW2001-F	13SW2201	13SW2201-F	13SW2401	13SW2401-F	13SW2501	13SW2501-AVG	13FD10270301	13SW2501-F	13SW2501-F-AVG	13FD10270301-F
MATRIX	SW	SF	SW	SF	SW	SF	SW	SW	SW	SF	SF	SF
DEPTH RANGE	---	---	---	---	---	---	---	---	---	---	---	---
SAMPLE DATE	10/23/2003	10/23/2003	10/22/2003	10/22/2003	10/27/2003	10/27/2003	10/27/2003	10/27/2003	10/27/2003	10/27/2003	10/27/2003	10/27/2003
VALIDATED	Y	Y	Y	Y	Y	Y	Y	Y	Y	Y	Y	Y
COLLECTION METHOD	GRAB	GRAB	GRAB	GRAB	GRAB	GRAB	GRAB	GRAB	GRAB	GRAB	GRAB	GRAB
Semivolatile Organics (ug/L)												
Explosives (ug/L)												
2,4,6-TRINITROTOLUENE	0.27 U		0.26 U		0.26 U		0.25 U	0.25 U	0.25 U			
2,6-DIAMINO-4-NITROTOLUENE	0.27 U		0.26 U		0.26 U		0.25 U	0.25 U	0.25 U			
2-AMINO-4,6-DINITROTOLUENE	0.27 U		0.26 U		0.26 U		0.25 U	0.25 U	0.25 U			
3-NITROTOLUENE	0.27 U		0.26 U		0.26 U		0.25 U	0.25 U	0.25 U			
4-AMINO-2,6-DINITROTOLUENE	0.27 U		0.26 U		0.26 U		0.25 U	0.25 U	0.25 U			
DNX	0.27 U		0.26 U		0.26 U		0.25 U	0.25 U	0.25 U			
HMX	0.27 U		0.26 U		0.26 U		0.25 U	0.25 U	0.25 U			
MNX	0.27 U		0.26 U		0.26 U		0.25 U	0.25 U	0.25 U			
RDX	0.46 J		1.6		0.26 U		0.25 U	0.25 U	0.25 U			
TNX	0.27 U		0.26 U		0.26 U		0.25 U	0.25 U	0.25 U			
Total Inorganics (ug/L)												
ALUMINUM	437 J		392 J		482 J		41.9 U	39.35 U	36.8 U			
ARSENIC	0.24 U		0.26 U		0.38 U		0.11 U	0.12 U	0.13 U			
BARIUM	55.6 J		77.7 J		47.3 J		50.7 J	55.1 J	59.5 J			
CALCIUM	3040 J		62300 J		17200 J		28100 J	29950 J	31800 J			
CHROMIUM	0.95 U		0.45 U		0.62 U		0.19 U	0.16 U	0.13 U			
COBALT	0.33 U		0.47 J		0.52 U		0.07 U	0.06 U	0.05 U			
COPPER	1.3 J		1.3 J		3.4 J		0.89 U	0.915 U	0.94 U			
IRON	455 J		116 U		432 J		34.7 U	31.4 U	28.1 U			
LEAD	0.35 U		0.31 U		0.78 U		0.07 U	0.185 U	0.30 U			
LITHIUM												
MAGNESIUM	836 J		8520 J		4770 J		7540 J	7915 J	8290 J			
MANGANESE	41.4 J		136 J		111 J		7.5 J	6.3 J	5.1 J			
MERCURY	0.02 U		0.02 U		0.02 U		0.02 U	0.555	1.1			
NICKEL	1.2		1.6		1.8 J		0.76 J	0.85 J	0.94 J			
POTASSIUM	1980 J		2190 J		3310 J		1700 J	1780 J	1860 J			
SELENIUM	0.08 U		0.13 U		0.12 U		0.04 U	0.055 U	0.07 U			
SODIUM	2260 J		29200 J		17200 J		13900 J	14700 J	15500 J			
STRONTIUM												
TITANIUM	6.4		1.9 J		6.7 J		0.73 U	0.725 U	0.72 U			
VANADIUM	1.1 J		0.42 J		0.88 J		0.11 U	0.11 U	0.11 U			
ZINC	7.9 U		9.7 U		9.4 J		6.8 J	7.45 J	8.1 J			
Dissolved Inorganics (ug/L)												
ALUMINUM		19.4 U		7.6 U		217 J				9.9 U	33 U	56.1 U
ARSENIC		0.13 U		0.2 U		0.18 U				0.11 U	0.115 U	0.12 U
BARIUM		55.2 J		57.8 J		44.5 J				55.1 J	54.55 J	54.0 J
CALCIUM		30500 J		61300 J		17500 J				28200 J	28050 J	27900 J
CHROMIUM		0.32 U		0.3 U		0.46 U				0.13 U	0.17 U	0.21 U
COBALT		2.8 J		1.3 J		0.77 J				0.52 U	0.29 U	0.06 U
COPPER		0.73 J		0.95 J		1.9 J				0.81 U	0.715 U	0.62 U
IRON		11.6 U		9 U		137 J				6.2 U	18.65 U	31.1 U
LEAD		0.06 U		0.07 U		0.09 U				0.02 U	0.02 U	0.02 U
LITHIUM												
MAGNESIUM		8290 J		8250 J		4860 J				7720 J	7580 J	7440 J
MANGANESE		30.5 J		25.3 J		59.3 J				2.1 U	1.8 U	1.5 U

APPENDIX A
POSITIVE HITS TABLE
SURFACE WATER - ROUNDS 1 AND 2
SWMU 13 - MINE FILL B
NSWC CRANE, INDIANA

LOCATION	13SW/SD20	13SW/SD20	13SW/SD22	13SW/SD22	13SW/SD24	13SW/SD24	13SW/SD25	13SW/SD25	13SW/SD25	13SW/SD25	13SW/SD25	13SW/SD25
NSAMPLE	13SW2001	13SW2001-F	13SW2201	13SW2201-F	13SW2401	13SW2401-F	13SW2501	13SW2501-AVG	13SW2501-D	13SW2501-F	13SW2501-F-AVG	13SW2501-F-D
SAMPLE	13SW2001	13SW2001-F	13SW2201	13SW2201-F	13SW2401	13SW2401-F	13SW2501	13SW2501-AVG	13FD10270301	13SW2501-F	13SW2501-F-AVG	13FD10270301-F
MATRIX	SW	SF	SW	SF	SW	SF	SW	SW	SW	SF	SF	SF
DEPTH RANGE	---	---	---	---	---	---	---	---	---	---	---	---
SAMPLE DATE	10/23/2003	10/23/2003	10/22/2003	10/22/2003	10/27/2003	10/27/2003	10/27/2003	10/27/2003	10/27/2003	10/27/2003	10/27/2003	10/27/2003
VALIDATED	Y	Y	Y	Y	Y	Y	Y	Y	Y	Y	Y	Y
COLLECTION METHOD	GRAB	GRAB	GRAB	GRAB	GRAB	GRAB	GRAB	GRAB	GRAB	GRAB	GRAB	GRAB
MERCURY		0.02 U		0.02 U		0.02 U				0.02 U	0.02 U	0.02 U
NICKEL		0.96 J		0.97 J		1.4 J				0.89 J	0.835 J	0.78 J
POTASSIUM		2000 J		2100 J		3310 J				1760 J	1740 J	1720 J
SELENIUM		0.07 U		0.09 U		0.04 U				0.04 U	0.075 U	0.11 U
SODIUM		22100 J		29400 J		18000 J				14600 J	14400 J	14200 J
STRONTIUM												
TITANIUM		0.27 J		0.2 J		4.8 J				0.34 U	0.835 J	1.5 J
VANADIUM		0.1 U		0.2 U		0.39 U				0.06 U	0.095 U	0.13 U
ZINC		9.5 U		4.4 U		11.4 J				6.9 J	5.05 J	3.2 J

Miscellaneous Parameters (mg/L)

APPENDIX A
POSITIVE HITS TABLE
SURFACE WATER - ROUNDS 1 AND 2
SWMU 13 - MINE FILL B
NSWC CRANE, INDIANA

LOCATION	13SW/SD26	13SW/SD26	13SW/SD27	13SW/SD27	13SW/SD28	13SW/SD28	13SW/SD30	13SW/SD30	13SW/SD31	13SW/SD31	13SW/SD32
NSAMPLE	13SW2601	13SW2601-F	13SW2701	13SW2701-F	13SW2801	13SW2801-F	13SW3001	13SW3001-F	13SW3101	13SW3101-F	13SW3201
SAMPLE	13SW2601	13SW2601-F	13SW2701	13SW2701-F	13SW2801	13SW2801-F	13SW3001	13SW3001-F	13SW3101	13SW3101-F	13SW3201
MATRIX	SW	6F	SW	SF	SW	SF	SW	SF	SW	SF	SW
DEPTH RANGE	---	---	---	---	---	---	---	---	---	---	---
SAMPLE DATE	10/27/2003	10/27/2003	10/23/2003	10/23/2003	10/27/2003	10/27/2003	10/22/2003	10/22/2003	10/22/2003	10/22/2003	10/24/2003
VALIDATED	Y	Y	Y	Y	Y	Y	Y	Y	Y	Y	Y
COLLECTION METHOD	GRAB	GRAB	GRAB	GRAB	GRAB	GRAB	GRAB	GRAB	GRAB	GRAB	GRAB
Semivolatile Organics (ug/L)											
Explosives (ug/L)											
2,4,6-TRINITROTOLUENE	0.25 U		0.26 U		0.24 U		0.25 U		0.27 U		
2,6-DIAMINO-4-NITROTOLUENE	0.25 U		0.26 U		0.24 U		0.25 U		0.27 U		
2-AMINO-4,6-DINITROTOLUENE	0.25 U		0.26 U		0.24 U		0.25 U		0.27 U		
3-NITROTOLUENE	0.25 U		0.26 U		0.24 U		0.25 U		0.27 U		
4-AMINO-2,6-DINITROTOLUENE	0.25 U		0.46 J		0.24 U		0.25 U		0.27 U		
DNX	0.25 U		0.86		0.24 U		0.25 U		0.27 U		
HMX	0.25 U		8.2		0.24 U		3.2 J		0.27 U		
MNX	0.25 U		1.2 J		0.24 U		0.28 J		0.27 U		
RDX	0.25 U		22		0.24 U		6.2		0.27 U		
TNX	0.25 U		0.26 U		0.24 U		0.25 U		0.27 U		
Total Inorganics (ug/L)											
ALUMINUM	108 J		139 J		486 J		40.9 U		30.6 U		
ARSENIC	0.15 U		0.48 U		0.35 U		0.3 U		0.23 U		
BARIUM	62.5 J		54.6 J		58.1 J		54.1 J		53.7 J		
CALCIUM	27900 J		26400 J		6550 J		54800 J		55700 J		
CHROMIUM	0.60 U		0.6 U		0.82 J		0.84 U		0.85 U		
COBALT	0.11 U		0.18 U		0.26 U		0.07 U		0.34 U		
COPPER	1.3 J		2.2 J		1.3 J		1.4 J		1.1 J		
IRON	75.4 U		162 U		415 J		175 J		24.5 U		
LEAD	0.76 U		0.22 U		0.45 U		0.12 U		0.09 U		
LITHIUM											
MAGNESIUM	6930 J		8260 J		3600 J		9770 J		9090 J		
MANGANESE	14.2 J		28.1 J		122 J		7.9 J		2 U		
MERCURY	0.02 U		0.02 U		0.02 U		0.02 U		0.02 U		
NICKEL	2.5 J		1.3		2.3 J		0.45 J		0.77 J		
POTASSIUM	1750 J		20400 J		1800 J		4850 J		2560 J		
SELENIUM	0.09 U		0.11 U		0.06 U		0.1 U		0.11 U		
SODIUM	16200 J		9470 J		1540 J		25600 J		34300 J		
STRONTIUM											
TITANIUM	2.2 J		2 J		10.1 J		2.3 J		0.31 J		
VANADIUM	0.27 U		0.55 J		0.89 J		0.22 U		0.16 U		
ZINC	12.3 J		2.7 U		8.8 J		2.1 U		6.8 U		
Dissolved Inorganics (ug/L)											
ALUMINUM		156 J		11 U		254 J		20.9 U		7.6 U	
ARSENIC		0.17 U		0.42 U		0.16 U		0.19 U		0.27 U	
BARIUM		65.2 J		54.8 J		54.1 J		81.6 J		52.7 J	
CALCIUM		28800 J		26300 J		6680 J		29000 J		54900 J	
CHROMIUM		0.46 U		0.38 U		0.44 U		0.3 U		0.73 U	
COBALT		0.64 J		3.1 J		0.79 J		2.8 J		3.2 J	
COPPER		1.9 J		1.9 J		0.93 U		1.5 J		1 J	
IRON		75.9 U		15.8 U		155 J		29.1 U		5.7 U	
LEAD		0.19 U		0.09 U		0.16 U		0.11 U		0.04 U	
LITHIUM											
MAGNESIUM		7130 J		8050 J		3770 J		9090 J		9630 J	
MANGANESE		11.7 J		13.3 J		112 J		23 J		6.1 J	

APPENDIX A
POSITIVE HITS TABLE
SURFACE WATER - ROUNDS 1 AND 2
SWMU 13 - MINE FILL B
NSWC CRANE, INDIANA

LOCATION	13SW/SD26	13SW/SD26	13SW/SD27	13SW/SD27	13SW/SD28	13SW/SD28	13SW/SD30	13SW/SD30	13SW/SD31	13SW/SD31	13SW/SD32
NSAMPLE	13SW2601	13SW2601-F	13SW2701	13SW2701-F	13SW2801	13SW2801-F	13SW3001	13SW3001-F	13SW3101	13SW3101-F	13SW3201
SAMPLE	13SW2601	13SW2601-F	13SW2701	13SW2701-F	13SW2801	13SW2801-F	13SW3001	13SW3001-F	13SW3101	13SW3101-F	13SW3201
MATRIX	SW	SF	SW	SF	SW	SF	SW	SF	SW	SF	SW
DEPTH RANGE	---	---	---	---	---	---	---	---	---	---	---
SAMPLE DATE	10/27/2003	10/27/2003	10/23/2003	10/23/2003	10/27/2003	10/27/2003	10/22/2003	10/22/2003	10/22/2003	10/22/2003	10/24/2003
VALIDATED	Y	Y	Y	Y	Y	Y	Y	Y	Y	Y	Y
COLLECTION METHOD	GRAB	GRAB	GRAB	GRAB	GRAB	GRAB	GRAB	GRAB	GRAB	GRAB	GRAB
MERCURY		0.02 U		0.02 U		0.02 U		0.02 U		0.02 U	
NICKEL		2.4 J		1.4		1.8 J		1.4		0.87 J	
POTASSIUM		1810 J		20700 J		1850 J		15100 J		2470 J	
SELENIUM		0.10 U		0.11 U		0.04 U		0.09 U		0.13 U	
SODIUM		16800 J		9250 J		1660 J		9830 J		33800 J	
STRONTIUM											
TITANIUM		2.8 J		0.1 J		5.3 J		0.6 J		0.22 J	
VANADIUM		0.37 U		0.24 U		0.40 U		0.18 U		0.12 U	
ZINC		6.6 J		2.1 U		18.6 J		7.6 U		1.7 U	

Miscellaneous Parameters (mg/L)

SMWU 13
SEEPS

APPENDIX A
POSITIVE HITS TABLE
SEEPS - ROUND 2
SWMU 13 - MINE FILL B
NSWC CRANE, INDIANA

LOCATION	13SP01	13SP01	13SP02	13SP02	13SP03	13SP03	13SP04	13SP04
NSAMPLE	13SP0101	13SP0101-F	13SP0201	13SP0201-F	13SP0301	13SP0301-F	13SP0401	13SP0401-F
SAMPLE	13SP0101	13SP0101-F	13SP0201	13SP0201-F	13SP0301	13SP0301-F	13SP0401	13SP0401-F
MATRIX	SP	SP	SP	SP	SP	SP	SP	SP
DEPH RANGE	---	---	---	---	---	---	---	---
SAMPLE DATE	10/22/2003	10/22/2003	10/22/2003	10/22/2003	10/22/2003	10/22/2003	10/22/2003	10/22/2003
VALIDATED	Y	Y	Y	Y	Y	Y	Y	Y
COLLECTION METHOD	GRAB	GRAB	GRAB	GRAB	GRAB	GRAB	GRAB	GRAB
Explosives (ug/L)								
1,3,5-TRINITROBENZENE	0.26 U		0.26 U		0.47		0.25 U	
2-AMINO-4,6-DINITROTOLUENE	0.26 U		1.1 J		0.24 U		0.25 U	
3-NITROTOLUENE	0.26 U		0.35 J		0.24 U		0.25 U	
4-AMINO-2,6-DINITROTOLUENE	0.26 U		2.3		0.24 U		0.25 U	
DNX	3 J		2.5		0.24 U		0.25 U	
HMX	9 J		20		0.24 U		0.25 U	
MNX	2.2		4		0.24 U		0.25 U	
RDX	21		77		0.24 U		1.9 J	
TNX	0.45 J		0.59		0.24 U		0.25 U	
Total Inorganics (ug/L)								
ALUMINUM	142 J		220 J		2670 J		468 J	
ARSENIC	0.21 U		1 J		1.3 J		0.69 J	
BARIUM	83.5 J		64.4 J		107 J		114 J	
CALCIUM	29200 J		39100 J		89700 J		38100 J	
CHROMIUM	0.47 U		1.6 U		4 J		0.86 U	
COBALT	0.11 U		0.23 U		0.97 J		5.8 J	
COPPER	1.4 J		3.6 J		2.4 J		2.9 J	
IRON	91.4 U		143 U		2070 J		922 J	
LEAD	0.2 U		0.31 U		1.4 J		1.9 J	
MAGNESIUM	8910 J		10100 J		11600 J		8750 U	
MANGANESE	5.8 J		15.6 J		49.1 J		3910 J	
NICKEL	1.2		1.9		3.1		8.7	
POTASSIUM	15300 J		38200 J		2880 J		2730 J	
SODIUM	9370 J		10400 J		16000 J		20000 J	
TITANIUM	1.5 J		2 J		32.4		8	
VANADIUM	0.35 U		0.98 J		5.4 J		1.5 J	
Dissolved Inorganics (ug/L)								
ALUMINUM		17.7 U		25.1 U		30.2 U		16.1 U
ARSENIC		0.23 U		1.1 J		0.16 U		0.23 U
BARIUM		55.3 J		62.7 J		91.7 J		72.6 J
CALCIUM		53700 J		39500 J		87900 J		38900 J
CHROMIUM		0.76 U		0.48 U		0.38 U		0.34 U
COBALT		1.3 J		3 J		3 J		3.6 J
COPPER		0.87 J		3.2 J		0.7 J		0.69 J
IRON		8.7 U		17.9 U		20.3 U		25.1 U
LEAD		0.16 U		0.17 U		0.06 U		0.07 U

APPENDIX A
POSITIVE HITS TABLE
SEEPS - ROUND 2
SWMU 13 - MINE FILL B
NSWC CRANE, INDIANA

LOCATION	13SP01	13SP01	13SP02	13SP02	13SP03	13SP03	13SP04	13SP04
NSAMPLE	13SP0101	13SP0101-F	13SP0201	13SP0201-F	13SP0301	13SP0301-F	13SP0401	13SP0401-F
SAMPLE	13SP0101	13SP0101-F	13SP0201	13SP0201-F	13SP0301	13SP0301-F	13SP0401	13SP0401-F
MATRIX	SP	SP	SP	SP	SP	SP	SP	SP
DEPH RANGE	---	---	---	---	---	---	---	---
SAMPLE DATE	10/22/2003	10/22/2003	10/22/2003	10/22/2003	10/22/2003	10/22/2003	10/22/2003	10/22/2003
VALIDATED	Y	Y	Y	Y	Y	Y	Y	Y
COLLECTION METHOD	GRAB	GRAB	GRAB	GRAB	GRAB	GRAB	GRAB	GRAB
MAGNESIUM		9970 J		10900 J		12900 J		8370 J
MANGANESE		2.7 U		7.8 J		18.9 J		1090 J
NICKEL		0.46 J		1.8		1 J		4.8
POTASSIUM		4720 J		38500 J		2150 J		2300 J
SODIUM		25700 J		11400 J		18000 J		19900 J
TITANIUM		0.11 J		0.94 J		0.69 J		0.47 J
VANADIUM		0.16 U		0.57 J		0.23 U		0.13 U
Miscellaneous Parameters (mg/L)								
AMMONIA-N	0.005 UJ		0.005 UJ		0.02 J		0.005 UJ	
NITRITE/NITRATE-N	0.06 U		0.58 J		0.06 U		0.025 U	
Field Parameters								
DISSOLVED OXYGEN - METER (MG/L)	3.6		9.79		5.28		6.02	
OXIDATION REDUCTION POTENTIAL (MV)	202.6		211		227.5		283.7	
PH	6.8		7.7		7.03		6.44	
SPECIFIC CONDUCTANCE (MS/CM)	0.335		0.36		0.509		0.307	
TEMPERATURE (C)	11.81		12.16		14.54		14.08	
TURBIDITY (NTU)	2.6		5		40		0.01	

SWMU 16

SWMU 16
GROUNDWATER

APPENDIX A
POSITIVE HITS TABLE
GROUND WATER - ROUNDS 1 AND 2
SMWU 16 - B146 CAST HIGH EXPLOSIVES INCINERATOR
NSWC CRANE, INDIANA

LOCATION	16MW01	16MW01	16MW02	16MW02	16MW02	16MW03	16MW03	16MW04	16MW04	16MW04	16MW04	16MW05	16MW05	16MWT01
NSAMPLE	16GW0101	16GW0102	16GW0201	16GW0202	16GW0203	16GW0301	16GW0302	16GW0401	16GW0402	16GW0402-AVG	16GW0402-D	16GW0501	16GW0502	16GWT0101
SAMPLE	16GW0101	16GW0102	16GW0201	16GW0202	16GW0203	16GW0301	16GW0302	16GW0401	16GW0402	16GW0402-AVG	16FD10260301	16GW0501	16GW0502	16GWT0101
MATRIX	GW	GW	GW	GW	GW	GW	GW	GW	GW	GW	GW	GW	GW	GW
DEPTH RANGE	---	---	---	---	---	---	---	---	---	---	---	---	---	---
SAMPLE DATE	4/23/2003	10/26/2003	4/24/2003	5/11/2003	10/26/2003	5/11/2003	11/8/2003	4/23/2003	10/26/2003	10/26/2003	10/26/2003	4/22/2003	10/26/2003	4/22/2003
ROUND	01	02	01	01	02	01	02	01	02	'02	02	01	02	01
VALIDATED	Y	Y	Y	Y	Y	Y	Y	Y	Y	Y	Y	Y	Y	Y
COLLECTION METHOD	GRAB	GRAB	GRAB	GRAB	GRAB	GRAB	GRAB	GRAB	GRAB	GRAB	GRAB	GRAB	GRAB	GRAB
Volatile Organics (ug/L)														
1,1,2,2-TETRACHLOROETHANE	0.3 U	0.3 U	0.3 U		0.3 U	0.3 U	0.3 U	0.3 U	0.3 U	0.3 U	0.3 U	0.3 U	0.3 U	0.3 U
1,1,2-TRICHLOROETHANE	0.3 U	0.3 U	0.3 U		0.3 U	0.3 U	0.3 U	0.3 U	0.3 U	0.3 U	0.3 U	0.3 U	0.3 U	0.3 U
1,1-DICHLOROETHENE	0.3 U	0.3 U	0.3 U		0.3 U	0.3 U	0.3 U	0.3 U	0.3 U	0.3 U	0.3 U	0.3 U	0.3 U	0.3 U
2-HEXANONE	0.5 U	0.5 U	0.5 U		0.5 U	0.5 U	0.5 UJ	0.5 U	0.5 U	0.5 U	0.5 U	0.5 U	0.5 U	0.5 U
4-METHYL-2-PENTANONE	0.5 U	0.5 U	0.5 U		0.5 U	0.5 U	0.5 U	0.5 U	0.5 U	0.5 U	0.5 U	0.5 U	0.5 U	0.5 U
ACETONE	0.5 UR	0.5 UJ	0.5 UR		0.5 UJ	0.5 UR	0.5 UJ	0.5 UR	0.5 UJ	0.5 UJ	0.5 UJ	0.5 UR	0.5 UJ	1.3 J
BENZENE	0.3 U	0.3 U	0.3 U		0.3 U	0.3 U	0.3 U	0.3 U	0.3 U	0.3 U	0.3 U	0.3 U	0.3 U	0.3 U
BROMODICHLOROMETHANE	0.3 U	0.3 U	0.3 U		0.3 U	0.3 U	0.3 U	0.3 U	0.3 U	0.3 U	0.3 U	0.3 U	0.3 U	0.3 U
CARBON DISULFIDE	0.3 U	0.3 U	0.3 U		0.3 U	0.3 U	0.3 U	0.3 U	0.3 U	0.3 U	0.3 U	0.3 U	0.3 U	0.3 U
CARBON TETRACHLORIDE	0.3 U	0.3 U	0.3 U		0.3 U	15	11	0.3 U	0.3 U	0.3 U	0.3 U	0.3 U	0.3 U	0.3 U
CHLOROFORM	0.3 U	0.3 U	0.3 U		0.3 U	5.6	3.8	0.3 U	0.3 U	0.3 U	0.3 U	0.3 U	0.3 U	0.3 U
CIS-1,2-DICHLOROETHENE	0.3 U	0.3 U	0.3 U		0.3 U	0.4 J	0.5 J	0.3 J	0.3 U	0.3 U	0.3 U	0.3 U	0.3 U	1.9
ETHANE					0.062								0.032	
ETHENE					0.018								0.0093	
ETHYLBENZENE	0.3 U	0.3 U	0.3 U		0.3 U	0.3 U	0.3 U	0.3 U	0.3 U	0.3 U	0.3 U	0.3 U	0.3 U	0.3 U
METHANE					15								0.86	
METHYLENE CHLORIDE	0.3 U	0.3 U	0.3 U		0.3 U	0.3 U	0.3 U	0.3 U	0.3 U	0.3 U	0.3 U	0.3 U	0.3 U	0.3 U
PROPIONITRILE	20 U	20 U	20 U		20 U	20 UJ	20 U	20 U	20 U	20 U	20 U	20 U	20 U	20 U
TETRACHLOROETHENE	0.3 U	0.3 U	0.3 U		0.3 U	0.3 U	0.3 U	0.3 U	0.3 U	0.3 U	0.3 U	0.3 U	0.3 U	0.3 U
TOLUENE	0.3 U	0.3 U	0.3 U		0.3 U	0.3 U	0.3 U	0.3 U	0.3 U	0.3 U	0.3 U	0.3 U	0.3 U	0.3 U
TOTAL XYLENES	0.3 U	0.3 U	0.3 U		0.3 U	0.3 U	0.3 U	0.3 U	0.3 U	0.3 U	0.3 U	0.3 U	0.3 U	0.3 U
TRANS-1,2-DICHLOROETHENE	0.3 U	0.3 U	0.3 U		0.3 U	0.3 U	0.3 U	0.3 U	0.3 U	0.3 U	0.3 U	0.3 U	0.3 U	0.3 U
TRICHLOROETHENE	2	0.6 J	0.3 U		0.3 U	5.6	5	0.5 J	0.3 U	0.325 J	0.5 J	0.5 J	0.5 J	16
VINYL CHLORIDE	0.3 U	0.3 U	0.3 U		0.3 U	0.3 U	0.3 U	0.3 U	0.3 U	0.3 U	0.3 U	0.3 U	0.3 U	0.3 J
Semivolatile Organics (ug/L)														
2-METHYLNAPHTHALENE	0.05 U		0.05 U			0.05 U		0.05 U				0.05 U		
ACENAPHTHENE	0.05 U		0.05 U			0.05 U		0.05 U				0.05 U		
BENZO(B)FLUORANTHENE	0.05 U		0.05 U			0.05 U		0.05 U				0.05 U		
CHRYSENE	0.05 U		0.05 U			0.05 U		0.05 U				0.05 U		
DIETHYL PHTHALATE	1 U		1 U	1 U		1 U		1 U				1 U		
FLUORANTHENE	0.05 U		0.05 U			0.05 U		0.05 U				0.05 U		
FLUORENE	0.05 U		0.05 U			0.05 U		0.05 U				0.05 U		
PHENANTHRENE	0.05 U		0.05 U			0.05 U		0.05 U				0.05 U		
PYRENE	0.05 U		0.05 U			0.05 U		0.05 U				0.05 U		
PYRIDINE	1 U		1 U	1 U		1 U		1 U				1 U		

APPENDIX A
POSITIVE HITS TABLE
GROUND WATER - ROUNDS 1 AND 2
SMWU 16 - B146 CAST HIGH EXPLOSIVES INCINERATOR
NSWC CRANE, INDIANA

LOCATION	16MW01	16MW01	16MW02	16MW02	16MW02	16MW03	16MW03	16MW04	16MW04	16MW04	16MW04	16MW05	16MW05	16MWT01
NSAMPLE	16GW0101	16GW0102	16GW0201	16GW0202	16GW0203	16GW0301	16GW0302	16GW0401	16GW0402	16GW0402-AVG	16GW0402-D	16GW0501	16GW0502	16GWT0101
SAMPLE	16GW0101	16GW0102	16GW0201	16GW0202	16GW0203	16GW0301	16GW0302	16GW0401	16GW0402	16GW0402-AVG	16FD10260301	16GW0501	16GW0502	16GWT0101
MATRIX	GW	GW	GW	GW	GW	GW	GW	GW	GW	GW	GW	GW	GW	GW
DEPTH RANGE	---	---	---	---	---	---	---	---	---	---	---	---	---	---
SAMPLE DATE	4/23/2003	10/26/2003	4/24/2003	5/11/2003	10/26/2003	5/11/2003	11/8/2003	4/23/2003	10/26/2003	10/26/2003	10/26/2003	4/22/2003	10/26/2003	4/22/2003
ROUND	01	02	01	01	02	01	02	01	02	'02	02	01	02	01
VALIDATED	Y	Y	Y	Y	Y	Y	Y	Y	Y	Y	Y	Y	Y	Y
COLLECTION METHOD	GRAB	GRAB	GRAB	GRAB	GRAB	GRAB	GRAB	GRAB	GRAB	GRAB	GRAB	GRAB	GRAB	GRAB
Explosives (ug/L)														
2,4-DIAMINO-6-NITROTOLUENE		0.26 U			0.24 U		0.25 U		0.25 U	0.25 U	0.25 U		0.25 U	
2-AMINO-4,6-DINITROTOLUENE	0.65 U	0.26 U	0.21 U		0.24 U	0.48 J	0.62 J	0.165 U	0.25 U	0.25 U	0.25 U	0.42 U	0.25 U	
4-AMINO-2,6-DINITROTOLUENE	0.65 U	0.26 U	0.21 U		0.24 U	0.86 J	1.1	0.165 U	0.25 U	0.25 U	0.25 U	0.42 U	0.25 U	
DNX		0.26 U			0.24 U		0.25 U		0.25 U	0.25 U	0.25 U		0.25 U	
HMX	0.65 U	0.26 U	0.21 U		0.24 U	5.7	7.5	0.39	0.45 J	0.535 J	0.62	1.2 J	0.81	
MNX		0.26 U			0.24 U		0.82		0.25 U	0.25 U	0.25 U		0.25 U	
RDX	0.6 U	0.26 U	0.195 U		0.24 U	52	71	1.7	1.9	2	2.1	4.8	1.8	
Total Inorganics (ug/L)														
ALUMINUM	19.2 J	26.4 U	85.6	60.6 U	8.3 U	1050	1550 J	9680	9330 J	9350 J	9370 J	5030	4730 J	
ANTIMONY	0.06 U	0.16 U	0.10 U	0.03 U	0.02 U	0.03 U	0.02 U	0.03 U	0.14 U	0.08 U	0.02 U	0.11 U	0.02 U	
ARSENIC	2.7 J	32.1 J	0.16 U	0.33 U	0.66 J	0.10 U	0.11 U	1.5 J	1.1 J	1.04 J	0.98 J	1.6 J	1.3 J	
BARIUM	5.0 J	6.0 J	21.6 J	18.0 J	17.8 J	13.5 J	13.4 J	9.4 J	7.8 J	7.95 J	8.1 J	12.0 J	9.4 J	
BERYLLIUM	0.16 U	0.66 U	0.42 U	0.34 U	0.06 U	0.48 U	0.77 U	2.0 J	2.7 U	2.6 U	2.5 U	1.1 U	1.3 U	
CADMIUM	0.05 U	0.05 U	0.31 U	0.22 U	0.04 U	0.17 U	0.05 U	0.83 J	0.91 U	0.905 U	0.90 U	1.1 J	0.93 U	
CALCIUM	194000 J	106000 U	99400 J	97300 J	212000 J	48900 J	43200 J	66900 J	64000 J	63650 J	63300 J	72800 J	63100 J	
CHROMIUM	0.27 U	0.38 U	0.43 U	0.29 U	0.17 U	0.44 U	0.32 U	0.55 U	0.64 U	0.64 U	0.64 U	0.51 U	0.51 U	
COBALT	154 J	129 J	12.9 J	9.2 J	18.7 J	15.1 J	13.9 J	51.7 J	57.3 J	57.05 J	56.8 J	34.4 J	32.0 J	
COPPER	0.06 U	0.07 U	0.87 J	0.15 U	0.12 U	0.82 J	0.92 U	0.12 U	0.26 U	0.18 U	0.10 U	0.11 U	0.12 U	
IRON	52700 J	83900 J	287 J	415 J	13700 J	698 J	1380 J	4870 J	6580 J	6550 J	6520 J	2190 J	2820 J	
LEAD	0.03 U	0.12 U	0.21 U	0.28 U	0.18 U	0.12 U	0.28 U	0.43 U	0.53 U	0.505 U	0.48 U	0.89 J	0.70 U	
LITHIUM	328 J		32.7 J	33.6 J		33.2 J		120 J				92.7 J		
MAGNESIUM	84500 J	63100 J	6240 J	6480 J	35200 J	14000 J	12400 J	29000 J	25000 J	24950 J	24900 J	30600 J	25500 J	
MANGANESE	29300 J	12600 J	916 J	864 J	2440 J	1960 J	2160 J	3710 J	4310 J	4380 J	4450 J	2550 J	2450 J	
MERCURY	0.02 U	0.02 U	0.02 U	0.20 U	0.02 U	0.02 U	0.02 U	0.02 U	0.02 U	0.02 U	0.02 U	0.02 U	0.02 U	
NICKEL	198 J	169 J	34.2 J	27.0 J	36.7 J	43.1 J	37.5 J	186 J	195 J	194.5 J	194 J	134 J	124 J	
POTASSIUM	9390 J	8490 J	738 J	3390 U	2640 J	2780 J	2990 J	3240 J	3070 J	3080 J	3090 J	3760 J	2970 J	
SELENIUM	0.05 U	0.05 U	0.05 U	0.06 U	0.04 U	0.36 U	0.31 U	0.05 U	0.04 U	0.04 U	0.04 U	0.05 U	0.04 U	
SODIUM	25900 J	21300 J	18000 J	17900 J	20200 J	7190 J	6770 J	13400 J	11500 J	11550 J	11600 J	13500 J	10400 J	
STRONTIUM	197 J		88.4 J	98.4 J		254 J		199 J				279 J		
TIN	0.03 U	0.10 U	0.06 U	0.07 U	0.10 U	0.06 U	0.1 U	0.03 U	0.10 U	0.1 U	0.10 U	0.05 U	0.10 U	
TITANIUM	1.2 J	0.07 U	3.8 J	3.0 J	0.17 U	1.0 J	4.5 U	2.0 J	0.31 U	0.19 U	0.07 U	2.0 J	0.83 U	
VANADIUM	0.05 U	0.21 U	0.30 U	0.35 U	0.09 U	0.05 U	0.13 U	0.86 J	0.74 J	0.755 J	0.77 J	0.60 J	0.65 J	
ZINC	157 J	231 J	50.0 J	42.9 J	15.8 J	69.5 J	61.5 J	244 J	260	256.5	253	222 J	227	
Dissolved Inorganics (ug/L)														
ALUMINUM														

APPENDIX A
POSITIVE HITS TABLE
GROUND WATER - ROUNDS 1 AND 2
SMWU 16 - B146 CAST HIGH EXPLOSIVES INCINERATOR
NSWC CRANE, INDIANA

LOCATION	16MW01	16MW01	16MW02	16MW02	16MW02	16MW03	16MW03	16MW04	16MW04	16MW04	16MW04	16MW05	16MW05	16MWT01
NSAMPLE	16GW0101	16GW0102	16GW0201	16GW0202	16GW0203	16GW0301	16GW0302	16GW0401	16GW0402	16GW0402-AVG	16GW0402-D	16GW0501	16GW0502	16GWT0101
SAMPLE	16GW0101	16GW0102	16GW0201	16GW0202	16GW0203	16GW0301	16GW0302	16GW0401	16GW0402	16GW0402-AVG	16FD10260301	16GW0501	16GW0502	16GWT0101
MATRIX	GW	GW	GW	GW	GW	GW	GW	GW	GW	GW	GW	GW	GW	GW
DEPTH RANGE	---	---	---	---	---	---	---	---	---	---	---	---	---	---
SAMPLE DATE	4/23/2003	10/26/2003	4/24/2003	5/11/2003	10/26/2003	5/11/2003	11/8/2003	4/23/2003	10/26/2003	10/26/2003	10/26/2003	4/22/2003	10/26/2003	4/22/2003
ROUND	01	02	01	01	02	01	02	01	02	'02	02	01	02	01
VALIDATED	Y	Y	Y	Y	Y	Y	Y	Y	Y	Y	Y	Y	Y	Y
COLLECTION METHOD	GRAB	GRAB	GRAB	GRAB	GRAB	GRAB	GRAB	GRAB	GRAB	GRAB	GRAB	GRAB	GRAB	GRAB
ANTIMONY														
ARSENIC														
BARIUM														
BERYLLIUM														
CADMIUM														
CALCIUM														
CHROMIUM														
COBALT														
COPPER														
IRON														
LEAD														
MAGNESIUM														
MANGANESE														
MERCURY														
NICKEL														
POTASSIUM														
SELENIUM														
SODIUM														
TIN														
TITANIUM														
VANADIUM														
ZINC														
Miscellaneous Parameters (mg/L)														
AMMONIA-N	0.41		0.04			0.02		0.08				0.03		
CHLORIDE		7.0			14		5		12	12.5	13		7.0	
NITRITE/NITRATE-N	0.02 U	0.07	0.02 U		0.05 U	0.54	0.7	0.02 U	0.05 U	0.05 U	0.05 U	0.02 U	0.05 U	
SULFATE		860			270		170		430	420	410		340	
TOTAL ORGANIC CARBON					1.7									
Field Parameters														
ALKALINITY (MG/L)					300		10 U						10 U	
CARBON DIOXIDE (MG/L)					105		130						150	
DISSOLVED OXYGEN (MG/L)					0.2		1						0.25	
DISSOLVED OXYGEN - METER (MG/L)	0.32	0.7	0.64	1.18	6.3	1.63	0.74	0.29	0.54	0.54		0.9	0.28	4.51
FERROUS IRON (MG/L)					3.3 >		0.54						2.91	
HYDROGEN SULFIDE (H2S) (MG/L)					0		0						0	
MANGANESE (MG/L)					1.5		2.1						2.7	

APPENDIX A
POSITIVE HITS TABLE
GROUND WATER - ROUNDS 1 AND 2
SMWU 16 - B146 CAST HIGH EXPLOSIVES INCINERATOR
NSWC CRANE, INDIANA

LOCATION	16MW01	16MW01	16MW02	16MW02	16MW02	16MW03	16MW03	16MW04	16MW04	16MW04	16MW04	16MW05	16MW05	16MWT01
NSAMPLE	16GW0101	16GW0102	16GW0201	16GW0202	16GW0203	16GW0301	16GW0302	16GW0401	16GW0402	16GW0402-AVG	16GW0402-D	16GW0501	16GW0502	16GWT0101
SAMPLE	16GW0101	16GW0102	16GW0201	16GW0202	16GW0203	16GW0301	16GW0302	16GW0401	16GW0402	16GW0402-AVG	16FD10260301	16GW0501	16GW0502	16GWT0101
MATRIX	GW	GW	GW	GW	GW	GW	GW	GW	GW	GW	GW	GW	GW	GW
DEPTH RANGE	---	---	---	---	---	---	---	---	---	---	---	---	---	---
SAMPLE DATE	4/23/2003	10/26/2003	4/24/2003	5/11/2003	10/26/2003	5/11/2003	11/8/2003	4/23/2003	10/26/2003	10/26/2003	10/26/2003	4/22/2003	10/26/2003	4/22/2003
ROUND	01	02	01	01	02	01	02	01	02	'02	02	01	02	01
VALIDATED	Y	Y	Y	Y	Y	Y	Y	Y	Y	Y	Y	Y	Y	Y
COLLECTION METHOD	GRAB	GRAB	GRAB	GRAB	GRAB	GRAB	GRAB	GRAB	GRAB	GRAB	GRAB	GRAB	GRAB	GRAB
NITRITE-N (MG/L)					0.003		0.007						0.005	
OXIDATION REDUCTION POTENTIAL (MV)	-130	-5	7.1	-46.1	-0.8	154.2	350	207.4	328.7	328.7		152	263	63.1
PH	6.4	6.17	6.65	6.69	6.54	5.84	4.82	3.68	3.65	3.65		4.38	4.77	6.51
SPECIFIC CONDUCTANCE (MS/CM)	1.606	1.452	0.568	0.496	1.75	0.483	0.355	0.72	0.735	0.735		0.625	0.587	1.061
SULFIDE (MG/L)					0		0.01						0.1	
TEMPERATURE (C)	13.79	12.72	11.8	12.84	15.27	14.17	13.62	13.31	13.21	13.21		12.95	13.39	13.01
TURBIDITY (NTU)	0.05	0.61	2.2	0.4	0.8	2.8	1.06	0.5	0.13	0.13		0	1.96	999 >

APPENDIX A
POSITIVE HITS TABLE
GROUND WATER - ROUNDS 1 AND 2
SMWU 16 - B146 CAST HIGH EXPLOSIVES INCINERATOR
NSWC CRANE, INDIANA

LOCATION	16MWT01	16MWT02	16MWT02	16MWT03	16MWT03	16MWT03	16MWT04	16MWT04	16MWT05	16MWT05	16MWT05	16MWT05	16MWT06
NSAMPLE	16GWT0102	16GWT0201	16GWT0202	16GWT0301	16GWT0302	16GWT0302-F	16GWT0401	16GWT0402	16GWT0501	16GWT0501-AVG	16GWT0501-D	16GWT0502	16GWT0601
SAMPLE	16GWT0102	16GWT0201	16GWT0202	16GWT0301	16GWT0302	16GWT0302-F	16GWT0401	16GWT0402	16GWT0501	16GWT0501-AVG	FD04240301	16GWT0502	16GWT0601
MATRIX	GW	GW	GW	GW	GW	GF	GW	GW	GW	GW	GW	GW	GW
DEPTH RANGE	---	---	---	---	---	---	---	---	---	---	---	---	---
SAMPLE DATE	11/9/2003	4/22/2003	10/26/2003	4/25/2003	11/9/2003	11/9/2003	4/22/2003	11/8/2003	4/24/2003	4/24/2003	4/24/2003	11/22/2003	4/28/2003
ROUND	02	01	02	01	02	02	01	02	01	01	01	02	01
VALIDATED	Y	Y	Y	Y	Y	Y	Y	Y	Y	Y	Y	Y	Y
COLLECTION METHOD	GRAB	GRAB	GRAB	GRAB	GRAB	GRAB	GRAB	GRAB	GRAB	GRAB	GRAB	GRAB	GRAB
Volatile Organics (ug/L)													
1,1,2,2-TETRACHLOROETHANE	0.3 U	0.3 U	0.3 U	0.3 U	0.3 U		0.3 U	0.3 U	0.3 U	0.3 U	0.3 U	0.3 U	0.3 UJ
1,1,2-TRICHLOROETHANE	0.3 U	0.3 U	0.3 U	0.3 U	0.3 U		0.3 U	0.3 U	0.3 U	0.3 U	0.3 U	0.3 U	38 J
1,1-DICHLOROETHENE	0.3 U	0.3 U	0.3 U	0.3 U	0.3 U		0.3 U	0.3 U	0.3 U	0.3 U	0.3 U	0.3 U	26 J
2-HEXANONE	0.5 U	0.5 U	0.5 U	0.5 UJ	0.5 U		0.5 U	0.5 U	0.5 U	0.5 U	0.5 U	0.5 UJ	0.5 UJ
4-METHYL-2-PENTANONE	0.5 U	0.5 U	0.5 U	0.5 U	0.5 U		0.5 U	0.5 U	0.5 U	0.5 U	0.5 U	0.5 U	3.5 J
ACETONE	0.5 UJ	0.5 UR	0.5 UJ	0.5 UR	0.5 UJ		0.5 UR	0.5 UJ	0.5 UR	0.5 UR	0.5 UR	0.5 UR	10 U
BENZENE	0.3 U	0.3 U	0.3 U	0.3 U	0.3 U		0.3 U	0.3 U	0.3 U	0.3 U	0.3 U	0.3 U	0.9 J
BROMODICHLOROMETHANE	0.3 U	0.3 U	0.3 U	0.3 U	0.3 U		0.3 U	0.3 U	0.3 U	0.3 U	0.3 U	0.3 U	0.8 J
CARBON DISULFIDE	0.3 U	0.3 U	0.3 U	0.3 U	0.3 U		0.3 U	0.3 U	0.3 U	0.3 U	0.3 U	0.3 U	0.8 J
CARBON TETRACHLORIDE	0.3 U	0.3 U	0.3 U	0.3 U	0.3 U		0.3 U	0.3 U	0.3 U	0.3 U	0.3 U	0.3 U	0.3 UJ
CHLOROFORM	0.3 U	0.3 U	0.3 U	0.3 U	0.3 U		0.3 U	0.3 U	0.3 U	0.3 U	0.3 U	0.3 U	12 J
CIS-1,2-DICHLOROETHENE	42	0.3 U	0.8 J	0.3 U	0.3 U		0.3 U	0.3 U	0.3 U	0.3 U	0.3 U	0.3 U	600
ETHANE								0.013					
ETHENE								0.027					
ETHYLBENZENE	0.3 U	0.3 U	0.3 U	0.3 U	0.3 U		0.3 U	0.3 U	0.3 U	0.3 U	0.3 U	0.3 U	0.3 UJ
METHANE								0.93					
METHYLENE CHLORIDE	0.3 U	0.3 U	0.3 U	0.3 U	0.3 U		0.3 U	0.3 U	0.3 U	0.3 U	0.3 U	0.3 UJ	0.3 U
PROPIONITRILE	20 U	20 U	20 U	20 UJ	20 U		20 U	20 U	20 UJ	20 UJ	20 UJ	20 U	20 U
TETRACHLOROETHENE	0.3 U	0.3 U	0.3 U	0.3 U	0.3 U		0.3 U	0.3 U	0.3 U	0.3 U	0.3 U	0.3 U	13 J
TOLUENE	0.3 U	0.3 U	0.3 U	0.3 U	0.3 U		0.3 U	0.3 U	0.3 U	0.3 U	0.3 U	0.3 U	32 J
TOTAL XYLENES	0.3 U	0.3 U	0.3 U	0.3 U	0.3 U		0.3 U	0.3 U	0.3 U	0.3 U	0.3 U	0.3 U	0.3 UJ
TRANS-1,2-DICHLOROETHENE	0.3 U	0.3 U	0.3 U	0.3 U	0.3 U		0.3 U	0.3 U	0.3 U	0.3 U	0.3 U	0.3 U	3.1 J
TRICHLOROETHENE	230	1.2	6.5	0.3 U	0.7 J		2.2	3.9	0.3 U	0.3 U	0.3 U	0.3 U	35000
VINYL CHLORIDE	0.3 U	0.3 U	0.3 U	0.3 U	0.3 U		0.3 U	0.3 U	0.3 U	0.3 U	0.3 U	0.3 U	65 J
Semivolatile Organics (ug/L)													
2-METHYLNAPHTHALENE		0.05 U		0.05 U			0.05 U		0.05 U	0.05 U	0.05 U		0.11
ACENAPHTHENE		0.05 U		0.05 U			0.05 U		0.05 U	0.05 U	0.05 U		0.07 J
BENZO(B)FLUORANTHENE		0.05 U		0.05 U			0.05 U		0.05 U	0.05 U	0.05 U		0.09 J
CHRYSENE		0.05 U		0.05 U			0.05 U		0.05 U	0.05 U	0.05 U		0.1 J
DIETHYL PHTHALATE		1 U		1 U			1 U		1 U	1 U	1 U		1 J
FLUORANTHENE		0.05 U		0.05 U			0.05 U		0.05 U	0.05 U	0.05 U		0.11
FLUORENE		0.05 U		0.05 U			0.05 U		0.05 U	0.05 U	0.05 U		0.1 J
PHENANTHRENE		0.05 U		0.05 U			0.05 U		0.05 U	0.05 U	0.05 U		0.54
PYRENE		0.05 U		0.05 U			0.05 U		0.05 U	0.05 U	0.05 U		0.2
PYRIDINE		1 U		1 U			1 U		1 U	1 U	1 U		1 U

APPENDIX A
POSITIVE HITS TABLE
GROUND WATER - ROUNDS 1 AND 2
SMWU 16 - B146 CAST HIGH EXPLOSIVES INCINERATOR
NSWC CRANE, INDIANA

LOCATION	16MWT01	16MWT02	16MWT02	16MWT03	16MWT03	16MWT03	16MWT04	16MWT04	16MWT05	16MWT05	16MWT05	16MWT05	16MWT06
NSAMPLE	16GWT0102	16GWT0201	16GWT0202	16GWT0301	16GWT0302	16GWT0302-F	16GWT0401	16GWT0402	16GWT0501	16GWT0501-AVG	16GWT0501-D	16GWT0502	16GWT0601
SAMPLE	16GWT0102	16GWT0201	16GWT0202	16GWT0301	16GWT0302	16GWT0302-F	16GWT0401	16GWT0402	16GWT0501	16GWT0501-AVG	FD04240301	16GWT0502	16GWT0601
MATRIX	GW	GW	GW	GW	GW	GF	GW	GW	GW	GW	GW	GW	GW
DEPTH RANGE	---	---	---	---	---	---	---	---	---	---	---	---	---
SAMPLE DATE	11/9/2003	4/22/2003	10/26/2003	4/25/2003	11/9/2003	11/9/2003	4/22/2003	11/8/2003	4/24/2003	4/24/2003	4/24/2003	11/22/2003	4/28/2003
ROUND	02	01	02	01	02	02	01	02	01	01	01	02	01
VALIDATED	Y	Y	Y	Y	Y	Y	Y	Y	Y	Y	Y	Y	Y
COLLECTION METHOD	GRAB	GRAB	GRAB	GRAB	GRAB	GRAB	GRAB	GRAB	GRAB	GRAB	GRAB	GRAB	GRAB
Explosives (ug/L)													
2,4-DIAMINO-6-NITROTOLUENE			0.26 U		0.255 U			0.255 U				0.263 U	
2-AMINO-4,6-DINITROTOLUENE		0.385 U	0.26 U	0.5 U	0.255 UJ		0.55 U	0.47 J	0.375 U	0.255 U	0.135 U	0.263 U	0.34 U
4-AMINO-2,6-DINITROTOLUENE		0.385 U	0.26 U	0.5 U	0.255 U		0.55 U	1 J	0.375 U	0.255 U	0.135 U	0.263 U	0.34 U
DNX			0.26 U		0.255 U			0.63 J				0.263 U	
HMX		0.385 U	0.26 U	0.5 U	0.255 U		7.8	21	0.375 U	0.255 U	0.135 U	0.263 U	0.34 U
MNX			0.26 U		0.255 U			4.1				0.263 U	
RDX		0.79	0.26 U	0.48 U	0.255 U		77	200	0.355 U	0.2425 U	0.13 U	0.263 U	4
Total Inorganics (ug/L)													
ALUMINUM		168	29.1 U	140	29200 J		1050	554 J	6020	6070	6120	6650 J	222 J
ANTIMONY		0.89 U	0.31 U	0.11 U	0.25 U		1.4 U	1.5 U	0.08 U	0.06 U	0.04 U	0.02 U	2.4 U
ARSENIC		0.81 J	1.2 J	1.6 J	6.6 J		0.41 U	0.1 U	3.5 J	3.4 J	3.3 J	1.5 U	4.5 J
BARIUM		107 J	88.3 J	18.1 J	139 J		68.7 J	71.2 J	14.2 J	14.45 J	14.7 J	9.7 J	36.9 J
BERYLLIUM		0.06 U	0.07 U	0.28 U	1.1 U		0.16 U	0.25 U	4.7 J	4.45 J	4.2 J	4.6 J	0.03 U
CADMIUM		0.13 U	0.09 U	0.20 U	0.1 U		0.16 U	0.04 U	0.21 U	0.215 U	0.22 U	0.17 U	0.05 UJ
CALCIUM		47200 J	39900 J	39500 J	45600 J		22600 J	32600 J	57000 J	56900 J	56800 J	62100 J	96800 J
CHROMIUM		0.56 U	0.30 U	0.41 U	16.7 J		0.68 J	0.31 U	0.58 U	0.51 J	0.73 J	0.53 U	0.93 J
COBALT		3.9 J	7.0 J	40.9 J	37.3 J		7.1 J	9.7 J	92.1 J	92.75 J	93.4 J	77.2 J	2.0 J
COPPER		2.8 J	1.1 U	2.1 J	6.1 J		3.4 J	1.2 U	1.4 J	1.45 J	1.5 J	0.32 U	4.9 J
IRON		5850 J	7490 J	39400 J	79600 J		568 J	3180 J	29700 J	30050 J	30400 J	30600 J	171 J
LEAD		0.51 U	0.44 U	1.1 J	15.5 J		0.43 U	0.28 U	1.8 J	1.85 J	1.9 J	0.57 U	0.40 U
LITHIUM		0.72 U		101 J			8.5 J		310 J	314 J	318 J		21.9 J
MAGNESIUM		10900 J	9120 J	25000 J	33600 J		8270 J	10400 J	27200 J	27550 J	27900 J	31600 J	19700 J
MANGANESE		2590 J	5830 J	3930 J	4500 J		353 J	962 J	6510 J	6595 J	6680 J	7030 J	482 J
MERCURY		0.02 U	0.02 U	0.02 U	0.02 U		0.02 U	0.02 U	0.02 U	0.02 U	0.02 U	0.007 U	0.02 U
NICKEL		1.5 J	3.3 J	93.4 J	86.3 J		21.1 J	24.9 J	304 J	302.5 J	301 J	284 J	8.1 J
POTASSIUM		1400 J	1790 J	4260 J	6300 J		1360 J	1530 J	3590 J	3625 J	3660 J	3100 J	11900 J
SELENIUM		0.20 U	0.11 U	0.32 U	0.48 U		0.43 U	0.04 U	0.19 U	0.19 U	0.19 U	0.04 U	1.2 J
SODIUM		26900 J	31900 J	26700 J	33100 J		18200 J	12000 J	14300 J	14500 J	14700 J	13800 J	37100 J
STRONTIUM		387 J		158 J			278 J		106 J	107.5 J	109 J		186 J
TIN		0.13 U	0.12 U	0.06 U	0.48 U		0.24 U	0.1 U	0.03 U	0.04 U	0.05 U	0.1 U	0.08 U
TITANIUM		4.3 J	0.45 U	2.9 J	95.1 J		8.4 J	1.7 U	3.2 J	3.15 J	3.1 J	1.5 U	4.0 J
VANADIUM		0.36 U	0.12 U	0.14 U	15.7 J		0.51 J	0.16 U	0.60 J	0.59 J	0.58 J	1.7 U	0.80 J
ZINC		31.9 J	17.5 J	108 J	86.1 J		15.9 J	42.5 J	329 J	311.5 J	294 J	254 J	6.2 J
Dissolved Inorganics (ug/L)													
ALUMINUM						33 U							

APPENDIX A
POSITIVE HITS TABLE
GROUND WATER - ROUNDS 1 AND 2
SMWU 16 - B146 CAST HIGH EXPLOSIVES INCINERATOR
NSWC CRANE, INDIANA

LOCATION	16MWT01	16MWT02	16MWT02	16MWT03	16MWT03	16MWT03	16MWT04	16MWT04	16MWT05	16MWT05	16MWT05	16MWT05	16MWT06
NSAMPLE	16GWT0102	16GWT0201	16GWT0202	16GWT0301	16GWT0302	16GWT0302-F	16GWT0401	16GWT0402	16GWT0501	16GWT0501-AVG	16GWT0501-D	16GWT0502	16GWT0601
SAMPLE	16GWT0102	16GWT0201	16GWT0202	16GWT0301	16GWT0302	16GWT0302-F	16GWT0401	16GWT0402	16GWT0501	16GWT0501-AVG	FD04240301	16GWT0502	16GWT0601
MATRIX	GW	GW	GW	GW	GW	GF	GW	GW	GW	GW	GW	GW	GW
DEPTH RANGE	---	---	---	---	---	---	---	---	---	---	---	---	---
SAMPLE DATE	11/9/2003	4/22/2003	10/26/2003	4/25/2003	11/9/2003	11/9/2003	4/22/2003	11/8/2003	4/24/2003	4/24/2003	4/24/2003	11/22/2003	4/28/2003
ROUND	02	01	02	01	02	02	01	02	01	01-	01	02	01
VALIDATED	Y	Y	Y	Y	Y	Y	Y	Y	Y	Y	Y	Y	Y
COLLECTION METHOD	GRAB	GRAB	GRAB	GRAB	GRAB	GRAB	GRAB	GRAB	GRAB	GRAB	GRAB	GRAB	GRAB
ANTIMONY						0.11 U							
ARSENIC						1.2 U							
BARIUM						12.9 J							
BERYLLIUM						0.17 U							
CADMIUM						0.04 U							
CALCIUM						38900 J							
CHROMIUM						0.26 U							
COBALT						36.9 J							
COPPER						0.49 U							
IRON						43200 J							
LEAD						0.15 U							
MAGNESIUM						27200 J							
MANGANESE						4030 J							
MERCURY						0.02 U							
NICKEL						80.6 J							
POTASSIUM						3920 J							
SELENIUM						0.05 U							
SODIUM						29000 J							
TIN						0.1 U							
TITANIUM						2.3 U							
VANADIUM						0.06 U							
ZINC						67 J							
Miscellaneous Parameters (mg/L)													
AMMONIA-N		0.53		0.33			0.03		0.32	0.325	0.33		0.57
CHLORIDE			83		9			10				2 U	
NITRITE/NITRATE-N		0.03	0.05 U	0.02 U	0.025 U		0.6	0.49	0.02 U	0.02 U	0.02 U	0.025 U	0.5
SULFATE			40		290			70				390 J	
TOTAL ORGANIC CARBON								1.4					
Field Parameters													
ALKALINITY (MG/L)								75					
CARBON DIOXIDE (MG/L)								19					
DISSOLVED OXYGEN (MG/L)								2					
DISSOLVED OXYGEN - METER (MG/L)	2.59	0.82	1.08	0.64	1.23		5.41	0.89	0.2	0.2		1.3	0.48
FERROUS IRON (MG/L)								5.19					
HYDROGEN SULFIDE (H2S) (MG/L)								0					
MANGANESE (MG/L)								1					

APPENDIX A
POSITIVE HITS TABLE
GROUND WATER - ROUNDS 1 AND 2
SMWU 16 - B146 CAST HIGH EXPLOSIVES INCINERATOR
NSWC CRANE, INDIANA

LOCATION	16MWT01	16MWT02	16MWT02	16MWT03	16MWT03	16MWT03	16MWT04	16MWT04	16MWT05	16MWT05	16MWT05	16MWT05	16MWT06
NSAMPLE	16GWT0102	16GWT0201	16GWT0202	16GWT0301	16GWT0302	16GWT0302-F	16GWT0401	16GWT0402	16GWT0501	16GWT0501-AVG	16GWT0501-D	16GWT0502	16GWT0601
SAMPLE	16GWT0102	16GWT0201	16GWT0202	16GWT0301	16GWT0302	16GWT0302-F	16GWT0401	16GWT0402	16GWT0501	16GWT0501-AVG	FD04240301	16GWT0502	16GWT0601
MATRIX	GW	GW	GW	GW	GW	GF	GW	GW	GW	GW	GW	GW	GW
DEPTH RANGE	---	---	---	---	---	---	---	---	---	---	---	---	---
SAMPLE DATE	11/9/2003	4/22/2003	10/26/2003	4/25/2003	11/9/2003	11/9/2003	4/22/2003	11/8/2003	4/24/2003	4/24/2003	4/24/2003	11/22/2003	4/28/2003
ROUND	02	01	02	01	02	02	01	02	01	01	01	02	01
VALIDATED	Y	Y	Y	Y	Y	Y	Y	Y	Y	Y	Y	Y	Y
COLLECTION METHOD	GRAB	GRAB	GRAB	GRAB	GRAB	GRAB	GRAB	GRAB	GRAB	GRAB	GRAB	GRAB	GRAB
NITRITE-N (MG/L)								0.004					
OXIDATION REDUCTION POTENTIAL (MV)	177	-7.1	273.2	35	129.9		79.7	152	185	185		210	-106
PH	5.97	6.33	5.76	5.23	5.46		6.28	5.84	4.42	4.42		4.38	7.7
SPECIFIC CONDUCTANCE (MS/CM)	2.322	0.4	0.391	0.607	0.536		0.225	0.582	0.684	0.684		0.663	0.516
SULFIDE (MG/L)								0					
TEMPERATURE (C)	15.05	11.51	14.81	12.26	12.35		12.41	15.73	14.47	14.47		15.85	15
TURBIDITY (NTU)	85.7	3.4	6.7	10	49		9.2	2.2	6.8	6.8		7.72	8.8

APPENDIX A
POSITIVE HITS TABLE
GROUND WATER - ROUNDS 1 AND 2
SMWU 16 - B146 CAST HIGH EXPLOSIVES INCINERATOR
NSWC CRANE, INDIANA

LOCATION	16MWT06	16MWT06	16MWT08	16MWT09	16MWT10	16MWT11	16MWT11	16MWT12	16MWT12	16MWT12	16MWT13	16MWT13	16MWT15
NSAMPLE	16GWT0602	16GWT0603	16GWT0801	16GWT0901	16GWT1001	16GWT1101	16GWT1101-F	16GWT1201	16GWT1201-AVG	16GWT1201-D	16GWT1301	16GWT1301-F	16GWT1501
SAMPLE	16GWT0602	16GWT0603	16GWT0801	16GWT0901	16GWT1001	16GWT1101	16GWT1101-F	16GWT1201	16GWT1201-AVG	16FD11210301	16GWT1301	16GWT1301-F	16GWT1501
MATRIX	GW	GW	GW	GW	GW	GW	GF	GW	GW	GW	GW	GF	GW
DEPTH RANGE	---	---	---	---	---	---	---	---	---	---	---	---	---
SAMPLE DATE	5/11/2003	11/8/2003	12/6/2003	11/22/2003	11/21/2003	12/6/2003	12/7/2003	11/21/2003	11/21/2003	11/21/2003	11/22/2003	11/22/2003	12/6/2003
ROUND	01	02	02	02	02	02	02	02	02	02	02	02	02
VALIDATED	Y	Y	Y	Y	Y	Y	Y	Y	Y	Y	Y	Y	Y
COLLECTION METHOD	GRAB	GRAB	GRAB	GRAB	GRAB	GRAB	GRAB	GRAB	GRAB	GRAB	GRAB	GRAB	GRAB
Volatile Organics (ug/L)													
1,1,2,2-TETRACHLOROETHANE		1.6 J	0.3 U	0.3 U	0.3 U	0.3 U		0.3 U	0.3 U	0.3 U	30 U		0.3 U
1,1,2-TRICHLOROETHANE		220 J	0.3 U	0.3 U	0.3 U	0.3 U		0.3 U	0.3 U	0.3 U	81 J		0.3 U
1,1-DICHLOROETHENE		120	0.3 U	0.3 U	0.3 U	0.3 U		0.3 U	0.3 U	0.3 U	30 U		0.3 U
2-HEXANONE		16 J	0.5 U	0.5 UJ	0.5 UJ	0.5 U		0.5 UJ	0.5 UJ	0.5 UJ	50 UJ		0.5 U
4-METHYL-2-PENTANONE		7.1	0.5 U	0.5 U	0.5 U	0.5 U		0.5 U	0.5 U	0.5 U	50 U		0.5 U
ACETONE		18 J	3.7 J	0.5 UR	0.5 UR	0.8 J		0.5 UR	0.5 UR	0.5 UR	50 UR		1.6 J
BENZENE		3.3	0.3 U	0.3 U	0.3 U	0.3 U		0.3 U	0.3 U	0.3 U	30 U		0.7 J
BROMODICHLOROMETHANE		0.3 U	0.3 U	0.3 U	0.3 U	0.3 U		0.3 U	0.3 U	0.3 U	30 U		0.3 U
CARBON DISULFIDE		4.3	0.3 U	0.3 U	0.3 U	0.3 U		0.3 U	0.3 U	0.3 U	30 U		0.3 U
CARBON TETRACHLORIDE		0.8 J	0.3 U	0.3 U	0.3 U	0.3 U		0.3 U	0.3 U	0.3 U	30 U		0.3 U
CHLOROFORM		10	15	0.9 J	3.4	16		0.3 U	0.3 U	0.3 U	30 U		4
CIS-1,2-DICHLOROETHENE		4200	0.3 U	0.2 J	0.2 J	0.3 U		0.3 U	0.3 U	0.3 U	280		0.3 U
ETHANE		7.7			0.33			0.37 J	0.25 J	0.13 J	0.45		1
ETHENE		65			0.16			0.031 J	0.053 J	0.075 J	0.67		0.22
ETHYLBENZENE		2.6	0.3 U	0.3 U	0.3 U	0.3 U		0.3 U	0.3 U	0.3 U	30 U		0.3 U
METHANE		280			19			11	10.5	10	0.032		4500
METHYLENE CHLORIDE		0.3 U	0.6 J	0.3 UJ	0.3 UJ	0.3 U		0.3 UJ	0.3 UJ	0.3 UJ	59 J		0.3 U
PROPIONITRILE		20 U	20 U	20 U	20 U	20 U		20 U	20 U	20 U	20 U		26 J
TETRACHLOROETHENE		160	0.3 U	0.3 U	0.3 U	0.3 U		0.3 U	0.3 U	0.3 U	30 U		0.3 U
TOLUENE		270 J	0.3 U	0.3 U	0.3 U	0.3 U		0.3 U	0.3 U	0.3 U	30 U		0.3 U
TOTAL XYLENES		3.5	0.3 U	0.3 U	0.3 U	0.3 U		0.3 U	0.3 U	0.3 U	30 U		0.3 U
TRANS-1,2-DICHLOROETHENE		22	0.3 U	0.3 U	0.3 U	0.3 U		0.3 U	0.3 U	0.3 U	30 U		0.3 U
TRICHLOROETHENE		250000	0.3 U	7.6	1.9	0.3 U		0.3 U	0.3 U	0.3 U	62000		0.3 U
VINYL CHLORIDE		340 J	0.3 U	0.3 U	0.3 U	0.3 U		0.3 U	0.3 U	0.3 U	30 U		0.3 U
Semivolatile Organics (ug/L)													
2-METHYLNAPHTHALENE													
ACENAPHTHENE													
BENZO(B)FLUORANTHENE													
CHRYSENE													
DIETHYL PHTHALATE	1 U												
FLUORANTHENE													
FLUORENE													
PHENANTHRENE													
PYRENE													
PYRIDINE	9												

APPENDIX A
POSITIVE HITS TABLE
GROUND WATER - ROUNDS 1 AND 2
SMWU 16 - B146 CAST HIGH EXPLOSIVES INCINERATOR
NSWC CRANE, INDIANA

LOCATION	16MWT06	16MWT06	16MWT08	16MWT09	16MWT10	16MWT11	16MWT11	16MWT12	16MWT12	16MWT12	16MWT13	16MWT13	16MWT15
NSAMPLE	16GWT0602	16GWT0603	16GWT0801	16GWT0901	16GWT1001	16GWT1101	16GWT1101-F	16GWT1201	16GWT1201-AVG	16GWT1201-D	16GWT1301	16GWT1301-F	16GWT1501
SAMPLE	16GWT0602	16GWT0603	16GWT0801	16GWT0901	16GWT1001	16GWT1101	16GWT1101-F	16GWT1201	16GWT1201-AVG	16FD11210301	16GWT1301	16GWT1301-F	16GWT1501
MATRIX	GW	GW	GW	GW	GW	GW	GF	GW	GW	GW	GW	GF	GW
DEPTH RANGE	---	---	---	---	---	---	---	---	---	---	---	---	---
SAMPLE DATE	5/11/2003	11/8/2003	12/6/2003	11/22/2003	11/21/2003	12/6/2003	12/7/2003	11/21/2003	11/21/2003	11/21/2003	11/22/2003	11/22/2003	12/6/2003
ROUND	01	02	02	02	02	02	02	02	02	02	02	02	02
VALIDATED	Y	Y	Y	Y	Y	Y	Y	Y	Y	Y	Y	Y	Y
COLLECTION METHOD	GRAB	GRAB	GRAB	GRAB	GRAB	GRAB	GRAB	GRAB	GRAB	GRAB	GRAB	GRAB	GRAB
Explosives (ug/L)													
2,4-DIAMINO-6-NITROTOLUENE		0.27 J	0.26 U	0.272 U	0.287 U	0.248 UJ		0.269 U	0.2735 U	0.278 U	0.275 U		0.248 U
2-AMINO-4,6-DINITROTOLUENE		4.2 J	0.26 U	0.31 J	0.287 U	0.248 UJ		0.269 U	0.2735 U	0.278 U	0.275 U		0.248 U
4-AMINO-2,6-DINITROTOLUENE		1.5	0.26 U	0.69 J	0.287 U	0.248 UJ		0.269 U	0.2735 U	0.278 U	0.275 U		0.248 U
DNX		0.25 U	0.26 U	0.272 U	0.287 U	0.248 UJ		0.269 U	0.2735 U	0.278 U	0.275 U		0.248 U
HMX		0.27 J	0.26 U	11	6.7	0.248 UJ		1.3 J	0.7195 J	0.278 UJ	0.275 U		0.248 U
MNX		0.25 U	0.26 U	1.1	0.5 J	0.248 UJ		0.269 U	0.2735 U	0.278 U	0.275 U		0.248 U
RDX		1.8	0.26 U	110	55	0.248 UJ		0.269 U	0.2735 U	0.278 U	6.7		0.248 U
Total Inorganics (ug/L)													
ALUMINUM		1060 J	296000 J	1050 J	5810 J	77200 J		6740 J	6775 J	6810 J	2290 J		2930 J
ANTIMONY		0.26 U	1.2 U	0.03 U	0.02 U	6.3 J		0.04 U	0.03 U	0.02 U	0.13 U		1.3 U
ARSENIC		1.5 J	29.2 J	0.65 U	1.5 U	11.8 J		2.3 J	2.25 J	2.2 J	1.9 U		1.5 U
BARIUM		49.5 J	1700 J	28 J	15.7 J	1170 J		17.5 J	17.55 J	17.6 J	71.2 J		262 J
BERYLLIUM		0.07 U	15.1 J	0.78 U	1.9 J	4.8 J		3.5 J	3.5 J	3.5 J	1.3 U		0.15 U
CADMIUM		0.04 U	1.4 U	0.22 U	1.2 U	0.34 U		1.4 U	1.4 U	1.4 U	0.61 U		0.08 U
CALCIUM		101000 J	19700 U	33300 J	85100 J	12700 J		45600 J	45800 J	46000 J	94100 J		10000 J
CHROMIUM		3.5 J	452 J	0.42 U	1.3 U	84.9 J		0.68 U	0.61 U	0.54 U	5.5 J		5.1 J
COBALT		49.5 J	95.7 J	44.3 J	131 J	31.3 J		113 J	114.5 J	116 J	62.1 J		0.71 U
COPPER		0.85 U	86.1 J	5.8 J	12.4 J	33.1 J		2.8 J	2.75 J	2.7 J	7.3 J		4.5 J
IRON		1240 J	241000 J	15800 J	50200 J	46200 J		28000 J	27800 J	27600 J	9220 J		1110 J
LEAD		0.55 U	127 J	2.6 J	6.6 J	34.2 J		2.4 J	2.3 J	2.2 J	4.4 J		2 U
LITHIUM													
MAGNESIUM		72800 J	36700 J	17100 J	78800 J	9370 J		32700 J	32900 J	33100 J	12400 J		3130 J
MANGANESE		3210 J	3800 J	4350 J	24600 J	991 J		8120 J	8230 J	8340 J	3600 J		33.6 J
MERCURY		0.02 U	0.12 J	0.007 U	0.007 U	0.028 J		0.007 U	0.007 U	0.007 U	0.007 U		0.007 U
NICKEL		119 J	338 J	87.8 J	219 J	84.7 J		312 J	315.5 J	319 J	212 J		3 J
POTASSIUM		8440 J	74400 J	3300 J	4060 J	13900 J		3610 J	3640 J	3670 J	7850 J		5170 J
SELENIUM		1.4 U	5 J	0.33 U	0.43 U	2.8 J		0.9 U	0.88 U	0.86 U	0.73 U		1.4 U
SODIUM		149000 J	71300 J	16700 J	13400 J	70500 J		14300 J	14450 J	14600 J	18300 J		96200 J
STRONTIUM													
TIN		0.1 U	3.9 J	0.1 U	0.1 U	2.6 U		0.58 U	0.34 U	0.1 U	0.21 U		1.6 U
TITANIUM		35 J	1020 J	0.63 U	2.6 J	203 J		0.77 U	0.505 U	0.24 U	17.4 J		32.3 J
VANADIUM		2.2 J	410 J	0.07 U	0.3 U	80.9 J		0.46 U	0.445 U	0.43 U	4.1 J		4.4 J
ZINC		19.9 J	454 J	94.1 J	443 J	143 J		290 J	283.5 J	277 J	248 J		11.3 J
Dissolved Inorganics (ug/L)													
ALUMINUM							85.5 U					342 J	

APPENDIX A
POSITIVE HITS TABLE
GROUND WATER - ROUNDS 1 AND 2
SMWU 16 - B146 CAST HIGH EXPLOSIVES INCINERATOR
NSWC CRANE, INDIANA

LOCATION	16MWT06	16MWT06	16MWT08	16MWT09	16MWT10	16MWT11	16MWT11	16MWT12	16MWT12	16MWT12	16MWT13	16MWT13	16MWT15
NSAMPLE	16GWT0602	16GWT0603	16GWT0801	16GWT0901	16GWT1001	16GWT1101	16GWT1101-F	16GWT1201	16GWT1201-AVG	16GWT1201-D	16GWT1301	16GWT1301-F	16GWT1501
SAMPLE	16GWT0602	16GWT0603	16GWT0801	16GWT0901	16GWT1001	16GWT1101	16GWT1101-F	16GWT1201	16GWT1201-AVG	16FD11210301	16GWT1301	16GWT1301-F	16GWT1501
MATRIX	GW	GW	GW	GW	GW	GW	GF	GW	GW	GW	GW	GF	GW
DEPTH RANGE	---	---	---	---	---	---	---	---	---	---	---	---	---
SAMPLE DATE	5/11/2003	11/8/2003	12/6/2003	11/22/2003	11/21/2003	12/6/2003	12/7/2003	11/21/2003	11/21/2003	11/21/2003	11/22/2003	11/22/2003	12/6/2003
ROUND	01	02	02	02	02	02	02	02	02	02	02	02	02
VALIDATED	Y	Y	Y	Y	Y	Y	Y	Y	Y	Y	Y	Y	Y
COLLECTION METHOD	GRAB	GRAB	GRAB	GRAB	GRAB	GRAB	GRAB	GRAB	GRAB	GRAB	GRAB	GRAB	GRAB
ANTIMONY							8.8 J					0.19 U	
ARSENIC							1.3 U					0.82 U	
BARIUM							28 J					56.6 J	
BERYLLIUM							0.23 U					0.94 U	
CADMIUM							0.25 U					0.62 U	
CALCIUM							10600 J					38800 J	
CHROMIUM							0.42 U					0.4 U	
COBALT							7.5 J					58.5 J	
COPPER							1.5 U					5.4 J	
IRON							50.3 U					5230 J	
LEAD							0.6 U					1.4 U	
MAGNESIUM							2850 J					11800 J	
MANGANESE							194 J					3600 J	
MERCURY							0.007 U					0.007 U	
NICKEL							5.2 J					193 J	
POTASSIUM							3410 J					7280 J	
SELENIUM							1.8 U					0.81 U	
SODIUM							77500 J					18500 J	
TIN							0.4 U					0.1 U	
TITANIUM							0.85 U					0.83 U	
VANADIUM							0.31 U					0.17 U	
ZINC							48.2 J					244 J	
Miscellaneous Parameters (mg/L)													
AMMONIA-N													
CHLORIDE		47		14 U	8 J			15 U	14.5 U	14 U	17 U		4
NITRITE/NITRATE-N		0.025 U		0.05 U	0.27 J			0.025 U	0.025 U	0.025 U	0.19 J		0.05 UJ
SULFATE		520		210 U	980 J			260 J	290 J	320 J	180 U		8
TOTAL ORGANIC CARBON													2.6
Field Parameters													
ALKALINITY (MG/L)		200			10 U			10 U	10 U		10 U		250
CARBON DIOXIDE (MG/L)		40			280			260	260		140		10 U
DISSOLVED OXYGEN (MG/L)		1.5			0.35			0.1	0.1		6		3.5
DISSOLVED OXYGEN - METER (MG/L)	6.94	1.67	2.13	2.33	1.28	4.51		0.64	0.64		7.27		2.57
FERROUS IRON (MG/L)		0.03			3.3 >			3.3 >	3.3 >		3.3 >		0
HYDROGEN SULFIDE (H2S) (MG/L)		0			0			0	0		0		0
MANGANESE (MG/L)		3.8			22 >			9.4	9.4		4.1		0.3

APPENDIX A
POSITIVE HITS TABLE
GROUND WATER - ROUNDS 1 AND 2
SMWU 16 - B146 CAST HIGH EXPLOSIVES INCINERATOR
NSWC CRANE, INDIANA

LOCATION	16MWT06	16MWT06	16MWT08	16MWT09	16MWT10	16MWT11	16MWT11	16MWT12	16MWT12	16MWT12	16MWT13	16MWT13	16MWT15
NSAMPLE	16GWT0602	16GWT0603	16GWT0801	16GWT0901	16GWT1001	16GWT1101	16GWT1101-F	16GWT1201	16GWT1201-AVG	16GWT1201-D	16GWT1301	16GWT1301-F	16GWT1501
SAMPLE	16GWT0602	16GWT0603	16GWT0801	16GWT0901	16GWT1001	16GWT1101	16GWT1101-F	16GWT1201	16GWT1201-AVG	16FD11210301	16GWT1301	16GWT1301-F	16GWT1501
MATRIX	GW	GW	GW	GW	GW	GW	GF	GW	GW	GW	GW	GF	GW
DEPTH RANGE	---	---	---	---	---	---	---	---	---	---	---	---	---
SAMPLE DATE	5/11/2003	11/8/2003	12/6/2003	11/22/2003	11/21/2003	12/6/2003	12/7/2003	11/21/2003	11/21/2003	11/21/2003	11/22/2003	11/22/2003	12/6/2003
ROUND	01	02	02	02	02	02	02	02	02	02	02	02	02
VALIDATED	Y	Y	Y	Y	Y	Y	Y	Y	Y	Y	Y	Y	Y
COLLECTION METHOD	GRAB	GRAB	GRAB	GRAB	GRAB	GRAB	GRAB	GRAB	GRAB	GRAB	GRAB	GRAB	GRAB
NITRITE-N (MG/L)		0.016			0.002			0	0		0.008		0.007
OXIDATION REDUCTION POTENTIAL (MV)	-117.1	188.6	64.3	329.8	328.9	188		306.8	306.8		264.8		174.1
PH	6.93	6.49	7.16	4.1	3.72	7.35		4.27	4.27		4.72		7.99
SPECIFIC CONDUCTANCE (MS/CM)	0.96	1.216	0.257	0.502	1.178	0.256		0.795	0.795		0.433		0.392
SULFIDE (MG/L)		0.07			0.02			0.01	0.01		0.02		0.01
TEMPERATURE (°C)	14.2	14.55	11.9	16.56	14.77	7.29		16.04	16.04		21.88		12.78
TURBIDITY (NTU)	43.1	1.99	1000 >	4.82	5.56	650		4.11	4.11		8.67		22.5

APPENDIX A
POSITIVE HITS TABLE
GROUND WATER - ROUNDS 1 AND 2
SMWU 16 - B146 CAST HIGH EXPLOSIVES INCINERATOR
NSWC CRANE, INDIANA

LOCATION	16MWT15	16MWT16	16MWT16	16MWT17	16MWT18	16MWT18
NSAMPLE	16GWT1501-F	16GWT1601	16GWT1601-F	16GWT1701	16GWT1801	16GWT1801-F
SAMPLE	16GWT1501-F	16GWT1601	16GWT1601-F	16GWT1701	16GWT1801	16GWT1801-F
MATRIX	GF	GW	GF	GW	GW	GF
DEPTH RANGE	---	---	---	---	---	---
SAMPLE DATE	12/6/2003	11/22/2003	11/23/2003	12/5/2003	1/25/2004	1/25/2004
ROUND	02	02	02	02	02	02
VALIDATED	Y	Y	Y	Y	Y	Y
COLLECTION METHOD	GRAB	GRAB	GRAB	GRAB	GRAB	GRAB
Volatile Organics (ug/L)						
1,1,2,2-TETRACHLOROETHANE		0.3 U		0.3 U	0.3 U	
1,1,2-TRICHLOROETHANE		0.3 U		32	0.3 U	
1,1-DICHLOROETHENE		0.3 U		5.3	0.3 U	
2-HEXANONE		0.5 UJ		0.5 U	0.5 U	
4-METHYL-2-PENTANONE		0.5 U		0.5 U	0.5 U	
ACETONE		0.5 UR		0.5 J	0.5 UJ	
BENZENE		0.3 U		1.1	0.3 U	
BROMODICHLOROMETHANE		0.3 U		0.3 U	0.3 U	
CARBON DISULFIDE		0.3 J		0.3 U	0.3 UJ	
CARBON TETRACHLORIDE		0.3 U		0.3 U	0.3 U	
CHLOROFORM		0.3 U		2.8	1	
CIS-1,2-DICHLOROETHENE		0.3 J		210	0.3 U	
ETHANE					5.4	
ETHENE					0.14	
ETHYLBENZENE		0.3 U		0.3 U	0.3 U	
METHANE					5800	
METHYLENE CHLORIDE		0.3 UJ		0.3 U	0.3 UJ	
PROPIONITRILE		20 U		20 U	20 U	
TETRACHLOROETHENE		0.3 J		1.4	0.3 U	
TOLUENE		0.3 U		0.3 U	0.3 U	
TOTAL XYLENES		0.3 U		0.3 U	0.3 U	
TRANS-1,2-DICHLOROETHENE		0.3 U		4.1	0.3 U	
TRICHLOROETHENE		190		11000	0.3 U	
VINYL CHLORIDE		0.3 U		2.1	0.3 U	
Semivolatile Organics (ug/L)						
2-METHYLNAPHTHALENE						
ACENAPHTHENE						
BENZO(B)FLUORANTHENE						
CHRYSENE						
DIETHYL PHTHALATE						
FLUORANTHENE						
FLUORENE						
PHENANTHRENE						
PYRENE						
PYRIDINE						

APPENDIX A
POSITIVE HITS TABLE
GROUND WATER - ROUNDS 1 AND 2
SMWU 16 - B146 CAST HIGH EXPLOSIVES INCINERATOR
NSWC CRANE, INDIANA

LOCATION	16MWT15	16MWT16	16MWT16	16MWT17	16MWT18	16MWT18
NSAMPLE	16GWT1501-F	16GWT1601	16GWT1601-F	16GWT1701	16GWT1801	16GWT1801-F
SAMPLE	16GWT1501-F	16GWT1601	16GWT1601-F	16GWT1701	16GWT1801	16GWT1801-F
MATRIX	GF	GW	GF	GW	GW	GF
DEPTH RANGE	---	---	---	---	---	---
SAMPLE DATE	12/6/2003	11/22/2003	11/23/2003	12/5/2003	1/25/2004	1/25/2004
ROUND	02	02	02	02	02	02
VALIDATED	Y	Y	Y	Y	Y	Y
COLLECTION METHOD	GRAB	GRAB	GRAB	GRAB	GRAB	GRAB
Explosives (ug/L)						
2,4-DIAMINO-6-NITROTOLUENE		0.253 U		0.269 U	0.25 U	
2-AMINO-4,6-DINITROTOLUENE		0.253 U		0.269 U	0.26 U	
4-AMINO-2,6-DINITROTOLUENE		0.253 U		0.269 U	0.26 U	
DNX		0.253 U		0.269 U	0.25 U	
HMX		0.253 U		0.43 J	0.26 UJ	
MNX		0.253 U		0.269 U	0.25 U	
RDX		0.253 U		4.3	0.26 U	
Total Inorganics (ug/L)						
ALUMINUM		53900 J		187 J	10700 J	
ANTIMONY		1.8 U		0.05 U	2.1 J	
ARSENIC		26.1 J		1.3 U	2.2 J	
BARIUM		286 J		42.7 J	444 J	
BERYLLIUM		8.3 J		0.69 U	0.42 U	
CADMIUM		4 J		0.53 U	0.27 U	
CALCIUM		168000 J		42200 J	8240 J	
CHROMIUM		73.6 J		0.39 U	14.8 J	
COBALT		530 J		64.4 J	4.2 J	
COPPER		43.3 J		0.56 U	3.1 J	
IRON		64700 J		27000 J	3520 J	
LEAD		54.8 J		0.24 U	3 J	
LITHIUM						
MAGNESIUM		133000 J		16700 J	3970 J	
MANGANESE		17900 J		5940 J	93.7 J	
MERCURY		0.007 U		0.007 U	0.03 U	
NICKEL		714 J		125 J	9.6 J	
POTASSIUM		19300 J		5380 J	8410 J	
SELENIUM		5.2 J		0.07 U	0.44 U	
SODIUM		107000 J		61300 J	224000 J	
STRONTIUM						
TIN		2.5 J		0.10 U	0.54 U	
TITANIUM		134 J		0.74 U	59.1 J	
VANADIUM		64.8 J		0.17 U	15.6	
ZINC		791 J		122 J	10.6 J	
Dissolved Inorganics (ug/L)						
ALUMINUM	65.9 U		2460 J			126 J

APPENDIX A
POSITIVE HITS TABLE
GROUND WATER - ROUNDS 1 AND 2
SMWU 16 - B146 CAST HIGH EXPLOSIVES INCINERATOR
NSWC CRANE, INDIANA

LOCATION	16MWT15	16MWT16	16MWT16	16MWT17	16MWT18	16MWT18
NSAMPLE	16GWT1501-F	16GWT1601	16GWT1601-F	16GWT1701	16GWT1801	16GWT1801-F
SAMPLE	16GWT1501-F	16GWT1601	16GWT1601-F	16GWT1701	16GWT1801	16GWT1801-F
MATRIX	GF	GW	GF	GW	GW	GF
DEPTH RANGE	---	---	---	---	---	---
SAMPLE DATE	12/6/2003	11/22/2003	11/23/2003	12/5/2003	1/25/2004	1/25/2004
ROUND	02	02	02	02	02	02
VALIDATED	Y	Y	Y	Y	Y	Y
COLLECTION METHOD	GRAB	GRAB	GRAB	GRAB	GRAB	GRAB
ANTIMONY	1.5 U		0.63 U			1.5 J
ARSENIC	1.5 U		4.6 J			1.3 J
BARIUM	215 J		17 J			341 J
BERYLLIUM	0.23 U		3.8 J			0.1 U
CADMIUM	0.22 U		3 J			0.15 U
CALCIUM	10300 J		158000 J			7910 J
CHROMIUM	0.69 U		0.71 U			0.59 J
COBALT	1.1 U		522 J			4.8 J
COPPER	2.8 J		20 J			0.72 U
IRON	25.4 U		1140 U			104 U
LEAD	0.39 U		6.2 J			0.22 U
MAGNESIUM	3060 J		131000 J			3500 J
MANGANESE	17.7 J		16700 J			57.9 J
MERCURY	0.007 U		0.007 U			0.03 U
NICKEL	1.4 U		622 J			4.6 J
POTASSIUM	4660 J		16500 J			5880 J
SELENIUM	1.5 U		3.1 J			0.68 U
SODIUM	97300 J		105000 J			218000 J
TIN	0.69 U		0.19 U			0.27 U
TITANIUM	0.68 U		2.4 J			1.9 J
VANADIUM	0.59 U		0.1 U			0.53 J
ZINC	8.3 J		596 J			1.6 J
Miscellaneous Parameters (mg/L)						
AMMONIA-N						
CHLORIDE				120	4	
NITRITE/NITRATE-N				0.05 UJ	0.05 U	
SULFATE				150	6	
TOTAL ORGANIC CARBON						
Field Parameters						
ALKALINITY (MG/L)					500	
CARBON DIOXIDE (MG/L)					18	
DISSOLVED OXYGEN (MG/L)					4	
DISSOLVED OXYGEN - METER (MG/L)		5.24		0.63	3.07	
FERROUS IRON (MG/L)					0.12	
HYDROGEN SULFIDE (H2S) (MG/L)						
MANGANESE (MG/L)					0	

APPENDIX A
POSITIVE HITS TABLE
GROUND WATER - ROUNDS 1 AND 2
SMWU 16 - B146 CAST HIGH EXPLOSIVES INCINERATOR
NSWC CRANE, INDIANA

LOCATION	16MWT15	16MWT16	16MWT16	16MWT17	16MWT18	16MWT18
NSAMPLE	16GWT1501-F	16GWT1601	16GWT1601-F	16GWT1701	16GWT1801	16GWT1801-F
SAMPLE	16GWT1501-F	16GWT1601	16GWT1601-F	16GWT1701	16GWT1801	16GWT1801-F
MATRIX	GF	GW	GF	GW	GW	GF
DEPTH RANGE	---	---	---	---	---	---
SAMPLE DATE	12/6/2003	11/22/2003	11/23/2003	12/5/2003	1/25/2004	1/25/2004
ROUND	02	02	02	02	02	02
VALIDATED	Y	Y	Y	Y	Y	Y
COLLECTION METHOD	GRAB	GRAB	GRAB	GRAB	GRAB	GRAB
NITRITE-N (MG/L)					0.005	
OXIDATION REDUCTION POTENTIAL (MV)		306		111.5	-69	
PH		5.03		5.58	7.23	
SPECIFIC CONDUCTANCE (MS/CM)		1.86		0.649	0.65	
SULFIDE (MG/L)					0.04	
TEMPERATURE (C)		17.61		11.63	14.18	
TURBIDITY (NTU)		1000 >		5.92	1000 >	

SWMU 16
SURFACE SOIL

APPENDIX A
POSITIVE HITS TABLE
SURFACE SOIL - ROUNDS 1 AND 2
SWMU 16 - B146 CAST HIGH EXPLOSIVES INCINERATOR
NSWC CRANE, INDIANA

LOCATION	16SB01	16SB02	16SB03	16SB04	16SB05	16SB06	16SB07	16SB08	16SB09	16SB09	16SB09	16SB10	16SB11	16SB12	16SB13
NSAMPLE	16SS010002	16SS020002	16SS030002	16SS040002	16SS050002	16SS060002	16SS070002	16SS080002	16SS090002	16SS090002-AVG	16SS090002-D	16SS100002	16SS110002	16SS120002	16SS130002
SAMPLE	16SS010002	16SS020002	16SS030002	16SS040002	16SS050002	16SS060002	16SS070002	16SS080002	16SS090002	16SS090002-AVG	FD03270301	16SS100002	16SS110002	16SS120002	16SS130002
MATRIX	SS	SS	SS	SS	SS	SS	SS	SS	SS	SS	SS	SS	SS	SS	SS
DEPTH RANGE	0 - 2	0 - 2	0 - 2	0 - 2	0 - 2	0 - 2	0 - 2	0 - 2	0 - 2	0 - 2	0 - 2	0 - 2	0 - 2	0 - 2	0 - 2
SAMPLE DATE	3/27/2003	3/27/2003	3/27/2003	3/27/2003	3/27/2003	3/27/2003	3/27/2003	3/27/2003	3/27/2003	3/27/2003	3/27/2003	3/27/2003	3/27/2003	3/28/2003	3/28/2003
VALIDATED	Y	Y	Y	Y	Y	Y	Y	Y	Y	Y	Y	Y	Y	Y	Y
COLLECTION METHOD	GRAB	GRAB	GRAB	GRAB	GRAB	GRAB	GRAB	GRAB	GRAB	GRAB	GRAB	GRAB	GRAB	GRAB	GRAB
Volatile Organics (ug/kg)															
ACETONE	7 J	1.1 UJ	1.1 UJ	3 J	1.2 UJ	1.2 UJ	1.1 UJ	1.1 UJ	1.1 UJ	1.15 UJ	1.2 UJ	1.2 UJ	1.3 UJ	1.3 UJ	1.3 UJ
CIS-1,2-DICHLOROETHENE	1 U	1.1 U	1.1 U	1.2 U	1.2 U	1.2 U	2 J	1.1 U	1.1 U	1.15 U	1.2 U	1.2 U	1.3 U	1.3 U	1.3 U
DICHLORODIFLUOROMETHANE	1 U	1.1 U	1.1 U	1.2 U	1.2 U	1.2 U	1.1 U	1.1 U	1.1 U	1.15 U	1.2 U	1.2 U	1.3 U	1.3 U	1.3 U
STYRENE	1 U	1.1 U	1.1 U	1 J	1.2 U	1.2 U	1.1 U	1.1 U	1.1 U	1.15 U	1.2 U	1.2 U	1.3 U	1.3 U	1.3 U
TOLUENE	1 U	1.1 U	1.1 U	1.2 U	1.2 U	1.2 U	1.1 U	1.1 U	1.1 U	1.15 U	1.2 U	1.2 U	1.3 U	1.3 U	1.3 U
TRANS-1,2-DICHLOROETHENE	1 U	1 J	2 J	1 J	1.2 U	1.2 U	1.1 U	1.1 U	1.1 U	1.15 U	1.2 U	1.2 U	1.3 U	1.3 U	1.3 U
TRICHLOROETHENE	1 U	1.1 U	1.1 U	1.2 U	1.2 U	1.2 U	3	1.1 U	1.1 U	1.15 U	1.2 U	1.2 U	1.3 U	1.3 U	1.3 U
TRICHLOROFLUOROMETHANE	1 U	2 J	1.1 U	2 J	2 J	1.2 U	1.1 U	2 J	2 J	2 J	2 J	1.2 U	1.3 U	2 J	3 J
VINYL ACETATE	1 U	1.1 UJ	1.1 UJ	1.2 UJ	1.2 U	1.2 U	1.1 UJ	1.1 UJ	1.1 UJ	1.15 UJ	1.2 U	1.2 U	1.3 U	1.3 U	1.3 U
Semivolatile Organics (ug/kg)															
2-METHYLNAPHTHALENE	3.4 U	3.8 U	94	3.9 U	3.8 U	4 U	3.7 U	3.6 U	3.8 U	3.9 U	4 U	3.8 U	4.1 U	4.2 U	4.3 U
ACENAPHTHENE	5 J	3.8 U	1800	3.9 U	3.8 U	4 U	3.7 U	3.6 U	3.8 U	3.9 U	4 U	3.8 U	4.1 U	4.2 U	4.3 U
ACENAPHTHYLENE	13	3.8 U	680	3.9 U	3.8 U	4 U	3.7 U	3.6 U	3.8 U	3.9 U	4 U	3.8 U	4.1 U	4.2 U	4.3 U
ANTHRACENE	27	3.8 U	3500	3.9 U	3.8 U	4 U	10	3.6 U	5 J	3.5 J	4 U	3.8 U	4.1 U	4.2 U	4.3 U
BENZO(A)ANTHRACENE	100	3.8 U	9600	15	3.8 U	4 U	25	4 J	28 J	22 J	16 J	3.8 U	4.1 U	4.2 U	4.3 U
BENZO(A)PYRENE	94	3.8 U	8400	12	3.8 U	4 U	17	4 J	32	26	20	3.8 U	4.1 U	4.2 U	4.3 U
BENZO(B)FLUORANTHENE	110	3.8 U	9200	17	3.8 U	4 U	19	5 J	50 J	37 J	24 J	9	4.1 U	4.2 U	4 J
BENZO(G,H,I)PERYLENE	48	3.8 U	5100	8	6 J	4 U	7 J	4 J	28	24	20	3.8 U	4.1 U	4.2 U	4.3 U
BENZO(K)FLUORANTHENE	58	3.8 U	5000	11	3.8 U	4 U	13	4 J	22	19.5	17	3.8 U	4.1 U	4.2 U	4.3 U
BIS(2-ETHYLHEXYL)PHTHALATE	69 U	76 U	150 U	92 J	77 U	160 J	75 U	73 U	76 U	89 J	140 J	98 J	170	85 U	180 BU
CHRYSENE	130	4 J	11000	34	3.8 U	4 U	22	3.6 U	36	29	22	5 J	4.1 U	4.2 U	4.3 U
DIBENZO(A,H)ANTHRACENE	15	3.8 U	1600	3.9 U	3.8 U	4 U	3.7 U	3.6 U	8	5	4 U	3.8 U	4.1 U	4.2 U	4.3 U
DIBENZOFURAN	69 U	76 U	560 J	78 U	77 U	81 U	75 U	73 U	76 U	78.5 U	81 U	77 U	84 U	85 U	87 U
FLUORANTHENE	220	3.8 U	19000	41	3.8 U	4 U	58	5 J	64 J	49 J	34 J	6 J	4.1 U	4.2 U	4.3 U
FLUORENE	23	3.8 U	2300	4 J	3.8 U	4 U	11	3.6 U	3.8 U	3.9 U	4 U	3.8 U	4.1 U	4.2 U	4.3 U
INDENO(1,2,3-CD)PYRENE	41	3.8 U	4400	6 J	3.8 U	4 U	6 J	3.6 U	23	19.5	16	3.8 U	4.1 U	4.2 U	4.3 U
NAPHTHALENE	3.4 U	3.8 U	180	3.9 U	3.8 U	4 U	3.7 U	3.6 U	3.8 U	3.9 U	4 U	3.8 U	4.1 U	4.2 U	4.3 U
PHENANTHRENE	140	3.8 U	8700	24	3.8 U	4 U	49	3.6 U	28	22.5	17	3.8 U	4.1 U	4.2 U	4.3 U
PYRENE	200	6 J	35000	44	3.8 U	4 U	54	4 J	60	51	42	6 J	4.1 U	4.2 U	4.3 U
SAFROLE	69 U	76 U	150 U	78 U	77 U	81 U	75 U	73 U	76 U	78.5 U	81 U	77 U	84 U	85 U	15000
Herbicides (ug/kg)															
HEXACHLOROPHENE	0.62 U	0.68 U	2.6 J	0.7 U	0.69 U	0.72 U	0.67 U	0.66 U	0.68 U	0.7 U	0.72 U	0.69 U	0.75 U	1.1 U	1.1 U
PENTACHLOROPHENOL	0.46 U	0.51 U	0.49 U	0.53 U	14	0.54 U	0.5 U	0.49 U	0.51 U	0.525 U	0.54 U	0.52 U	0.56 U	0.57 U	0.58 U
Explosives (mg/kg)															
HMX	0.25 U	0.25 U	0.25 U	0.25 U	0.25 U	0.25 U	0.25 U	0.25 U	0.25 U	0.25 U	0.25 U	0.25 U	0.25 U	0.25 U	0.25 U
Dioxins/Furans (ng/kg)															
1,2,3,4,6,7,8,9-OCDD						4660	89.4 U	396 J	1600 J	1355 J	1110 J	815 U	3840	4980	3070
1,2,3,4,6,7,8,9-OCDF						1.9 U	2.6 UJ	1.8 UJ	1.4 UJ	1.75 UJ	2.1 UJ	2 UJ	1.1 U	1 U	20.1
1,2,3,4,6,7,8-HPCDD						151	4.2 J	4.2 J	14.7	12.55	10.4	7	29.2	45.2	42.4
1,2,3,4,6,7,8-HPCDF						0.5 U	0.6 U	0.5 U	0.81 U	0.8025 J	1.2 J	0.73 J	0.5 U	0.9 UJ	8
1,2,3,4,7,8,9-HPCDF						0.7 U	0.8 U	0.7 U	0.5 U	0.55 U	0.6 U	0.6 U	0.7 U	1.2 UJ	1.8 J
1,2,3,4,7,8-HXCDD						0.6 U	0.7 U	0.6 U	0.6 U	0.5 U	0.4 U	0.5 U	0.5 U	0.5 U	0.69 J
1,2,3,4,7,8-HXCDF						0.3 U	0.3 U	0.3 U	0.2 U	0.25 U	0.3 U	0.3 U	0.3 U	0.4 U	0.98 J
1,2,3,6,7,8-HXCDD						0.92 U	0.7 U	0.6 U	0.5 U	0.45 U	0.4 U	0.5 U	0.5 U	0.5 U	1.4 J
1,2,3,6,7,8-HXCDF						0.3 U	0.3 U	0.3 U	0.2 U	0.25 U	0.3 U	0.2 U	0.3 U	0.4 U	0.64 J

APPENDIX A
POSITIVE HITS TABLE
SURFACE SOIL - ROUNDS 1 AND 2
SWMU 16 - B146 CAST HIGH EXPLOSIVES INCINERATOR
NSWC CRANE, INDIANA

LOCATION	16SB01	16SB02	16SB03	16SB04	16SB05	16SB06	16SB07	16SB08	16SB09	16SB09	16SB09	16SB10	16SB11	16SB12	16SB13
NSAMPLE	16SS010002	16SS020002	16SS030002	16SS040002	16SS050002	16SS060002	16SS070002	16SS080002	16SS090002	16SS090002-AVG	16SS090002-D	16SS100002	16SS110002	16SS120002	16SS130002
SAMPLE	16SS010002	16SS020002	16SS030002	16SS040002	16SS050002	16SS060002	16SS070002	16SS080002	16SS090002	16SS090002-AVG	FD03270301	16SS100002	16SS110002	16SS120002	16SS130002
MATRIX	SS	SS	SS	SS	SS	SS	SS	SS	SS	SS	SS	SS	SS	SS	SS
DEPTH RANGE	0 - 2	0 - 2	0 - 2	0 - 2	0 - 2	0 - 2	0 - 2	0 - 2	0 - 2	0 - 2	0 - 2	0 - 2	0 - 2	0 - 2	0 - 2
SAMPLE DATE	3/27/2003	3/27/2003	3/27/2003	3/27/2003	3/27/2003	3/27/2003	3/27/2003	3/27/2003	3/27/2003	3/27/2003	3/27/2003	3/27/2003	3/27/2003	3/28/2003	3/28/2003
VALIDATED	Y	Y	Y	Y	Y	Y	Y	Y	Y	Y	Y	Y	Y	Y	Y
COLLECTION METHOD	GRAB	GRAB	GRAB	GRAB	GRAB	GRAB	GRAB	GRAB	GRAB	GRAB	GRAB	GRAB	GRAB	GRAB	GRAB
1,2,3,7,8,9-HXCDD						2.2 J	0.7 U	0.6 U	0.6 U	0.55 U	0.5 U	0.5 U	1.1 J	0.5 U	1.8 J
1,2,3,7,8,9-HXCDF						0.4 U	0.4 U	0.4 U	0.3 U	0.35 U	0.4 U	0.3 U	0.4 U	0.5 U	0.3 U
1,2,3,7,8-PECDD						0.6 U	0.7 U	0.6 U	0.6 U	0.5 U	0.4 U	0.6 U	0.5 U	0.4 U	0.4 U
2,3,4,6,7,8-HXCDF						0.3 U	0.4 U	0.3 U	0.3 U	0.3 U	0.3 U	0.3 U	0.3 U	0.4 U	0.7 J
2,3,7,8-TCDF						0.3 U	0.3 U	0.3 U	0.3 U	0.3 U	0.3 U	0.3 U	0.4 U	0.4 U	0.51 J
TOTAL HPCDD						208	4.2	9.7	32.7	26.8	20.9	15.1 J	52.2	82.4	86.1
TOTAL HPCDF						0.6 U	0.7 U	0.6 U	1.4 U	1.85	3	0.73	0.6 U	1 UJ	27.5 J
TOTAL HXCDD						18.2 J	0.7 U	0.6 U	2 U	1.9	2.8	0.5 U	2.8	2.3	13.5
TOTAL HXCDF						0.3 U	0.4 U	0.3 U	1.5	0.825	0.3 U	0.3 U	0.3 U	0.4 U	10.3 J
TOTAL PECDD						0.6 U	0.7 U	0.6 U	0.6 U	0.5 U	0.4 U	0.6 U	0.5 U	0.4 U	0.79 U
TOTAL PECDF						0.5 U	0.5 U	0.4 U	3.7 J	1.925 J	0.3 U	0.4 U	0.3 U	0.3 U	7.6 J
TOTAL TCDF						0.3 U	0.3 U	0.86	7.9 U	1.2 J	1.2 J	0.51 U	0.4 U	0.4 U	7 U
Inorganics (mg/kg)															
ALUMINUM	10500 J	13600 J	3610 U	18800 J	2740 J	16000 J	7590 J	4230 J	5010 J	6120 J	7230 J	7410 J	23800 J	12000 J	11000 J
ANTIMONY	0.43 U	0.40 U	0.36 U	0.62 U	0.95 U	0.75 U	0.29 U	2.9 U	8.9 J	11.25 J	13.6 J	7.3 J	3.4 U	3.6 J	13.0 J
ARSENIC	6.0 J	4.0 J	1.3 J	9.0 J	1.2 J	4.0 J	1.3 J	0.94 J	1.6 J	2.45 J	3.3 J	1.4 J	10.9 J	6.7 J	7.0 J
BARIUM	48.1 J	52.0 J	19.7 J	69.8 J	18.0 J	84.5 J	25.3 J	53.1 J	95.0 J	144.5 J	194 J	203 J	76.2 J	134 J	303 J
BERYLLIUM	0.36 J	0.43 J	0.12 U	0.59 J	0.25 U	0.47 J	0.54 J	0.49 J	0.49 J	0.495 J	0.50 J	0.80 J	0.73 J	0.64 U	0.49 U
CADMIUM	0.35 U	0.57 U	0.48 U	0.57 U	0.20 U	0.29 U	0.19 U	0.66 U	1.9 J	1.9 J	1.9 J	1.0 J	0.38 U	1.3 J	2.4 J
CALCIUM	56500 J	40000 J	246000 J	7760 J	20800 J	8910 J	4040 J	10400 J	17300 J	26100 J	34900 J	548 J	818 J	985 J	1580 J
CHROMIUM	15.5 J	18.8 J	11.9 J	20.5 J	8.3 J	20.5 J	19.3 J	12.1 J	12.1 J	13.05 J	14.0 J	17.7 J	28.9 J	12.9 J	11.8 J
COBALT	3.2 J	3.6 J	1.1 J	5.9 J	0.87 J	5.7 J	3.8 J	4.4 J	3.6 J	4.55 J	5.5 J	7.4 J	5.6 J	11.5 J	13.7 J
COPPER	10.4 J	9.9 J	3.5 J	12.7 J	13.9 J	12.1 J	13.8 J	52.5 J	84.0 J	137 J	190 J	127 J	16.9 J	62.6 J	122 J
IRON	15800 J	18600 J	4230 J	22200 J	8590 J	20900 J	7890 J	14400 J	13600 J	14800 J	16000 J	23600 J	28900 J	18900 J	17200 J
LEAD	8.8 J	12.3 J	4.7 J	11.4 J	15.9 J	15.0 J	16.0 J	195 J	311 J	395.5 J	480 J	345 J	15.2 J	258 J	405 J
LITHIUM	7.7 J	10.7 J	9.9 J	14.1 J	3.0 J	13.5 J	17.1 J	7.2 J	6.1 J	7.05 J	8.0 J	9.8 J	19.2 J	9.7 J	8.7 J
MAGNESIUM	2860 J	6350 J	62500 J	4650 J	8230 J	2980 J	1970 J	830 J	2490 J	4490 J	6490 J	957 J	1560 J	1520 J	1400 J
MANGANESE	97.0 J	140 J	78.2 J	147 J	28.2 J	75.0 J	31.0 J	108 J	132 J	251.5 J	371 J	311 J	231 J	706 J	1040 J
MERCURY	0.027 J	0.008 U	0.007 U	0.026 J	0.22 J	0.029 J	0.002 U	0.018 J	0.016 J	0.02 J	0.024 J	0.040 J	0.16 J	0.073 J	0.070 J
NICKEL	7.9 J	9.3 J	9.9 J	13.3 J	4.2 J	11.5 J	16.7 J	13.0 J	9.4 J	10.35 J	11.3 J	19.9 J	15.1 J	12.4 J	13.4 J
POTASSIUM	982 J	1180 J	1160 J	1690 J	807 J	1120 J	1510 J	1140 J	919 J	957.5 J	996 J	1240 J	2240 J	707 J	595 J
SELENIUM	0.23 U	0.22 U	0.22 U	0.41 U	0.14 U	0.17 U	0.20 U	0.04 U	0.12 U	0.165 U	0.21 U	0.12 U	0.26 U	0.43 U	0.54 U
SILVER	0.13 U	0.04 U	0.04 U	0.05 U	0.03 U	0.03 U	0.04 U	0.03 U	0.04 U	0.055 U	0.07 U	0.09 U	0.08 U	0.04 U	0.26 U
SODIUM	162 J	178 J	496 J	84.9 U	66.0 U	49.6 U	69.5 U	45.7 U	36.2 U	45.75 U	55.3 U	48.5 U	53.2 U	20.4 U	24.5 U
STRONTIUM	93.8 J	51.2 J	252 J	20.8 J	26.5 J	50.2 J	16.6 J	33.6 J	41.5 J	61.15 J	80.8 J	55.0 J	14.1 J	58.8 J	145 J
THALLIUM	0.18 U	0.15 U	0.06 U	0.23 U	0.05 U	0.17 U	0.12 U	0.06 U	0.08 U	0.09 U	0.10 U	0.10 U	0.32 J	0.15 U	0.26 U
TIN	0.43 U	0.47 U	0.38 U	0.57 U	0.33 U	0.63 U	0.42 U	12.3 J	2.4 U	2.3 U	2.2 U	1.1 U	0.83 U	0.98 U	2.3 U
TITANIUM	128 J	121 J	39.1 J	239 J	61.8 J	125 J	68.2 J	82.7 J	53.6 J	67.4 J	81.2 J	22.9 J	348 J	113 J	71.7 J
VANADIUM	27.1 J	29.3 J	13.9 J	37.1 J	10.8 J	32.3 J	12.3 J	11.1 J	10.6 J	13.6 J	16.6 J	14.1 J	52.8 J	23.3 J	22.8 J
ZINC	24.2 J	24.0 J	33.6 J	40.7 J	24.2 J	33.6 J	48.1 J	271 J	552 J	936 J	1320 J	972 J	55.9 J	603 J	1560 J
Miscellaneous Parameters															
CATION EXCHANGE CAPACITY (MEQ/100)		20					7.4							17	
PH		8					7.7							5.7	
TOTAL ORGANIC CARBON (MG/KG)		3800 J					1000 U							6200 J	

APPENDIX A
POSITIVE HITS TABLE
SURFACE SOIL - ROUNDS 1 AND 2
SWMU 16 - B146 CAST HIGH EXPLOSIVES INCINERATOR
NSWC CRANE, INDIANA

LOCATION	16SB14	16SB15	16SB16	16SB17	16SB17	16SB17	16SB18	16SB19	16SB20	16SB21	16SB22	16SB23	16SB23	16SB23	16SB24
NSAMPLE	16SS140002	16SS150002	16SS160002	16SS170002	16SS170002-AVG	16SS170002-D	16SS180002	16SS190002	16SS200002	16SS210002	16SS220002	16SS230002	16SS230002-AVG	16SS230002-D	16SS240002
SAMPLE	16SS140002	16SS150002	16SS160002	16SS170002	16SS170002-AVG	FD03270302	16SS180002	16SS190002	16SS200002	16SS210002	16SS220002	16SS230002	16SS230002-AVG	FD03280301	16SS240002
MATRIX	SS	SS	SS	SS	SS	SS	SS	SS	SS	SS	SS	SS	SS	SS	SS
DEPTH RANGE	0 - 2	0 - 2	0 - 2	0 - 2	0 - 2	0 - 2	0 - 2	0 - 2	0 - 2	0 - 2	0 - 2	0 - 2	0 - 2	0 - 2	0 - 2
SAMPLE DATE	3/27/2003	3/27/2003	3/27/2003	3/27/2003	3/27/2003	3/27/2003	3/28/2003	3/28/2003	3/28/2003	3/28/2003	3/28/2003	3/28/2003	3/28/2003	3/28/2003	3/28/2003
VALIDATED	Y	Y	Y	Y	Y	Y	Y	Y	Y	Y	Y	Y	Y	Y	Y
COLLECTION METHOD	GRAB	GRAB	GRAB	GRAB	GRAB	GRAB	GRAB	GRAB	GRAB	GRAB	GRAB	GRAB	GRAB	GRAB	GRAB
Volatile Organics (ug/kg)															
ACETONE	1.2 UJ	1.1 UJ	1.2 UJ	1.2 UJ	1.15 UJ	1.1 UJ	1.2 UJ	8 J	1.1 UJ	1.1 UJ	3 J	30 J	15.325 J	1.3 UJ	1.3 UJ
CIS-1,2-DICHLOROETHENE	1.2 U	1.1 U	1.2 U	1.2 U	1.15 U	1.1 U	1.2 U	1.2 U	1.1 U	1.1 U	1.2 U	1.3 U	1.3 U	1.3 U	1.3 U
DICHLORODIFLUOROMETHANE	1.2 U	1.1 U	1.2 U	1.2 U	1.15 U	1.1 U	1.2 U	1.2 UJ	1.1 U	1.1 U	1.2 UJ	1.3 UJ	1.3 UJ	1.3 UJ	1.3 U
STYRENE	1.2 U	1.1 UJ	1.2 U	1.2 U	1.15 U	1.1 U	1.2 U	1.2 U	1.1 U	1.1 UJ	1.2 U	1.3 U	1.3 U	1.3 U	1.3 U
TOLUENE	1.2 U	1.1 U	1 J	1.2 U	1.15 U	1.1 U	1.2 U	1.2 U	1.1 U	1.1 U	1.2 U	1.3 U	1.3 U	1.3 U	1.3 U
TRANS-1,2-DICHLOROETHENE	1.2 U	1.1 U	1.2 U	1.2 U	1.15 U	1.1 U	1.2 U	1.2 U	1.1 U	1.1 U	1.2 U	1.3 U	1.3 U	1.3 U	1.3 U
TRICHLOROETHENE	1.2 U	1.1 U	1.2 U	1.2 U	1.15 U	1.1 U	1.2 U	1.2 U	2 J	1.1 U	1.2 U	1.3 U	1.3 U	1.3 U	1.3 U
TRICHLOROFLUOROMETHANE	2 J	1.1 U	2 J	2 J	2 J	2 J	2 J	2 J	2 J	2 J	2 J	3 J	2.5 J	2 J	3 J
VINYL ACETATE	1.2 UJ	1.1 UJ	1.2 UJ	1.2 UJ	1.15 UJ	1.1 U	1.2 U	1 J	1.1 U	1.1 U	1.2 U	1.3 U	1.3 U	1.3 U	1.3 U
Semivolatile Organics (ug/kg)															
2-METHYLNAPHTHALENE	4 U	3.8 U	4 U	3.8 U	3.8 U	3.8 U	3.9 U	3.8 U	4 J	3.8 U	3.9 U	4.2 U	4.2 U	4.2 U	4.2 U
ACENAPHTHENE	4 U	3.8 U	4 U	3.8 U	3.8 U	3.8 U	3.9 U	3.8 U	3.6 U	3.8 U	3.9 U	4.2 U	4.2 U	4.2 U	4.2 U
ACENAPHTHYLENE	4 U	3.8 U	4 U	3.8 U	3.8 U	3.8 U	3.9 U	3.8 U	3.6 U	3.8 U	3.9 U	4.2 U	4.2 U	4.2 U	4.2 U
ANTHRACENE	4 U	3.8 U	4 U	3.8 U	3.8 U	3.8 U	3.9 U	3.8 U	3.6 U	3.8 U	3.9 U	4.2 U	4.2 U	4.2 U	4.2 U
BENZO(A)ANTHRACENE	4 U	5 J	6 J	3.8 U	4.95	8	3.9 U	3.8 U	3.6 U	3.8 U	3.9 U	4.2 U	4.2 U	4.2 U	4.2 U
BENZO(A)PYRENE	4 U	4 J	10	3.8 U	4.45 J	7 J	3.9 U	3.8 U	3.6 U	3.8 U	3.9 U	4.2 U	4.2 U	4.2 U	4.2 U
BENZO(B)FLUORANTHENE	4 U	11	12	3.8 U	4.95	8	3.9 U	3.8 U	3.6 U	3.8 U	3.9 U	4.2 U	4.2 U	4.2 U	4.2 U
BENZO(G,H,I)PERYLENE	6 J	6 J	10	3.8 U	4.45 J	7 J	3.9 U	3.8 U	3.6 U	3.8 U	3.9 U	4.2 U	4.2 U	4.2 U	4.2 U
BENZO(K)FLUORANTHENE	4 U	3.8 U	8 J	3.8 U	3.95 J	6 J	3.9 U	3.8 U	3.6 U	3.8 U	3.9 U	4.2 U	4.2 U	4.2 U	4.2 U
BIS(2-ETHYLHEXYL)PHTHALATE	96 J	97 J	110 J	130 J	84.25 J	77 U	78 UJ	730 BU	130 BU	110 BU	180 BU	270 BU	140 BU	140 BU	89 BU
CHRYSENE	4 U	6 J	10	3.8 U	4.95	8	3.9 U	3.8 U	3.6 U	3.8 U	3.9 U	4.2 U	4.2 U	4.2 U	4.2 U
DIBENZO(A,H)ANTHRACENE	4 U	3.8 U	4 U	3.8 U	3.8 U	3.8 U	3.9 U	3.8 U	3.6 U	3.8 U	3.9 U	4.2 U	4.2 U	4.2 U	4.2 U
DIBENZOFURAN	80 U	77 U	81 U	78 U	77.5 U	77 U	78 UJ	77 U	74 U	77 U	78 U	85 U	85 U	85 U	84 U
FLUORANTHENE	6 J	8	15	3.8 U	3.95 J	6 J	3.9 U	3.8 U	3.6 U	3.8 U	3.9 U	4.2 U	4.2 U	4.2 U	4.2 U
FLUORENE	4 U	3.8 U	4 U	3.8 U	3.8 U	3.8 U	3.9 U	3.8 U	3.6 U	3.8 U	3.9 U	4.2 U	4.2 U	4.2 U	4.2 U
INDENO(1,2,3-CD)PYRENE	5 J	5 J	8	3.8 U	3.95 J	6 J	3.9 U	3.8 U	3.6 U	3.8 U	3.9 U	4.2 U	4.2 U	4.2 U	4.2 U
NAPHTHALENE	4 U	3.8 U	4 U	3.8 U	3.8 U	3.8 U	3.9 U	3.8 U	5 J	3.8 U	3.9 U	4.2 U	4.2 U	4.2 U	4.2 U
PHENANTHRENE	4 U	4 J	7 J	3.8 U	3.8 U	3.8 U	3.9 U	3.8 U	3.6 U	3.8 U	3.9 U	4.2 U	4.2 U	4.2 U	4.2 U
PYRENE	7 J	8	15	3.8 U	5.45	9	3.9 U	3.8 U	3.6 U	3.8 U	3.9 U	4.2 U	4.2 U	4.2 U	4.2 U
SAFROLE	80 U	77 U	81 U	78 U	77.5 U	77 U	78 UJ	77 U	74 U	77 U	78 U	1200 J	825 J	450 J	84 U
Herbicides (ug/kg)															
HEXACHLOROPHENE	0.72 U	0.69 U	0.72 U	0.7 U	0.695 U	0.69 U	0.99 U	0.98 U	0.94 U	0.97 U	1 U	1.1 U	1.1 U	1.1 U	1.1 U
PENTACHLOROPHENOL	0.54 U	0.51 U	0.54 U	0.52 U	0.515 U	0.51 U	0.53 U	0.52 U	0.5 U	0.52 U	0.53 U	0.57 U	0.57 U	0.57 U	0.57 U
Explosives (mg/kg)															
HMX	0.25 U	0.25 U	0.25 U	0.25 U	0.25 U	0.25 U	0.25 U	0.25 U	0.25 U	0.25 U	0.25 U	0.25 U	0.25 U	0.25 U	0.25 U
Dioxins/Furans (ng/kg)															
1,2,3,4,6,7,8,9-OCDD	735	282 J	731 J	935	897	859	2350	2510	49.4	1370	1290	1490 J	1950 J	2410	2070 J
1,2,3,4,6,7,8,9-OCDF	1.8 J	1.8 UJ	2.1 UJ	1.4 U	1.2 U	1 U	0.62 J	0.5 U	0.79 J	0.5 U	0.2 U	0.8 UJ	1.1 UJ	1.4 U	1.3 J
1,2,3,4,6,7,8-HPCDD	9.3	4.1 J	7.4	10.4	8.7	7	13.1	13.5	1.5 U	9.7	8.8	20.3	21.15	22	16.9 J
1,2,3,4,6,7,8-HPCDF	0.81 J	0.4 U	0.5 U	0.5 U	0.6 U	0.7 U	0.33 J	0.1 U	0.27 U	0.2 U	0.07 U	0.76 U	0.43 U	0.1 U	0.56 J
1,2,3,4,7,8,9-HPCDF	0.6 U	0.6 U	0.7 U	0.8 U	0.7 U	0.6 U	0.08 U	0.2 U	0.08 U	0.2 U	0.09 U	0.3 U	0.25 U	0.2 U	0.2 UJ
1,2,3,4,7,8-HXCDD	0.4 U	0.5 U	0.6 U	0.5 U	0.45 U	0.4 U	0.2 J	0.2 U	0.1 U	0.2 U	0.1 U	0.4 U	0.3 U	0.2 U	0.37 J
1,2,3,4,7,8-HXCDF	0.2 U	0.3 U	0.72 J	0.3 U	0.25 U	0.2 U	0.13 U	0.38 J	0.12 U	0.31 U	0.05 U	0.43 J	0.265 J	0.2 U	0.35 J
1,2,3,6,7,8-HXCDD	0.4 U	0.5 U	0.6 U	0.5 U	0.4 U	0.3 U	0.27 J	0.42 J	0.09 U	0.2 U	0.09 U	0.64 J	0.535 J	0.43 J	0.48 U
1,2,3,6,7,8-HXCDF	0.2 U	0.3 U	0.3 U	0.3 U	0.25 U	0.2 U	0.06 U	0.09 U	0.04 U	0.09 U	0.04 U	0.2 U	0.15 U	0.1 U	0.1 UJ

APPENDIX A
POSITIVE HITS TABLE
SURFACE SOIL - ROUNDS 1 AND 2
SWMU 16 - B146 CAST HIGH EXPLOSIVES INCINERATOR
NSWC CRANE, INDIANA

LOCATION	16SB14	16SB15	16SB16	16SB17	16SB17	16SB17	16SB18	16SB19	16SB20	16SB21	16SB22	16SB23	16SB23	16SB23	16SB24
NSAMPLE	16SS140002	16SS150002	16SS160002	16SS170002	16SS170002-AVG	16SS170002-D	16SS180002	16SS190002	16SS200002	16SS210002	16SS220002	16SS230002	16SS230002-AVG	16SS230002-D	16SS240002
SAMPLE	16SS140002	16SS150002	16SS160002	16SS170002	16SS170002-AVG	FD03270302	16SS180002	16SS190002	16SS200002	16SS210002	16SS220002	16SS230002	16SS230002-AVG	FD03280301	16SS240002
MATRIX	SS	SS	SS	SS	SS	SS	SS	SS	SS	SS	SS	SS	SS	SS	SS
DEPTH RANGE	0 - 2	0 - 2	0 - 2	0 - 2	0 - 2	0 - 2	0 - 2	0 - 2	0 - 2	0 - 2	0 - 2	0 - 2	0 - 2	0 - 2	0 - 2
SAMPLE DATE	3/27/2003	3/27/2003	3/27/2003	3/27/2003	3/27/2003	3/27/2003	3/28/2003	3/28/2003	3/28/2003	3/28/2003	3/28/2003	3/28/2003	3/28/2003	3/28/2003	3/28/2003
VALIDATED	Y	Y	Y	Y	Y	Y	Y	Y	Y	Y	Y	Y	Y	Y	Y
COLLECTION METHOD	GRAB	GRAB	GRAB	GRAB	GRAB	GRAB	GRAB	GRAB	GRAB	GRAB	GRAB	GRAB	GRAB	GRAB	GRAB
1,2,3,7,8,9-HXCDD	0.86 J	0.5 U	0.6 U	0.5 U	0.45 U	0.4 U	0.47 J	0.9 U	0.1 U	0.2 U	0.1 U	0.81 J	0.855 J	0.9 J	0.71 J
1,2,3,7,8,9-HXCDF	0.3 U	0.4 U	0.81 J	0.4 U	0.35 U	0.3 U	0.06 U	0.1 U	0.06 U	0.1 U	0.06 U	0.2 U	0.15 U	0.1 U	0.2 UJ
1,2,3,7,8-PECDD	0.3 U	0.6 U	0.8 U	0.5 U	0.4 U	0.3 U	0.14 J	0.3 U	0.1 U	0.2 U	0.1 U	0.4 UJ	0.35 UJ	0.3 U	0.3 UJ
2,3,4,6,7,8-HXCDF	0.2 U	0.3 U	0.3 U	0.3 U	0.25 U	0.2 U	0.12 J	0.1 U	0.05 U	0.1 U	0.05 U	0.2 U	0.15 U	0.1 U	0.21 U
2,3,7,8-TCDF	0.2 U	0.3 U	0.3 U	0.4 U	0.3 U	0.2 U	0.06 U	0.1 U	0.05 U	0.1 U	0.05 U	0.2 U	0.15 U	0.1 U	0.1 UJ
TOTAL HPCDD	16.4	9 J	15.9 J	22.2	17.8	13.4	25.6	26.3	3.3 U	20.1	20.2	42.8	43.4	44	34.2 J
TOTAL HPCDF	1.4 J	0.5 U	0.6 U	1.3	0.825	0.7 U	0.48 J	0.1 U	0.53 U	0.2 U	0.08 U	0.76 U	0.43 U	0.1 U	0.56 J
TOTAL HXCDD	3.4	0.5 U	0.6 U	2	1.65	1.3	3.5 J	2.8 J	0.94 U	1.6	2 J	6.2 J	5.1 J	4 J	3.7 J
TOTAL HXCDF	0.46	0.3 U	1.5	0.4 U	0.3 U	0.2 U	0.42 J	0.67	0.51 U	0.5 J	0.05 U	1 J	0.55 J	0.2 U	0.83 J
TOTAL PECDD	0.3 U	0.6 U	0.8 U	0.5 U	0.4 U	0.3 U	0.34	0.3 U	0.1 U	0.2 U	0.1 U	0.4 UJ	0.35 UJ	0.3 U	0.3 UJ
TOTAL PECDF	0.87 U	0.4 U	0.5 U	0.3 U	0.25 U	0.2 U	0.07 U	0.36 U	0.07 U	0.2 U	0.07 U	0.2 UJ	0.15 UJ	0.1 U	0.2 UJ
TOTAL TCDF	2.7 U	0.3 U	0.3 U	0.4 U	0.3 U	0.2 U	0.06 U	0.1 U	0.26	0.1 U	0.05 U	2.4 J	1.225 J	0.1 U	0.1 UJ
Inorganics (mg/kg)															
ALUMINUM	13900 J	12900 J	11900 J	9880 J	9565 J	9250 J	4690 J	8340 J	3170 J	2510 J	9330 J	17300 J	12890 J	8480 J	8940 J
ANTIMONY	27.2 J	4.4 J	6.6 J	1.4 U	2.5 U	3.6 U	0.59 U	0.29 U	7.7 J	14.8 J	2.0 U	1.3 U	4.875 J	9.1 J	2.0 J
ARSENIC	4.7 J	5.9 J	4.7 J	2.7 J	2.4 J	2.1 J	1.5 J	3.4 J	1.2 J	1.1 J	3.3 J	10.5 J	7.7 J	4.9 J	5.6 J
BARIUM	144 J	177 J	148 J	119 J	82.1 J	45.2 J	48.2 J	36.2 J	159 J	243 J	61.3 J	85.2 J	123.6 J	162 J	91.7 J
BERYLLIUM	0.45 J	0.68 J	0.63 J	1.4 J	1.175 J	0.95 J	0.59 U	0.22 U	0.86 J	0.23 U	0.79 J	0.60 J	0.42 J	0.48 U	0.51 U
CADMIUM	0.60 U	2.8 J	0.94 J	0.75 J	0.455 J	0.32 U	0.16 U	0.21 U	0.66 J	0.56 U	0.57 U	0.43 U	0.4275 J	0.64 J	0.30 U
CALCIUM	63000 J	6860 J	2570 J	219 J	343.5 J	468 J	316 J	152 U	3290 J	3890 J	478 J	236 U	393 J	668 J	888 J
CHROMIUM	16.0 J	19.2 J	16.7 J	26.0 J	23.65 J	21.3 J	13.6 J	10.9 J	13.8 J	6.7 J	17.0 J	18.5 J	13.75 J	9.0 J	10.0 J
COBALT	4.5 J	9.4 J	9.0 J	25.9 J	18.1 J	10.3 J	8.7 J	2.9 J	15.6 J	8.3 J	6.6 J	7.8 J	10.35 J	12.9 J	6.6 J
COPPER	231 J	413 J	66.9 J	39.5 J	30.95 J	22.4 J	12.8 J	6.9 J	65.4 J	391 J	28.3 J	23.0 J	32.6 J	42.2 J	15.3 J
IRON	15700 J	22500 J	17900 J	31000 J	26750 J	22500 J	19800 J	14200 J	43000 J	15800 J	42000 J	28500 J	20700 J	12900 J	13900 J
LEAD	1240 J	211 J	154 J	140 J	83.9 J	27.8 J	9.8 J	8.1 J	765 J	211 J	69.9 J	43.0 J	69.4 J	95.8 J	18.0 J
LITHIUM	10.7 J	12.1 J	10.1 J	21.5 J	20.15 J	18.8 J	8.0 J	5.6 J	5.7 J	3.4 J	8.3 J	12.8 J	10.55 J	8.3 J	8.0 J
MAGNESIUM	2940 J	1890 J	1420 J	2330 J	1659.5 J	989 J	854 J	1030 J	989 J	851 J	1190 J	2320 J	1765 J	1210 J	1250 J
MANGANESE	301 J	575 J	566 J	536 J	387 J	238 J	155 J	130 J	945 J	244 J	208 J	275 J	542 J	809 J	205 J
MERCURY	0.042 J	0.015 J	0.009 U	0.026 J	0.028 J	0.030 J	0.002 U	0.011 U	0.015 U	0.026 J	0.006 U	0.047 J	0.04 J	0.033 J	0.047 J
NICKEL	9.9 J	15.0 J	12.1 J	41.3 J	29.7 J	18.1 J	15.9 J	5.6 J	23.6 J	15.7 J	13.5 J	15.0 J	12.6 J	10.2 J	8.4 J
POTASSIUM	791 J	1340 J	1280 J	1440 J	1620 J	1800 J	484 J	360 J	750 J	696 J	514 J	893 J	743 J	593 J	535 J
SELENIUM	0.22 U	0.31 U	0.24 U	0.25 U	0.22 U	0.19 U	0.11 U	0.09 U	0.16 U	0.05 U	0.17 U	0.49 U	0.43 U	0.37 U	0.28 U
SILVER	0.18 U	0.10 U	0.05 U	0.05 U	0.035 U	0.02 U	0.02 U	0.02 U	0.04 U	0.06 U	0.02 U	0.03 U	0.04 U	0.05 U	0.03 U
SODIUM	68.8 U	40.3 U	38.5 U	40.7 U	40.7 U	40.7 U	19.3 U	18.1 U	36.0 U	64.2 U	27.1 U	19.7 U	18.5 U	17.3 U	14.5 U
STRONTIUM	81.8 J	46.5 J	47.0 J	34.8 J	28.8 J	22.8 J	6.8 J	7.1 J	22.4 J	140 J	30.4 J	14.8 J	50.65 J	86.5 J	48.8 J
THALLIUM	0.17 U	0.20 U	0.18 U	0.17 U	0.15 U	0.13 U	0.10 U	0.07 U	0.22 U	0.08 U	0.09 U	0.21 U	0.2 U	0.19 U	0.12 U
TIN	1.9 U	2.1 U	2.2 U	0.58 U	0.94 U	1.3 U	0.53 U	0.46 U	0.65 U	2.2 U	0.68 U	0.64 U	0.775 U	0.91 U	0.47 U
TITANIUM	99.9 J	123 J	119 J	67.0 J	61.25 J	55.5 J	26.7 J	73.3 J	16.1 J	7.5 J	33.7 J	179 J	111.95 J	44.9 J	82.4 J
VANADIUM	25.7 J	30.3 J	26.0 J	21.6 J	17.6 J	13.6 J	10.0 J	16.1 J	8.2 J	5.8 J	23.8 J	32.1 J	24.95 J	17.8 J	17.5 J
ZINC	575 J	1150 J	563 J	438 J	252 J	132 U	47.8 J	17.6 U	132 U	2510 U	197 U	102 J	444 J	786 J	174 J
Miscellaneous Parameters															
CATION EXCHANGE CAPACITY (MEQ/100)							13								
PH							5.3								22
TOTAL ORGANIC CARBON (MG/KG)							3800 J								6.5
															5800 J

APPENDIX A
POSITIVE HITS TABLE
SURFACE SOIL - ROUNDS 1 AND 2
SWMU 16 - B146 CAST HIGH EXPLOSIVES INCINERATOR
NSWC CRANE, INDIANA

LOCATION	16SB25	16SB26	16SB26	16SB26	16SB27	16SB28	16SB29	16SB30	16SB31	16SB32	16SB32	16SB33	16SB34	16SB35	16SB36
NSAMPLE	16SS250002	16SS260002	16SS260002-AVG	16SS260002-D	16SS270002	16SS280002	16SS290002	16SS300002	16SS310002	16SS320002	16SS320002-AVG	16SS330002	16SS340002	16SS350002	16SS360002
SAMPLE	16SS250002	16SS260002	16SS260002-AVG	FD04090302	16SS270002	16SS280002	16SS290002	16SS300002	16SS310002	16SS320002	16SS320002-AVG	16SS330002	16SS340002	16SS350002	16SS360002
MATRIX	SS	SS	SS	SS	SS	SS	SS	SS	SS	SS	SS	SS	SS	SS	SS
DEPTH RANGE	0 - 2	0 - 2	0 - 2	0 - 2	0 - 2	0 - 2	0 - 2	0 - 2	0 - 2	0 - 2	0 - 2	0 - 2	0 - 2	0 - 2	0 - 2
SAMPLE DATE	3/28/2003	4/9/2003	4/9/2003	4/9/2003	3/28/2003	3/28/2003	3/28/2003	3/28/2003	3/28/2003	4/9/2003	4/9/2003	4/9/2003	4/9/2003	3/28/2003	4/9/2003
VALIDATED	Y	Y	Y	Y	Y	Y	Y	Y	Y	Y	Y	Y	Y	Y	Y
COLLECTION METHOD	GRAB	GRAB	GRAB	GRAB	GRAB	GRAB	GRAB	GRAB	GRAB	GRAB	GRAB	GRAB	GRAB	GRAB	GRAB
Volatile Organics (ug/kg)															
ACETONE	34 J	8 BU	6 BU	6 BU	1.1 UJ	1.2 UJ	71 J	32 J	1.2 UJ	1.2 UJ	1.2 UJ	1.1 UJ	1.1 UJ	1.1 UJ	1.2 UJ
CIS-1,2-DICHLOROETHENE	1.2 U	1.1 U	1.1 U	1.1 U	1.1 U	1.2 U	1.3 U	1.3 U	1.2 U	1.2 U	1.2 U	1.1 U	1.1 U	1.1 U	1.2 U
DICHLORODIFLUOROMETHANE	1.2 UJ	1.1 UJ	1.1 UJ	1.1 UJ	1.1 U	1.2 U	1.3 UJ	1.3 U	1.2 U	1.2 UJ	1.2 UJ	10 J	1.1 UJ	1.1 U	1.2 UJ
STYRENE	1.2 U	1.1 UJ	1.1 UJ	1.1 U	1.1 U	1.2 U	1.3 U	1.3 U	1.2 U	1.2 U	1.2 U	1.1 U	1.1 U	1.1 U	1.2 U
TOLUENE	1.2 U	1.1 U	1.1 U	1.1 U	1.1 U	1.2 U	1.3 U	1.3 U	1.2 U	1.2 U	1.2 U	1.1 U	1.1 U	1.1 U	1.2 U
TRANS-1,2-DICHLOROETHENE	1.2 U	1.1 U	1.1 U	1.1 U	1.1 U	1.2 U	1.3 U	1.3 U	1.2 U	1.2 U	1.2 U	1.1 U	1.1 U	1.1 U	1.2 U
TRICHLOROETHENE	1.2 U	1.1 U	1.1 U	1.1 U	1.1 U	1.2 U	1.3 U	1.3 U	1.2 U	1.2 U	1.2 U	1.1 U	1.1 U	1.1 U	1.2 U
TRICHLOROFLUOROMETHANE	2 J	1.1 U	1.275 J	2 J	2 J	2 J	3 J	2 J	2 J	2 J	2 J	3 J	2 J	3 J	2 J
VINYL ACETATE	1.2 U	1.1 U	1.1 U	1.1 U	1.1 U	1.2 U	1.3 U	1.3 U	1.2 U	1.2 U	1.2 U	1.1 U	1.1 U	1 J	1.2 U
Semivolatile Organics (ug/kg)															
2-METHYLNAPHTHALENE	4 U	3.7 U	3.7 U	3.7 U	3.7 U	3.9 U	4.2 U	4.2 U	4 U	4.1 U	4.1 U	3.8 U	3.5 U	3.8 U	3.8 U
ACENAPHTHENE	4 U	3.7 U	3.7 U	3.7 U	3.7 U	3.9 U	4.2 U	4.2 U	4 U	4.1 U	4.1 U	3.8 U	3.5 U	3.8 U	3.8 U
ACENAPHTHYLENE	4 U	3.7 U	3.7 U	3.7 U	3.7 U	3.9 U	4.2 U	4.2 U	4 U	4.1 U	4.1 U	4 J	3.5 U	3.8 U	3.8 U
ANTHRACENE	4 U	3.7 U	3.7 U	3.7 U	3.7 U	3.9 U	4.2 U	4.2 U	4 U	4.1 U	4.1 U	3.8 U	3.5 U	3.8 U	3.8 U
BENZO(A)ANTHRACENE	4 U	10 J	5.925 J	3.7 UJ	3.7 U	3.9 U	4.2 U	4.2 U	4 U	4.1 U	4.1 U	36	3.5 U	8	3.8 U
BENZO(A)PYRENE	4 U	9 J	5.425 J	3.7 UJ	3.7 U	3.9 U	4.2 U	4.2 U	4 U	4.1 U	4.1 U	45	3.5 U	10	3.8 U
BENZO(B)FLUORANTHENE	4 U	13 J	7.425 J	3.7 UJ	3.7 U	5 J	4.2 U	4.2 U	4 U	4.1 UJ	4.1 UJ	62 J	3.5 UJ	12	3.8 UJ
BENZO(G,H,I)PERYLENE	4 U	3.7 U	3.7 U	3.7 U	3.7 U	3.9 U	4.2 U	4.2 U	4 U	4.1 U	4.1 U	23	3.5 U	5 J	3.8 U
BENZO(K)FLUORANTHENE	4 U	8 J	4.925 J	3.7 UJ	3.7 U	3.9 U	4.2 U	4.2 U	4 U	4.1 U	4.1 U	46	3.5 U	8	3.8 U
BIS(2-ETHYLHEXYL)PHTHALATE	150 BU	87 BU	80.5 BU	74 U	110 BU	140 BU	410 BU	240 BU	140 BU	83 U	83 U	76 U	72 U	220 BU	1200 BJ
CHRYSENE	4 U	7 J	4.425 J	3.7 U	3.7 U	6 J	4.2 U	4.2 U	4 U	4.1 U	4.1 U	42	3.5 U	9	3.8 U
DIBENZO(A,H)ANTHRACENE	4 U	3.7 U	3.7 U	3.7 U	3.7 U	3.9 U	4.2 U	4.2 U	4 U	4.1 U	4.1 U	3.8 U	3.5 U	3.8 U	3.8 U
DIBENZOFURAN	82 U	74 U	74 U	74 U	76 U	78 U	85 U	85 U	81 U	83 U	83 U	76 U	72 U	76 U	78 U
FLUORANTHENE	4 U	4 J	2.925 J	3.7 U	3.7 U	7 J	4.2 U	4.2 U	4 U	4.1 U	4.1 U	50	3.5 U	6 J	3.8 U
FLUORENE	4 U	3.7 U	3.7 U	3.7 U	3.7 U	3.9 U	4.2 U	4.2 U	4 U	4.1 U	4.1 U	3.8 U	3.5 U	3.8 U	3.8 U
INDENO(1,2,3-CD)PYRENE	4 U	3.7 U	3.7 U	3.7 U	3.7 U	3.9 U	4.2 U	4.2 U	4 U	4.1 U	4.1 U	24	3.5 U	5 J	3.8 U
NAPHTHALENE	4 U	3.7 U	3.7 U	3.7 U	3.7 U	3.9 U	4.2 U	4.2 U	4 U	4.1 U	4.1 U	4 J	3.5 U	3.8 U	3.8 U
PHENANTHRENE	4 U	3.7 U	3.7 U	3.7 U	3.7 U	3.9 U	4.2 U	4.2 U	4 U	4.1 U	4.1 U	12	3.5 U	3.8 U	3.8 U
PYRENE	4 U	5 J	3.425 J	3.7 U	3.7 U	7 J	4.2 U	4.2 U	4 U	4.1 U	4.1 U	55	3.5 U	10	3.8 U
SAFROLE	4600	74 U	74 U	74 U	76 U	78 U	1500	340 J	81 U	83 U	83 U	76 U	72 U	76 U	78 U
Herbicides (ug/kg)															
HEXACHLOROPHENE	1 U	0.94 U	0.94 U	0.94 U	0.96 U	0.99 U	1.1 U	1.1 U	1 U	1.1 U	1.1 U	0.97 U	0.91 U	0.97 U	0.99 U
PENTACHLOROPHENOL	0.55 U	0.5 U	0.5 U	0.5 U	0.51 U	0.53 U	2.5 J	8 J	0.55 U	0.56 U	0.56 U	0.51 U	0.48 U	0.51 U	0.52 U
Explosives (mg/kg)															
HMX	0.25 U	0.25 U	0.25 U	0.25 U	0.25 U	0.25 U	0.25 U	0.25 U	0.25 U	0.25 U	0.25 U	0.34 J	0.25 U	0.25 U	0.25 U
Dioxins/Furans (ng/kg)															
1,2,3,4,6,7,8,9-OCDD	3250	79.1	79.1		3300	2210	3950	3920	972	3130	3130	11500			
1,2,3,4,6,7,8,9-OCDF	0.5 U	0.3 U	0.3 U		17.7	14.2	0.7 U	0.4 U	1.1 U	7.5 J	7.5 J	4.2 J			
1,2,3,4,6,7,8-HPCDD	32.9	1.1 J	1.1 J		90.9	63.2	48.4	38.4	18	36.1	36.1	34			
1,2,3,4,6,7,8-HPCDF	0.49 J	0.2 U	0.2 U		6.2 U	3.6 J	0.28 U	0.2 U	0.72 J	2.7 J	2.7 J	2.1 J			
1,2,3,4,7,8,9-HPCDF	0.2 U	0.1 U	0.1 U		0.49 U	0.45 U	0.3 U	0.2 U	0.1 U	0.3 UJ	0.3 UJ	0.2 UJ			
1,2,3,4,7,8-HXCDD	0.34 U	0.1 U	0.1 U		1.5 J	0.82 U	0.56 U	0.2 U	0.35 J	1.2 J	1.2 J	0.2 U			
1,2,3,4,7,8-HXCDF	0.17 J	0.06 U	0.06 U		0.88 J	0.4 U	0.2 U	0.1 U	0.44 U	0.36 J	0.36 J	0.33 J			
1,2,3,6,7,8-HXCDD	0.52 U	0.1 U	0.1 U		2.5 J	1.6 J	0.86 U	0.2 U	0.49 J	1.8 J	1.8 J	0.2 U			
1,2,3,6,7,8-HXCDF	0.1 U	0.05 U	0.05 U		0.45 J	0.32 U	0.2 U	0.1 U	0.21 U	0.41 J	0.41 J	0.24 J			

APPENDIX A
POSITIVE HITS TABLE
SURFACE SOIL - ROUNDS 1 AND 2
SWMU 16 - B146 CAST HIGH EXPLOSIVES INCINERATOR
NSWC CRANE, INDIANA

LOCATION	16SB25	16SB26	16SB26	16SB26	16SB27	16SB28	16SB29	16SB30	16SB31	16SB32	16SB32	16SB33	16SB34	16SB35	16SB36
NSAMPLE	16SS250002	16SS260002	16SS260002-AVG	16SS260002-D	16SS270002	16SS280002	16SS290002	16SS300002	16SS310002	16SS320002	16SS320002-AVG	16SS330002	16SS340002	16SS350002	16SS360002
SAMPLE	16SS250002	16SS260002	16SS260002-AVG	FD04090302	16SS270002	16SS280002	16SS290002	16SS300002	16SS310002	16SS320002	16SS320002-AVG	16SS330002	16SS340002	16SS350002	16SS360002
MATRIX	SS	SS	SS	SS	SS	SS	SS	SS	SS	SS	SS	SS	SS	SS	SS
DEPTH RANGE	0 - 2	0 - 2	0 - 2	0 - 2	0 - 2	0 - 2	0 - 2	0 - 2	0 - 2	0 - 2	0 - 2	0 - 2	0 - 2	0 - 2	0 - 2
SAMPLE DATE	3/28/2003	4/9/2003	4/9/2003	4/9/2003	3/28/2003	3/28/2003	3/28/2003	3/28/2003	3/28/2003	4/9/2003	4/9/2003	4/9/2003	4/9/2003	3/28/2003	4/9/2003
VALIDATED	Y	Y	Y	Y	Y	Y	Y	Y	Y	Y	Y	Y	Y	Y	Y
COLLECTION METHOD	GRAB	GRAB	GRAB	GRAB	GRAB	GRAB	GRAB	GRAB	GRAB	GRAB	GRAB	GRAB	GRAB	GRAB	GRAB
1,2,3,7,8,9-HXCDD	0.72 J	0.1 U	0.1 U		4.7 J	2.4 J	1.1 U	0.59 J	0.61 J	2.8 J	2.8 J	0.95 J			
1,2,3,7,8,9-HXCDF	0.1 U	0.07 U	0.07 U		0.25 J	0.1 U	0.2 U	0.1 U	0.09 U	0.57 J	0.57 J	0.2 U			
1,2,3,7,8-PECDD	0.2 U	0.2 U	0.2 U		0.88 J	0.2 U	0.4 U	0.2 U	0.2 U	1.5 J	1.5 J	0.3 U			
2,3,4,6,7,8-HXCDF	0.1 U	0.06 U	0.06 U		0.75 J	0.28 U	0.2 U	0.1 U	0.27 J	0.33 J	0.33 J	0.1 U			
2,3,7,8-TCDF	0.1 U	0.08 U	0.08 U		0.75 J	0.29 U	0.2 U	0.1 U	0.09 U	0.1 U	0.1 U	0.1 U			
TOTAL HPCDD	68.4	2.3	2.3		302	235	87	66	34.4	73.1	73.1	83.1			
TOTAL HPCDF	0.49	0.2 U	0.2 U		17.9 J	11.7 J	0.28 U	0.2 U	1.2	6.5	6.5	3.8 J			
TOTAL HXCDD	6.1 J	0.1 U	0.1 U		45.9	32.9 J	8.3 J	4.4 J	5.9 J	14.7 J	14.7 J	2.6			
TOTAL HXCDF	0.17	0.2 U	0.2 U		11.7 J	4.5 J	0.2 U	0.1 U	1.7 J	5.5 J	5.5 J	2.7			
TOTAL PECDD	0.2 U	0.2 U	0.2 U		4.4 J	0.59	0.4 U	0.2 U	0.87	3.1 J	3.1 J	0.3 U			
TOTAL PECDF	0.2 U	2.3 J	2.3 J		5.1 J	1.3 J	0.3 U	0.2 U	1.5 J	6.3 J	6.3 J	2.5 J			
TOTAL TCDF	0.1 U	3.9 U	3.9 U		4.5 J	1.9 J	0.2 U	0.1 U	1 U	13.3 J	13.3 J	2.4 U			
Inorganics (mg/kg)															
ALUMINUM	13800 J	4060 J	3890 J	3720 J	4230 J	9480 J	16900 J	16200 J	5750 J	12000 J	12000 J	8020 J	1780 J	6760 J	11900 J
ANTIMONY	1.5 U	0.19 U	0.2375 J	0.38 J	0.27 U	0.66 U	2.8 U	1.2 U	1.6 U	0.79 J	0.79 J	1.1 J	0.51 J	0.75 U	0.55 J
ARSENIC	7.6 J	1.6 J	1.45 J	1.3 J	1.4 J	7.3 J	10.4 J	11.2 J	3.0 J	8.5 J	8.5 J	4.8 J	0.75 J	2.6 J	4.8 J
BARIUM	57.8 J	44.4 J	42.2 J	40.0 J	33.7 J	69.5 J	138 J	59.6 J	134 J	41.8 J	41.8 J	55.6 J	11.9 J	33.7 J	39.4 J
BERYLLIUM	0.46 U	0.81 J	0.785 J	0.76 J	0.37 U	0.63 J	0.53 J	0.52 J	0.28 U	0.38 J	0.38 J	0.43 J	0.06 U	0.20 U	0.23 J
CADMIUM	0.41 U	0.48 J	0.43 J	0.38 J	0.27 U	1.2 J	0.64 J	0.39 U	0.47 U	0.33 J	0.33 J	0.45 J	0.19 J	0.21 U	0.20 J
CALCIUM	496 J	831 J	2475.5 J	4120 J	858 J	1650 J	821 J	198 U	898 J	1100 J	1100 J	1980 J	212 J	727 J	1010 J
CHROMIUM	17.0 J	11.8 J	11.4 J	11.0 J	6.9 J	18.3 J	17.8 J	19.2 J	7.0 J	16.6 J	16.6 J	13.7 J	4.3 J	9.0 J	12.8 J
COBALT	4.1 J	20.0 J	19.05 J	18.1 J	1.4 J	4.1 J	7.2 J	5.1 J	1.9 J	4.2 J	4.2 J	2.5 J	1.5 J	1.3 J	2.7 J
COPPER	19.0 J	13.0 J	12.05 J	11.1 J	5.1 J	19.8 J	35.0 J	18.8 J	42.5 J	15.9 J	15.9 J	33.5 J	2.4 J	9.3 J	11.4 J
IRON	25000 J	19700 J	19900 J	20100 J	9380 J	23500 J	26300 J	29400 J	8870 J	22600 J	22600 J	23100 J	2170 J	11500 J	17100 J
LEAD	24.9 J	14.8 U	15.25 U	15.7 U	8.3 J	31.8 J	85.7 J	16.9 J	150 J	17.2 J	17.2 J	123 J	3.5 J	11.9 J	9.6 J
LITHIUM	10.5 J	10.7 J	10.3 J	9.9 J	4.3 J	9.7 J	13.1 J	12.7 J	5.6 U	9.0 J	9 J	4.0 J	0.81 J	4.2 J	6.0 J
MAGNESIUM	1440 J	687 J	1468.5 J	2250 J	793 J	1320 J	2080 J	2320 J	794 J	1910 J	1910 J	765 J	105 J	801 J	1210 J
MANGANESE	141 J	794 J	707 J	620 J	5.1 J	51.6 J	277 J	108 J	183 J	139 J	139 J	132 J	3.8 J	10.4 J	49.8 J
MERCURY	0.034 J	0.002 U	0.0075 U	0.013 U	0.003 U	0.008 U	0.053 J	0.084 J	0.033 J	0.035 J	0.035 J	0.030 J	0.002 U	0.008 U	0.030 J
NICKEL	9.8 J	24.8 J	22.35 J	19.9 J	3.5 J	12.1 J	15.5 J	13.2 J	5.0 J	10.4 J	10.4 J	5.2 J	0.71 J	3.5 J	6.5 J
POTASSIUM	664 J	751 J	718 J	685 J	466 J	462 J	827 J	807 J	400 J	496 J	496 J	266 J	312 J	311 J	378 J
SELENIUM	0.44 U	0.07 U	0.07 U	0.07 U	0.10 U	0.14 U	0.51 U	0.43 U	0.24 U	0.31 J	0.31 J	0.11 U	0.03 U	0.10 U	0.16 J
SILVER	0.04 U	0.09 U	0.14 U	0.19 U	0.14 U	0.03 U	0.06 U	0.06 U	0.06 U	0.11 U	0.11 U	0.28 J	0.16 U	0.02 U	0.07 U
SODIUM	16.2 U	27.6 U	31 U	34.4 U	29.3 U	26.0 U	19.4 U	22.3 U	28.5 U	33.8 U	33.8 U	23.0 U	12.7 U	20.6 U	20.5 U
STRONTIUM	21.8 J	13.5 J	15 J	16.5 J	48.0 J	136 J	82.8 J	10.4 J	86.2 J	18.7 J	18.7 J	39.8 J	4.5 J	27.1 J	38.6 J
THALLIUM	0.15 U	0.13 U	0.14 U	0.15 U	0.14 U	0.09 U	0.23 U	0.19 U	0.10 U	0.14 U	0.14 U	0.16 J	0.03 U	0.07 U	0.10 U
TIN	0.70 U	0.87 J	0.785 J	0.70 J	0.32 U	0.49 U	0.85 U	0.63 U	0.58 U	1.7 J	1.7 J	0.45 J	0.25 J	0.45 U	0.38 J
TITANIUM	99.9 J	29.6 J	27.8 J	26.0 J	10.2 J	32.0 J	147 J	210 J	57.3 J	145 J	145 J	54.8 J	12.2 J	24.8 J	84.1 J
VANADIUM	27.7 J	9.3 J	8.85 J	8.4 J	8.4 J	25.4 J	32.9 J	32.2 J	11.6 J	28.1 J	28.1 J	19.5 J	3.6 J	11.2 J	20.6 J
ZINC	97.2 J	49.0 J	47.35 J	45.7 J	24.3 U	144 U	401 U	68.2 J	633 J	40.6 J	40.6 J	193 U	5.2 U	23.5 U	24.1 J
Miscellaneous Parameters															
CATION EXCHANGE CAPACITY (MEQ/100)									15						
PH									5.8						
TOTAL ORGANIC CARBON (MG/KG)									4700 J						

APPENDIX A
POSITIVE HITS TABLE
SURFACE SOIL - ROUNDS 1 AND 2
SWMU 16 - B146 CAST HIGH EXPLOSIVES INCINERATOR
NSWC CRANE, INDIANA

LOCATION	16SB37	16SB38	16SB39	16SB42	16SB43	16SB44	16SB45	16SB45	16SB45	16SB46
NSAMPLE	16SS370002	16SS380002	16SS390002	16SS420002	16SS430002	16SS440002	16SS450002	16SS450002-AVG	16SS450002-D	16SS460002
SAMPLE	16SS370002	16SS380002	16SS390002	16SS420002	16SS430002	16SS440002	16SS450002	16SS450002-AVG	16FD12050302	16SS460002
MATRIX	SS	SS	SS	SS	SS	SS	SS	SS	SS	SS
DEPTH RANGE	0 - 2	0 - 2	0 - 2	0 - 2	0 - 2	0 - 2	0 - 2	0 - 2	0 - 2	0 - 2
SAMPLE DATE	3/28/2003	3/28/2003	3/28/2003	12/5/2003	12/5/2003	12/5/2003	12/5/2003	12/5/2003	12/5/2003	12/5/2003
VALIDATED	Y	Y	Y	Y	Y	Y	Y	Y	Y	Y
COLLECTION METHOD	GRAB	GRAB	GRAB	GRAB	GRAB	GRAB	GRAB	GRAB	GRAB	GRAB
Volatile Organics (ug/kg)										
ACETONE	1.1 UJ	1.1 UJ	1.2 UJ							
CIS-1,2-DICHLOROETHENE	1.1 U	1.1 U	23							
DICHLORODIFLUOROMETHANE	1.1 U	1.1 U	1.2 UJ							
STYRENE	1.1 U	1.1 U	1.2 U							
TOLUENE	1.1 U	1.1 U	1.2 U							
TRANS-1,2-DICHLOROETHENE	1.1 U	1.1 U	2 J							
TRICHLOROETHENE	1.1 U	6	86							
TRICHLOROFLUOROMETHANE	2 J	2 J	2 J							
VINYL ACETATE	1.1 U	1.1 U	1.2 U							
Semivolatile Organics (ug/kg)										
2-METHYLNAPHTHALENE	3.7 U	3.8 U	3.8 U							
ACENAPHTHENE	3.7 U	3.8 U	3.8 U							
ACENAPHTHYLENE	3.7 U	3.8 U	3.8 U							
ANTHRACENE	3.7 U	3.8 U	3.8 U							
BENZO(A)ANTHRACENE	5 J	3.8 U	3.8 U							
BENZO(A)PYRENE	5 J	3.8 U	4 J							
BENZO(B)FLUORANTHENE	5 J	3.8 U	9							
BENZO(G,H,I)PERYLENE	3.7 U	3.8 U	3.8 U							
BENZO(K)FLUORANTHENE	4 J	3.8 U	3.8 U							
BIS(2-ETHYLHEXYL)PHTHALATE	74 U	160 BU	170 BU							
CHRYSENE	4 J	3.8 U	7 J							
DIBENZO(A,H)ANTHRACENE	3.7 U	3.8 U	3.8 U							
DIBENZOFURAN	74 U	76 U	78 U							
FLUORANTHENE	4 J	3.8 U	3.8 U							
FLUORENE	3.7 U	3.8 U	3.8 U							
INDENO(1,2,3-CD)PYRENE	3.7 U	3.8 U	3.8 U							
NAPHTHALENE	3.7 U	3.8 U	3.8 U							
PHENANTHRENE	3.7 U	3.8 U	3.8 U							
PYRENE	5 J	3.8 U	5 J							
SAFROLE	74 U	76 U	78 U							
Herbicides (ug/kg)										
HEXACHLOROPHENE	0.94 U	0.97 U	0.99 U							
PENTACHLOROPHENOL	0.5 U	0.79 J	0.52 U							
Explosives (mg/kg)										
HMX	0.25 U	0.25 U	0.25 UJ							
Dioxins/Furans (ng/kg)										
1,2,3,4,6,7,8,9-OCDD										
1,2,3,4,6,7,8,9-OCDF										
1,2,3,4,6,7,8-HPCDD										
1,2,3,4,6,7,8-HPCDF										
1,2,3,4,7,8,9-HPCDF										
1,2,3,4,7,8-HXCDD										
1,2,3,4,7,8-HXCDF										
1,2,3,6,7,8-HXCDD										
1,2,3,6,7,8-HXCDF										

APPENDIX A
POSITIVE HITS TABLE
SURFACE SOIL - ROUNDS 1 AND 2
SWMU 16 - B146 CAST HIGH EXPLOSIVES INCINERATOR
NSWC CRANE, INDIANA

LOCATION	16SB37	16SB38	16SB39	16SB42	16SB43	16SB44	16SB45	16SB45	16SB45	16SB46
NSAMPLE	16SS370002	16SS380002	16SS390002	16SS420002	16SS430002	16SS440002	16SS450002	16SS450002-AVG	16SS450002-D	16SS460002
SAMPLE	16SS370002	16SS380002	16SS390002	16SS420002	16SS430002	16SS440002	16SS450002	16SS450002-AVG	16FD12050302	16SS460002
MATRIX	SS	SS	SS	SS	SS	SS	SS	SS	SS	SS
DEPTH RANGE	0 - 2	0 - 2	0 - 2	0 - 2	0 - 2	0 - 2	0 - 2	0 - 2	0 - 2	0 - 2
SAMPLE DATE	3/28/2003	3/28/2003	3/28/2003	12/5/2003	12/5/2003	12/5/2003	12/5/2003	12/5/2003	12/5/2003	12/5/2003
VALIDATED	Y	Y	Y	Y	Y	Y	Y	Y	Y	Y
COLLECTION METHOD	GRAB	GRAB	GRAB	GRAB	GRAB	GRAB	GRAB	GRAB	GRAB	GRAB
1,2,3,7,8,9-HXCDD										
1,2,3,7,8,9-HXCDF										
1,2,3,7,8-PECDD										
2,3,4,6,7,8-HXCDF										
2,3,7,8-TCDF										
TOTAL HPCDD										
TOTAL HPCDF										
TOTAL HXCDD										
TOTAL HXCDF										
TOTAL PECDD										
TOTAL PECDF										
TOTAL TCDF										
Inorganics (mg/kg)										
ALUMINUM	5470 J	10900 J	13800 J	16000 J	23200 J	15900 J	15800 J	16050 J	16300 J	22100 J
ANTIMONY	0.44 U	0.36 U	0.78 U	6.8 J	1.2 J	3.3 J	3.1 J	2.1 J	1.1 J	2.6 J
ARSENIC	1.9 J	5.4 J	8.8 J	5 J	8.3 J	5.4 J	10.4 J	10.15 J	9.9 J	8.6 J
BARIUM	17.6 J	81.9 J	83.4 J	188 J	111 J	215 J	170 J	144 J	118 J	112 J
BERYLLIUM	0.27 U	0.27 U	0.42 U	0.66 U	0.87 U	0.7 U	0.63 U	0.64 U	0.65 U	0.68 U
CADMIUM	0.13 U	0.30 U	0.28 U	2 J	0.47 U	1 U	0.71 U	0.62 U	0.53 U	0.7 U
CALCIUM	347 J	6750 J	808 J	1930 J	366 J	870 J	1090 J	947 J	804 J	725 J
CHROMIUM	7.6 J	13.0 J	15.9 J	23 J	24.3 J	16.9 J	22.7 J	23.1 J	23.5 J	26.2 J
COBALT	1.1 J	3.6 J	4.7 J	7 J	10.2 J	9.4 J	5.2 J	5.1 J	5 J	7.4 J
COPPER	5.3 J	13.9 J	13.1 J	115 J	19.2 J	72.9 J	32.2 J	29.55 J	26.9 J	33.1 J
IRON	8360 J	18100 J	24000 J	20900 J	24300 J	15100 J	25500 J	23700 J	21900 J	24600 J
LEAD	4.2 J	14.0 J	13.4 J	373 J	31.5 J	240 J	127 J	98 J	69 J	115 J
LITHIUM	4.3 U	7.6 J	10.7 J							
MAGNESIUM	553 J	2160 J	2130 J	1740 J	2700 J	1770 J	1350 J	1370 J	1390 J	2440 J
MANGANESE	6.8 J	91.6 J	256 J	318 J	446 J	797 J	213 J	187.5 J	162 J	241 J
MERCURY	0.004 U	0.021 U	0.048 J	0.045 J	0.037 J	0.035 J	0.037 J	0.0365 J	0.036 J	0.025 J
NICKEL	2.9 J	10.4 J	11.1 J	14.7 J	17.5 J	14.1 J	10.6 J	10.55 J	10.5 J	16.1 J
POTASSIUM	206 J	470 J	672 J	1480 J	1830 J	1220 J	1780 J	1815 J	1850 J	1810 J
SELENIUM	0.06 U	0.14 U	0.47 U	0.4 U	0.52 U	0.37 U	0.82 U	0.735 U	0.65 U	0.47 U
SILVER	0.02 U	0.02 U	0.13 U	0.16 U	0.09 U	0.08 U	0.06 U	0.055 U	0.05 U	0.08 U
SODIUM	22.7 U	39.7 U	43.7 U	42.7 U	39.6 U	30.5 U	203 J	113.475 J	47.9 U	53 U
STRONTIUM	7.0 J	48.8 J	13.5 J							
THALLIUM	0.06 U	0.10 U	0.19 U	0.27 U	0.32 U	0.25 U	0.24 U	0.235 U	0.23 U	0.29 U
TIN	0.39 U	0.40 U	0.60 U	1.9 J	0.82 U	1.1 J	0.83 U	0.72 U	0.61 U	0.92 U
TITANIUM	29.0 J	135 J	143 J	92.3 J	256 J	196 J	76 J	78.7 J	81.4 J	247 J
VANADIUM	10.2 J	20.1 J	27.3 J	30.1 J	42.6 J	27.9 J	31.8 J	33 J	34.2 J	42.9 J
ZINC	7.6 U	42.6 U	42.1 U	1840 J	144 J	967 J	455 J	396 J	337 J	260 J
Miscellaneous Parameters										
CATION EXCHANGE CAPACITY (MEQ/100)	21									
PH	5.2									
TOTAL ORGANIC CARBON (MG/KG)	1000 J									

SWMU 16
SUBSURFACE SOIL

APPENDIX A
POSITIVE HITS TABLE
SUBSURFACE SOIL - ROUNDS 1 AND 2
SWMU 16 - B146 CAST HIGH EXPLOSIVES INCINERATOR
NSWC CRANE, INDIANA

LOCATION	16SB01	16SB02	16SB11	16SB12	16SB13	16SB17	16SB18	16SB19	16SB22	16SB23	16SB23
NSAMPLE	16SB010406	16SB020406	16SB110204	16SB120204	16SB130204	16SB170204	16SB180203	16SB190203	16SB220203	16SB230203	16SB230203-AVG
SAMPLE	16SB010406	16SB020406	16SB110204	16SB120204	16SB130204	16SB170204	16SB180203	16SB190203	16SB220203	16SB230203	16SB230203-AVG
MATRIX	SB	SB	SB	SB	SB	SB	SB	SB	SB	SB	SB
DEPTH RANGE	4 - 6	4 - 6	2 - 4	2 - 4	2 - 4	2 - 4	2 - 3	2 - 3	2 - 3	2 - 3	2 - 3
SAMPLE DATE	3/27/2003	3/27/2003	3/27/2003	3/28/2003	3/28/2003	3/27/2003	3/28/2003	3/28/2003	3/28/2003	3/28/2003	3/28/2003
VALIDATED	Y	Y	Y	Y	Y	Y	Y	Y	Y	Y	Y
COLLECTION METHOD	GRAB	GRAB	GRAB	GRAB	GRAB	GRAB	GRAB	GRAB	GRAB	GRAB	GRAB
Volatile Organics (ug/kg)											
ACETONE	1.2 UJ	1.1 UJ									
CIS-1,2-DICHLOROETHENE	1.2 U	1.1 U									
DICHLORODIFLUOROMETHANE	1.2 U	1.1 UJ									
TOTAL XYLENES	1.2 U	1.1 U									
TRANS-1,2-DICHLOROETHENE	1.2 U	1.1 U									
TRICHLOROETHENE	1.2 U	1.1 U									
TRICHLOROFLUOROMETHANE	2 J	2 J									
Semivolatile Organics (ug/kg)											
2-METHYLNAPHTHALENE	3.9 U	3.7 U	3.8 U	4.1 U	3.9 U	3.7 U	3.9 U	3.8 U	3.8 U	3.9 U	3.85 U
ANTHRACENE	3.9 U	3.7 U	3.8 U	4.1 U	3.9 U	3.7 U	3.9 U	3.8 U	3.8 U	3.9 U	3.475 J
BENZO(A)ANTHRACENE	3.9 U	3.7 U	3.8 U	4.1 U	3.9 U	3.7 U	3.9 U	3.8 U	3.8 U	3.9 UJ	19.975 J
BENZO(A)PYRENE	3.9 U	3.7 U	3.8 U	4.1 U	3.9 U	3.7 U	3.9 U	3.8 U	3.8 U	3.9 UJ	21.475 J
BENZO(B)FLUORANTHENE	3.9 U	3.7 U	3.8 U	4.1 U	3.9 U	3.7 U	3.9 U	3.8 U	3.8 U	3.9 UJ	24.475 J
BENZO(G,H,I)PERYLENE	3.9 U	3.7 U	3.8 U	4.1 U	3.9 U	3.7 U	3.9 U	3.8 U	3.8 U	3.9 UJ	9.475 J
BENZO(K)FLUORANTHENE	3.9 U	3.7 U	3.8 U	4.1 U	3.9 U	3.7 U	3.9 U	3.8 U	3.8 U	3.9 UJ	11.975 J
BIS(2-ETHYLHEXYL)PHTHALATE	80 U	130 J	77 U	83 U	80 U	250 BU	390 BU	260 BU	77 U	81 BU	81 BU
CHRYSENE	3.9 U	3.7 U	3.8 U	4.1 U	3.9 U	3.7 U	3.9 U	3.8 U	3.8 U	3.9 UJ	21.475 J
DIBENZO(A,H)ANTHRACENE	3.9 U	3.7 U	3.8 U	4.1 U	3.9 U	3.7 U	3.9 U	3.8 U	3.8 U	3.9 U	3.975 J
FLUORANTHENE	3.9 U	3.7 U	3.8 U	4.1 U	3.9 U	3.7 U	3.9 U	3.8 U	3.8 U	3.9 UJ	25.475 J
FLUORENE	3.9 U	3.7 U	3.8 U	4.1 U	3.9 U	3.7 U	3.9 U	3.8 U	3.8 U	3.9 U	3.475 J
INDENO(1,2,3-CD)PYRENE	3.9 U	3.7 U	3.8 U	4.1 U	3.9 U	3.7 U	3.9 U	3.8 U	3.8 U	3.9 U	8.475
ISOSAFROLE	80 U	76 U	77 U	83 U	80 U	74 U	80 U	76 U	77 U	79 U	78.5 U
NAPHTHALENE	3.9 U	3.7 U	3.8 U	4.1 U	3.9 U	3.7 U	3.9 U	3.8 U	3.8 U	3.9 U	3.85 U
PHENANTHRENE	3.9 U	3.7 U	3.8 U	4.1 U	3.9 U	3.7 U	3.9 U	3.8 U	3.8 U	3.9 UJ	8.975 J
PYRENE	3.9 U	3.7 U	3.8 U	4.1 U	3.9 U	3.7 U	3.9 U	3.8 U	3.8 U	3.9 UJ	29.975 J
SAFROLE	80 U	76 U	77 U	83 U	80 U	74 U	80 U	76 U	77 U	480	259.5
Herbicides (ug/kg)											
HEXACHLOROPHENE	1 U	0.68 U	0.98 U	1 U	1 U	0.94 U	1 U	0.97 U	0.98 U	1 U	0.995 U
PENTACHLOROPHENOL	0.54 U	0.51 U	0.52 U	0.55 U	0.54 U	0.5 U	0.54 U	0.51 U	0.52 U	0.53 U	0.525 U
Inorganics (mg/kg)											
ALUMINUM	8090 J	13800 J	7110 J	13500 J	12900 J	5160 J	3520 J	6040 J	2120 J	8380 J	6560 J

APPENDIX A
POSITIVE HITS TABLE
SUBSURFACE SOIL - ROUNDS 1 AND 2
SWMU 16 - B146 CAST HIGH EXPLOSIVES INCINERATOR
NSWC CRANE, INDIANA

LOCATION	16SB01	16SB02	16SB11	16SB12	16SB13	16SB17	16SB18	16SB19	16SB22	16SB23	16SB23
NSAMPLE	16SB010406	16SB020406	16SB110204	16SB120204	16SB130204	16SB170204	16SB180203	16SB190203	16SB220203	16SB230203	16SB230203-AVG
SAMPLE	16SB010406	16SB020406	16SB110204	16SB120204	16SB130204	16SB170204	16SB180203	16SB190203	16SB220203	16SB230203	16SB230203-AVG
MATRIX	SB	SB	SB	SB	SB	SB	SB	SB	SB	SB	SB
DEPTH RANGE	4 - 6	4 - 6	2 - 4	2 - 4	2 - 4	2 - 4	2 - 3	2 - 3	2 - 3	2 - 3	2 - 3
SAMPLE DATE	3/27/2003	3/27/2003	3/27/2003	3/28/2003	3/28/2003	3/27/2003	3/28/2003	3/28/2003	3/28/2003	3/28/2003	3/28/2003
VALIDATED	Y	Y	Y	Y	Y	Y	Y	Y	Y	Y	Y
COLLECTION METHOD	GRAB	GRAB	GRAB	GRAB	GRAB	GRAB	GRAB	GRAB	GRAB	GRAB	GRAB
ANTIMONY	0.52 U	0.31 U	0.39 U	0.71 U	0.41 U	0.31 U	0.51 U	0.24 U	0.14 U	0.24 U	0.285 U
ARSENIC	2.7 J	3.2 J	3.3 J	8.3 J	3.5 J	1.8 J	5.9 J	2.3 J	0.63 J	4.1 J	3.05 J
BARIUM	20.6 J	76.3 J	34.8 J	40.2 J	91.8 J	23.0 J	32.6 J	33.2 J	20.0 J	30.9 J	26.1 J
BERYLLIUM	0.38 U	0.50 J	0.33 U	0.53 U	0.88 J	0.87 J	2.4 J	0.41 U	0.40 U	0.31 U	0.245 U
CADMIUM	0.16 U	0.18 U	0.17 U	0.19 U	0.22 J	0.24 U	0.74 J	0.13 U	0.10 U	0.16 U	0.13 U
CALCIUM	468 J	602 J	334 J	143 J	380 U	607 J	1510 J	234 J	218 J	68.7 J	49.025 J
CHROMIUM	11.9 J	17.8 J	11.3 J	16.0 J	25.1 J	11.8 J	20.2 J	10.7 J	6.0 J	12.4 J	9.55 J
COBALT	1.7 J	2.2 J	3.0 J	3.7 J	2.9 J	15.7 J	7.0 J	3.0 J	2.4 J	3.0 J	2.4 J
COPPER	6.7 J	6.7 J	8.7 J	13.2 J	19.3 J	15.5 J	34.8 J	6.8 J	3.6 J	8.6 J	6.9 J
IRON	14800 J	15100 J	15900 J	24600 J	13400 J	20500 J	8520 J	12500 J	12800 J	16900 J	13285 J
LEAD	6.0 J	7.2 J	8.1 J	10.3 J	9.5 J	6.1 J	14.2 J	6.3 J	3.4 J	7.3 J	5.65 J
LITHIUM	5.9 U	11.8 J	7.0 J	9.9 J	12.4 J	23.6 J	6.9 J	5.6 U	2.0 U	6.3 U	5.25 U
MAGNESIUM	939 J	1070 J	1250 J	1970 J	1260 J	1330 J	910 J	849 J	535 J	1350 J	1068 J
MANGANESE	28.8 J	10.0 J	82.0 J	111 J	7.3 J	254 J	47.2 J	64.4 J	87.9 J	81.3 J	57.35 J
MERCURY	0.012 U	0.023 J	0.003 U	0.069 J	0.013 J	0.031 J	0.079 J	0.003 U	0.004 U	0.003 U	0.01775 J
NICKEL	4.8 J	6.8 J	7.2 J	10.2 J	14.7 J	35.6 J	25.1 J	6.3 J	6.5 J	6.8 J	5.4 J
POTASSIUM	245 J	621 J	366 J	646 J	2070 J	867 J	413 J	325 J	350 J	407 J	326 J
SELENIUM	0.06 U	0.11 U	0.10 U	0.38 U	0.24 U	0.07 U	0.63 J	0.10 U	0.02 U	0.15 U	0.115 U
SILVER	0.11 U	0.03 U	0.04 U	0.14 U	0.14 U	0.03 U	0.05 U	0.02 U	0.05 U	0.02 U	0.02 U
SODIUM	70.8 U	75.8 U	34.3 U	28.4 U	46.2 U	32.5 U	52.5 U	23.1 U	29.6 U	18.9 U	15.85 U
STRONTIUM	4.9 J	13.6 J	4.6 J	5.6 J	21.8 J	5.3 J	9.9 J	4.0 J	7.9 J	3.8 J	3.25 J
TIN	0.67 U	0.57 U	0.52 U	0.56 U	0.50 U	0.47 U	0.34 U	0.31 U	0.36 U	0.36 U	0.385 U
TITANIUM	75.9 J	58.5 J	82.1 J	162 J	43.5 J	36.7 J	13.8 J	43.1 J	12.2 J	106 J	81.15 J
VANADIUM	17.5 J	24.0 J	15.6 J	25.8 J	21.3 J	7.9 J	6.9 J	12.3 J	5.5 J	17.5 J	13.7 J
ZINC	10.2 J	11.8 U	20.6 J	35.9 J	15.2 U	59.0 J	17.8 J	14.0 J	15.6 J	20.2 J	16.15 J
Miscellaneous Parameters											
CATION EXCHANGE CAPACITY (MEQ/100)		24		25			24				
PH		5		5.1			5.8				
TOTAL ORGANIC CARBON (MG/KG)		3400 J		5300 J			14000 J				

APPENDIX A
POSITIVE HITS TABLE
SUBSURFACE SOIL - ROUNDS 1 AND 2
SWMU 16 - B146 CAST HIGH EXPLOSIVES INCINERATOR
NSWC CRANE, INDIANA

LOCATION	16SB23	16SB24	16SB25	16SB26	16SB26	16SB26	16SB27	16SB28	16SB29	16SB30	16SB32
NSAMPLE	16SB230203-D	16SB240203	16SB250203	16SB260204	16SB260204-AVG	16SB260204-D	16SB270203	16SB280203	16SB290203	16SB300203	16SB320204
SAMPLE	FD03280302	16SB240203	16SB250203	16SB260204	16SB260204-AVG	FD04090303	16SB270203	16SB280203	16SB290203	16SB300203	16SB320204
MATRIX	SB	SB	SB	SB	SB	SB	SB	SB	SB	SB	SB
DEPTH RANGE	2 - 3	2 - 3	2 - 3	2 - 4	2 - 4	2 - 4	2 - 3	2 - 3	2 - 3	2 - 3	2 - 4
SAMPLE DATE	3/28/2003	3/28/2003	3/28/2003	4/9/2003	4/9/2003	4/9/2003	3/28/2003	3/28/2003	3/28/2003	3/28/2003	4/9/2003
VALIDATED	Y	Y	Y	Y	Y	Y	Y	Y	Y	Y	Y
COLLECTION METHOD	GRAB	GRAB	GRAB	GRAB	GRAB	GRAB	GRAB	GRAB	GRAB	GRAB	GRAB
Volatile Organics (ug/kg)											
ACETONE											
CIS-1,2-DICHLOROETHENE											
DICHLORODIFLUOROMETHANE											
TOTAL XYLENES											
TRANS-1,2-DICHLOROETHENE											
TRICHLOROETHENE											
TRICHLOROFLUOROMETHANE											
Semivolatile Organics (ug/kg)											
2-METHYLNAPHTHALENE	3.8 U	3.8 U	3.9 U	3.5 U	3.5 U	3.5 U	3.6 U	3.7 U	4 U	4 U	3.9 U
ANTHRACENE	5 J	3.8 U	3.9 U	3.5 U	3.5 U	3.5 U	3.6 U	3.7 U	4 U	4 U	3.9 U
BENZO(A)ANTHRACENE	38 J	3.8 U	3.9 U	3.5 U	3.5 U	3.5 U	3.6 U	3.7 U	4 U	4 U	3.9 U
BENZO(A)PYRENE	41 J	3.8 U	3.9 U	3.5 U	3.5 U	3.5 U	3.6 U	3.7 U	4 U	4 U	3.9 U
BENZO(B)FLUORANTHENE	47 J	3.8 U	3.9 U	3.5 UJ	3.5 UJ	3.5 UJ	3.6 U	3.7 U	4 U	4 U	3.9 UJ
BENZO(G,H,I)PERYLENE	17 J	3.8 U	3.9 U	3.5 U	3.5 U	3.5 U	3.6 U	3.7 U	4 U	4 U	3.9 U
BENZO(K)FLUORANTHENE	22 J	3.8 U	3.9 U	3.5 U	3.5 U	3.5 U	3.6 U	3.7 U	4 U	4 U	3.9 U
BIS(2-ETHYLHEXYL)PHTHALATE	86 BU	130 BU	480 BU	70 U	70.5 U	71 U	91 BU	150 BU	82 U	420 BU	80 U
CHRYSENE	41 J	3.8 U	3.9 U	3.5 U	3.5 U	3.5 U	3.6 U	3.7 U	4 U	4 U	3.9 U
DIBENZO(A,H)ANTHRACENE	6 J	3.8 U	3.9 U	3.5 U	3.5 U	3.5 U	3.6 U	3.7 U	4 U	4 U	3.9 U
FLUORANTHENE	49 J	3.8 U	3.9 U	3.5 U	3.5 U	3.5 U	3.6 U	3.7 U	4 U	4 U	3.9 U
FLUORENE	5 J	3.8 U	3.9 U	3.5 U	3.5 U	3.5 U	3.6 U	3.7 U	4 U	4 U	3.9 U
INDENO(1,2,3-CD)PYRENE	15	3.8 U	3.9 U	3.5 U	3.5 U	3.5 U	3.6 U	3.7 U	4 U	4 U	3.9 U
ISOSAFROLE	78 U	76 U	80 U	70 U	70.5 U	71 U	73 U	75 U	82 U	81 U	80 U
NAPHTHALENE	3.8 U	3.8 U	3.9 U	3.5 U	3.5 U	3.5 U	3.6 U	3.7 U	4 U	4 U	3.9 U
PHENANTHRENE	16 J	3.8 U	3.9 U	3.5 U	3.5 U	3.5 U	3.6 U	3.7 U	4 U	4 U	3.9 U
PYRENE	58 J	3.8 U	3.9 U	3.5 U	3.5 U	3.5 U	3.6 U	3.7 U	4 U	4 U	3.9 U
SAFROLE	78 U	76 U	80 U	70 U	70.5 U	71 U	73 U	75 U	82 U	81 U	80 U
Herbicides (ug/kg)											
HEXACHLOROPHENE	0.99 U	0.97 U	1 U	0.96 J	0.925 J	0.89 J	0.93 U	0.96 U	1 U	1 U	1 U
PENTACHLOROPHENOL	0.52 U	0.51 U	0.53 U	0.47 U	0.47 U	0.47 U	0.49 U	0.51 U	0.55 U	1.6 J	0.54 U
Inorganics (mg/kg)											
ALUMINUM	4740 J	6110 J	9170 J	3610 J	3490 J	3370 J	1540 J	2540 J	9780 J	9080 J	10300 J

APPENDIX A
POSITIVE HITS TABLE
SUBSURFACE SOIL - ROUNDS 1 AND 2
SWMU 16 - B146 CAST HIGH EXPLOSIVES INCINERATOR
NSWC CRANE, INDIANA

LOCATION	16SB23	16SB24	16SB25	16SB26	16SB26	16SB26	16SB27	16SB28	16SB29	16SB30	16SB32
NSAMPLE	16SB230203-D	16SB240203	16SB250203	16SB260204	16SB260204-AVG	16SB260204-D	16SB270203	16SB280203	16SB290203	16SB300203	16SB320204
SAMPLE	FD03280302	16SB240203	16SB250203	16SB260204	16SB260204-AVG	FD04090303	16SB270203	16SB280203	16SB290203	16SB300203	16SB320204
MATRIX	SB	SB	SB	SB	SB	SB	SB	SB	SB	SB	SB
DEPTH RANGE	2 - 3	2 - 3	2 - 3	2 - 4	2 - 4	2 - 4	2 - 3	2 - 3	2 - 3	2 - 3	2 - 4
SAMPLE DATE	3/28/2003	3/28/2003	3/28/2003	4/9/2003	4/9/2003	4/9/2003	3/28/2003	3/28/2003	3/28/2003	3/28/2003	4/9/2003
VALIDATED	Y	Y	Y	Y	Y	Y	Y	Y	Y	Y	Y
COLLECTION METHOD	GRAB	GRAB	GRAB	GRAB	GRAB	GRAB	GRAB	GRAB	GRAB	GRAB	GRAB
ANTIMONY	0.33 U	0.28 U	0.57 U	0.14 U	0.16 U	0.18 U	0.97 U	0.19 U	0.41 U	0.48 U	0.51 J
ARSENIC	2.0 J	2.2 J	3.5 J	1.6 J	1.6 J	1.6 J	0.35 J	1.0 J	5.6 J	5.6 J	10.2 J
BARIUM	21.3 J	26.5 J	33.2 J	24.1 J	25.55 J	27.0 J	9.4 J	9.1 J	42.5 J	37.6 J	119 J
BERYLLIUM	0.18 U	0.32 U	0.53 U	0.62 J	0.655 J	0.69 J	0.17 U	0.75 J	0.37 U	0.33 U	0.75 J
CADMIUM	0.10 U	0.12 U	0.20 U	0.32 J	0.345 J	0.37 J	0.09 U	0.17 U	0.18 U	0.18 U	0.43 J
CALCIUM	58.7 U	139 J	312 J	420 J	381.5 J	343 J	204 J	199 J	184 J	122 J	1040 J
CHROMIUM	6.7 J	9.4 J	15.4 J	9.1 J	9.1 J	9.1 J	5.1 J	8.0 J	11.6 J	11.9 J	13.6 J
COBALT	1.8 J	2.4 J	2.5 J	13.9 J	18.25 J	22.6 J	0.54 J	7.9 J	3.2 J	3.3 J	7.8 J
COPPER	5.2 J	7.8 J	10.0 J	10.8 J	10.75 J	10.7 J	3.9 J	6.8 J	11.5 J	11.2 J	17.1 J
IRON	9670 J	13500 J	21500 J	8210 J	8230 J	8250 J	3630 J	21800 J	15400 J	16900 J	18200 J
LEAD	4.0 J	5.8 J	7.4 J	7.9 U	6.375 J	8.8 J	4.4 J	6.4 J	6.5 J	8.3 J	20.1 J
LITHIUM	4.2 U	4.6 U	7.1 J	11.6 J	11.5 J	11.4 J	2.1 U	4.1 U	6.3 U	5.9 U	8.3 J
MAGNESIUM	786 J	955 J	1010 J	737 J	722 J	707 J	279 J	628 J	1930 J	1740 J	1440 J
MANGANESE	33.4 J	44.6 J	9.8 J	286 J	403 J	520 J	3.2 J	35.9 J	55.9 J	77.8 J	143 J
MERCURY	0.034 J	0.005 U	0.010 U	0.004 J	0.004 J	0.006 U	0.002 U	0.006 U	0.074 J	0.007 U	0.017 J
NICKEL	4.0 J	5.6 J	5.7 J	16.6 J	17.35 J	18.1 J	2.0 J	20.8 J	8.5 J	7.6 J	10.4 J
POTASSIUM	245 J	334 J	383 J	752 J	760.5 J	769 J	487 J	333 J	487 J	458 J	461 J
SELENIUM	0.08 U	0.08 U	0.10 U	0.04 U	0.06 U	0.08 U	0.03 U	0.06 U	0.12 U	0.19 U	0.22 J
SILVER	0.02 U	0.02 U	0.03 U	0.14 U	0.145 J	0.22 J	0.02 U	0.06 U	0.03 U	0.03 U	0.05 U
SODIUM	12.8 U	13.9 U	30.3 U	26.0 U	27.45 U	28.9 U	23.6 U	15.8 U	26.9 U	23.1 U	50.5 J
STRONTIUM	2.7 J	4.3 J	5.4 J	11.0 J	11.15 J	11.3 J	2.8 J	3.1 J	5.8 J	4.7 J	19.6 J
TIN	0.41 U	0.36 U	0.60 U	0.31 J	0.365 J	0.42 J	0.22 U	0.32 U	0.49 U	0.50 U	1.3 J
TITANIUM	56.3 J	63.5 J	47.7 J	25.1 J	24.55 J	24.0 J	16.7 J	15.3 J	131 J	121 J	74.4 J
VANADIUM	9.9 J	12.0 J	18.0 J	5.9 J	5.75 J	5.6 J	2.9 J	7.4 J	16.7 J	17.9 J	21.6 J
ZINC	12.1 J	17.5 J	11.5 J	48.9 J	49.05 J	49.2 J	4.5 U	59.6 J	29.1 J	27.9 J	31.2 J
Miscellaneous Parameters											
CATION EXCHANGE CAPACITY (MEQ/100)		18									
PH		4.9									
TOTAL ORGANIC CARBON (MG/KG)		4700 J									

APPENDIX A
POSITIVE HITS TABLE
SUBSURFACE SOIL - ROUNDS 1 AND 2
SWMU 16 - B146 CAST HIGH EXPLOSIVES INCINERATOR
NSWC CRANE, INDIANA

LOCATION	16SB33	16SB34	16SB36	16SB38	16SB39	16SB40	16SB40	16SB40	16SB40	16SB41	16SB41
NSAMPLE	16SB330204	16SB340203	16SB360203	16SB380203	16SB390203	16SB400506	16SB400608	16SB400608-AVG	16SB400608-D	16SB410305	16SB410507
SAMPLE	16SB330204	16SB340203	16SB360203	16SB380203	16SB390203	16SB400506	16SB400608	16SB400608-AVG	FD03280303	16SB410305	16SB410507
MATRIX	SB	SB	SB	SB	SB	SB	SB	SB	SB	SB	SB
DEPTH RANGE	2 - 4	2 - 3	2 - 3	2 - 3	2 - 3	5 - 6	6 - 8	6 - 8	6 - 8	3 - 5	5 - 7
SAMPLE DATE	4/9/2003	4/9/2003	4/9/2003	3/28/2003	3/28/2003	3/28/2003	3/28/2003	3/28/2003	3/28/2003	3/27/2003	3/27/2003
VALIDATED	Y	Y	Y	Y	Y	Y	Y	Y	Y	Y	Y
COLLECTION METHOD	GRAB	GRAB	GRAB	GRAB	GRAB	GRAB	GRAB	GRAB	GRAB	GRAB	GRAB
Volatile Organics (ug/kg)											
ACETONE			1.2 UJ	1.1 UJ	1.2 UJ	1.2 UJ	1.2 UJ	1.2 UJ	1.2 UJ	4 J	14 J
CIS-1,2-DICHLOROETHENE			1.2 U	1.1 U	200	1.2 U	1.2 U	1.2 U	1.2 U	1.2 U	1.2 U
DICHLORODIFLUOROMETHANE			1.2 UJ	1.1 U	1.2 UJ	1.2 UJ	1.2 UJ	1.2 UJ	1.2 UJ	1.2 U	1.2 U
TOTAL XYLENES			1.2 U	1.1 U	1.2 U	1.2 U	1.2 U	1.2 U	1.2 U	1.2 U	1.2 U
TRANS-1,2-DICHLOROETHENE			1.2 U	1.1 U	12	1.2 U	1.2 U	1.2 U	1.2 U	1.2 U	1.2 U
TRICHLOROETHENE			1.2 U	4	280	1.2 U	1.2 U	1.2 U	1.2 U	1.2 U	1.2 U
TRICHLOROFLUOROMETHANE			1.2 U	2 J	2 J	2 J	2 J	2.5 J	3 J	1.2 U	2 J
Semivolatile Organics (ug/kg)											
2-METHYLNAPHTHALENE	3.8 U	3.7 U	3.8 U	3.7 U	4.1 U	3.9 U	3.9 U	3.95 U	4 U	4 U	4 J
ANTHRACENE	3.8 U	3.7 U	3.8 U	3.7 U	4.1 U	3.9 U	3.9 U	3.95 U	4 U	4 U	4.1 U
BENZO(A)ANTHRACENE	4 J	7 J	3.8 U	3.7 U	4.1 U	3.9 U	3.9 U	3.95 U	4 U	4 U	4.1 U
BENZO(A)PYRENE	6 J	10	3.8 U	3.7 U	4.1 U	3.9 U	3.9 U	3.95 U	4 U	4 U	4.1 U
BENZO(B)FLUORANTHENE	8 J	16 J	3.8 UJ	3.7 U	4.1 U	3.9 U	3.9 U	3.95 U	4 U	4 U	4.1 U
BENZO(G,H,I)PERYLENE	3.8 U	6 J	3.8 U	3.7 U	4.1 U	3.9 U	3.9 U	3.95 U	4 U	4 U	4.1 U
BENZO(K)FLUORANTHENE	6 J	13	3.8 U	3.7 U	4.1 U	3.9 U	3.9 U	3.95 U	4 U	4 U	4.1 U
BIS(2-ETHYLHEXYL)PHTHALATE	80 BU	74 U	110 BU	150 BU	1000 BU	1400 BJ	660 BU	350 BU	350 BU	81 U	86 J
CHRYSENE	6 J	10	3.8 U	3.7 U	4.1 U	3.9 U	3.9 U	3.95 U	4 U	4 U	8
DIBENZO(A,H)ANTHRACENE	3.8 U	3.7 U	3.8 U	3.7 U	4.1 U	3.9 U	3.9 U	3.95 U	4 U	4 U	4.1 U
FLUORANTHENE	6 J	9	3.8 U	3.7 U	4.1 U	3.9 U	3.9 U	3.95 U	4 U	4 U	4.1 U
FLUORENE	3.8 U	3.7 U	3.8 U	3.7 U	4.1 U	3.9 U	3.9 U	3.95 U	4 U	4 U	4.1 U
INDENO(1,2,3-CD)PYRENE	3.8 U	6 J	3.8 U	3.7 U	4.1 U	3.9 U	3.9 U	3.95 U	4 U	4 U	4.1 U
ISOSAFROLE	76 U	74 U	77 U	75 U	82 U	80 U	80 U	80.5 U	81 U	81 U	150 J
NAPHTHALENE	3.8 U	3.7 U	3.8 U	3.7 U	5 J	3.9 U	3.9 U	3.95 U	4 U	4 U	6 J
PHENANTHRENE	3.8 U	3.7 U	3.8 U	3.7 U	4.1 U	3.9 U	3.9 U	3.95 U	4 U	4 U	6 J
PYRENE	7 J	12	3.8 U	3.7 U	4.1 U	3.9 U	3.9 U	3.95 U	4 U	4 U	6 J
SAFROLE	76 U	74 U	77 U	75 U	82 U	80 U	80 U	80.5 U	81 U	81 U	67000
Herbicides (ug/kg)											
HEXACHLOROPHENE	0.97 U	0.94 U	0.98 U	0.96 U	1 U	1 U	1 U	1 U	1 U	0.73 U	0.74 U
PENTACHLOROPHENOL	0.51 U	0.5 U	0.52 U	0.51 U	0.55 U	0.54 U	0.54 U	0.545 U	0.55 U	0.55 U	0.56 U
Inorganics (mg/kg)											
ALUMINUM	5330 J	4790 J	7450 J	4530 J	12600 J	9140 J	8330 J	9815 J	11300 J	18600 J	11800 J

APPENDIX A
POSITIVE HITS TABLE
SUBSURFACE SOIL - ROUNDS 1 AND 2
SWMU 16 - B146 CAST HIGH EXPLOSIVES INCINERATOR
NSWC CRANE, INDIANA

LOCATION	16SB33	16SB34	16SB36	16SB38	16SB39	16SB40	16SB40	16SB40	16SB40	16SB41	16SB41
NSAMPLE	16SB330204	16SB340203	16SB360203	16SB380203	16SB390203	16SB400506	16SB400608	16SB400608-AVG	16SB400608-D	16SB410305	16SB410507
SAMPLE	16SB330204	16SB340203	16SB360203	16SB380203	16SB390203	16SB400506	16SB400608	16SB400608-AVG	FD03280303	16SB410305	16SB410507
MATRIX	SB	SB	SB	SB	SB	SB	SB	SB	SB	SB	SB
DEPTH RANGE	2 - 4	2 - 3	2 - 3	2 - 3	2 - 3	5 - 6	6 - 8	6 - 8	6 - 8	3 - 5	5 - 7
SAMPLE DATE	4/9/2003	4/9/2003	4/9/2003	3/28/2003	3/28/2003	3/28/2003	3/28/2003	3/28/2003	3/28/2003	3/27/2003	3/27/2003
VALIDATED	Y	Y	Y	Y	Y	Y	Y	Y	Y	Y	Y
COLLECTION METHOD	GRAB	GRAB	GRAB	GRAB	GRAB	GRAB	GRAB	GRAB	GRAB	GRAB	GRAB
ANTIMONY	0.25 U	0.33 J	0.62 J	0.40 U	1.5 U	0.54 U	0.57 U	0.655 U	0.74 U	0.75 U	0.33 U
ARSENIC	2.1 J	2.8 J	2.6 J	2.4 J	7.9 J	5.7 J	4.6 J	5.9 J	7.2 J	6.0 J	9.4 J
BARIUM	30.2 J	34.7 J	45.3 J	26.7 J	58.2 J	58.2 J	72.2 J	70.4 J	68.6 J	76.8 J	36.5 J
BERYLLIUM	0.20 J	0.25 J	0.37 J	0.25 U	0.39 U	0.35 U	0.42 U	0.43 U	0.44 U	0.47 J	0.34 J
CADMIUM	0.19 J	0.57 J	0.24 J	0.19 U	0.28 U	0.21 U	0.22 U	0.245 U	0.27 U	0.27 U	0.25 U
CALCIUM	146 J	2150 J	408 J	192 U	528 J	601 J	1130 J	1435 J	1740 J	1540 J	586 J
CHROMIUM	6.7 J	8.0 J	10.9 J	10.0 J	14.5 J	13.5 J	11.4 J	13.05 J	14.7 J	20.0 J	21.8 J
COBALT	0.89 J	1.6 J	1.8 J	1.5 J	6.7 J	7.1 J	7.9 J	7.55 J	7.2 J	4.4 J	4.0 J
COPPER	5.4 J	12.4 J	15.5 J	5.5 J	13.7 J	8.7 J	17.2 J	14.85 J	12.5 J	11.5 J	7.0 J
IRON	8650 J	9870 J	13300 J	12800 J	23900 J	17900 J	13600 J	17850 J	22100 J	20800 J	30300 J
LEAD	12.9 J	30.0 J	34.0 J	6.9 J	11.6 J	14.1 J	12.3 J	12.45 J	12.6 J	9.7 J	8.6 J
LITHIUM	3.4 J	3.7 J	4.6 J	4.3 J	9.7 J	7.9 J	7.3 J	8.5 J	9.7 J	13.5 J	8.4 J
MAGNESIUM	495 J	630 J	710 J	593 J	2000 J	1100 J	1010 J	1280 J	1550 J	2620 J	1290 J
MANGANESE	8.1 J	16.7 J	15.6 J	24.7 J	415 J	314 J	229 J	336 J	443 J	298 J	167 J
MERCURY	0.007 J	0.002 U	0.003 J	0.002 U	0.047 J	0.032 J	0.026 J	0.043 J	0.060 J	0.058 J	0.020 J
NICKEL	3.6 J	3.4 J	4.3 J	3.8 J	11.0 J	7.6 J	8.4 J	9.15 J	9.9 J	11.5 J	6.5 J
POTASSIUM	282 J	270 J	285 J	225 J	610 J	429 J	448 J	541.5 J	635 J	1550 J	810 J
SELENIUM	0.07 U	0.11 U	0.05 U	0.06 U	0.31 U	0.36 U	0.30 U	0.36 U	0.42 U	0.28 U	0.26 U
SILVER	0.05 U	0.42 J	0.08 U	0.02 U	0.05 U	0.05 U	0.07 U	0.05 U	0.03 U	0.04 U	0.03 U
SODIUM	20.8 U	19.3 U	27.1 U	27.9 U	44.2 U	19.9 U	38.2 U	38.4 U	38.6 U	69.4 U	62.0 U
STRONTIUM	7.8 J	15.9 J	16.6 J	4.0 J	8.2 J	7.3 J	9.4 J	12.55 J	15.7 J	17.1 J	8.0 J
TIN	0.31 J	0.35 J	0.46 J	0.30 U	0.66 U	0.49 U	0.50 U	0.545 U	0.59 U	0.55 U	0.49 U
TITANIUM	23.0 J	29.4 J	42.2 J	30.1 J	99.3 J	82.0 J	70.3 J	96.65 J	123 J	177 J	173 J
VANADIUM	9.5 J	11.2 J	14.5 J	12.1 J	24.3 J	20.1 J	17.7 J	21.4 J	25.1 J	33.9 J	32.4 J
ZINC	8.6 U	54.5 J	83.3 J	11.6 U	39.7 U	26.7 U	33.3 U	33.75 U	34.2 U	31.8 J	17.6 J
Miscellaneous Parameters											
CATION EXCHANGE CAPACITY (MEQ/100)										22	15
PH										7.5	5.3
TOTAL ORGANIC CARBON (MG/KG)										1400 J	3400 J

APPENDIX A
POSITIVE HITS TABLE
SUBSURFACE SOIL - ROUNDS 1 AND 2
SWMU 16 - B146 CAST HIGH EXPLOSIVES INCINERATOR
NSWC CRANE, INDIANA

LOCATION	16SB47	16SB48	16SB49	16SB50	16SB50	16SB50
NSAMPLE	16SB470405	16SB480203	16SB490405	16SB500103	16SB500103-AVG	16SB500103-D
SAMPLE	16SB470405	16SB480203	16SB490405	16SB500103	16SB500103-AVG	16FD12050301
MATRIX	SB	SB	SB	SB	SB	SB
DEPTH RANGE	4 - 5	2 - 3	4 - 5	1 - 3	1 - 3	1 - 3
SAMPLE DATE	12/5/2003	12/5/2003	12/5/2003	12/5/2003	12/5/2003	12/5/2003
VALIDATED	Y	Y	Y	Y	Y	Y
COLLECTION METHOD	GRAB	GRAB	GRAB	GRAB	GRAB	GRAB
Volatile Organics (ug/kg)						
ACETONE	1.18 UJ	1.12 UJ	6 J	0.978 UJ	1.009 UJ	1.04 UJ
CIS-1,2-DICHLOROETHENE	22	1.12 U	0.814 U	0.978 U	1.009 UJ	1.04 UJ
DICHLORODIFLUOROMETHANE	170	130 J	79 J	110	110 J	110 J
TOTAL XYLENES	2 J	2 J	2 J	1 J	1.5 J	2 J
TRANS-1,2-DICHLOROETHENE	1.18 U	1.12 U	0.814 U	1 J	1 J	1.04 UJ
TRICHLOROETHENE	61	97 J	37	190 J	175 J	160
TRICHLOROFLUOROMETHANE	1.18 U	1.12 U	0.814 U	0.978 U	1.009 UJ	1.04 UJ
Semivolatile Organics (ug/kg)						
2-METHYLNAPHTHALENE						
ANTHRACENE						
BENZO(A)ANTHRACENE						
BENZO(A)PYRENE						
BENZO(B)FLUORANTHENE						
BENZO(G,H,I)PERYLENE						
BENZO(K)FLUORANTHENE						
BIS(2-ETHYLHEXYL)PHTHALATE						
CHRYSENE						
DIBENZO(A,H)ANTHRACENE						
FLUORANTHENE						
FLUORENE						
INDENO(1,2,3-CD)PYRENE						
ISOSAFROLE						
NAPHTHALENE						
PHENANTHRENE						
PYRENE						
SAFROLE						
Herbicides (ug/kg)						
HEXACHLOROPHENE						
PENTACHLOROPHENOL						
Inorganics (mg/kg)						
ALUMINUM						

APPENDIX A
POSITIVE HITS TABLE
SUBSURFACE SOIL - ROUNDS 1 AND 2
SWMU 16 - B146 CAST HIGH EXPLOSIVES INCINERATOR
NSWC CRANE, INDIANA

LOCATION	16SB47	16SB48	16SB49	16SB50	16SB50	16SB50
NSAMPLE	16SB470405	16SB480203	16SB490405	16SB500103	16SB500103-AVG	16SB500103-D
SAMPLE	16SB470405	16SB480203	16SB490405	16SB500103	16SB500103-AVG	16FD12050301
MATRIX	SB	SB	SB	SB	SB	SB
DEPTH RANGE	4 - 5	2 - 3	4 - 5	1 - 3	1 - 3	1 - 3
SAMPLE DATE	12/5/2003	12/5/2003	12/5/2003	12/5/2003	12/5/2003	12/5/2003
VALIDATED	Y	Y	Y	Y	Y	Y
COLLECTION METHOD	GRAB	GRAB	GRAB	GRAB	GRAB	GRAB
ANTIMONY						
ARSENIC						
BARIUM						
BERYLLIUM						
CADMIUM						
CALCIUM						
CHROMIUM						
COBALT						
COPPER						
IRON						
LEAD						
LITHIUM						
MAGNESIUM						
MANGANESE						
MERCURY						
NICKEL						
POTASSIUM						
SELENIUM						
SILVER						
SODIUM						
STRONTIUM						
TIN						
TITANIUM						
VANADIUM						
ZINC						
Miscellaneous Parameters						
CATION EXCHANGE CAPACITY (MEQ/100)						
PH						
TOTAL ORGANIC CARBON (MG/KG)						

SWMU 16
SEDIMENT

APPENDIX A
POSITIVE HITS TABLE
SEDIMENT - ROUNDS 1 AND 2
SWMU 16 - B146 CAST HIGH EXPLOSIVES INCINERATOR
NSWC CRANE, INDIANA

LOCATION	16SD02	16SD03	16SD04	16SD05	16SD06	16SD06	16SD06	16SD08	16SD09	16SD10	16SD11	16SD11	16SD11	16SW/SD12	16SW/SD13
NSAMPLE	16SD020004	16SD030004	16SD040004	16SD050004	16SD060004	16SD060004-AVG	16SD060004-D	16SD080004	16SD090004	16SD100004	16SD110004	16SD110004-AVG	16SD110004-D	16SD120004	16SD130004
SAMPLE	16SD020004	16SD030004	16SD040004	16SD050004	16SD060004	16SD060004-AVG	FD04010302	16SD080004	16SD090004	16SD100004	16SD110004	16SD110004-AVG	FD04010301	16SD120004	16SD130004
MATRIX	SD	SD	SD	SD	SD	SD	SD	SD	SD	SD	SD	SD	SD	SD	SD
DEPTH RANGE	0 - 0.3	0 - 0.3	0 - 0.3	0 - 0.3	0 - 0.3	0 - 0.3	0 - 0.3	0 - 0.3	0 - 0.3	0 - 0.3	0 - 0.3	0 - 0.3	0 - 0.3	0 - 0.3	0 - 0.3
SAMPLE DATE	4/1/2003	4/1/2003	4/1/2003	4/1/2003	4/1/2003	4/1/2003	4/1/2003	4/1/2003	4/1/2003	4/1/2003	4/1/2003	4/1/2003	4/1/2003	10/25/2003	10/25/2003
VALIDATED	Y	Y	Y	Y	Y	Y	Y	Y	Y	Y	Y	Y	Y	Y	Y
COLLECTION METHOD	GRAB	GRAB	GRAB	GRAB	GRAB	GRAB	GRAB	GRAB	GRAB	GRAB	GRAB	GRAB	GRAB	GRAB	GRAB
Volatile Organics (ug/kg)															
ACETONE														11 J	6 J
CIS-1,2-DICHLOROETHENE														3 J	1.2 U
DICHLORODIFLUOROMETHANE														1.4 U	1.2 U
TRICHLOROETHENE														2 J	1.2 U
Semivolatile Organics (ug/kg)															
2-METHYLNAPHTHALENE	4.4 U	5 J	4.3 U	4 U	4.1 U	4.15 U	4.2 U	4.4 U	4.3 U	4.3 U	5.8 U	4.45 J	6 J		
ACENAPHTHENE	4.4 U	3.9 U	4.3 U	8 J	4.1 U	4.15 U	4.2 U	4.4 U	4.3 U	4.3 U	5.8 U	5.85 U	5.9 U		
ACENAPHTHYLENE	4.4 U	8	5 J	4 J	4.1 U	4.15 U	4.2 U	4.4 U	4.3 U	4.3 U	5.8 U	4.45 J	6 J		
ANTHRACENE	4.4 U	3.9 U	5 J	15	4.1 U	4.15 U	4.2 U	4.4 U	4.3 U	5 J	6 J	7.5 J	9 J		
BENZO(A)ANTHRACENE	6 J	13 J	7 J	66	5 J	5 J	5 J	4.4 UJ	4.3 U	15	31 J	41.5 J	52 J		
BENZO(A)PYRENE	8 J	3.9 UJ	12	84	7 J	7 J	7 J	4.4 UJ	4.3 U	21	43 J	56 J	69 J		
BENZO(B)FLUORANTHENE	20	3.9 UJ	32	120	10	9.5	9	4.4 UJ	6 J	30	57 J	72 J	87 J		
BENZO(G,H,I)PERYLENE	11	62 J	33	65	5 J	6 J	7 J	4.4 UJ	4.3 U	29	63 J	86.5 J	110 J		
BENZO(K)FLUORANTHENE	9	3.9 UJ	8 J	65	7 J	6 J	5 J	4.4 UJ	4.3 U	18	28 J	43.5 J	59 J		
CHRYSENE	19	60 J	18	100	12	9.5 J	7 J	4.4 UJ	5 J	31	52	63 J	74 J		
DI-N-BUTYL PHTHALATE	89 U	79 U	86 U	82 U	84 U	84.5 U	85 U	130 J	87 U	87 U	120 U	120 U	120 U		
DIBENZO(A,H)ANTHRACENE	4.4 U	3.9 UJ	4.3 U	18	4.1 U	4.15 U	4.2 U	4.4 UJ	4.3 U	4.3 U	5.8 UJ	5.85 UJ	5.9 UJ		
DIPHENYLAMINE	89 U	170 J	86 U	82 U	84 UJ	251 J	460 J	90 U	140 J	87 U	120 U	120 U	120 U		
FLUORANTHENE	25	22	12	160	11	9.5 J	8 J	5 J	6 J	30	55	70	85		
FLUORENE	4.4 U	3.9 U	4.3 U	8 J	4.1 U	4.15 U	4.2 U	4.4 U	4.3 U	4.3 U	5.8 U	5.85 U	5.9 U		
INDENO(1,2,3-CD)PYRENE	7 J	43 J	24	55	4.1 U	4.025 J	6 J	4.4 UJ	4.3 U	19	38 J	55.5 J	73 J		
NAPHTHALENE	4.4 U	6 J	4.3 U	5 J	4.1 U	4.15 U	4.2 U	4.4 U	4.3 U	4.3 U	5.8 U	5.85 U	5.9 U		
PHENANTHRENE	14	14	8 J	100	6 J	6 J	6 J	4 J	4.3 U	18	30	36	42		
PYRENE	20	44 J	17	170	13	11.5	10	9 J	6 J	39	88	109 J	130 J		
Herbicides (ug/kg)															
PENTACHLOROPHENOL	0.6 U	2.9 J	7.6	0.55 U	0.56 U	0.565 U	0.57 U	0.6 U	2.6 J	9.4 J	19 J	21.5 J	24 J		
Explosives (mg/kg)															
2,6-DINITROTOLUENE	0.25 U	0.25 U	0.25 U	0.25 U	0.25 U	0.25 U	0.25 U	0.25 U	0.25 U	0.25 U	0.25 U	0.25 U	0.25 U	0.54 J	0.25 U
RDX	0.25 U	0.27 J	0.25 U	0.25 U	0.25 U	0.25 U	0.25 U	0.25 U	0.25 U	0.25 U	0.25 U	0.25 U	0.25 U	0.25 U	0.25 U
Inorganics (mg/kg)															
ALUMINUM	11800	6060 J	12900 J	6620 J	5560	6255	6950	8190 J	9830	6940 J	10300 J	9975 J	9650 J	9490 J	11200 J
ANTIMONY	7.8 J	69.6 J	42.0 J	35.3 J	174 J	89.4 J	4.8 J	4.3 J	15.1 J	25.5 J	8.1 J	7.85 J	7.6 J	2.7 J	4.1 J
ARSENIC	11.2 J	3.4 J	8.7 J	6.6 J	3.9 J	3.25 J	2.6 J	8.8 J	9.8 J	14.1 J	10.3 J	9.35 J	8.4 J	9.8 J	29.8 J
BARIUM	1240 J	2820 J	231 J	1460 J	1680 J	1018.5 J	357 J	143 J	572 J	257 J	171 J	261 J	351 J	107 J	137 J
BERYLLIUM	0.63 J	0.39 U	0.56 J	0.43 J	0.52 J	0.3625 J	0.41 U	0.59 J	0.56 J	0.88 J	0.80 J	0.72 J	0.64 J	1.1 J	2.3 J
CADMIUM	4.8 J	18.1 J	7.1 J	18.1 J	19.5 J	12 J	4.5 J	0.80 J	11.1 J	6.8 J	3.0 J	3.2 J	3.4 J	0.81 J	1.9 J
CALCIUM	2980 J	54200 J	2450 J	59800 J	28600 J	17680 J	6760 J	1520 J	4240 J	1480 J	7740 J	8745 J	9750 J	891 J	616 J
CHROMIUM	20.5 J	15.4 J	19.6 J	24.7 J	23.8 J	18.35 J	12.9 J	13.3 J	19.6 J	68.5 J	27.0 J	22.35 J	17.7 J	19.8 J	80.9 J
COBALT	12.4 J	3.4 J	11.2 J	9.3 J	6.3 J	5.3 J	4.3 J	12.8 J	11.6 J	14.0 J	10.2 J	11.65 J	13.1 J	41.2 J	39.9 J
COPPER	172 J	1980 J	68.7 J	1790 J	2570 J	1422 J	274 J	85.3 J	332 J	250 J	266 J	274 J	282 J	20.1 J	28.5 J
IRON	30600 J	21000 J	25500 J	25800 J	30500 J	25700 J	20900 J	18200 J	25700 J	65100 J	28500 J	24700 J	20900 J	43300 J	126000 J

APPENDIX A
POSITIVE HITS TABLE
SEDIMENT - ROUNDS 1 AND 2
SWMU 16 - B146 CAST HIGH EXPLOSIVES INCINERATOR
NSWC CRANE, INDIANA

LOCATION	16SD02	16SD03	16SD04	16SD05	16SD06	16SD06	16SD06	16SD08	16SD09	16SD10	16SD11	16SD11	16SD11	16SW/SD12	16SW/SD13
NSAMPLE	16SD020004	16SD030004	16SD040004	16SD050004	16SD060004	16SD060004-AVG	16SD060004-D	16SD080004	16SD090004	16SD100004	16SD110004	16SD110004-AVG	16SD110004-D	16SD120004	16SD130004
SAMPLE	16SD020004	16SD030004	16SD040004	16SD050004	16SD060004	16SD060004-AVG	FD04010302	16SD080004	16SD090004	16SD100004	16SD110004	16SD110004-AVG	FD04010301	16SD120004	16SD130004
MATRIX	SD	SD	SD	SD	SD	SD	SD	SD	SD	SD	SD	SD	SD	SD	SD
DEPTH RANGE	0 - 0.3	0 - 0.3	0 - 0.3	0 - 0.3	0 - 0.3	0 - 0.3	0 - 0.3	0 - 0.3	0 - 0.3	0 - 0.3	0 - 0.3	0 - 0.3	0 - 0.3	0 - 0.3	0 - 0.3
SAMPLE DATE	4/1/2003	4/1/2003	4/1/2003	4/1/2003	4/1/2003	4/1/2003	4/1/2003	4/1/2003	4/1/2003	4/1/2003	4/1/2003	4/1/2003	4/1/2003	10/25/2003	10/25/2003
VALIDATED	Y	Y	Y	Y	Y	Y	Y	Y	Y	Y	Y	Y	Y	Y	Y
COLLECTION METHOD	GRAB	GRAB	GRAB	GRAB	GRAB	GRAB	GRAB	GRAB	GRAB	GRAB	GRAB	GRAB	GRAB	GRAB	GRAB
LEAD	770 J	4990 J	229 J	3570 J	15200 J	8855 J	2510 J	336 J	1480 J	1010 J	1120 J	1055.5 J	991 J	81.4 J	145 J
LITHIUM	8.8 J	2.9 J	10.4 J	4.7 J	4.1 J	4.6 J	5.1 J	7.2 J	8.1 J	4.5 J	8.1 J	8.25 J	8.4 J		
MAGNESIUM	1620 J	4820 J	2100 J	6080 J	2220 J	1770 J	1320 J	1310 J	1540 J	677 J	1700 J	1785 J	1870 J	705 J	470 J
MANGANESE	893 J	175 J	300 J	790 J	376 J	219.95 J	63.9 J	966 J	596 J	918 J	976 J	1303 J	1630 J	1460 J	2410 J
MERCURY	0.17 J	2.7 J	0.35 J	0.18 J	0.22 J	0.113 J	0.006 J	0.080 J	0.10 J	1.1 J	0.25 J	0.255 J	0.26 J	0.036 J	0.037 J
NICKEL	13.5 J	12.5 J	13.2 J	17.6 J	16.5 J	12.65 J	8.8 J	10.6 J	12.1 J	12.1 J	22.5 J	22.55 J	22.6 J	43 J	58 J
POTASSIUM	606 J	282 J	645 J	350 J	438 J	509.5 J	581 J	492 J	605 J	328 J	589 J	630.5 J	672 J	866 J	704 J
SELENIUM	0.55 J	0.17 U	0.46 J	0.33 J	0.14 U	0.13 U	0.12 U	0.50 J	0.47 J	0.39 J	0.90 J	0.94 J	0.98 J	0.57 J	1.5 J
SODIUM	40.2 U	43.8 U	23.6 U	34.4 U	20.6 U	19.55 U	18.5 U	44.0 U	16.3 U	11.7 U	160 J	181.5 J	203 J	34.1 U	34.9 J
STRONTIUM	51.0 J	2740 J	109 J	791 J	886 J	541 J	196 J	62.2 J	227 J	57.8 J	58.0 J	68.5 J	79.0 J		
THALLIUM	0.14 U	0.06 U	0.19 U	0.09 U	0.09 U	0.12 U	0.15 U	0.16 U	0.14 U	0.09 U	0.16 U	0.225 U	0.29 U	0.14 U	0.16 U
TIN	2.2 J	12.3 J	3.2 J	12.5 J	19.0 J	10.05 J	1.1 J	1.1 J	2.4 J	2.8 J	5.3 J	4.8 J	4.3 J	0.4 J	0.31 U
TITANIUM	82.5 J	35.7 J	156 J	64.3 J	9.4 J	15 J	20.6 J	112 J	60.7 J	95.3 J	100 J	101.5 J	103 J	43.8 J	61.2 J
VANADIUM	34.9 J	12.8 J	35.8 J	21.0 J	17.1 J	16.6 J	16.1 J	25.0 J	29.5 J	48.9 J	40.3 J	37.8 J	35.3 J	24.6 J	71.7 J
ZINC	1700 J	23400 J	952 J	14300 J	7700 J	4263 J	826 J	573 J	1570 J	2330 J	2680 J	2465 J	2250 J	243 J	514 J
AVS/SEM (umo/g)															
ACID VOLATILE SULFIDE	0.53				0.56	0.55	0.54		0.59						
CADMIUM	0.024 J				0.145 J	0.1145 J	0.084 J		0.075 J						
COPPER	1.83				18.3	17.85	17.4		4.98						
LEAD	2.6				16.3	15.45	14.6		4.14						
MERCURY	0.00011				0.00014	0.000115	0.00009		0.00015						
NICKEL	0.028				0.068	0.0655	0.063		0.035						
SEM/AVS	51				220	205	190		50						
ZINC	22.4 J				91 J	81.8 J	72.6 J		20.6 J						
Miscellaneous Parameters															
CATION EXCHANGE CAPACITY (MEQ/100)	25 J				5.7 J	11.35 J	17 J		18 J						
PH	7.4				8	8	8		7.8						
TOTAL ORGANIC CARBON (MG/KG)	8600				1600	1050	1000 U		3900						

APPENDIX A
POSITIVE HITS TABLE
SEDIMENT - ROUNDS 1 AND 2
SWMU 16 - B146 CAST HIGH EXPLOSIVES INCINERATOR
NSWC CRANE, INDIANA

LOCATION	16SW/SD13	16SW/SD13	16SW/SD14	16SW/SD15	16SW/SD16	16SW/SD17	16SW/SD17	16SW/SD17	16SW/SD18	16SW/SD19	16SW/SD20	16SW/SD21	16SW/SD22
NSAMPLE	16SD130004-AVG	16SD130004-D	16SD140004	16SD150004	16SD160004	16SD170004	16SD170004-AVG	16SD170004-D	16SD180004	16SD190004	16SD200004	16SD210004	16SD220004
SAMPLE	16SD130004-AVG	16FD10250301	16SD140004	16SD150004	16SD160004	16SD170004	16SD170004-AVG	16FD10240302	16SD180004	16SD190004	16SD200004	16SD210004	16SD220004
MATRIX	SD	SD	SD	SD	SD	SD	SD	SD	SD	SD	SD	SD	SD
DEPTH RANGE	0 - 0.3	0 - 0.3	0 - 0.3	0 - 0.3	0 - 0.3	0 - 0.3	0 - 0.3	0 - 0.3	0 - 0.3	0 - 0.3	0 - 0.3	0 - 0.3.	0 - 0.3
SAMPLE DATE	10/25/2003	10/25/2003	10/24/2003	10/24/2003	10/24/2003	10/24/2003	10/24/2003	10/24/2003	10/24/2003	10/24/2003	10/25/2003	10/24/2003	10/24/2003
VALIDATED	Y	Y	Y	Y	Y	Y	Y	Y	Y	Y	Y	Y	Y
COLLECTION METHOD	GRAB	GRAB	GRAB	GRAB	GRAB	GRAB	GRAB	GRAB	GRAB	GRAB	GRAB	GRAB	GRAB
Volatile Organics (ug/kg)													
ACETONE	3.325 J	1.3 U	7 J	7 J	3 J	1.3 U	2.825 J	5 J	1.2 U	7 J	5 J	1.1 UJ	69 J
CIS-1,2-DICHLOROETHENE	1.25 U	1.3 U	1.2 U	1.2 U	1.3 U	1.3 U	1.25 U	1.2 U	1.2 U	1 U	1.2 U	1.1 U	1.58 U
DICHLORODIFLUOROMETHANE	1.25 U	1.3 U	1.2 U	1.2 U	1.3 U	1.3 UJ	1.25 UJ	1.2 U	1.2 U	22	1.2 U	1.1 U	1.58 U
TRICHLOROETHENE	1.25 U	1.3 U	1.2 U	1.2 U	1.3 U	1.3 U	1.25 U	1.2 U	1.2 U	1 U	1.2 U	1.1 U	1.58 U
Semivolatile Organics (ug/kg)													
2-METHYLNAPHTHALENE													4.6 U
ACENAPHTHENE													4.6 U
ACENAPHTHYLENE													4.6 U
ANTHRACENE													4.6 U
BENZO(A)ANTHRACENE													5 J
BENZO(A)PYRENE													4.6 U
BENZO(B)FLUORANTHENE													4.6 U
BENZO(G,H,I)PERYLENE													4.6 U
BENZO(K)FLUORANTHENE													4.6 U
CHRYSENE													4.6 U
DI-N-BUTYL PHTHALATE													
DIBENZO(A,H)ANTHRACENE													4.6 U
DIPHENYLAMINE													
FLUORANTHENE													4.6 U
FLUORENE													4.6 U
INDENO(1,2,3-CD)PYRENE													4.6 U
NAPHTHALENE													4.6 U
PHENANTHRENE													4.6 U
PYRENE													4.6 U
Herbicides (ug/kg)													
PENTACHLOROPHENOL													
Explosives (mg/kg)													
2,6-DINITROTOLUENE	0.25 U	0.25 U	0.25 U	0.92 J	0.25 U	0.25 U	0.25 U	0.25 U	0.25 U	0.25 U	0.25 U	0.25 U	
RDX	0.25 U	0.25 U	0.25 U	0.25 U	0.25 U	0.25 U	0.25 U	0.25 U	0.25 U	0.25 U	0.25 U	0.25 U	
Inorganics (mg/kg)													
ALUMINUM	11000 J	10800 J	8930 J	13700 J	12700 J	11200 J	11000 J	10800 J	8090 J	8730 J	8710 J	12800 J	
ANTIMONY	3.65 J	3.2 J	1.7 J	0.65 J	9.5 J	1 J	0.855 J	0.71 J	1.2 J	1.1 J	1.4 J	1.3 J	
ARSENIC	32.2 J	34.6 J	27.5 J	18.7 J	9.5 J	17.4 J	31.9 J	46.4 J	34.8 J	30.8 J	24.4 J	25.9 J	
BARIUM	114.6 J	92.2 J	84.5 J	76.6 J	198 J	113 J	114 J	115 J	62.5 J	110 J	454 J	127 J	
BERYLLIUM	2.25 J	2.2 J	1.6 J	1.8 J	1.1 J	1.5 J	1.65 J	1.8 J	2.6 J	2.4 J	3 J	1.9 J	
CADMIUM	1.65 J	1.4 J	0.38 J	0.47 J	3 J	0.53 J	0.615 J	0.7 J	0.54 J	0.79 J	0.62 J	0.45 J	
CALCIUM	555.5 J	495 J	846 J	779 J	1120 J	1980 J	1448 J	916 J	362 J	973 J	539 J	805 J	
CHROMIUM	70.65 J	60.4 J	36.9 J	57.2 J	22.7 J	38.3 J	41.5 J	44.7 J	78.5 J	71.8 J	85 J	48 J	
COBALT	40.3 J	40.7 J	38.7 J	17.8 J	20.2 J	21.2 J	22.7 J	24.2 J	21.4 J	26.9 J	29.7 J	38.2 J	
COPPER	29.2 J	29.9 J	14.8 J	13.1 J	121 J	13.4 J	14.65 J	15.9 J	12.6 J	13.5 J	14.9 J	15 J	
IRON	125500 J	125000 J	74000 J	87700 J	29800 J	58500 J	69950 J	81400 J	124000 J	122000 J	141000 J	80800 J	

APPENDIX A
POSITIVE HITS TABLE
SEDIMENT - ROUNDS 1 AND 2
SWMU 16 - B146 CAST HIGH EXPLOSIVES INCINERATOR
NSWC CRANE, INDIANA

LOCATION	16SW/SD13	16SW/SD13	16SW/SD14	16SW/SD15	16SW/SD16	16SW/SD17	16SW/SD17	16SW/SD17	16SW/SD18	16SW/SD19	16SW/SD20	16SW/SD21	16SW/SD22
NSAMPLE	16SD130004-AVG	16SD130004-D	16SD140004	16SD150004	16SD160004	16SD170004	16SD170004-AVG	16SD170004-D	16SD180004	16SD190004	16SD200004	16SD210004	16SD220004
SAMPLE	16SD130004-AVG	16FD10250301	16SD140004	16SD150004	16SD160004	16SD170004	16SD170004-AVG	16FD10240302	16SD180004	16SD190004	16SD200004	16SD210004	16SD220004
MATRIX	SD	SD	SD	SD	SD	SD	SD	SD	SD	SD	SD	SD	SD
DEPTH RANGE	0 - 0.3	0 - 0.3	0 - 0.3	0 - 0.3	0 - 0.3	0 - 0.3	0 - 0.3	0 - 0.3	0 - 0.3	0 - 0.3	0 - 0.3	0 - 0.3	0 - 0.3
SAMPLE DATE	10/25/2003	10/25/2003	10/24/2003	10/24/2003	10/24/2003	10/24/2003	10/24/2003	10/24/2003	10/24/2003	10/24/2003	10/25/2003	10/24/2003	10/24/2003
VALIDATED	Y	Y	Y	Y	Y	Y	Y	Y	Y	Y	Y	Y	Y
COLLECTION METHOD	GRAB	GRAB	GRAB	GRAB	GRAB	GRAB	GRAB	GRAB	GRAB	GRAB	GRAB	GRAB	GRAB
LEAD	141 J	137 J	29.6 J	19.7 J	371 J	34.1 J	42.2 J	50.3 J	28.1 J	27.1 J	73.2 J	39.6 J	
LITHIUM													
MAGNESIUM	432.5 J	395 J	491 J	748 J	838 J	839 J	841.5 J	844 J	292 J	400 J	646 J	916 J	
MANGANESE	2260 J	2110 J	2270 J	834 J	2140 J	1650 J	1525 J	1400 J	1370 J	1900 J	3650 J	2670 J	
MERCURY	0.0425 J	0.048 J	0.026 J	0.034 J	0.93	0.037 J	0.0345 J	0.032 J	0.025 J	0.022 J	0.043 J	0.034 J	
NICKEL	59.4 J	60.8 J	39.2 J	34.4 J	21 J	27.1 J	33.65 J	40.2 J	43 J	43.4 J	34.5 J	36.4 J	
POTASSIUM	721.5 J	739 J	739 J	1030 J	1120 J	1130 J	1037.5 J	945 J	438 J	462 J	757 J	1120 J	
SELENIUM	1.5 J	1.5 J	0.99 J	0.53 J	0.47 J	0.59 J	0.615 J	0.64 J	0.5 J	0.72 J	0.7 J	1.2 J	
SODIUM	22.475 J	20.1 U	43.9 J	33.8 J	26.5 U	25.9 U	28.3 U	30.7 U	15.2 U	9.8 U	26.7 U	40.3 J	
STRONTIUM													
THALLIUM	0.13 U	0.1 U	0.26 U	0.17 U	0.21 U	0.14 U	0.12 U	0.1 U	0.08 U	0.1 U	0.48 J	0.19 U	
TIN	0.285 U	0.26 U	0.17 U	0.31 U	1.8 U	0.59 U	0.4 U	0.21 U	0.31 U	0.24 U	0.26 U	0.25 U	
TITANIUM	51.55 J	41.9 J	54.3 J	77.6 J	61.7 J	73.4 J	52.6 J	31.8 J	56.4 J	50.6 J	39.5 J	44 J	
VANADIUM	66.25 J	60.8 J	43.7 J	47.6 J	28.3 J	36.1 J	39.2 J	42.3 J	56.3 J	50.2 J	46.3 J	52.4 J	
ZINC	508 J	502 J	124 J	74.9 J	844 J	79.9 J	145.95 J	212 J	92.5 J	206 J	131 J	109 J	
AVS/SEM (umo/g)													
ACID VOLATILE SULFIDE													
CADMIUM													
COPPER													
LEAD													
MERCURY													
NICKEL													
SEM/AVS													
ZINC													
Miscellaneous Parameters													
CATION EXCHANGE CAPACITY (MEQ/100)													
PH													
TOTAL ORGANIC CARBON (MG/KG)													

SWMU 16
SURFACE WATER

APPENDIX A
POSITIVE HITS TABLE
SURFACE WATER - ROUNDS 1 AND 2
SWMU 16 - B146 CAST HIGH EXPLOSIVES INCINERATOR
NSWC CRANE, INDIANA

LOCATION	16SW01	16SW01	16SW01	16SW02	16SW02	16SW02	16SW02	16SW02	16SW07	16SW07	16SW07	16SW07	16SW07
NSAMPLE	16SW0101	16SW0101-F	16SW0102	16SW0201	16SW0201-F	16SW0202	16SW0202-AVG	16SW0202-D	16SW0701	16SW0701-AVG	16SW0701-D	16SW0701-F	16SW0701-F-AVG
SAMPLE	16SW0101	16SW0101F	16SW0102	16SW0201	16SW0201F	16SW0202	16SW0202-AVG	16FD12060301	16SW0701	16SW0701-AVG	FD04100301	16SW0701F	16SW0701-F-AVG
MATRIX	SW	SF	SW	SW	SF	SW	SW	SW	SW	SW	SW	SF	SF
DEPTH RANGE	---	---	---	---	---	---	---	---	---	---	---	---	---
SAMPLE DATE	4/1/2003	4/1/2003	12/6/2003	4/10/2003	4/10/2003	12/6/2003	12/6/2003	12/6/2003	4/10/2003	4/10/2003	4/10/2003	4/10/2003	4/10/2003
VALIDATED	Y	Y	Y	Y	Y	Y	Y	Y	Y	Y	Y	Y	Y
COLLECTION METHOD	GRAB	GRAB	GRAB	GRAB	GRAB	GRAB	GRAB	GRAB	GRAB	GRAB	GRAB	GRAB	GRAB
Volatile Organics (ug/L)													
ACETONE			0.5 UJ			0.5 UJ	0.5 UJ	0.5 UJ					
CHLOROFORM			0.3 U			2.4	2.45	2.5					
CIS-1,2-DICHLOROETHENE			0.3 U			7.1	7.25	7.4					
TRICHLOROETHENE			3.3			8.8	9	9.2					
VINYL CHLORIDE			0.3 U			0.3 U	0.425 J	0.7 J					
Semivolatile Organics (ug/L)													
2-METHYLNAPHTHALENE	0.67 J			0.05 U					0.05 U	0.05 U	0.05 U		
ACENAPHTHENE	0.9 J			0.05 UJ					0.05 UJ	0.05 UJ	0.05 UJ		
ANTHRACENE	0.31 J			0.05 U					0.05 U	0.05 U	0.05 U		
BENZO(A)ANTHRACENE	0.31 J			0.05 U					0.05 U	0.05 U	0.05 U		
BIS(2-ETHYLHEXYL)PHTHALATE	86 BJ			2 BU					3 BU	2 BU	2 BU		
CHRYSENE	0.78 J			0.05 U					0.05 U	0.05 U	0.05 U		
FLUORANTHENE	1.09 J			0.05 U					0.05 U	0.05 U	0.05 U		
FLUORENE	0.59 J			0.05 U					0.05 U	0.05 U	0.05 U		
NAPHTHALENE	1.3 J			0.05 U					0.05 U	0.05 U	0.05 U		
PHENANTHRENE	1.26 J			0.05 U					0.05 U	0.05 U	0.05 U		
PYRENE	2.34 J			0.05 U					0.05 U	0.05 U	0.05 U		
Herbicides (ug/L)													
HEXACHLOROPHENE	0.082 J			0.025 U					0.025 U	0.025 U	0.025 U		
PENTACHLOROPHENOL	0.19 J			0.02 J					0.015 R	0.016 J	0.016 J		
Explosives (ug/L)													
2,4,6-TRINITROTOLUENE	0.455 U			0.8 U					2.1	2.1	2.1		
2-AMINO-4,6-DINITROTOLUENE	0.455 U			0.8 U					0.89 J	0.875 J	0.86 J		
4-AMINO-2,6-DINITROTOLUENE	0.455 U			0.8 U					2.2 J	2.2 J	2.2 J		
HMX	29000			1.5 J					0.55 U	0.485 U	0.42 U		
RDX	88000			9.2					2.9	2.9	2.9		
Total Inorganics (ug/L)													
ALUMINUM	7.6 U			82.4 U					298 J	263 J	228 J		
ANTIMONY	1.3 U			2.9 U					2.5 U	2.55 U	2.6 U		
ARSENIC	0.38 U			3.4 J					2.9 J	2.9 J	2.9 J		
BARIUM	66.3 J			91.0 J					73.4 J	73.15 J	72.9 J		
CADMIUM	0.05 U			0.40 U					0.16 U	0.195 U	0.23 U		
CALCIUM	30300 J			30400 J					37100 J	36800 J	36500 J		
CHROMIUM	0.25 U			3.4 J					2.0 J	1.9 J	1.8 J		
COBALT	0.78 U			0.05 U					0.76 U	0.755 U	0.75 U		
COPPER	2.0 J			17.2 J					10.7 J	10.85 J	11.0 J		

APPENDIX A
POSITIVE HITS TABLE
SURFACE WATER - ROUNDS 1 AND 2
SWMU 16 - B146 CAST HIGH EXPLOSIVES INCINERATOR
NSWC CRANE, INDIANA

LOCATION	16SW01	16SW01	16SW01	16SW02	16SW02	16SW02	16SW02	16SW02	16SW07	16SW07	16SW07	16SW07	16SW07
NSAMPLE	16SW0101	16SW0101-F	16SW0102	16SW0201	16SW0201-F	16SW0202	16SW0202-AVG	16SW0202-D	16SW0701	16SW0701-AVG	16SW0701-D	16SW0701-F	16SW0701-F-AVG
SAMPLE	16SW0101	16SW0101F	16SW0102	16SW0201	16SW0201F	16SW0202	16SW0202-AVG	16FD12060301	16SW0701	16SW0701-AVG	FD04100301	16SW0701F	16SW0701-F-AVG
MATRIX	SW	SF	SW	SW	SF	SW	SW	SW	SW	SW	SW	SF	SF
DEPTH RANGE	---	---	---	---	---	---	---	---	---	---	---	---	---
SAMPLE DATE	4/1/2003	4/1/2003	12/6/2003	4/10/2003	4/10/2003	12/6/2003	12/6/2003	12/6/2003	4/10/2003	4/10/2003	4/10/2003	4/10/2003	4/10/2003
VALIDATED	Y	Y	Y	Y	Y	Y	Y	Y	Y	Y	Y	Y	Y
COLLECTION METHOD	GRAB	GRAB	GRAB	GRAB	GRAB	GRAB	GRAB	GRAB	GRAB	GRAB	GRAB	GRAB	GRAB
IRON	60.5 J			77.1 U					194 U	180.5 U	167 U		
LEAD	0.15 U			13.1 J					4.6 J	4.6 J	4.6 J		
MAGNESIUM	5190 J			5700 J					6560 J	6550 J	6540 J		
MANGANESE	44.3 J			10.6 J					5.2 J	5.05 J	4.9 J		
MERCURY	2.0			0.020 U					0.020 U	0.02 U	0.020 U		
NICKEL	1.8 J			0.61 U					0.95 J	0.96 J	0.97 J		
POTASSIUM	1640 J			839 J					2430 J	2405 J	2380 J		
SODIUM	12400 J			29300 J					84800 J	84050 J	83300 J		
STRONTIUM	190 J			213 J					226 J	229.5 J	233 J		
TITANIUM	0.24 U			2.2 J					10.2 J	7.25 J	4.3 J		
VANADIUM	0.05 U			0.39 U					1.2 J	1.1 J	1.0 J		
ZINC	3.2 U			178 J					80.1 J	79.9 J	79.7 J		
Dissolved Inorganics (ug/L)													
ALUMINUM		575			22.3 U							49.4 U	44.9 U
ANTIMONY		2.1 U			2.8 U							2.5 U	2.225 J
ARSENIC		0.60 U			3.2 J							2.8 J	2.8 J
BARIUM		70.5 J			91.5 J							71.8 J	71.6 J
CADMIUM		3.3 J			0.40 U							0.15 U	0.28 U
CALCIUM		31000 J			29200 J							37700 J	37950 J
CHROMIUM		1.7 J			3.2 J							1.5 J	1.55 J
COBALT		0.28 U			0.15 U							0.71 U	0.705 U
COPPER		17.9 J			16.2 J							9.1 J	9.2 J
IRON		4100 J			36.6 U							42.3 U	42.4 U
LEAD		26.2 J			8.4 J							1.9 U	1.625 J
MAGNESIUM		5310 J			5620 J							6560 J	6545 J
MANGANESE		23.4 J			10.1 J							2.8 U	2.85 U
MERCURY		0.02 U			0.020 U							0.020 U	0.02 U
NICKEL		2.2 J			0.50 U							0.84 J	0.62 J
POTASSIUM		1940 J			842 J							2370 J	2365 J
SODIUM		12100 J			28200 J							87000 J	88000 J
STRONTIUM		196 J			207 J							234 J	235.5 J
TITANIUM		3.9 J			1.3 U							3.2 J	2.7 J
VANADIUM		0.76 U			0.29 U							0.69 U	0.675 U
ZINC		78.6 J			170 J							68.0 J	68.15 J
Miscellaneous Parameters (mg/L)													
AMMONIA-N	2.8 J			0.01 U					0.01 U	0.0125	0.02		
NITRITE/NITRATE-N	3.3 J			0.22					1.5	1.5	1.5		

APPENDIX A
POSITIVE HITS TABLE
SURFACE WATER - ROUNDS 1 AND 2
SWMU 16 - B146 CAST HIGH EXPLOSIVES INCINERATOR
NSWC CRANE, INDIANA

LOCATION	16SW01	16SW01	16SW01	16SW02	16SW02	16SW02	16SW02	16SW02	16SW07	16SW07	16SW07	16SW07	16SW07
NSAMPLE	16SW0101	16SW0101-F	16SW0102	16SW0201	16SW0201-F	16SW0202	16SW0202-AVG	16SW0202-D	16SW0701	16SW0701-AVG	16SW0701-D	16SW0701-F	16SW0701-F-AVG
SAMPLE	16SW0101	16SW0101F	16SW0102	16SW0201	16SW0201F	16SW0202	16SW0202-AVG	16FD12060301	16SW0701	16SW0701-AVG	FD04100301	16SW0701F	16SW0701-F-AVG
MATRIX	SW	SF	SW	SW	SF	SW	SW	SW	SW	SW	SW	SF	SF
DEPTH RANGE	---	---	---	---	---	---	---	---	---	---	---	---	---
SAMPLE DATE	4/1/2003	4/1/2003	12/6/2003	4/10/2003	4/10/2003	12/6/2003	12/6/2003	12/6/2003	4/10/2003	4/10/2003	4/10/2003	4/10/2003	4/10/2003
VALIDATED	Y	Y	Y	Y	Y	Y	Y	Y	Y	Y	Y	Y	Y
COLLECTION METHOD	GRAB	GRAB	GRAB	GRAB	GRAB	GRAB	GRAB	GRAB	GRAB	GRAB	GRAB	GRAB	GRAB
Field Parameter													
DISSOLVED OXYGEN - METER (MG/L)			12.65	10.51		10.69	10.69		10.63	10.63			
OXIDATION REDUCTION POTENTIAL (MV)			193.9	90.9		143.2	143.2		89.1	89.1			
PH			6.65	8.13		7.61	7.61		8.4	8.4			
SPECIFIC CONDUCTANCE (MS/CM)			0.305	0.281		0.224	0.224		0.591	0.591			
TEMPERATURE (C)			6.92	9.14		9.49	9.49		11.78	11.78			
TURBIDITY (NTU)			22	2.1		120	120		4.2	4.2			

APPENDIX A
POSITIVE HITS TABLE
SURFACE WATER - ROUNDS 1 AND 2
SWMU 16 - B146 CAST HIGH EXPLOSIVES INCINERATOR
NSWC CRANE, INDIANA

LOCATION	16SW07	16SW07	16SW/SD12	16SW/SD12	16SW/SD13	16SW/SD13	16SW/SD14	16SW/SD14	16SW/SD15	16SW/SD15	16SW/SD17	16SW/SD17	16SW/SD17
NSAMPLE	16SW0701-F-D	16SW0702	16SW1201	16SW1201-F	16SW1301	16SW1301-F	16SW1401	16SW1401-F	16SW1501	16SW1501-F	16SW1701	16SW1701-AVG	16SW1701-D
SAMPLE	FD04100301-F	16SW0702	16SW1201	16SW1201-F	16SW1301	16SW1301-F	16SW1401	16SW1401-F	16SW1501	16SW1501-F	16SW1701	16SW1701-AVG	16FD10240301
MATRIX	SF	SW	SW	SF	SW	SF	SW	SF	SW	SF	SW	SW	SW
DEPTH RANGE	---	---	---	---	---	---	---	---	---	---	---	---	---
SAMPLE DATE	4/10/2003	12/6/2003	10/25/2003	10/25/2003	10/25/2003	10/25/2003	10/24/2003	10/24/2003	10/25/2003	10/25/2003	10/24/2003	10/24/2003	10/24/2003
VALIDATED	Y	Y	Y	Y	Y	Y	Y	Y	Y	Y	Y	Y	Y
COLLECTION METHOD	GRAB	GRAB	GRAB	GRAB	GRAB	GRAB	GRAB	GRAB	GRAB	GRAB	GRAB	GRAB	GRAB
Volatile Organics (ug/L)													
ACETONE		0.5 UJ	0.5 UJ		0.5 UJ		0.5 UR		0.5 UJ		0.5 UR	0.5 UR	0.5 UR
CHLOROFORM		0.3 U	0.3 U		0.3 U		0.3 U		0.3 U		0.3 U	0.3 U	0.3 U
CIS-1,2-DICHLOROETHENE		2.9	1.4		0.3 U		0.3 U		0.3 U		0.3 U	0.3 U	0.3 U
TRICHLOROETHENE		6.6	15		0.3 U		0.3 U		0.3 U		0.3 U	0.3 U	0.3 U
VINYL CHLORIDE		0.3 U	0.3 U		0.3 U		0.3 U		0.3 U		0.3 U	0.3 U	0.3 U
Semivolatile Organics (ug/L)													
2-METHYLNAPHTHALENE													
ACENAPHTHENE													
ANTHRACENE													
BENZO(A)ANTHRACENE													
BIS(2-ETHYLHEXYL)PHTHALATE													
CHRYSENE													
FLUORANTHENE													
FLUORENE													
NAPHTHALENE													
PHENANTHRENE													
PYRENE													
Herbicides (ug/L)													
HEXACHLOROPHENE													
PENTACHLOROPHENOL													
Explosives (ug/L)													
2,4,6-TRINITROTOLUENE			0.25 U		0.25 U		0.25 U		0.25 U		0.25 U	0.25 U	0.25 U
2-AMINO-4,6-DINITROTOLUENE			0.25 U		0.25 U		0.25 U		0.25 U		0.25 U	0.25 U	0.25 U
4-AMINO-2,6-DINITROTOLUENE			0.25 U		0.25 U		0.25 U		0.25 U		0.25 U	0.25 U	0.25 U
HMX			0.27 J		0.25 U		0.25 U		0.51 J		0.25 U	0.25 U	0.25 U
RDX			0.25 U		0.25 U		0.25 U		0.29 J		0.25 U	0.25 U	0.25 U
Total Inorganics (ug/L)													
ALUMINUM			378 J		1130 J		87.6 U		9510 J		87.3 U	93.325 J	143 J
ANTIMONY			0.40 U		0.53 U		0.26 U		0.28 U		0.63 U	0.42 U	0.21 U
ARSENIC			0.16 U		0.35 U		0.25 U		3.8 J		0.52 U	0.34 U	0.16 U
BARIUM			53.0 J		86.0 J		57.3 J		150 J		69.4 J	69.95 J	70.5 J
CADMIUM			0.04 U		0.24 U		0.13 U		0.17 U		0.4 U	0.22 U	0.04 U
CALCIUM			19100 J		13900 J		38700 J		49500 J		19700 J	20000 J	20300 J
CHROMIUM			0.66 U		1.8 J		0.41 U		11.8 J		0.78 U	0.63 U	0.48 U
COBALT			0.86 J		2.0 J		0.15 U		4.6 J		0.48 U	0.325 U	0.17 U
COPPER			1.1 U		3.1 J		0.72 U		5.9 J		1.5 U	1.3 U	1.1 U

APPENDIX A
POSITIVE HITS TABLE
SURFACE WATER - ROUNDS 1 AND 2
SWMU 16 - B146 CAST HIGH EXPLOSIVES INCINERATOR
NSWC CRANE, INDIANA

LOCATION	16SW07	16SW07	16SW/SD12	16SW/SD12	16SW/SD13	16SW/SD13	16SW/SD14	16SW/SD14	16SW/SD15	16SW/SD15	16SW/SD17	16SW/SD17	16SW/SD17
NSAMPLE	16SW0701-F-D	16SW0702	16SW1201	16SW1201-F	16SW1301	16SW1301-F	16SW1401	16SW1401-F	16SW1501	16SW1501-F	16SW1701	16SW1701-AVG	16SW1701-D
SAMPLE	FD04100301-F	16SW0702	16SW1201	16SW1201-F	16SW1301	16SW1301-F	16SW1401	16SW1401-F	16SW1501	16SW1501-F	16SW1701	16SW1701-AVG	16FD10240301
MATRIX	SF	SW	SW	SF	SW	SF	SW	SF	SW	SF	SW	SW	SW
DEPTH RANGE	---	---	---	---	---	---	---	---	---	---	---	---	---
SAMPLE DATE	4/10/2003	12/6/2003	10/25/2003	10/25/2003	10/25/2003	10/25/2003	10/24/2003	10/24/2003	10/25/2003	10/25/2003	10/24/2003	10/24/2003	10/24/2003
VALIDATED	Y	Y	Y	Y	Y	Y	Y	Y	Y	Y	Y	Y	Y
COLLECTION METHOD	GRAB	GRAB	GRAB	GRAB	GRAB	GRAB	GRAB	GRAB	GRAB	GRAB	GRAB	GRAB	GRAB
IRON			278 J		817 J		47.7 U		9990 J		44.6 U	70.2 U	95.8 U
LEAD			0.51 U		5.2 J		0.26 U		4.8 J		0.55 U	0.425 U	0.3 U
MAGNESIUM			8200 J		7340 J		7810 J		9450 J		6100 J	6215 J	6330 J
MANGANESE			209 J		282 J		9.1 U		443 J		10 U	10.9 J	16.8 J
MERCURY			0.02 U		0.02 U		0.02 U		0.02 U		0.02 U	0.02 U	0.02 U
NICKEL			3.6 J		6.3 J		0.71 U		11.2 J		1.3 U	1.125 U	0.95 U
POTASSIUM			1790 J		1870 J		1780 J		3860 J		1590 J	1650 J	1710 J
SODIUM			8690 J		6040 J		15000 J		17400 J		5080 J	5145 J	5210 J
STRONTIUM													
TITANIUM			5.8 J		21.2 J		3.4 J		156 J		2 J	2.35 J	2.7 J
VANADIUM			0.63 J		2.2 J		0.33 U		19.0 J		0.56 U	0.425 U	0.29 U
ZINC			36.6 J		120		5.7 U		31.5 J		12.3 U	13.95 U	15.6 U
Dissolved Inorganics (ug/L)													
ALUMINUM	40.4 U			64.2 J		63.7 J		54.4 U		22.4 U			
ANTIMONY	3.2 J			0.56 U		0.47 U		0.32 U		0.29 U			
ARSENIC	2.8 J			0.07 U		0.07 U		0.15 U		0.11 U			
BARIUM	71.4 J			50.1 J		73.4 J		57.2 J		76.4 J			
CADMIUM	0.41 U			0.04 U		0.06 U		0.04 U		0.09 U			
CALCIUM	38200 J			18300 J		13600 J		37400 J		49100 J			
CHROMIUM	1.6 J			0.25 U		0.28 U		0.35 U		0.16 U			
COBALT	0.70 U			2.7 J		2.9 J		2.7 J		2.6 J			
COPPER	9.3 J			0.71 U		0.89 U		0.7 U		0.57 U			
IRON	42.5 U			37.7 U		62.2 U		34.9 U		18.1 U			
LEAD	2.3 J			0.08 U		0.38 U		0.06 U		0.15 U			
MAGNESIUM	6530 J			7760 J		7140 J		7390 J		8870 J			
MANGANESE	2.9 U			171 J		154 J		10.9 J		36.0 J			
MERCURY	0.020 U			0.02 U		0.02 U		0.02 U		0.04 J			
NICKEL	0.80 U			3.7 J		4.3 J		0.74 U		1.2 J			
POTASSIUM	2360 J			1640 J		1500 J		1810 J		2170 J			
SODIUM	89000 J			8240 J		5940 J		14000 J		17800 J			
STRONTIUM	237 J												
TITANIUM	2.2 J			1.4 J		1.6 J		3.4 J		1.1 U			
VANADIUM	0.66 U			0.15 U		0.18 U		0.2 U		0.12 U			
ZINC	68.3 J			39.2 J		82.2		13.8 U		3.1 J			
Miscellaneous Parameters (mg/L)													
AMMONIA-N													
NITRITE/NITRATE-N			0.11		0.27		3.2		0.05 U		0.05 U	0.0375	0.05

APPENDIX A
POSITIVE HITS TABLE
SURFACE WATER - ROUNDS 1 AND 2
SWMU 16 - B146 CAST HIGH EXPLOSIVES INCINERATOR
NSWC CRANE, INDIANA

LOCATION	16SW07	16SW07	16SW/SD12	16SW/SD12	16SW/SD13	16SW/SD13	16SW/SD14	16SW/SD14	16SW/SD15	16SW/SD15	16SW/SD17	16SW/SD17	16SW/SD17
NSAMPLE	16SW0701-F-D	16SW0702	16SW1201	16SW1201-F	16SW1301	16SW1301-F	16SW1401	16SW1401-F	16SW1501	16SW1501-F	16SW1701	16SW1701-AVG	16SW1701-D
SAMPLE	FD04100301-F	16SW0702	16SW1201	16SW1201-F	16SW1301	16SW1301-F	16SW1401	16SW1401-F	16SW1501	16SW1501-F	16SW1701	16SW1701-AVG	16FD10240301
MATRIX	SF	SW	SW	SF	SW	SF	SW	SF	SW	SF	SW	SW	SW
DEPTH RANGE	---	---	---	---	---	---	---	---	---	---	---	---	---
SAMPLE DATE	4/10/2003	12/6/2003	10/25/2003	10/25/2003	10/25/2003	10/25/2003	10/24/2003	10/24/2003	10/25/2003	10/25/2003	10/24/2003	10/24/2003	10/24/2003
VALIDATED	Y	Y	Y	Y	Y	Y	Y	Y	Y	Y	Y	Y	Y
COLLECTION METHOD	GRAB	GRAB	GRAB	GRAB	GRAB	GRAB	GRAB	GRAB	GRAB	GRAB	GRAB	GRAB	GRAB
Field Parameter													
DISSOLVED OXYGEN - METER (MG/L)		10.78	6		2.94		7.22		2.87		6.49	6.49	
OXIDATION REDUCTION POTENTIAL (MV)		123.4	195.4		68.3		254.7		194.1		204	204	
PH		7.68	7.21		6.4		7.14		6.51		6.93	6.93	
SPECIFIC CONDUCTANCE (MS/CM)		0.575	0.204		0.168		0.299		0.378		0.154	0.154	
TEMPERATURE (C)		12.2	13.24		13.68		11.7		12.45		9.61	9.61	
TURBIDITY (NTU)		5.3	4.06		15.9		2.57		15.9		3.39	3.39	

APPENDIX A
POSITIVE HITS TABLE
SURFACE WATER - ROUNDS 1 AND 2
SWMU 16 - B146 CAST HIGH EXPLOSIVES INCINERATOR
NSWC CRANE, INDIANA

LOCATION	16SW/SD17	16SW/SD17	16SW/SD17	16SW/SD18	16SW/SD18	16SW/SD20	16SW/SD20	16SW/SD21	16SW/SD21
NSAMPLE	16SW1701-F	16SW1701-F-AVG	16SW1701-F-D	16SW1801	16SW1801-F	16SW2001	16SW2001-F	16SW2101	16SW2101-F
SAMPLE	16SW1701-F	16SW1701-F-AVG	16FD10240301-F	16SW1801	16SW1801-F	16SW2001	16SW2001-F	16SW2101	16SW2101-F
MATRIX	SF	SF	SF	SW	SF	SW	SF	SW	SF
DEPTH RANGE	---	---	---	---	---	---	---	---	---
SAMPLE DATE	10/24/2003	10/24/2003	10/24/2003	10/24/2003	10/24/2003	10/25/2003	10/25/2003	10/24/2003	10/24/2003
VALIDATED	Y	Y	Y	Y	Y	Y	Y	Y	Y
COLLECTION METHOD	GRAB	GRAB	GRAB	GRAB	GRAB	GRAB	GRAB	GRAB	GRAB
Volatile Organics (ug/L)									
ACETONE				0.5 UR		0.6 J		0.5 UR	
CHLOROFORM				0.3 U		0.3 U		0.3 U	
CIS-1,2-DICHLOROETHENE				0.3 U		0.3 U		0.3 U	
TRICHLOROETHENE				0.3 U		0.3 U		0.3 U	
VINYL CHLORIDE				0.3 U		0.3 U		0.3 U	
Semivolatile Organics (ug/L)									
2-METHYLNAPHTHALENE									
ACENAPHTHENE									
ANTHRACENE									
BENZO(A)ANTHRACENE									
BIS(2-ETHYLHEXYL)PHTHALATE									
CHRYSENE									
FLUORANTHENE									
FLUORENE									
NAPHTHALENE									
PHENANTHRENE									
PYRENE									
Herbicides (ug/L)									
HEXACHLOROPHENE									
PENTACHLOROPHENOL									
Explosives (ug/L)									
2,4,6-TRINITROTOLUENE				0.25 U		0.26 U		0.25 U	
2-AMINO-4,6-DINITROTOLUENE				0.25 U		0.26 U		0.25 U	
4-AMINO-2,6-DINITROTOLUENE				0.25 U		0.26 U		0.25 U	
HMX				0.25 U		0.26 U		0.25 U	
RDX				0.25 U		0.26 U		0.25 U	
Total Inorganics (ug/L)									
ALUMINUM				32.9 U		485 J		891 J	
ANTIMONY				0.14 U		0.03 U		0.05 U	
ARSENIC				0.57 U		0.16 U		0.39 U	
BARIUM				23 J		54.2 J		53.4 J	
CADMIUM				0.04 U		0.04 U		0.05 U	
CALCIUM				9930 J		18400 J		16600 J	
CHROMIUM				0.63 U		0.78 J		1.3 U	
COBALT				0.33 U		0.32 U		0.38 U	
COPPER				2.7 J		0.96 U		1.7 U	

APPENDIX A
POSITIVE HITS TABLE
SURFACE WATER - ROUNDS 1 AND 2
SWMU 16 - B146 CAST HIGH EXPLOSIVES INCINERATOR
NSWC CRANE, INDIANA

LOCATION	16SW/SD17	16SW/SD17	16SW/SD17	16SW/SD18	16SW/SD18	16SW/SD20	16SW/SD20	16SW/SD21	16SW/SD21
NSAMPLE	16SW1701-F	16SW1701-F-AVG	16SW1701-F-D	16SW1801	16SW1801-F	16SW2001	16SW2001-F	16SW2101	16SW2101-F
SAMPLE	16SW1701-F	16SW1701-F-AVG	16FD10240301-F	16SW1801	16SW1801-F	16SW2001	16SW2001-F	16SW2101	16SW2101-F
MATRIX	SF	SF	SF	SW	SF	SW	SF	SW	SF
DEPTH RANGE	---	---	---	---	---	---	---	---	---
SAMPLE DATE	10/24/2003	10/24/2003	10/24/2003	10/24/2003	10/24/2003	10/25/2003	10/25/2003	10/24/2003	10/24/2003
VALIDATED	Y	Y	Y	Y	Y	Y	Y	Y	Y
COLLECTION METHOD	GRAB	GRAB	GRAB	GRAB	GRAB	GRAB	GRAB	GRAB	GRAB
IRON				15 U		263 J		599 J	
LEAD				0.64 U		0.26 U		0.5 U	
MAGNESIUM				2460 J		6700 J		5820 J	
MANGANESE				30 J		19.2 J		135 J	
MERCURY				0.02 U		0.02 U		0.02 U	
NICKEL				0.61 U		1.1 J		2.3 J	
POTASSIUM				790 J		2230 J		2030 J	
SODIUM				8330 J		10700 J		9580 J	
STRONTIUM									
TITANIUM				0.52 U		9.5 J		19.7 J	
VANADIUM				0.39 U		0.85 J		1.6 U	
ZINC				4.9 U		16.6 J		10.9 U	
Dissolved Inorganics (ug/L)									
ALUMINUM	10.8 U	11 U	11.2 U		18.2 U		33.9 U		164 J
ANTIMONY	0.25 U	0.28 U	0.31 U		0.2 U		0.14 U		0.25 U
ARSENIC	0.11 U	0.1 U	0.09 U		0.1 U		0.09 U		0.18 U
BARIUM	68.5 J	68.85 J	69.2 J		48.2 J		50.9 J		46.6 J
CADMIUM	0.04 U	0.04 U	0.04 U		0.1 U		0.04 U		0.04 U
CALCIUM	19800 J	20100 J	20400 J		10100 J		18100 J		15700 J
CHROMIUM	0.27 U	0.28 U	0.29 U		0.28 U		0.24 U		0.49 U
COBALT	0.11 U	0.855 U	1.6 U		2.6 J		2.9 J		3.1 J
COPPER	0.93 U	0.965 U	1 U		0.26 U		0.64 U		0.78 U
IRON	44.3 U	30.1 U	15.9 U		17.4 U		30.1 U		123 U
LEAD	0.08 U	0.075 U	0.07 U		0.14 U		0.08 U		0.11 U
MAGNESIUM	5890 J	5930 J	5970 J		3770 J		6510 J		5400 J
MANGANESE	9.7 U	8.525 J	12.2 J		12.5 J		14.5 J		29.8 J
MERCURY	0.02 U	0.02 U	0.02 U		0.02 U		0.02 U		0.02 U
NICKEL	0.83 U	0.915 U	1 U		1.4 U		1.2 J		1.3 U
POTASSIUM	1660 J	1670 J	1680 J		846 J		2140 J		1550 J
SODIUM	4850 J	4885 J	4920 J		4360 J		10600 J		9010 J
STRONTIUM									
TITANIUM	0.55 U	0.875 U	1.2 U		0.1 U		1.5 J		8.5 J
VANADIUM	0.09 U	0.08 U	0.07 U		0.06 U		0.11 U		0.35 U
ZINC	13.8 U	12.05 U	10.3 U		3.5 U		18.1 J		33.3 J
Miscellaneous Parameters (mg/L)									
AMMONIA-N									
NITRITE/NITRATE-N				0.05 U		0.05 U		0.07	

APPENDIX A
POSITIVE HITS TABLE
SURFACE WATER - ROUNDS 1 AND 2
SWMU 16 - B146 CAST HIGH EXPLOSIVES INCINERATOR
NSWC CRANE, INDIANA

LOCATION	16SW/SD17	16SW/SD17	16SW/SD17	16SW/SD18	16SW/SD18	16SW/SD20	16SW/SD20	16SW/SD21	16SW/SD21
NSAMPLE	16SW1701-F	16SW1701-F-AVG	16SW1701-F-D	16SW1801	16SW1801-F	16SW2001	16SW2001-F	16SW2101	16SW2101-F
SAMPLE	16SW1701-F	16SW1701-F-AVG	16FD10240301-F	16SW1801	16SW1801-F	16SW2001	16SW2001-F	16SW2101	16SW2101-F
MATRIX	SF	SF	SF	SW	SF	SW	SF	SW	SF
DEPTH RANGE	---	---	---	---	---	---	---	---	---
SAMPLE DATE	10/24/2003	10/24/2003	10/24/2003	10/24/2003	10/24/2003	10/25/2003	10/25/2003	10/24/2003	10/24/2003
VALIDATED	Y	Y	Y	Y	Y	Y	Y	Y	Y
COLLECTION METHOD	GRAB	GRAB	GRAB	GRAB	GRAB	GRAB	GRAB	GRAB	GRAB
Field Parameter									
DISSOLVED OXYGEN - METER (MG/L)				5.74		7.23		1.91	
OXIDATION REDUCTION POTENTIAL (MV)				251.6		183.4		239.6	
PH				6.39		7.08		6.78	
SPECIFIC CONDUCTANCE (MS/CM)				0.108		0.202		0.184	
TEMPERATURE (C)				12.88		13.75		15.12	
TURBIDITY (NTU)				1		7.95		10.59	

APPENDIX B

FREQUENCY OF DETECTION TABLES FOR

ROUND 1 AND ROUND 2

AT SWMUs 13 & 16 FOR

ALL SAMPLED MEDIA

SWMU 13

SWMU 13
GROUNDWATER – ROUND 1

AF[illegible]IX B
FREQUENCY OF [illegible]ETECTION TABLES
GROUND WATER - ROUND 1
SWMU 13 - MINE FILL B
NSWC CRANE, INDIANA

FEDMCL	FEDSMCL	R9TAPW	IDCLRGDF	CAS Number	Chemical	Minimum Concentration	Minimum Qualifier	Maximum Concentration	Maximum Qualifier	Units	Sample Containing Maximum Concentration
					Volatile Organics						
5	NA	0.028	5	79-01-6	TRICHLOROETHENE	1	J	1	J	UG/L	13GWT2001
					Explosives						
NA	NA	3.6	NA	99-65-0	1,3-DINITROBENZENE	0.3	J	1.4	J	UG/L	13GWT0901
NA	NA	2.2	NA	118-96-7	2,4,6-TRINITROTOLUENE	1.8		31		UG/L	13GWT1101
NA	NA	NA	NA	35572-78-2	2-AMINO-4,6-DINITROTOLUENE	3.7	J	8.6	J	UG/L	13GWT0901
NA	NA	NA	NA	19406-51-0	4-AMINO-2,6-DINITROTOLUENE	0.12	J	19		UG/L	13GWT1101
NA	NA	61	NA	99-99-0	4-NITROTOLUENE	0.5	J	0.5	J	UG/L	13GWT2101
NA	NA	1800	NA	2691-41-0	HMX	0.29	J	390		UG/L	13GWT2101
NA	NA	0.61	NA	121-82-4	RDX	0.4	J	2700		UG/L	13GWT2101
					Total Inorganics						
NA	50	36000	NA	7429-90-5	ALUMINUM	123	J	39000	J	UG/L	13GWT2501
10	NA	0.045	50	7440-38-2	ARSENIC	0.65	J	15.4	J	UG/L	13GWT2501
2000	NA	2600	2000	7440-39-3	BARIUM	10.4	J	401	J	UG/L	13GWT1901
4	NA	73	4	7440-41-7	BERYLLIUM	2.1	J	8.4	J	UG/L	13GWT0701
5	NA	18	5	7440-43-9	CADMIUM	2.7	J	2.7	J	UG/L	13GWT2501
NA	NA	NA	NA	7440-70-2	CALCIUM	2800	J	117000	J	UG/L	13GWT2501
100	NA	110	NA	7440-47-3	CHROMIUM	0.76	J	64.9	J	UG/L	13GWT2501
NA	NA	730	NA	7440-48-4	COBALT	1.5	J	246	J	UG/L	13GWT1001
1300	1000	1500	1300	7440-50-8	COPPER	0.83	J	89.5	J	UG/L	13GWT2501
NA	300	11000	NA	7439-89-6	IRON	127	J	143000	J	UG/L	13GWT2001
15	NA	NA	15	7439-92-1	LEAD	1.1	J	54.3	J	UG/L	13GWT2501
NA	NA	730	NA	7439-93-2	LITHIUM	2.3	J	340	J	UG/L	13GWT2001
NA	NA	NA	NA	7439-95-4	MAGNESIUM	2230	J	70300	J	UG/L	13GWT2001
NA	50	880	NA	7439-96-5	MANGANESE	172	J	11600	J	UG/L	13GWT2001
2	NA	11	2	7439-97-6	MERCURY	0.032	J	0.16	J	UG/L	13GWT0101
2	NA	11	2	7439-97-6	MERCURY	0.032	J	0.16	J	UG/L	13GWT0701
NA	NA	730	730	7440-02-0	NICKEL	2.9	J	477	J	UG/L	13GWT2001
NA	NA	NA	NA	7440-09-7	POTASSIUM	240	J	11000	J	UG/L	13GWT2501
50	NA	180	50	7782-49-2	SELENIUM	1.8	J	1.8	J	UG/L	13GWT2501
NA	NA	NA	NA	7440-23-5	SODIUM	6030	J	160000	J	UG/L	13GWT1901
NA	NA	22000	NA	7440-24-6	STRONTIUM	14.5	J	396	J	UG/L	13GWT0201
NA	NA	NA	NA	7440-32-6	TITANIUM	2.5	J	285	J	UG/L	13GWT2501
NA	NA	260	NA	7440-62-2	VANADIUM	0.63	J	75.3	J	UG/L	13GWT2501
NA	5000	11000	11000	7440-66-6	ZINC	3	J	661	J	UG/L	13GWT2001
					Dissolved Inorganics						
NA	50	36000	NA	7429-90-5	ALUMINUM	226	J	11800	J	UG/L	13GWT2001-F
10	NA	0.045	50	7440-38-2	ARSENIC	0.8	J	1.7	J	UG/L	13GWT2001-F
2000	NA	2600	2000	7440-39-3	BARIUM	15.6	J	71.1	J	UG/L	13GWT0301-F
4	NA	73	4	7440-41-7	BERYLLIUM	2	J	5.6	J	UG/L	13GWT2001-F
NA	NA	NA	NA	7440-70-2	CALCIUM	2980	J	70900	J	UG/L	13GWT2001-F
100	NA	110	NA	7440-47-3	CHROMIUM	1.3	J	2.7	J	UG/L	13GWT2001-F
NA	NA	730	NA	7440-48-4	COBALT	1.3	J	230	J	UG/L	13GWT2001-F

FEDMCL	FEDSMCL	R9TAPW	IDCLRGDF	CAS Number	Chemical	Minimum Concentration	Minimum Qualifier	Maximum Concentration	Maximum Qualifier	Units	Sample Containing Maximum Concentration
1300	1000	1500	1300	7440-50-8	COPPER	2.8	J	10.6	J	UG/L	13GWT2001-F
NA	300	11000	NA	7439-89-6	IRON	93.8	J	142000	J	UG/L	13GWT2001-F
15	NA	NA	15	7439-92-1	LEAD	11.5	J	11.5	J	UG/L	13GWT2001-F
NA	NA	730	NA	7439-93-2	LITHIUM	9.7	J	322	J	UG/L	13GWT2001-F
NA	NA	NA	NA	7439-95-4	MAGNESIUM	2500	J	67900	J	UG/L	13GWT2001-F
NA	50	880	NA	7439-96-5	MANGANESE	133	J	11500	J	UG/L	13GWT2001-F
NA	NA	730	730	7440-02-0	NICKEL	3.2	J	470	J	UG/L	13GWT2001-F
NA	NA	NA	NA	7440-09-7	POTASSIUM	366	J	7110	J	UG/L	13GWT0601-F
50	NA	180	50	7782-49-2	SELENIUM	2	J	2	J	UG/L	13GWT2501-F
NA	NA	NA	NA	7440-23-5	SODIUM	21800	J	55000	J	UG/L	13GWT0501-F
NA	NA	22000	NA	7440-24-6	STRONTIUM	13.6	J	188	J	UG/L	13GWT0501-F
NA	NA	NA	NA	7440-32-6	TITANIUM	2.6	J	9.3	J	UG/L	13GWT0601-F
NA	NA	260	NA	7440-62-2	VANADIUM	1.1	J	1.1	J	UG/L	13GWT0601-F
NA	5000	11000	11000	7440-66-6	ZINC	3.6	J	695		UG/L	13GWT2001-F
					Miscellaneous Parameters						
NA	NA	NA	NA	TTNUS493	AMMONIA-N	0.01		3.3		MG/L	13GWT0901
NA	NA	NA	NA	TTNUS494	NITRITE/NITRATE-N	0.03		92		MG/L	13GWT0901
					Field Parameters						
NA	NA	NA	NA	TTNUS034	DISSOLVED OXYGEN	0.11		4.5		MG/L	13GWT0301
NA	NA	NA	NA	TTNUS033	OXIDATION REDUCTION POTENTIAL	-30.4		364		MV	13GWT1001
NA	0	NA	NA	TTNUS002	PH	3.01		6.63		S.U.	13GWT0601
NA	NA	NA	NA	TTNUS038	SPECIFIC CONDUCTANCE	0.106		1.504		MS/CM	13GWT2001
NA	NA	NA	NA	TTNUS047	TEMPERATURE	12		16.76		C	13GWT2401
NA	NA	NA	NA	TTNUS023	TURBIDITY	0		999	>	NTU	13GWT2501

Associated Samples:

13GWT0101	13GWT1401
13GWT0201	13GWT1501
13GWT0301	13GWT1601
13GWT0301-F	13GWT1701
13GWT0401	13GWT1801
13GWT0501	13GWT1801-F
13GWT0501-F	13GWT1901
13GWT0601	13GWT2001
13GWT0601-F	13GWT2001-F
13GWT0701	13GWT2002
13GWT0801	13GWT2101
13GWT0901	13GWT2201
13GWT0902	13GWT2301
13GWT1001	13GWT2401
13GWT1101	13GWT2501
13GWT1201	13GWT2501-F
13GWT1201-F	13GWT2601

FEDMCL	FEDSMCL	R9TAPW	IDCLRGDF	CAS Number	Chemical	Minimum Concentration	Minimum Qualifier	Maximum Concentration	Maximum Qualifier	Units	Sample Containing Maximum Concentration
					13GWT1301						

APPENDIX B
FREQUENCY OF DETECTION TABLES
GROUND WATER - ROUND 1
SWMU 13 - MINE FILL B
NSWC CRANE, INDIANA

FEDSMCL	R9TAPW	IDCLRGDF	CAS Number	Chemical	Detection Frequency	Range of Nondetects
				Volatile Organics		
NA	0.028	5	79-01-6	TRICHLOROETHENE	1/2	0.3
				Explosives		
NA	3.6	NA	99-65-0	1,3-DINITROBENZENE	3/26	0.08 - 0.65
NA	2.2	NA	118-96-7	2,4,6-TRINITROTOLUENE	4/26	0.08 - 0.65
NA	NA	NA	35572-78-2	2-AMINO-4,6-DINITROTOLUENE	3/26	0.08 - 0.65
NA	NA	NA	19406-51-0	4-AMINO-2,6-DINITROTOLUENE	5/26	0.08 - 0.65
NA	61	NA	99-99-0	4-NITROTOLUENE	1/26	0.08 - 0.65
NA	1800	NA	2691-41-0	HMX	19/26	0.265 - 0.6
NA	0.61	NA	121-82-4	RDX	19/26	0.25 - 0.465
				Total Inorganics		
50	36000	NA	7429-90-5	ALUMINUM	24/26	47.3 - 57.1
NA	0.045	50	7440-38-2	ARSENIC	13/26	0.07 - 0.66
NA	2600	2000	7440-39-3	BARIUM	26/26	NA
NA	73	4	7440-41-7	BERYLLIUM	9/26	0.03 - 1.6
NA	18	5	7440-43-9	CADMIUM	1/26	0.05 - 1.9
NA	NA	NA	7440-70-2	CALCIUM	25/26	2580
NA	110	NA	7440-47-3	CHROMIUM	13/26	0.02 - 0.82
NA	730	NA	7440-48-4	COBALT	26/26	NA
1000	1500	1300	7440-50-8	COPPER	20/26	0.26 - 1.1
300	11000	NA	7439-89-6	IRON	23/26	25 - 117
NA	NA	15	7439-92-1	LEAD	11/26	0.14 - 2
NA	730	NA	7439-93-2	LITHIUM	26/26	NA
NA	NA	NA	7439-95-4	MAGNESIUM	26/26	NA
50	880	NA	7439-96-5	MANGANESE	24/26	56.3 - 57.6
NA	11	2	7439-97-6	MERCURY	5/26	0.02 - 0.2
NA	11	2	7439-97-6	MERCURY	5/26	0.02 - 0.2
NA	730	730	7440-02-0	NICKEL	26/26	NA
NA	NA	NA	7440-09-7	POTASSIUM	26/26	NA
NA	180	50	7782-49-2	SELENIUM	1/26	0.05 - 1.1
NA	NA	NA	7440-23-5	SODIUM	26/26	NA
NA	22000	NA	7440-24-6	STRONTIUM	26/26	NA
NA	NA	NA	7440-32-6	TITANIUM	24/26	1.9 - 2.1
NA	260	NA	7440-62-2	VANADIUM	10/26	0.05 - 0.72
5000	11000	11000	7440-66-6	ZINC	26/26	NA
				Dissolved Inorganics		
50	36000	NA	7429-90-5	ALUMINUM	7/7	NA
NA	0.045	50	7440-38-2	ARSENIC	3/7	0.36 - 0.51
NA	2600	2000	7440-39-3	BARIUM	7/7	NA
NA	73	4	7440-41-7	BERYLLIUM	2/7	0.05 - 1.1
NA	NA	NA	7440-70-2	CALCIUM	7/7	NA
NA	110	NA	7440-47-3	CHROMIUM	3/7	0.2 - 0.81
NA	730	NA	7440-48-4	COBALT	7/7	NA

FEDSMCL	R9TAPW	IDCLRGDF	CAS Number	Chemical	Detection Frequency	Range of Nondetects
1000	1500	1300	7440-50-8	COPPER	6/7	0.63
300	11000	NA	7439-89-6	IRON	7/7	NA
NA	NA	15	7439-92-1	LEAD	1/7	0.21 - 0.91
NA	730	NA	7439-93-2	LITHIUM	7/7	NA
NA	NA	NA	7439-95-4	MAGNESIUM	7/7	NA
50	880	NA	7439-96-5	MANGANESE	7/7	NA
NA	730	730	7440-02-0	NICKEL	7/7	NA
NA	NA	NA	7440-09-7	POTASSIUM	7/7	NA
NA	180	50	7782-49-2	SELENIUM	1/7	0.19 - 0.33
NA	NA	NA	7440-23-5	SODIUM	7/7	NA
NA	22000	NA	7440-24-6	STRONTIUM	7/7	NA
NA	NA	NA	7440-32-6	TITANIUM	6/7	2.8
NA	260	NA	7440-62-2	VANADIUM	1/7	0.05 - 0.8
5000	11000	11000	7440-66-6	ZINC	7/7	NA
				Miscellaneous Parameters		
NA	NA	NA	TTNUS493	AMMONIA-N	21/26	0.01
NA	NA	NA	TTNUS494	NITRITE/NITRATE-N	17/26	0.02
				Field Parameters		
NA	NA	NA	TTNUS034	DISSOLVED OXYGEN	28/28	NA
NA	NA	NA	TTNUS033	OXIDATION REDUCTION POTENTIAL	28/28	NA
0	NA	NA	TTNUS002	PH	28/28	NA
NA	NA	NA	TTNUS038	SPECIFIC CONDUCTANCE	28/28	NA
NA	NA	NA	TTNUS047	TEMPERATURE	28/28	NA
NA	NA	NA	TTNUS023	TURBIDITY	28/28	NA

Associated Samples:
13GWT0101
13GWT0201
13GWT0301
13GWT0301-F
13GWT0401
13GWT0501
13GWT0501-F
13GWT0601
13GWT0601-F
13GWT0701
13GWT0801
13GWT0901
13GWT0902
13GWT1001
13GWT1101
13GWT1201
13GWT1201-F

APPENDIX B
FREQUENCY OF DETECTION TABLES
GROUND WATER - ROUND 1
SWMU 13 - MINE FILL B
NSWC CRANE, INDIANA

FEDSMCL	R9TAPW	IDCLRGDF	CAS Number	Chemical	Detection Frequency	Range of Nondetects

13GWT1301

SWMU 13
GROUNDWATER – ROUND 2

APPENDIX B
FREQUENCY OF DETECTION TABLES
GROUND WATER - ROUND 2
SWMU 13 - MINE FILL B
NSWC CRANE, INDIANA

CAS Number	Chemical	Minimum Concentration	Minimum Qualifier	Maximum Concentration	Maximum Qualifier	Units	Sample Containing Maximum Concentration	Detection Frequency	Range of Nondetects
7440-09-7	POTASSIUM	358	J	27500	J	UG/L	13GWT0502	47/47	NA
7782-49-2	SELENIUM	4.1	J	5.1	J	UG/L	13GWT4101	3/47	0.04 - 2.2
7440-23-5	SODIUM	6800	J	166000	J	UG/L	13GWT3501	47/47	NA
7440-32-6	TITANIUM	2.8	J	659	J	UG/L	13GWT0502	28/47	0.13 - 2.2
7440-62-2	VANADIUM	1.9	J	135	J	UG/L	13GWT0502	15/47	0.06 - 1.4
7440-66-6	ZINC	0.5	J	1070	J	UG/L	13GWT4701	42/47	2.8 - 6.8
	Dissolved Inorganics								
7429-90-5	ALUMINUM	285	J	1990	J	UG/L	13GWT1502-F	4/15	18.3 - 164
7440-36-0	ANTIMONY	3	J	7.3	J	UG/L	13GWT3501-F	4/15	0.02 - 1
7440-38-2	ARSENIC	1.6	J	21.3	J	UG/L	13GWT3801-F	6/15	0.12 - 1.4
7440-39-3	BARIUM	9.6	J	93.6	J	UG/L	13GWT3901-F	15/15	NA
7440-41-7	BERYLLIUM	2.5	J	5.2	J	UG/L	13GWT1502-F	2/15	0.03 - 1.5
7440-70-2	CALCIUM	2250	J	48000	J	UG/L	13GWT3901-F	15/15	NA
7440-47-3	CHROMIUM	2.3	J	2.3	J	UG/L	13GWT3501-F	1/15	0.13 - 0.98
7440-48-4	COBALT	1.9	J	82.8	J	UG/L	13GWT1502-F	12/15	0.11 - 1.5
7440-50-8	COPPER	2.5	J	6.2	J	UG/L	13GWT0302-F	3/15	0.35 - 1.8
7439-89-6	IRON	447	J	16000	J	UG/L	13GWT1502-F	4/15	25.5 - 219
7439-92-1	LEAD	35.7	J	35.7	J	UG/L	13GWT1502-F	1/15	0.04 - 1
7439-95-4	MAGNESIUM	1800	J	26000	J	UG/L	13GWT0502-F	14/15	140 - 140
7439-96-5	MANGANESE	9	J	2000	J	UG/L	13GWT4201-F	12/15	3.7 - 30.9
7440-02-0	NICKEL	2.6	J	180	J	UG/L	13GWT1502-F	11/15	0.48 - 1.6
7440-09-7	POTASSIUM	1440	J	5390	J	UG/L	13GWT3501-F	14/15	151 - 151
7782-49-2	SELENIUM	2.5	J	4.2	J	UG/L	13GWT4101-F	3/15	0.04 - 2.4
7440-23-5	SODIUM	7100	J	161000	J	UG/L	13GWT3501-F	15/15	NA
7440-32-6	TITANIUM	3.6	J	3.6	J	UG/L	13GWT2502-F	1/15	0.42 - 3.8
7440-62-2	VANADIUM	2	J	7	J	UG/L	13GWT3801-F	3/15	0.07 - 0.68
7440-66-6	ZINC	2.1	J	222	J	UG/L	13GWT1502-F	14/15	1.7 - 1.7
	Miscellaneous Parameters								
TTNUS493	AMMONIA-N	0.01		3.4		MG/L	13GWT0903	33/47	0.005 - 0.01
TTNUS494	NITRITE/NITRATE-N	0.05	J	54	J	MG/L	13GWT0903	32/47	0.025 - 0.05
TTNUS003	TOTAL ORGANIC CARBON	1		1.1		MG/L	13GWT1502	2/3	0.5 - 0.5
	Field Parameters								
TTNUS008	ALKALINITY	0		200		MG/L	13GWT3501	7/25	10 - 10
124-38-9	CARBON DIOXIDE	23		400		MG/L	13GWT2003	22/25	10 - 10
TTNUS034	DISSOLVED OXYGEN	0.02		11		MG/L	13GWT1302	25/25	NA
TTNUS186	DISSOLVED OXYGEN - METER	0.44		34.37		MG/L	13GWT1902	47/47	NA

APPENDIX B
FREQUENCY OF DETECTION TABLES
GROUND WATER - ROUND 2
SWMU 13 - MINE FILL B
NSWC CRANE, INDIANA

CAS Number	Chemical	Minimum Concentration	Minimum Qualifier	Maximum Concentration	Maximum Qualifier	Units	Sample Containing Maximum Concentration	Detection Frequency	Range of Nondetects
TTNUS015	FERROUS IRON	0		3.3	>	MG/L	13GWT1502	25/25	NA
TTNUS015	FERROUS IRON	0		3.3	>	MG/L	13GWT2003	25/25	NA
TTNUS015	FERROUS IRON	0		3.3	>	MG/L	13GWT1102	25/25	NA
TTNUS015	FERROUS IRON	0		3.3	>	MG/L	13GWT1002	25/25	NA
TTNUS015	FERROUS IRON	0		3.3	>	MG/L	13GWT2901	25/25	NA
TTNUS210	HYDROGEN SULFIDE (H2S)	0		0		MG/L	13GWT1802	25/25	NA
TTNUS210	HYDROGEN SULFIDE (H2S)	0		0		MG/L	13GWT0202	25/25	NA
TTNUS210	HYDROGEN SULFIDE (H2S)	0		0		MG/L	13GWT2003	25/25	NA
TTNUS210	HYDROGEN SULFIDE (H2S)	0		0		MG/L	13GWT2602	25/25	NA
TTNUS210	HYDROGEN SULFIDE (H2S)	0		0		MG/L	13GWT3801	25/25	NA
TTNUS210	HYDROGEN SULFIDE (H2S)	0		0		MG/L	13GWT1202	25/25	NA
TTNUS210	HYDROGEN SULFIDE (H2S)	0		0		MG/L	13GWT0903	25/25	NA
TTNUS210	HYDROGEN SULFIDE (H2S)	0		0		MG/L	13GWT3601	25/25	NA
TTNUS210	HYDROGEN SULFIDE (H2S)	0		0		MG/L	13GWT3501	25/25	NA
TTNUS210	HYDROGEN SULFIDE (H2S)	0		0		MG/L	13GWT2102	25/25	NA
TTNUS210	HYDROGEN SULFIDE (H2S)	0		0		MG/L	13GWT0802	25/25	NA
TTNUS210	HYDROGEN SULFIDE (H2S)	0		0		MG/L	13GWT1102	25/25	NA
TTNUS210	HYDROGEN SULFIDE (H2S)	0		0		MG/L	13GWT1002	25/25	NA
TTNUS210	HYDROGEN SULFIDE (H2S)	0		0		MG/L	13GWT0302	25/25	NA
TTNUS210	HYDROGEN SULFIDE (H2S)	0		0		MG/L	13GWT1302	25/25	NA
TTNUS210	HYDROGEN SULFIDE (H2S)	0		0		MG/L	13GWT2402	25/25	NA
TTNUS210	HYDROGEN SULFIDE (H2S)	0		0		MG/L	13GWT2801	25/25	NA
TTNUS210	HYDROGEN SULFIDE (H2S)	0		0		MG/L	13GWT2302	25/25	NA
TTNUS210	HYDROGEN SULFIDE (H2S)	0		0		MG/L	13GWT2701	25/25	NA
TTNUS210	HYDROGEN SULFIDE (H2S)	0		0		MG/L	13GWT3401	25/25	NA
TTNUS210	HYDROGEN SULFIDE (H2S)	0		0		MG/L	13GWT0502	25/25	NA
TTNUS210	HYDROGEN SULFIDE (H2S)	0		0		MG/L	13GWT1702	25/25	NA
TTNUS210	HYDROGEN SULFIDE (H2S)	0		0		MG/L	13GWT2901	25/25	NA
TTNUS210	HYDROGEN SULFIDE (H2S)	0		0		MG/L	13GWT2202	25/25	NA
TTNUS210	HYDROGEN SULFIDE (H2S)	0		0		MG/L	13GWT1502	25/25	NA
7439-96-5	MANGANESE	0		8.3		MG/L	13GWT2003	25/25	NA
TTNUS496	NITRITE-N	0		0.031		MG/L	13GWT2102	25/25	NA
TTNUS033	OXIDATION REDUCTION POTENTIAL	-473		432		MV	13GWT0502	47/47	NA
TTNUS002	PH	3.34		11.39		S.U.	13GWT3801	47/47	NA
TTNUS038	SPECIFIC CONDUCTANCE	0.076		1634		MS/CM	13GWT4701	47/47	NA
18496-25-8	SULFIDE	0		0.14		MG/L	13GWT1502	25/25	NA

APPENDIX B
FREQUENCY OF DETECTION TABLES
GROUND WATER - ROUND 2
SWMU 13 - MINE FILL B
NSWC CRANE, INDIANA

CAS Number	Chemical	Minimum Concentration	Minimum Qualifier	Maximum Concentration	Maximum Qualifier	Units	Sample Containing Maximum Concentration	Detection Frequency	Range of Nondetects
TTNUS047	TEMPERATURE	8.83		19.73		C	13GWT1002	47/47	NA
TTNUS023	TURBIDITY	0		1000	>	NTU	13GWT3501	47/47	NA
TTNUS023	TURBIDITY	0		1000	>	NTU	13GWT4101	47/47	NA
TTNUS023	TURBIDITY	0		1000	>	NTU	13GWT4201	47/47	NA

SWMU 13
SURFACE SOIL – ROUND 1

APPENDIX B
FREQUENCY OF DETECTION TABLES
SURFACE SOIL - ROUND 1
SWMU 13 - MINE FILL B
NSWC CRANE, INDIANA

SSLDAF1	SSLINH	IDCLRESD	IDCLRSGW	R9SORES	R5DQLSO	CAS Number	Chemical	Minimum Concentration	Minimum Qualifier	Maximum Concentration	Maximum Qualifier	Units	Sample Containing Maximum Concentration	Detection Frequency	Range of Nondetects
							Volatiles								
34	NA	180000	680	69000	783.73	156-60-5	TRANS-1,2-DICHLOROETHENE	2	J	2	J	UG/KG	13SS060002	1/2	1.4
8000	1100000	NA	NA	390000	16400	75-69-4	TRICHLOROFLUOROMETHANE	2	J	3	J	UG/KG	13SS150002	2/2	NA
							Semivolatiles								
31000	NA	9500000	130000	3700000	682000	83-32-9	ACENAPHTHENE	52	J	52	J	UG/KG	13SS090002	1/12	3.8 - 4.9
650000	NA	47000000	51000	22000000	1480000	120-12-7	ANTHRACENE	5	J	210	J	UG/KG	13SS090002	2/12	3.8 - 4.9
80	NA	5100	19000	620	5210	56-55-3	BENZO(A)ANTHRACENE	4	J	1100	J	UG/KG	13SS090002	7/12	3.8 - 4.9
410	NA	510	8200	62	1520	50-32-8	BENZO(A)PYRENE	6	J	1000	J	UG/KG	13SS090002	6/12	3.8 - 4.9
200	NA	5100	57000	620	59800	205-99-2	BENZO(B)FLUORANTHENE	7	J	1100	J	UG/KG	13SS090002	7/12	3.8 - 4
NA	NA	NA	NA	2300000	119000	191-24-2	BENZO(G,H,I)PERYLENE	6	J	750	J	UG/KG	13SS090002	6/12	3.8 - 4.9
2000	NA	51000	39000	6200	148000	207-08-9	BENZO(K)FLUORANTHENE	5	J	640	J	UG/KG	13SS090002	7/12	3.8 - 4
180000	NA	310000	3600000	35000	925.94	117-81-7	BIS(2-ETHYLHEXYL)PHTHALATE	91	J	140	J	UG/KG	13SS060002	7/12	78 - 190
180000	NA	310000	3600000	35000	925.94	117-81-7	BIS(2-ETHYLHEXYL)PHTHALATE	91	J	140	J	UG/KG	13SS090002	7/12	78 - 190
8000	NA	510000	26000	62000	4730	218-01-9	CHRYSENE	7	J	1100	J	UG/KG	13SS090002	7/12	3.8 - 4
80	NA	510	18000	62	18400	53-70-3	DIBENZO(A,H)ANTHRACENE	200	J	200	J	UG/KG	13SS090002	1/12	3.8 - 4.9
310000	NA	6300000	880000	2300000	122000	206-44-0	FLUORANTHENE	6	J	1800	J	UG/KG	13SS090002	9/12	3.8 - 4
41000	NA	6300000	170000	2600000	122000	86-73-7	FLUORENE	50	J	50	J	UG/KG	13SS090002	1/12	3.8 - 4.9
700	NA	5100	3100	620	109000	193-39-5	INDENO(1,2,3-CD)PYRENE	4	J	650	J	UG/KG	13SS090002	6/12	3.8 - 4.9
3100	170000	3200000	700	56000	99.39	91-20-3	NAPHTHALENE	5	J	5	J	UG/KG	13SS100002	1/12	3.8 - 4.9
NA	NA	NA	NA	2300000	45700	85-01-8	PHENANTHRENE	4	J	1000	J	UG/KG	13SS090002	7/12	3.8 - 4.2
230000	NA	5500000	570000	2300000	78500	129-00-0	PYRENE	6	J	2400	J	UG/KG	13SS090002	9/12	3.8 - 4
							Pesticides/PCBs								
NA	5600000	NA	NA	220	679.71	12672-29-6	AROCLOR-1248	210		160000		UG/KG	13SS100002	11/12	20
							Dioxins/Furans								
NA	NA	NA	NA	39000	0.199	3268-87-9	1,2,3,4,6,7,8,9-OCDD	813	J	4140		NG/KG	13SS060002	12/12	NA
NA	NA	NA	NA	39000	38.6	39001-02-0	1,2,3,4,6,7,8,9-OCDF	0.55	J	9.5	J	NG/KG	13SS140001	4/12	0.2 - 2
NA	NA	NA	NA	390	0.199	35822-46-9	1,2,3,4,6,7,8-HPCDD	6.2		45.4		NG/KG	13SS060002	12/12	NA
NA	NA	NA	NA	390	38.6	67562-39-4	1,2,3,4,6,7,8-HPCDF	0.57	J	3.1	J	NG/KG	13SS100002	4/12	0.09 - 4
NA	NA	NA	NA	390	38.6	55673-89-7	1,2,3,4,7,8,9-HPCDF	1.3	J	1.3	J	NG/KG	13SS140001	1/12	0.1 - 0.7
NA	NA	NA	NA	39	0.199	39227-28-6	1,2,3,4,7,8-HXCDD	0.42	J	0.63	J	NG/KG	13SS130002	3/12	0.1 - 0.7
NA	NA	NA	NA	39	38.6	70648-26-9	1,2,3,4,7,8-HXCDF	1.8	J	6.4		NG/KG	13SS140001	2/12	0.07 - 1.2
NA	NA	NA	NA	39	0.199	57653-85-7	1,2,3,6,7,8-HXCDD	0.69	J	0.84	J	NG/KG	13SS140001	2/12	0.1 - 1
NA	NA	NA	NA	39	38.6	57117-44-9	1,2,3,6,7,8-HXCDF	1.6	J	1.6	J	NG/KG	13SS140001	1/12	0.07 - 0.41
3200	2500000	NA	NA	39	0.199	19408-74-3	1,2,3,7,8,9-HXCDD	0.72	J	1.6	J	NG/KG	13SS130002	5/12	0.1 - 2
NA	NA	NA	NA	39	38.6	72918-21-9	1,2,3,7,8,9-HXCDF	0.31	J	0.33	J	NG/KG	13SS140001	2/12	0.09 - 0.5
NA	NA	NA	NA	3.9	0.199	40321-76-4	1,2,3,7,8-PECDD	0.71	J	0.71	J	NG/KG	13SS130002	1/12	0.1 - 0.8
NA	NA	NA	NA	78	38.6	57117-41-6	1,2,3,7,8-PECDF	0.36	J	2.5	J	NG/KG	13SS140001	2/12	0.09 - 0.4
NA	NA	NA	NA	39	38.6	60851-34-5	2,3,4,6,7,8-HXCDF	0.21	J	1.8	J	NG/KG	13SS140001	4/12	C

APPENDIX B
FREQUENCY OF DETECTION TABLES
SURFACE SOIL - ROUND 1
SWMU 13 - MINE FILL B
NSWC CRANE, INDIANA

SSLDAF1	SSLINH	IDCLRESD	IDCLRSGW	R9SORES	R5DQLSO	CAS Number	Chemical	Minimum Concentration	Minimum Qualifier	Maximum Concentration	Maximum Qualifier	Units	Sample Containing Maximum Concentration	Detection Frequency	Range of Nondetects
NA	NA	NA	NA	7.8	38.6	57117-31-4	2,3,4,7,8-PECDF	0.47	J	21.8		NG/KG	13SS140001	7/12	0.1 - 0.53
0.28	43	NA	NA	3.9	0.199	1746-01-6	2,3,7,8-TCDD	0.52	J	0.52	J	NG/KG	13SS090002	1/12	0.1 - 1.2
NA	NA	NA	NA	39	38.6	51207-31-9	2,3,7,8-TCDF	0.35	J	21		NG/KG	13SS140001	10/12	0.1 - 0.3
NA	NA	NA	NA	NA	NA	37871-00-4	TOTAL HPCDD	11.8		112		NG/KG	13SS060002	12/12	NA
NA	NA	NA	NA	NA	NA	38998-75-3	TOTAL HPCDF	0.38	J	10.1	J	NG/KG	13SS140001	7/12	0.1 - 1.9
NA	NA	NA	NA	9.4	NA	34465-46-8	TOTAL HXCDD	0.77	J	15.7	J	NG/KG	13SS050002	11/12	1.1
NA	NA	NA	NA	NA	NA	55684-94-1	TOTAL HXCDF	0.33		19.4	J	NG/KG	13SS140001	8/12	0.07 - 0.2
NA	NA	NA	NA	NA	NA	36088-22-9	TOTAL PECDD	0.71		0.71		NG/KG	13SS130002	1/12	0.1 - 2.8
NA	NA	NA	NA	NA	NA	30402-15-4	TOTAL PECDF	0.83		135	J	NG/KG	13SS140001	9/12	0.1 - 0.3
NA	NA	NA	NA	NA	NA	41903-57-5	TOTAL TCDD	0.52		2.1	J	NG/KG	13SS060002	2/12	0.1 - 2.2
NA	NA	NA	NA	NA	NA	55722-27-5	TOTAL TCDF	1.8		540	J	NG/KG	13SS140001	11/12	0.1
							Miscellaneous Parameters								
NA	NA	NA	NA	NA	NA	TTNUS014	CATION EXCHANGE CAPACITY	14		15		MEQ/1	13SS080002	2/2	NA
NA	NA	NA	NA	NA	NA	TTNUS002	PH	5.1		7.4		S.U.	13SS070002	2/2	NA

Associated Samples:
13SS010002
13SS020002
13SS030002
13SS040002
13SS050002
13SS060002
13SS070002
13SS080002
13SS090002
13SS100002
13SS110002
13SS120002
13SS130002
13SS140001
13SS150002

SWMU 13
SURFACE SOIL – ROUND 2

APPENDIX B
FREQUENCY OF DETECTION TABLES
SURFACE SOIL - ROUND 2
SWMU 13 - MINE FILL B
NSWC CRANE, INDIANA

ssldaf1	sslinh	idclresd	idclrsgw	r9sores	r5dqlso	CAS Number	Chemical	Minimum Concentration	Minimum Qualifier	Maximum Concentration	Maximum Qualifier	Units	Sample Containing Maximum Concentration	Detection Frequency	Range of Nondetects
							Volatile Organic Compounds								
34	NA	180000	680	69000	783.73	156-60-5	TRANS-1,2-DICHLOROETHENE	2	J	2	J	UG/KG	13SS060002	1/2	1.4 - 1.4
8000	1100000	NA	NA	390000	16400	75-69-4	TRICHLOROFLUOROMETHANE	2	J	3	J	UG/KG	13SS150002	2/2	NA
							Semivolatile Organic Compounds								
31000	NA	9500000	130000	3700000	682000	83-32-9	ACENAPHTHENE	52	J	52	J	UG/KG	13SS090002	1/12	3.8 - 4.9
650000	NA	47000000	51000	22000000	1480000	120-12-7	ANTHRACENE	5	J	210	J	UG/KG	13SS090002	2/12	3.8 - 4.9
80	NA	5100	19000	620	5210	56-55-3	BENZO(A)ANTHRACENE	4	J	1100	J	UG/KG	13SS090002	7/12	3.8 - 4.9
410	NA	510	8200	62	1520	50-32-8	BENZO(A)PYRENE	6	J	1000	J	UG/KG	13SS090002	6/12	3.8 - 4.9
200	NA	5100	57000	620	59800	205-99-2	BENZO(B)FLUORANTHENE	7	J	1100	J	UG/KG	13SS090002	7/12	3.8 - 4
NA	NA	NA	NA	2300000	119000	191-24-2	BENZO(G,H,I)PERYLENE	6	J	750	J	UG/KG	13SS090002	6/12	3.8 - 4.9
2000	NA	51000	39000	6200	148000	207-08-9	BENZO(K)FLUORANTHENE	5	J	640	J	UG/KG	13SS090002	7/12	3.8 - 4
180000	NA	310000	3600000	35000	925.94	117-81-7	BIS(2-ETHYLHEXYL)PHTHALATE	91	J	140	J	UG/KG	13SS090002	7/12	78 - 190
180000	NA	310000	3600000	35000	925.94	117-81-7	BIS(2-ETHYLHEXYL)PHTHALATE	91	J	140	J	UG/KG	13SS060002	7/12	78 - 190
8000	NA	510000	26000	62000	4730	218-01-9	CHRYSENE	7	J	1100	J	UG/KG	13SS090002	7/12	3.8 - 4
80	NA	510	18000	62	18400	53-70-3	DIBENZO(A,H)ANTHRACENE	200	J	200	J	UG/KG	13SS090002	1/12	3.8 - 4.9
310000	NA	6300000	880000	2300000	122000	206-44-0	FLUORANTHENE	6	J	1800	J	UG/KG	13SS090002	9/12	3.8 - 4
41000	NA	6300000	170000	2600000	122000	86-73-7	FLUORENE	50	J	50	J	UG/KG	13SS090002	1/12	3.8 - 4.9
700	NA	5100	3100	620	109000	193-39-5	INDENO(1,2,3-CD)PYRENE	4	J	650	J	UG/KG	13SS090002	6/12	3.8 - 4.9
3100	170000	3200000	700	56000	99.39	91-20-3	NAPHTHALENE	5	J	5	J	UG/KG	13SS100002	1/12	3.8 - 4.9
NA	NA	NA	NA	2300000	45700	85-01-8	PHENANTHRENE	4	J	1000	J	UG/KG	13SS090002	7/12	3.8 - 4.2
230000	NA	5500000	570000	2300000	78500	129-00-0	PYRENE	6	J	2400	J	UG/KG	13SS090002	9/12	3.8 - 4
							PCBs								
NA	5600000	NA	NA	220	679.71	12672-29-6	AROCLOR-1248	50	J	160000		UG/KG	13SS100002	18/22	17 - 20
							Dioxins								
NA	NA	NA	NA	39000	0.199	3268-87-9	1,2,3,4,6,7,8,9-OCDD	813	J	4140		NG/KG	13SS060002	12/12	NA
NA	NA	NA	NA	39000	38.6	39001-02-0	1,2,3,4,6,7,8,9-OCDF	0.55	J	9.5	J	NG/KG	13SS140001	4/12	0.2 - 2
NA	NA	NA	NA	390	0.199	35822-46-9	1,2,3,4,6,7,8-HPCDD	6.2		45.4		NG/KG	13SS060002	12/12	NA
NA	NA	NA	NA	390	38.6	67562-39-4	1,2,3,4,6,7,8-HPCDF	0.57	J	3.1	J	NG/KG	13SS100002	4/12	0.09 - 4
NA	NA	NA	NA	390	38.6	55673-89-7	1,2,3,4,7,8,9-HPCDF	1.3	J	1.3	J	NG/KG	13SS140001	1/12	0.1 - 0.7
NA	NA	NA	NA	39	0.199	39227-28-6	1,2,3,4,7,8-HXCDD	0.42	J	0.63	J	NG/KG	13SS130002	3/12	0.1 - 0.7
NA	NA	NA	NA	39	38.6	70648-26-9	1,2,3,4,7,8-HXCDF	1.8	J	6.4		NG/KG	13SS140001	2/12	0.07 - 1.2
NA	NA	NA	NA	39	0.199	57653-85-7	1,2,3,6,7,8-HXCDD	0.69	J	0.84	J	NG/KG	13SS140001	2/12	0.1 - 1
NA	NA	NA	NA	39	38.6	57117-44-9	1,2,3,6,7,8-HXCDF	1.6	J	1.6	J	NG/KG	13SS140001	1/12	0.07 - 0.41
3200	2500000	NA	NA	39	0.199	19408-74-3	1,2,3,7,8,9-HXCDD	0.72	J	1.6	J	NG/KG	13SS130002	5/12	0.1 - 2
NA	NA	NA	NA	39	38.6	72918-21-9	1,2,3,7,8,9-HXCDF	0.31	J	0.33	J	NG/KG	13SS140001	2/12	0.09 - 0.5
NA	NA	NA	NA	3.9	0.199	40321-76-4	1,2,3,7,8-PECDD	0.71	J	0.71	J	NG/KG	13SS130002	1/12	0.1 - 0.8
NA	NA	NA	NA	78	38.6	57117-41-6	1,2,3,7,8-PECDF	0.36	J	2.5	J	NG/KG	13SS140001	2/12	0.09 - 0.4
NA	NA	NA	NA	39	38.6	60851-34-5	2,3,4,6,7,8-HXCDF	0.21	J	1.8	J	NG/KG	13SS140001	4/12	0.07 - 0.4

APPENDIX B
FREQUENCY OF DETECTION TABLES
SURFACE SOIL - ROUND 2
SWMU 13 - MINE FILL B
NSWC CRANE, INDIANA

ssldaf1	sslinh	idclresd	idclrsgw	r9sores	r5dqlso	CAS Number	Chemical	Minimum Concentration	Minimum Qualifier	Maximum Concentration	Maximum Qualifier	Units	Sample Containing Maximum Concentration	Detection Frequency	Range of Nondetects
NA	NA	NA	NA	7.8	38.6	57117-31-4	2,3,4,7,8-PECDF	0.47	J	21.8		NG/KG	13SS140001	7/12	0.1 - 0.53
0.28	43	NA	NA	3.9	0.199	1746-01-6	2,3,7,8-TCDD	0.52	J	0.52	J	NG/KG	13SS090002	1/12	0.1 - 1.2
NA	NA	NA	NA	39	38.6	51207-31-9	2,3,7,8-TCDF	0.35	J	21		NG/KG	13SS140001	10/12	0.1 - 0.3
NA	NA	NA	NA	NA	NA	37871-00-4	TOTAL HPCDD	11.8		112		NG/KG	13SS060002	12/12	NA
NA	NA	NA	NA	NA	NA	38998-75-3	TOTAL HPCDF	0.38	J	10.1	J	NG/KG	13SS140001	7/12	0.1 - 1.9
NA	NA	NA	NA	9.4	NA	34465-46-8	TOTAL HXCDD	0.77	J	15.7	J	NG/KG	13SS050002	11/12	1.1 - 1.1
NA	NA	NA	NA	NA	NA	55684-94-1	TOTAL HXCDF	0.33		19.4	J	NG/KG	13SS140001	8/12	0.07 - 0.2
NA	NA	NA	NA	NA	NA	36088-22-9	TOTAL PECDD	0.71		0.71		NG/KG	13SS130002	1/12	0.1 - 2.8
NA	NA	NA	NA	NA	NA	30402-15-4	TOTAL PECDF	0.83		135	J	NG/KG	13SS140001	9/12	0.1 - 0.3
NA	NA	NA	NA	NA	NA	41903-57-5	TOTAL TCDD	0.52		2.1	J	NG/KG	13SS060002	2/12	0.1 - 2.2
NA	NA	NA	NA	NA	NA	55722-27-5	TOTAL TCDF	1.8		540	J	NG/KG	13SS140001	11/12	0.1 - 0.1
							Miscellaneous Parameters								
NA	NA	NA	NA	NA	NA	TTNUS014	CATION EXCHANGE CAPACITY	14		15		MEQ/1	13SS080002	2/2	NA
NA	NA	NA	NA	NA	NA	TTNUS002	PH	5.1		7.4		S.U.	13SS070002	2/2	NA

Associated Samples:

13SS010002	13SS140001
13SS020002	13SS150002
13SS030002	13SS160002
13SS040002	13SS170002
13SS050002	13SS180002
13SS060002	13SS190002
13SS070002	13SS200002
13SS080002	13SS210002
13SS090002	13SS220002
13SS100002	13SS230002
13SS110002	13SS240002
13SS120002	13SS250002
13SS130002	

SWMU 13
SUBSURFACE SOIL – ROUND 1

APPENDIX B
FREQUENCY OF DETECTION TABLES
SUBSURFACE SOIL - ROUND 1
SWMU 13 - MINE FILL B
NSWC CRANE, INDIANA

SSLDAF1	SSLINH	IDCLRESD	IDCLRSGW	R9SORES	R5DQLSO	CAS Number	Chemical	Minimum Concentration	Minimum Qualifier	Maximum Concentration	Maximum Qualifier	Units	Sample Containing Maximum Concentration	Detection Frequency	Range of Nondetects
							Volatiles								
4400	9000000	20000000	11000	7300000	89600	78-93-3	2-BUTANONE	18		18		UG/KG	13SB150204	1/2	1
620	490000	1100000	990	790000	443000	108-10-1	4-METHYL-2-PENTANONE	3	J	3	J	UG/KG	13SB150204	1/2	1
730	NA	3900000	3100	1600000	2500	67-64-1	ACETONE	89		89		UG/KG	13SB150204	1/2	1
28000	250000	NA	NA	94000	39500	75-71-8	DICHLORODIFLUOROMETHANE	7	J	7	J	UG/KG	13SB150204	1/2	1
8000	1100000	NA	NA	390000	16400	75-69-4	TRICHLOROFLUOROMETHANE	2	J	3	J	UG/KG	13SB150204	2/2	NA
							Semivolatiles								
NA	NA	NA	NA	310000	NA	TTNUS042	3&4-METHYLPHENOL	560		560		UG/KG	13SB090204	1/11	76 - 87
180000	NA	310000	3600000	35000	925.94	117-81-7	BIS(2-ETHYLHEXYL)PHTHALATE	90	J	130	J	UG/KG	13SB050204	6/11	76 - 83
8000	NA	510000	26000	62000	4730	218-01-9	CHRYSENE	4	J	4	J	UG/KG	13SB020204	1/11	3.7 - 4.3
310000	NA	6300000	880000	2300000	122000	206-44-0	FLUORANTHENE	7	J	7	J	UG/KG	13SB020204	1/11	3.7 - 4.3
NA	NA	NA	NA	2300000	45700	85-01-8	PHENANTHRENE	6	J	6	J	UG/KG	13SB020204	1/11	3.7 - 4.3
2800	NA	88000000	110000	37000000	120000	108-95-2	PHENOL	110	J	110	J	UG/KG	13SB090204	1/11	76 - 87
230000	NA	5500000	570000	2300000	78500	129-00-0	PYRENE	13		13		UG/KG	13SB020204	1/11	3.7 - 4.3
							Pesticides/PCBs								
NA	5600000	NA	NA	220	679.71	12672-29-6	AROCLOR-1248	59	J	210000		UG/KG	13SB100204	7/11	20
							Herbicides								
1.4	NA	20000	28	3000	119.27	87-86-5	PENTACHLOROPHENOL	0.67	J	0.85	J	UG/KG	13SB010204	2/11	0.51 - 0.58
							Dioxins/Furans								
NA	NA	NA	NA	39000	0.199	3268-87-9	1,2,3,4,6,7,8,9-OCDD	330		4430		NG/KG	13SB010204	11/11	NA
NA	NA	NA	NA	39000	38.6	39001-02-0	1,2,3,4,6,7,8,9-OCDF	2.9	J	2.9	J	NG/KG	13SB100204	1/11	0.1 - 3.4
NA	NA	NA	NA	390	0.199	35822-46-9	1,2,3,4,6,7,8-HPCDD	5		26.2		NG/KG	13SB010204	11/11	NA
NA	NA	NA	NA	390	38.6	67562-39-4	1,2,3,4,6,7,8-HPCDF	0.69		1.1	J	NG/KG	13SB100204	2/11	0.08 - 1.3
NA	NA	NA	NA	39	0.199	39227-28-6	1,2,3,4,7,8-HXCDD	0.44	J	0.44	J	NG/KG	13SB130204	1/11	0.09 - 1.5
NA	NA	NA	NA	39	38.6	70648-26-9	1,2,3,4,7,8-HXCDF	0.73		2.7	J	NG/KG	13SB040204	3/11	0.07 - 0.2
3200	2500000	NA	NA	39	0.199	19408-74-3	1,2,3,7,8,9-HXCDD	0.53	J	1.1	J	NG/KG	13SB110204	5/11	0.1 - 1.5
NA	NA	NA	NA	3.9	0.199	40321-76-4	1,2,3,7,8-PECDD	0.21	J	0.21	J	NG/KG	13SB120204	1/11	0.1 - 1.1
NA	NA	NA	NA	78	38.6	57117-41-6	1,2,3,7,8-PECDF	0.3	J	0.31		NG/KG	13SB090204	2/11	0.08 - 0.7
NA	NA	NA	NA	39	38.6	60851-34-5	2,3,4,6,7,8-HXCDF	0.09	J	0.59	J	NG/KG	13SB100204	2/11	0.07 - 0.8
NA	NA	NA	NA	7.8	38.6	57117-31-4	2,3,4,7,8-PECDF	0.31	J	15.4		NG/KG	13SB040204	3/11	0.1 - 0.66
NA	NA	NA	NA	39	38.6	51207-31-9	2,3,7,8-TCDF	2.9		5.2		NG/KG	13SB100204	2/11	0.09 - 0.5
NA	NA	NA	NA	NA	NA	37871-00-4	TOTAL HPCDD	8.7		52.1		NG/KG	13SB050204	11/11	NA
NA	NA	NA	NA	NA	NA	38998-75-3	TOTAL HPCDF	1.5	J	2	J	NG/KG	13SB100204	2/11	0.1 - 1.4
NA	NA	NA	NA	9.4	NA	34465-46-8	TOTAL HXCDD	0.65	J	4.2	J	NG/KG	13SB050204	9/11	0.2 - 1.4
NA	NA	NA	NA	NA	NA	55684-94-1	TOTAL HXCDF	0.43		5.4	J	NG/KG	13SB100204	4/11	0.07 - 0.13
NA	NA	NA	NA	NA	NA	36088-22-9	TOTAL PECDD	0.21		0.21		NG/KG	13SB120204	1/11	0.1 - 1.4
NA	NA	NA	NA	NA	NA	30402-15-4	TOTAL PECDF	0.3		71.8	J	NG/KG	13SB040204	5/11	0.09 - 0.49
NA	NA	NA	NA	NA	NA	41903-57-5	TOTAL TCDD	0.15		3	J	NG/KG	13SB100204	2/11	0.1 - 5.2
NA	NA	NA	NA	NA	NA	55722-27-5	TOTAL TCDF	1.7		292	J	NG/KG	13SB040204	5/11	0.09 - 1.3

APPENDIX B
FREQUENCY OF DETECTION TABLES
SUBSURFACE SOIL - ROUND 1
SWMU 13 - MINE FILL B
NSWC CRANE, INDIANA

SSLDAF1	SSLINH	IDCLRESD	IDCLRSGW	R9SORES	R5DQLSO	CAS Number	Chemical	Minimum Concentration	Minimum Qualifier	Maximum Concentration	Maximum Qualifier	Units	Sample Containing Maximum Concentration	Detection Frequency	Range of Nondetects
							Miscellaneous Parameters								
NA	NA	NA	NA	NA	NA	TTNUS014	CATION EXCHANGE CAPACITY	13		14		MEQ/1	13SB070810	2/2	NA
NA	NA	NA	NA	NA	NA	TTNUS002	PH	5.3		5.8		S.U.	13SB080608	2/2	NA
NA	NA	NA	NA	NA	NA	TTNUS003	TOTAL ORGANIC CARBON	1100	J	1100	J	MG/KG	13SB070810	1/2	1000

Associated Samples:
13SB010204
13SB020204
13SB030204
13SB040204
13SB050204
13SB060204
13SB070810
13SB080608
13SB090204
13SB100204
13SB110204
13SB120204
13SB130204
13SB150204

SWMU 13
SUBSURFACE SOIL – ROUND 2

APPENDIX B
FREQUENCY OF DETECTION TABLES
SUBSURFACE SOIL - ROUND 2
SWMU 13 - MINE FILL B
NSWC CRANE, INDIANA

ssldaf1	sslinh	idclresd	idclrsgw	r9sores	r5dqlso	CAS Number	Chemical	Minumum Concentration	Minimum Qualifier	Maximum Concentration	Maximum Qualifier	Units	Sample Containing Maximum Concentration	Detection Frequency	Range of Nondetects
							Volatile Organic Compounds								
4400	9000000	20000000	11000	7300000	89600	78-93-3	2-BUTANONE	18		18		UG/KG	13SB150204	1/2	1 - 1
620	490000	1100000	990	790000	443000	108-10-1	4-METHYL-2-PENTANONE	3	J	3	J	UG/KG	13SB150204	1/2	1 - 1
730	NA	3900000	3100	1600000	2500	67-64-1	ACETONE	89	BJ	89	BJ	UG/KG	13SB150204	1/2	1 - 1
28000	250000	NA	NA	94000	39500	75-71-8	DICHLORODIFLUOROMETHANE	7	J	7	J	UG/KG	13SB150204	1/2	1 - 1
8000	1100000	NA	NA	390000	16400	75-69-4	TRICHLOROFLUOROMETHANE	2	J	3	J	UG/KG	13SB150204	2/2	NA
							Semivolatile Organic Compounds								
NA	NA	NA	NA	310000	NA	TTNUS042	3&4-METHYLPHENOL	560		560		UG/KG	13SB090204	1/11	76 - 87
180000	NA	310000	3600000	35000	925.94	117-81-7	BIS(2-ETHYLHEXYL)PHTHALATE	90	J	130	J	UG/KG	13SB050204	6/11	76 - 83
8000	NA	510000	26000	62000	4730	218-01-9	CHRYSENE	4	J	4	J	UG/KG	13SB020204	1/11	3.7 - 4.3
310000	NA	6300000	880000	2300000	122000	206-44-0	FLUORANTHENE	7	J	7	J	UG/KG	13SB020204	1/11	3.7 - 4.3
NA	NA	NA	NA	2300000	45700	85-01-8	PHENANTHRENE	6	J	6	J	UG/KG	13SB020204	1/11	3.7 - 4.3
2800	NA	88000000	110000	37000000	120000	108-95-2	PHENOL	110	J	110	J	UG/KG	13SB090204	1/11	76 - 87
230000	NA	5500000	570000	2300000	78500	129-00-0	PYRENE	13		13		UG/KG	13SB020204	1/11	3.7 - 4.3
							PCBs								
NA	5600000	NA	NA	220	679.71	12672-29-6	AROCLOR-1248	21	J	210000		UG/KG	13SB100204	12/20	17 - 20
	1						**Herbicides**								
1.4	NA	20000	28	3000	119.27	87-86-5	PENTACHLOROPHENOL	0.67	J	0.85	J	UG/KG	13SB010204	2/11	0.51 - 0.58
							Dioxins								
NA	NA	NA	NA	39000	0.199	3268-87-9	1,2,3,4,6,7,8,9-OCDD	330		4430		NG/KG	13SB010204	11/11	NA
NA	NA	NA	NA	39000	38.6	39001-02-0	1,2,3,4,6,7,8,9-OCDF	2.9	J	2.9	J	NG/KG	13SB100204	1/11	0.1 - 3.4
NA	NA	NA	NA	390	0.199	35822-46-9	1,2,3,4,6,7,8-HPCDD	5		26.2		NG/KG	13SB010204	11/11	NA
NA	NA	NA	NA	390	38.6	67562-39-4	1,2,3,4,6,7,8-HPCDF	0.69		1.1	J	NG/KG	13SB100204	2/11	0.08 - 1.3
NA	NA	NA	NA	39	0.199	39227-28-6	1,2,3,4,7,8-HXCDD	0.44	J	0.44	J	NG/KG	13SB130204	1/11	0.09 - 1.5
NA	NA	NA	NA	39	38.6	70648-26-9	1,2,3,4,7,8-HXCDF	0.73		2.7	J	NG/KG	13SB040204	3/11	0.07 - 0.2
3200	2500000	NA	NA	39	0.199	19408-74-3	1,2,3,7,8,9-HXCDD	0.53	J	1.1	J	NG/KG	13SB110204	5/11	0.1 - 1.5
NA	NA	NA	NA	3.9	0.199	40321-76-4	1,2,3,7,8-PECDD	0.21	J	0.21	J	NG/KG	13SB120204	1/11	0.1 - 1.1
NA	NA	NA	NA	78	38.6	57117-41-6	1,2,3,7,8-PECDF	0.3	J	0.31		NG/KG	13SB090204	2/11	0.08 - 0.7
NA	NA	NA	NA	39	38.6	60851-34-5	2,3,4,6,7,8-HXCDF	0.09	J	0.59	J	NG/KG	13SB100204	2/11	0.07 - 0.8
NA	NA	NA	NA	7.8	38.6	57117-31-4	2,3,4,7,8-PECDF	0.31	J	15.4		NG/KG	13SB040204	3/11	0.1 - 0.66
NA	NA	NA	NA	39	38.6	51207-31-9	2,3,7,8-TCDF	2.9		5.2		NG/KG	13SB100204	2/11	0.09 - 0.5
NA	NA	NA	NA	NA	NA	37871-00-4	TOTAL HPCDD	8.7		52.1		NG/KG	13SB050204	11/11	NA
NA	NA	NA	NA	NA	NA	38998-75-3	TOTAL HPCDF	1.5	J	2	J	NG/KG	13SB100204	2/11	0.1 - 1.4
NA	NA	NA	NA	9.4	NA	34465-46-8	TOTAL HXCDD	0.65	J	4.2	J	NG/KG	13SB050204	9/11	0.2 - 1.4
NA	NA	NA	NA	NA	NA	55684-94-1	TOTAL HXCDF	0.43		5.4	J	NG/KG	13SB100204	4/11	0.07 - 0.13
NA	NA	NA	NA	NA	NA	36088-22-9	TOTAL PECDD	0.21		0.21		NG/KG	13SB120204	1/11	0.1 - 1.4
NA	NA	NA	NA	NA	NA	30402-15-4	TOTAL PECDF	0.3		71.8	J	NG/KG	13SB040204	5/11	0.09 - 0.49

APPENDIX B
FREQUENCY OF DETECTION TABLES
SUBSURFACE SOIL - ROUND 2
SWMU 13 - MINE FILL B
NSWC CRANE, INDIANA

ssldaf1	sslinh	idclresd	idclrsgw	r9sores	r5dqlso	CAS Number	Chemical	Minumum Concentration	Minimum Qualifier	Maximum Concentration	Maximum Qualifier	Units	Sample Containing Maximum Concentration	Detection Frequency	Range of Nondetects
NA	NA	NA	NA	NA	NA	41903-57-5	TOTAL TCDD	0.15		3	J	NG/KG	13SB100204	2/11	0.1 - 5.2
NA	NA	NA	NA	NA	NA	55722-27-5	TOTAL TCDF	1.7		292	J	NG/KG	13SB040204	5/11	0.09 - 1.3
							Miscellaneous Parameters								
NA	NA	NA	NA	NA	NA	TTNUS014	CATION EXCHANGE CAPACITY	13		14		MEQ/1	13SB070810	2/2	NA
NA	NA	NA	NA	NA	NA	TTNUS002	PH	5.3		5.8		S.U.	13SB080608	2/2	NA
NA	NA	NA	NA	NA	NA	TTNUS003	TOTAL ORGANIC CARBON	1100	J	1100	J	MG/KG	13SB070810	1/2	1000 - 1000

Associated Samples:

13SB010204
13SB020204
13SB030204
13SB040204
13SB050204
13SB060204
13SB070810
13SB080608
13SB090204
13SB100204
13SB110204
13SB120204
13SB130204
13SB150204
13SB160204
13SB170204
13SB180204
13SB190203
13SB210204
13SB220204
13SB230204
13SB240203
13SB250204

SWMU 13
SEDIMENT – ROUND 1

APPENDIX B
FREQUENCY OF DETECTION TABLES
SEDIMENT - ROUND 1
SWMU 13 - MINE FILL B
NSWC CRANE, INDIANA

IDCLRESD	R9SORES	R5DQLSD	CAS Number	Chemical	Minimum Concentration	Minimum Qualifier	Maximum Concentration	Maximum Qualifier	Units	Sample Containing Maximum Concentration	Detection Frequency	Range of Nondetects
				Semivolatiles								
9500000	3700000	6.71	83-32-9	ACENAPHTHENE	24		43	J	UG/KG	13SD050004	2/3	4.1
47000000	22000000	46.9	120-12-7	ANTHRACENE	72		88		UG/KG	13SD050004	2/3	4.1
5100	620	31.7	56-55-3	BENZO(A)ANTHRACENE	11		330		UG/KG	13SD050004	3/3	NA
510	62	31.9	50-32-8	BENZO(A)PYRENE	15		390	J	UG/KG	13SD060004	3/3	NA
5100	620	10400	205-99-2	BENZO(B)FLUORANTHENE	18		460	J	UG/KG	13SD060004	3/3	NA
NA	2300000	170	191-24-2	BENZO(G,H,I)PERYLENE	10		380	J	UG/KG	13SD060004	3/3	NA
51000	6200	240	207-08-9	BENZO(K)FLUORANTHENE	10		250	J	UG/KG	13SD050004	3/3	NA
510000	62000	57.1	218-01-9	CHRYSENE	18		430	J	UG/KG	13SD060004	3/3	NA
18000000	6100000	110.5	84-74-2	DI-N-BUTYL PHTHALATE	86	J	86	J	UG/KG	13SD060004	1/3	83 - 87
3700000	2400000	40600	117-84-0	DI-N-OCTYL PHTHALATE	100	J	100	J	UG/KG	13SD060004	1/3	83 - 87
510	62	6.22	53-70-3	DIBENZO(A,H)ANTHRACENE	66	J	74	J	UG/KG	13SD060004	2/3	4.1
6300000	2300000	111.3	206-44-0	FLUORANTHENE	44		860		UG/KG	13SD050004	3/3	NA
6300000	2600000	21.2	86-73-7	FLUORENE	33		42	J	UG/KG	13SD050004	2/3	4.1
5100	620	200	193-39-5	INDENO(1,2,3-CD)PYRENE	8	J	290	J	UG/KG	13SD060004	3/3	NA
3200000	56000	34.6	91-20-3	NAPHTHALENE	6	J	6	J	UG/KG	13SD050004	2/3	4.1
3200000	56000	34.6	91-20-3	NAPHTHALENE	6	J	6	J	UG/KG	13SD060004	2/3	4.1
NA	2300000	41.9	85-01-8	PHENANTHRENE	27		620		UG/KG	13SD060004	3/3	NA
5500000	2300000	53	129-00-0	PYRENE	36		1300	J	UG/KG	13SD060004	3/3	NA
				Explosives								
NA	3100	NA	2691-41-0	HMX	0.8	J	1.9	J	MG/KG	13SD110004	2/23	0.25
NA	4.4	NA	121-82-4	RDX	0.44	J	2.2		MG/KG	13SD110004	3/23	0.25
				Herbicides								
20000	3000	30100	87-86-5	PENTACHLOROPHENOL	2.1	J	2.1	J	UG/KG	13SD060004	1/3	0.56 - 0.58
				Inorganics								
NA	76000	NA	7429-90-5	ALUMINUM	1480		18500		MG/KG	13SD220004	23/23	NA
140	31	NA	7440-36-0	ANTIMONY	0.8	J	1.8	J	MG/KG	13SD010004	3/23	0.13 - 0.55
3.9	0.39	5.9	7440-38-2	ARSENIC	3.7	J	35.6	J	MG/KG	13SD220004	22/23	0.53
24000	5400	NA	7440-39-3	BARIUM	28.5	J	364	J	MG/KG	13SD010004	23/23	NA
680	150	NA	7440-41-7	BERYLLIUM	0.53	J	4.3	J	MG/KG	13SD220004	20/23	0.18 - 0.52
12	37	0.596	7440-43-9	CADMIUM	0.41	J	4.1	J	MG/KG	13SD130004	13/23	0.17 - 0.45
NA	NA	NA	7440-70-2	CALCIUM	767	J	89700	J	MG/KG	13SD130004	23/23	NA
NA	30	26	7440-47-3	CHROMIUM	7.9	J	156	J	MG/KG	13SD010004	23/23	NA
NA	900	50	7440-48-4	COBALT	1.8	J	107	J	MG/KG	13SD190004	23/23	NA
13000	3100	16	7440-50-8	COPPER	7	J	52.1	J	MG/KG	13SD010004	23/23	NA
NA	23000	NA	7439-89-6	IRON	1990	J	171000	J	MG/KG	13SD220004	23/23	NA
400	400	31	7439-92-1	LEAD	4.2	J	471	J	MG/KG	13SD010004	23/23	NA
NA	1600	NA	7439-93-2	LITHIUM	2.1	J	38.8	J	MG/KG	13SD190004	23/23	NA
NA	NA	NA	7439-95-4	MAGNESIUM	292	J	7540	J	MG/KG	13SD070004	23/23	NA
NA	1800	NA	7439-96-5	MANGANESE	65.3	J	6130	J	MG/KG	13SD120004	23/23	NA
55	23	0.174	7439-97-6	MERCURY	0.013	J	0.16	J	MG/KG	13SD010004	14/23	0.01 - 0.044
6900	1600	16	7440-02-0	NICKEL	7.9	J	83.9	J	MG/KG	13SD220004	23/23	NA

APPENDIX B
FREQUENCY OF DETECTION TABLES
SEDIMENT - ROUND 1
SWMU 13 - MINE FILL B
NSWC CRANE, INDIANA

IDCLRESD	R9SORES	R5DQLSD	CAS Number	Chemical	Minimum Concentration	Minimum Qualifier	Maximum Concentration	Maximum Qualifier	Units	Sample Containing Maximum Concentration	Detection Frequency	Range of Nondetects
NA	NA	NA	7440-09-7	POTASSIUM	252	J	2390	J	MG/KG	13SD150004	23/23	NA
1700	390	NA	7782-49-2	SELENIUM	0.18	J	0.69	J	MG/KG	13SD220004	16/23	0.02 - 0.33
NA	NA	NA	7440-23-5	SODIUM	81.3	J	334	J	MG/KG	13SD070004	3/23	22.6 - 126
NA	47000	NA	7440-24-6	STRONTIUM	4.1	J	77.1	J	MG/KG	13SD110004	23/23	NA
NA	47000	NA	7440-31-5	TIN	0.52	J	12	J	MG/KG	13SD120004	8/23	0.31 - 0.64
NA	NA	NA	7440-32-6	TITANIUM	13.8	J	112	J	MG/KG	13SD220004	23/23	NA
NA	550	NA	7440-62-2	VANADIUM	11.8	J	115	J	MG/KG	13SD220004	23/23	NA
100000	23000	120	7440-66-6	ZINC	7.9	J	541	J	MG/KG	13SD010004	18/23	33.4 - 386
				AVS/SEM								
NA	NA	NA	TTNUS010	ACID VOLATILE SULFIDE	0.23	J	0.88	J	UMO/G	13SD050004	7/7	NA
NA	NA	NA	7440-43-9	CADMIUM	0.002		0.004		UMO/G	13SD080004	2/7	0.001 - 0.002
NA	NA	NA	7440-50-8	COPPER	0.036	J	2.223	J	UMO/G	13SD080004	7/7	NA
NA	NA	NA	7439-92-1	LEAD	0.03	J	0.067	J	UMO/G	13SD020004	6/7	0.006
NA	NA	NA	7439-97-6	MERCURY	0.00004	J	0.00054	J	UMO/G	13SD140004	5/7	0.0000 - 0.0000
NA	NA	NA	7440-02-0	NICKEL	0.02		0.111		UMO/G	13SD050004	7/7	NA
NA	NA	NA	TTNUS305	SEM/AVS	0.09		3.74		S.U.	13SD080004	7/7	NA
NA	NA	NA	7440-66-6	ZINC	0.407	J	0.538	J	UMO/G	13SD110004	3/7	0.031 - 0.426
				Miscellaneous Parameters								
NA	NA	NA	TTNUS014	CATION EXCHANGE CAPACITY	9.9		18		MEQ/1	13SD110004	7/7	NA
NA	NA	NA	TTNUS002	PH	5		7.9		S.U.	13SD110004	7/7	NA
NA	NA	NA	TTNUS003	TOTAL ORGANIC CARBON	2500	J	19000	J	MG/KG	13SD050004	7/7	NA

Associated Samples:

13SD010004	13SD130004
13SD020004	13SD140004
13SD030004	13SD150004
13SD040004	13SD160004
13SD050004	13SD170004
13SD060004	13SD180004
13SD070004	13SD190004
13SD080004	13SD200004
13SD090004	13SD210004
13SD100004	13SD220004
13SD110004	13SD230004
13SD120004	

SWMU 13
SEDIMENT – ROUND 2

APPENDIX B
FREQUENCY OF DETECTION TABLES
SEDIMENT - ROUND 2
SWMU 13 - MINE FILL B
NSWC CRANE, INDIANA

idclresd	r9sores	r5dqlsd	CAS Number	Chemical	Minimum Concentration	Minimum Qualifier	Maximum Concentration	Maximum Qualifier	Units	Sample Containing Maximum Concentration	Detection Frequency	Range of Nondetects
				Semivolatile Organic Compounds								
3700000	56000	20.2	91-57-6	2-METHYLNAPHTHALENE	6	J	6	J	UG/KG	13SD250004	1/5	3.9 - 4.4
9500000	3700000	6.71	83-32-9	ACENAPHTHENE	24		43	J	UG/KG	13SD050004	2/5	4.1 - 4.4
47000000	22000000	46.9	120-12-7	ANTHRACENE	72		88		UG/KG	13SD050004	2/5	4.1 - 4.4
5100	620	31.7	56-55-3	BENZO(A)ANTHRACENE	10		330		UG/KG	13SD050004	5/5	NA
510	62	31.9	50-32-8	BENZO(A)PYRENE	12		390	J	UG/KG	13SD060004	5/5	NA
5100	620	10400	205-99-2	BENZO(B)FLUORANTHENE	18		460	J	UG/KG	13SD060004	5/5	NA
NA	2300000	170	191-24-2	BENZO(G,H,I)PERYLENE	10		380	J	UG/KG	13SD060004	5/5	NA
51000	6200	240	207-08-9	BENZO(K)FLUORANTHENE	7	J	250	J	UG/KG	13SD050004	5/5	NA
510000	62000	57.1	218-01-9	CHRYSENE	15		430	J	UG/KG	13SD060004	5/5	NA
18000000	6100000	110.5	84-74-2	DI-N-BUTYL PHTHALATE	86	J	86	J	UG/KG	13SD060004	1/3	83 - 87
3700000	2400000	40600	117-84-0	DI-N-OCTYL PHTHALATE	100	J	100	J	UG/KG	13SD060004	1/3	83 - 87
510	62	6.22	53-70-3	DIBENZO(A,H)ANTHRACENE	66	J	74	J	UG/KG	13SD060004	2/5	4.1 - 4.4
6300000	2300000.	111.3	206-44-0	FLUORANTHENE	29		860		UG/KG	13SD050004	5/5	NA
6300000	2600000	21.2	86-73-7	FLUORENE	33		42	J	UG/KG	13SD050004	2/5	4.1 - 4.4
5100	620	200	193-39-5	INDENO(1,2,3-CD)PYRENE	8	J	290	J	UG/KG	13SD060004	5/5	NA
3200000	56000	34.6	91-20-3	NAPHTHALENE	6	J	6	J	UG/KG	13SD060004	2/5	4.1 - 4.4
3200000	56000	34.6	91-20-3	NAPHTHALENE	6	J	6	J	UG/KG	13SD050004	2/5	4.1 - 4.4
NA	2300000	41.9	85-01-8	PHENANTHRENE	17		620		UG/KG	13SD060004	5/5	NA
5500000	2300000	53	129-00-0	PYRENE	25		1300	J	UG/KG	13SD060004	5/5	NA
				Herbicides								
20000	3000	30100	87-86-5	PENTACHLOROPHENOL	2.1	J	2.1	J	UG/KG	13SD060004	1/3	0.56 - 0.58
				Explosives								
NA	3100	NA	2691-41-0	HMX	0.28	J	1.9	J	MG/KG	13SD110004	3/31	0.25 - 0.25
NA	4.4	NA	121-82-4	RDX	0.44	J	2.2		MG/KG	13SD110004	3/31	0.25 - 0.25
				Inorganics								
NA	76000	NA	7429-90-5	ALUMINUM	1480		18500		MG/KG	13SD220004	31/31	NA
140	31	NA	7440-36-0	ANTIMONY	0.8	J	4.7	J	MG/KG	13SD300004	11/31	0.13 - 0.55
3.9	0.39	5.9	7440-38-2	ARSENIC	3.7	J	58.2	J	MG/KG	13SD240004	30/31	0.53 - 0.53
24000	5400.	NA	7440-39-3	BARIUM	28.5	J	364	J	MG/KG	13SD010004	31/31	NA
680	150	NA	7440-41-7	BERYLLIUM	0.53	J	4.3	J	MG/KG	13SD220004	28/31	0.18 - 0.52
12	37	0.596	7440-43-9	CADMIUM	0.41	J	17.1	J	MG/KG	13SD300004	21/31	0.17 - 0.45
NA	NA	NA	7440-70-2	CALCIUM	766	J	89700	J	MG/KG	13SD130004	31/31	NA
NA	30	26	7440-47-3	CHROMIUM	7.9	J	228	J	MG/KG	13SD240004	31/31	NA

APPENDIX B
FREQUENCY OF DETECTION TABLES
SEDIMENT - ROUND 2
SWMU 13 - MINE FILL B
NSWC CRANE, INDIANA

idclresd	r9sores	r5dqlsd	CAS Number	Chemical	Minimum Concentration	Minimum Qualifier	Maximum Concentration	Maximum Qualifier	Units	Sample Containing Maximum Concentration	Detection Frequency	Range of Nondetects
NA	900	50	7440-48-4	COBALT	1.8	J	107	J	MG/KG	13SD190004	31/31	NA
13000	3100	16	7440-50-8	COPPER	7	J	52.1	J	MG/KG	13SD010004	31/31	NA
NA	23000	NA	7439-89-6	IRON	1990	J	299000	J	MG/KG	13SD300004	31/31	NA
400	400	31	7439-92-1	LEAD	4.2	J	471	J	MG/KG	13SD010004	31/31	NA
NA	1600	NA	7439-93-2	LITHIUM	2.1	J	38.8	J	MG/KG	13SD190004	23/23	NA
NA	NA	NA	7439-95-4	MAGNESIUM	292	J	7540	J	MG/KG	13SD070004	31/31	NA
NA	1800	NA	7439-96-5	MANGANESE	65.3	J	6130	J	MG/KG	13SD120004	31/31	NA
55	23	0.174	7439-97-6	MERCURY	0.013	J	0.16	J	MG/KG	13SD010004	22/31	0.01 - 0.044
6900	1600	16	7440-02-0	NICKEL	7.9	J	83.9	J	MG/KG	13SD220004	31/31	NA
NA	NA	NA	7440-09-7	POTASSIUM	252	J	2390	J	MG/KG	13SD150004	31/31	NA
1700	390	NA	7782-49-2	SELENIUM	0.18	J	1.1	J	MG/KG	13SD240004	24/31	0.02 - 0.33
NA	NA	NA	7440-23-5	SODIUM	31.6	J	334	J	MG/KG	13SD070004	7/31	21.8 - 126
NA	47000	NA	7440-24-6	STRONTIUM	4.1	J	77.1	J	MG/KG	13SD110004	23/23	NA
NA	47000	NA	7440-31-5	TIN	0.52	J	12	J	MG/KG	13SD120004	8/31	0.3 - 0.64
NA	NA	NA	7440-32-6	TITANIUM	13.8	J	164	J	MG/KG	13SD240004	31/31	NA
NA	550	NA	7440-62-2	VANADIUM	11.8	J	144	J	MG/KG	13SD240004	31/31	NA
100000	23000	120	7440-66-6	ZINC	7.9	J	541	J	MG/KG	13SD010004	26/31	33.4 - 386
				AVS/SEM								
NA	NA	NA	TTNUS010	ACID VOLATILE SULFIDE	0.23	J	0.88	J	UMO/G	13SD050004	7/7	NA
NA	NA	NA	7440-43-9	CADMIUM	0.002		0.004		UMO/G	13SD080004	2/7	0.001 - 0.002
NA	NA	NA	7440-50-8	COPPER	0.036	J	2.223	J	UMO/G	13SD080004	7/7	NA
NA	NA	NA	7439-92-1	LEAD	0.03	J	0.067	J	UMO/G	13SD020004	6/7	0.006 - 0.006
NA	NA	NA	7439-97-6	MERCURY	0.00004	J	0.00054	J	UMO/G	13SD140004	5/7	0.00003 - 0.00004
NA	NA	NA	7440-02-0	NICKEL	0.02		0.111		UMO/G	13SD050004	7/7	NA
NA	NA	NA	TTNUS305	SEM/AVS	0.09		3.74		S.U.	13SD080004	7/7	NA
NA	NA	NA	7440-66-6	ZINC	0.407	J	0.538	J	UMO/G	13SD110004	3/7	0.031 - 0.426
				Miscellaneous Parameters								
NA	NA	NA	TTNUS014	CATION EXCHANGE CAPACITY	9.9		18		MEQ/1	13SD110004	7/7	NA
NA	NA	NA	TTNUS002	PH	5		7.9		S.U.	13SD110004	7/7	NA
NA	NA	NA	TTNUS003	TOTAL ORGANIC CARBON	2500	J	19000	J	MG/KG	13SD050004	7/7	NA

Associated Samples:

13SD010004	13SD120004	13SD230004
13SD020004	13SD130004	13SD240004

APPENDIX B
FREQUENCY OF DETECTION TABLES
SEDIMENT - ROUND 2
SWMU 13 - MINE FILL B
NSWC CRANE, INDIANA

idclresd	r9sores	r5dqlsd	CAS Number	Chemical	Minimum Concentration	Minimum Qualifier	Maximum Concentration	Maximum Qualifier	Units	Sample Containing Maximum Concentration	Detection Frequency	Range of Nondetects
				13SD030004	13SD140004		13SD250004					
				13SD040004	13SD150004		13SD260004					
				13SD050004	13SD160004		13SD270004					
				13SD060004	13SD170004		13SD280004					
				13SD070004	13SD180004		13SD290004					
				13SD080004	13SD190004		13SD300004					
				13SD090004	13SD200004		13SD310004					
				13SD100004	13SD210004		13SD320004					
				13SD110004	13SD220004							

SWMU 13
SURFACE WATER – ROUND 1

APPENDIX B
FREQUENCY OF DETECTION TABLES
SURFACE WATER - ROUND 1
SWMU 13 - MINE FILL B
NSWC CRANE, INDIANA

FEDMCL	FEDSMCL	IDCLRGDF	R9TAPW	R5DQLSW	CAS Number	Chemical	Minimum Concentration	Minimum Qualifier	Maximum Concentration	Maximum Qualifier	Units	Sample Containing Maximum Concentration	Detection Frequency	Range of Nondetects
						Semivolatile Organics								
NA	NA	1.2	0.092	0.839	56-55-3	BENZO(A)ANTHRACENE	0.22		0.22		UG/L	13SW0601	1/3	0.05
0.2	NA	0.2	0.0092	0.014	50-32-8	BENZO(A)PYRENE	0.26		0.26		UG/L	13SW0601	1/3	0.05
NA	NA	1.2	0.092	9.07	205-99-2	BENZO(B)FLUORANTHENE	0.38		0.38		UG/L	13SW0601	1/3	0.05
NA	NA	NA	180	7.64	191-24-2	BENZO(G,H,I)PERYLENE	0.23		0.23		UG/L	13SW0601	1/3	0.05
NA	NA	0.8	0.92	0.0056	207-08-9	BENZO(K)FLUORANTHENE	0.2		0.2		UG/L	13SW0601	1/3	0.05
NA	NA	1.6	9.2	0.033	218-01-9	CHRYSENE	0.35		0.35		UG/L	13SW0601	1/3	0.05
NA	NA	210	1500	8.1	206-44-0	FLUORANTHENE	0.96		0.96		UG/L	13SW0601	1/3	0.05
NA	NA	0.022	0.092	4.31	193-39-5	INDENO(1,2,3-CD)PYRENE	0.2		0.2		UG/L	13SW0601	1/3	0.05
NA	NA	NA	180	2.1	85-01-8	PHENANTHRENE	0.51		0.51		UG/L	13SW0601	1/3	0.05
NA	NA	140	180	0.3	129-00-0	PYRENE	0.65		0.65		UG/L	13SW0601	1/3	0.05
						Explosives								
NA	NA	NA	2.2	NA	118-96-7	2,4,6-TRINITROTOLUENE	0.53	J	6.8		UG/L	13SW1301	4/13	0.21 - 0.65
NA	NA	NA	NA	NA	35572-78-2	2-AMINO-4,6-DINITROTOLUENE	0.53	J	1.6	J	UG/L	13SW1301	3/12	0.265 - 0.65
NA	NA	NA	NA	NA	19406-51-0	4-AMINO-2,6-DINITROTOLUENE	0.52	J	3.8	J	UG/L	13SW1301	5/13	0.265 - 0.65
NA	NA	NA	1800	NA	2691-41-0	HMX	1.2		93		UG/L	13SW1101	8/13	0.265 - 0.65
NA	NA	NA	0.61	NA	121-82-4	RDX	0.29	J	610		UG/L	13SW1101	10/13	0.25 - 0.6
						Herbicides								
1	NA	1	0.56	5.23	87-86-5	PENTACHLOROPHENOL	0.025	J	0.091		UG/L	13SW0401	2/3	0.013
						Total Inorganics								
10	NA	50	0.045	53	7440-38-2	ARSENIC	1.2	J	35.7	J	UG/L	13SW1101	7/13	0.51 - 0.97
2000	NA	2000	2600	5000	7440-39-3	BARIUM	25.3	J	247	J	UG/L	13SW0701	13/13	NA
NA	NA	NA	NA	NA	7440-70-2	CALCIUM	18900	J	133000	J	UG/L	13SW0701	13/13	NA
100	NA	NA	110	42	7440-47-3	CHROMIUM	1.2	J	20.5	J	UG/L	13SW0701	11/13	0.98 - 1
NA	NA	NA	730	5	7440-48-4	COBALT	1.2	J	9.4	J	UG/L	13SW1101	9/13	0.16 - 0.72
15	NA	15	NA	1.3	7439-92-1	LEAD	1.3	J	29.9	J	UG/L	13SW0701	9/13	0.77 - 1.2
NA	NA	NA	730	NA	7439-93-2	LITHIUM	2.8	J	14.3	J	UG/L	13SW0701	8/13	1.3 - 2.2
NA	NA	NA	NA	NA	7439-95-4	MAGNESIUM	3600	J	92200	J	UG/L	13SW1101	13/13	NA
NA	50	NA	880	NA	7439-96-5	MANGANESE	8.2	J	231	J	UG/L	13SW1001	13/13	NA
NA	NA	NA	NA	NA	7440-09-7	POTASSIUM	855	J	690000	J	UG/L	13SW1101	13/13	NA
50	NA	50	180	5	7782-49-2	SELENIUM	2	J	2	J	UG/L	13SW1101	1/13	0.1 - 0.55
NA	NA	NA	NA	NA	7440-23-5	SODIUM	2960	J	325000	J	UG/L	13SW0701	13/13	NA
NA	NA	NA	22000	NA	7440-24-6	STRONTIUM	48	J	245	J	UG/L	13SW0701	13/13	NA
						Dissolved Inorganics								
NA	50	NA	36000	NA	7429-90-5	ALUMINUM	52.7	J	822		UG/L	13SW0901-F	12/13	24.8
10	NA	50	0.045	53	7440-38-2	ARSENIC	3.6	J	35.3	J	UG/L	13SW1101-F	2/13	0.15 - 0.73
2000	NA	2000	2600	5000	7440-39-3	BARIUM	10.1	J	149	J	UG/L	13SW0701-F	13/13	NA
NA	NA	NA	NA	NA	7440-70-2	CALCIUM	5660	J	121000	J	UG/L	13SW0701-F	13/13	NA
100	NA	NA	110	42	7440-47-3	CHROMIUM	2	J	2	J	UG/L	13SW1101-F	1/13	0.21 - 0.89
NA	NA	NA	730	5	7440-48-4	COBALT	1.3	J	8.8	J	UG/L	13SW1101-F	5/13	0.26 - 0.7
1300	1000	1300	1500	5	7440-50-8	COPPER	1.9	J	26.4	J	UG/L	13SW1101-F	11/13	1 - 1.2
NA	300	NA	11000	NA	7439-89-6	IRON	35.7	J	750	J	UG/L	13SW0901-F	11/13	14.9 - 26.9

APPENDIX B
FREQUENCY OF DETECTION TABLES
SURFACE WATER - ROUND 1
SWMU 13 - MINE FILL B
NSWC CRANE, INDIANA

FEDMCL	FEDSMCL	IDCLRGDF	R9TAPW	R5DQLSW	CAS Number	Chemical	Minimum Concentration	Minimum Qualifier	Maximum Concentration	Maximum Qualifier	Units	Sample Containing Maximum Concentration	Detection Frequency	Range of Nondetects
NA	NA	NA	730	NA	7439-93-2	LITHIUM	3.1	J	5.5	J	UG/L	13SW1001-F	3/13	0.37 - 1.5
NA	NA	NA	NA	NA	7439-95-4	MAGNESIUM	3440	J	92900	J	UG/L	13SW1101-F	13/13	NA
NA	50	NA	880	NA	7439-96-5	MANGANESE	2.9	J	160	J	UG/L	13SW1001-F	13/13	NA
NA	NA	730	730	29	7440-02-0	NICKEL	1.1	J	18.6	J	UG/L	13SW1101-F	10/13	0.59 - 0.85
NA	NA	NA	NA	NA	7440-09-7	POTASSIUM	735	J	700000	J	UG/L	13SW1101-F	13/13	NA
50	NA	50	180	5	7782-49-2	SELENIUM	2.2	J	2.2	J	UG/L	13SW1101-F	1/13	0.08 - 0.59
NA	NA	NA	NA	NA	7440-23-5	SODIUM	2920	J	311000	J	UG/L	13SW0701-F	13/13	NA
NA	NA	NA	22000	NA	7440-24-6	STRONTIUM	45.5	J	219	J	UG/L	13SW0701-F	13/13	NA
NA	NA	NA	NA	NA	7440-32-6	TITANIUM	1.4	J	19.5	J	UG/L	13SW0901-F	11/13	1.1
NA	NA	NA	260	19	7440-62-2	VANADIUM	1.6	J	38.5	J	UG/L	13SW1101-F	3/13	0.23 - 0.73
NA	5000	11000	11000	58.9	7440-66-6	ZINC	3.4	J	30.6	J	UG/L	13SW1101-F	10/13	3.8 - 5.7
						Miscellaneous Parameters								
NA	NA	NA	NA	NA	TTNUS493	AMMONIA-N	0.01	J	3.4		MG/L	13SW1101	10/13	0.01
NA	NA	NA	NA	NA	TTNUS494	NITRITE/NITRATE-N	0.15	J	23		MG/L	13SW1101	9/13	0.02
						Field Parameters								
NA	NA	NA	NA	NA	TTNUS034	DISSOLVED OXYGEN	4.35		12.32		MG/L	13SW1301	13/13	NA
NA	NA	NA	NA	NA	TTNUS033	OXIDATION REDUCTION POTENTIAL	95		640		MV	13SW0601	13/13	NA
NA	0	NA	NA	NA	TTNUS002	PH	6.13		8.48		S.U.	13SW0901	13/13	NA
NA	NA	NA	NA	NA	TTNUS038	SPECIFIC CONDUCTANCE	0.138		2.743		MS/CM	13SW1101	13/13	NA
NA	NA	NA	NA	NA	TTNUS047	TEMPERATURE	6.52		16.45		C	13SW1101	13/13	NA
NA	NA	NA	NA	NA	TTNUS023	TURBIDITY	11		352		NTU	13SW0701	12/12	NA

Associated Samples:

13SW0101	13SW0701-F
13SW0101-F	13SW0801
13SW0201	13SW0801-F
13SW0201-F	13SW0901
13SW0301	13SW0901-F
13SW0301-F	13SW1001
13SW0401	13SW1001-F
13SW0401-F	13SW1101
13SW0501	13SW1101-F
13SW0501-F	13SW1201
13SW0601	13SW1201-F
13SW0601-F	13SW1301
13SW0701	13SW1301-F

SWMU 13
SURFACE WATER – ROUND 2

APPENDIX B
FREQUENCY OF DETECTION TABLES
SURFACE WATER - ROUND 2
SWMU 13 - MINE FILL B
NSWC CRANE, INDIANA

CAS Number	Chemical	Minimum Concentration	Minimum Qualifier	Maximum Concentration	Maximum Qualifier	Units	Sample Containing Maximum Concentration	Detection Frequency	Range of Nondetects
	Semivolatile Organic Compounds								
56-55-3	BENZO(A)ANTHRACENE	0.2	J	0.2	J	UG/L	13SW3201	1/2	0.049 - 0.049
50-32-8	BENZO(A)PYRENE	0.27	J	0.27	J	UG/L	13SW3201	1/2	0.049 - 0.049
205-99-2	BENZO(B)FLUORANTHENE	0.4	J	0.4	J	UG/L	13SW3201	1/2	0.049 - 0.049
191-24-2	BENZO(G,H,I)PERYLENE	0.22	J	0.22	J	UG/L	13SW3201	1/2	0.049 - 0.049
207-08-9	BENZO(K)FLUORANTHENE	0.19	J	0.19	J	UG/L	13SW3201	1/2	0.049 - 0.049
218-01-9	CHRYSENE	0.33	J	0.33	J	UG/L	13SW3201	1/2	0.049 - 0.049
206-44-0	FLUORANTHENE	0.77	J	0.77	J	UG/L	13SW3201	1/2	0.049 - 0.049
193-39-5	INDENO(1,2,3-CD)PYRENE	0.21	J	0.21	J	UG/L	13SW3201	1/2	0.049 - 0.049
85-01-8	PHENANTHRENE	0.32	J	0.32	J	UG/L	13SW3201	1/2	0.049 - 0.049
129-00-0	PYRENE	0.58	J	0.58	J	UG/L	13SW3201	1/2	0.049 - 0.049
	Explosives								
59229-75-3	2,6-DIAMINO-4-NITROTOLUENE	0.44	J	0.44	J	UG/L	13SW1302	1/21	0.24 - 0.287
35572-78-2	2-AMINO-4,6-DINITROTOLUENE	0.52	J	8.3	J	UG/L	13SW1302	5/21	0.24 - 0.27
99-08-1	3-NITROTOLUENE	0.29	J	0.31	J	UG/L	13SW1302	2/21	0.24 - 0.287
19406-51-0	4-AMINO-2,6-DINITROTOLUENE	0.46	J	21	J	UG/L	13SW1302	6/21	0.24 - 0.27
TTNUS498	DNX	0.59	J	35		UG/L	13SW1102	8/21	0.24 - 0.27
2691-41-0	HMX	0.67		730		UG/L	13SW1102	11/21	0.24 - 0.27
TTNUS232	MNX	0.28	J	72		UG/L	13SW1102	8/21	0.24 - 0.27
121-82-4	RDX	0.35	J	5500		UG/L	13SW1102	13/21	0.24 - 0.27
TTNUS337	TNX	0.48	J	4		UG/L	13SW1501	6/21	0.24 - 0.27
TTNUS337	TNX	0.48	J	4		UG/L	13SW1102	6/21	0.24 - 0.27
	Total Inorganics								
7429-90-5	ALUMINUM	108	J	7250	J	UG/L	13SW1102	14/21	30.6 - 106
7440-38-2	ARSENIC	0.85	J	8.4	J	UG/L	13SW1102	7/21	0.11 - 0.48
7440-39-3	BARIUM	47.3	J	101	J	UG/L	13SW1601	21/21	NA
7440-70-2	CALCIUM	3040	J	82600	J	UG/L	13SW0902	21/21	NA
7440-47-3	CHROMIUM	0.82	J	8.2	J	UG/L	13SW1601	5/21	0.19 - 1
7440-48-4	COBALT	0.47	J	9	J	UG/L	13SW1501	8/21	0.07 - 0.52

APPENDIX B
FREQUENCY OF DETECTION TABLES
SURFACE WATER - ROUND 2
SWMU 13 - MINE FILL B
NSWC CRANE, INDIANA

CAS Number	Chemical	Minimum Concentration	Minimum Qualifier	Maximum Concentration	Maximum Qualifier	Units	Sample Containing Maximum Concentration	Detection Frequency	Range of Nondetects
7440-50-8	COPPER	0.89	J	18	J	UG/L	13SW1501	18/21	0.38 - 0.89
7439-89-6	IRON	152	J	6220	J	UG/L	13SW1501	13/21	24.5 - 162
7439-92-1	LEAD	1.8	J	9.7	J	UG/L	13SW1501	4/21	0.07 - 1.6
7439-95-4	MAGNESIUM	836	J	15600	J	UG/L	13SW1901	20/21	14200 - 14200
7439-96-5	MANGANESE	7.5	J	3190	J	UG/L	13SW0802	20/21	2 - 2
7439-97-6	MERCURY	0.047	J	0.047	J	UG/L	13SW1501	1/21	0.007 - 0.02
7440-02-0	NICKEL	0.45	J	22	J	UG/L	13SW1501	21/21	NA
7440-09-7	POTASSIUM	621	J	126000	J	UG/L	13SW1102	21/21	NA
7440-23-5	SODIUM	1540	J	88300	J	UG/L	13SW0702	21/21	NA
7440-32-6	TITANIUM	0.31	J	96.9	J	UG/L	13SW1102	20/21	0.73 - 0.73
7440-62-2	VANADIUM	0.42	J	16.6	J	UG/L	13SW1102	11/21	0.11 - 0.61
7440-66-6	ZINC	6.8	J	68.9	J	UG/L	13SW0902	12/21	2.1 - 13.1
	Dissolved Inorganics								
7429-90-5	ALUMINUM	134	J	283	J	UG/L	13SW1102-F	6/21	7.6 - 52.8
7440-38-2	ARSENIC	0.64	J	6.7	J	UG/L	13SW1102-F	6/21	0.09 - 0.42
7440-39-3	BARIUM	22	J	95.3	J	UG/L	13SW0802-F	21/21	NA
7440-70-2	CALCIUM	6680	J	81400	J	UG/L	13SW0902-F	21/21	NA
7440-48-4	COBALT	0.6	J	6.5	J	UG/L	13SW1002-F	18/21	0.21 - 0.52
7440-50-8	COPPER	0.57	J	8.3	J	UG/L	13SW1102-F	17/21	0.3 - 0.93
7439-89-6	IRON	137	J	1120	J	UG/L	13SW0802-F	5/21	5.7 - 122
7439-95-4	MAGNESIUM	3770	J	15400	J	UG/L	13SW1901-F	20/21	13700 - 13700
7439-96-5	MANGANESE	4	J	3110	J	UG/L	13SW0802-F	19/21	2.1 - 10.7
7440-02-0	NICKEL	0.7	J	6.2		UG/L	13SW1302-F	20/21	0.55 - 0.55
7440-09-7	POTASSIUM	600	J	125000	J	UG/L	13SW1102-F	21/21	NA
7440-23-5	SODIUM	1660	J	106000	J	UG/L	13SW0702-F	21/21	NA
7440-32-6	TITANIUM	0.1	J	8.7	J	UG/L	13SW1102-F	18/21	0.34 - 1
7440-62-2	VANADIUM	0.44	J	6	J	UG/L	13SW1102-F	6/21	0.06 - 0.4
7440-66-6	ZINC	6.6	J	54.5	J	UG/L	13SW0902-F	8/21	1.7 - 16
	Miscellaneous Parameters								

APPENDIX B
FREQUENCY OF DETECTION TABLES
SURFACE WATER - ROUND 2
SWMU 13 - MINE FILL B
NSWC CRANE, INDIANA

CAS Number	Chemical	Minimum Concentration	Minimum Qualifier	Maximum Concentration	Maximum Qualifier	Units	Sample Containing Maximum Concentration	Detection Frequency	Range of Nondetects
TTNUS493	AMMONIA-N	0.01		0.4	J	MG/L	13SW0802	8/21	0.005 - 0.01
TTNUS494	NITRITE/NITRATE-N	0.14		200		MG/L	13SW2401	12/21	0.025 - 0.13
	Field Parameters								
TTNUS186	DISSOLVED OXYGEN - METER	2.19		10.59		MG/L	13SW1501	22/22	NA
TTNUS033	OXIDATION REDUCTION POTENTIAL	-23.7		341.3		MV	13SW2601	22/22	NA
TTNUS002	PH	6.17		7.88		S.U.	13SW3101	22/22	NA
TTNUS038	SPECIFIC CONDUCTANCE	0.073		1.024		MS/CM	13SW1102	22/22	NA
TTNUS047	TEMPERATURE	8.84		15.2		C	13SW1102	22/22	NA
TTNUS023	TURBIDITY	0		242		NTU	13SW1102	22/22	NA

SMWU 13
SEEPS – ROUND 2

APPENDIX B
FREQUENCY OF DETECTION TABLES
SEEPS - ROUND 2
SWMU 13 - MINE FILL B
NSWC CRANE, INDIANA

CAS Number	Chemical	Minimum Concentration	Minimum Qualifier	Maximum Concentration	Maximum Qualifier	Units	Sample Containing Maximum Concentration	Detection Frequency	Range of Nondetects
	Explosives								
99-35-4	1,3,5-TRINITROBENZENE	0.47		0.47		UG/L	13SP0301	1/4	0.25 - 0.26
35572-78-2	2-AMINO-4,6-DINITROTOLUENE	1.1	J	1.1	J	UG/L	13SP0201	1/4	0.24 - 0.26
99-08-1	3-NITROTOLUENE	0.35	J	0.35	J	UG/L	13SP0201	1/4	0.24 - 0.26
19406-51-0	4-AMINO-2,6-DINITROTOLUENE	2.3		2.3		UG/L	13SP0201	1/4	0.24 - 0.26
TTNUS498	DNX	2.5		3	J	UG/L	13SP0101	2/4	0.24 - 0.25
2691-41-0	HMX	9	J	20		UG/L	13SP0201	2/4	0.24 - 0.25
TTNUS232	MNX	2.2		4		UG/L	13SP0201	2/4	0.24 - 0.25
121-82-4	RDX	1.9	J	77		UG/L	13SP0201	3/4	0.24 - 0.24
TTNUS337	TNX	0.45	J	0.59		UG/L	13SP0201	2/4	0.24 - 0.25
	Total Inorganics								
7429-90-5	ALUMINUM	142	J	2670	J	UG/L	13SP0301	4/4	NA
7440-38-2	ARSENIC	0.69	J	1.3	J	UG/L	13SP0301	3/4	0.21 - 0.21
7440-39-3	BARIUM	64.4	J	114	J	UG/L	13SP0401	4/4	NA
7440-70-2	CALCIUM	29200	J	89700	J	UG/L	13SP0301	4/4	NA
7440-47-3	CHROMIUM	4	J	4	J	UG/L	13SP0301	1/4	0.47 - 1.6
7440-48-4	COBALT	0.97	J	5.8	J	UG/L	13SP0401	2/4	0.11 - 0.23
7440-50-8	COPPER	1.4	J	3.6	J	UG/L	13SP0201	4/4	NA
7439-89-6	IRON	922	J	2070	J	UG/L	13SP0301	2/4	91.4 - 143
7439-92-1	LEAD	1.4	J	1.9	J	UG/L	13SP0401	2/4	0.2 - 0.31
7439-95-4	MAGNESIUM	8910	J	11600	J	UG/L	13SP0301	3/4	8750 - 8750
7439-96-5	MANGANESE	5.8	J	3910	J	UG/L	13SP0401	4/4	NA
7440-02-0	NICKEL	1.2		8.7		UG/L	13SP0401	4/4	NA
7440-09-7	POTASSIUM	2730	J	38200	J	UG/L	13SP0201	4/4	NA
7440-23-5	SODIUM	9370	J	20000	J	UG/L	13SP0401	4/4	NA
7440-32-6	TITANIUM	1.5	J	32.4		UG/L	13SP0301	4/4	NA
7440-62-2	VANADIUM	0.98	J	5.4	J	UG/L	13SP0301	3/4	0.35 - 0.35
	Dissolved Inorganics								
7440-38-2	ARSENIC	1.1	J	1.1	J	UG/L	13SP0201-F	1/4	0.16 - 0.23

APPENDIX B
FREQUENCY OF DETECTION TABLES
SEEPS - ROUND 2
SWMU 13 - MINE FILL B
NSWC CRANE, INDIANA

CAS Number	Chemical	Minimum Concentration	Minimum Qualifier	Maximum Concentration	Maximum Qualifier	Units	Sample Containing Maximum Concentration	Detection Frequency	Range of Nondetects
7440-39-3	BARIUM	55.3	J	91.7	J	UG/L	13SP0301-F	4/4	NA
7440-70-2	CALCIUM	38900	J	87900	J	UG/L	13SP0301-F	4/4	NA
7440-48-4	COBALT	1.3	J	3.6	J	UG/L	13SP0401-F	4/4	NA
7440-50-8	COPPER	0.69	J	3.2	J	UG/L	13SP0201-F	4/4	NA
7439-95-4	MAGNESIUM	8370	J	12900	J	UG/L	13SP0301-F	4/4	NA
7439-96-5	MANGANESE	7.8	J	1090	J	UG/L	13SP0401-F	3/4	2.7 - 2.7
7440-02-0	NICKEL	0.46	J	4.8		UG/L	13SP0401-F	4/4	NA
7440-09-7	POTASSIUM	2150	J	38500	J	UG/L	13SP0201-F	4/4	NA
7440-23-5	SODIUM	11400	J	25700	J	UG/L	13SP0101-F	4/4	NA
7440-32-6	TITANIUM	0.11	J	0.94	J	UG/L	13SP0201-F	4/4	NA
7440-62-2	VANADIUM	0.57	J	0.57	J	UG/L	13SP0201-F	1/4	0.13 - 0.23
	Miscellaneous Parameters								
TTNUS493	AMMONIA-N	0.02	J	0.02	J	MG/L	13SP0301	1/4	0.005 - 0.005
TTNUS494	NITRITE/NITRATE-N	0.58	J	0.58	J	MG/L	13SP0201	1/4	0.025 - 0.06
	Field Parameters								
TTNUS186	DISSOLVED OXYGEN - METER	3.6		9.79		MG/L	13SP0201	4/4	NA
TTNUS033	OXIDATION REDUCTION POTENTIAL	202.6		283.7		MV	13SP0401	4/4	NA
TTNUS002	PH	6.44		7.7		S.U.	13SP0201	4/4	NA
TTNUS038	SPECIFIC CONDUCTANCE	0.307		0.509		MS/CM	13SP0301	4/4	NA
TTNUS047	TEMPERATURE	11.81		14.54		C	13SP0301	4/4	NA
TTNUS023	TURBIDITY	0.01		40		NTU	13SP0301	4/4	NA

Associated Samples:
13SP0101
13SP0101-F
13SP0201
13SP0201-F
13SP0301
13SP0301-F

APPENDIX B
FREQUENCY OF DETECTION TABLES
SEEPS - ROUND 2
SWMU 13 - MINE FILL B
NSWC CRANE, INDIANA

CAS Number	Chemical	Minimum Concentration	Minimum Qualifier	Maximum Concentration	Maximum Qualifier	Units	Sample Containing Maximum Concentration	Detection Frequency	Range of Nondetects
	13SP0401								
	13SP0401-F								

SWMU 16

SWMU 16
GROUNDWATER – ROUND 1

APPENDIX B
FREQUENCY OF DETECTION TABLES
GROUND WATER - ROUND 1
SWMU 16 - B146 CAST HIGH EXPLOSIVES INCINERATOR
NSWC CRANE, INDIANA

FEDMCL	FEDSMCL	R9TAPW	IDCLRGDF	CAS Number	Chemical	Minimum Concentration	Minimum Qualifier	Maximum Concentration	Maximum Qualifier	Units	Sample Containing Maximum Concentration
					Volatile Organics						
5	NA	0.2	5	79-00-5	1,1,2-TRICHLOROETHANE	38	J	38	J	UG/L	16GWT0601
7	NA	340	7	75-35-4	1,1-DICHLOROETHENE	26	J	26	J	UG/L	16GWT0601
NA	NA	160	210	108-10-1	4-METHYL-2-PENTANONE	3.5	J	3.5	J	UG/L	16GWT0601
NA	NA	610	770	67-64-1	ACETONE	1.3	J	1.3	J	UG/L	16GWT0101
5	NA	0.34	5	71-43-2	BENZENE	0.9	J	0.9	J	UG/L	16GWT0601
80	NA	0.18	100	75-27-4	BROMODICHLOROMETHANE	0.8	J	0.8	J	UG/L	16GWT0601
NA	NA	1000	1300	75-15-0	CARBON DISULFIDE	0.8	J	0.8	J	UG/L	16GWT0601
5	NA	0.17	5	56-23-5	CARBON TETRACHLORIDE	15		15		UG/L	16GW0301
80	NA	6.2	100	67-66-3	CHLOROFORM	5.6		12	J	UG/L	16GWT0601
70	NA	61	70	156-59-2	CIS-1,2-DICHLOROETHENE	0.3	J	600		UG/L	16GWT0601
5	NA	0.66	5	127-18-4	TETRACHLOROETHENE	13	J	13	J	UG/L	16GWT0601
1000	NA	720	1000	108-88-3	TOLUENE	32	J	32	J	UG/L	16GWT0601
100	NA	120	100	156-60-5	TRANS-1,2-DICHLOROETHENE	3.1	J	3.1	J	UG/L	16GWT0601
5	NA	0.028	5	79-01-6	TRICHLOROETHENE	0.5	J	35000		UG/L	16GWT0601
2	NA	0.02	2	75-01-4	VINYL CHLORIDE	0.3	J	65	J	UG/L	16GWT0601
					Semivolatile Organics						
NA	NA	6.2	150	91-57-6	2-METHYLNAPHTHALENE	0.11		0.11		UG/L	16GWT0601
NA	NA	370	460	83-32-9	ACENAPHTHENE	0.07	J	0.07	J	UG/L	16GWT0601
NA	NA	0.092	1.2	205-99-2	BENZO(B)FLUORANTHENE	0.09	J	0.09	J	UG/L	16GWT0601
NA	NA	9.2	1.6	218-01-9	CHRYSENE	0.1	J	0.1	J	UG/L	16GWT0601
NA	NA	29000	29000	84-66-2	DIETHYL PHTHALATE	1	J	1	J	UG/L	16GWT0601
NA	NA	1500	210	206-44-0	FLUORANTHENE	0.11		0.11		UG/L	16GWT0601
NA	NA	240	310	86-73-7	FLUORENE	0.1	J	0.1	J	UG/L	16GWT0601
NA	NA	180	NA	85-01-8	PHENANTHRENE	0.54		0.54		UG/L	16GWT0601
NA	NA	180	140	129-00-0	PYRENE	0.2		0.2		UG/L	16GWT0601
NA	NA	36	NA	110-86-1	PYRIDINE	9		9		UG/L	16GWT0602
					Explosives						
NA	NA	NA	NA	35572-78-2	2-AMINO-4,6-DINITROTOLUENE	0.48	J	0.48	J	UG/L	16GW0301
NA	NA	NA	NA	19406-51-0	4-AMINO-2,6-DINITROTOLUENE	0.86	J	0.86	J	UG/L	16GW0301
NA	NA	1800	NA	2691-41-0	HMX	0.39		7.8		UG/L	16GWT0401
NA	NA	0.61	NA	121-82-4	RDX	0.79		77		UG/L	16GWT0401
					Total Inorganics						
NA	50	36000	NA	7429-90-5	ALUMINUM	19.2	J	9680		UG/L	16GW0401
10	NA	0.045	50	7440-38-2	ARSENIC	0.81	J	4.5	J	UG/L	16GWT0601
2000	NA	2600	2000	7440-39-3	BARIUM	5	J	107	J	UG/L	16GWT0201
4	NA	73	4	7440-41-7	BERYLLIUM	2	J	4.7	J	UG/L	16GWT0501
5	NA	18	5	7440-43-9	CADMIUM	0.83	J	1.1	J	UG/L	16GW0501

APPENDIX B
FREQUENCY OF DETECTION TABLES
GROUND WATER - ROUND 1
SWMU 16 - B146 CAST HIGH EXPLOSIVES INCINERATOR
NSWC CRANE, INDIANA

FEDMCL	FEDSMCL	R9TAPW	IDCLRGDF	CAS Number	Chemical	Minimum Concentration	Minimum Qualifier	Maximum Concentration	Maximum Qualifier	Units	Sample Containing Maximum Concentration
NA	NA	NA	NA	7440-70-2	CALCIUM	22600	J	194000	J	UG/L	16GW0101
100	NA	110	NA	7440-47-3	CHROMIUM	0.68	J	0.93	J	UG/L	16GWT0601
NA	NA	730	NA	7440-48-4	COBALT	2	J	154	J	UG/L	16GW0101
1300	1000	1500	1300	7440-50-8	COPPER	0.82	J	4.9	J	UG/L	16GWT0601
NA	300	11000	NA	7439-89-6	IRON	171	J	52700	J	UG/L	16GW0101
15	NA	NA	15	7439-92-1	LEAD	0.89	J	1.8	J	UG/L	16GWT0501
NA	NA	730	NA	7439-93-2	LITHIUM	8.5	J	328	J	UG/L	16GW0101
NA	NA	NA	NA	7439-95-4	MAGNESIUM	6240	J	84500	J	UG/L	16GW0101
NA	50	880	NA	7439-96-5	MANGANESE	353	J	29300	J	UG/L	16GW0101
NA	NA	730	730	7440-02-0	NICKEL	1.5	J	304	J	UG/L	16GWT0501
NA	NA	NA	NA	7440-09-7	POTASSIUM	738	J	11900	J	UG/L	16GWT0601
50	NA	180	50	7782-49-2	SELENIUM	1.2	J	1.2	J	UG/L	16GWT0601
NA	NA	NA	NA	7440-23-5	SODIUM	7190	J	37100	J	UG/L	16GWT0601
NA	NA	22000	NA	7440-24-6	STRONTIUM	88.4	J	387	J	UG/L	16GWT0201
NA	NA	NA	NA	7440-32-6	TITANIUM	1	J	8.4	J	UG/L	16GWT0401
NA	NA	260	NA	7440-62-2	VANADIUM	0.51	J	0.86	J	UG/L	16GW0401
NA	5000	11000	11000	7440-66-6	ZINC	6.2	J	329	J	UG/L	16GWT0501
					Miscellaneous Parameters						
NA	NA	NA	NA	TTNUS493	AMMONIA-N	0.02		0.57		MG/L	16GWT0601
NA	NA	NA	NA	TTNUS494	NITRITE/NITRATE-N	0.03		0.6		MG/L	16GWT0401
					Field Parameters						
NA	NA	NA	NA	TTNUS034	DISSOLVED OXYGEN	0.2		6.94		MG/L	16GWT0602
NA	NA	NA	NA	TTNUS033	OXIDATION REDUCTION POTENTIAL	-130		207.4		MV	16GW0401
NA	0	NA	NA	TTNUS002	PH	3.68		7.7		S.U.	16GWT0601
NA	NA	NA	NA	TTNUS038	SPECIFIC CONDUCTANCE	0.225		1.606		MS/CM	16GW0101
NA	NA	NA	NA	TTNUS047	TEMPERATURE	11.51		15		C	16GWT0601
NA	NA	NA	NA	TTNUS023	TURBIDITY	0		999	>	NTU	16GWT0101

Associated Samples:
16GW0101
16GW0201
16GW0202
16GW0301
16GW0401
16GW0501
16GWT0101
16GWT0201
16GWT0301

FEDMCL	FEDSMCL	R9TAPW	IDCLRGDF	CAS Number	Chemical	Minimum Concentration	Minimum Qualifier	Maximum Concentration	Maximum Qualifier	Units	Sample Containing Maximum Concentration
					16GWT0401						
					16GWT0501						
					16GWT0601						
					16GWT0602						

APPENDIX B
FREQUENCY OF DETECTION TABLES
GROUND WATER - ROUND 1
SWMU 16 - B146 CAST HIGH EXPLOSIVES INCINERATOR
NSWC CRANE, INDIANA

FEDMCL	FEDSMCL	R9TAPW	IDCLRGDF	CAS Number	Chemical	Detection Frequency	Range of Nondetects
					Volatile Organics		
5	NA	0.2	5	79-00-5	1,1,2-TRICHLOROETHANE	1/11	0.3
7	NA	340	7	75-35-4	1,1-DICHLOROETHENE	1/11	0.3
NA	NA	160	210	108-10-1	4-METHYL-2-PENTANONE	1/11	0.5
NA	NA	610	770	67-64-1	ACETONE	1/2	10
5	NA	0.34	5	71-43-2	BENZENE	1/11	0.3
80	NA	0.18	100	75-27-4	BROMODICHLOROMETHANE	1/11	0.3
NA	NA	1000	1300	75-15-0	CARBON DISULFIDE	1/11	0.3
5	NA	0.17	5	56-23-5	CARBON TETRACHLORIDE	1/11	0.3
80	NA	6.2	100	67-66-3	CHLOROFORM	2/11	0.3
70	NA	61	70	156-59-2	CIS-1,2-DICHLOROETHENE	4/11	0.3
5	NA	0.66	5	127-18-4	TETRACHLOROETHENE	1/11	0.3
1000	NA	720	1000	108-88-3	TOLUENE	1/11	0.3
100	NA	120	100	156-60-5	TRANS-1,2-DICHLOROETHENE	1/11	0.3
5	NA	0.028	5	79-01-6	TRICHLOROETHENE	8/11	0.3
2	NA	0.02	2	75-01-4	VINYL CHLORIDE	2/11	0.3
					Semivolatile Organics		
NA	NA	6.2	150	91-57-6	2-METHYLNAPHTHALENE	1/10	0.05
NA	NA	370	460	83-32-9	ACENAPHTHENE	1/10	0.05
NA	NA	0.092	1.2	205-99-2	BENZO(B)FLUORANTHENE	1/10	0.05
NA	NA	9.2	1.6	218-01-9	CHRYSENE	1/10	0.05
NA	NA	29000	29000	84-66-2	DIETHYL PHTHALATE	1/12	1
NA	NA	1500	210	206-44-0	FLUORANTHENE	1/10	0.05
NA	NA	240	310	86-73-7	FLUORENE	1/10	0.05
NA	NA	180	NA	85-01-8	PHENANTHRENE	1/10	0.05
NA	NA	180	140	129-00-0	PYRENE	1/10	0.05
NA	NA	36	NA	110-86-1	PYRIDINE	1/12	1
					Explosives		
NA	NA	NA	NA	35572-78-2	2-AMINO-4,6-DINITROTOLUENE	1/10	0.165 - 0.65
NA	NA	NA	NA	19406-51-0	4-AMINO-2,6-DINITROTOLUENE	1/10	0.165 - 0.65
NA	NA	1800	NA	2691-41-0	HMX	4/10	0.21 - 0.65
NA	NA	0.61	NA	121-82-4	RDX	6/10	0.195 - 0.6
					Total Inorganics		
NA	50	36000	NA	7429-90-5	ALUMINUM	10/11	60.6
10	NA	0.045	50	7440-38-2	ARSENIC	7/11	0.1 - 0.41
2000	NA	2600	2000	7440-39-3	BARIUM	11/11	NA
4	NA	73	4	7440-41-7	BERYLLIUM	2/11	0.03 - 1.1
5	NA	18	5	7440-43-9	CADMIUM	2/11	0.05 - 0.31

FREQUENCY OF DETECTION TABLES
GROUND WATER - ROUND 1
SWMU 16 - B146 CAST HIGH EXPLOSIVES INCINERATOR
NSWC CRANE, INDIANA

FEDMCL	FEDSMCL	R9TAPW	IDCLRGDF	CAS Number	Chemical	Detection Frequency	Range of Nondetects
NA	NA	NA	NA	7440-70-2	CALCIUM	11/11	NA
100	NA	110	NA	7440-47-3	CHROMIUM	2/11	0.27 - 0.58
NA	NA	730	NA	7440-48-4	COBALT	11/11	NA
1300	1000	1500	1300	7440-50-8	COPPER	7/11	0.06 - 0.15
NA	300	11000	NA	7439-89-6	IRON	11/11	NA
15	NA	NA	15	7439-92-1	LEAD	3/11	0.03 - 0.51
NA	NA	730	NA	7439-93-2	LITHIUM	10/11	0.72
NA	NA	NA	NA	7439-95-4	MAGNESIUM	11/11	NA
NA	50	880	NA	7439-96-5	MANGANESE	11/11	NA
NA	NA	730	730	7440-02-0	NICKEL	11/11	NA
NA	NA	NA	NA	7440-09-7	POTASSIUM	10/11	3390
50	NA	180	50	7782-49-2	SELENIUM	1/11	0.05 - 0.43
NA	NA	NA	NA	7440-23-5	SODIUM	11/11	NA
NA	NA	22000	NA	7440-24-6	STRONTIUM	11/11	NA
NA	NA	NA	NA	7440-32-6	TITANIUM	11/11	NA
NA	NA	260	NA	7440-62-2	VANADIUM	5/11	0.05 - 0.36
NA	5000	11000	11000	7440-66-6	ZINC	11/11	NA
					Miscellaneous Parameters		
NA	NA	NA	NA	TTNUS493	AMMONIA-N	10/10	NA
NA	NA	NA	NA	TTNUS494	NITRITE/NITRATE-N	4/10	0.02
					Field Parameters		
NA	NA	NA	NA	TTNUS034	DISSOLVED OXYGEN	13/13	NA
NA	NA	NA	NA	TTNUS033	OXIDATION REDUCTION POTENTIAL	13/13	NA
NA	0	NA	NA	TTNUS002	PH	13/13	NA
NA	NA	NA	NA	TTNUS038	SPECIFIC CONDUCTANCE	13/13	NA
NA	NA	NA	NA	TTNUS047	TEMPERATURE	13/13	NA
NA	NA	NA	NA	TTNUS023	TURBIDITY	13/13	NA

Associated Samples:
16GW0101
16GW0201
16GW0202
16GW0301
16GW0401
16GW0501
16GWT0101
16GWT0201
16GWT0301

APPENDIX B
FREQUENCY OF DETECTION TABLES
GROUND WATER - ROUND 1
SWMU 16 - B146 CAST HIGH EXPLOSIVES INCINERATOR
NSWC CRANE, INDIANA

FEDMCL	FEDSMCL	R9TAPW	IDCLRGDF	CAS Number	Chemical	Detection Frequency	Range of Nondetects
					16GWT0401		
					16GWT0501		
					16GWT0601		
					16GWT0602		

SWMU 16
GROUNDWATER – ROUND 2

APPENDIX B
FREQUENCY OF DETECTION TABLES
GROUND WATER - ROUND 2
SWMU 16 - B146 CAST HIGH EXPLOSIVES INCINERATOR
NSWC CRANE, INDIANA

CAS Number	Chemical	Minimum Concentration	Minimum Qualifier	Maximum Concentration	Maximum Qualifier	Units	Sample Containing Maximum Concentration	Detection Frequency	Range of Nondetects
	Volatile Organic Compounds								
79-34-5	1,1,2,2-TETRACHLOROETHANE	1.6	J	1.6	J	UG/L	16GWT0603	1/21	0.3 - 30
79-00-5	1,1,2-TRICHLOROETHANE	32		220	J	UG/L	16GWT0603	3/21	0.3 - 0.3
75-35-4	1,1-DICHLOROETHENE	5.3		120		UG/L	16GWT0603	2/21	0.3 - 30
591-78-6	2-HEXANONE	16	J	16	J	UG/L	16GWT0603	1/21	0.5 - 50
108-10-1	4-METHYL-2-PENTANONE	7.1		7.1		UG/L	16GWT0603	1/21	0.5 - 50
67-64-1	ACETONE	0.5	J	18	J	UG/L	16GWT0603	5/15	0.5 - 0.5
71-43-2	BENZENE	0.7	J	3.3		UG/L	16GWT0603	3/21	0.3 - 30
75-15-0	CARBON DISULFIDE	0.3	J	4.3		UG/L	16GWT0603	2/21	0.3 - 30
56-23-5	CARBON TETRACHLORIDE	0.8	J	11		UG/L	16GW0302	2/21	0.3 - 30
67-66-3	CHLOROFORM	0.9	J	16		UG/L	16GWT1101	9/21	0.3 - 30
156-59-2	CIS-1,2-DICHLOROETHENE	0.2	J	4200		UG/L	16GWT0603	9/21	0.3 - 0.3
74-84-0	ETHANE	0.013		7.7		UG/L	16GWT0603	9/9	NA
74-85-1	ETHENE	0.0093		65		UG/L	16GWT0603	9/9	NA
100-41-4	ETHYLBENZENE	2.6		2.6		UG/L	16GWT0603	1/21	0.3 - 30
74-82-8	METHANE	0.032		5800		UG/L	16GWT1801	9/9	NA
75-09-2	METHYLENE CHLORIDE	0.6	J	59	J	UG/L	16GWT1301	2/21	0.3 - 0.3
107-12-0	PROPIONITRILE	26	J	26	J	UG/L	16GWT1501	1/21	20 - 20
127-18-4	TETRACHLOROETHENE	0.3	J	160		UG/L	16GWT0603	3/21	0.3 - 30
108-88-3	TOLUENE	270	J	270	J	UG/L	16GWT0603	1/21	0.3 - 30
1330-20-7	TOTAL XYLENES	3.5		3.5		UG/L	16GWT0603	1/21	0.3 - 30
156-60-5	TRANS-1,2-DICHLOROETHENE	4.1		22		UG/L	16GWT0603	2/21	0.3 - 30
79-01-6	TRICHLOROETHENE	0.5	J	250000		UG/L	16GWT0603	13/21	0.3 - 0.3
75-01-4	VINYL CHLORIDE	2.1		340	J	UG/L	16GWT0603	2/21	0.3 - 30
	Explosives								
6629-29-4	2,4-DIAMINO-6-NITROTOLUENE	0.27	J	0.27	J	UG/L	16GWT0603	1/20	0.24 - 0.287
35572-78-2	2-AMINO-4,6-DINITROTOLUENE	0.31	J	4.2	J	UG/L	16GWT0603	4/20	0.24 - 0.287
19406-51-0	4-AMINO-2,6-DINITROTOLUENE	0.69	J	1.5		UG/L	16GWT0603	4/20	0.24 - 0.287
TTNUS498	DNX	0.63	J	0.63	J	UG/L	16GWT0402	1/20	0.24 - 0.287
2691-41-0	HMX	0.27	J	21		UG/L	16GWT0402	9/20	0.24 - 0.275
TTNUS232	MNX	0.5	J	4.1		UG/L	16GWT0402	4/20	0.24 - 0.275
121-82-4	RDX	1.8		200		UG/L	16GWT0402	9/20	0.24 - 0.269

APPENDIX B
FREQUENCY OF DETECTION TABLES
GROUND WATER - ROUND 2
SWMU 16 - B146 CAST HIGH EXPLOSIVES INCINERATOR
NSWC CRANE, INDIANA

CAS Number	Chemical	Minimum Concentration	Minimum Qualifier	Maximum Concentration	Maximum Qualifier	Units	Sample Containing Maximum Concentration	Detection Frequency	Range of Nondetects
	Total Inorganics								
7429-90-5	ALUMINUM	187	J	296000	J	UG/L	16GWT0801	17/20	8.3 - 29.1
7440-36-0	ANTIMONY	2.1	J	6.3	J	UG/L	16GWT1101	2/20	0.02 - 1.8
7440-38-2	ARSENIC	0.66	J	32.1	J	UG/L	16GW0102	12/20	0.1 - 1.9
7440-39-3	BARIUM	6	J	1700	J	UG/L	16GWT0801	20/20	NA
7440-41-7	BERYLLIUM	1.9	J	15.1	J	UG/L	16GWT0801	6/20	0.06 - 2.7
7440-43-9	CADMIUM	4	J	4	J	UG/L	16GWT1601	1/20	0.04 - 1.4
7440-70-2	CALCIUM	8240	J	212000	J	UG/L	16GW0203	18/20	19700 - 106000
7440-47-3	CHROMIUM	3.5	J	452	J	UG/L	16GWT0801	8/20	0.17 - 1.3
7440-48-4	COBALT	4.2	J	530	J	UG/L	16GWT1601	19/20	0.71 - 0.71
7440-50-8	COPPER	2.8	J	86.1	J	UG/L	16GWT0801	10/20	0.07 - 1.2
7439-89-6	IRON	1110	J	241000	J	UG/L	16GWT0801	20/20	NA
7439-92-1	LEAD	2.4	J	127	J	UG/L	16GWT0801	9/20	0.12 - 2
7439-95-4	MAGNESIUM	3130	J	133000	J	UG/L	16GWT1601	20/20	NA
7439-96-5	MANGANESE	33.6	J	24600	J	UG/L	16GWT1001	20/20	NA
7439-97-6	MERCURY	0.028	J	0.12	J	UG/L	16GWT0801	2/20	0.007 - 0.03
7440-02-0	NICKEL	3	J	714	J	UG/L	16GWT1601	20/20	NA
7440-09-7	POTASSIUM	1530	J	74400	J	UG/L	16GWT0801	20/20	NA
7782-49-2	SELENIUM	2.8	J	5.2	J	UG/L	16GWT1601	3/20	0.04 - 1.4
7440-23-5	SODIUM	6770	J	224000	J	UG/L	16GWT1801	20/20	NA
7440-31-5	TIN	2.5	J	3.9	J	UG/L	16GWT0801	2/20	0.1 - 2.6
7440-32-6	TITANIUM	2.6	J	1020	J	UG/L	16GWT0801	9/20	0.07 - 4.5
7440-62-2	VANADIUM	0.65	J	410	J	UG/L	16GWT0801	10/20	0.07 - 1.7
7440-66-6	ZINC	10.6	J	791	J	UG/L	16GWT1601	20/20	NA
	Dissolved Inorganics								
7429-90-5	ALUMINUM	126	J	2460	J	UG/L	16GWT1601-F	3/6	33 - 85.5
7440-36-0	ANTIMONY	1.5	J	8.8	J	UG/L	16GWT1101-F	2/6	0.11 - 1.5
7440-38-2	ARSENIC	1.3	J	4.6	J	UG/L	16GWT1601-F	2/6	0.82 - 1.5
7440-39-3	BARIUM	12.9	J	341	J	UG/L	16GWT1801-F	6/6	NA
7440-41-7	BERYLLIUM	3.8	J	3.8	J	UG/L	16GWT1601-F	1/6	0.1 - 0.94
7440-43-9	CADMIUM	3	J	3	J	UG/L	16GWT1601-F	1/6	0.04 - 0.62
7440-70-2	CALCIUM	7910	J	158000	J	UG/L	16GWT1601-F	6/6	NA

APPENDIX B
FREQUENCY OF DETECTION TABLES
GROUND WATER - ROUND 2
SWMU 16 - B146 CAST HIGH EXPLOSIVES INCINERATOR
NSWC CRANE, INDIANA

CAS Number	Chemical	Minimum Concentration	Minimum Qualifier	Maximum Concentration	Maximum Qualifier	Units	Sample Containing Maximum Concentration	Detection Frequency	Range of Nondetects
7440-47-3	CHROMIUM	0.59	J	0.59	J	UG/L	16GWT1801-F	1/6	0.26 - 0.71
7440-48-4	COBALT	4.8	J	522	J	UG/L	16GWT1601-F	5/6	1.1 - 1.1
7440-50-8	COPPER	2.8	J	20	J	UG/L	16GWT1601-F	3/6	0.49 - 1.5
7439-89-6	IRON	5230	J	43200	J	UG/L	16GWT0302-F	2/6	25.4 - 1140
7439-92-1	LEAD	6.2	J	6.2	J	UG/L	16GWT1601-F	1/6	0.15 - 1.4
7439-95-4	MAGNESIUM	2850	J	131000	J	UG/L	16GWT1601-F	6/6	NA
7439-96-5	MANGANESE	17.7	J	16700	J	UG/L	16GWT1601-F	6/6	NA
7440-02-0	NICKEL	4.6	J	622	J	UG/L	16GWT1601-F	5/6	1.4 - 1.4
7440-09-7	POTASSIUM	3410	J	16500	J	UG/L	16GWT1601-F	6/6	NA
7782-49-2	SELENIUM	3.1	J	3.1	J	UG/L	16GWT1601-F	1/6	0.05 - 1.8
7440-23-5	SODIUM	18500	J	218000	J	UG/L	16GWT1801-F	6/6	NA
7440-32-6	TITANIUM	1.9	J	2.4	J	UG/L	16GWT1601-F	2/6	0.68 - 2.3
7440-62-2	VANADIUM	0.53	J	0.53	J	UG/L	16GWT1801-F	1/6	0.06 - 0.59
7440-66-6	ZINC	1.6	J	596	J	UG/L	16GWT1601-F	6/6	NA
	Miscellaneous Parameters								
16887-00-6	CHLORIDE	4		120		MG/L	16GWT1701	13/17	2 - 17
TTNUS494	NITRITE/NITRATE-N	0.07		0.7		MG/L	16GW0302	5/17	0.025 - 0.05
14808-79-8	SULFATE	6		980	J	MG/L	16GWT1001	15/17	180 - 210
TTNUS003	TOTAL ORGANIC CARBON	1.4		2.6		MG/L	16GWT1501	3/3	NA
	Field Parameters								
TTNUS008	ALKALINITY	75		500		MG/L	16GWT1801	5/10	10 - 10
124-38-9	CARBON DIOXIDE	18		280		MG/L	16GWT1001	9/10	10 - 10
TTNUS034	DISSOLVED OXYGEN	0.1		6		MG/L	16GWT1301	10/10	NA
TTNUS186	DISSOLVED OXYGEN - METER	0.28		7.27		MG/L	16GWT1301	21/21	NA
TTNUS015	FERROUS IRON	0		5.19		MG/L	16GWT0402	10/10	NA
TTNUS210	HYDROGEN SULFIDE (H2S)	0		0		MG/L	16GWT1301	9/9	NA
TTNUS210	HYDROGEN SULFIDE (H2S)	0		0		MG/L	16GW0302	9/9	NA
TTNUS210	HYDROGEN SULFIDE (H2S)	0		0		MG/L	16GWT1001	9/9	NA
TTNUS210	HYDROGEN SULFIDE (H2S)	0		0		MG/L	16GWT0402	9/9	NA
TTNUS210	HYDROGEN SULFIDE (H2S)	0		0		MG/L	16GWT1201	9/9	NA
TTNUS210	HYDROGEN SULFIDE (H2S)	0		0		MG/L	16GWT1501	9/9	NA
TTNUS210	HYDROGEN SULFIDE (H2S)	0		0		MG/L	16GWT0603	9/9	NA

APPENDIX B
FREQUENCY OF DETECTION TABLES
GROUND WATER - ROUND 2
SWMU 16 - B146 CAST HIGH EXPLOSIVES INCINERATOR
NSWC CRANE, INDIANA

CAS Number	Chemical	Minimum Concentration	Minimum Qualifier	Maximum Concentration	Maximum Qualifier	Units	Sample Containing Maximum Concentration	Detection Frequency	Range of Nondetects
TTNUS210	HYDROGEN SULFIDE (H2S)	0		0		MG/L	16GW0502	9/9	NA
TTNUS210	HYDROGEN SULFIDE (H2S)	0		0		MG/L	16GW0203	9/9	NA
7439-96-5	MANGANESE	0		22	>	MG/L	16GWT1001	10/10	NA
TTNUS496	NITRITE-N	0		0.016		MG/L	16GWT0603	10/10	NA
TTNUS033	OXIDATION REDUCTION POTENTIAL	-69		350		MV	16GW0302	21/21	NA
TTNUS002	PH	3.65		7.99		S.U.	16GWT1501	21/21	NA
TTNUS038	SPECIFIC CONDUCTANCE	0.256		2.322		MS/CM	16GWT0102	21/21	NA
18496-25-8	SULFIDE	0		0.1		MG/L	16GW0502	10/10	NA
TTNUS047	TEMPERATURE	7.29		21.88		C	16GWT1301	21/21	NA
TTNUS023	TURBIDITY	0.13		1000	>	NTU	16GWT1601	21/21	NA
TTNUS023	TURBIDITY	0.13		1000	>	NTU	16GWT0801	21/21	NA
TTNUS023	TURBIDITY	0.13		1000	>	NTU	16GWT1801	21/21	NA

SWMU 16
SURFACE SOIL – ROUND 1

APP X B
FREQUENCY OF DETECTION TABLES
SURFACE SOIL - ROUND 1
SWMU 16 - B146 CAST HIGH EXPLOSIVES INCINERATOR
NSWC CRANE, INDIANA

SSLDAF1	SSLINH	IDCLRESD	IDCLRSGW	R9SORES	R5DQLSO	CAS Number	Chemical	Minimum Concentration	Minimum Qualifier	Maximum Concentration	Maximum Qualifier	Units	Sample Containing Maximum Concentration	Detection Frequency	Range of Nondetects
							Volatiles								
730	NA	3900000	3100	1600000	2500	67-64-1	ACETONE	3	J	71	J	UG/KG	16SS290002	8/39	1.1 - 8
20	NA	110000	400	43000	783.73	156-59-2	CIS-1,2-DICHLOROETHENE	2	J	23		UG/KG	16SS390002	2/39	1 - 1.3
28000	250000	NA	NA	94000	39500	75-71-8	DICHLORODIFLUOROMETHANE	10	J	10	J	UG/KG	16SS330002	1/39	1 - 1.3
180	1500000	11000000	3500	1700000	4690	100-42-5	STYRENE	1	J	1	J	UG/KG	16SS040002	1/39	1 - 1.3
590	650000	1700000	12000	520000	5450	108-88-3	TOLUENE	1	J	1	J	UG/KG	16SS160002	1/39	1 - 1.3
34	NA	180000	680	69000	783.73	156-60-5	TRANS-1,2-DICHLOROETHENE	1	J	2	J	UG/KG	16SS030002	4/39	1 - 1.3
34	NA	180000	680	69000	783.73	156-60-5	TRANS-1,2-DICHLOROETHENE	1	J	2	J	UG/KG	16SS390002	4/39	1 - 1.3
2.8	4600	45000	57	53	12400	79-01-6	TRICHLOROETHENE	2	J	86		UG/KG	16SS390002	4/39	1 - 1.3
8000	1100000	NA	NA	390000	16400	75-69-4	TRICHLOROFLUOROMETHANE	2	J	3	J	UG/KG	16SS130002	31/39	1 - 1.3
8000	1100000	NA	NA	390000	16400	75-69-4	TRICHLOROFLUOROMETHANE	2	J	3	J	UG/KG	16SS230002	31/39	1 - 1.3
8000	1100000	NA	NA	390000	16400	75-69-4	TRICHLOROFLUOROMETHANE	2	J	3	J	UG/KG	16SS240002	31/39	1 - 1.3
8000	1100000	NA	NA	390000	16400	75-69-4	TRICHLOROFLUOROMETHANE	2	J	3	J	UG/KG	16SS290002	31/39	1 - 1.3
8000	1100000	NA	NA	390000	16400	75-69-4	TRICHLOROFLUOROMETHANE	2	J	3	J	UG/KG	16SS330002	31/39	1 - 1.3
8000	1100000	NA	NA	390000	16400	75-69-4	TRICHLOROFLUOROMETHANE	2	J	3	J	UG/KG	16SS350002	31/39	1 - 1.3
7800	990000	1100000	2300	430000	12700	108-05-4	VINYL ACETATE	1	J	1	J	UG/KG	16SS190002	2/39	1 - 1.3
7800	990000	1100000	2300	430000	12700	108-05-4	VINYL ACETATE	1	J	1	J	UG/KG	16SS350002	2/39	1 - 1.3
							Semivolatiles								
NA	NA	3700000	16000	56000	3240	91-57-6	2-METHYLNAPHTHALENE	4	J	94		UG/KG	16SS030002	2/39	3.4 - 4.3
31000	NA	9500000	130000	3700000	682000	83-32-9	ACENAPHTHENE	5	J	1800		UG/KG	16SS030002	2/39	3.5 - 4.3
NA	NA	NA	NA	3700000	682000	208-96-8	ACENAPHTHYLENE	4	J	680		UG/KG	16SS030002	3/39	3.5 - 4.3
650000	NA	47000000	51000	22000000	1480000	120-12-7	ANTHRACENE	5	J	3500		UG/KG	16SS030002	4/39	3.5 - 4.3
80	NA	5100	19000	620	5210	56-55-3	BENZO(A)ANTHRACENE	4	J	9600		UG/KG	16SS030002	12/39	3.5 - 4.3
410	NA	510	8200	62	1520	50-32-8	BENZO(A)PYRENE	4	J	8400		UG/KG	16SS030002	13/39	3.5 - 4.3
200	NA	5100	57000	620	59800	205-99-2	BENZO(B)FLUORANTHENE	4	J	9200		UG/KG	16SS030002	16/39	3.5 - 4.2
NA	NA	NA	NA	2300000	119000	191-24-2	BENZO(G,H,I)PERYLENE	4	J	5100		UG/KG	16SS030002	12/39	3.5 - 4.3
2000	NA	51000	39000	6200	148000	207-08-9	BENZO(K)FLUORANTHENE	4	J	5000		UG/KG	16SS030002	11/39	3.5 - 4.3
180000	NA	310000	3600000	35000	925.94	117-81-7	BIS(2-ETHYLHEXYL)PHTHALATE	92	J	1200		UG/KG	16SS040002	9/39	69 - 730
8000	NA	510000	26000	62000	4730	218-01-9	CHRYSENE	4	J	11000		UG/KG	16SS030002	15/39	3.5 - 4.3
80	NA	510	18000	62	18400	53-70-3	DIBENZO(A,H)ANTHRACENE	8		1600		UG/KG	16SS030002	3/39	3.5 - 4.3
2400	NA	730000	9700	290000	NA	132-64-9	DIBENZOFURAN	560	J	560	J	UG/KG	16SS030002	1/39	69 - 87
310000	NA	6300000	880000	2300000	122000	206-44-0	FLUORANTHENE	4	J	19000		UG/KG	16SS030002	15/39	3.5 - 4.3
41000	NA	6300000	170000	2600000	122000	86-73-7	FLUORENE	4	J	2300		UG/KG	16SS030002	4/39	3.5 - 4.3
700	NA	5100	3100	620	109000	193-39-5	INDENO(1,2,3-CD)PYRENE	5	J	4400		UG/KG	16SS030002	10/39	3.5 - 4.3
3100	170000	3200000	700	56000	99.39	91-20-3	NAPHTHALENE	4	J	180		UG/KG	16SS030002	3/39	3.4 - 4.3
NA	NA	NA	NA	2300000	45700	85-01-8	PHENANTHRENE	4	J	8700		UG/KG	16SS030002	8/39	3.5 - 4.3
230000	NA	5500000	570000	2300000	78500	129-00-0	PYRENE	4	J	35000		UG/KG	16SS030002	17/39	3.5 - 4.3
NA	NA	NA	NA	NA	403.98	94-59-7	SAFROLE	340	J	15000		UG/KG	16SS130002	5/39	69 - 150
							Explosives								
NA	NA	NA	NA	3100	NA	2691-41-0	HMX	0.34	J	0.34	J	MG/KG	16SS330002	1/39	0.25
							Herbicides								

APPENDIX B
FREQUENCY OF DETECTION TABLES
SURFACE SOIL - ROUND 1
SWMU 16 - B146 CAST HIGH EXPLOSIVES INCINERATOR
NSWC CRANE, INDIANA

SSLDAF1	SSLINH	IDCLRESD	IDCLRSGW	R9SORES	R5DQLSO	CAS Number	Chemical	Minimum Concentration	Minimum Qualifier	Maximum Concentration	Maximum Qualifier	Units	Sample Containing Maximum Concentration	Detection Frequency	Range of Nondetects
570000	NA	NA	NA	18000	198.78	70-30-4	HEXACHLOROPHENE	2.6	J	2.6	J	UG/KG	16SS030002	1/39	0.62 - 1.1
1.4	NA	20000	28	3000	119.27	87-86-5	PENTACHLOROPHENOL	0.79	J	14		UG/KG	16SS050002	4/39	0.46 - 0.58
							Dioxins/Furans								
NA	NA	NA	NA	39000	0.199	3268-87-9	1,2,3,4,6,7,8,9-OCDD	49.4		11500		NG/KG	16SS330002	26/28	89.4 - 815
NA	NA	NA	NA	39000	38.6	39001-02-0	1,2,3,4,6,7,8,9-OCDF	0.62	J	20.1		NG/KG	16SS130002	9/28	0.2 - 2.6
NA	NA	NA	NA	390	0.199	35822-46-9	1,2,3,4,6,7,8-HPCDD	1.1	J	151		NG/KG	16SS060002	27/28	1.5
NA	NA	NA	NA	390	38.6	67562-39-4	1,2,3,4,6,7,8-HPCDF	0.33	J	8		NG/KG	16SS130002	10/28	0.07 - 6.2
NA	NA	NA	NA	390	38.6	55673-89-7	1,2,3,4,7,8,9-HPCDF	1.8	J	1.8	J	NG/KG	16SS130002	1/28	0.08 - 1.2
NA	NA	NA	NA	39	0.199	39227-28-6	1,2,3,4,7,8-HXCDD	0.2	J	1.5	J	NG/KG	16SS270002	6/28	0.1 - 0.82
NA	NA	NA	NA	39	38.6	70648-26-9	1,2,3,4,7,8-HXCDF	0.17	J	0.98	J	NG/KG	16SS130002	9/28	0.05 - 0.44
NA	NA	NA	NA	39	0.199	57653-85-7	1,2,3,6,7,8-HXCDD	0.27	J	2.5	J	NG/KG	16SS270002	8/28	0.09 - 0.92
NA	NA	NA	NA	39	38.6	57117-44-9	1,2,3,6,7,8-HXCDF	0.24	J	0.64	J	NG/KG	16SS130002	4/28	0.04 - 0.4
3200	2500000	NA	NA	39	0.199	19408-74-3	1,2,3,7,8,9-HXCDD	0.47	J	4.7	J	NG/KG	16SS270002	14/28	0.1 - 1.1
NA	NA	NA	NA	39	38.6	72918-21-9	1,2,3,7,8,9-HXCDF	0.25	J	0.81	J	NG/KG	16SS160002	3/28	0.06 - 0.5
NA	NA	NA	NA	3.9	0.199	40321-76-4	1,2,3,7,8-PECDD	0.14	J	1.5	J	NG/KG	16SS320002	3/28	0.1 - 0.8
NA	NA	NA	NA	39	38.6	60851-34-5	2,3,4,6,7,8-HXCDF	0.12	J	0.75	J	NG/KG	16SS270002	5/28	0.05 - 0.4
NA	NA	NA	NA	39	38.6	51207-31-9	2,3,7,8-TCDF	0.51	J	0.75	J	NG/KG	16SS270002	2/28	0.05 - 0.4
NA	NA	NA	NA	NA	NA	37871-00-4	TOTAL HPCDD	2.3		302		NG/KG	16SS270002	27/28	3.3
NA	NA	NA	NA	NA	NA	38998-75-3	TOTAL HPCDF	0.48	J	27.5	J	NG/KG	16SS130002	12/28	0.08 - 1.4
NA	NA	NA	NA	9.4	NA	34465-46-8	TOTAL HXCDD	1.6		45.9		NG/KG	16SS270002	20/28	0.1 - 2
NA	NA	NA	NA	NA	NA	55684-94-1	TOTAL HXCDF	0.17		11.7	J	NG/KG	16SS270002	15/28	0.05 - 0.51
NA	NA	NA	NA	NA	NA	36088-22-9	TOTAL PECDD	0.34		4.4	J	NG/KG	16SS270002	5/28	0.1 - 0.8
NA	NA	NA	NA	NA	NA	30402-15-4	TOTAL PECDF	1.3	J	7.6	J	NG/KG	16SS130002	8/28	0.07 - 0.87
NA	NA	NA	NA	NA	NA	55722-27-5	TOTAL TCDF	0.26		13.3	J	NG/KG	16SS320002	6/28	0.05 - 7.9
							Inorganics								
NA	NA	NA	NA	76000	NA	7429-90-5	ALUMINUM	1780	J	23800	J	MG/KG	16SS110002	38/39	3610
0.27	NA	140	5.4	31	0.1423	7440-36-0	ANTIMONY	0.51	J	27.2	J	MG/KG	16SS140002	14/39	0.19 - 3.4
0.29	770	3.9	29	0.39	5.7	7440-38-2	ARSENIC	0.75	J	11.2	J	MG/KG	16SS300002	39/39	NA
82	710000	24000	1700	5400	1.04	7440-39-3	BARIUM	11.9	J	303	J	MG/KG	16SS130002	39/39	NA
32	1400	680	63	150	1.06	7440-41-7	BERYLLIUM	0.23	J	1.4	J	MG/KG	16SS170002	23/39	0.06 - 0.64
0.38	1800	12	7.5	37	0.00222	7440-43-9	CADMIUM	0.19	J	2.8	J	MG/KG	16SS150002	15/39	0.13 - 0.66
NA	NA	NA	NA	NA	NA	7440-70-2	CALCIUM	212	J	246000	J	MG/KG	16SS030002	36/39	152 - 236
2	280	NA	NA	30	0.4	7440-47-3	CHROMIUM	4.3	J	28.9	J	MG/KG	16SS110002	39/39	NA
NA	NA	NA	NA	900	0.14033	7440-48-4	COBALT	0.87	J	25.9	J	MG/KG	16SS170002	39/39	NA
560	NA	13000	580	3100	2.96	7440-50-8	COPPER	2.4	J	413	J	MG/KG	16SS150002	39/39	NA
NA	NA	NA	NA	23000	NA	7439-89-6	IRON	2170	J	43000	J	MG/KG	16SS200002	39/39	NA
NA	NA	400	81	400	0.05373	7439-92-1	LEAD	3.5	J	1240	J	MG/KG	16SS140002	38/39	14.8
NA	NA	NA	NA	1600	NA	7439-93-2	LITHIUM	0.81	J	21.5	J	MG/KG	16SS170002	37/39	4.3 - 5.6
NA	NA	NA	NA	NA	NA	7439-95-4	MAGNESIUM	105	J	62500	J	MG/KG	16SS030002	39/39	NA
110	69000	NA	NA	1800	NA	7439-96-5	MANGANESE	3.8	J	1040	J	MG/KG	16SS130002	39/39	NA
0.1	2.9	55	2.1	23	0.073	7439-97-6	MERCURY	0.015	J	0.22	J	MG/KG	16SS050002	24/39	0.002 - 0.021

APP[illegible]X B
FREQUENCY OF DETECTION TABLES
SURFACE SOIL - ROUND 1
SWMU 16 - B146 CAST HIGH EXPLOSIVES INCINERATOR
NSWC CRANE, INDIANA

SSLDAF1	SSLINH	IDCLRESD	IDCLRSGW	R9SORES	R5DQLSO	CAS Number	Chemical	Minimum Concentration	Minimum Qualifier	Maximum Concentration	Maximum Qualifier	Units	Sample Containing Maximum Concentration	Detection Frequency	Range of Nondetects
48	NA	6900	950	1600	13.6	7440-02-0	NICKEL	0.71	J	41.3	J	MG/KG	16SS170002	39/39	NA
NA	NA	NA	NA	NA	NA	7440-09-7	POTASSIUM	206	J	2240	J	MG/KG	16SS110002	39/39	NA
0.26	NA	1700	5.2	390	0.02765	7782-49-2	SELENIUM	0.16	J	0.31	J	MG/KG	16SS320002	2/39	0.03 - 0.54
1.6	NA	1700	31	390	4.04	7440-22-4	SILVER	0.28	J	0.28	J	MG/KG	16SS330002	1/39	0.02 - 0.26
NA	NA	NA	NA	NA	NA	7440-23-5	SODIUM	162	J	496	J	MG/KG	16SS030002	3/39	12.7 - 84.9
770	NA	NA	NA	47000	NA	7440-24-6	STRONTIUM	4.5	J	252	J	MG/KG	16SS030002	39/39	NA
0.04	NA	31	2.9	5.2	0.05692	7440-28-0	THALLIUM	0.16	J	0.32	J	MG/KG	16SS110002	2/39	0.03 - 0.26
NA	NA	NA	NA	47000	7.62	7440-31-5	TIN	0.25	J	12.3	J	MG/KG	16SS080002	6/39	0.32 - 2.4
NA	NA	NA	NA	NA	NA	7440-32-6	TITANIUM	7.5	J	348	J	MG/KG	16SS110002	39/39	NA
260	NA	NA	NA	550	1.59	7440-62-2	VANADIUM	3.6	J	52.8	J	MG/KG	16SS110002	39/39	NA
680	NA	100000	14000	23000	6.62	7440-66-6	ZINC	24	J	1560	J	MG/KG	16SS130002	26/39	5.2 - 2510
							Miscellaneous Parameters								
NA	NA	NA	NA	NA	NA	TTNUS014	CATION EXCHANGE CAPACITY	7.4		22		MEQ/1	16SS240002	7/7	NA
NA	NA	NA	NA	NA	NA	TTNUS002	PH	5.2		8		S.U.	16SS020002	7/7	NA
NA	NA	NA	NA	NA	NA	TTNUS003	TOTAL ORGANIC CARBON	1000	J	6200	J	MG/KG	16SS120002	6/7	1000

Associated Samples:

16SS010002
16SS020002
16SS030002
16SS040002
16SS050002
16SS060002
16SS070002
16SS080002
16SS090002
16SS100002
16SS110002
16SS120002
16SS130002
16SS140002
16SS150002
16SS160002
16SS170002
16SS180002
16SS190002
16SS200002
16SS210002
16SS220002
16SS230002
16SS240002
16SS250002
16SS260002
16SS270002
16SS280002
16SS290002
16SS300002
16SS310002
16SS320002
16SS330002
16SS340002
16SS350002
16SS360002
16SS370002
16SS380002
16SS390002

SWMU 16
SURFACE SOIL – ROUND 2

APPENDIX B
FREQUENCY OF DETECTION TABLES
SURFACE SOIL - ROUND 2
SWMU 16 - B146 CAST HIGH EXPLOSIVES INCINERATOR
NSWC CRANE, INDIANA

ssldaf1	sslinh	idclresd	idclrsgw	r9sores	r5dqlso	CAS Number	Chemical	Minimum Concentration	Minimum Qualifier	Maximum Concentration	Maximum Qualifier	Units	Sample Containing Maximum Concentration	Detection Frequency	Range of Nondetects
							Volatile Organic Compounds								
730	NA	3900000	3100	1600000	2500	67-64-1	ACETONE	3	J	71	J	UG/KG	16SS290002	8/39	1.1 - 8
20	NA	110000	400	43000	783.73	156-59-2	CIS-1,2-DICHLOROETHENE	2	J	23		UG/KG	16SS390002	2/39	1 - 1.3
28000	250000	NA	NA	94000	39500	75-71-8	DICHLORODIFLUOROMETHANE	10	J	10	J	UG/KG	16SS330002	1/39	1 - 1.3
180	1500000	11000000	3500	1700000	4690	100-42-5	STYRENE	1	J	1	J	UG/KG	16SS040002	1/39	1 - 1.3
590	650000	1700000	12000	520000	5450	108-88-3	TOLUENE	1	J	1	J	UG/KG	16SS160002	1/39	1 - 1.3
34	NA	180000	680	69000	783.73	156-60-5	TRANS-1,2-DICHLOROETHENE	1	J	2	J	UG/KG	16SS390002	4/39	1 - 1.3
34	NA	180000	680	69000	783.73	156-60-5	TRANS-1,2-DICHLOROETHENE	1	J	2	J	UG/KG	16SS030002	4/39	1 - 1.3
2.8	4600	45000	57	53	12400	79-01-6	TRICHLOROETHENE	2	J	86		UG/KG	16SS390002	4/39	1 - 1.3
8000	1100000	NA	NA	390000	16400	75-69-4	TRICHLOROFLUOROMETHANE	2	J	3	J	UG/KG	16SS330002	31/39	1 - 1.3
8000	1100000	NA	NA	390000	16400	75-69-4	TRICHLOROFLUOROMETHANE	2	J	3	J	UG/KG	16SS240002	31/39	1 - 1.3
8000	1100000	NA	NA	390000	16400	75-69-4	TRICHLOROFLUOROMETHANE	2	J	3	J	UG/KG	16SS230002	31/39	1 - 1.3
8000	1100000	NA	NA	390000	16400	75-69-4	TRICHLOROFLUOROMETHANE	2	J	3	J	UG/KG	16SS350002	31/39	1 - 1.3
8000	1100000	NA	NA	390000	16400	75-69-4	TRICHLOROFLUOROMETHANE	2	J	3	J	UG/KG	16SS290002	31/39	1 - 1.3
8000	1100000	NA	NA	390000	16400	75-69-4	TRICHLOROFLUOROMETHANE	2	J	3	J	UG/KG	16SS130002	31/39	1 - 1.3
7800	990000	1100000	2300	430000	12700	108-05-4	VINYL ACETATE	1	J	1	J	UG/KG	16SS190002	2/39	1 - 1.3
7800	990000	1100000	2300	430000	12700	108-05-4	VINYL ACETATE	1	J	1	J	UG/KG	16SS350002	2/39	1 - 1.3
							Semivolatile Organic Compounds								
NA	NA	3700000	16000	56000	3240	91-57-6	2-METHYLNAPHTHALENE	4	J	94		UG/KG	16SS030002	2/39	3.4 - 4.3
31000	NA	9500000	130000	3700000	682000	83-32-9	ACENAPHTHENE	5	J	1800		UG/KG	16SS030002	2/39	3.5 - 4.3
NA	NA	NA	NA	3700000	682000	208-96-8	ACENAPHTHYLENE	4	J	680		UG/KG	16SS030002	3/39	3.5 - 4.3
650000	NA	47000000	51000	22000000	1480000	120-12-7	ANTHRACENE	5	J	3500		UG/KG	16SS030002	4/39	3.5 - 4.3
80	NA	5100	19000	620	5210	56-55-3	BENZO(A)ANTHRACENE	4	J	9600		UG/KG	16SS030002	12/39	3.5 - 4.3
410	NA	510	8200	62	1520	50-32-8	BENZO(A)PYRENE	4	J	8400		UG/KG	16SS030002	13/39	3.5 - 4.3
200	NA	5100	57000	620	59800	205-99-2	BENZO(B)FLUORANTHENE	4	J	9200		UG/KG	16SS030002	16/39	3.5 - 4.2
NA	NA	NA	NA	2300000	119000	191-24-2	BENZO(G,H,I)PERYLENE	4	J	5100		UG/KG	16SS030002	12/39	3.5 - 4.3
2000	NA	51000	39000	6200	148000	207-08-9	BENZO(K)FLUORANTHENE	4	J	5000		UG/KG	16SS030002	11/39	3.5 - 4.3
180000	NA	310000	3600000	35000	925.94	117-81-7	BIS(2-ETHYLHEXYL)PHTHALATE	92	J	1200	BJ	UG/KG	16SS360002	9/39	69 - 730
8000	NA	510000	26000	62000	4730	218-01-9	CHRYSENE	4	J	11000		UG/KG	16SS030002	15/39	3.5 - 4.3
80	NA	510	18000	62	18400	53-70-3	DIBENZO(A,H)ANTHRACENE	8		1600		UG/KG	16SS030002	3/39	3.5 - 4.3
2400	NA	730000	9700	290000	NA	132-64-9	DIBENZOFURAN	560	J	560	J	UG/KG	16SS030002	1/39	69 - 87
310000	NA	6300000	880000	2300000	122000	206-44-0	FLUORANTHENE	4	J	19000		UG/KG	16SS030002	15/39	3.5 - 4.3
41000	NA	6300000	170000	2600000	122000	86-73-7	FLUORENE	4	J	2300		UG/KG	16SS030002	4/39	3.5 - 4.3
700	NA	5100	3100	620	109000	193-39-5	INDENO(1,2,3-CD)PYRENE	5	J	4400		UG/KG	16SS030002	10/39	3.5 - 4.3
3100	170000	3200000	700	56000	99.39	91-20-3	NAPHTHALENE	4	J	180		UG/KG	16SS030002	3/39	3.4 - 4.3
NA	NA	NA	NA	2300000	45700	85-01-8	PHENANTHRENE	4	J	8700		UG/KG	16SS030002	8/39	3.5 - 4.3
230000	NA	5500000	570000	2300000	78500	129-00-0	PYRENE	4	J	35000		UG/KG	16SS030002	17/39	3.5 - 4.3
NA	NA	NA	NA	NA	403.98	94-59-7	SAFROLE	340	J	15000		UG/KG	16SS130002	5/39	69 - 150
							Herbicides								
570000	NA	NA	NA	18000	198.78	70-30-4	HEXACHLOROPHENE	2.6	J	2.6	J	UG/KG	16SS030002	1/39	0.62 - 1.1
1.4	NA	20000	28	3000	119.27	87-86-5	PENTACHLOROPHENOL	0.79	J	14		UG/KG	16SS050002	4/39	0.46 - 0.58

APPENDIX B
FREQUENCY OF DETECTION TABLES
SURFACE SOIL - ROUND 2
SWMU 16 - B146 CAST HIGH EXPLOSIVES INCINERATOR
NSWC CRANE, INDIANA

ssldaf1	sslinh	idclresd	idclrsgw	r9sores	r5dqlso	CAS Number	Chemical	Minimum Concentration	Minimum Qualifier	Maximum Concentration	Maximum Qualifier	Units	Sample Containing Maximum Concentration	Detection Frequency	Range of Nondetects
							Explosives								
NA	NA	NA	NA	3100	NA	2691-41-0	HMX	0.34	J	0.34	J	MG/KG	16SS330002	1/39	0.25 - 0.25
							Dioxins								
NA	NA	NA	NA	39000	0.199	3268-87-9	1,2,3,4,6,7,8,9-OCDD	49.4		11500		NG/KG	16SS330002	26/28	89.4 - 815
NA	NA	NA	NA	39000	38.6	39001-02-0	1,2,3,4,6,7,8,9-OCDF	0.62	J	20.1		NG/KG	16SS130002	9/28	0.2 - 2.6
NA	NA	NA	NA	390	0.199	35822-46-9	1,2,3,4,6,7,8-HPCDD	1.1	J	151		NG/KG	16SS060002	27/28	1.5 - 1.5
NA	NA	NA	NA	390	38.6	67562-39-4	1,2,3,4,6,7,8-HPCDF	0.33	J	8		NG/KG	16SS130002	10/28	0.07 - 6.2
NA	NA	NA	NA	390	38.6	55673-89-7	1,2,3,4,7,8,9-HPCDF	1.8	J	1.8	J	NG/KG	16SS130002	1/28	0.08 - 1.2
NA	NA	NA	NA	39	0.199	39227-28-6	1,2,3,4,7,8-HXCDD	0.2	J	1.5	J	NG/KG	16SS270002	6/28	0.1 - 0.82
NA	NA	NA	NA	39	38.6	70648-26-9	1,2,3,4,7,8-HXCDF	0.17	J	0.98	J	NG/KG	16SS130002	9/28	0.05 - 0.44
NA	NA	NA	NA	39	0.199	57653-85-7	1,2,3,6,7,8-HXCDD	0.27	J	2.5	J	NG/KG	16SS270002	8/28	0.09 - 0.92
NA	NA	NA	NA	39	38.6	57117-44-9	1,2,3,6,7,8-HXCDF	0.24	J	0.64	J	NG/KG	16SS130002	4/28	0.04 - 0.4
3200	2500000	NA	NA	39	0.199	19408-74-3	1,2,3,7,8,9-HXCDD	0.47	J	4.7	J	NG/KG	16SS270002	14/28	0.1 - 1.1
NA	NA	NA	NA	39	38.6	72918-21-9	1,2,3,7,8,9-HXCDF	0.25	J	0.81	J	NG/KG	16SS160002	3/28	0.06 - 0.5
NA	NA	NA	NA	3.9	0.199	40321-76-4	1,2,3,7,8-PECDD	0.14	J	1.5	J	NG/KG	16SS320002	3/28	0.1 - 0.8
NA	NA	NA	NA	39	38.6	60851-34-5	2,3,4,6,7,8-HXCDF	0.12	J	0.75	J	NG/KG	16SS270002	5/28	0.05 - 0.4
NA	NA	NA	NA	39	38.6	51207-31-9	2,3,7,8-TCDF	0.51	J	0.75	J	NG/KG	16SS270002	2/28	0.05 - 0.4
NA	NA	NA	NA	NA	NA	37871-00-4	TOTAL HPCDD	2.3		302		NG/KG	16SS270002	27/28	3.3 - 3.3
NA	NA	NA	NA	NA	NA	38998-75-3	TOTAL HPCDF	0.48	J	27.5	J	NG/KG	16SS130002	12/28	0.08 - 1.4
NA	NA	NA	NA	9.4	NA	34465-46-8	TOTAL HXCDD	1.6		45.9		NG/KG	16SS270002	20/28	0.1 - 2
NA	NA	NA	NA	NA	NA	55684-94-1	TOTAL HXCDF	0.17		11.7	J	NG/KG	16SS270002	15/28	0.05 - 0.51
NA	NA	NA	NA	NA	NA	36088-22-9	TOTAL PECDD	0.34		4.4	J	NG/KG	16SS270002	5/28	0.1 - 0.8
NA	NA	NA	NA	NA	NA	30402-15-4	TOTAL PECDF	1.3	J	7.6	J	NG/KG	16SS130002	8/28	0.07 - 0.87
NA	NA	NA	NA	NA	NA	55722-27-5	TOTAL TCDF	0.26		13.3	J	NG/KG	16SS320002	6/28	0.05 - 7.9
							Inorganics								
NA	NA	NA	NA	76000	NA	7429-90-5	ALUMINUM	1780	J	23800	J	MG/KG	16SS110002	43/44	3610 - 3610
0.27	NA	140	5.4	31	0.1423	7440-36-0	ANTIMONY	0.51	J	27.2	J	MG/KG	16SS140002	19/44	0.19 - 3.4
0.29	770	3.9	29	0.39	5.7	7440-38-2	ARSENIC	0.75	J	11.2	J	MG/KG	16SS300002	44/44	NA
82	710000	24000	1700	5400	1.04	7440-39-3	BARIUM	11.9	J	303	J	MG/KG	16SS130002	44/44	NA
32	1400	680	63	150	1.06	7440-41-7	BERYLLIUM	0.23	J	1.4	J	MG/KG	16SS170002	23/44	0.06 - 0.87
0.38	1800	12	7.5	37	0.00222	7440-43-9	CADMIUM	0.19	J	2.8	J	MG/KG	16SS150002	16/44	0.13 - 1
NA	NA	NA	NA	NA	NA	7440-70-2	CALCIUM	212	J	246000	J	MG/KG	16SS030002	41/44	152 - 236
2	280	NA	NA	30	0.4	7440-47-3	CHROMIUM	4.3	J	28.9	J	MG/KG	16SS110002	44/44	NA
NA	NA	NA	NA	900	0.14033	7440-48-4	COBALT	0.87	J	25.9	J	MG/KG	16SS170002	44/44	NA
560	NA	13000	580	3100	2.96	7440-50-8	COPPER	2.4	J	413	J	MG/KG	16SS150002	44/44	NA
NA	NA	NA	NA	23000	NA	7439-89-6	IRON	2170	J	43000	J	MG/KG	16SS200002	44/44	NA
NA	NA	400	81	400	0.05373	7439-92-1	LEAD	3.5	J	1240	J	MG/KG	16SS140002	43/44	14.8 - 14.8
NA	NA	NA	NA	1600	NA	7439-93-2	LITHIUM	0.81	J	21.5	J	MG/KG	16SS170002	37/39	4.3 - 5.6
NA	NA	NA	NA	NA	NA	7439-95-4	MAGNESIUM	105	J	62500	J	MG/KG	16SS030002	44/44	NA
110	69000	NA	NA	1800	NA	7439-96-5	MANGANESE	3.8	J	1040	J	MG/KG	16SS130002	44/44	NA
0.1	2.9	55	2.1	23	0.073	7439-97-6	MERCURY	0.015	J	0.22	J	MG/KG	16SS050002	29/44	0.002 - 0.021

APPENDIX B
FREQUENCY OF DETECTION TABLES
SURFACE SOIL - ROUND 2
SWMU 16 - B146 CAST HIGH EXPLOSIVES INCINERATOR
NSWC CRANE, INDIANA

ssldaf1	sslinh	idclresd	idclrsgw	r9sores	r5dqlso	CAS Number	Chemical	Minimum Concentration	Minimum Qualifier	Maximum Concentration	Maximum Qualifier	Units	Sample Containing Maximum Concentration	Detection Frequency	Range of Nondetects
48	NA	6900	950	1600	13.6	7440-02-0	NICKEL	0.71	J	41.3	J	MG/KG	16SS170002	44/44	NA
NA	NA	NA	NA	NA	NA	7440-09-7	POTASSIUM	206	J	2240	J	MG/KG	16SS110002	44/44	NA
0.26	NA	1700	5.2	390	0.02765	7782-49-2	SELENIUM	0.16	J	0.31	J	MG/KG	16SS320002	2/44	0.03 - 0.82
1.6	NA	1700	31	390	4.04	7440-22-4	SILVER	0.28	J	0.28	J	MG/KG	16SS330002	1/44	0.02 - 0.26
NA	NA	NA	NA	NA	NA	7440-23-5	SODIUM	162	J	496	J	MG/KG	16SS030002	4/44	12.7 - 84.9
770	NA	NA	NA	47000	NA	7440-24-6	STRONTIUM	4.5	J	252	J	MG/KG	16SS030002	39/39	NA
0.04	NA	31	2.9	5.2	0.05692	7440-28-0	THALLIUM	0.16	J	0.32	J	MG/KG	16SS110002	2/44	0.03 - 0.32
NA	NA	NA	NA	47000	7.62	7440-31-5	TIN	0.25	J	12.3	J	MG/KG	16SS080002	8/44	0.32 - 2.4
NA	NA	NA	NA	NA	NA	7440-32-6	TITANIUM	7.5	J	348	J	MG/KG	16SS110002	44/44	NA
260	NA	NA	NA	550	1.59	7440-62-2	VANADIUM	3.6	J	52.8	J	MG/KG	16SS110002	44/44	NA
680	NA	100000	14000	23000	6.62	7440-66-6	ZINC	24	J	1840	J	MG/KG	16SS420002	31/44	5.2 - 2510
							Miscellaneous Parameters								
NA	NA	NA	NA	NA	NA	TTNUS014	CATION EXCHANGE CAPACITY	7.4		22		MEQ/1	16SS240002	7/7	NA
NA	NA	NA	NA	NA	NA	TTNUS002	PH	5.2		8		S.U.	16SS020002	7/7	NA
NA	NA	NA	NA	NA	NA	TTNUS003	TOTAL ORGANIC CARBON	1000	J	6200	J	MG/KG	16SS120002	6/7	1000 - 1000

Associated Samples:

16SS010002	16SS160002	16SS310002
16SS020002	16SS170002	16SS320002
16SS030002	16SS180002	16SS330002
16SS040002	16SS190002	16SS340002
16SS050002	16SS200002	16SS350002
16SS060002	16SS210002	16SS360002
16SS070002	16SS220002	16SS370002
16SS080002	16SS230002	16SS380002
16SS090002	16SS240002	16SS390002
16SS100002	16SS250002	16SS420002
16SS110002	16SS260002	16SS430002
16SS120002	16SS270002	16SS440002
16SS130002	16SS280002	16SS450002
16SS140002	16SS290002	16SS460002
16SS150002	16SS300002	

SWMU 16
SUBSURFACE SOIL – ROUND 1

APPENDIX B
FREQUENCY OF DETECTION TABLES
SUBSURFACE SOIL - ROUND 1
SWMU 16 - B146 CAST HIGH EXPLOSIVES INCINERATOR
NSWC CRANE, INDIANA

SSLDAF1	SSLINH	IDCLRESD	IDCLRSGW	R9SORES	R5DQLSO	CAS Number	Chemical	Minimum Concentration	Minimum Qualifier	Maximum Concentration	Maximum Qualifier	Units	Sample Containing Maximum Concentration	Detection Frequency	Range of Nondetects
							Volatiles								
730	NA	3900000	3100	1600000	2500	67-64-1	ACETONE	4	J	14	J	UG/KG	16SB410507	2/9	1.1 - 1.2
20	NA	110000	400	43000	783.73	156-59-2	CIS-1,2-DICHLOROETHENE	200		200		UG/KG	16SB390203	1/9	1.1 - 1.2
34	NA	180000	680	69000	783.73	156-60-5	TRANS-1,2-DICHLOROETHENE	12		12		UG/KG	16SB390203	1/9	1.1 - 1.2
2.8	4600	45000	57	53	12400	79-01-6	TRICHLOROETHENE	4		280		UG/KG	16SB390203	2/9	1.1 - 1.2
8000	1100000	NA	NA	390000	16400	75-69-4	TRICHLOROFLUOROMETHANE	2	J	2	J	UG/KG	16SB010406	7/9	1.2
8000	1100000	NA	NA	390000	16400	75-69-4	TRICHLOROFLUOROMETHANE	2	J	2	J	UG/KG	16SB020406	7/9	1.2
8000	1100000	NA	NA	390000	16400	75-69-4	TRICHLOROFLUOROMETHANE	2	J	2	J	UG/KG	16SB380203	7/9	1.2
8000	1100000	NA	NA	390000	16400	75-69-4	TRICHLOROFLUOROMETHANE	2	J	2	J	UG/KG	16SB390203	7/9	1.2
8000	1100000	NA	NA	390000	16400	75-69-4	TRICHLOROFLUOROMETHANE	2	J	2	J	UG/KG	16SB400506	7/9	1.2
8000	1100000	NA	NA	390000	16400	75-69-4	TRICHLOROFLUOROMETHANE	2	J	2	J	UG/KG	16SB400608	7/9	1.2
8000	1100000	NA	NA	390000	16400	75-69-4	TRICHLOROFLUOROMETHANE	2	J	2	J	UG/KG	16SB410507	7/9	1.2
							Semivolatiles								
NA	NA	3700000	16000	56000	3240	91-57-6	2-METHYLNAPHTHALENE	4	J	4	J	UG/KG	16SB410507	1/27	3.5 - 4.1
80	NA	5100	19000	620	5210	56-55-3	BENZO(A)ANTHRACENE	4	J	7	J	UG/KG	16SB340203	2/27	3.5 - 4.1
410	NA	510	8200	62	1520	50-32-8	BENZO(A)PYRENE	6	J	10		UG/KG	16SB340203	2/27	3.5 - 4.1
200	NA	5100	57000	620	59800	205-99-2	BENZO(B)FLUORANTHENE	8	J	16	J	UG/KG	16SB340203	2/27	3.5 - 4.1
NA	NA	NA	NA	2300000	119000	191-24-2	BENZO(G,H,I)PERYLENE	6	J	6	J	UG/KG	16SB340203	1/27	3.5 - 4.1
2000	NA	51000	39000	6200	148000	207-08-9	BENZO(K)FLUORANTHENE	6	J	13		UG/KG	16SB340203	2/27	3.5 - 4.1
180000	NA	310000	3600000	35000	925.94	117-81-7	BIS(2-ETHYLHEXYL)PHTHALATE	86	J	1400		UG/KG	16SB410507	3/27	70 - 1000
8000	NA	510000	26000	62000	4730	218-01-9	CHRYSENE	6	J	10		UG/KG	16SB340203	3/27	3.5 - 4.1
310000	NA	6300000	880000	2300000	122000	206-44-0	FLUORANTHENE	6	J	9		UG/KG	16SB340203	2/27	3.5 - 4.1
700	NA	5100	3100	620	109000	193-39-5	INDENO(1,2,3-CD)PYRENE	6	J	6	J	UG/KG	16SB340203	1/27	3.5 - 4.1
NA	NA	NA	NA	NA	9940	120-58-1	ISOSAFROLE	150	J	150	J	UG/KG	16SB410507	1/27	70 - 83
3100	170000	3200000	700	56000	99.39	91-20-3	NAPHTHALENE	5	J	6	J	UG/KG	16SB410507	2/27	3.5 - 4.1
NA	NA	NA	NA	2300000	45700	85-01-8	PHENANTHRENE	6	J	6	J	UG/KG	16SB410507	1/27	3.5 - 4.1
230000	NA	5500000	570000	2300000	78500	129-00-0	PYRENE	6	J	12		UG/KG	16SB340203	3/27	3.5 - 4.1
NA	NA	NA	NA	NA	403.98	94-59-7	SAFROLE	480		67000		UG/KG	16SB410507	2/27	70 - 83
							Herbicides								
570000	NA	NA	NA	18000	198.78	70-30-4	HEXACHLOROPHENE	0.96	J	0.96	J	UG/KG	16SB260204	1/27	0.68 - 1
1.4	NA	20000	28	3000	119.27	87-86-5	PENTACHLOROPHENOL	1.6	J	1.6	J	UG/KG	16SB300203	1/27	0.47 - 0.56
							Inorganics								
NA	NA	NA	NA	76000	NA	7429-90-5	ALUMINUM	1540	J	18600	J	MG/KG	16SB410305	27/27	NA
0.27	NA	140	5.4	31	0.1423	7440-36-0	ANTIMONY	0.33	J	0.62	J	MG/KG	16SB360203	3/27	0.14 - 1.5
0.29	770	3.9	29	0.39	5.7	7440-38-2	ARSENIC	0.35	J	10.2	J	MG/KG	16SB320204	27/27	NA
82	710000	24000	1700	5400	1.04	7440-39-3	BARIUM	9.1	J	119	J	MG/KG	16SB320204	27/27	NA
32	1400	680	63	150	1.06	7440-41-7	BERYLLIUM	0.2	J	2.4	J	MG/KG	16SB180203	12/27	0.17 - 0.53
0.38	1800	12	7.5	37	0.00222	7440-43-9	CADMIUM	0.19	J	0.74	J	MG/KG	16SB180203	7/27	0.09 - 0.28
NA	NA	NA	NA	NA	NA	7440-70-2	CALCIUM	68.7	J	2150	J	MG/KG	16SB340203	25/27	192 - 380
2	280	NA	NA	30	0.4	7440-47-3	CHROMIUM	5.1	J	25.1	J	MG/KG	16SB130204	27/27	NA

APPENDIX B
FREQUENCY OF DETECTION TABLES
SUBSURFACE SOIL - ROUND 1
SWMU 16 - B146 CAST HIGH EXPLOSIVES INCINERATOR
NSWC CRANE, INDIANA

SSLDAF1	SSLINH	IDCLRESD	IDCLRSGW	R9SORES	R5DQLSO	CAS Number	Chemical	Minimum Concentration	Minimum Qualifier	Maximum Concentration	Maximum Qualifier	Units	Sample Containing Maximum Concentration	Detection Frequency	Range of Nondetects
NA	NA	NA	NA	900	0.14033	7440-48-4	COBALT	0.54	J	15.7	J	MG/KG	16SB170204	27/27	NA
560	NA	13000	580	3100	2.96	7440-50-8	COPPER	3.6	J	34.8	J	MG/KG	16SB180203	27/27	NA
NA	NA	NA	NA	23000	NA	7439-89-6	IRON	3630	J	30300	J	MG/KG	16SB410507	27/27	NA
NA	NA	400	81	400	0.05373	7439-92-1	LEAD	3.4	J	34	J	MG/KG	16SB360203	26/27	7.9
NA	NA	NA	NA	1600	NA	7439-93-2	LITHIUM	3.4	J	23.6	J	MG/KG	16SB170204	18/27	2 - 6.3
NA	NA	NA	NA	NA	NA	7439-95-4	MAGNESIUM	279	J	2620	J	MG/KG	16SB410305	27/27	NA
110	69000	NA	NA	1800	NA	7439-96-5	MANGANESE	3.2	J	415	J	MG/KG	16SB390203	27/27	NA
0.1	2.9	55	2.1	23	0.073	7439-97-6	MERCURY	0.003	J	0.079	J	MG/KG	16SB180203	15/27	0.002 - 0.012
48	NA	6900	950	1600	13.6	7440-02-0	NICKEL	2	J	35.6	J	MG/KG	16SB170204	27/27	NA
NA	NA	NA	NA	NA	NA	7440-09-7	POTASSIUM	225	J	2070	J	MG/KG	16SB130204	27/27	NA
0.26	NA	1700	5.2	390	0.02765	7782-49-2	SELENIUM	0.22	J	0.63	J	MG/KG	16SB180203	2/27	0.02 - 0.38
1.6	NA	1700	31	390	4.04	7440-22-4	SILVER	0.42	J	0.42	J	MG/KG	16SB340203	1/27	0.02 - 0.14
NA	NA	NA	NA	NA	NA	7440-23-5	SODIUM	50.5	J	50.5	J	MG/KG	16SB320204	1/27	13.9 - 75.8
770	NA	NA	NA	47000	NA	7440-24-6	STRONTIUM	2.8	J	21.8	J	MG/KG	16SB130204	27/27	NA
NA	NA	NA	NA	47000	7.62	7440-31-5	TIN	0.31	J	1.3	J	MG/KG	16SB320204	5/27	0.22 - 0.67
NA	NA	NA	NA	NA	NA	7440-32-6	TITANIUM	12.2	J	177	J	MG/KG	16SB410305	27/27	NA
260	NA	NA	NA	550	1.59	7440-62-2	VANADIUM	2.9	J	33.9	J	MG/KG	16SB410305	27/27	NA
680	NA	100000	14000	23000	6.62	7440-66-6	ZINC	10.2	J	83.3	J	MG/KG	16SB360203	19/27	4.5 - 39.7
							Miscellaneous Parameters								
NA	NA	NA	NA	NA	NA	TTNUS014	CATION EXCHANGE CAPACITY	15		25		MEQ/1	16SB120204	6/6	NA
NA	NA	NA	NA	NA	NA	TTNUS002	PH	4.9		7.5		S.U.	16SB410305	6/6	NA
NA	NA	NA	NA	NA	NA	TTNUS003	TOTAL ORGANIC CARBON	1400	J	14000	J	MG/KG	16SB180203	6/6	NA

Associated Samples:

16SB010406	16SB280203
16SB020406	16SB290203
16SB110204	16SB300203
16SB120204	16SB320204
16SB130204	16SB330204
16SB170204	16SB340203
16SB180203	16SB360203
16SB190203	16SB380203
16SB220203	16SB390203
16SB230203	16SB400506
16SB240203	16SB400608
16SB250203	16SB410305
16SB260204	16SB410507
16SB270203	

SWMU 16
SUBSURFACE SOIL – ROUND 2

APPENDIX B
FREQUENCY OF DETECTION TABLES
SUBSURFACE SOIL - ROUND 2
SWMU 16 - B146 CAST HIGH EXPLOSIVES INCINERATOR
NSWC CRANE, INDIANA

ssldaf1	ssilnh	idclresd	idclrsgw	r9sores	r5dqlso	CAS Number	Chemical	Minimum Concentration	Minimum Qualifier	Maximum Concentration	Maximum Qualifier	Units	Sample Containing Maximum Concentration	Detection Frequency	Range of Nondetects
							Volatile Organic Compounds								
730	NA	3900000	3100	1600000	2500	67-64-1	ACETONE	4	J	14	J	UG/KG	16SB410507	3/13	0.978 - 1.2
20	NA	110000	400	43000	783.73	156-59-2	CIS-1,2-DICHLOROETHENE	22		200		UG/KG	16SB390203	2/13	0.814 - 1.2
28000	250000	NA	NA	94000	39500	75-71-8	DICHLORODIFLUOROMETHANE	79	J	170		UG/KG	16SB470405	4/13	1.1 - 1.2
71000	NA	4800000	190000	270000	10000	1330-20-7	TOTAL XYLENES	1	J	2	J	UG/KG	16SB490405	4/13	1.1 - 1.2
71000	NA	4800000	190000	270000	10000	1330-20-7	TOTAL XYLENES	1	J	2	J	UG/KG	16SB480203	4/13	1.1 - 1.2
71000	NA	4800000	190000	270000	10000	1330-20-7	TOTAL XYLENES	1	J	2	J	UG/KG	16SB470405	4/13	1.1 - 1.2
34	NA	180000	680	69000	783.73	156-60-5	TRANS-1,2-DICHLOROETHENE	1	J	12		UG/KG	16SB390203	2/13	0.814 - 1.2
2.8	4600	45000	57	53	12400	79-01-6	TRICHLOROETHENE	4		280		UG/KG	16SB390203	6/13	1.1 - 1.2
8000	1100000	NA	NA	390000	16400	75-69-4	TRICHLOROFLUOROMETHANE	2	J	2	J	UG/KG	16SB020406	7/13	0.814 - 1.2
8000	1100000	NA	NA	390000	16400	75-69-4	TRICHLOROFLUOROMETHANE	2	J	2	J	UG/KG	16SB010406	7/13	0.814 - 1.2
8000	1100000	NA	NA	390000	16400	75-69-4	TRICHLOROFLUOROMETHANE	2	J	2	J	UG/KG	16SB390203	7/13	0.814 - 1.2
8000	1100000	NA	NA	390000	16400	75-69-4	TRICHLOROFLUOROMETHANE	2	J	2	J	UG/KG	16SB400608	7/13	0.814 - 1.2
8000	1100000	NA	NA	390000	16400	75-69-4	TRICHLOROFLUOROMETHANE	2	J	2	J	UG/KG	16SB400506	7/13	0.814 - 1.2
8000	1100000	NA	NA	390000	16400	75-69-4	TRICHLOROFLUOROMETHANE	2	J	2	J	UG/KG	16SB410507	7/13	0.814 - 1.2
8000	1100000	NA	NA	390000	16400	75-69-4	TRICHLOROFLUOROMETHANE	2	J	2	J	UG/KG	16SB380203	7/13	0.814 - 1.2
							Semivolatile Organic Compounds								
NA	NA	3700000	16000	56000	3240	91-57-6	2-METHYLNAPHTHALENE	4	J	4	J	UG/KG	16SB410507	1/27	3.5 - 4.1
80	NA	5100	19000	620	5210	56-55-3	BENZO(A)ANTHRACENE	4	J	7	J	UG/KG	16SB340203	2/27	3.5 - 4.1
410	NA	510	8200	62	1520	50-32-8	BENZO(A)PYRENE	6	J	10		UG/KG	16SB340203	2/27	3.5 - 4.1
200	NA	5100	57000	620	59800	205-99-2	BENZO(B)FLUORANTHENE	8	J	16	J	UG/KG	16SB340203	2/27	3.5 - 4.1
NA	NA	NA	NA	2300000	119000	191-24-2	BENZO(G,H,I)PERYLENE	6	J	6	J	UG/KG	16SB340203	1/27	3.5 - 4.1
2000	NA	51000	39000	6200	148000	207-08-9	BENZO(K)FLUORANTHENE	6	J	13		UG/KG	16SB340203	2/27	3.5 - 4.1
180000	NA	310000	3600000	35000	925.94	117-81-7	BIS(2-ETHYLHEXYL)PHTHALATE	86	J	1400	BJ	UG/KG	16SB400506	3/27	70 - 1000
8000	NA	510000	26000	62000	4730	218-01-9	CHRYSENE	6	J	10		UG/KG	16SB340203	3/27	3.5 - 4.1
310000	NA	6300000	880000	2300000	122000	206-44-0	FLUORANTHENE	6	J	9		UG/KG	16SB340203	2/27	3.5 - 4.1
700	NA	5100	3100	620	109000	193-39-5	INDENO(1,2,3-CD)PYRENE	6	J	6	J	UG/KG	16SB340203	1/27	3.5 - 4.1
NA	NA	NA	NA	NA	9940	120-58-1	ISOSAFROLE	150	J	150	J	UG/KG	16SB410507	1/27	70 - 83
3100	170000	3200000	700	56000	99.39	91-20-3	NAPHTHALENE	5	J	6	J	UG/KG	16SB410507	2/27	3.5 - 4.1
NA	NA	NA	NA	2300000	45700	85-01-8	PHENANTHRENE	6	J	6	J	UG/KG	16SB410507	1/27	3.5 - 4.1
230000	NA	5500000	570000	2300000	78500	129-00-0	PYRENE	6	J	12		UG/KG	16SB340203	3/27	3.5 - 4.1
NA	NA	NA	NA	NA	403.98	94-59-7	SAFROLE	480		67000		UG/KG	16SB410507	2/27	70 - 83
							Herbicides								
570000	NA	NA	NA	18000	198.78	70-30-4	HEXACHLOROPHENE	0.96	J	0.96	J	UG/KG	16SB260204	1/27	0.68 - 1
1.4	NA	20000	28	3000	119.27	87-86-5	PENTACHLOROPHENOL	1.6	J	1.6	J	UG/KG	16SB300203	1/27	0.47 - 0.56
							Inorganics								
NA	NA	NA	NA	76000	NA	7429-90-5	ALUMINUM	1540	J	18600	J	MG/KG	16SB410305	27/27	NA
0.27	NA	140	5.4	31	0.1423	7440-36-0	ANTIMONY	0.33	J	0.62	J	MG/KG	16SB360203	3/27	0.14 - 1.5
0.29	770	3.9	29	0.39	5.7	7440-38-2	ARSENIC	0.35	J	10.2	J	MG/KG	16SB320204	27/27	NA
82	710000	24000	1700	5400	1.04	7440-39-3	BARIUM	9.1	J	119	J	MG/KG	16SB320204	27/27	NA

APPENDIX B
FREQUENCY OF DETECTION TABLES
SUBSURFACE SOIL - ROUND 2
SWMU 16 - B146 CAST HIGH EXPLOSIVES INCINERATOR
NSWC CRANE, INDIANA

ssldaf1	sslinh	idclresd	idclrsgw	r9sores	r5dqlso	CAS Number	Chemical	Minimum Concentration	Minimum Qualifier	Maximum Concentration	Maximum Qualifier	Units	Sample Containing Maximum Concentration	Detection Frequency	Range of Nondetects
32	1400	680	63	150	1.06	7440-41-7	BERYLLIUM	0.2	J	2.4	J	MG/KG	16SB180203	12/27	0.17 - 0.53
0.38	1800	12	7.5	37	0.00222	7440-43-9	CADMIUM	0.19	J	0.74	J	MG/KG	16SB180203	7/27	0.09 - 0.28
NA	NA	NA	NA	NA	NA	7440-70-2	CALCIUM	68.7	J	2150	J	MG/KG	16SB340203	25/27	192 - 380
2	280	NA	NA	30	0.4	7440-47-3	CHROMIUM	5.1	J	25.1	J	MG/KG	16SB130204	27/27	NA
NA	NA	NA	NA	900	0.14033	7440-48-4	COBALT	0.54	J	15.7	J	MG/KG	16SB170204	27/27	NA
560	NA	13000	580	3100	2.96	7440-50-8	COPPER	3.6	J	34.8	J	MG/KG	16SB180203	27/27	NA
NA	NA	NA	NA	23000	NA	7439-89-6	IRON	3630	J	30300	J	MG/KG	16SB410507	27/27	NA
NA	NA	400	81	400	0.05373	7439-92-1	LEAD	3.4	J	34	J	MG/KG	16SB360203	26/27	7.9 - 7.9
NA	NA	NA	NA	1600	NA	7439-93-2	LITHIUM	3.4	J	23.6	J	MG/KG	16SB170204	18/27	2 - 6.3
NA	NA	NA	NA	NA	NA	7439-95-4	MAGNESIUM	279	J	2620	J	MG/KG	16SB410305	27/27	NA
110	69000	NA	NA	1800	NA	7439-96-5	MANGANESE	3.2	J	415	J	MG/KG	16SB390203	27/27	NA
0.1	2.9	55	2.1	23	0.073	7439-97-6	MERCURY	0.003	J	0.079	J	MG/KG	16SB180203	15/27	0.002 - 0.012
48	NA	6900	950	1600	13.6	7440-02-0	NICKEL	2	J	35.6	J	MG/KG	16SB170204	27/27	NA
NA	NA	NA	NA	NA	NA	7440-09-7	POTASSIUM	225	J	2070	J	MG/KG	16SB130204	27/27	NA
0.26	NA	1700	5.2	390	0.02765	7782-49-2	SELENIUM	0.22	J	0.63	J	MG/KG	16SB180203	2/27	0.02 - 0.38
1.6	NA	1700	31	390	4.04	7440-22-4	SILVER	0.42	J	0.42	J	MG/KG	16SB340203	1/27	0.02 - 0.14
NA	NA	NA	NA	NA	NA	7440-23-5	SODIUM	50.5	J	50.5	J	MG/KG	16SB320204	1/27	13.9 - 75.8
770	NA	NA	NA	47000	NA	7440-24-6	STRONTIUM	2.8	J	21.8	J	MG/KG	16SB130204	27/27	NA
NA	NA	NA	NA	47000	7.62	7440-31-5	TIN	0.31	J	1.3	J	MG/KG	16SB320204	5/27	0.22 - 0.67
NA	NA	NA	NA	NA	NA	7440-32-6	TITANIUM	12.2	J	177	J	MG/KG	16SB410305	27/27	NA
260	NA	NA	NA	550	1.59	7440-62-2	VANADIUM	2.9	J	33.9	J	MG/KG	16SB410305	27/27	NA
680	NA	100000	14000	23000	6.62	7440-66-6	ZINC	10.2	J	83.3	J	MG/KG	16SB360203	19/27	4.5 - 39.7
							Miscellaneous Parameters								
NA	NA	NA	NA	NA	NA	TTNUS014	CATION EXCHANGE CAPACITY	15		25		MEQ/1	16SB120204	6/6	NA
NA	NA	NA	NA	NA	NA	TTNUS002	PH	4.9		7.5		S.U.	16SB410305	6/6	NA
NA	NA	NA	NA	NA	NA	TTNUS003	TOTAL ORGANIC CARBON	1400	J	14000	J	MG/KG	16SB180203	6/6	NA

Associated Samples:

16SB010406	16SB300203
16SB020406	16SB320204
16SB110204	16SB330204
16SB120204	16SB340203
16SB130204	16SB360203
16SB170204	16SB380203
16SB180203	16SB390203
16SB190203	16SB400506
16SB220203	16SB400608
16SB230203	16SB410305
16SB240203	16SB410507
16SB250203	16SB470405

APPENDIX B
FREQUENCY OF DETECTION TABLES
SUBSURFACE SOIL - ROUND 2
SWMU 16 - B146 CAST HIGH EXPLOSIVES INCINERATOR
NSWC CRANE, INDIANA

ssldaf1	sslinh	idclresd	idclrsgw	r9sores	r5dqlso	CAS Number	Chemical	Minimum Concentration	Minimum Qualifier	Maximum Concentration	Maximum Qualifier	Units	Sample Containing Maximum Concentration	Detection Frequency	Range of Nondetects
							16SB260204	16SB480203							
							16SB270203	16SB490405							
							16SB280203	16SB500103							
							16SB290203								

SWMU 16
SEDIMENT – ROUND 1

APPENDIX B
FREQUENCY OF DETECTION TABLES
SEDIMENT - ROUND 1
SWMU 16 - B146 CAST HIGH EXPLOSIVES INCINERATOR
NSWC CRANE, INDIANA

IDCLRESD	R9SORES	R5DQLSD	CAS Number	Chemical	Minimum Concentration	Minimum Qualifier	Maximum Concentration	Maximum Qualifier	Units	Sample Containing Maximum Concentration	Detection Frequency	Range of Nondetects
				Semivolatiles								
3700000	56000	3240	91-57-6	2-METHYLNAPHTHALENE	5	J	5	J	UG/KG	16SD030004	1/9	4 - 5.8
9500000	3700000	682000	83-32-9	ACENAPHTHENE	8	J	8	J	UG/KG	16SD050004	1/9	3.9 - 5.8
NA	3700000	682000	208-96-8	ACENAPHTHYLENE	4	J	8		UG/KG	16SD030004	3/9	4.1 - 5.8
47000000	22000000	1480000	120-12-7	ANTHRACENE	5	J	15		UG/KG	16SD050004	4/9	3.9 - 4.4
5100	620	5210	56-55-3	BENZO(A)ANTHRACENE	5	J	66		UG/KG	16SD050004	7/9	4.3 - 4.4
510	62	1520	50-32-8	BENZO(A)PYRENE	7	J	84		UG/KG	16SD050004	6/9	3.9 - 4.4
5100	620	59800	205-99-2	BENZO(B)FLUORANTHENE	6	J	120		UG/KG	16SD050004	7/9	3.9 - 4.4
NA	2300000	119000	191-24-2	BENZO(G,H,I)PERYLENE	5	J	65		UG/KG	16SD050004	7/9	4.3 - 4.4
51000	6200	148000	207-08-9	BENZO(K)FLUORANTHENE	7	J	65		UG/KG	16SD050004	6/9	3.9 - 4.4
510000	62000	4730	218-01-9	CHRYSENE	5	J	100		UG/KG	16SD050004	8/9	4.4
18000000	6100000	149.79	84-74-2	DI-N-BUTYL PHTHALATE	130	J	130	J	UG/KG	16SD080004	1/9	79 - 120
510	62	18400	53-70-3	DIBENZO(A,H)ANTHRACENE	18		18		UG/KG	16SD050004	1/9	3.9 - 5.8
NA	1500000	1010	122-39-4	DIPHENYLAMINE	140	J	170	J	UG/KG	16SD030004	2/9	82 - 120
6300000	2300000	122000	206-44-0	FLUORANTHENE	5	J	160		UG/KG	16SD050004	9/9	NA
6300000	2600000	122000	86-73-7	FLUORENE	8	J	8	J	UG/KG	16SD050004	1/9	3.9 - 5.8
5100	620	109000	193-39-5	INDENO(1,2,3-CD)PYRENE	7	J	55		UG/KG	16SD050004	6/9	4.1 - 4.4
3200000	56000	99.39	91-20-3	NAPHTHALENE	5	J	6	J	UG/KG	16SD030004	2/9	4.1 - 5.8
NA	2300000	45700	85-01-8	PHENANTHRENE	4	J	100		UG/KG	16SD050004	8/9	4.3
5500000	2300000	78500	129-00-0	PYRENE	6	J	170		UG/KG	16SD050004	9/9	NA
				Explosives								
NA	4.4	NA	121-82-4	RDX	0.27	J	0.27	J	MG/KG	16SD030004	1/9	0.25
				Herbicides								
20000	3000	119.27	87-86-5	PENTACHLOROPHENOL	2.6	J	19	J	UG/KG	16SD110004	5/9	0.55 - 0.6
				Inorganics								
NA	76000	NA	7429-90-5	ALUMINUM	5560		12900	J	MG/KG	16SD040004	9/9	NA
140	31	0.1423	7440-36-0	ANTIMONY	4.3	J	174	J	MG/KG	16SD060004	9/9	NA
3.9	0.39	5.7	7440-38-2	ARSENIC	3.4	J	14.1	J	MG/KG	16SD100004	9/9	NA
24000	5400	1.04	7440-39-3	BARIUM	143	J	2820	J	MG/KG	16SD030004	9/9	NA
680	150	1.06	7440-41-7	BERYLLIUM	0.43	J	0.88	J	MG/KG	16SD100004	8/9	0.39
12	37	0.00222	7440-43-9	CADMIUM	0.8	J	19.5	J	MG/KG	16SD060004	9/9	NA
NA	NA	NA	7440-70-2	CALCIUM	1480	J	59800	J	MG/KG	16SD050004	9/9	NA
NA	30	0.4	7440-47-3	CHROMIUM	13.3	J	68.5	J	MG/KG	16SD100004	9/9	NA
NA	900	0.14033	7440-48-4	COBALT	3.4	J	14	J	MG/KG	16SD100004	9/9	NA
13000	3100	2.96	7440-50-8	COPPER	68.7	J	2570	J	MG/KG	16SD060004	9/9	NA
NA	23000	NA	7439-89-6	IRON	18200	J	65100	J	MG/KG	16SD100004	9/9	NA
400	400	0.05373	7439-92-1	LEAD	229	J	15200	J	MG/KG	16SD060004	9/9	NA

APPENDIX B
FREQUENCY OF DETECTION TABLES
SEDIMENT - ROUND 1
SWMU 16 - B146 CAST HIGH EXPLOSIVES INCINERATOR
NSWC CRANE, INDIANA

IDCLRESD	R9SORES	R5DQLSD	CAS Number	Chemical	Minimum Concentration	Minimum Qualifier	Maximum Concentration	Maximum Qualifier	Units	Sample Containing Maximum Concentration	Detection Frequency	Range of Nondetects
NA	1600	NA	7439-93-2	LITHIUM	2.9	J	10.4	J	MG/KG	16SD040004	9/9	NA
NA	NA	NA	7439-95-4	MAGNESIUM	677	J	6080	J	MG/KG	16SD050004	9/9	NA
NA	1800	NA	7439-96-5	MANGANESE	175	J	976	J	MG/KG	16SD110004	9/9	NA
55	23	0.073	7439-97-6	MERCURY	0.08	J	2.7	J	MG/KG	16SD030004	9/9	NA
6900	1600	13.6	7440-02-0	NICKEL	10.6	J	22.5	J	MG/KG	16SD110004	9/9	NA
NA	NA	NA	7440-09-7	POTASSIUM	282	J	645	J	MG/KG	16SD040004	9/9	NA
1700	390	0.02765	7782-49-2	SELENIUM	0.33	J	0.9	J	MG/KG	16SD110004	7/9	0.14 - 0.17
NA	NA	NA	7440-23-5	SODIUM	160	J	160	J	MG/KG	16SD110004	1/9	11.7 - 44
NA	47000	NA	7440-24-6	STRONTIUM	51	J	2740	J	MG/KG	16SD030004	9/9	NA
NA	47000	7.62	7440-31-5	TIN	1.1	J	19	J	MG/KG	16SD060004	9/9	NA
NA	NA	NA	7440-32-6	TITANIUM	9.4	J	156	J	MG/KG	16SD040004	9/9	NA
NA	550	1.59	7440-62-2	VANADIUM	12.8	J	48.9	J	MG/KG	16SD100004	9/9	NA
100000	23000	6.62	7440-66-6	ZINC	573	J	23400	J	MG/KG	16SD030004	9/9	NA
				AVS/SEM								
NA	NA	NA	TTNUS010	ACID VOLATILE SULFIDE	0.53		0.59		UMO/G	16SD090004	3/3	NA
NA	NA	NA	7440-43-9	CADMIUM	0.024	J	0.145	J	UMO/G	16SD060004	3/3	NA
NA	NA	NA	7440-50-8	COPPER	1.83		18.3		UMO/G	16SD060004	3/3	NA
NA	NA	NA	7439-92-1	LEAD	2.6		16.3		UMO/G	16SD060004	3/3	NA
NA	NA	NA	7439-97-6	MERCURY	0.00011		0.00015		UMO/G	16SD090004	3/3	NA
NA	NA	NA	7440-02-0	NICKEL	0.028		0.068		UMO/G	16SD060004	3/3	NA
NA	NA	NA	TTNUS305	SEM/AVS	50		220		S.U.	16SD060004	3/3	NA
NA	NA	NA	7440-66-6	ZINC	20.6	J	91	J	UMO/G	16SD060004	3/3	NA
				Miscellaneous Parameters								
NA	NA	NA	TTNUS014	CATION EXCHANGE CAPACITY	5.7	J	25	J	MEQ/1	16SD020004	3/3	NA
NA	NA	NA	TTNUS002	PH	7.4		8		S.U.	16SD060004	3/3	NA
NA	NA	NA	TTNUS003	TOTAL ORGANIC CARBON	1600		8600		MG/KG	16SD020004	3/3	NA

Associated Samples:
16SD020004
16SD030004
16SD040004
16SD050004
16SD060004
16SD080004
16SD090004
16SD100004
16SD110004

SWMU 16
SEDIMENT – ROUND 2

AF[illegible]DIX B
FREQUENCY OF DETECTION TABLES
SEDIIMENT - ROUND 2
SWMU 16 - B146 CAST HIGH EXPLOSIVES INCINERATOR
NSWC CRANE, INDIANA

idclresd	r9sores	r5dqlsd	CAS Number	Chemical	Minimum Concentration	Minimum Qualifier	Maximum Concentration	Maximum Qualifier	Units	Sample Containing Maximum Concentration	Detection Frequency	Range of Nondetects
				Volatile Organic Compounds								
3900000	1600000	453.37	67-64-1	ACETONE	3	J	69	J	UG/KG	16SD220004	8/11	1.1 - 1.3
110000	43000	208.94	156-59-2	CIS-1,2-DICHLOROETHENE	3	J	3	J	UG/KG	16SD120004	1/11	1 - 1.58
NA	94000	1.33	75-71-8	DICHLORODIFLUOROMETHANE	22		22		UG/KG	16SD190004	1/11	1.1 - 1.58
45000	53	179.56	79-01-6	TRICHLOROETHENE	2	J	2	J	UG/KG	16SD120004	1/11	1 - 1.58
				Semivolatile Organic Compounds								
3700000	56000	20.2	91-57-6	2-METHYLNAPHTHALENE	5	J	5	J	UG/KG	16SD030004	1/10	4 - 5.8
9500000	3700000	6.71	83-32-9	ACENAPHTHENE	8	J	8	J	UG/KG	16SD050004	1/10	3.9 - 5.8
NA	3700000	5.87	208-96-8	ACENAPHTHYLENE	4	J	8		UG/KG	16SD030004	3/10	4.1 - 5.8
47000000	22000000	46.9	120-12-7	ANTHRACENE	5	J	15		UG/KG	16SD050004	4/10	3.9 - 4.6
5100	620	31.7	56-55-3	BENZO(A)ANTHRACENE	5	J	66		UG/KG	16SD050004	8/10	4.3 - 4.4
510	62	31.9	50-32-8	BENZO(A)PYRENE	7	J	84		UG/KG	16SD050004	6/10	3.9 - 4.6
5100	620	10400	205-99-2	BENZO(B)FLUORANTHENE	6	J	120		UG/KG	16SD050004	7/10	3.9 - 4.6
NA	2300000	170	191-24-2	BENZO(G,H,I)PERYLENE	5	J	65		UG/KG	16SD050004	7/10	4.3 - 4.6
51000	6200	240	207-08-9	BENZO(K)FLUORANTHENE	7	J	65		UG/KG	16SD050004	6/10	3.9 - 4.6
510000	62000	57.1	218-01-9	CHRYSENE	5	J	100		UG/KG	16SD050004	8/10	4.4 - 4.6
18000000	6100000	110.5	84-74-2	DI-N-BUTYL PHTHALATE	130	J	130	J	UG/KG	16SD080004	1/9	79 - 120
510	62	6.22	53-70-3	DIBENZO(A,H)ANTHRACENE	18		18		UG/KG	16SD050004	1/10	3.9 - 5.8
NA	1500000	34.6	122-39-4	DIPHENYLAMINE	140	J	170	J	UG/KG	16SD030004	2/9	82 - 120
6300000	2300000	111.3	206-44-0	FLUORANTHENE	5	J	160		UG/KG	16SD050004	9/10	4.6 - 4.6
6300000	2600000	21.2	86-73-7	FLUORENE	8	J	8	J	UG/KG	16SD050004	1/10	3.9 - 5.8
5100	620	200	193-39-5	INDENO(1,2,3-CD)PYRENE	7	J	55		UG/KG	16SD050004	6/10	4.1 - 4.6
3200000	56000	34.6	91-20-3	NAPHTHALENE	5	J	6	J	UG/KG	16SD030004	2/10	4.1 - 5.8
NA	2300000	41.9	85-01-8	PHENANTHRENE	4	J	100		UG/KG	16SD050004	8/10	4.3 - 4.6
5500000	2300000	53	129-00-0	PYRENE	6	J	170		UG/KG	16SD050004	9/10	4.6 - 4.6
				Herbicides								
20000	3000	30100	87-86-5	PENTACHLOROPHENOL	2.6	J	19	J	UG/KG	16SD110004	5/9	0.55 - 0.6
				Explosives								
NA	61	0.02062	606-20-2	2,6-DINITROTOLUENE	0.54	J	0.92	J	MG/KG	16SD150004	2/19	0.25 - 0.25
NA	4.4	NA	121-82-4	RDX	0.27	J	0.27	J	MG/KG	16SD030004	1/19	0.25 - 0.25
				Inorganics								
NA	76000	NA	7429-90-5	ALUMINUM	5560		13700	J	MG/KG	16SD150004	19/19	NA
140	31	NA	7440-36-0	ANTIMONY	0.65	J	174	J	MG/KG	16SD060004	19/19	NA
3.9	0.39	5.9	7440-38-2	ARSENIC	3.4	J	34.8	J	MG/KG	16SD180004	19/19	NA
24000	5400	NA	7440-39-3	BARIUM	62.5	J	2820	J	MG/KG	16SD030004	19/19	NA
680	150	NA	7440-41-7	BERYLLIUM	0.43	J	3	J	MG/KG	16SD200004	18/19	0.39 - 0.39
12	37	0.596	7440-43-9	CADMIUM	0.38	J	19.5	J	MG/KG	16SD060004	19/19	NA
NA	NA	NA	7440-70-2	CALCIUM	362	J	59800	J	MG/KG	16SD050004	19/19	NA

APPENDIX B
FREQUENCY OF DETECTION TABLES
SEDIIMENT - ROUND 2
SWMU 16 - B146 CAST HIGH EXPLOSIVES INCINERATOR
NSWC CRANE, INDIANA

idclresd	r9sores	r5dqlsd	CAS Number	Chemical	Minimum Concentration	Minimum Qualifier	Maximum Concentration	Maximum Qualifier	Units	Sample Containing Maximum Concentration	Detection Frequency	Range of Nondetects
NA	30	26	7440-47-3	CHROMIUM	13.3	J	85	J	MG/KG	16SD200004	19/19	NA
NA	900	50	7440-48-4	COBALT	3.4	J	41.2	J	MG/KG	16SD120004	19/19	NA
13000	3100	16	7440-50-8	COPPER	12.6	J	2570	J	MG/KG	16SD060004	19/19	NA
NA	23000	NA	7439-89-6	IRON	18200	J	141000	J	MG/KG	16SD200004	19/19	NA
400	400	31	7439-92-1	LEAD	19.7	J	15200	J	MG/KG	16SD060004	19/19	NA
NA	1600	NA	7439-93-2	LITHIUM	2.9	J	10.4	J	MG/KG	16SD040004	9/9	NA
NA	NA	NA	7439-95-4	MAGNESIUM	292	J	6080	J	MG/KG	16SD050004	19/19	NA
NA	1800	NA	7439-96-5	MANGANESE	175	J	3650	J	MG/KG	16SD200004	19/19	NA
55	23	0.174	7439-97-6	MERCURY	0.022	J	2.7	J	MG/KG	16SD030004	19/19	NA
6900	1600	16	7440-02-0	NICKEL	10.6	J	58	J	MG/KG	16SD130004	19/19	NA
NA	NA	NA	7440-09-7	POTASSIUM	282	J	1130	J	MG/KG	16SD170004	19/19	NA
1700	390	NA	7782-49-2	SELENIUM	0.33	J	1.5	J	MG/KG	16SD130004	17/19	0.14 - 0.17
NA	NA	NA	7440-23-5	SODIUM	33.8	J	160	J	MG/KG	16SD110004	5/19	9.8 - 44
NA	47000	NA	7440-24-6	STRONTIUM	51	J	2740	J	MG/KG	16SD030004	9/9	NA
31	5.2	NA	7440-28-0	THALLIUM	0.48	J	0.48	J	MG/KG	16SD200004	1/19	0.06 - 0.26
NA	47000	NA	7440-31-5	TIN	0.4	J	19	J	MG/KG	16SD060004	10/19	0.17 - 1.8
NA	NA	NA	7440-32-6	TITANIUM	9.4	J	156	J	MG/KG	16SD040004	19/19	NA
NA	550	NA	7440-62-2	VANADIUM	12.8	J	71.7	J	MG/KG	16SD130004	19/19	NA
100000	23000	120	7440-66-6	ZINC	74.9	J	23400	J	MG/KG	16SD030004	19/19	NA
				AVS/SEM								
NA	NA	NA	TTNUS010	ACID VOLATILE SULFIDE	0.53		0.59		UMO/G	16SD090004	3/3	NA
NA	NA	NA	7440-43-9	CADMIUM	0.024	J	0.145	J	UMO/G	16SD060004	3/3	NA
NA	NA	NA	7440-50-8	COPPER	1.83		18.3		UMO/G	16SD060004	3/3	NA
NA	NA	NA	7439-92-1	LEAD	2.6		16.3		UMO/G	16SD060004	3/3	NA
NA	NA	NA	7439-97-6	MERCURY	0.00011		0.00015		UMO/G	16SD090004	3/3	NA
NA	NA	NA	7440-02-0	NICKEL	0.028		0.068		UMO/G	16SD060004	3/3	NA
NA	NA	NA	TTNUS305	SEM/AVS	50		220		S.U.	16SD060004	3/3	NA
NA	NA	NA	7440-66-6	ZINC	20.6	J	91	J	UMO/G	16SD060004	3/3	NA
				Miscellaneous Parameters								
NA	NA	NA	TTNUS014	CATION EXCHANGE CAPACITY	5.7	J	25	J	MEQ/1	16SD020004	3/3	NA
NA	NA	NA	TTNUS002	PH	7.4		8		S.U.	16SD060004	3/3	NA
NA	NA	NA	TTNUS003	TOTAL ORGANIC CARBON	1600		8600		MG/KG	16SD020004	3/3	NA

Associated Samples:

16SD020004	16SD130004
16SD030004	16SD140004
16SD040004	16SD150004
16SD050004	16SD160004

AP[illegible]IX B
FREQUENCY OF DETECTION TABLES
SEDIIMENT - ROUND 2
SWMU 16 - B146 CAST HIGH EXPLOSIVES INCINERATOR
NSWC CRANE, INDIANA

idclresd	r9sores	r5dqlsd	CAS Number	Chemical	Minimum Concentration	Minimum Qualifier	Maximum Concentration	Maximum Qualifier	Units	Sample Containing Maximum Concentration	Detection Frequency	Range of Nondetects
				16SD060004	16SD170004							
				16SD080004	16SD180004							
				16SD090004	16SD190004							
				16SD100004	16SD200004							
				16SD110004	16SD210004							
				16SD120004	16SD220004							

SWMU 16
SURFACE WATER – ROUND 1

NDIX B
FREQUENCY OF DETECTION TABLES
SURFACE WATER - ROUND 1
SWMU 16 - B146 CAST HIGH EXPLOSIVES INCINERATOR
NSWC CRANE, INDIANA

FEDMCL	FEDSMCL	IDCLRGDF	R9TAPW	R5DQLSW	CAS Number	Chemical	Minimum Concentration	Minimum Qualifier	Maximum Concentration	Maximum Qualifier	Units	Sample Containing Maximum Concentration	Detection Frequency	Range of Nondetects
						Semivolatile Organics								
NA	NA	150	6.2	329.55	91-57-6	2-METHYLNAPHTHALENE	0.67	J	0.67	J	UG/L	16SW0101	1/3	0.05
NA	NA	460	370	9.9	83-32-9	ACENAPHTHENE	0.9	J	0.9	J	UG/L	16SW0101	1/3	0.05
NA	NA	43	1800	0.029	120-12-7	ANTHRACENE	0.31	J	0.31	J	UG/L	16SW0101	1/3	0.05
NA	NA	1.2	0.092	0.839	56-55-3	BENZO(A)ANTHRACENE	0.31	J	0.31	J	UG/L	16SW0101	1/3	0.05
6	NA	6	4.8	2.1	117-81-7	BIS(2-ETHYLHEXYL)PHTHALATE	86		86		UG/L		1/3	2 - 3
NA	NA	1.6	9.2	0.033	218-01-9	CHRYSENE	0.78	J	0.78	J	UG/L	16SW0101	1/3	0.05
NA	NA	210	1500	8.1	206-44-0	FLUORANTHENE	1.09	J	1.09	J	UG/L	16SW0101	1/3	0.05
NA	NA	310	240	3.9	86-73-7	FLUORENE	0.59	J	0.59	J	UG/L	16SW0101	1/3	0.05
NA	NA	8.3	6.2	44	91-20-3	NAPHTHALENE	1.3	J	1.3	J	UG/L	16SW0101	1/3	0.05
NA	NA	NA	180	2.1	85-01-8	PHENANTHRENE	1.26	J	1.26	J	UG/L	16SW0101	1/3	0.05
NA	NA	140	180	0.3	129-00-0	PYRENE	2.34	J	2.34	J	UG/L	16SW0101	1/3	0.05
						Explosives								
NA	NA	NA	2.2	NA	118-96-7	2,4,6-TRINITROTOLUENE	2.1		2.1		UG/L	16SW0701	1/3	0.455 - 0.8
NA	NA	NA	NA	NA	35572-78-2	2-AMINO-4,6-DINITROTOLUENE	0.89	J	0.89	J	UG/L	16SW0701	1/3	0.455 - 0.8
NA	NA	NA	NA	NA	19406-51-0	4-AMINO-2,6-DINITROTOLUENE	2.2	J	2.2	J	UG/L	16SW0701	1/3	0.455 - 0.8
NA	NA	NA	1800	NA	2691-41-0	HMX	1.5	J	29000		UG/L	16SW0101	2/3	0.55
NA	NA	NA	0.61	NA	121-82-4	RDX	2.9		88000		UG/L	16SW0101	3/3	NA
						Herbicides								
NA	NA	NA	11	0.228	70-30-4	HEXACHLOROPHENE	0.082	J	0.082	J	UG/L	16SW0101	1/3	0.025
1	NA	1	0.56	5.23	87-86-5	PENTACHLOROPHENOL	0.02	J	0.19	J	UG/L	16SW0101	2/2	NA
						Total Inorganics								
NA	50	NA	36000	NA	7429-90-5	ALUMINUM	298	J	298	J	UG/L	16SW0701	1/3	7.6 - 82.4
10	NA	50	0.045	53	7440-38-2	ARSENIC	2.9	J	3.4	J	UG/L	16SW0201	2/3	0.38
2000	NA	2000	2600	5000	7440-39-3	BARIUM	66.3	J	91	J	UG/L	16SW0201	3/3	NA
NA	NA	NA	NA	NA	7440-70-2	CALCIUM	30300	J	37100	J	UG/L	16SW0701	3/3	NA
100	NA	NA	110	42	7440-47-3	CHROMIUM	2	J	3.4	J	UG/L	16SW0201	2/3	0.25
1300	1000	1300	1500	5	7440-50-8	COPPER	2	J	17.2	J	UG/L	16SW0201	3/3	NA
NA	300	NA	11000	NA	7439-89-6	IRON	60.5	J	60.5	J	UG/L	16SW0101	1/3	77.1 - 194
15	NA	15	NA	1.3	7439-92-1	LEAD	4.6	J	13.1	J	UG/L	16SW0201	2/3	0.15
NA	NA	NA	NA	NA	7439-95-4	MAGNESIUM	5190	J	6560	J	UG/L	16SW0701	3/3	NA
2	NA	2	11	0.0013	7439-97-6	MERCURY	2		2		UG/L	16SW0101	1/3	0.02
NA	NA	730	730	29	7440-02-0	NICKEL	0.95	J	1.8	J	UG/L	16SW0101	2/3	0.61
NA	NA	NA	NA	NA	7440-09-7	POTASSIUM	839	J	2430	J	UG/L	16SW0701	3/3	NA
NA	NA	NA	NA	NA	7440-23-5	SODIUM	12400	J	84800	J	UG/L	16SW0701	3/3	NA
NA	NA	NA	22000	NA	7440-24-6	STRONTIUM	190	J	226	J	UG/L	16SW0701	3/3	NA
NA	NA	NA	NA	NA	7440-32-6	TITANIUM	2.2	J	10.2	J	UG/L	16SW0701	2/3	0.24
NA	NA	NA	260	19	7440-62-2	VANADIUM	1.2	J	1.2	J	UG/L	16SW0701	1/3	0.05 - 0.39
NA	5000	11000	11000	58.9	7440-66-6	ZINC	80.1	J	178	J	UG/L	16SW0201	2/3	3.2
						Dissolved Inorganics								
NA	50	NA	36000	NA	7429-90-5	ALUMINUM	575		575		UG/L	16SW0101-F	1/3	22.3 - 49.4
10	NA	50	0.045	53	7440-38-2	ARSENIC	2.8	J	3.2	J	UG/L	16SW0201-F	2/3	0.6

APPENDIX B
FREQUENCY OF DETECTION TABLES
SURFACE WATER - ROUND 1
SWMU 16 - B146 CAST HIGH EXPLOSIVES INCINERATOR
NSWC CRANE, INDIANA

FEDMCL	FEDSMCL	IDCLRGDF	R9TAPW	R5DQLSW	CAS Number	Chemical	Minimum Concentration	Minimum Qualifier	Maximum Concentration	Maximum Qualifier	Units	Sample Containing Maximum Concentration	Detection Frequency	Range of Nondetects
2000	NA	2000	2600	5000	7440-39-3	BARIUM	70.5	J	91.5	J	UG/L	16SW0201-F	3/3	NA
5	NA	5	18	0.66	7440-43-9	CADMIUM	3.3	J	3.3	J	UG/L	16SW0101-F	1/3	0.15 - 0.4
NA	NA	NA	NA	NA	7440-70-2	CALCIUM	29200	J	37700	J	UG/L	16SW0701-F	3/3	NA
100	NA	NA	110	42	7440-47-3	CHROMIUM	1.5	J	3.2	J	UG/L	16SW0201-F	3/3	NA
1300	1000	1300	1500	5	7440-50-8	COPPER	9.1	J	17.9	J	UG/L	16SW0101-F	3/3	NA
NA	300	NA	11000	NA	7439-89-6	IRON	4100	J	4100	J	UG/L	16SW0101-F	1/3	36.6 - 42.3
15	NA	15	NA	1.3	7439-92-1	LEAD	8.4	J	26.2	J	UG/L	16SW0101-F	2/3	1.9
NA	NA	NA	NA	NA	7439-95-4	MAGNESIUM	5310	J	6560	J	UG/L	16SW0701-F	3/3	NA
NA	50	NA	880	NA	7439-96-5	MANGANESE	10.1	J	23.4	J	UG/L	16SW0101-F	2/3	2.8
NA	NA	730	730	29	7440-02-0	NICKEL	0.84	J	2.2	J	UG/L	16SW0101-F	2/3	0.5
NA	NA	NA	NA	NA	7440-09-7	POTASSIUM	842	J	2370	J	UG/L	16SW0701-F	3/3	NA
NA	NA	NA	NA	NA	7440-23-5	SODIUM	12100	J	87000	J	UG/L	16SW0701-F	3/3	NA
NA	NA	NA	22000	NA	7440-24-6	STRONTIUM	196	J	234	J	UG/L	16SW0701-F	3/3	NA
NA	NA	NA	NA	NA	7440-32-6	TITANIUM	3.2	J	3.9	J	UG/L	16SW0101-F	2/3	1.3
NA	5000	11000	11000	58.9	7440-66-6	ZINC	68	J	170	J	UG/L	16SW0201-F	3/3	NA
						Miscellaneous Parameters								
NA	NA	NA	NA	NA	TTNUS493	AMMONIA-N	2.8	J	2.8	J	MG/L	16SW0101	1/3	0.01
NA	NA	NA	NA	NA	TTNUS494	NITRITE/NITRATE-N	0.22		3.3	J	MG/L	16SW0101	3/3	NA
						Field Parameters								
NA	NA	NA	NA	NA	TTNUS034	DISSOLVED OXYGEN	10.51		10.63		MG/L	16SW0701	2/2	NA
NA	NA	NA	NA	NA	TTNUS033	OXIDATION REDUCTION POTENTIAL	89.1		90.9		MV	16SW0201	2/2	NA
NA	0	NA	NA	NA	TTNUS002	PH	8.13		8.4		S.U.	16SW0701	2/2	NA
NA	NA	NA	NA	NA	TTNUS038	SPECIFIC CONDUCTANCE	0.281		0.591		MS/CM	16SW0701	2/2	NA
NA	NA	NA	NA	NA	TTNUS047	TEMPERATURE	9.14		11.78		C	16SW0701	2/2	NA
NA	NA	NA	NA	NA	TTNUS023	TURBIDITY	2.1		4.2		NTU	16SW0701	2/2	NA

Associated Samples:
16SW0101
16SW0101-F
16SW0201
16SW0201-F
16SW0701
16SW0701-F

SWMU 16
SURFACE WATER – ROUND 2

APPENDIX B
FREQUENCY OF DETECTION TABLES
SURFACE WATER - ROUND 2
SWMU 16 - B146 CAST HIGH EXPLOSIVES INCINERATOR
NSWC CRANE, INDIANA
PAGE 1 OF 2

CAS Number	Chemical	Minimum Concentration	Minimum Qualifier	Maximum Concentration	Maximum Qualifier	Units	Sample Containing Maximum Concentration	Detection Frequency	Range of Nondetects
	Volatile Organic Compounds								
67-64-1	ACETONE	0.6	J	0.6	J	UG/L	16SW2001	1/7	0.5 - 0.5
67-66-3	CHLOROFORM	2.4		2.4		UG/L	16SW0202	1/11	0.3 - 0.3
156-59-2	CIS-1,2-DICHLOROETHENE	1.4		7.1		UG/L	16SW0202	3/11	0.3 - 0.3
79-01-6	TRICHLOROETHENE	3.3		15		UG/L	16SW1201	4/11	0.3 - 0.3
	Explosives								
2691-41-0	HMX	0.27	J	0.51	J	UG/L	16SW1501	2/8	0.25 - 0.26
121-82-4	RDX	0.29	J	0.29	J	UG/L	16SW1501	1/8	0.25 - 0.26
	Total Inorganics								
7429-90-5	ALUMINUM	378	J	9510	J	UG/L	16SW1501	5/8	32.9 - 87.6
7440-38-2	ARSENIC	3.8	J	3.8	J	UG/L	16SW1501	1/8	0.16 - 0.57
7440-39-3	BARIUM	23	J	150	J	UG/L	16SW1501	8/8	NA
7440-70-2	CALCIUM	9930	J	49500	J	UG/L	16SW1501	8/8	NA
7440-47-3	CHROMIUM	0.78	J	11.8	J	UG/L	16SW1501	3/8	0.41 - 1.3
7440-48-4	COBALT	0.86	J	4.6	J	UG/L	16SW1501	3/8	0.15 - 0.48
7440-50-8	COPPER	2.7	J	5.9	J	UG/L	16SW1501	3/8	0.72 - 1.7
7439-89-6	IRON	263	J	9990	J	UG/L	16SW1501	5/8	15 - 47.7
7439-92-1	LEAD	4.8	J	5.2	J	UG/L	16SW1301	2/8	0.26 - 0.64
7439-95-4	MAGNESIUM	2460	J	9450	J	UG/L	16SW1501	8/8	NA
7439-96-5	MANGANESE	19.2	J	443	J	UG/L	16SW1501	6/8	9.1 - 10
7440-02-0	NICKEL	1.1	J	11.2	J	UG/L	16SW1501	5/8	0.61 - 1.3
7440-09-7	POTASSIUM	790	J	3860	J	UG/L	16SW1501	8/8	NA
7440-23-5	SODIUM	5080	J	17400	J	UG/L	16SW1501	8/8	NA
7440-32-6	TITANIUM	2	J	156	J	UG/L	16SW1501	7/8	0.52 - 0.52
7440-62-2	VANADIUM	0.63	J	19	J	UG/L	16SW1501	4/8	0.33 - 1.6
7440-66-6	ZINC	16.6	J	120		UG/L	16SW1301	4/8	4.9 - 12.3
	Dissolved Inorganics								
7429-90-5	ALUMINUM	63.7	J	164	J	UG/L	16SW2101-F	3/8	10.8 - 54.4
7440-39-3	BARIUM	46.6	J	76.4	J	UG/L	16SW1501-F	8/8	NA

APPENDIX B
FREQUENCY OF DETECTION TABLES
SURFACE WATER - ROUND 2
SWMU 16 - B146 CAST HIGH EXPLOSIVES INCINERATOR
NSWC CRANE, INDIANA

CAS Number	Chemical	Minimum Concentration	Minimum Qualifier	Maximum Concentration	Maximum Qualifier	Units	Sample Containing Maximum Concentration	Detection Frequency	Range of Nondetects
7440-70-2	CALCIUM	10100	J	49100	J	UG/L	16SW1501-F	8/8	NA
7440-48-4	COBALT	2.6	J	3.1	J	UG/L	16SW2101-F	7/8	0.11 - 0.11
7439-95-4	MAGNESIUM	3770	J	8870	J	UG/L	16SW1501-F	8/8	NA
7439-96-5	MANGANESE	10.9	J	171	J	UG/L	16SW1201-F	7/8	9.7 - 9.7
7439-97-6	MERCURY	0.04	J	0.04	J	UG/L	16SW1501-F	1/8	0.02 - 0.02
7440-02-0	NICKEL	1.2	J	4.3	J	UG/L	16SW1301-F	4/8	0.74 - 1.4
7440-09-7	POTASSIUM	846	J	2170	J	UG/L	16SW1501-F	8/8	NA
7440-23-5	SODIUM	4360	J	17800	J	UG/L	16SW1501-F	8/8	NA
7440-32-6	TITANIUM	1.4	J	8.5	J	UG/L	16SW2101-F	5/8	0.1 - 1.1
7440-66-6	ZINC	3.1	J	82.2		UG/L	16SW1301-F	5/8	3.5 - 13.8
	Miscellaneous Parameters								
TTNUS494	NITRITE/NITRATE-N	0.07		3.2		MG/L	16SW1401	4/8	0.05 - 0.05
	Field Parameters								
TTNUS186	DISSOLVED OXYGEN - METER	1.91		12.65		MG/L	16SW0102	11/11	NA
TTNUS033	OXIDATION REDUCTION POTENTIAL	68.3		254.7		MV	16SW1401	11/11	NA
TTNUS002	PH	6.39		7.68		S.U.	16SW0702	11/11	NA
TTNUS038	SPECIFIC CONDUCTANCE	0.108		0.575		MS/CM	16SW0702	11/11	NA
TTNUS047	TEMPERATURE	6.92		15.12		C	16SW2101	11/11	NA
TTNUS023	TURBIDITY	1		120		NTU	16SW0202	11/11	NA

APPENDIX C

FIELD STANDARD OPERATING PROCEDURES

APPENDIX C

FIELD SOP TABLE OF CONTENTS

CTO166-01	Sample Labeling
CTO166-02	Sample Identification Nomenclature
CTO166-03	Sample Custody and Documentation of Field Activities
CTO166-04	Borehole Advancement and Soil Coring Using Direct-Push Technology and Hand Auger Techniques
CTO166-05	Monitoring Well Sampling
CTO166-06	Calibration and Use of Photoionization Detector
CTO166-07	Borehole and Soil Sample Logging
CTO166-08	Surface and Subsurface Soil Sampling
CTO166-09	Inspection and Rehabilitation of Existing Monitoring Wells
CTO166-10	Monitoring Well Development
CTO166-11	Drilling and Geologic Logging of Boreholes in Rock
CTO166-12	Monitoring Well Installation
CTO166-13	Calibration and Care of Water Quality Meters
CTO166-14	Management of Investigation-Derived Waste
CTO166-15	Low-Flow Well Purging and Stabilization
CTO166-16	Decontamination of Field Sampling Equipment
CTO166-17	Measurement of Water Levels in Monitoring Wells
CTO166-18	Surface Water Sampling
CTO166-19	Sediment Sampling
CTO166-20	Estimating Flow in Small Streams
CTO166-21	Hydraulic Conductivity Testing
CTO166-22	Field Test Kit Analyses
CTO166-23	Bladder Pump Installation and Removal
CTO166-24	Plant Tissue Sampling

STANDARD OPERATING PROCEDURE
NUMBER CTO166-01

SAMPLE LABELING

1.0 PURPOSE

This Standard Operating Procedure (SOP) describes the procedures to be used for labeling and tagging sample containers. Sample labels and tags are used to document the sample ID, date, time, analysis to be performed, preservative, matrix, sampler, and the analytical laboratory. A sample label and a sample tag will be attached to each sample container. The label and tag for each container will contain identical information.

2.0 REQUIRED FIELD FORMS AND EQUIPMENT

Writing utensil
Disposable medical-grade gloves (e.g. latex, nitrile)
Sample logsheets
Required sample containers: All sample containers for analysis by fix-based laboratories will be supplied and deemed certified clean by the laboratory.
Preprinted sample labels and sample tags
Chain-of-custody records
Sealable polyethylene bags
Heavy-duty cooler
Ice

3.0 PROCEDURES

3.1 The following information will be printed on the labels and tags prior to field activities.

- Project number (CTO 166)
- Project location (NSWC Crane)
- Sample ID
- Preservative

- Analysis to be performed
- Matrix type
- Laboratory name

3.2 Preprinted sample labels and tags will be prepared before the team mobilizes to the field. Check to determine if

- One sample label and tag exists for each sample container that is to be collected for all media during the field activities.
- The information printed on each tag and label is correct.
- Extra blank labels and tags are brought to the site in case additional environmental samples or QA samples are collected that are not anticipated in the QAPP. Additional blank labels and tags should also be brought to the site in case a sample container is broken or some of the preprinted labels or tags are accidentally lost before they are attached to a container.

3.3 Once at the field site, sample containers should have labels affixed before sampling activities begin.

3.4 Select the labeled containers that are appropriate for a given sample and fill in the date, time, and sampler's initials just before sampling begins. Use a black waterproof marker or pen.

3.5 Fill the appropriate containers with sample material. Securely close the container lids without overtightening.

3.6 Write the same date, time, and sampler's initials on the sample tag as written on the label.

3.7 Place the sample container in a ziplock plastic bag and place in a cooler containing ice.

3.8 Fill in appropriate information on the Sample Collection Log Form and the Chain-of-Custody Form.

Example sample labels and tags are attached at the end of this SOP.

4.0 ATTACHMENTS

1. Sample Label and Tag

ATTACHMENT 1

SAMPLE LABEL AND TAG

SAMPLE LABEL AND TAG

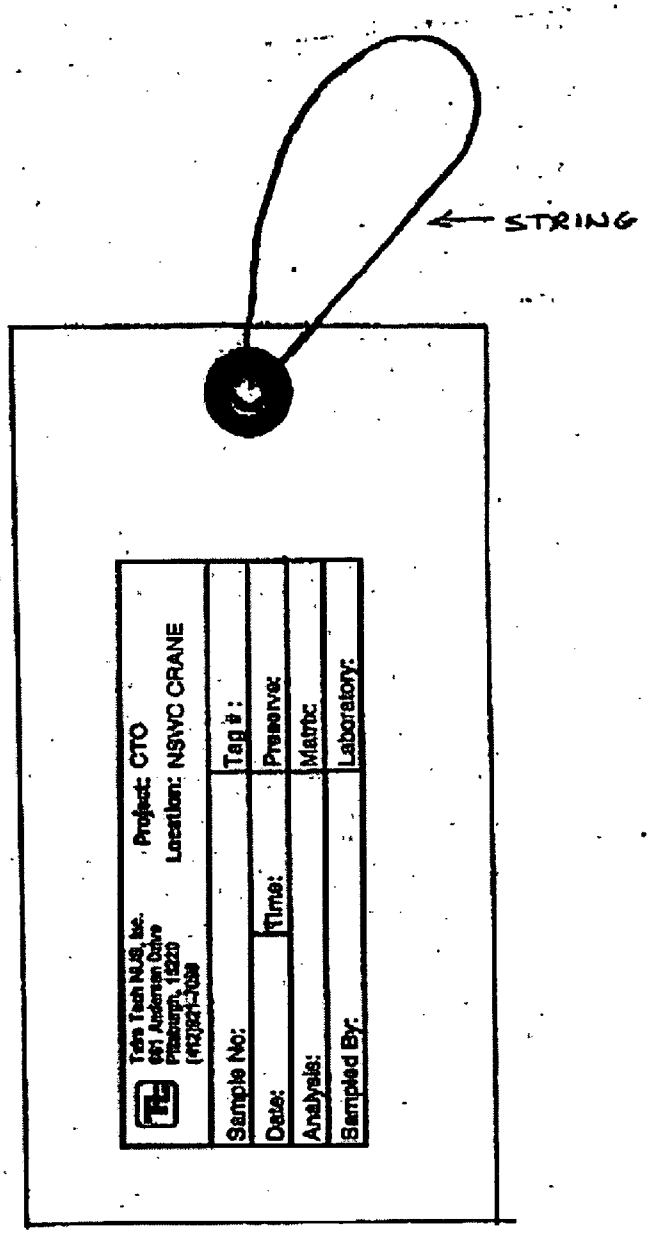

STANDARD OPERATING PROCEDURE
NUMBER CTO166-02

SAMPLE IDENTIFICATION NOMENCLATURE

1.0 PURPOSE

The purpose of this Standard Operating Procedure (SOP) is to establish a consistent sample nomenclature system that will facilitate subsequent data management at the Naval Surface Warfare Center (NSWC). The sample nomenclature system has been devised such that the following objectives can be attained.

- Sorting of data by site, location, or matrix
- Maintenance of consistency (field, laboratory, and database sample numbers)
- Accommodation of all project-specific requirements
- Accommodation of laboratory sample number length constraints
- Ease of identification and direct link to site and year

The NSWC Crane Environmental Protection Department must approve any deviations from this procedure.

2.0 REQUIRED FIELD FORMS AND EQUIPMENT

Pen with indelible ink
Sample tags
Sample container labels

3.0 SAMPLE IDENTIFICATION NOMENCLATURE

3.1 Monitoring Samples

All monitoring samples collected at NSWC Crane will be properly labeled with a sample label affixed to the sample container and a tag tied around the neck of the sample container. Each sample will be assigned a unique sample tracking number. The sample tracking number will consist of a four- or five-segment alpha-numeric code that identifies the sample's associated solid waste management unit (SWMU) or

associated site, sample type, location, and, for aqueous samples, where applicable, whether a sample is filtered, and/or the sample round number. For soil samples, the final four tracking numbers will identify the depth at which the soil sample was collected. For sediment samples, the final characters will be two-digit numbers (instead of four digits) representing the sequential sample number of the sample collected at that location.

3.1.1 Numbering of Samples Other Than Vegetation Samples

The alpha-numeric coding to be used in the NSWC Crane sample system for all samples except vegetation samples is explained in the diagram below and the subsequent definitions:

NN	**AA**	**A or N** **2 to 5-Characters**	**NN and/or A** **Aqueous only**	**NNNN** **Soils and Sediment only**
SWMU or Site Number	Sample Type	Location	Round Identifier and/or Filtered	Depth Interval

Character Type:

A = Alpha
N = Numeric

SWMU or Site Number:

12 = Mine Fill A
13 = Mine Fill B
16 = Cast High Explosives Fill/B146 Incinerator
19 = Pyrotechnic Test Area

Sample Type:

GW - Ground Water Sample from a Permanent Monitoring Well
ID - Investigation-Derived Waste Sample
SB - Soil Boring Sample
SD - Sediment Sample
SP - Seep Sample or Spring Sample
SS - Surface Soil Sample
SW - Surface Water Sample

Location:

The sample location code is the well number, soil sample location, sediment sample location, or the stream sample location (i.e., surface water, springs, or seeps). The location code for each sample is listed on figures and tables in the site-specific work plan. Existing well numbers are used when unique. New wells will be designated by a SWMU or site number, followed by "MW" for permanent monitoring well, "TW" for temporary well, etc.; a "T" for Tetra Tech NUS; and numbered sequentially, by SWMU, beginning with zero one (MWT01).

Well clusters that are newly installed by TtNUS (two or more wells in close proximity) in the same investigative effort will be designated with the letter P followed by the number 2, 3, 4, etc. The number signifies the well depth in relation to other wells in that cluster. This two-digit code will follow the well identification. Using well T02 as an example of a three-well cluster, the well identification will be as follows:

T02	=	The deepest well in the cluster.
T02P2	=	Intermediate well
T02P3	=	Shallowest well in the cluster

Note: To keep the sample identification nomenclature to a minimum number of characters and to avoid redundancy, "MW" (monitoring well) is used for text, figures, and tables and replaced with "GW" (ground water) in the sample identification. For example, MWT01 would be GWT01.

Round Identifier and/or Filtered:

This code section will be used for aqueous samples only.

Round Identifier:

A two-digit round identifier will be used to track the number of aqueous samples (GW, SW) and sediment taken from a particular aqueous sample location or sediment sampling location. The first sample collected from a location will be assigned round identifier 01, the second 02, etc. This applies to both existing and proposed monitoring wells, surface water, and sediment locations.

Filtered:

Water samples that are field filtered (dissolved analysis) will be identified with an "F" in the last code section. No entry in this segment signifies an unfiltered (total) sample.

Depth Interval:

This code section will be used for soil and sediment samples only.

The depth code is used to note the depth below ground surface (bgs) at which a soil sample is collected. The first two numbers of the four-number code specify the top interval, and the third and fourth specify the bottom interval in feet bgs of the sample. The depths will be noted in whole numbers only; further detail, if needed, will be recorded on the sample log sheet, boring log, logbook, etc.

Depth (for soils, in feet bgs)

0002 = soil collected from 0 to 2 feet bgs

0204 = soil collected from 2 to 4 feet bgs

0810 = soil collected from 8 to 10 feet bgs

3.1.2 Numbering of Vegetation Samples

For vegetation samples, the numbering system is similar to the one described in Section 3.1.1, but there are significant differences. The numbering scheme is presented below:

NN	AA	A or N 2 to 5-Characters	NN and/or A Aqueous only	NNNN Soils and Sediment only
SWMU or Site Number	Sample Type	Location	Species Identifier	Sample Group Number

Character Type:

A = Alpha

N = Numeric

SWMU or Site Number:

12 = Mine Fill A

13 = Mine Fill B

16 = Cast High Explosives Fill/B146 Incinerator

19 = Pyrotechnic Test Area

Sample Type:

VG - Vegetation

Species Identifier:

XX - A two-character code to be determined by the TtNUS biologist after samples are submitted to him for identification.

Sample Group Number:

NNNN - A four digit number representing the number of samples of a given species collected at a given location. This is similar to a ground water round number and allows repeat sampling of a given species form a particular location. For sampling Round 3, the number is 0001 because a single sample will be collected from each location for a given plant species.

3.1.3 Examples of Sample Nomenclature

The first ground water sample collected from existing monitoring well 01 at the Cast High Explosives Fill/B146 Incinerator (SWMU 16) for a filtered sample would be designated as 16GW0101F.

The second ground water sample collected from existing monitoring well C20P2 at SWMU 16 for an unfiltered sample would be designated as 16GWC20P202.

The first unfiltered ground water sample collected from new monitoring well MWT01 at SWMU 13 would be designated as 13GWT0101.

The second surface water sample collected from point 01 at SWMU 13 for an unfiltered sample would be designated as 13SW0102.

A surface soil sample collected from soil boring 03 at SWMU 16 at the 0- to 2-foot interval would be designated as 16SS030002.

A subsurface soil sample from the same soil boring 03 at an interval of 4 to 5 feet bgs would be designated as 16SB030405.

The first sediment sample collected at location 19SD14 would be numbered 19SD1401. The second sediment sample collected at location 19SD14 would be numbered 19SD1402, and so on, regardless of how many field events have occurred for SWMU 19. Thus, the round number is linked to the sequential number of samples collected at a given location and not the sequential number of the field event.

During biota sampling for leaves in Sampling Round 3 at SWMU 13, leaves were collected from an oak tree. The sample location was 13VG006. This sample number will be 13VG006OK0001. Another sample of leaves was collected at that same location from a sassafras plant. The sample number for those leaves is 13VG006SF001. The next sample of sassafras leaves to be collected from that location will be number 13VG006SF002. **Note: OK and SF may not be the species designators actually used for these plants. Check with the biologist.**

3.2 Field Quality Assurance/Quality Control (QA/QC) Sample Nomenclature

Field QA/QC samples are described in the approved field sampling plan and QAPP. They will be designated using a different coding system. The QC code will consist of a three- to four-segment alpha-numeric code that identifies the sample QC type, the date the sample was collected, and the number of this type of QC sample collected on that date.

AA	NNNNNN	NN	F
QC Type	Date	Sequence Number (per day)	Filtered (aqueous only, if needed)

The QC types are identified as:

TB = Trip Blank
RB = Rinsate Blank (Equipment Blank)
FD = Field Duplicate
AB = Ambient Conditions Blank
SB = Source Water Blank

The sampling time recorded on the Chain-of-Custody Form, labels, and tags for duplicate samples will be 0000 so that the samples are "blind" to the laboratory. Notes detailing the sample number, time, date, and type will be recorded on the sample log sheets and will document the location of the duplicate sample (sample log sheets are not provided to the laboratory).

3.2.2 Examples of Field QA/QC Sample Nomenclature

The first duplicate of the day for a filtered ground water sample collected on June 3, 2000 would be designated as FD06030001F.

The third duplicate of the day taken of a subsurface soil sample collected on November 17, 2003 would be designated as FD11170303.

The first trip blank associated with samples collected on October 12, 2000 would be designated as TB10120001.

The only rinsate blank collected on November 17, 2001 would be designated as RB11170101.

STANDARD OPERATING PROCEDURE
NUMBER CTO166-03

SAMPLE CUSTODY AND DOCUMENTATION OF FIELD ACTIVITIES

1.0 PURPOSE

This Standard Operating Procedure (SOP) establishes the procedures for sample custody and documentation of field sampling and field analyses activities.

2.0 REQUIRED FIELD FORMS AND EQUIPMENT

The following logbooks, forms, and labels are required.

Site logbook
Field logbook
Sample label
Chain-of-Custody Form
Custody seals
Equipment calibration log
Monitoring Well Inspection Form
Water-Level Measurement Form
Low-Flow Purge Data Sheet
Ground Water Sample Log Sheet
Surface Water Sample Log Sheet
Soil and Sediment Log Sheet

3.0 PROCEDURES

This section describes custody and documentation procedures. All entries made into the logbooks, custody documents, logs, and log sheets described in this SOP must be made in indelible ink (black is preferred). No erasures are permitted. If an incorrect entry is made, the entry will be crossed out with a single strike mark, initialed, and dated.

3.1 Site Logbook

The site logbook is a hard-bound, paginated, controlled-distribution record book in which all major on-site activities are documented. At a minimum, the following activities and events will be recorded (daily) in the site logbook:

- All field personnel present
- Arrival/departure of site visitors
- Arrival/departure of equipment
- Start or completion of sampling activities
- Daily on-site activities performed each day
- Sample pickup information
- Health and safety issues
- Weather conditions

The site logbook is initiated at the start of the first on-site activity (e.g., site visit or initial reconnaissance survey). Entries are to be made for every day that on-site activities take place.

The following information must be recorded on the cover of each site logbook:

- Project name
- Project number
- Book number
- Start date
- End date

Information recorded daily in the site logbook need not be duplicated in other field notebooks but must summarize the contents of these other notebooks and refer to specific page locations in these notebooks for detailed information (where applicable). At the completion of each day's entries, the site logbook must be signed and dated by the field operations leader (FOL).

3.2 Field Logbooks

The field logbook is a separate dedicated notebook used by field personnel to document his or her activities in the field. This notebook is hardbound and paginated.

3.3 Sample Labels

Adhesive sample container labels must be completed and applied to every sample container. Information on the label includes the project name, location, sample number, date, time, preservative, analysis, matrix, sampler's initials, and the name of the laboratory performing the analysis.

3.4 Chain-of-Custody Form

The Chain-of-Custody Form (COC) is a multi-part form that is initiated as samples are acquired and accompanies a sample (or group of samples) as it is transferred from person to person. Each COC is numbered. This form must accompany any samples collected for laboratory chemical analysis. A copy of a blank COC form is attached at the end of this SOP.

The FOL must include the name of the laboratory in the "Remarks" section to ensure that the samples are forwarded to the correct location. If more than one COC is necessary for any cooler, the FOL will indicate "Page __ of __" on each COC. The original (top) signed copy of the COC will be placed inside a large Ziploc-type bag and taped inside the lid of the shipping cooler. Once the samples are received at the laboratory, the sample custodian checks the contents of the cooler(s) against the enclosed COC(s). Any problems are noted on the enclosed COC Form (bottle breakage, discrepancies between the sample labels, COC form, etc.) and will be resolved through communication between the laboratory point-of-contact and the Task Order Manager (TOM). The COC Form is signed and retained by the laboratory and becomes part of the sample's corresponding analytical data package.

3.5 Custody Seal

The custody seal is an adhesive-backed label with a number on each seal. It is part of the chain-of-custody process and is used to prevent tampering with samples after they have been collected in the field and sealed in coolers for transit to the laboratory. The custody seals are signed and dated by the samplers and affixed across the opening edges of each cooler (two seals per cooler) containing environmental samples. The laboratory sample custodian will examine the custody seal for evidence of tampering and will notify the TOM if evidence of tampering is observed.

3.6 Equipment Calibration Log

The Equipment Calibration Log is used to document calibration of measuring equipment (e.g., multi-parameter water-quality meter) used in the field. The Equipment Calibration Log documents that the manufacturer's instructions were followed for calibration of the equipment, including frequency and type of standard or calibration device. An Equipment Calibration Log must be maintained for each electronic measuring device requiring calibration. Entries must be made for each day the equipment is used.

3.7 Monitoring Well Inspection Form

The Monitoring Well Inspection Form is used to document the inspection of existing monitoring wells in accordance with SOP CTO166-09.

3.8 Water-Level Measurement Form

The Water-Level Measurement Form is used to document the determination of water levels in monitoring wells in accordance with SOP CTO166-17.

3.9 Low-Flow Purge Data Sheet

The Low-Flow Purge Data Sheet is used to document field measurements made while purging wells to stabilization in accordance with SOP CTO166-15.

3.10 Ground Water Sample Log Sheet

The Ground Water Sample Log Sheet is used to document the samples taken from a monitoring well at the end of low-flow well purging. This sheet is used in conjunction with SOP CTO166-05.

3.11 Surface Water Sample Log Sheet

The Surface Water Sample Log Sheet is used to document the samples collected from surface waters. This sheet is used in conjunction with SOP CTO166-18.

3.12 Soil and Sediment Sample Log Sheet

The Soil and Sediment Sample Log Sheets are used to document the sampling of soils and sediments. This sheet is used in conjunction with SOP CTO166-08 and SOP CTO166-19.

4.0 ATTACHMENTS

1. Chain-of-Custody Record

ATTACHMENT 1
CHAIN-OF-CUSTODY RECORD

TETRA TECH NUS, INC. CHAIN OF CUSTODY | NUMBER | PAGE ____ OF _____

PROJECT NO:	SITE NAME:	PROJECT MANAGER AND PHONE NUMBER	LABORATORY NAME AND CONTACT:
SAMPLERS (SIGNATURE)		FIELD OPERATIONS LEADER AND PHONE NUMBER	ADDRESS
		CARRIER/WAYBILL NUMBER	CITY, STATE

STANDARD TAT ☐
RUSH TAT ☐
☐ 24 hr. ☐ 48 hr. ☐ 72 hr. ☐ 7 day ☐ 14 day

DATE YEAR	TIME	SAMPLE ID	MATRIX	GRAB (G) COMP (C)	No. OF CONTAINERS	CONTAINER TYPE PLASTIC (P) or GLASS (G)	PRESERVATIVE USED	TYPE OF ANALYSIS							COMMENTS

1. RELINQUISHED BY	DATE	TIME	1. RECEIVED BY	DATE	TIME
2. RELINQUISHED BY	DATE	TIME	2. RECEIVED BY	DATE	TIME
3. RELINQUISHED BY	DATE	TIME	3. RECEIVED BY	DATE	TIME
COMMENTS					

DISTRIBUTION: WHITE (ACCOMPANIES SAMPLE) YELLOW (FIELD COPY) PINK (FILE COPY)

3/99
FORM NO. TINUS-001

STANDARD OPERATING PROCEDURE
NUMBER CTO166-04

BOREHOLE ADVANCEMENT AND SOIL CORING USING DIRECT-PUSH TECHNOLOGY AND HAND AUGER TECHNIQUES

1.0 PURPOSE

This Standard Operating Procedure (SOP) describes the procedures for collecting surface and subsurface soil cores from unconsolidated overburden materials using direct-push technology (DPT) and hand augering techniques at the NSWC Crane facility. For this investigation, a Geoprobe® rig with a Macrocore Sampler will be the type of DPT used.

2.0 REQUIRED FIELD FORMS AND EQUIPMENT

Cut-resistant non-latex Impermeable Gloves
Cotton gloves
Disposable medical-grade gloves (e.g., latex, nitrile)
Writing utensil
Boring log sheets: A copy of this form is included in SOP CTO166-07
Photoionization detector (PID) (see SOP CTO 166-06)
Geoprobe® or equivalent DPT equipment
Geoprobe® Macrocore Sampler or equivalent
Geoprobe® Sampling Kit or equivalent
Clear acetate liners: one new liner for each soil core
Stainless Steel Auger Buckets
Stainless Steel Extension Rods
Cross Handle
Required decontamination materials (see SOP CTO166-16)
Bentonite pellets

3.0 BOREHOLE ADVANCEMENT AND SOIL SAMPLING USING A GEOPROBE®

DPT will be employed to collect soil cores. DPT refers to sampling tools and sensors that are driven directly into the ground without the use of conventional rotary drilling equipment. DPT typically utilizes hydraulic pressure and/or percussion hammers to advance the sampling tools. Geoprobe® is a manufacturer of a hydraulically powered, percussion/probing machine utilizing DPT to collect subsurface environmental samples.

3.1 Clear the area to be sampled of any surface debris (herbaceous vegetation, twigs, rocks, litter, etc.).

3.2 Place a new clear acetate liner in the detachable Macrocore core barrel and attach the coring device to the Geoprobe® rig.

3.3 Drive the macrocore sampler (lined with acetate) into the ground to a depth of 2 feet using hydraulic pressure. The 0- to 2-foot depth soil interval is considered to be the surface soil.

3.4 Retract the sampler from the borehole and remove the acetate liner and the soil core from the Macrocore barrel.

3.5 Attach the metal trough from the Geoprobe® Sampling Kit firmly to the tailgate of a vehicle. If a vehicle with a tailgate is not available, secure the trough on another suitable surface.

3.6 Place the acetate liner containing the soil core in the trough.

3.7 While wearing cut-resistant gloves (constructed of non-latex over cotton), cut the acetate liner through its entire length using the double-bladed knife that accompanies the Geoprobe® Sampling Kit. Then remove the strip of acetate from the trough to gain access to the collected soils. **CAUTION:** Do not attempt to cut the acetate liner while holding it in your hand.

3.8 Scan the entire length of the soil core for VOCs using the PID. Record the specific depth interval and the associated PID reading on the Boring Log Sheet. Collect a soil VOC sample using Encore samplers from the soil interval that had the highest PID reading. If no above-background PID readings were detected, collect the VOC sample from an interval that is discolored or displays other visual signs of being contaminated. If no visual sign of contamination is evident, collect the

soil VOC sample from the center of the core interval (i.e., 1-foot depth). Details for collecting a VOC sample using the Encore sampler are included in SOP CTO166-08.

3.9 Log the soil core on the Boring Log Sheet (see SOP CTO166-07).

3.10 Place the soil core in a stainless-steel mixing bowl, homogenize, and collect the remainder of the soil sample aliquots, as described in SOP CTO 166-08.

3.11 Repeat steps 3.2 through 3.11 for the next depth intervals.

3.12 The depth to bedrock should be recorded on the Boring Log and the estimated moisture content of the soil and the presence or absence of water in the boring should be noted.

3.13 If readings from the PID are all at background levels below field screening criteria, then excess soil core materials will be returned to the hole and tamped. If insufficient soil is available to fill the hole to the ground surface, then bentonite pellets mixed with the soil will be used to backfill the hole.

3.14 If screening instruments indicate that contaminants may be present in the soil materials, then all excess soil core materials will be placed in a plastic bag (or drum if larger quantities). The bag will be tagged identifying the locations and depths from where the soils came from and the date. The bag will then be placed in a 55-gallon drum and stored on site until laboratory analyses of the soil are completed and classification of the soil waste materials can be determined (see SOP CTO166-14).

3.15 If soil materials from the boring are suspected of being contaminated (see 3.14 above), the soil boring will be backfilled with bentonite pellets up to the ground surface.

3.16 Decontaminate all soil sampling equipment in accordance with SOP CTO166-16 before collecting the next sample.

4.0 BOREHOLE ADVANCEMENT AND SOIL SAMPLING USING A HAND AUGER

Hand Augers may be employed to collect soil cores where non-VOC samples will be collected. A hand augering system generally consists of a variety of all stainless steel bucket bits (i.e. cylinders 6-1/2" long and 2-3/4", 3-1/4", and 4" in diameter), a series of extension rods (available in 2', 3', 4' and 5' lengths), a

cross handle. A larger diameter bucket bit is commonly used to bore a hole to the desired sampling depth and then withdrawn. In turn, the larger diameter bit is replaced with a smaller diameter bit, lowered down the hole, and slowly turned into the soil at the completion depth or refusal. The apparatus is then withdrawn and the soil sample collected.

The hand auger can be used in a wide variety of soil conditions. It can be used to sample soil, both from the surface, or to depths in excess of 12 feet. However, the presence or rock layers and the collapse of the borehole normally contribute to its limiting factors.

4.1 Attach a properly decontaminated bucket bit into a clean extension rod and further attach the cross handle to the extension rod.

4.2 Clear the area to be sampled of any surface debris (vegetation, twigs, rocks, letter, etc.)

4.3 Begin augering (periodically removing accumulated soils from the bucket bit) and add additional rod extensions as necessary. Also, note (in a field notebook or on standardized data sheets) and changes in the color, texture or odor of the soil.

4.4 After reaching the desired depth, slowly and carefully withdraw the apparatus from the borehole.

4.5 Remove the soiled bucket bit from the extension rod extension and replace it with another properly decontaminated bucket bit. The bucket bit used for sampling is commonly smaller in diameter than the bucket employed to initiate the borehole.

4.6 Carefully lower the apparatus down the borehole. Care must be taken to avoid scraping the borehole sides.

4.7 Slowly turn the apparatus until the bucket bit is advanced approximately 6 inches.

4.8 Discard the top of the core (approximately 1"), which represents any loose material collected by the bucket bit before penetrating the sample material.

4.9 Scan the soil core using the PID. Record the specific depth interval and the associated PID reading on the Boring Log Sheet.

4.10 Utilizing a properly decontaminated stainless steel trowel or disposable trowel, remove the sample material from the bucket bit and place into a properly decontaminated stainless steel mixing bowl and thoroughly homogenize the sample material prior to filling the remaining sample containers, as described in SOP CTO 166-8.

4.11 Log the soil core on the Boring Log Sheet (see SOP CTO166-07).

4.12 If readings from the PID are all at background levels below field screening criteria, then excess soil core materials will be returned to the hole and tamped. If insufficient soil is available to fill the hole to the ground surface, then bentonite pellets mixed with the soil will be used to backfill the hole.

4.13 If screening instruments indicate that contaminants may be present in the soil materials, then all excess soil core materials will be placed in a plastic bag (or drum if larger quantities). The bag will be tagged identifying the locations and depths from where the soils came from and the date. The bag will then be placed in a 55-gallon drum and stored on site until laboratory analyses of the soil are completed and classification of the soil waste materials can be determined (see SOP CTO166-15).

4.14 If soil materials from the boring are suspected of being contaminated (see 4.12 above), the soil boring will be backfilled with bentonite pellets up to the ground surface.

4.15 Decontaminate all soil sampling equipment in accordance with SOP CTO166-16 before collecting the next sample.

STANDARD OPERATING PROCEDURE
NUMBER CTO166-05

MONITORING WELL SAMPLING

1.0 PURPOSE

This Standard Operating Procedure (SOP) establishes the procedure for monitoring well sampling. Low-flow sampling techniques will be used for ground water sampling at the NSWC Crane facility.

2.0 REQUIRED FIELD FORMS AND EQUIPMENT

The following field forms and equipment are required for low-flow sampling of monitoring wells:

Ground Water Sample Log Form: A copy of this form is attached at the end of this SOP

Bound field log book

Chain-of-Custody Form

Bladder pump

Peristaltic Pump

Surgical gloves

Labeled sample containers: Sample containers are certified clean by the laboratory supplying the sample containers.

Tag for each sample container

Plastic storage bags

Shipping containers with ice

3.0 MONITORING WELL SAMPLING PROCEDURES

3.1 Ground water sampling may be initiated when the monitoring well has been purged and stabilized in accordance with SOP CTO166-15.

3.2 Record the sample start time (using military time) on the Ground Water Sample Log Sheet. Record the field measurements for pH, (ORP), specific conductance, temperature, dissolved oxygen, and turbidity.

3.3 With the pump continuing to run, disconnect the flow-through cell from the pump discharge tube and immediately start filling sample bottles directly from the pump discharge. All sample containers will be supplied by the laboratory, and the laboratory will pre-preserve all sample containers, where appropriate.

3.4 Allow the pump discharge to flow gently down the inside of the container with minimal turbulence when filling sample containers. Avoid immersing the discharge tube into the sample as the sample container is being filled. Sample containers for volatile constituents (VOCs) must be completely filled so that no headspace exists in the container. The VOC vials will be filled to the top so that a convex meniscus is formed. Gently secure the cap, turn the vial upside down, and check to see if any air has been trapped inside the vial. If so, open the cap, reform the meniscus, and attempt again to secure the lid without trapping air in the sample. All other sample containers can have air space included when the container lid is secured.

3.5 Cap each container immediately after filling.

3.6 Record the sample time on the Ground Water Sample Log Form, the sample tag, and the sample label.

3.7 Secure the associated tag to each sample container.

3.8 Place the tagged sample container into a plastic storage bag and then into a cooler containing ice.

3.9 Enter the proper information on the Chain-of-Custody Form for each sample container (see SOP CTO166-03).

3.10 Repeat steps 3.3 through 3.9 for each sample container collected.

3.11 The pump rate should not be adjusted after sampling has commenced. If it becomes necessary to adjust the pump rate, document the change on the Ground Water Sample Log Form.

3.12 All samples will be collected into pre-preserved bottles (if required) supplied by an approved laboratory. All samples will be collected in the following sequence (where applicable):

- Volatile organic compounds (VOCs)
- Other organics
- Appendix IX Metals plus Sn (totals)
- Nitrate
- Nitrite

3.13 If the last turbidity measurement prior to the commencement of sampling showed turbidity to be greater than 10 nephelometric turbidity units (NTUs), then filtered aliquots of ground water will be collected and analyzed for dissolved metals. Without turning off the pump, attach a disposable, inline, 0.45-um filter cartridge at the end of the discharge tube. Fill sample containers marked for dissolved metals so that the laboratory knows that these aliquots are distinct sample fractions and that the results should be reported as dissolved analytes.

3.14 Repeat steps 3.5 through 3.9 for the filtered sample containers.

3.15 After completion of sample collection, remove the bladder pump from the well and decontaminate following the procedures in SOP CTO166-16.

3.16 Replace the outer protective well cap and lock the well.

3.17 All equipment should be cleaned and packed into the sample vehicle, along with the sample cooler for transport. Disposable gloves and other equipment should be placed in a plastic trash bag and handled as investigation-derived waste (SOP CTO166-14).

4.0 ATTACHMENTS

1. Ground Water Sample Log Sheet

ATTACHMENT 1

GROUND WATER SAMPLE LOG SHEET

Tetra Tech NUS, Inc.

GROUNDWATER SAMPLE LOG SHEET

Page___ of ___

Project Site Name: _____
Project No.: _____

[] Domestic Well Data
[] Monitoring Well Data
[] Other Well Type: _____
[] QA Sample Type: _____

Sample ID No.: _____
Sample Location: _____
Sampled By: _____
C.O.C. No.: _____
Type of Sample:
[] Low Concentration
[] High Concentration

SAMPLING DATA:

Date: Time: Method:	Color (Visual)	pH (S.U.)	S.C. (mS/cm)	Temp. (°C)	Turbidity (NTU)	DO (mg/l)	Salinity (%)	Other

PURGE DATA:

Date:	Volume	pH	S.C.	Temp.	Turbidity	DO	Salinity	Other
Method:								
Monitor Reading (ppm):								
Well Casing Diameter & Material								
Type:								
Total Well Depth (TD):								
Static Water Level (WL):								
One Casing Volume(gal/L):								
Start Purge (hrs):								
End Purge (hrs):								
Total Purge Time (min):								
Total Vol. Purged (gal/L):								

SAMPLE COLLECTION INFORMATION:

Analysis	Preservative	Container Requirements	Collected

OBSERVATIONS / NOTES:

Circle if Applicable:

MS/MSD	Duplicate ID No.:	Signature(s):

STANDARD OPERATING PROCEDURE
NUMBER CTO166-06

CALIBRATION AND USE OF PHOTOIONIZATION DETECTOR

1.0 PURPOSE

This Standard Operating Procedure (SOP) establishes procedures for the maintenance, calibration, and use of a photoionization detector (PID). The Photovac 2020 Photoionization Air Monitor will be used during the NSWC Crane facility investigation. The procedures for its use are discussed in detail in the following sections.

2.0 GLOSSARY

Electron-volt (eV) - A unit of energy equal to the energy acquired by an electron when it passes through a potential difference of 1 volt in a vacuum.

Intrinsically Safe (I.S.) - Based on wiring, configuration, design, operation, gasketing, construction, this instrument may be employed within locations where flammable gases and/or vapors may exist.

Ionization Potential (I.P.) - The energy required to remove an electron from a molecule yielding a positively charged ion and a negatively charged free electron. The instrument measures this energy level.

Photoionization Detector (PID) - Photoionization detector is employed as the general reference to air monitors of this type. PID's detection method employs ultraviolet (UV) radiation as an energy source. As air and contaminants are drawn through the ionization chamber, the UV light source causes the contaminant with ionization potentials equal to or less than the UV source to break into positive and negatively charge ions. The created ions are subjected to an electrostatic field. The voltage difference is measured in proportion to the calibration reference and the concentration of the contaminant.

Ultraviolet Radiation (UV) Lamp - Ultraviolet radiation is the energy source employed by the instrument to ionize collected sample gas streams. The UV lamp source is required to be equal to or greater than the ionization potential of the substance drawn through the instrument in order to create separate ionized species.

3.0 REQUIRED EQUIPMENT

Pen
Equipment Calibration Form
Photoionization detector
Isobutylene calibration gas (i.e., span gas)
Regulator

4.0 PROCEDURES

4.1 Principle of Operation

The Photovac portable photoionizer detects many organic (and a few inorganic) species. The basis for detection of this instrument is the ionization of components in gaseous streams. The incoming gas molecules are subjected to ultraviolet (UV) radiation, which is energetic enough to ionize many compounds associated with industrial activities. Molecules are transformed into charged-ion pairs, creating a current between two electrodes. Each molecule has a characteristic ionization potential, which is the energy required to remove an electron from the molecule, yielding a positively charged ion and a free electron. The instrument measures this energy level.

This instrument measures the concentration of airborne photoionizable gases and vapors and automatically displays and records these concentrations. It does not distinguish between individual substances. Readings displayed represent the total concentration of all photoionizable chemicals present in the sample. This instrument is factory-set to display concentration in units of ppm or mg/m^3. The meter display updates itself once per second.

The 2020 also performs short-term exposure limit (STEL), time-weighted average (TWA), and PEAK calculations. Any of these results can be viewed, but only one mode may be viewed at a time.

The 2020 has six keys for alphanumeric entry and for accessing multiple functions. The keys are used to set up and calibrate 2020. They allow the user to manipulate the concentration data in various ways.

All information entered with the keys and stored in the 2020's memory is retained when the instrument is switched off. The clock and calendar continue to operate and do not need to be set each time the 2020 is turned on.

4.1.1 Displays

The 2020 has a meter display for reporting detected concentration and a display used for status/ information to guide you through configuration options. All functions of the 2020 will be controlled or reported using one of these displays.

4.1.1.1 Meter Display

The meter display is four digits. It will always be used for reporting detected concentration. When the detector and pump are off, the meter display will be blank.

In order to accommodate the range of concentrations the 2020 can detect, the meter reading will be reported using one of two resolutions. A resolution of 0.1 will be used for concentrations below 100 ppm, and a resolution of 1 will be used for concentrations above 100 ppm.

4.1.1.2 Status Display

The status display is a two- line by 16-character display. The top line is used to display status information and prompts the user for inputs. The bottom line is used for soft key names. Up to three names can be displayed for the three soft keys. If a name does not appear for a soft key, then the soft key has no associated function.

4.1.2 Keys

4.1.2.1 Fixed Keys

The three round keys below the soft keys each have a fixed function. The first key is the ON/OFF key, the middle key is the EXIT key, and the last key is the ENTER key.

The ON/OFF key is used to both turn power on and off. To turn on the 2020, press the ON/OFF key. To turn the power off, press the ON/OFF key and hold it down for 2 seconds, and then release it. This is done to prevent accidental power off.

The EXIT key provides a way of returning to the default display. In the functional map, the soft keys allow the user to advance and the EXIT key provides a way to go back. If the user is at the initial entry of the menu, EXIT will return you to the default display.

The ENTER key has a context sensitive function. When the user is operating or navigating through the function map, the ENTER key is used to exit the functions and return to the default display. When entering data such as a name, number, date, or time, ENTER is used to confirm the entry.

4.1.2.2 Soft Keys

The three soft keys on the 2020 are located directly below the status display. Each key has varying functions for configuring the 2020, editing the data logger, and controlling the display. Because only three soft keys are available, each function is broken down into a path.

4.1.2.3 Entering Text with the Soft Keys

For all information that is entered, the left, center, and right soft keys correspond to the up, down, and right arrow.

The up and down arrows are used to change the character highlighted by the cursor. The right arrow is used to advance the cursor to the next character on the right. When the cursor is advanced past the right most character, it wraps around to the first character again. To accept the changes, press the ENTER key. To ignore the change, press EXIT.

Formatting characters, such as the colon (:) in the time, the decimal (.) in a concentration, and the slash (/) in the date, are skipped when advancing the cursor.

All inputs are an eight-character input, which is displayed on the right side of the top line of the status display. The prompt, describing the input, occupies the left half of the top line. The soft keys are defined on the bottom line of the status display.

4.2 Default Display

The meter display shows the detected concentration. The resolution of the display changes with the magnitude of the reading. A reading of 0 to 99.9 will be displayed with a resolution of 0.1 ppm. A reading greater than 99.9 will be shown with a resolution of 1 ppm or 1 mg/m^3. The meter will display concentrations up to 2000 ppm or 2(99) mg/m^3.

The status display is used to display the instrument status, date, time, units, and active soft keys.

The default display provides the following information: instrument status, current detected concentration, time, date, and measurement units. The status display toggles between showing time and units and then the date.

When the display mode is MAX, the date and time correspond to the date and time the MAX concentration was recorded. In TWA mode, the time represents the number of hours and minutes during which the TWA has been accumulating. For PEAK and STEL monitoring, the date and time correspond to the current date and time.

4.3 Monitoring

4.3.1 Instrument Status

The instrument status is shown on the left of the first line of the status display and on the Table and Graph outputs. Each status has a priority assigned to it. If more than one status is in effect, then the status with the highest priority is displayed until the condition is corrected or until the option is turned off.

4.3.2 Alarms

While operating the instrument, any one of three alarm conditions can occur. To accurately identify the source of the alarm, each type of alarm has been given a unique status.

In addition to the status, the 2020 also has an audible alarm and a visual alarm LED. To conserve power, the 2020 alternates between these two alarm indicators, rather than operating both concurrently. Different alarms are identified by the frequency at which the 2020 alternates as follows: PEAK alarm, 5 times per second; STEL alarm, 2.5 times per second; and TWA alarm, 1.25 times per second.

The left soft key is used for acknowledging alarms, and is labeled "Ack." If no alarm exists, then the "Ack" key is not shown. To clear the alarm, press the "Ack" key. Once acknowledged, the alarm indicators are cleared. The alarm status will remain until the alarm condition clears.

The 2020 updates the peak concentration once every second. Following every update, the peak concentration is compared to the peak alarm level, and, if exceeded, an alarm is triggered.

If a 15-minute average concentration exceeds the selected STEL, a STEL alarm is generated.

The TWA alarm is generated when the current average concentration over an 8-hour period, since the TWA was last cleared, has exceeded the TWA exposure limit.

During calibration, all alarms are disabled. Once the calibration is complete, the alarms are re-enabled.

4.4 STEL, TWA, MAX, and PEAK Operation

The 2020's meter display can be configured to show one of four values: STEL, TWA, PEAK, and MAX.

4.4.1 Short-term Exposure Limit Mode

The STEL mode displays the concentration as a 15-minute moving average. The 2020 maintains 15 samples, each representing a 1-minute averaging interval.

Once every minute, the oldest of the 15 samples is replaced with a new 1-minute average. This moving average provides a 15-minute average of the last 15 minutes with a 1-minute update rate. Because the average is calculated using 15 one-minute averages, the meter display will only update once every minute.

The STEL is set to zero each time the instrument is turned on. Because STEL is a 15-minute moving average, there is no need to clear or reset the STEL.

STEL calculations are always being performed by the 2020. The user can display the results of the calculations by selecting "STEL" as the Display mode.

4.4.2 Time-weighted Average (TWA) Mode

The TWA accumulator sums concentrations every second until 8 hours of data have been combined. If this value exceeds the TWA alarm setting, a TWA alarm is generated. The TWA is not calculated using a moving average. Once 8 hours of data have been summed, the accumulation stops. In order to reset the TWA accumulator, press the "Clr" key.

This sum will only be complete after 8 hours, so the meter displays the current sum divided by 8 hours. While in TWA mode, the time on the status display will show the number of minutes and hours of data that TWA has accumulated. When this reaches 8 hours, the 2020 stops accumulating data and the TWA is complete.

TWA calculations are always being performed by the 2020. The user can display the results of the calculations by selecting TWA as the Display mode.

4.4.3 MAX Mode

The MAX mode displays the maximum signal, with the date and time that it was recorded. The 2020 continues to log data according to the selected averaging interval, but only the maximum detected concentration is displayed on the meter display.

The right soft key is used to clear the meter when displaying MAX. The "Clr" key only affects the reading that the meter is displaying. For example, if the MAX reading is displayed, and "Clr" is pressed, only the MAX value is cleared. The TWA is still accumulating in the background.

4.4.4 PEAK Mode

The PEAK mode displays the current detected concentration. The reading is updated once a second. In the background, the 2020 data logger is sampling the concentration and measuring minimum, maximum, and average concentrations for the selected averaging interval. At the end of every interval, one entry is placed in the data logger until the data logger is full. For CTO 166, the instrument should be operated in this mode. Operation within the other specialized modes is the responsibility of the SSO.

4.5 Set Functions

Set functions are used to set up the 2020. Three functions can be set on the 2020: Pump, Clock, and Calibration.

4.5.1 Pump

The Pump function is used to control the pump. After selecting "Set Pump," the 2020 responds by displaying the new pump status.

The detector is also turned off when the pump is turned off. This prevents the detector from being damaged when there is no sample flowing through the detector.

When the pump and the detector are off, the meter display will be blank. Turn the pump and detector off when concentration measurements are not necessary, and the 2020 will only be used for reviewing data

or generating reports. By operating the instrument with the pump and detector off when they are not needed, the lives of the battery and ultraviolet (UV) lamp will be conserved.

To set the pump:

1. Press the ENTER key. The top line of the status display changes to "Select?" The bottom line displays three soft key names: "Set," "Log," and "Disp."

2. Press the soft key below "Set."

3. The names of the soft keys change to reflect the Set options. The display now shows three devices that can be set: "Clock," "Pump," and "Cal." Press the "Pump" key.

4. The 2020 turns the pump off. If the pump was off, pressing "Pump" will turn the pump on.

5. A message will be displayed to show the status of the pump. The 2020 reverts back to the previous menu after a few seconds.

6. To return to the default display, press the ENTER key.

4.5.2 Clock

The Clock function is used to set both the current date and time.

To set the clock:

1. Press the ENTER key.

2. Press the "Set" key.

3. When the names of the soft keys change, press the "Clock" key.

   The up and down arrows are used to change the character underlined by the cursor. The right arrow is used to advance the cursor to the next character on the right. When the cursor is advanced past the right-most character, it wraps around to the first character again.

Formatting characters, such as the colon (:) in the time and the slash (/) in the date are skipped when advancing the cursor.

4. Use the "arrow keys" to enter the correct time. The time is formatted as Hour:Minute:Second.

5. Press the ENTER key to confirm the time and move to the date option.

6. When setting the date, the 2020 prompts for the current date formatted as Year/Month/Day. Use the "arrow keys" to enter the correct date.

7. Press the ENTER key to confirm the date and return to the Set options. Wait for the display to timeout or press ENTER to return to the default display.

4.5.3 Calibration (Cal)

"Cal" allows the user to set up and calibrate the 2020. There are three options under the Cal function: "Zero," "Span," and "Mem."

A calibration memory consists of a name, a response factor, and PEAK, TWA, and STEL alarm levels.

The "Zero" and "Span" keys are covered in detail in the manufacturer's operations manual for the instrument.

To edit the calibration memory, select "Mem" and then "Chng." The 2020 prompts the user with two new soft keys: "User" and "Lib."

4.5.4 Library (Lib)

Library selections simplify Cal Memory programming and provide standard response factors for approximately 70 applications. "Lib" allows the user to select an entry from a pre-programmed library. The name, response factor, and three alarm levels are all set from the library. To select a library entry to program the selected Cal Memory:

1. Select "Set," "Cal," "Mem," "Chng," and "Lib."
2. Use the "Next" and "Prev" keys to scroll through the list. See the manufacturer's manual Appendix 8.7 for a list of the library entries.

4.6 Preparing for Field Operation of the Photovac 2020

Turning The 2020 On

1. Turn the 2020 on by pressing the ON/OFF key.

2. The 2020 will display the software version number. Wait for the 2020 to proceed to the default display.

3. Allow 10 minutes for the instrument to warm up and stabilize.

4. Press the Enter Key. The default display will provide three soft key selections, "Set," "Log," and "Display."

5. Press "Set." From this option, three other soft key selections will be offered: "Pump," "Clock," and "Cal."

6. Press "Cal." This will begin the calibration sequence. The first selection is to zero the instrument.

7. Press Enter; zeroing will begin. (Note: When employing zero gas, attach and activate zero gas supply at this time.)

8. The next selection offered will be Span. Press Enter, at which time the concentration will be requested. The isobutylene calibration gas employed under general service will be marked on the side of the container. Use the soft keys to toggle into position and to log the concentration. Once the concentration is logged, press "Enter." The direction on the status display will indicate spanning. At this time, hook up the span gas with a regulator to the Photovac 2020 and open it to supply enough flow to elevate the flow rate indicator to the green indicator line (1/8 inch from the rest position).

9. Once spanning is complete, the alarms, which have been disabled during calibration, will activate, indicating that calibration is complete.

10. Document this calibration procedure using a Document of Calibration form (included in Appendix A).

This instrument is ready for general purpose application.

Calibration is to be performed daily or prior to each use, in accordance with this section.

4.7 Maintenance and Calibration Schedule

Function	Frequency
Routine Calibration	Prior to each use.
Factory Inspection and Calibration	Once a year, or when malfunctioning.
Wipe Down the Outer Casing of the Unit	After each use.
Clean UV Light Source	Every 24 hours of operation.
Sample Inlet Filter	Change on a weekly basis or as required by level of use.
Battery charging	After each use.
Clean ionization chamber	Monthly.

4.7.1 Cleaning the UV Light Source Window

1. Turn the FUNCTION switch to the OFF position. Use the 2020 multi-tool and remove the lamp housing cover. CAUTION: The UV lamp is delicate and expensive; handle carefully.

2. Tilt the lamp housing with one hand over the opening; slide the lamp out of the housing.

3. The lamp window may now be cleaned with any of the following compounds using lens paper:
   a. 11.7 eV Lamp - Dry Aluminum Oxide Powder (3.0 micron powder)
   b. All other lamps-HPLC Grade Methanol

4. Following cleaning, reassemble by first sliding the lamp back into the lamp housing. Replace the o-ring as necessary, reinstall the lamp housing cover, and tighten it using the 2020 multi-tool. (Do not over tighten.)

5. Recalibrate the instrument as per Section 4.6.

4.7.2 Cleaning the Ionization Chamber

1. Turn the FUNCTION switch to the OFF position and remove the lamp housing cover and lamp as per Section 4.7.1.

2. Using a gentle jet of compressed air, gently blow out any dust or dirt.

3. Following cleaning, reassemble by first sliding the lamp back into the lamp housing. Replace the o-ring as necessary, reinstall the lamp housing cover, and tighten it using the 2020 multi-tool. (Do not over tighten.)

4. Recalibrate the instrument as per Section 4.6.

4.8 Instrument Advantages

The Photovac 2020 is easy to use in comparison to many other types of monitoring instrumentation. Its detection limit range is in the low parts-per-million range. Response rapidly reaches 90 percent scale of the indicated concentration (less than 3 seconds for benzene). This instrument's automated performance covers multiple monitoring functions simultaneously, incorporating data logging capabilities.

4.9 Limitations of the Photovac 2020 Photoionization Monitor

- Because the 2020 is a nonspecific total gas/vapor detector, it cannot be used to identify unknown chemicals; it can only quantitate them in relationship to a calibration standard (relative response ratio).

- For appropriate application of the 2020, ionization potentials of suspected contaminants must be known.

- Because the types of compounds that the 2020 can potentially detect are only a fraction of the chemicals possibly present at a hazardous waste site or incident, a background or zero reading on this instrument does not necessarily signify the absence of air contaminants.

- The 2020 instrument can only monitor certain vapors and gases in air. Many nonvolatile liquids, toxic solids, particulates, and other toxic gases and vapors cannot be detected.

- PIDs are generally not specific. Their response to different compounds is relative to the calibration gas used. This is referred to as relative response ratio. Instrument readings may be higher or lower than the true concentration. This can be an especially serious problem when monitoring for total contaminant concentrations if several different compounds are being detected at once.

- The 2020 is a small, portable instrument that cannot be expected to yield results as accurately as laboratory instruments.

4.9.1 Variables Affecting Monitoring Data

Monitoring a hazardous waste site environment can pose a significant challenge in assessing airborne concentrations and the potential threats to site personnel. Several variables may influence both dispersion and the instrument's ability to detect actual concentrations. Some of the variables, which may impact these conditions, are as follows:

- Temperature - Changes in temperature or pressure will influence volatization and affect airborne concentrations. Additionally, an increase or decrease in temperature ranges may have an adverse effect on the instrument's ability to detect airborne concentrations.

- Humidity - Excessive levels of humidity may interfere with the accuracy of monitoring results.

- Rainfall - Through increased barometric pressure and water, rainfall may influence dispersion pathways affecting airborne emissions.

- Electromagnetic interference - High voltage sources, generators, other electrical equipment may interfere with the operation and accuracy of direct-reading monitoring instruments.

5.0 TROUBLESHOOTING

5.1 <u>Fault Messages</u>

When the "Fault" status is displayed, the 2020's operation is compromised.

Fault 1: Signal from zero gas is too high.

Cause: If another fault occurred while the 2020 was setting its zero point, then this fault is displayed.
Action: Ensure no faults are occurring and calibrate the 2020 again.

Cause: Contamination of sample line, sample probe, or fittings before the detector.

Action: Clean or replace the sample line, sample probe, or the inlet filter.

Cause: Span gas and zero air are switched.

Action: Ensure clean air is used to zero the 2020. If you are using gas bags, mark the calibration and zero gas bags clearly.

Cause: Ambient air is contaminated.

Action: If you are unsure about the quality of ambient air, use a supply of commercial zero grade air to zero the 2020.

Fault 2: Signal from span gas is too small.

Cause: Operator may have switched the span gas and zero air.

Action: Ensure clean air is used to zero the 2020. If you are using gas bags, mark the calibration and zero gas bags clearly.

Action: Ensure the span gas is of a reliable concentration.

Cause: UV lamp window is dirty.

Note: Do not remove the detector lamp in a hazardous location.

Action: Clean the UV lamp window.

Cause: UV lamp is failing.

Note: Do not remove or replace the detector lamp in a hazardous location.

Action: Install a new UV lamp.

Cause: Incompatible application.

Action: The concentration and sample gas are incompatible for use with the 2020.

Fault 3: UV lamp fault. UV lamp has not started.

Cause: The UV lamp has not started immediately.

Action: This fault may be seen momentarily when 2020 is first turned on. Allow 30 to 60 seconds for the UV lamp to start and the fault to clear.

Cause: The UV lamp serial number label is blocking the photocell.

Note: Do not remove or replace the detector lamp in a hazardous location.

Action: If you have a UV lamp with a white serial number label, it is possible that the label is blocking the photocell. Rotate the lamp approximately 90 degrees and then try to start the 2020 again. If the fault persists, replace the lamp.

Cause: the UV lamp is not installed.

Note: Do not remove or replace the detector lamp in a hazardous location.

Action: Install a UV lamp.

Cause: The UV lamp has failed.

Note: Do not remove or replace the detector lamp in a hazardous location.

Action: Install a new UV lamp.

Cause: Electronic problem.

Action: If a new UV lamp still generates this fault, then contact the Photovac Service Department.

Fault 4: Pump current too low or too high.

Cause: If the pump sounds labored, then the pump is operating beyond normal operating parameters.

Action: Check for an obstruction in the sample line. Make sure sample line, sample probe, or inlet filter are not plugged.

Note: Do not replace the inlet filter in a hazardous location.

Action: Replace the inlet filter.

Action: Ensure the sample outlet, located on the underside of the 2020, is not obstructed.

Cause: The UV lamp is too wide, causing flow to be restricted.

Note: Do not remove or replace the detector lamp in a hazardous location.

Action: If you have a UV lamp with a white serial number label, it is possible that the lamp is too wide for the lampholder. Contact the TtNUS equipment manager.

Cause: The 2020 has been exposed to a solvent that can pass through the inlet filter and liquid has been aspirated.

Action: Contact the TtNUS equipment manager.

Cause: The pump has failed.

Action: Contact the TtNUS equipment manager.

5.2 Specific Problems

Problem: Very low or no instrument response detected, yet compounds are known to be present.

Cause: The 2020 has not been calibrated properly.

Action: Ensure the calibration gas is of a reliable concentration and then calibrate the instrument as outlined in Section 4.6 of the User's Manual. After the instrument has been calibrated, sample the bag of calibration gas. A reading equivalent to the calibration gas should be displayed. If not, contact the TtNUS equipment manager.

Note: Do not remove or recharge the battery pack in a hazardous location.

Action: Disconnect the battery charger before calibrating the 2020.

Cause: Calibration memories have not been programmed correctly.

Action: Program all the calibration memories you require for your application. You must use the correct calibration gas and concentration for each Cal Memory.

Cause: The response factor has been set to zero.

Action: Enter the correct response factor. Refer to Appendix 8.6 for a list of response factors. If the compound is not listed in Appendix 8.6 or you are measuring gas mixtures, then enter a value of 1.0. See User's Manual provided by the manufacturer.

Cause: You are not using the correct Cal Memory.

Action: Select the correct Cal Memory for your application.

Note: It does not matter which Cal Memory is selected or which response factor is entered. The 2020's response is not specific to any one compound. The reading displayed represents the total concentration of all ionizable compounds in the sample.

Cause: Detector is leaking. A decrease in sensitivity may be due to a leak in the detector.

Note: Do not remove or replace the detection lamp in a hazardous location.

Action: Ensure the UV lamp has been installed correctly.

Action: Ensure the lamp cover has been tightened down. Do not overtighten the cover.

Action: Ensure the o-ring seal on the lamp cover is positioned correctly.

Cause: The UV lamp is too long, causing flow to be restricted.

Note: Do not remove or replace the detector lamp in a hazardous location.

Action: If you have a UV lamp with a white serial number label, it is possible that the lamp is too long for the lampholder. Replace the lamp and contact the TtNUS equipment manager.

Cause: UV lamp is too wide, causing flow to be restricted.

Note: Do not remove or replace the detector lamp in a hazardous location.

Action: If you have a UV lamp with a white serial number label, it is possible that the lamp is too wide for the lampholder. Contact the TtNUS equipment manager.

Cause: The sampling environment is extremely humid.

Action: Water vapor is not ionized by the PID, but it does scatter and absorb the light and results in a lower reading. The 2020 detector has been designed to operate under high humidity conditions. Under extreme conditions, you may notice decreased response due to humidity.

Cause: The UV lamp is failing.

Note: Do not remove or replace the detector lamp in a hazardous location.

Action: High concentration of non-ionizable compounds. Chemical compounds, such as methane, with IPs greater than the 10.6 eV scatter and absorb the UV light. Sensitivity may be decreased significantly. Application with high backgrounds of such materials may be incompatible with the 2020. Contact the Photovac Applications Group for more information.

Problem: Erroneously high readings.

Cause: Sampling environment is extremely humid.

Action: Water vapor may contain mineral salts, which carry a charge. The water vapor becomes an electrolytic solution, which becomes ionized when it enters the detector. Atmospheric water in areas around the sea or stagnant water may produce a response in the absence of contaminants. The same effect may be seen when conducting ground water investigations in areas where the water is hard because it contains a significant concentration of minerals.

Cause: The 2020 has not been calibrated properly.

Action: Ensure the calibration gas is of a reliable concentration and then calibrate the instrument as outlined in Section 4.6. After the instrument has been calibrated, sample the bag of calibration gas. A reading equivalent to the calibration gas should be displayed. If not, contact the TtNUS equipment manager.

Cause: Cal Memories have not been programmed correctly.

Action: Program all the Cal Memories you require for your application. You must use the correct calibration gas and concentration for each Cal Memory. See Section 3.4 of the User's Manual.

Cause: You are not using the correct Cal Memory.

Action: Select the correct Cal Memory for your application. See Section 3.2.2 or 3.3.2 of the User's Manual.

Note: It does not matter which Cal Memory is selected or which response factor is entered. The 2020's response is not specific to any one compound. The reading displayed represents the total concentration of all ionizable compounds in the sample.

Cause: The detector has been short circuited by foreign matter in the detector cell.

Note: Do not service the 2020 in a hazardous location.

Action: Do not touch the wire grid inside the detector cell. Use a gentle jet of compressed air to remove any dust in the detector cell.

Warning: Do not insert any object, other than the UV lamp, into the lampholder.

Cause: There is an undetermined problem.

Action: Contact the TtNUS equipment manager.

Problem: Date and time settings are not retained.

Cause: The battery pack was removed before the 2020 was turned off.

Note: Do not remove or recharge the battery pack in a hazardous location.

Action: Replace the battery pack and reset the time and date. Ensure that the 2020 has been turned off before removing the battery pack.

Cause: The 2020 has not been used for 3 months or more and the internal battery (not the external battery pack) has discharged.

Note: Do not remove or recharge the battery pack in a hazardous location.

Action: Connect the 2020 to the AC adapter and turn the 2020 on. Turn the pump off. While the 2020 is running, the internal battery is charging. Leave the instrument running for approximately 24 hours.

Problem: Instrument status shows "Over."

Cause: High concentrations of gases and vapors will cause a rapid change in signal level. The detector and associated electronics may become temporarily saturated.

Action: Wait a few seconds for the status to return to normal. PIDs are designed to detect relatively low concentrations of gases and vapors. Exposure to very high concentrations may result in a very high or maximum response.

Cause: The detector has become saturated.

Action: Move the 2020 to a location where it can sample clean air. Sample clean air until the reading stabilizes around 0.

Cause: Detector has been short circuited by foreign matter in the detector cell.

Note: Do not service the 2020 in a hazardous location.

Action: Do not touch the wire grid inside the detector cell. Use a gentle jet of compressed air to remove any dust or dirt in the detector cell.

Warning: Do not insert any object, other than the UV lamp, into the lampholder.

Cause: There is an undetermined problem.

Action: Contact the TtNUS equipment manager.

Problem: Display is blank.

Cause: Battery pack is critically low.

Note: Do not remove or recharge the battery pack in a hazardous location.

Action: Replace the battery pack or connect the 2020 to the AC adapter.

Cause: The battery pack is not connected to the instrument correctly.

Action: Ensure the battery pack connector is securely attached to the connector on the 2020.

Cause: There is an undetermined problem.

Action: Reset the 2020. You must leave the instrument on while you disconnect the battery pack. This will reset the instrument. Reconnect the battery pack and close the battery hatch. Turn on the 2020, set the time and date, and program all the calibration memories that you are using.

Action: Contact the TtNUS equipment manager.

Problem: Sample flow rate is less than 300 ml/min.

Cause: The inlet filter is plugged.

Note: Do not replace the inlet filter in a hazardous location.

Action: Replace the inlet filter.

Cause: The inlet filter has not been installed properly.

Action: Ensure that the inlet filter has been installed correctly.

Cause: The UV lamp is too long, causing flow to be restricted.

Note: Do not remove or replace the detector lamp in a hazardous location.

Action: If you have a UV lamp with a white serial number label, it is possible that the lamp is too long for the lampholder. Replace the lamp and contact the TtNUS equipment manager.

Cause: The UV lamp is too wide, causing flow to be restricted.

Action: If you have a UV lamp with a white serial number label, it is possible that the lamp is too wide for the lampholder. Contact the TtNUS Equipment Manager.

Cause: The 2020 has been exposed to a solvent that can pass through the inlet filter and liquid has been aspirated.

Action: Contact the TtNUS equipment manager.

Cause: Sample outlet is obstructed.

Action: Ensure the sample outlet is not obstructed in any way.

Cause: Pump has been damaged.

Action: Contact the TtNUS equipment manager.

Problem: Liquid has been aspirated.

Cause: The 2020 has been exposed to a solvent that can pass through the inlet filter.

Action: Contact the TtNUS equipment manager.

Problem: Corrosive gases and vapors have been sampled.

Cause: The 2020 has been exposed to corrosive gases and vapors.

Action: Corrosive gases and vapors can affect the electrodes within the detector as well as the lamp window. Prolonged exposure to corrosive materials may result in permanent fogging or etching

of the window. If the 2020 is exposed to corrosive material, contact the TtNUS equipment manager.

6.0 SHIPPING

The Photovac may be shipped as cargo or carried on as luggage if there is no calibration gas cylinder accompanying the kit. When shipping or transporting the calibration gas, a Hazardous Airbill must be completed.

7.0 REFERENCES

Photovac 2020 Photoionization Monitor User's Manual, 1995.

8.0 ATTACHMENTS

1. Equipment Calibration Log

ATTACHMENT 1
EQUIPMENT CALIBRATION LOG

Tetra Tech NUS, Inc.

EQUIPMENT CALIBRATION LOG

PROJECT NAME : _____ INSTRUMENT NAME/MODEL: _____

SITE NAME: _____ MANUFACTURER: _____

PROJECT No.: _____ SERIAL NUMBER: _____

Date of Calibration	Instrument I.D. Number	Person Performing Calibration	Instrument Settings		Instrument Readings		Calibration Standard (Lot No.)	Remarks and Comments
			Pre-calibration	Post-calibration	Pre-calibration	Post-calibration		

STANDARD OPERATING PROCEDURE
NUMBER CTO166-07

BOREHOLE AND SOIL SAMPLE LOGGING

1.0 PURPOSE

This Standard Operating Procedure (SOP) describes the standard procedures and technical guidance on the logging of soil cores collected at the NSWC Crane facility.

2.0 FIELD FORMS AND EQUIPMENT

Knife
Ruler (marked in tenths and hundredths of feet)
Boring Log: An example of this form is attached.
Photoionization detector (PID) (see SOP 166-06)
Writing utensil

3.0 RESPONSIBILITIES

A field geologist or engineer is responsible for supervising all boring activities and assuring that each borehole is properly and completely logged.

4.0 PROCEDURES FOR BOREHOLE AND SAMPLE LOGGING

To maintain a consistent classification of soil, it is imperative that the field geologist understands and accurately uses the field classification system described in this SOP. This identification is based on visual examination and manual tests.

4.1 USCS Classification

Soils are to be classified according to the Unified Soil Classification System (USCS). This method of classification is detailed in Figure 1 (attached to this SOP).

This method of classification identifies soil types on the basis of grain size and cohesiveness.

Fine-grained soils, or fines, are smaller than the No. 200 sieve and are of two types: silt (M) and clay (C). Some classification systems define size ranges for these soil particles, but for field classification purposes, they are identified by their respective behaviors. Organic material (O) is a common component of soil but has no distinguishable size range; it is recognized by its composition. The careful study of the USCS will aid in developing the competence and consistency necessary for the classification of soils.

Coarse-grained soils will be divided into categories: rock fragments, sand, or gravel. The terms "sand" and "gravel" not only refer to the size of the soil particles but also to their depositional history. To insure accuracy in description, the term "rock fragments" will be used to indicate angular granular materials resulting from the breakup of rock. The sharp edges that are typically observed indicate little or no transport from their source area; and therefore, the term provides additional information in reconstructing the depositional environment of the soils encountered. When the term "rock fragments" is used, it will be followed by a size designation such as "(1/4 inchΦ-1/2 inchΦ)" or "coarse-sand size" either immediately after the entry or in the remarks column. The USCS classification would not be affected by this variation in terms.

4.2 Color

Soil colors will be described utilizing a single color descriptor preceded, when necessary, by a modifier to denote variations in shade or color mixtures. A soil could therefore be referred to as "gray" or "light gray" or "blue-gray." Because color can be utilized in correlating units between sampling locations, it is important for color descriptions to be consistent from one boring to another.

Colors must be described while the sample is still moist. Soil samples will be broken or split vertically to describe colors. Samplers tend to smear the sample surface, creating color variations between the sample interior and exterior.

The term "mottled" will be used to indicate soils irregularly marked with spots of different colors. Mottling in soils usually indicates poor aeration and lack of good drainage.

4.3 Relative Density and Consistency

To classify the relative density and/or consistency of a soil, the geologist is to first identify the soil type. Granular soils contain predominantly sands and gravels. They are noncohesive (particles do not adhere well when compressed). Finer-grained soils (silts and clays) are cohesive (particles will adhere together when compressed).

Granular soils are given the USCS classifications GW, GP, GM, SW, SP, SM, GC, or SC (see Figure 1).

The consistency of cohesive soils is determined by performing field tests and identifying the consistency as shown in the following table.

CONSISTENCY FOR COHESIVE SOILS

Consistency	Standard Penetration Resistance (Blows per Foot)	Unconfined Compressive Strength (Tons/Sq. Foot by pocket penetration)	Field Identification
Very soft	0 to 2	Less than 0.25	Easily penetrated several inches by fist.
Soft	2 to 4	0.25 to 0.50	Easily penetrated several inches by thumb.
Medium stiff	4 to 8	0.50 to 1.0	Can be penetrated several inches by thumb with moderate effort.
Stiff	8 to 15	1.0 to 2.0	Readily indented by thumb but penetrated only with great effort.
Very stiff	15 to 30	2.0 to 4.0	Readily indented by thumbnail.
Hard	Over 30	More than 4.0	Indented with difficulty by thumbnail.

Cohesive soils are given the USCS classifications ML, MH, CL, CH, OL, or OH (see Figure 1).

The consistency of cohesive soils is determined by hand by determining the resistance to penetration by the thumb. The thumb determination methods are conducted on a selected sample of the soil, preferably the lowest 0.5 foot of the sample. The sample will be broken in half and the thumb pushed into the end of the sample to determine the consistency. Do not determine consistency by attempting to penetrate a rock fragment. If the sample is decomposed rock, it is classified as a soft decomposed rock rather than a hard soil. One of the other methods will be used in conjunction with it. The designations used to describe the consistency of cohesive soils are shown in the above-listed table.

4.4 Weight Percentages

In nature, soils are consist of particles of varying size and shape and are combinations of the various grain types. The following terms are useful in the description of soil:

Terms of Identifying Proportion of the Component	Defining Range of Percentages by Weight
Trace	0 - 10 percent
Some	11 - 30 percent
Adjective form of the soil type (e.g., sandy)	31 - 50 percent

Examples:

- Silty fine sand: 50 to 69 percent fine sand, 31 to 50 percent silt.
- Medium to coarse sand, some silt: 70 to 80 percent medium to coarse sand, 11 to 30 percent silt.
- Fine sandy silt, trace clay: 50 to 68 percent silt, 31 to 49 percent fine sand, 1 to 10 percent clay.
- Clayey silt, some coarse sand: 70 to 89 percent clayey silt, 11 to 30 percent coarse sand.

4.5 Moisture

Moisture content is estimated in the field according to four categories: dry, moist, wet, and saturated. In dry soil, there appears to be little or no water. Saturated samples obviously have all the water they can hold. Moist and wet classifications are somewhat subjective and often are determined by the individual's judgment. A suggested parameter for this would be calling a soil wet if rolling it in the gloved hand or on a porous surface liberates water (i.e., dirties or muddies the surface). Whatever method is adopted for describing moisture, it is important that the method used by an individual remains consistent throughout an entire field activity.

4.6 Classification of Soil Grain Size for Chemical Analysis

To determine the gross grain size classification (e.g., clay, silt, and sand) from the USCS classification described above, the following table will be used.

Gross Soil Grain Size Classification	USCS Abbreviation	Description
Clay	CL	inorganic clays of low to medium plasticity, gravelly clays, sandy clays, silty clays, lean clays.
	CH	inorganic clays of high plasticity, fat clays.
	OH	organic clays of medium to high plasticity, organic silts.
Silt	ML	inorganic silts and very fine sands, rock four, silty or clayey fine sands with slight plasticity.
	OL	organic silts and organic silty clays of low plasticity..
	MH	inorganic silts, micaceous or diatomaceous fine sand or silty soils.

Gross Soil Grain Size Classification	USCS Abbreviation	Description
Sand	SW	well graded sands, gravelly sands, little or no fines.
	SP	poorly graded sands, gravelly sands, little or no fines.
	SM	silty sands, sand-silt mixtures.
	SC	clayey sands, sand-clay mixtures.

4.7 Summary of Soil Classification

In summary, soils will be classified in a similar manner by each geologist/engineer at a project site. The hierarchy of classification is as follows:

- Density and/or consistency
- Color
- Plasticity (optional)
- Soil types
- Moisture content
- Other distinguishing features
- Grain size
- Depositional environment

4.0 ATTACHMENTS

1. Figure 1 - Unified Soil Classification System
2. Boring Log

ATTACHMENT 1

FIGURE 1 - UNIFIED SOIL CLASSIFICATION SYSTEM

Unified Soil Classification System

Coarse Grained Soils (more than half of soil > No. 200 sieve)	Gravels (More than half of coarse fraction > no. 4 sieve size)	GW	Well graded gravels or gravel-sand mixtures, little or no fines
		GP	Poorly graded gravels or gravel-sand mixtures, little or no fines
		GM	Sandy gravels, gravel-sand-silt mixtures
		GC	Clayey gravels, gravel-sand-silt mixtures
	Sands (More than half of coarse fraction < no. 4 sieve size)	SW	Well graded sands or gravelly sands, little or no fines
		SP	Poorly graded sands or gravelly sands, little or no fines
		SM	Silty sands, sand-silt mixtures
		SC	Inorganic silts and very fine sands, rock flour, silty or clayey fine sands or clayey silts with slight plasticity
Fine Grained Soils (more than half of soil < No. 200 sieve)	Silts and Clays LL = < 50	ML	Inorganic silts and very fine sands, rock flour, silty fine sands or clayey silts with slight plasticity
		CL	Inorganic clays of low to medium plasticity, gravelly clays, sandy clays, lean clays
		OL	Organic silts and organic silty clays of low plasticity
	Silts and Clays LL = > 50	MH	Inorganic silts, micaceous or diatomaceous fine sand or silty soils, elastic silts
		CH	Inorganic silts of high plasticity, fat clays
		OH	Organic clays of high plasticity, organic silty clays, organic silts
Highly Organic Soils		Pt	Peat and other highly organic soils

Grain Size Chart

Classification	Range of Grain Sizes	
	U.S. Standard Sieve Size	Grain Size In Millimeters
Boulders	Above 12"	Above 305
Cobbles	12" to 3"	305 to 76.2
Gravel	3" to No. 4	76.2 to 7.76
coarse	3" to 3/4"	76.2 to 4.76
fine	3/4" to No.4	19.1 to 4.76
Sand	No. 4 to No. 200	4.76 to 0.074
coarse	No.4 to No. 10	4.76 to 2.00
medium	No. 10 to No. 40	2.00 to 0.420
fine	No. 40 to No. 200	0.420 to 0.074
Silt and Clay	Below No. 200	Below 0.074

Relative Density (SPT)

SANDS AND GRAVELS	BLOWS/FOOT
VERY LOOSE	0 – 4
LOOSE	4 – 10
MEDIUM DENSE	10 – 30
DENSE	32 – 50
VERY DENSE	OVER 50

Consistency (SPT)

SILTS AND CLAYS	BLOWS/FOOT
VERY SOFT	0 – 2
SOFT	2 – 4
MEDIUM STIFF	4 – 8
STIFF	8 – 16
VERY STIFF	16 – 22
HARD	OVER 32

ATTACHMENT 2

BORING LOG

Tetra Tech NUS, Inc.

BORING LOG

Page ___ of ___

PROJECT NAME: _____ BORING No.: _____
PROJECT NUMBER: _____ DATE: _____
DRILLING COMPANY: _____ GEOLOGIST: _____
DRILLING RIG: _____ DRILLER: _____

Sample No. and Type or RQD	Depth (Ft.) or Run No.	Blows / 6" or RQD (%)	Sample Recovery / Sample Length	Lithology Change (Depth/Ft.) or Screened Interval	MATERIAL DESCRIPTION: Soil Density/ Consistency or Rock Hardness	MATERIAL DESCRIPTION: Color	MATERIAL DESCRIPTION: Material Classification	USCS*	Remarks	PID/FID Reading (ppm): Sample	PID/FID Reading (ppm): Sampler BZ	PID/FID Reading (ppm): Borehole**	PID/FID Reading (ppm): Driller BZ**

* When rock coring, enter rock brokeness.
** Include monitor reading in 6 foot intervals @ borehole. Increase reading frequency if elevated reponse read.

Drilling Area Background (ppm): ____

Remarks: _____

Converted to Well: Yes _____ No _____ Well I.D. #: _____

STANDARD OPERATING PROCEDURE
NUMBER CTO166-08

SURFACE AND SUBSURFACE SOIL SAMPLING

1.0 PURPOSE

This Standard Operating Procedure (SOP) describes the procedures to be used for surface and subsurface soil sampling using direct-push technology (DPT) , split-barrel samplers, or hand augers during field activities at the NSWC Crane facility. This procedure also describes the collection of samples for analysis of volatile organic compounds (VOCs) using EnCore samplers and the use of field screening [i.e., photoionization detector (PID)] to select the most appropriate subsurface soil interval for VOC sampling.

2.0 REQUIRED FIELD FORMS AND EQUIPMENT

Writing utensil with indelible ink
Disposable medical-grade gloves (i.e. latex, nitrile)
Boring log
Soil sample logsheets
Stainless-steel mixing bowls
Stainless-steel trowel or soup spoon
Disposable trowels
EnCore handle and samplers
Required sample containers: All sample containers including shipping coolers for analysis by fix-based laboratories will be supplied and certified clean by the laboratory.
Required decontamination materials
Chain-of-custody records
Required personnel protective equipment (PPE)
Photoionization detector (PID) (see SOP 166-06)
Wooden stakes or pin flags
Survey tape
Marking Paint
Sealable polyethylene bags

Heavy-duty cooler

Ice

Razor knife

Geoprobe® and sampling equipment

Sample labels and tags

3.0 COLLECTION OF SOIL SAMPLES FOR VOLATILE ORGANIC COMPOUNDS (VOCs)

When soil cores are collected using DPT such as Geoprobe®, 2-foot soil intervals will be collected in clear acetate tubes, which can be extracted from the Geoprobe® core barrel (see SOP CTO166-04) upon retrieval at the surface.

3.1 Slit the acetate liner lengthwise with a razor knife, remove a section of the liner, and expose the length of the soil interval (see SOP CTO166-04).

3.2 Scan the soil core interval with a PID, slowly moving the intake nozzle along the length of the core where the acetate liner has been slit open. Note on the boring log the range of PID readings that are detected and the specific location(s) along the sample interval where above-background readings are encountered. If elevated volatile organics are measured via the PID, collect the VOC samples from the specific interval where the highest PID reading is measured. If no above-background PID readings are measured, then the VOC sample will be collected from a specific interval where visual signs of contamination (staining, etc.) are observed. If no above-background PID reading is measured and no discoloration or odor in the soil core indicates potential contamination, then collect the VOC sample from near the center of a core.

3.3 The 0- to 2-foot core interval will be collected as a surface soil sample. Determine where in this core interval the highest PID reading was encountered. Soil samples collected for volatile organics will be obtained directly from soil cores using four EnCore samplers for each VOC sample. These samples are to be collected by pushing the EnCore samplers directly into the soil core where the highest PID readings were measured, ensuring that the sampler is packed tight with soil and leaving no headspace between cap and container. All four EnCore sample containers will be collected as close to each other as possible. Make sure that all caps are securely fastened to the samplers and locked in place with both clips (see instructions that come with samplers). Write the sample identification on the strip labels that come with the samplers and place a label on each of the four samplers.

3.4 Place the four EnCore samplers in the ziplock pouches that come with the samplers and fill in appropriate information, including sample identification, date, time, and other information on the label. Place the four pouches in a plastic bag and place the tag on the bag, identifying the sample identification and other necessary information (see SOP CTO166-01).

3.5 Once the samples are properly labeled, bagged, and tagged, place the sample into the cooler containing ice and a trip blank. The cooler should be kept at 4°C and shipped to the analytical laboratory for preservation or extraction within 48 hours.

3.6 Fill in the required information on the Soil Sample Log Sheet (attached at the end of this SOP) and fill in the required information on the Chain-of-Custody (COC) Form.

3.7 Up to two additional subsurface soil samples will be collected from each boring. For these subsurface soil samples, the collected cores will be scanned with the PID before a specific depth is selected for VOC sampling. Choose the specific location within the collected cores that had the highest PID reading and proceed to collect four EnCore samples, as described above in 3.2 through 3.6. If readings are not elevated, samples will be collected from the center of each cored interval using the default sample depths identified in the QAPP. Place the samples in the cooler containing ice, after they have been properly labeled, bagged, and tagged.

4.0 COLLECTION OF OTHER SOIL SAMPLE ALIQUOTS

Note: A surface soil sample is collected from the 0- to 2-foot depth (i.e., one core length). Additional subsurface soil samples each consist of two 2-foot core segments.

4.1 After the VOC sample has been collected for the soil interval of interest (see 3.0 above), the remainder of the soil interval will be composited and used to fill the remainder of the sample containers. Any surface debris (e.g., herbaceous vegetation, twigs, rocks, litter, etc.) should first be removed from the top of the surface soil core. For other core intervals, the top 2 inches of each core should be discarded because it often contains material scraped from the side of the borehole and not fresh material from the bottom of the borehole.

4.2 Slide the remaining core material out of the acetate liner and into a clean, decontaminated stainless-steel mixing bowl. Mix the soil thoroughly with a stainless-steel spoon and remove gravel, large pebbles, and other coarse materials. Fill the required sample containers in the following order:

- Containers for organic analyses
- Container for metals
- Container for Nitrate
- Container for Nitrite

4.3 Complete all required information on the sample labels (see SOP CTO166-01).

4.4 Fill in all required information on the sample tag and secure the tag to the sample container.

4.5 Place the sample container in a ziplock plastic bag and seal shut. Place the bag in a cooler containing ice and cool to 4 ± 2°C.

4.6 Record the required information on the Soil Sample Log Sheet and the COC Record form.

5.0 COLLECTION OF SOIL SAMPLES FOR PCBS USING A HAND AUGER

5.1 Utilizing a properly decontaminated stainless steel trowel or disposable trowel, remove the sample material from the bucket bit and place into a properly decontaminated stainless steel mixing bowl . Mix the soil thoroughly and remove gravel, large pebbles, and other coarse materials. Fill the required sample containers for PCB analysis.

5.2 Complete all required information on the sample labels (see SOP CTO166-01).

5.3 Fill in all required information on the sample tag and secure the tag to the sample container.

5.4 Place the sample container in a ziplock plastic bag and seal shut. Place the bag in a cooler containing ice and cool to 4 ± 2°C.

5.5 Record the required information on the Soil Sample Log Sheet and the COC Record form.

6.0 PACKAGING AND SHIPPING OF SAMPLES

Samples will be packaged and shipped according to SOP CTO166-04.

7.0 ATTACHMENTS

1. Soil and Sediment Sample Log Sheet

ATTACHMENT 1

SOIL AND SEDIMENT SAMPLE LOG SHEET

Tetra Tech NUS, Inc.

SOIL & SEDIMENT SAMPLE LOG SHEET

Page___ of ___

Project Site Name: _____
Project No.: _____

[] Surface Soil
[] Subsurface Soil
[] Sediment
[] Other: _____
[] QA Sample Type: _____

Sample ID No.: _____
Sample Location: _____
Sampled By: _____
C.O.C. No.: _____

Type of Sample:
[] Low Concentration
[] High Concentration

GRAB SAMPLE DATA:

Date:	Depth Interval	Color	Description (Sand, Silt, Clay, Moisture, etc.)
Time:			
Method:			
Monitor Reading (ppm):			

COMPOSITE SAMPLE DATA:

Date:	Time	Depth Interval	Color	Description (Sand, Silt, Clay, Moisture, etc.)
Method:				
Monitor Readings:				
(Range in ppm):				

SAMPLE COLLECTION INFORMATION:

Analysis	Container Requirements	Collected	Other

OBSERVATIONS / NOTES:

MAP:

Circle if Applicable:

MS/MSD	Duplicate ID No.:

Signature(s):

STANDARD OPERATING PROCEDURE
NUMBER CTO166-09

INSPECTION AND REHABILITATION OF EXISTING MONITORING WELLS

1.0 PURPOSE

This Standard Operating Procedure (SOP) establishes procedures for the inspection and repair of existing monitoring wells at the NSWC Crane facility.

2.0 REQUIRED FIELD FORMS AND EQUIPMENT

The following equipment and field forms are required for inspection of existing monitoring wells.

Monitoring well inspection form: A copy of the monitoring well inspection form is attached.
Writing utensil with indelible ink
Bound field logbook
Well keys
Disposable medical-grade gloves (e.g., latex, nitrile)
Photoionization detector (PID)
Electronic water-level indicator
Steel rod (about 1 inch in diameter with eye bolt at one end)
100 feet of nylon rope
Internal pipe cutter
File, v notch

3.0 INSPECTION PROCEDURES

3.1 Record the well identification information (ID), date, and time on the Monitoring Well Inspection Form.

3.2 Record the condition of the well ID tag. Is the tag in place and legible? If not, note the discrepancies on the Monitoring Well Inspection Form.

3.3 Record the condition of the protective casing, caps, and lock. Has the casing, cap, and/or lock been tampered with or damaged? Has the well been damaged in any way or does it show signs of deterioration?

3.4 Record the condition of the concrete or gravel pads, if a pad is present. Check the condition of the pad (or the area around the well if no pad exists) and note any abnormalities. Are concrete pads cracking or heaving? If a gravel pad is present, is there any erosion or plant growth in the pad area?

3.5 Record the condition of the cement seal surrounding the protective casing. Has the seal cracked or pulled away from the protective casing? Record any visible signs of deterioration in the area of the seal.

3.6 Record the presence of depressions and/or standing water around the casing or pad.

3.7 Unlock the well cap and open the protective cover, if one exists.

3.8 Inspect and record the condition of the polyvinyl chloride (PVC) riser pipe and the surveyed reference point. The surveyed reference point is a V-notch on the top of the PVC riser pipe.

3.9 Measure the height of the protective casing and riser pipe above the ground surface. Record these readings on the inspection form to the nearest 0.01foot.

3.10 Check the existing well log to verify the total original depth of the monitoring well being inspected.

3.11 Open the well cap and use the PID to screen the air within the well opening to determine whether above-background levels of VOCs are present within the well. Refer to the Health & Safety Plan (HASP) for procedures to follow for the presence of VOCS in a well.

3.12 Lower the electronic water-level indicator probe down the well casing. If an obstruction is encountered, record the depth of the obstruction and whether the obstruction is partial or complete.

3.13 If no obstruction is encountered, continue lowering the water-level indicator down the well casing until ground water is encountered. Measure the depth to water to the nearest 0.01 foot (see SOP CTO166-17) and record the depth on the Inspection Log.

3.14 Continue lowering the indicator probe down the casing until a solid bottom is reached or an obstruction is encountered. Record the depth to the bottom of the well (from top of casing) on the Inspection Log.

3.15 If an obstruction is encountered in the casing before the well bottom is reached, record the depth of obstruction on the Inspection Log and whether the obstruction is partial or complete.

3.16 Remove the water-level indicator from the well.

3.17 If an obstruction was encountered during steps 3.12 or 3.14, lower a heavy steel rod slowly down the well casing until the obstruction is encountered. Attempt to loosen the obstruction by raising and dropping the steel rod, letting it hit the obstruction with gradually increasing force. Record whether the obstruction could be loosened.

3.18 If step 3.17 is performed, remove the steel rod from the well and remeasure the depth to the obstruction. If the obstruction has been knocked loose and settles to the bottom, then the well may still be used as a piezometer but will not be used for ground water sampling.

3.19 Close the well cap and lock, if lock is present.

3.20 Decontaminate the water-level indicator and steel rod, if used, per SOP CTO166-16.

3.21 Make recommendations on the Inspection Log, if necessary, for repair of the monitoring well. Replace lock, if needed, as soon as possible.

3.22 Perform repair of well as soon as possible.

4.0 Field Repairs to Monitoring Wells

Field repairs to monitoring wells, for the most part, will be limited to the repair of the PVC riser (inter case). If a monitoring well is damaged beyond the repair capabilities of the field crew, the NSWC Crane Environmental Department will be notified and a decision will be made to repair or replace the well using a drilling contractor.

4.1 Remove a short section of the top of the PVC riser that is broken, using an inside pipe cutter. Before the riser is cut, a clean rag will be inserted into the riser to just below the cut to prevent

cuttings from entering the well. Insert the cutter just below the damaged area and remove only the damaged section of riser. Carefully remove the rag, measure and record the length of riser removed and mark the top of the riser for water-level measurement (filing a V notch is the preferred method).

4.2 If the riser damage indicates that a riser must be added, a section of PVC may be attached to the existing riser. After removing the damaged riser (see 4.1 above), cut a new section of riser to the needed length and attach a slip coupler to one end. In most cases, the coupler will fit securely to the pipe without the need for mechanical fasteners (pop-rivets/screws). If needed, fasteners may be used, but in no case will glue be used to attach the coupler. Attach the new coupler and PVC pipe to the existing riser, mark the top for measurement purposes, and document the length of pipe added. All new materials (pipe and couplers) will be decontaminated prior to installation.

5.0 ATTACHMENTS

1. Monitoring Well Inspection Sheet

ATTACHMENT 1

MONITORING WELL INSPECTION SHEET

MONITORING WELL INSPECTION SHEET

Well ID: _____

Time: _____ **Date:** _____ **Inspector's Name:**

Inspection Item	Types of Problems	Status		Observation
		S	U	
Well Tag	Is it in-place, legible			
Well security	Condition protective case, cap, lock			
Well pad	Concrete or gravel & condition			
Well seal	Condition of...			
Area immediately around well pad	Record any evidence of/or standing water in area of well			
Dedicated sampling equipment	Condition of...			
PVC Riser	Condition of riser & survey reference point			

Comments:

Signature(s)_____

Note: S= Satisfactory, U= Unsatisfactory
Check one, if unsatisfactory explain

NSB-NLON
Field Form
Revision: 1
January: 1999

STANDARD OPERATING PROCEDURE
NUMBER CTO166-10

MONITORING WELL DEVELOPMENT

1.0 PURPOSE

This procedure provides general guidance and information pertaining to proper development of new and existing monitoring wells. The methods described herein are specific for monitoring wells located at the NSWC Crane facility. Guidelines by South Division, Naval Facilities Engineering Command, (SOUTHDIV NAVFAC, 1997) and the State of Indiana regulatory requirements in Article 16 Water Well Drillers of Chapter 310 of the Indiana Annotated Codes (310 IAC 16) should be consulted.

2.0 RESPONSIBILITIES

The drilling contractor will provide adequate and operable equipment, sufficient quantities of materials, and an experienced and efficient labor force capable of developing monitoring wells. The drilling contractor personnel must have all the health and safety training required to perform the work, as specified in the health and safety plan (HASP).

3.0 REQUIRED EQUIPMENT/ITEMS

The following list includes equipment and items required for monitoring well installation:

Health and safety equipment as required by the HASP and the site safety officer.

Well development equipment with associated materials (typically supplied by the driller).

Hydrogeologic equipment (weighted engineer's tape, water-level indicator, retractable engineers rule, electronic calculator, clipboard, mirror and flashlight for observing downhole activities, paint and ink marker for marking monitoring wells, sample jars, well installation forms, and a field notebook).

4.0 WELL DEVELOPMENT METHODS

The development of new wells will not occur until at least 48 hours after the well has been installed and grouted. This time is required so that the grout in the annulus can set and harden. The purpose of well development is to stabilize and increase the permeability of the sand pack and the well screen and to restore the permeability of the formation that may have been reduced by drilling operations. Wells are typically developed until all fine material and drilling water, if any, is removed from the well.

Sequential measurements of pH, specific conductance, turbidity, and temperature taken during development yield information (stabilized values) that sufficient development is reached. Development should proceed until criteria are met as stated in Navy Guidelines.

A surge plunger (also called a surge block) that is approximately the same diameter as the well casing will be used to agitate the water. There are two basic types of surge plungers, solid and valved surge plungers. Site-specific conditions will dictate which type will be used. In formations with low yields, a valved surge plunger may be preferred because solid plungers tend to force water out of the well at a greater rate than it will flow back in. Valved plungers are designed to produce a greater inflow than outflow of water during surging.

Surging causes water to move in and out of the screens. This movement of water pulls fine materials into the well, preventing bridging of sand particles in the gravel pack. These fine materials can then be removed by any of several methods such as submersible pumps (i.e. whale pumps), bailers, or even peristaltic pumps. Whale pumps can be used to surge and sweep the well screen as it pumps. Another alternative method for development would be to utilize a waterra (i.e. check valve method). This method allows for surging and purging of the well by moving the tubing in an up and down motion. On the downward stroke, the ball in the foot valve lifts and the tubing fills with water; and on the upward stroke the ball is set and surged ground water is forced out of the tubing and into a purge bucket.

Development should proceed until the following criteria are met:

- The well water is clear to the unaided eye.

and

- A minimum removal of five times the standing water volume in the well (to include the well screen and casing plus saturated borehole annulus, assuming 30% annular porosity).

or

- When pH measurements remain constant within 0.1 Standard Units and specific conductance and temperature vary no more than plus or minus 3 percent for at least three consecutive readings. Turbidity should also show stabilization and ideally be below 10 nephelometric turbidity units (NTUs).

or

- If the well has been purged dry at least three times while waiting 15 to 20 minutes to allow the well to recharge between pumping intervals. Recharge rates will be documented while the well is allowed to recover.

If for any reason the above criteria cannot be met, the site geologist should document the event in writing and consult with the Task Order Manager regarding an alternate plan of action.

Well development must be completed at least 24 hours before well sampling. The intent of this hiatus is to provide time for the newly installed well and backfill materials to sufficiently equilibrate to their new environment and for the new environment to re-stabilize after the disturbance of drilling. All development water should be handled in accordance with SOP CTO166-14.

5.0 ATTACHMENTS

1. Monitoring Well Development Record

ATTACHMENT 1

MONITORING WELL DEVELOPMENT RECORD

Tetra Tech NUS, Inc.

MONITORING WELL DEVELOPMENT RECORD

Page ___ of _____

Well: _____
Site: _____
Date Installed: _____
Date Developed: _____
Dev. Method: _____
Pump Type: _____

Depth to Bottom (ft.): _____
Static Water Level Before (ft.): _____
Static Water Level After (ft.): _____
Screen Length (ft.): _____
One Well Volume (gal/L): _____
Casing ID (in.): _____

Responsible Personnel: _____
Drilling Company: _____
Project Name: _____
Project Number: _____
PID Readings: Bore Hole_____ppm
PID Readings: Breathing Zone_____ppm

Time	Cumulative Water Volume (Gal.)	Flow Rate (mL/min.)	Water Level Readings (Ft. below TOC)	Temperature (Degrees C)	pH	Specific Conductance (Units _____)	Turbidity (NTU)	Remarks (odor, color, etc.)

STANDARD OPERATING PROCEDURE
NUMBER CTO166-11

DRILLING AND GEOLOGIC LOGGING OF BOREHOLES IN ROCK

1.0 PURPOSE

This procedure describes the methods and equipment necessary to drill rock borings and identify the equipment, sequence of events, and appropriate methods necessary to obtain rock cores and prepare boring logs during drilling activities. Up to five types of drilling methods will be used to drill boreholes at the NSWC Crane facility:

- Auger drilling may be used to drill through the overburden material and weathered bedrock.

Diamond bit coring techniques may be used to core through the bedrock. NX or similar size diamond core barrels will be used to collect 2- to 3-inch-diameter continuous rock core. These cores will be used to describe the lithologic characteristics and fracture distributions in the bedrock.

- Air-rotary drilling may be used to drill through the bedrock or to ream out core holes to a larger diameter to accommodate well installation.

- Rotary drilling with a water wash may be used to drill through the bedrock or to ream out core holes to a larger diameter to accommodate well installation.

- Rotosonic drilling and coring may be used to core through the bedrock. Four inch diameter rock core will be collected from these boreholes. These cores will also be used to describe the lithologic characteristics and fracture distributions in the bedrock.

2.0 RESPONSIBILITIES

Field Operations Leader (FOL) - The FOL is responsible for coordinating all on-site personnel and for providing technical assistance, when required. The FOL, or designee, will coordinate and lead all activities and will ensure the availability and maintenance of all materials and equipment. The FOL is responsible for the completion of all field activities and field and chain-of-custody documentation. The

FOL will assume custody of all samples and will ensure the proper handling and shipping of samples. The FOL is a highly experienced environmental professional who will report directly to the TtNUS Task Order Manager (TOM). Specific FOL responsibilities include the following:

- Function as a communications link among field staff members, the site quality assurance/quality control advisor, site safety officer, the site manager, and the TOM.
- Oversee the mobilization and demobilization of all field equipment and subcontractors.
- Coordinate and manage the field technical staff.
- Adhere to the work schedules provided by the TOM.
- Maintain the site logbook and field recordkeeping.
- Initiate field task modification requests, when necessary.
- Identify and resolve problems in the field, resolve difficulties in consultation with the NSWC Crane Site Manager, implement and document corrective action procedures, and provide communication between the field team and upper management.

Field Geologist - The field geologist is responsible for ensuring that standard and approved drilling procedures are followed. The field geologist will generate a detailed boring log for each borehole. This log will include a description of geologic materials, samples (if any), method of sampling, and other pertinent information and observations that may be obtained during drilling.

Drilling Subcontractor - The subcontractor operates under the supervision of the FOL. He or she is responsible for performing all work in accordance with the procedures outlined in the executed subcontract agreement.

Site Safety Officer – The site safety officer is responsible for clearing the drill site for underground and overhead utilities or other potentially hazardous obstructions.

3.0 PROCEDURES

3.1 General

The purpose of drilling boreholes is

- To determine the type, thickness, and certain physical and chemical properties of the soil, water, and rock strata that underlie the site.
- To install monitoring wells or piezometers.

All drilling and sampling equipment will be cleaned between samples and borings using appropriate decontamination procedures as outlined in SOP CTO166-17. Unless otherwise specified, it is generally advisable to drill borings at "clean" locations first and at the most contaminated locations last to reduce the risk of spreading contamination between locations. All borings must be logged by the site geologist as they proceed.

3.2 Rock Coring

Rock is cored by rotating and applying downward pressure hydraulically or with vibratory means using either diamond bit coring methods or Rotosonic techniques. A continuous core is collected in a core barrel in five to ten foot length sections called runs. Care should be taken during drilling to maximize recovery, and if necessary, shorter runs may be used to achieve this goal. Core diameter can be any size, but must be large enough to adequately evaluate the core. Reaming of the borehole may be necessary to accommodate well installation and backfill materials. After drilling the desired run length, remove the core barrel from the hole and take out the core.

Since rock structures and the occurrence of bedding planes, porosity type and distribution, and fracture patterns are among the most important items to be detected and described, take special care to obtain and record these features.

3.3 Rock Core Management and Labeling

When the core barrel has been recovered, the rock core will be carefully removed from the barrel, placed in a core tray (previously labeled "top" and "bottom" to avoid confusion), classified, and measured for percentage of recovery as well as the rock quality designation (RQD). Each core will be described, classified, and logged using a uniform system (Section 3.5 of this SOP).

Rock cores will be placed in the sequence of recovery in well-constructed wooden or cardboard boxes provided by the drilling contractor. Rock cores from two different borings will not be placed in the same core box. Partitions will be placed at the end of each core run. The depth from the surface of the boring to the top and bottom of the drill run and run number will be marked on the partitions with indelible ink. The partitions will serve to separate successive core runs and indicate depth intervals for each run. The order of placing cores will be the same in all core boxes. Rock core will be placed in the box so that, when the box is open, with the inside of the lid facing the observer, the top of the cored interval contained within the box is in the upper left corner of the box and the bottom of the cored interval is in the lower right corner of the box. The top and bottom of each core obtained and their true depths will be clearly and permanently marked on each box. The width of each row must be compatible with the core diameter to prevent lateral movement of the core in the box. Similarly, an empty space in a row will be filled with an appropriate filler material or spacers to prevent longitudinal movement of the core in the box.

The inside and outside of the core-box lid will be marked by indelible ink to show all pertinent data about the box's contents. At a minimum, the following information will be included:

Project name

- Project number
- Boring number
- Run numbers
- Footage (depths)
- Recovery
- RQD (%)
- Box number and total number of boxes for that boring (Example: Box 5 of 7)
-

For easy retrieval when core boxes are stacked, the sides and ends of the box will also be labeled and will include project name, number, boring number, top and bottom depths of core, and box number.

Before final closing of the core box, a photograph will be taken of the recovered core and the labeling on the inside cover will be taken. If moisture content is not critical, the core shall be wetted and wiped clean for the photograph. (This will help to show true colors and bedding features in the cores.)

3.4 Drilling Techniques that Generate Drill Cuttings

Some drilling methods may require classification and borehole logging based on identifying drill cuttings removed from the borehole. Such cuttings provide only general information on subsurface lithology. Some procedures that will be followed when logging cuttings are as follows:

- Obtain cutting samples at approximately 5-foot intervals and sieve and wash the cuttings to obtain a cleaner sample. Cuttings will be closely examined to determine general lithology.
- Note any change in color of drilling fluid or cuttings to estimate changes in lithology.
- Note drop or chattering of drilling tools or a change in the rate of drilling to determine fracture locations or lithologic changes.
- Observe loss or gain of drilling fluids or air (if air rotary methods are used) to identify potential fracture zones.
- Record this and any other useful information onto the boring log.

This logging provides a general description of subsurface lithology, and adequate information can be obtained through careful observation of the drilling process. It is recommended that rock core sampling methods be used at selected boring locations during the field investigation to provide detailed information to supplement the less-detailed data generated through borings drilled that generate drill cuttings.

3.5 Drill Cuttings Management and Labeling

Each 5 foot run of drill cuttings will be collected in plastic bags and logged for lithologic description. Each bag will be labeled with a magic marker with the boring number and depth interval. The cuttings will be retained for future correlation purposes and field reference until project completion, then will be discarded.

4.0 GEOLOGIC DESCRIPTION OF BOREHOLES IN ROCK

These procedures provide descriptions of the standard techniques for borehole and sample logging. These logging techniques will be used for each boring to provide consistent descriptions of subsurface lithology. While experience is the only method to develop confidence and accuracy in the description of

soil and rock, the field geologist or engineer can do a good job of classification by careful, thoughtful observation and by being consistent throughout the classification procedure.

The classification of soil and rocks is one of the most important jobs of the field geologist or engineer. To maintain a consistent flow of information, it is imperative that the field geologist or engineer understand and accurately use the field classification system described in this SOP. This identification is based on visual examination and manual tests.

4.1 Required Field Forms and Equipment

When logging soil and rock samples, the geologist or engineer should be equipped with the following:

Rock hammer
Knife
Camera
10% Dilute hydrochloric acid (HCl)
Ruler (marked in tenths and hundredths of feet)
Hand lens
Writing utensil with indelible ink
Field logbook
Disposable medical-grade gloves (e.g., latex, nitrile)
Soil/rock classification sheets
Strainer
Shovel

4.2 Classification of Rocks

Claystone - Very fine-grained rock made up of particle less than 1/256 mm in diameter. Fractures irregularly. Very smooth to touch. Generally has irregularly spaced pitting on surface of drilled cores.

Shale - A fissile, very fine-grained rock with particles less than 1/256 mm in diameter. Fractures along bedding planes.

Limestone - Rock made up predominantly of calcite ($CaCO_3$, which is mainly fossilized animal and plant debris). Effervesces strongly upon the application of dilute hydrochloric acid.

Coal – A very dark colored rock consisting mainly of organic (mainly fossilized plant debris) remains.

Others - Numerous other sedimentary rock types are present in lesser amounts in the stratigraphic record.

The local abundance of any of these rock types is dependent upon the depositional history of the area. Conglomerate, halite, gypsum, dolomite, anhydrite, lignite, etc. are some of the rock types found in lesser amounts.

In classifying a sedimentary rock, the following hierarchy will be noted: Rocks are grouped into three main divisions: sedimentary, igneous, and metamorphic. Sedimentary rocks are by far the predominant type exposed at the earth's surface and are the only type present at NSWC Crane. The following basic names are applied to the types of rocks found in sedimentary sequences:

Sandstone - Made up predominantly of granular materials ranging between 1/16 to 2 mm in diameter.

Siltstone - Made up of granular materials between 1/16 to 1/256 mm in diameter. Fractures irregularly. Medium thick to thick bedded.

4.2.1 Rock Type

As described above, there are numerous types of sedimentary rocks. In most cases, a rock will be a combination of several grain types; therefore, a modifier such as "sandy siltstone" or a "silty sandstone" can be used. The modifier indicates that a significant portion of the rock type is composed of the modifier. Other modifying descriptions can include carbonaceous, calcareous, siliceous, fossiliferous, etc.

Grain size is the basis for the classification of clastic (sandstones, siltstones, and shales) sedimentary rocks. The Udden-Wentworth classification will be assigned to sedimentary rocks (shown below). The individual boundaries are slightly different than the USGS subdivision for soil classification. For field determination of grain sizes, a scale can be used for the coarse-grained rocks. Alternatively, the division between siltstone and shale may be measurable in the field by the use of a hand lens. If the grains cannot be seen with the naked eye but are distinguishable with a hand lens, the rock is a siltstone. If the grains are not distinguishable with a hand lens, the rock is a shale.

GRAIN SIZE CLASSIFICATION FOR ROCKS

Particle Name	Grain Size Diameter
Cobbles	> 64 mm
Pebbles	4 - 64 mm
Granules	2 - 4 mm
Very Coarse Sand	1 - 2 mm
Coarse Sand	0.5 - 1 mm
Medium Sand	0.25 - 0.5 mm
Fine Sand	0.125 - 0.25 mm
Very Fine Sand	0.0625 - 0.125 mm
Silt	0.0039 - 0.0625 mm
After Wentworth, 1922	

4.2.2 Color

The color of a rock can be determined in a similar manner as for soil samples. Rock core samples will be classified while wet, when possible, and drill cuttings will be cleaned with water prior to color classifications. Since color can be utilized in correlating units between sampling locations, it is important for color descriptions to be consistent from one boring to another.

4.2.3 Bedding Thickness

The bedding thickness designations listed below will also be used for rock classification.

BEDDING THICKNESS CLASSIFICATION

Thickness (metric)	Thickness (Approximate English Equivalent)	Classification
> 1.0 meter	> 3.3'	Massive
30 cm - 1 meter	1.0' – 3.3'	Thick bedded
10 cm - 30 cm	4" - 1.0'	Medium bedded
3 cm - 10 cm	1" – 4"	Thin bedded
1 cm - 3 cm	2/5" - 1"	Very thin bedded
3 mm - 1 cm	1/8" – 2/5"	Laminated
1 mm - 3 mm	1/32" – 1/8"	Thinly laminated
< 1 mm	<1/32"	Micro laminated

(Ingram, 1954)

4.2.4 Hardness

The hardness of a rock is a function of the compaction, cementation, and mineralogical composition of the rock. A relative scale for sedimentary rock hardness is as follows:

Soft - Weathered, considerable erosion of core, easily gouged by screwdriver, scratched by fingernail. Soft rock crushes or deforms under pressure of a pressed hammer. This term is always used for the hardness of the saprolite (decomposed rock that occupies the zone between the lowest soil horizon and firm bedrock).

Medium soft - Slight erosion of core, slightly gouged by screwdriver, or breaks with crumbly edges from single hammer blow.

Medium hard - No core erosion, easily scratched by screwdriver, or breaks with sharp edges from single hammer blow.

Hard - Requires several hammer blows to break and has sharp conchoidal breaks. Cannot be scratched with screwdriver.

Note the difference in usage of the words "scratch" and "gouge." A scratch will be considered a slight depression in the rock (do not mistake the scraping off of rock flour from drilling with a scratch in the rock itself), and a gouge is much deeper.

4.2.5 Fracturing

Method of Calculating RQD
(After Deere, 1966)

Fractures should also be noted.

$$RQD\ \% = r/l \times 100$$

r = Total length of all pieces of the lithologic unit being measured that are greater than 4 inches in length and have resulted from natural breaks. Natural breaks include slickensides, joints, compaction slicks, bedding plane partings (not caused by drilling), friable zones, etc.

l = Total length of the coring run.

4.2.6 Weathering

The degree of weathering is a significant parameter that is important in determining weathering profiles and is also useful in engineering designs. The following terms can be applied to distinguish the degree of weathering:

Fresh - The rock shows little or no weathering effect. Fractures or joints have little or no staining and rock has a bright appearance.

Slight - The rock has some staining that may penetrate several centimeters into the rock. Clay filling of joints may occur. Feldspar grains may show some alteration. Oxidation and weathering may affect the degree of fracturing or brokenness of a rock. After eliminating drilling breaks, the average spacing of natural breaks is calculated and the fracturing is described by the following terms:

Very broken (V. BR.) - Less than 2-inch spacing between fractures
Broken (BR.) - 2-inch to 1-foot spacing between fractures
Blocky (BL.) - 1- to 3-foot spacing between fractures
Massive (M.) - 3- to 10-foot spacing between fractures

The structural integrity of the rock can be approximated by calculating the rock quality designation (RQD) of cores recovered. The RQD is determined by adding the total lengths of all pieces exceeding 4 inches and dividing by the total length of the coring run to obtain a percentage.

Moderate - Most of the rock, with exception of quartz grains, is stained. Rock is weakened due to weathering and can be easily broken with a hammer.

Severe - All rock including quartz grains is stained. Some of the rock is weathered to the extent of becoming a soil. Rock is very weak.

4.2.7 Other Characteristics

The following items will be included in the rock description:

Description of contact between two rock units. These can be sharp or gradational.

- Stratification (parallel, cross stratified).
- Description of any filled cavities or vugs.
- Cementation (calcareous, siliceous, hematitic).
- Description of any joints or open fractures.
- Observation of the presence of fossils.
- Notation of joints with depth, approximate angle to horizontal, any mineral filling or coating, and degree of weathering.

All information shown on the boring logs will be neat so it can be reproduced on a copy machine for report presentation. The data will be kept current to provide control of the drilling program and to indicate various areas requiring special consideration and sampling.

4.2.8 Additional Terms Used in the Description of Rock

The following terms are used to further identify rocks:

Seam - Thin (12 inches or less), probably continuous layer.

Some - Indicates significant (15 to 40 percent) amounts of the accessory material. For example, rock composed of seams of sandstone (70 percent) and shale (30 percent) would be "sandstone -- some shale seams."

Few - Indicates insignificant (0 to 15 percent) amounts of the accessory material. For example, rock composed of seam of sandstone (90 percent) and shale (10 percent) would be "sandstone -- few shale seams."

Interbedded - Used to indicate thin or very thin alternating seams of material occurring in approximately equal amounts. For example, rock composed of thin alternating seams of sandstone (50 percent) and shale (50 percent) would be "interbedded sandstone and shale."

Interlayered - Used to indicate thick alternating seams of material occurring in approximately equal amounts.

4.2.9 Abbreviations

Abbreviations may be used in the description of a rock. However, they will be kept at a minimum. Following are some of the abbreviations that may be used:

C	-	Coarse	Lt	-	Light	Yl	-	Yellow
Med	-	Medium	BR	-	Broken	Or	-	Orange
F	-	Fine	BL	-	Blocky	SS	-	Sandstone
V	-	Very	M	-	Massive	Sh	-	Shale
Sl	-	Slight	Br	-	Brown	LS	-	Limestone
Occ	-	Occasional	Bl	-	Black	Fgr	-	Fine-grained
Tr	-	Trace						

5.0 BORING LOGS AND DOCUMENTATION

This section describes in more detail the procedures to be used in completing boring logs in the field. Information obtained from the preceding sections will be used to complete the logs. A sample boring log is attached at the end of this SOP.

The field geologist or engineer will use this example as a guide in completing each boring log. Each boring log will be fully described by the geologist or engineer as the boring is being drilled. Every sheet contains space for 25 feet of log. Information regarding classification details is provided either on the back of the boring log or on a separate sheet, for field use. All data will be written directly on the boring log. Additional notes may be entered in a field notebook if more space is needed.

5.1 Remarks Column

The following information will be entered under the "Remarks" column and will include, but is not limited to, the following:

- Moisture - Estimate moisture content using the following terms: dry, moist, wet, and saturated. These terms are determined by the individual. Whatever method is used to determine moisture should be consistent throughout the log.

- Angularity - Describe angularity of coarse-grained particles using the terms angular, subangular, subrounded, or rounded. Refer to ASTM D 2488 or the Earth Manual for criteria for these terms.

- Particle shape - flat, elongated, or flat and elongated.

- Maximum particle size or dimension.

- Water-level observations.

- Reaction with HCl - none, weak, or strong.

Additional comments:

- Indicate presence of mica, caving of hole, when water was encountered, difficulty in drilling, loss or gain of water.

- Indicate odor and photoionization detector (PID) readings.

- Indicate any change in lithology by drawing a line through the lithology change column and indicate the depth. This will help when cross-sections are subsequently constructed.

- At the bottom of the page, indicate type of rig, drilling method, hammer size and drop, and any other useful information (i.e., borehole size, casing set, changes in drilling method).

- Vertical lines shall be drawn in the Material Description column from the bottom of each sample to the top of the next sample to indicate consistency of material from sample to sample, if the material is consistent. Horizontal lines will be drawn if there is a change in lithology, then vertical lines will be drawn to that point.

- Indicate screened interval of well, as needed, in the lithology column. Show top and bottom of screen. Other details of well construction are provided on the well construction forms.

5.2 Review

Upon completion of the borings logs, copies will be made and reviewed. Items to be reviewed include

- Checking for consistency of all logs
- Checking for conformance to the guideline
- Checking to see that all information is entered in their respective columns and spaces

Originals of the boring logs will be retained in the project files.

6.0 ATTACHMENTS

1. Boring Log

ATTACHMENT 1

BORING LOG

Tetra Tech NUS, Inc.

BORING LOG

Page ___ of ___

PROJECT NAME: _____ BORING No.: _____
PROJECT NUMBER: _____ DATE: _____
DRILLING COMPANY: _____ GEOLOGIST: _____
DRILLING RIG: _____ DRILLER: _____

Sample No. and Type or RQD	Depth (Ft.) or Run No.	Blows / 6" or RQD (%)	Sample Recovery / Sample Length	Lithology Change (Depth/Ft.) or Screened Interval	MATERIAL DESCRIPTION: Soil Density/ Consistency or Rock Hardness	Color*	Material Classification	USCS*	Remarks	PID/FID Reading (ppm): Sample	Sampler BZ	Borehole**	Driller BZ**

* When rock coring, enter rock brokeness.
** Include monitor reading in 6 foot intervals @ borehole. Increase reading frequency if elevated reponse read.

Remarks: _____ Drilling Area Background (ppm): ____

Converted to Well: Yes _____ No _____ Well I.D. #: _____

References

Deere, D.U. and Miller, R.P., (1966). Engineering Classification and Index Properties for Intact Rock, Air Force Weapons Lab. Tech. Report AFWL-TR-65-116, Kirtland Base, New Mexico.

Wentworth, C.K., 1922. A Scale of Grade and Class Terms for Caustic Sediments: Jour. Geology, v. 30, p. 377-392.

Ingram, R.L., 1954. Terminology for the Thickness of Stratification and Parting Units in Sedimentary Rocks: Geological Society of America Bulletin, v. 65. p. 937-938.

STANDARD OPERATING PROCEDURE
NUMBER CTO166-12

MONITORING WELL INSTALLATION

1.0 PURPOSE

This procedure provides general guidance and information pertaining to proper design and installation of ground water monitoring wells. The methods described herein are specific for monitoring well construction at the NSWC Crane facility. Guidelines by South Division, Naval Facilities Engineering Command (SOUTHNAVFACENGCOM, 1997) and the State of Indiana regulatory requirements in Article 16 Water Well Drillers of Chapter 310 of the Indiana Annotated Codes (310 IAC 16) were consulted during development of this procedure.

2.0 RESPONSIBILITIES

Field Operations Leader (FOL) - The FOL is responsible for coordinating all on-site personnel and for providing technical assistance, when required. The FOL, or designee, will coordinate and lead all activities and will ensure the availability and maintenance of all materials and equipment. The FOL is responsible for the completion of all field activities and field and chain-of-custody documentation. The FOL will assume custody of all samples and will ensure the proper handling and shipping of samples. The FOL is a highly experienced environmental professional who will report directly to the TtNUS Task Order Manager (TOM). Specific FOL responsibilities include the following:

- Function as a communications link among field staff members, the site quality assurance/quality control advisor, site safety officer, the site manager, and the TOM.
- Oversee the mobilization and demobilization of all field equipment and subcontractors.
- Coordinate and manage the field technical staff.
- Adhere to the work schedules provided by the TOM.
- Maintain the site logbook and field recordkeeping.

- Initiate field task modification requests, when necessary.

- Identify and resolve problems in the field, resolve difficulties in consultation with the NSWC Crane Site Manager, implement and document corrective action procedures, and provide communication between the field team and upper management.

Field Geologist - The field geologist supervises and documents well installation and construction performed by the driller and ensures that the screen interval for each monitoring well is properly placed to provide representative groundwater data from the monitored interval. Geotechnical engineers, field technicians, or other suitable trained personnel may also serve in this capacity.

Drilling Subcontractor - The subcontractor operates under the supervision of the FOL. He or she is responsible for performing all work in accordance with the procedures outlined in the executed subcontract agreement.

Site Safety Officer – The site safety officer is responsible for clearing the drill site for underground and overhead utilities or other potentially hazardous obstructions.

3.0 REQUIRED EQUIPMENT/ITEMS

The following list includes equipment and items required for monitoring well installation:

Health and safety equipment as required by the HASP and the site safety officer.

Well drilling and installation equipment with associated materials (typically supplied by the drilling subcontractor).

Hydrogeologic equipment (weighted engineer's tape, water-level indicator, retractable engineer's rule, electronic calculator, clipboard, mirror and flashlight for observing downhole activities, paint and ink marker for marking monitoring wells, sample jars, well installation forms, boring logs, soil sample log forms, chain-of-custody records, sample coolers with ice, and a field notebook).

4.0 WELL DESIGN AND CONSTRUCTION

Two basic types of wells may be drilled at NSWC Crane (Shallow and deep). Shallow wells include any well that is installed into the first water yielding zone encountered during drilling at a particular well

location. Deep wells include any wells that are installed below the first water yielding zone encountered during drilling at a particular well location. Typically, deep wells will be installed adjacent to shallow wells in cases when a vertical profile of groundwater contamination is desired at a particular location. The well construction techniques are identical between deep and shallow wells, however, all deep wells will have a minimum 6 inch inside diameter steel isolation casing placed to the bottom of the first water yielding zone that will be cemented in place with a cement-bentonite slurry and allowed to cure for a minimum of 24 hours. Drilling will resume inside the isolation casing after the grout cures. In this manner, the potential for shallow contamination in the first water yielding zone to migrate deeper is minimized.

Monitoring well borings will be drilled using a variety of techniques including hollow stem auger, rotary, rotosonic. Specific techniques are determined based on numerous issues including expected materials encountered during drilling, well depth, diameter, access, sampling requirements, etc.

Boreholes drilled in materials that tend to collapse drilling (overburden and / or weathered or highly fractured bedrock) may require the advancing of a hollow drilling tool (hollow stem auger, temporary casing, etc) to ensure that the borehole stays open during well installation. If this is the case, the hollow drilling tool will have a minimum inside diameter of 4 inches to accommodate the installation of the well construction materials, and will be retracted as well construction materials are installed to ensure adequate backfill of materials. In all cases, the final outside diameter of all well borings will be a minimum of 5 ½ inches.

All monitoring wells will be constructed of Schedule 40, flush-joint-threaded, 2-inch inside diameter polyvinyl chloride (PVC) riser pipe and flush joint threaded, factory slotted well screen with a threaded end cap. The well screens will be factory slotted to 0.020-inch size. Each section of well casing and screen will be National Sanitation Foundation (NSF) approved. Well screens will be 10 feet long but may be longer or shorter based on the subsurface conditions that are encountered. A PVC cap will be placed on the bottom and will also be flush threaded. Other means of joining casings using glue, gaskets, pop rivets, or screws are not allowed. The screen will pass no more than 10 percent of the pack material or in-situ aquifer material.

Monitoring wells will be installed immediately upon completion of drilling, A well screen section with bottom cap and the proper amount of riser pipe will be assembled and lowered down the borehole. Centralizers will be used as necessary to ensure that the casing and screen are centered and are aligned straight. The sand pack will be extended from 0.5 foot below the well screen to at least 1 foot above the top of the well screen. Clean silica sand of U.S. Standard Sieve Size No. 20 to 40 will be used.

A minimum 3-foot-thick bentonite pellet seal will be installed above the filter pack and allowed to hydrate for a minimum of 3 hours before grout is added above the seal. Only 100 percent, certified pure sodium bentonite will be used for well construction. As an alternative, a high solids bentonite grout can be used in lieu of the bentonite pellet to minimize downtime to allow for bentonite pellet seal hydration. The depths of backfill materials will be constantly monitored during well installation using a weighted stainless-steel or fiberglass tape measure.

The remaining annulus above the hydrated bentonite seal will be backfilled to the surface using a tremie pipe, with a 20:1 cement/bentonite grout. A maximum of 10 gallons of water per 94-pound bag of Type 1 cement will be used. The grout mixture should be blended in an above-ground rigid container or mixer to produce a thick lump-free mixture. This grout mixture will also be used for placement of steel casings in deep wells. A tremie grout will be used to install all grout unless the borehole is open and contains no standing water above the sand pack.

When the well is completed and grouted to the surface, a protective steel surface casing is placed over the top of the riser pipe. The finished well casing will extend at least 2 feet above the ground level. This casing will have a cap that can be locked to prevent vandalism. In addition, one hole is drilled just above the cement collar through the protective casing, which acts as a weep hole for the flow of water that may enter the annulus during well development, purging, or sampling. A 4 foot square and 6 inch thick concrete apron will be installed around each well. Four safety yellow barrier posts (nominal 4-inch diameter, 5 foot long steel pipes buried 2 feet deep and filled with concrete) will be cemented just outside the four corners of the concrete apron.

5.0 DOCUMENTATION OF FIELD ACTIVITIES

A critical part of monitoring well installation is recording of significant details and events in the site logbook, on field forms, and in a field logbook. Details of borehole logging are contained in SOP CTO166-11.

6.0 ATTACHMENTS

1. Bedrock Monitoring Well Sheet
2. Overburden Monitoring Well Sheet

ATTACHMENT 1

BEDROCK MONITORING WELL SHEET

Tetra Tech NUS, Inc.

BEDROCK MONITORING WELL SHEET

WELL No.: MS-53PC
PERMIT No: 638659

PROJECT:	NIROP FRIDLEY	DRILLING Co.:	BOART LONGYEAR	BORING No.:	MS-53PC
PROJECT No.:	7842 CTO 057	DRILLER:	K. SMITH	DATE COMPLETED:	10/25/99
SITE:	ANOKA PARK	DRILLING METHOD:	ROTOSONIC	NORTHING:	1077365.0
GEOLOGIST:	B. HOWZE	DEV. METHOD:	NITROGEN AIR LIFT	EASTING:	2811070.6

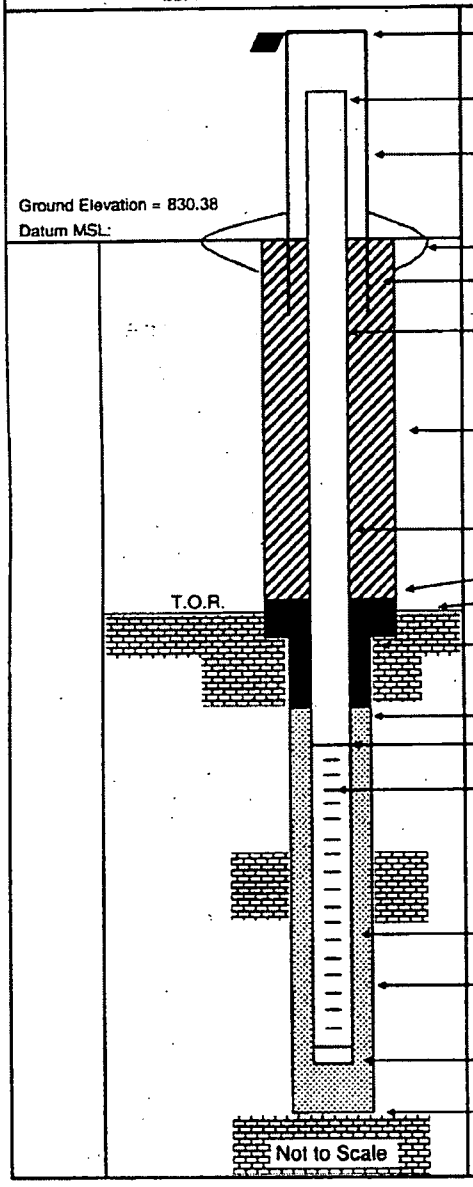

Elevation of Top of Casing:		
Stick Up of Casing Above Ground Surface:		
Elevation of Top of Riser:		832.64
I.D. of Surface Casing:	6"	
Type of Surface Casing:	STEEL	
Type of Surface Seal:	CONCRETE	
I.D. of Permanent Casing:	6"	
I.D. of Riser:	2"	
Type of Riser:	CARBON STEEL	
Borehole Diameter:	9 5/8"	
Type of Backfill:	CEMENT GROUT	
Elevation / Depth Top of Seal:		830.38/ 0.0
Elevation / Depth Top of Bedrock:		696.88/ 133.5
Type of Seal:	CEMENT GROUT	
Elevation / Depth of Top of Fine Sand:		685.38/ 145.0
Elevation / Depth of Top of Filter Pack:		681.38/ 149.0
Elevation / Depth of Top of Screen:		678.98/ 151.4
Type of Screen:	STAINLESS STEEL	
Slot Size x Length:	10 SLOT X 15.5'	
I.D. of Screen:	2"	
Type of Filter Pack:	No. 10-20 SAND	
Diameter of Hole in Bedrock: Core / Ream:	CORE = 5.5"	
Elevation / Depth of Bottom of Screen:		663.48/ 166.9
Elevation / Total Depth of Borehole:		660.38/ 170.0

ATTACHMENT 2

OVERBURDEN MONITORING WELL SHEET

BORING NO.: _____

Tetra Tech NUS, Inc. **OVERBURDEN MONITORING WELL SHEET**

PROJECT:	NIROP FRIDLEY	DRILLING Co.:		BORING No.:	
PROJECT No.:	7842 CTO 0057	DRILLER:		DATE COMPLETED:	
SITE:	ANOKA PARK	DRILLING METHOD:		NORTHING:	
GEOLOGIST:		DEV. METHOD:		EASTING:	

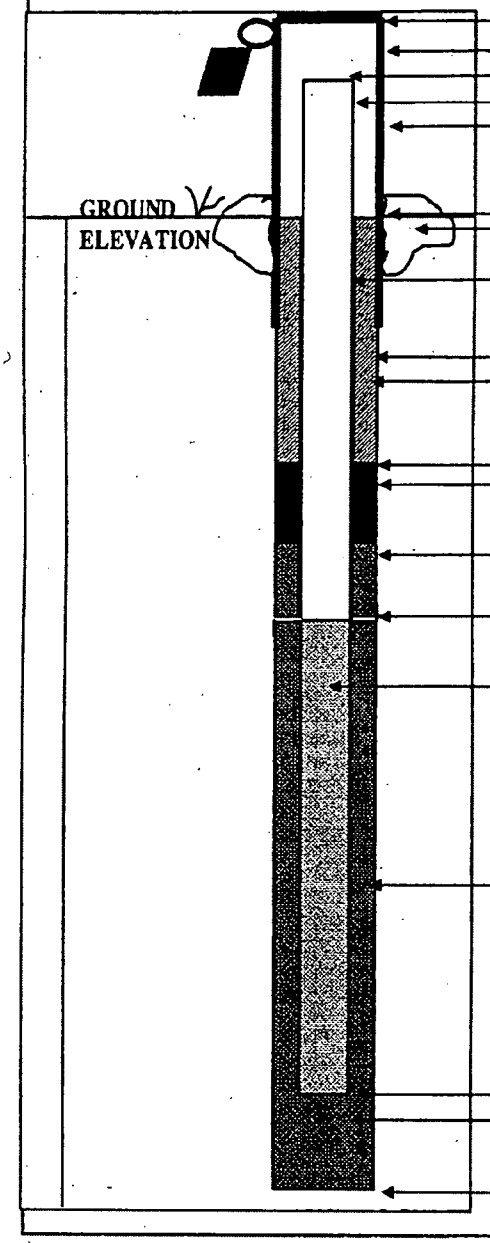

ELEVATION OF TOP OF SURFACE CASING: _____
STICK -UP TOP OF SURFACE CASING: _____
ELEVATION OF TOP OF RISER PIPE: _____
RISER STICK-UP ABOVE GROUND SURFACE: _____
I.D. OF SURFACE CASING: _____
TYPE OF SURFACE CASING: _____

GROUND ELEVATION: _____
TYPE OF SURFACE SEAL: _____

RISER PIPE I.D.: 2"
TYPE OF RISER PIPE: CARBON STEEL

BOREHOLE DIAMETER: _____
TYPE OF SEAL: _____

ELEVATION / DEPTH OF SEAL: _____ / _____
TYPE OF SEAL: BENTONITE CHIPS

ELEVATION / DEPTH TOP OF FILTER PACK: _____ / _____

ELEVATION / DEPTH TOP OF SCREEN: _____ / _____

TYPE OF SCREEN: CARBON STEEL

SLOT SIZE X LENGTH: 10 SLOT x

I.D. OF SCREEN: 2"

TYPE OF FILTER PACK: SILICA SAND
(No. 10-20 U.S. STANDARD SEIVE SIZE)

ELEVATION / DEPTH BOTTOM OF SCREEN: _____ / _____
ELEVATION / DEPTH BOTTOM OF FILTER PACK: _____ / _____
TYPE OF BACKFILL BELOW WELL: _____
ELEVATION / DEPTH OF BOREHOLE: _____ / _____

STANDARD OPERATING PROCEDURE
NUMBER CTO166-13

CALIBRATION AND CARE OF WATER QUALITY METERS

1.0 PURPOSE

This Standard Operating Procedure (SOP) establishes the procedures for the calibration and maintenance of field instruments used to measure water quality and for the proper documentation of calibration and maintenance. The YSI 600-Series Environmental Monitoring System will be used to measure pH, temperature, oxidation-reduction potential (ORP), specific conductance (SC), dissolved oxygen (DO), and turbidity in water. A LaMotte turbidity meter will be used in conjunction with the YSI to measure turbidity. The YSI meter has a multiprobe sensor that can be used in conjunction with a flow-through cell attached to a pump discharge tube to measure water-quality parameters in a ground water discharge or can be immersed in a surface water body such as a stream, pond, or drainage ditch. The LaMotte is a hand held meter that uses a multi-detector optical configuration to assure long term stability and minimize stray light and color interferences.

2.0 FIELD FORMS AND EQUIPMENT LIST

The following logbooks, forms, equipment, and supplies are required:

Site logbook
Equipment calibration log sheet
YSI Model 600 Serien and Sonde: multi-parameter water-quality meter with flow through cell
LaMotte Turbidity Meter
Equipment manual
Calibration kit
Deionized water, paper towels, spray bottle, etc.
Disposable medical-grade gloves (e.g., latex, nitrile)

3.0 PROCEDURES

This section describes the calibration procedures for the YSI Model 600 series and the LaMotte. Each meter is supplied with an instruction manual and will be on site and will be used as the calibration guidance documents. These procedures will list requirements for frequency of calibration and checks to be performed on the meter.

3.1 YSI Model 600 Series

The YSI Model 600 series and Sonde is a multi-parameter, water-quality meter that may be used to measure open water bodies (streams, ponds, springs, etc.) with the probe guard installed. With the flow through cell attached, the meter has the ability to measure water-quality parameters in ground water via a pump discharge line. By performing the measurements in the discharge line coming directly from the well, the parameters are measured before the ground water comes in contact with the atmosphere. The parameters measured by the YSI for this field effort are as follows:

- DO
- SC
- Temperature
- pH
- ORP
- Turbidity

3.1.1 Documentation

The Equipment Calibration Log is used to document calibration of measuring equipment used in the field. The Equipment Calibration Log documents that the manufacturer's instructions were followed for calibration of the equipment, including the frequency of calibration, type of standards used, and checks performed on calibration during the course of using the equipment. An Equipment Calibration Log must be maintained for each measuring device that requires calibration. Entries must be made for each day the equipment is used. A blank Equipment Calibration Log form is attached at the end of this SOP.

3.1.2 Calibration

All the parameters listed in Section 3.0 must be calibrated prior to the start of each field effort. After this initial calibration, the YSI will be checked each day that it is used. If the check shows any out-of-

specification readings, the specific probe will be recalibrated. Meter specifications can be found in the equipment manual, starting on page 248. Calibration and calibration checks will be documented in the field logbook and on the Equipment Calibration Log. The name, lot number, and expiration date for all calibration buffers and standards used will be recorded on the Equipment Calibration Log. The meter's model, serial number, and name of rental company will also be recorded on the equipment calibration form.

3.1.3 Tips for Good Calibration

- The DO calibration is a water-saturated air calibration. Make certain to loosen the calibration cup seal to allow pressure to equilibrate before calibrating.

- Make certain that sensors are completely submersed in solution and readings are stable when calibration values are entered.

- Use a small amount of calibration solution (previously used solution may be used, then discarded for this purpose) to pre-rinse the sonde.

- Fill a bucket with ambient temperature water to rinse the sonde between calibration solutions.

- Make sure to rinse and dry the probe between calibration solutions. This will reduce carry-over contamination and increase the accuracy of the calibration.

3.2 Lamotte Turbidity Meter

The Lamotte turbidity meter is a hand held meter that measures the amount of suspended matter in water using the Nephelometric method.

3.2.1 Documentation

The Equipment Calibration Log is used to document calibration of measuring equipment used in the field. The Equipment Calibration Log documents that the manufacturer's instructions were followed for calibration of the equipment, including the frequency of calibration, type of standards used, and checks performed on calibration during the course of using the equipment. An Equipment Calibration Log must be maintained for each measuring device that requires calibration. Entries must be made for each day the equipment is used. A blank Equipment Calibration Log form is attached at the end of this SOP.

3.2.2 Calibration

Turbidity must be calibrated prior to the start of each field effort. After this initial calibration, the LaMotte will be calibrated each day that it is used. If the check shows any out-of-specification readings, the meter will be recalibrated. Meter specifications can be found in the equipment manual. Calibration and calibration checks will be documented in the field logbook and on the Equipment Calibration Log. The name, lot number, and expiration date for all calibration standards used will be recorded on the Equipment Calibration Log. The meter's model, serial number, and name of rental company will also be recorded on the equipment calibration form.

3.2.2 Tips for Good Calibration

- Thoroughly clean the standard vial with a chem wipe to remove finger prints.
- Make sure that the vial is properly aligned according the manual recommendations.

4.0 MAINTENANCE

The YSI Meter and LaMotte will be rented for the duration of each brief field effort. Therefore, little field maintenance will be required. For any maintenance other than the routine cleaning, calibrating, or battery charging, the instrument should be returned to the vendor and a replacement sent immediately to the job site.

4.1 Meter Storage for the YSI

For this field effort, the meter storage will be short term, [i.e. over night or between work shifts (4-day break)]. During these breaks, the meter will be charged. One-half inch of tap or distilled water will be placed in the meter calibration cup and the cup threaded onto the sonde. The key for short-term storage of probes is to use a minimal amount of water so the calibration cup will remain at 100 percent humidity. The water level must be low enough so that none of the probes are actually immersed. Proper storage of the sonde between usage will extend its life and will also ensure that the unit is ready for use as quickly as possible for the next application.

Multi-parameter short term storage key points:

- Use enough water to provide humidity but not enough to cover the probe surfaces.
- Make sure the storage vessel is sealed to minimize evaporation.
- Check periodically to make certain that water is still present.

4.2 Probe Cleaning

- Rinse the probe thoroughly with potable water.
- Wash the probe in a mild solution of Liquinox and water and wipe with paper towels and/or cotton swabs.
- Rinse and soak the probe in deionized water.
- If stronger cleaning is required, consult Section 2.10 on page 89 of the equipment manual.

Note: Reagents that are used to calibrate and check the YSI may be hazardous. Review the health and safety plan, Appendix A of the equipment manual, and Material Safety Data Sheets (MSDSs), all of which are on file in the field trailer.

4.3 Meter Storage for the LaMotte

For this field effort, the meter storage will be short term, [i.e. over night or between work shifts (4-day break)]. Proper storage of the meter between usage will extend its life and will also ensure that the unit is ready for use as quickly as possible for the next application.

Short term storage key points:

- Make sure the storage vessel is moisture free and sealed.

4.4 Sample Vial Cleaning

- Rinse the vial thoroughly with potable water to remove sediments.
- Wipe with chem.-wipes or cotton swabs.

5.0 ATTACHMENTS

1. Documentation of Field Calibration
2. Equipment Calibration Log

ATTACHMENT 1
DOCUMENTATION OF FIELD CALIBRATION

Tetra Tech NUS, Inc.

DOCUMENTATION OF FIELD CALIBRATION

PROJECT NAME : _____ INSTRUMENT NAME/MODEL: _____

SITE NAME: _____ MANUFACTURER: _____

PROJECT No.: _____ SERIAL NUMBER: _____

Date of Calibration	Person Performing Calibration	INITIAL READINGS						FINAL READINGS						Calibration Standard (Lot No.)	Remarks and Comments
		PH	COND	TURB	DO	TEMP	SAL	PH	COND	TURB	DO	TEMP	SAL		

ATTACHMENT 2
EQUIPMENT CALIBRATION LOG

Tetra Tech NUS, Inc.

EQUIPMENT CALIBRATION LOG

PROJECT NAME : _____ INSTRUMENT NAME/MODEL: _____

SITE NAME: _____ MANUFACTURER: _____

PROJECT No.: _____ SERIAL NUMBER: _____

Date of Calibration	Instrument I.D. Number	Person Performing Calibration	Instrument Settings		Instrument Readings		Calibration Standard (Lot No.)	Remarks and Comments
			Pre-calibration	Post-calibration	Pre-calibration	Post-calibration		

STANDARD OPERATING PROCEDURE
NUMBER CTO166-14

MANAGEMENT OF INVESTIGATION-DERIVED WASTE

1.0 PURPOSE

This Standard Operating Procedure (SOP) describes how investigation-derived waste (IDW) will be collected, segregated, classified, and managed during the field investigations at the NSWC Crane facility. The following types of IDW will be generated during this investigation:

- Excess soil and rock materials remaining from subsurface drilling activities
- Well development water and purge water related to monitoring well installation and sampling
- Decontamination solutions
- Personal protective equipment and clothing (PPE)
- Miscellaneous trash and incidental items

2.0 REQUIRED FIELD FORMS AND EQUIPMENT

Health and safety equipment (with PPE)
Decontamination equipment
Field logbook and indelible ink pen
Plastic sheeting and/or tarps
55-gallon drums with sealable lids
IDW labels for drums
Wastewater container tanks
Plastic garbage bags

3.0 PROCEDURES

Management of IDW includes the collection, segregation, temporary storage, classification, final disposal, and documentation of the waste-handling activities.

3.1 Liquid Wastes

Liquid wastes that will be generated during the site activities include well development water, well purge water (collected during low-flow sampling), and decontamination solutions from drilling and sampling equipment. As they are collected, these wastewaters will be placed in a 300-gallon (or smaller) portable tank attached to a truck. Whenever the portable tank approaches full, it will be transported to a central location at NSWC Crane (adjacent to a Crane-designated sanitary sewer manhole). The water in the portable tank will be discharged to the sewer by gravity draining.

An accurate record will be kept by the FOL of all wastewaters that have been placed in the large holding tank. At a minimum, this information will include the following:

- The location and type of each water that has been placed in the tank (e.g., purge water from wells)
- The quantity of water from each source
- The date the wastewater was generated
- The date and time the wastewater was placed in the tank
- The person(s) present when the wastewaters were discharged to the sewer

3.2 Drill Cuttings and Cores

As cuttings are removed from borings, they will be screened for VOCs. If these results do not show above-background levels of VOCs, the cuttings materials will be mixed with bentonite and returned to the borehole when sampling activities in the hole are completed or spread on the ground in the area of the borehole. The backfill materials will be tamped as they are placed in the hole to increase density and reduce permeability of the backfill material.

If any soil materials from a screened borehole interval show evidence of contamination (based on the field screening results), then the soil material from the screened interval will be placed in a plastic trash bag (or directly in a drum if a larger quantity) and the bag will be tagged. Information included on the tag will consist of the hole from which the material came, the depth interval from which the material came, the date, and the name of the person filling out the tag. The bag will then be placed in a 55-gallon drum and sealed (more than one bag may be placed in a drum). The waste drums will be stored on site temporarily until laboratory results have been received concerning the soil samples that were collected from the suspect borehole. If the results indicate that no contamination is present in the soil samples, then the soils will be disposed on site. If the levels of contamination of any of the samples from a borehole exceed Toxicity Characteristic Leaching Procedure (TCLP) limits (using the total soil concentrations), then all

excess soil from the borehole will be considered as RCRA-hazardous and disposed off site in accordance with RCRA waste disposal regulations. Alternatively, the toxicity characteristic leaching procedure may be conducted for any constituent that could exceed the TC limits based on total concentrations.

Cuttings from well borings will be handled in the same manner as soil boring cuttings.

3.3 PPE, Pump Discharge Tubing, Direct-Push Technology (DPT) Sample Liners, and Incidental Trash

All PPE wastes, pump discharge tubes, DPT sample liners, and incidental trash materials (e.g., wrapping or packing materials from supply cartons, waste paper) will be decontaminated (if contaminated), double bagged, securely tied shut, and placed in a designated waste receptacle at NSWC Crane.

STANDARD OPERATING PROCEDURE
NUMBER CTO166-15

LOW-FLOW WELL PURGING AND STABILIZATION

1.0 PURPOSE

This Standard Operating Procedure (SOP) establishes the procedure for well purging and stabilization utilizing low-flow techniques.

2.0 REQUIRED FIELD FORMS AND EQUIPMENT

The following field forms and equipment are required for low-flow purging.

Low-Flow Purge Data Sheet: A copy of this form is attached at the end of this SOP.
Ground Water Sample Log Sheet: A copy of this form and instructions for its completion are included in SOP CTO166-05.
Bound field logbook
Writing utensil
Photoionization detector (PID): The procedures for the operation of the PID are found in the health and safety plan and SOP CTO166-06.
Well key
Electronic water-level indicator: The water-level indicator must have a cable of sufficient length to reach the water surface and be capable of measurements of 0.01 foot (see SOP CTO166-17).
Electronic Programmable Controller, model 400: This controller regulates air flow in a bladder pump.
Cylinder of compressed nitrogen with regulator: Compressed gas serves as the power source for the bladder pump.
Multiple parameter water-quality meter: This unit measures and displays field parameters measured in the field including pH, dissolved oxygen, oxidation-reduction potential (ORP), temperature, and specific conductance (see SOP CTO166-13).
Flow-through cell adapter for water-quality meter
LaMotte Turbidity Meter: Used to measure turbidity (see SOP CTO166-13).
Purge water containers
Graduated cylinder and stopwatch: Used to calculate flow rate.

Decontamination supplies: SOP CTO166-16 describes required decontamination supplies.

Disposable medical-grade gloves (e.g., latex, nitrile)

3.0 PROCEDURES FOR WELL PURGING

3.1 Prior to mobilizing to the site, clean, check for proper operation, and calibrate above equipment in accordance with manufacturer requirements as necessary.

3.2 Follow the steps outlined in SOP CTO166-17 to obtain a static water-level measurement of the well to be purged. Record the information on the Ground Water Sample Log Sheet and the Low-Flow Purge Data Sheet. Leave the water-level meter suspended in the well casing.

3.3 Calculate one well casing volume as follows:

1. Obtain the total depth of the well by measurement.

2. Using the static water level determined in Step 3.2 of this SOP and the total depth of the well, calculate the well casing volume using the following formula:

$$V = (0.163)(T)(r^2)$$

where:

V	=	Static casing volume of well (in gallons).
T	=	Vertical height of water column (linear feet of water).
0.163	=	A constant conversion factor that compensates for the conversion of the casing radius from inches to feet, the conversion of cubic feet to gallons, and pi.
r	=	Inside radius of the well casing (in inches).

Note: For wells of 1-inch radius (2-inch diameter), V = 0.163 gallons per foot of water column.

3.4 Connect the pump controller to the well pump air supply (at the well cap) by following the instructions in the pump control manual. The pump controller must be turned off when it is being connected.

3.5 Connect the nitrogen cylinder to the pump controller. The nitrogen cylinder valve must be closed and the regulator line pressure set at zero pounds per square inch (psi) when it is being connected.

3.6 Following the instructions found in the water-quality meter manual, connect the flow-through cell to the pump discharge line (at the well cap).

3.7 Place the discharge tubing from the flow-through cell to direct the purge water discharge into the graduated cylinder or purge water container.

3.8 Following the instructions in the pump controller manual, start pumping water from the well.

3.9 Start with the initial pump rate set at approximately 0.1 liters per minute. Use the graduated cylinder and stopwatch to measure the pumping rate. Adjust pumping rates as necessary to prevent drawdown from exceeding 0.3 foot during purging. If no drawdown is noted, the pump rate may be increased (to a max of 0.4 liters per minute) to expedite the purging and sampling event. The pump rate will be reduced if turbidity is greater than 10 NTUs after all other field parameters have stabilized. If ground water is drawn down below the top of the well screen, purging will cease and the well will be allowed to recover before purging continues. Slow recovering wells will be identified and purged at the beginning of the workday. If possible, samples will be collected from these wells within the same 8-hour workday and no later than 24 hours after the start of purging.

The time to sample any given well will vary greatly due to the many variables associated with low flow purging and sampling:

- Stabilization of parameters
- Possible drawdown
- Analytical changes from quarter to quarter
- Varying QA sample requirements from quarter to quarter
- Variable pump rates

Normally, the time from the start of purging to the end of sampling will be between 1 and 4 hours.

3.10 Measure the well water level using the water-level meter every 5 minutes. Record the well water level on the Low-Flow Purge Data Form (attached at the end of this SOP).

3.11 Every 5 to 10 minutes, record on the Low-Flow Purge Data Form the water-quality parameters (pH, specific conductance, temperature, turbidity, oxidation-reduction potential, and dissolved oxygen) measured by the water-quality meter and turbidity meter. If the cell needs to be cleaned during purging operations, continue pumping (allow the pump to discharge into a container) and disconnect the cell. Rinse the cell with distilled water. After cleaning is completed, reconnect the flow-through cell and continue purging. Document the cell cleaning on the Low-Flow Purge Data Form.

3.12 Measure the flow rate using a graduated cylinder. Remeasure the flow rate any time the pump rate is adjusted.

3.13 During purging, check for the presence of bubbles in the flow-through cell. The presence of bubbles is an indication that connections are not tight. If bubbles are observed, check for loose connections.

3.14 Stabilization is achieved and sampling can begin when a minimum of one casing volume has been removed and three consecutive readings, taken at 5- to 10-minute intervals, are within the following limits:

- pH ± 0.1 standard units
- Specific conduct ± 3%
- Temperature ± 5%
- Turbidity less than 10 NTUs
- Dissolved oxygen ± 10%
- Oxidation-Reduction Potential (ORP) ± 10 mV

If the above conditions have still not been met after the well has been purged for 4 hours, purging will be considered complete and sampling can begin. Record the final well stabilization parameters from the Low-Flow Purge Data From onto the Ground Water Sample Log Form.

If there is a need to leave a well during purging, there are two options:

- One, if the sampler must move for 30 minutes or less but still has a clear line of sight to the well, the sampler may leave the pump running and watch the well from a distance until he or she is able to return to the well.

- Two, if for whatever reason, the sampler must stop purging for an extended period of time or a clear line of sight cannot be maintained, the pump and cell will be shut down. All equipment and supplies will be loaded into the sample vehicle, and the well will be secured before the sampler departs.

In both cases, the time purging was stopped and restarted will be noted on the Low-Flow Purge Data Form.

3.15 Rinse the flow-through cell, the water-quality meter probes, and the turbidity cell with analyte-free water and pack the cell and meters for transport.

4.0 ATTACHMENTS

1. Low-Flow Purge Data Sheet

ATTACHMENT 1

LOW-FLOW PURGE DATA SHEET

Tetra Tech NUS, Inc.

LOW FLOW PURGE DATA SHEET

PROJECT :
PROJECT NUMBER:
PROJECT SITE NAME:

WELL ID.:
DATE:
WEATHER:

Time (Hrs.)	Water Level (Ft. below TOC)	Volume (gal/L)	Flowrate (mL/min)	pH (S.U.)	Cond. (mS/cm)	Turb. (NTU)	DO (mg/L)	Temp. (Celsius)	ORP (mV)	Comments

Water Quality Meter (S/N)
Control Box Type (S/N)
Turbidity Meter (S/N)

Pump Intake Depth

SIGNATURE(S):

PAGE___OF___

STANDARD OPERATING PROCEDURE
NUMBER CTO166-16

DECONTAMINATION OF FIELD SAMPLING EQUIPMENT

1.0 PURPOSE

This Standard Operating Procedure (SOP) establishes the procedures to be followed when decontaminating non-dedicated field sampling equipment during the field investigations at the NSWC Crane facility.

2.0 REQUIRED FIELD FORMS AND EQUIPMENT

Waterproof pens
Non-latex rubber or plastic gloves
Cotton gloves
Field logbook
Potable water
Deionized water
LiquiNox detergent
Brushes, spray bottles, paper towels, etc.
55-gallon drum or other container to collect and transport decontamination fluids

3.0 DECONTAMINATION PROCEDURES

3.1 Don non-latex and/or cotton gloves and decontaminate sampling equipment (in accordance with the following steps) prior to field sampling and between samples.

3.2 Rinse the equipment with potable water. Rinsing may be conducted by spraying with water from a spray bottle or by dipping. Collect the potable water rinsate into a container.

3.3 Wash the equipment with a solution of LiquiNox detergent. Prepare the LiquiNox wash solution in accordance with the instructions on the LiquiNox container. Collect the LiquiNox wash solution into a container. Use brushes or sprays as appropriate for the equipment. If oily residue has

accumulated on the sampling equipment, remove the residue with a isopropanol wash and repeat the Liquinox wash.

3.4 Rinse the equipment with potable water. Rinsing may be conducted by spraying with water from a spray bottle or by dipping. Collect the potable water rinsate into a container.

3.5 Rinse the equipment with deionized water. Rinsing may be conducted by spraying with water from a spray bottle or by dipping. Collect the deionized water rinsate into a container.

3.6 Remove excess water by air drying, shaking, or by wiping with paper towels as necessary.

3.7 Document decontamination by recording it in the field logbook.

3.8 Containerized decontamination solutions will be managed in accordance with the procedures described in SOP CTO166-14 and the QAPP.

STANDARD OPERATING PROCEDURE
NUMBER CTO166-17

MEASUREMENT OF WATER LEVELS IN MONITORING WELLS

1.0 PURPOSE

This Standard Operating Procedure (SOP) establishes procedures for determining water levels in monitoring wells.

2.0 REQUIRED FIELD FORMS AND EQUIPMENT

The following equipment and field forms are required for determining water levels in monitoring wells.

Ground Water Level Measurement Form: A copy of the Ground Water Level Measurement Form is attached.
Bound field logbook
Photoionization detector (PID): Operation and calibration of the PID is discussed in SOP CTO166-06.
Well key
Writing utensil
Electronic water-level indicator: The water-level indicator must have a cable of sufficient length to reach the water surface and be capable of measurements of 0.01 foot.
Decontamination supplies: SOP CTO166-16 describes decontamination procedures including decontamination supplies.

3.0 WATER-LEVEL MEASUREMENT PROCEDURES

3.1 Check the operation of the electronic water-level indicator or interface meter.

3.2 Record the well identification (ID), date, and time (using military time) on the Ground Water-Level Measurement Form.

3.3 Unlock the well and remove the well cap.

3.4 Place the well cap on a clean piece of plastic.

3.5 Check the well for the presence of organic vapors in the 2-inch polyvinyl chloride (PVC) riser pipe as follows:

1. Calibration of the PID shall be done in accordance with the calibration procedures described in SOP CTO166-06. Calibration of the PID shall be done at the field office prior to entering the field.

2. Insert the PID sample inlet straw approximately 3 inches into the riser pipe.

3. Record the PID reading on the Ground Water Level Measurement Form. If the reading is less than concentrations specified in the site-specific HASP, proceed to step 3.6. If the reading is greater than the concentration specified in the HASP, measure the concentration in the breathing zone. If the concentration in the breathing zone is less than the concentration specified in the HASP, proceed to Step 3.6. If the reading is greater than the specified concentration, allow the riser pipe to ventilate for 10 minutes and repeat the measurement of breathing zone concentrations until the concentrations fall below the level specified in the HASP before proceeding to step 3.6.

3.6 Ensure that the water-level indicator probe has been decontaminated before use, in accordance with the procedures outlined in SOP CTO166-16.

3.7 Slowly lower the probe into the well riser pipe until an audible and/or visible signal is produced, indicating contact with the water surface.

3.8 Read the ground water-level measurement from the top of the inner casing at the surveyed reference point to the nearest 0.01 foot.

3.9 Record the water-level measurement on the Ground Water Level Measurement Form.

3.10 Wind the meter cable measuring tape back onto the spool.

3.11 Replace the well cap and lock.

3.12 Decontaminate the meter's probe and cable following the procedures outlined in SOP CTO166-16.

3.13 Containerize any decontamination fluids and PPE in accordance with the procedures described in SOP CTO166-15.

4.0 ATTACHMENTS

1. Ground Water Level Measurement Sheet

ATTACHMENT 1

GROUND WATER LEVEL MEASUREMENT SHEET

Tetra Tech NUS, Inc.

GROUNDWATER LEVEL MEASUREMENT SHEET

Project Name: _____ **Project No.:** _____
Location: _____ **Personnel:** _____
Weather Conditions: _____ **Measuring Device:** _____
Tidally Influenced: Yes ___ No ___ **Remarks:** _____

Well or Piezometer Number	Date	Time	Elevation of Reference Point (feet)*	Total Well Depth From TOC (feet)*	Water Level Indicator Reading (feet)*	Groundwater Elevation (feet)*	Comments

* All measurements to the nearest 0.01 foot

Page ____ of ____

STANDARD OPERATING PROCEDURE
NUMBER CTO166-18

SURFACE WATER SAMPLING

1.0 PURPOSE

This Standard Operating Procedure (SOP) establishes the procedure for collecting surface water samples at the NSWC Crane facility.

2.0 REQUIRED FIELD FORMS AND EQUIPMENT

Surface Water Sample Log Sheet: A copy of this form is attached at the end of this SOP.

Field logbook

Writing utensil

Multi-parameter water-quality meter: The water-quality meter is used for the measurement of dissolved oxygen, pH, specific conductance, temperature, oxidation-reduction potential, and turbidity (see SOP CTO166-13).

LaMotte Turbidity Meter: Used to measure turbidity in the field (see SOP CTO166-13)..

Disposable sample containers: Disposable sample containers are used to fill sample containers and transport sample(s) to a pump for filtering.

Labeled sample containers: Prelabeled, certified-clean sample containers will be provided by the laboratory that performs the analyses.

Sample tags: One tag is to be completed and attached to each sample container.

0.45-micron filter assembly: These are single-use filter cartridges used to filter samples scheduled for dissolved metals or dissolved thorium isotope analyses. The filters become investigation-derived waste (IDW) after one use.

Peristaltic pump

Silicon tubing

Ziploc-type plastic storage bags

Shipping containers (coolers)

Trip blank sample (if VOC samples are being collected)

Temperature blank

3.0 SURFACE WATER SAMPLING PROCEDURES

3.1 The same methods will be used to collect surface water and seep samples. Sampling will start at the downstream end of a stream and proceed to the farthest upstream location.

3.2 While standing downstream or from the bank, gently remove any floating leaves or twigs that may be present in a sample pool area in a manner that will not disturb the bottom sediment.

3.3 While standing downstream or from the bank, place the sample container in the water at the sampling location at a 45-degree angle and lower it to approximately half the sample pool depth. With the mouth of the container facing upstream, fill the container with water, being careful not to disturb the sediment.

3.4 All samples will be collected into certified-clean, pre-preserved bottles (if preservation is required for the analysis to be performed) supplied by the laboratory performing the analyses. Sample containers for volatile constituents (VOCs) must be completely filled so no headspace exists in the container. Other sample containers should <u>not</u> be filled completely; a small amount of air should be left at the top. Sample containers will be collected in the following sequence:

Volatile organic compounds (VOCs)
Other Organics
Total metals
Nitrate
Nitrite
Total suspended solids (TSS)
Dissolved metals

3.5 Record the date and time that the sample containers are filled on the Surface Water Sample Log Sheet, the sample labels, the sample tags, and the Chain-of-Custody Form.

3.6 After the sample label and sample tag are completed and checked, place the sample container into a ziploc-type plastic storage bag and place the plastic storage bag holding the sample container into a cooler containing ice.

3.7 Repeat steps 3.3 through 3.6 until all the sample bottles containing unfiltered samples have been filled.

3.8 Fill two 1-liter unpreserved polyethylene bottles. Use these bottles to transfer the sample for field filtering. Set up a peristaltic pump for filtering of the dissolved metals samples. Using new, clean, disposable silicone tubing and a 0.45-micron filter, place the intake tubing from the pump into the transfer bottle with the filter attached to the discharge end and start the pump. Pre-rinse the filter with approximately 50-mL of sample water prior to filling the sample containers.

3.9 Using the discharge from the filter cartridge, fill one 1-liter polyethylene sample bottle for dissolved metals. Repeat steps 3.8 and 3.9 for these sample containers.

3.10 Obtain measurements of dissolved oxygen, pH, specific conductance, temperature, turbidity, and oxidation-reduction potential using the multi-parameter water-quality meter and LaMotte Turbidity Meter (see SOP CTO166-13). Record the readings in the appropriate fields on the Surface Water Sample Log Sheet.

3.11 Estimate the flow rate of the stream or spring in accordance with SOP CTO166-20. This is an estimate only. Round the flow rate to the nearest 5 gallons and record this number on the Surface Water Sample Log Sheet.

3.12 Decontaminate all equipment and load the equipment and the sample cooler in the sample vehicle for transport.

4.0 ATTACHMENTS

1. Surface Water Sample Log Sheet

ATTACHMENT 1

SURFACE WATER SAMPLE LOG SHEET

Tetra Tech NUS, Inc. **SURFACE WATER SAMPLE LOG SHEET**

Page___ of ___

Project Site Name: _____
Project No.: _____

[] Stream
[] Spring
[] Pond
[] Lake
[] Other: _____
[] QA Sample Type: _____

Sample ID No.: _____
Sample Location: _____
Sampled By: _____
C.O.C. No.: _____

Type of Sample:
[] Low Concentration
[] High Concentration

SAMPLING DATA:

Date: / Time: / Depth: / Method:	Color Visual	pH Standard	S.C. mS/cm	Temp. Degrees C	Turbidity NTU	DO mg/l	Salinity %	ORP mV

SAMPLE COLLECTION INFORMATION:

Analysis	Preservative	Container Requirements	Collected

OBSERVATIONS / NOTES:

MAP:

Circle if Applicable:

MS/MSD	Duplicate ID No.:

Signature(s):

STANDARD OPERATING PROCEDURE
NUMBER CTO166-19

SEDIMENT SAMPLING

1.0 PURPOSE

This Standard Operating Procedure (SOP) establishes the procedure for sediment sampling at the NSWC Crane facility.

2.0 REQUIRED FIELD FORMS AND EQUIPMENT

The following field forms and equipment are required for sediment sampling.

Sediment Sample Log Forms: A copy of this form is attached at the end of this SOP.
Bound field logbook
Tags for each sample container
Disposable plastic trowels
Survey stakes and flagging: Used to mark sampling locations after completion of sampling.
Labeled sample containers: See SOP CTO166-01 for sample identification procedures. Sample containers are certified clean by the laboratory supplying the containers.
Plastic storage bags
Shipping containers (containing ice)
Surgical gloves
Indelible marker
Chain-of-Custody Form

3.0 SEDIMENT SAMPLE LOCATION SELECTION

In general, sediments composed of fine-grained materials with greater surface area available for adsorption are more desirable for sample selection. The fined-grained materials may act as a sink or reservoir for adsorbing heavy metals and organic contaminants even if surface runoff concentrations are below detection limits. Therefore, it is important to locate the specific sampling points where the sediment has the greatest percentage of fine particles. The sampling personnel will determine specific sampling locations with these goals in mind.

4.0 SEDIMENT SAMPLING PROCEDURES

4.1 The sampler will wear clean, disposable, surgical gloves during sampling activities.

4.2 Sampling locations for sediment will be chosen along stream channels and gullies where surface water is visibly flowing, if possible. At these locations, sediment samples will be collected from beneath the water surface at the water's edge. If water is not visibly present, then the sediment sample will be collected from an area of deposition where the finest sediment is present and the sediment is moist or wet.

4.3 A disposable plastic trowel or spoon will be used to clear vegetative matter, cobbles, and gravel from the surface of the sediment.

4.4 All sediment samples will be collected from a depth of 0 to 4 inches below the sediment surface. Sample jars for VOCs and AVS-SEM will be collected first by placing exposed sediment material directly in the appropriate sample jars. The sediment will not be stirred or homogenized prior to placement in the jars, and the sediment will be transferred to the jars with a minimum exposure to air. The jars will be filled to capacity in order to minimize the amount of residual air space in the containers. Separate jars will be used for VOCs and AVS-SEM analysis.

4.5 Use the trowel to dig up and homogenize the sediment in an 18-inch-diameter circular area that is 4 inches deep. Stir the sediment within the circular area; do not move the sediment outside the circle. Also, do not dig or stir sediment that is deeper than 4 inches below the sediment surface.

4.6 Use the same trowel or spoon to scoop the homogenized sediment into the requisite labeled sample containers.

4.7 Record the sample time (using military time) on the Sediment Sample Log Form and sample container labels and tags. Record all other information required on the labels and tags as specified by SOP CTO166-01.

4.8 Secure the tag to the neck of the sample container using a wire tie.

4.9 Place the tagged sample container into a plastic storage bag and then place the plastic storage bag holding the sample container into a cooler containing ice.

4.10 Record date, sampling site, site conditions, location map, and other information (e.g., presence and flow rate of water in channel) on the Sediment Collection Log Sheet. Enter the sample information onto the Chain-of-Custody Form in accordance with SOP CTO166-03.

4.11 Using an indelible marker, write the sample identification on a survey stake, and drive the stake into the ground at the sample location. Tack a piece of brightly colored flagging to the stake. In addition, tie a piece of flagging to an overhead tree branch or other eye-level object to improve the ability to relocate the sampling site in the future.

5.0 ATTACHMENTS

1. Soil and Sediment Sample Log Sheet

ATTACHMENT 1

SOIL AND SEDIMENT SAMPLE LOG SHEET

Tetra Tech NUS, Inc.

SOIL & SEDIMENT SAMPLE LOG SHEET

Page___ of ___

Project Site Name: _____
Project No.: _____

[] Surface Soil
[] Subsurface Soil
[] Sediment
[] Other: _____
[] QA Sample Type: _____

Sample ID No.: _____
Sample Location: _____
Sampled By: _____
C.O.C. No.: _____

Type of Sample:
[] Low Concentration
[] High Concentration

GRAB SAMPLE DATA:

Date:	Depth Interval	Color	Description (Sand, Silt, Clay, Moisture, etc.)
Time:			
Method:			
Monitor Reading (ppm):			

COMPOSITE SAMPLE DATA:

Date:	Time	Depth Interval	Color	Description (Sand, Silt, Clay, Moisture, etc.)
Method:				
Monitor Readings (Range in ppm):				

SAMPLE COLLECTION INFORMATION:

Analysis	Container Requirements	Collected	Other

OBSERVATIONS / NOTES:

MAP:

Circle if Applicable:

MS/MSD	Duplicate ID No.:

Signature(s):

STANDARD OPERATING PROCEDURE
NUMBER CTO166-20

ESTIMATING FLOW IN SMALL STREAMS

1.0 PURPOSE

This Standard Operating Procedure (SOP) provides technical guidance on the measurement of stream channel cross-section and flow in a small stream. Stream flow measurements will be obtained to evaluate the migration potential of contaminants in a stream channel. This method is applicable for free-flowing streams with uniform flow and widths greater than 3 feet and depths greater than about 6 inches. Stream flow rates will be measured at the same time as water-level measurements are collected.

2.0 REQUIRED FIELD FORMS AND EQUIPMENT

Measuring rod or yardstick
Measuring tape
Waders or rubber boots
Colored flagging tape
2x2 inch wooden stakes
Bound field logbook
Waterproof pen
Orange, apple, or small piece of wood
Surface Water Sample Log Sheet
Indelible marker
Stopwatch

3.0 PROCEDURES

3.1 Establish a transect across the stream, along a straight reach where the stream is relatively narrow and velocity across the stream is relatively uniform. Orient the transect perpendicular to the flow.

3.2 Mark both ends of the transect with colored plastic flagging tape. Tie the flagging to a tree branch or other elevated (about eye level) object. Drive wooden stakes into the ground at both ends of

transect and tack a short piece of brightly colored flagging to the stakes. Use a black marker to identify the transect number, which will be the same as the surface water sample location.

3.3 Measure the total distance across the stream with a measuring tape and record the stream width (in feet) in the field logbook.

3.4 Measure the depth of water in the stream at three or four points across the stream. Record these measurements and calculate an average depth. Record the average depth (in feet) in the field logbook.

3.5 Measure a distance of 20 feet upstream of the transect. Tie a piece of flagging on a tree branch or other visible location above the stream.

3.6 Go another 20 feet upstream and place the orange or apple in the center of the stream or where the water current is fastest.

3.7 Using a watch with a timer or a stopwatch, measure the length of time it takes the orange (or apple) to travel from the first marker flag to the transect location (distance of 20 feet). Record the time.

3.8 Repeat step 3.7 two more times. Record the readings and calculate an average time.

3.9 Calculate approximate flow rate in the stream channel by multiplying the stream width (from step 3.3) times the average depth (from step 3.4) times the average velocity (from step 3.8). Record the estimated flow rate (in ft^3/s) in the field logbook and on the Surface Water Sample Collection Log Sheet.

STANDARD OPERATING PROCEDURE
NUMBER CTO166-21

HYDRAULIC CONDUCTIVITY TESTING

1.0 PURPOSE

This Standard Operating Procedure (SOP) provides technical guidance for the performance and evaluation of an in-situ hydraulic conductivity testing (slug testing) in monitoring wells at the NSWC Crane facility.

2.0 REQUIRED FIELD FORMS AND EQUIPMENT

Solid slug
Pressure transducers and data recorder, including instruction manual
Manual water-level indicator
Hydraulic Conductivity Testing Data Sheet
Watch
Decontamination equipment and supplies
Field logbook
Measuring tape

3.0 PROCEDURES

Slug tests are short-term tests designed to provide approximate hydraulic conductivity values for the portion of a formation immediately surrounding the screened/open interval of a well or boring. These tests are much less accurate than pumping tests, because a much more localized area is involved. Therefore, a number of slug tests are typically performed and averaged to determine a representative hydraulic conductivity value for the formation tested. Performance of slug tests may be preferable to pumping tests in situations where handling of large volumes of contaminated water is a concern or when time or budget constraints preclude the more expensive and time-consuming setup and performance of a pumping test.

The procedure is summarized below:

3.1 Determine the total depth of the well using a weighted tape or other measuring device. A pressure transducer attached to a data logger will be placed in the well approximately 1 foot from the bottom of the well. The transducer will be positioned so that it is about 5 to 10 feet lower than the slug.

3.2 Record the well number, the transducer probe identification number being used, the PSI rating for each probe, the depth below top of casing where each probe is positioned, the static water level in the well, and any other information relative to the setup and performance of the slug test. Data and information should be recorded in a bound field notebook and on the Pumping Test Data Sheet.

3.3 A falling-head test can be performed where the slug is lowered into the well and the rate of water-level fall with respect to time is recorded until equilibrium is reached. A rising-head test can be performed where a slug is lowered into the well and the water is allowed to equilibrate, then the slug is removed and the rate of water-level rise is measured with respect to time. Falling head slug tests should only be performed in wells with fully submerged screens, and rising head slug tests can be performed in wells with either partially or fully submerged screens or open intervals.

3.4 Remove or insert the slug and immediately start the data logger. Record the starting time for the data logger on the hydraulic conductivity testing data sheet.

3.5 Manually measure the depth to water with a water depth indicator to estimate the rate of recovery while the data logger is in the sleep mode. Enter the reading onto the form sheet, along with the corresponding transducer reading from the same time.

3.6 Observe the water-level readings when the data logger can be read. Record the times and the readings on the form sheet.

3.7 Rate of recovery measurements shall be obtained from time zero (maximum change in water level) until water-level recovery exceeds 90 percent of the initial change in water level. In low-permeability formations, the test may be cut-off short of 90 percent recovery due to time constraints. Time intervals between water level readings will vary according to the rate of recovery of the well. For a moderately fast recovering well, water-level readings at 0, 0.1, 0.2, 0.3, 0.4, 0.5, 0.75, 1.0, 1.25, 1.5, 2.0, 2.5, 3.0, 4.0, . . . minutes may be required. With practice, readings at down to 0.05-minute (3 seconds) time intervals can be obtained with reasonable

accuracy, using a pressure transducer and hand-held readout. For wells that recover very fast, the pressure transducer and data logger can be set on a logarithmic recording interval. Time intervals between measurements can be extended for slow recovering wells. A typical schedule for measurements for a slow recovering well would be 0, 0.25, 0.5, 0.75, 1.0, 1.5, 2.0, 3.0, 4.0, 6.0, 8.0, 10.0, 15.0, 20.0, 30.0, . . . minutes from the beginning the test. Measurements will be taken from the top of the well casing.

3.8 Stop the test when equilibrium is reached and repeat as necessary to ensure reproducibility.

3.9 Remove the pressure transducer, the slug, and the cables from the well and thoroughly decontaminate, in accordance SOP CTO166-16.

3.10 Check all field notes, copy, and place into one file for each test. Download the data recorder as soon as possible and check data. Make an electronic file and paper file of all data and place with the file for evaluation later. Confirm that the data are usable for the intended analysis prior to leaving the field. Time and recovery should be field plotted on semilog graph paper to determine the data quality. The data set should plot along a sloped, straight line. If excessive data scatter is observed, the test should be rerun until acceptable results are obtained.

4.0 PERSONNEL

A qualified geologist or hydrogeologist, with experience with these test procedures and equipment, will be needed for each sampling team to carry out the hydraulic conductivity tests.

5.0 ATTACHMENTS

1. Hydraulic Conductivity Testing Data Sheet

ATTACHMENT 1

HYDRAULIC CONDUCTIVITY TESTING DATA SHEET

Tetra Tech NUS, Inc.

HYDRAULIC CONDUCTIVITY TESTING DATA SHEET

PROJECT NAME: ..... WELL/BORING NO.: .....

PROJECT NO.: ..... GEOLOGIST: .....

WELL DIAMETER: ..... SCREEN LENGTH/DEPTH: ..... TEST NO.: .....

STATIC WATER LEVEL (Depth/Elevation): ..... DATE: .....

TEST TYPE (Rising/Falling/Constant Head): ..... CHECKED: .....

METHOD OF INDUCING WATER LEVEL CHANGE: ..... PAGE ..... OF .....

REFERENCE PT. FOR WL MEAS. (Top of Casing, Transducer, etc.): .....

ELAPSED TIME (min. or sec.)	MEASURED WATER LEVEL (feet)	DRAWDOWN OR HEAD (ΔH) (feet)	ELAPSED TIME (min. or sec.)	MEASURED WATER LEVEL (feet)	DRAWDOWN OR HEAD (ΔH) (feet)

WELL SCHEMATIC

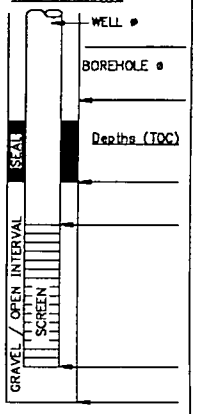

Indicate SWL Depth on Drawing

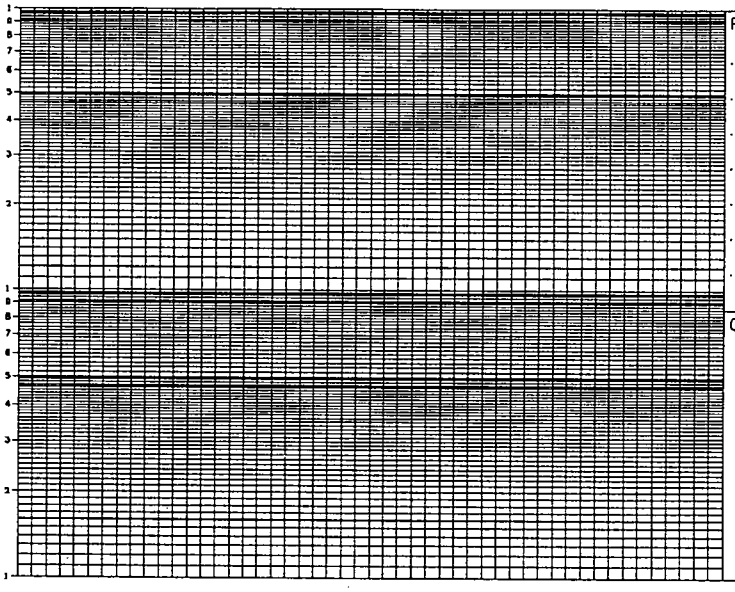

REMARKS:

.....

.....

.....

.....

.....

.....

.....

CALCS, SKETCH MAPS, ETC.:

ACAD:FORM_HYDCONTST.dwg 07/06/99 INL

STANDARD OPERATING PROCEDURE
NUMBER CTO166-22
FIELD TEST KIT ANALYSIS

1.0 PURPOSE

The purpose of this Standard Operating Procedure (SOP) is to establish the procedure for the field chemical analysis of parameters in ground water using field test kits. The following parameters are included in this SOP:

- Alkalinity
- Carbon Dioxide
- Dissolved Oxygen
- Ferrous Iron
- Hydrogen Sulfide
- Manganese
- Nitrite
- Sulfide

The NSWC Crane Environmental Protection Department must approve any deviations from this procedure.

2.0 REQUIRED FIELD FORMS AND EQUIPMENT

Field Chemical Analytical Log Form: A copy of the Field Chemical Analytical Log Form can be found in Attachment 1 of this SOP.

Field analytical test kits, methods, and reagents: The following table presents the required analytical test kits to be used for field analysis. Specific reagents and bottle requirements are included in each procedure. Current copies of the procedures will be maintained on-site during the field program. They will be accessible during use of the Field Test Kits.

Parameter	Make	Model	Method Number	Equipment/ Method Chemistry
Alkalinity	CHEMetrics	K-9810 K-9815 K-9820	ASTM D 1067-92	CHEMets vacuum vials/HCL Titrant w/pH indicator
Carbon Dioxide	CHEMetrics	K-1910 K-1920 K-1925	ASTM D 513-82	CHEMets vacuum vials/Rhodazine D and Indigo Carmine Sodium Hydroxide w/pH indicator
Dissolved Oxygen	CHEMetrics	K-7501 K-7512	ASTM D 5543-94	CHEMets vacuum vials/Rhodazine D and Indigo Carmine
Ferrous Iron	HACH	DR-850	HACH 8146	Colorimeter / 1,10 Phenanthrolein
Hydrogen Sulfide	HACH	HS-C	HACH Proprietary/ Mod. SM 426C	Color Chart/ Effervescence through Sulfide reactive paper
Manganese	HACH	DR-850	HACH 8304	Colorimeter / Cadmium Reduction
Nitrite	HACH	DR-850	HACH 8507 Mod EPA 354.1	Colorimeter / Diazotization
Sulfide	HACH	DR-850	HACH 8131 EPA 376.2	Colorimeter / Methylene Blue

3.0 FIELD ANALYTICAL PROCEDURES

3.1 General

The procedures for each of the individual analyses will be maintained in the field during the entire sampling program. The procedures give a detailed explanation on how to perform each particular method, and include information on sampling/storage, accuracy checks, interference, reagents, and apparatus.

3.2 Quality Assurance/Quality Control Procedures

Accuracy checks shall be performed to check the performance of the reagents, the apparatus, and the analytical procedure. These accuracy checks include standard solutions, field duplicates, and reagent blank correction. The field test kit procedures detail how to perform each of the accuracy checks for each parameter.

Prior to analysis, the expiration dates of reagents will be checked. If the reagents have exceeded their shelf life, the reagents will be replaced. If deviations from the applicable analytical procedure are identified, the deviations will be corrected and the associated samples re-analyzed. If no problems are

identified with the reagents, apparatus, or procedures, interference may be present. Associated data will be qualified as estimated in the 'notes' section on the sample logsheet. Field duplicate results will be evaluated for relative percent difference (RPD). If the RPD exceeds 30 percent, the associated data will be qualified as estimated.

The following table describes the type and frequency of accuracy checks required for each parameter.

Parameter	Standard Solution	Field Duplicate	Reagent Blank Correction
Alkalinity	None	1 per 10	None
Carbon Dioxide	None	1 per 10	None
Dissolved Oxygen	None	1 per 10	None
Ferrous Iron	None	1 per 10	None
Hydrogen Sulfide	None	1 per 10	None
Manganese	None	1 per 10	None
Nitrite	1 per round	1 per 10	1 per lot
Sulfide	None	1 per 10	None

3.3 Sample Handling and Storage

Each of the field parameters requires slightly different sampling procedures and storage limitations. In order to compile these procedures and limitations into one location for reference in the field, the following table has been prepared that presents parameter-specific requirements for sampling and storage.

Parameter	Handling	Storage
Alkalinity	Avoid agitation and exposure to air	May hold for 1 hr. at 4°C with zero headspace; warm to room temperature before analysis.
Carbon Dioxide	Avoid agitation and exposure to air	May hold for 24 hr. at 4°C with zero headspace; warm to room temperature before analysis.
Dissolved Oxygen	Avoid agitation and exposure to air	Analyze immediately.
Hydrogen Sulfide	Avoid agitation and exposure to air	Analyze immediately.
Ferrous Iron	Avoid agitation and exposure to air; filter if visibly turbid	Analyze immediately; keep out of sunlight.
Manganese	Avoid agitation and exposure to air; filter if visibly turbid	Analyze immediately.

Parameter	Handling	Storage
Nitrite	Utilize standard sampling techniques	May hold for 24 hr. at 4°C; warm to room temperature before analysis.
Sulfide	Avoid agitation and exposure to air	Analyze immediately.

4.0 ATTACHMENTS

1 Field Analytical Log Sheet Geochemical Parameters

ATTACHMENT 1

FIELD ANALYTICAL LOG SHEET GEOCHEMICAL PARAMETERS

Note: Analyte, method, and/or equipment may be deleted from form if not being performed.

FIELD ANALYTICAL LOG SHEET
GEOCHEMICAL PARAMETERS

Tetra Tech NUS, Inc.

Page __ of __

Project Site Name: _____
Project No.: _____
Sampled By: _____
Field Analyst: _____
Field Form Checked as per QA/QC Checklist (initials): _____

Sample ID No.: _____
Sample Location: _____
Duplicate: ☐
Blank: ☐

SAMPLING DATA:

	Color (Visual)	pH (S.U.)	S.C. (mS/cm)	Temp. (°C)	Turbidity (NTU)	DO (mg/l)	Salinity (%)	ORP (Eh) (+/- mv)
Date: / Time:								
Method:								

SAMPLE COLLECTION/ANALYSIS INFORMATION:

ORP (Eh) (+/- mv)

Electrode Make & Model: _____

Reference Electrode (circle one): Silver-Silver Chloride / Calomel / Hydrogen

Dissolved Oxygen:

Equipment: Chemetrics Test Kit

Concentration: _____ ppm

Analysis Time: _____

Range Used:	Range	Method	Concentration ppm
☐	0 to 1 ppm	K-7510	
☐	1 to 12 ppm	K-7512	

Equipment: HACH Digital Titrator OX-DT

Analysis Time: _____

Range Used:	Range	Sample Vol.	Cartridge	Multiplier
☐	1-5 mg/L	200 ml	0.200 N	0.01
☐	2-10 mg/L	100 ml	0.200 N	0.02

Titration Count	Multiplier		Concentration
_____	x 0.01	=	mg/L
_____	x 0.02	=	mg/L

Notes:

Carbon Dioxide:

Equipment: Chemetrics Test Kit

Concentration: _____ ppm

Analysis Time: _____

Range Used:	Range	Method	Concentration ppm
☐	10 to 100 ppm	K-1910	
☐	100 to 1000 ppm	K-1920	
☐	250 to 2500 ppm	K-1925	

Equipment: HACH Digital Titrator CA-DT

Range Used:	Range	Sample Vol.	Cartridge	Multiplier
☐	10-50 mg/L	200 ml	0.3636 N	0.1
☐	20-100 mg/L	100 ml	0.3636 N	0.2
☐	100-400 mg/L	200 ml	3.636 N	1.0
☐	200-1000 mg/L	100 ml	3.636 N	2.0

Titration Count			Concentration
_____	x 0.1	=	mg/L
_____	x 0.2	=	mg/L
_____	x 1.0	=	mg/L
_____	x 2.0	=	mg/L

Standard Additions: ☐ Titrant Molarity: _____ Digits Required: 1st.: _____ 2nd.: _____ 3rd.: _____

Notes:

Hydrogen, dissolved

Equipment: Bubble strip sampling field method

Start stripper at _____ (time)

End stripper at _____ (time)

Total stripper time _____

Pump rate _____ milliliters/minute

ATTACHMENT 1 (Continued)

FIELD ANALYTICAL LOG SHEET GEOCHEMICAL PARAMETERS

Note: Analyte, method, and/or equipment may be deleted from form if not being performed.

FIELD ANALYTICAL LOG SHEET
GEOCHEMICAL PARAMETERS

Tetra Tech NUS, Inc. Page __ of __

Project Site Name: _____ Sample ID No.: _____
Project No.: _____ Sample Location: _____
Sampled By: _____ Duplicate: ☐
Field Analyst: _____ Blank: ☐

Alkalinity:

Equipment: Chemetrics Test Kit Concentration: _____ ppm

Range Used:	Range	Method	Concentration ppm
☐	10 to 100 ppm	K-9810	
☐	50 to 500 ppm	K-9815	
☐	100 to 1000 ppm	K-9820	

Analysis Time: _____

Filtered: ☐

Equipment: HACH Digital Titrator AL-DT

Range Used:	Range	Sample Vol.	Cartridge	Multiplier	Titration Count	Multiplier	Concentration
☐	10-40 mg/L	100 ml	0.1600 N	0.1	_____ & _____	x 0.1 =	mg/L
☐	40-160 mg/L	25 ml	0.1600 N	0.4	_____ & _____	x 0.4 =	mg/L
☐	100-400 mg/L	100 ml	1.600 N	1.0	_____ & _____	x 1.0 =	mg/L
☐	200-800 mg/L	50 ml	1.600 N	2.0	_____ & _____	x 2.0 =	mg/L
☐	500-2000 mg/L	20 ml	1.600 N	5.0	_____ & _____	x 5.0 =	mg/L
☐	1000-4000 mg/L	10 ml	1.600 N	10.0	_____ & _____	x 10.0 =	mg/L

Parameter:	Hydroxide	Carbonate	Bicarbonate
Relationship:			

Standard Additions: ☐ Titrant Molarity: _____ Digits Required: 1st.: _____ 2nd.: _____ 3rd.: _____

Notes:

Ferrous Iron (Fe^{2+}):

Equipment: DR-850 DR-8 __ Range: 0 - 3.00 mg/L Concentration: _____ ppm
Program/Module: 500nm 33
Analysis Time: _____
Equipment: IR-18C Color Wheel Range: 0 - 10 mg/L
Notes:
Filtered: ☐

Hydrogen Sulfide (H_2S): Range: 0 - 5 mg/L

Equipment: HS-C Other: _____ Concentration: _____ ppm
Exceeded 5.0 mg/L range on color chart: ☐ Analysis Time: _____

Notes:

Sulfide (S^{2-}):

Equipment: Chemetrics Test Kit Range: 0 - 10 mg/L Concentration: _____ ppm

Range Used:	Range	Method	Concentration ppm
☐	0 to 1 ppm	K-9510	
☐	1 to 10 ppm	K-9510	

Analysis Time: _____

Filtered: ☐

Equipment: DR-850 DR-8 __ Range: 0 - 0.70 mg/L
Program/Module: 610nm 93

Notes:

ATTACHMENT 1 (Continued)

FIELD ANALYTICAL LOG SHEET GEOCHEMICAL PARAMETERS

Note: Analyte, method, and/or equipment may be deleted from form if not being performed.

Tetra Tech NUS, Inc.

FIELD ANALYTICAL LOG SHEET
GEOCHEMICAL PARAMETERS

Page __ of __

Project Site Name: _____ Sample ID No.: _____
Project No.: _____ Sample Location: _____
Sampled By: _____ Duplicate: ☐
Field Analyst: Blank: ☐

Sulfate (SO_4^{2-}):
Equipment: DR-850 DR-8 __ Range: 0 - 70 mg/L Concentration: _____ ppm
Program/Module: _____ 91 Analysis Time: _____
Standard Solution: ☐ Results: _____ Filtered: ☐
Standard Additions: ☐ Digits Required: 0.1ml:_____ 0.2ml:_____ 0.3ml:_____
Notes:

Nitrate (NO_3^--N):
Equipment: DR-850 DR-8 __ Range: 0 - 0.50 mg/L (1) Concentration: _____ ppm
Program/Module: 55 Analysis Time: _____ Filtered: ☐
Standard Solution: ☐ Results: _____ Nitrite Interference Treatment: ☐ Reagent Blank Correction: ☐
Standard Additions: ☐ Digits Required: 0.1ml:_____ 0.2ml:_____ 0.3ml:_____
Alternate forms: NO_2 _____ $NaNO_2$ _____ mg/L

Notes (1): If results are over limit use dilution method at step 3, 5ml sample 10ml DI result X3, range upto 1.5mg/L

Notes:

Nitrite (NO_2^--N): Concentration: _____ ppm
Equipment: DR-850 DR-8 __ Range: 0 - 0.350 mg/L Analysis Time: _____ Filtered: ☐
Program/Module: 62
Standard Solution: ☐ Results: _____ Reagent Blank Correction: ☐
Notes:

Manganese (Mn^{2+}): Concentration: _____ ppm
Equipment: DR-850 DR-8 __ Range: 0 - 20.0 mg/L Analysis Time: _____ Filtered: ☐
Program/Module: 525nm 41
Standard Solution: ☐ Results: _____ Digestion: ☐ Reagent Blank Correction: ☐
Standard Additions: ☐ Digits Required: 0.1ml:_____ 0.2ml:_____ 0.3ml:_____

Equipment: HACH MN-5 Range: 0 - 3 mg/L
Notes:

QA/QC Checklist:
All data fields have been completed as necessary: ☐
Correct measurement units are cited in the SAMPLING DATA block: ☐
Values cited in the SAMPLING DATA block are consistent with the Groundwater Sample Log Sheet: ☐
Mulitplication is correct for each *Multiplier* table: ☐
Final calulated concentration is within the appropriate *Range Used* block: ☐
Alkalinity *Relationship* is determined appropriatly as per manufacturer (HACH) instructions: ☐
QA/QC sample (e.g., Std. Additions, etc.) frequency is appropriate as per the project planning documents: ☐
Nitrite interference treatment was used for Nitrate test if Nitrite was detected: ☐
Title block on each page of form is initialized by person who performed this QA/QC Checklist: ☐

STANDARD OPERATING PROCEDURE
NUMBER CTO166-23

BLADDER PUMP INSTALLATION AND REMOVAL

1.0 PURPOSE

The purpose of this Standard Operating Procedure (SOP) is to establish procedures for installation of low-flow bladder pumps into monitoring wells. This SOP also establishes the procedure for the removal of these pumps from wells when necessary for well or pump maintenance and reinsertion of the pump into the well.

The NSWC Crane Environmental Protection Department must approve any deviations from this procedure.

2.0 REQUIRED FIELD FORMS AND EQUIPMENT

The following field forms and equipment are required for low-flow pump installation and removal.

Bound Field Logbook

Plastic sheeting

Surgical gloves

Well key

Teflon®-lined PVC bladder pump: Well Wizard® Pump model P1150, constructed of polyvinyl chloride (PVC) and Teflon®, manufactured by QED Environmental Systems or equivalent. The pump dimensions are 1.66 inches in diameter and 19.5 inches in length, with a pump volume of 0.130 liters.

Teflon®-lined polyethylene tubing

Sample-line freeze protector

Sample discharge adapter

2-inch well cap assembly

3.0 PUMP INSTALLATION PROCEDURES

3.1 Obtain information on the total depth of the well, static water level, depth of the screened interval, and the length of the screen.

3.2 Calculate the length of Teflon®-lined tubing necessary to position the pump within the screened interval of the monitoring well (the pump supplier will assist with this task).

3.3 Order the Teflon®-lined bladder pump from the manufacturer with Teflon®-lined tubing factory cut to length and attached to both the pump and well cap. Specify the required tubing length. Also specify that the pump must be tested for United States Environmental Protection Agency (U.S. EPA) priority pollutant parameters.

3.4 When the pump assembly (pump, attached tubing, and well cap) is received from the manufacturer, remove the pump from the protective shipping bag. Examine the pump assembly. Examine all fittings and connections for tightness. Check the threaded PVC screen to insure that it is snug.

3.5 Each pump will be accompanied by a certification from the manufacturer. Record on the certification the identification of the well in which the pump is to be installed. Record in the Field Logbook the manufacturer's name, date of manufacturer's certification, pump model, batch serial number, and identification of the well in which the pump was installed.

3.6 Place the pump assembly into the shipping bag or lay the pump on clean plastic next to the monitoring well into which the pump assembly is to be installed. Wear clean, disposable surgical gloves while handling the pump assembly.

3.7 Unlock the well.

3.8 Insert the pump into the 2-inch PVC riser pipe of the well. While holding the tubing, slowly lower the pump, taking care not to kink the pump tubing. When the tubing is inserted to its complete

length, suspend the pump and tubing assembly on the top of the riser pipe using the attached well cap assembly. Wear clean, disposable surgical gloves while handling the pump assembly.

3.9 Replace the outer protective cap and lock the well.

4.0 PUMP REMOVAL AND REPLACEMENT PROCEDURES

4.1 Spread approximately ten square feet of clean plastic sheeting next to the well.

4.2 Unlock and open the well.

4.3 Pulling on the well cap assembly, slowly remove the pump and tubing from the well. As the tubing is being removed from the well, coil the tubing into a manageable size. When the tubing, pump, and cap have been removed from the well, secure the coil of tubing using string or plastic wire ties and lay it on the plastic sheeting. Wear clean, disposable surgical gloves while handling the pump assembly.

4.4 If the pump is to be removed from the site and later reinserted into the well, attach a label to the pump. On the label record the identification of the well from which the pump was removed. Place the pump and tubing into a plastic bag and also label the outside of the bag. Wear clean, disposable surgical gloves while handling the pump assembly.

4.5 If the pump is removed for more than a short time (e.g. a few hours) and will not be removed from the location of the monitoring well, place the pump, tubing, and cap into a clean plastic bag until the pump is reinstalled.

4.5 Reinsertion of the pump is accomplished by following steps 3.7 and 3.8.

4.6 Record activities in the bound Field Log Book.

STANDARD OPERATING PROCEDURE
NUMBER CTO166-24

PLANT TISSUE SAMPLING

1.0 PURPOSE

This Standard Operating Procedure (SOP) describes the procedures to be used for the collection of plant tissue samples during field activities at the NSWC Crane facility.

2.0 REQUIRED FIELD FORMS AND EQUIPMENT

Aluminum Foil
Chain-of-custody (COC) records
Camera
Cooler
Conventional freezer (for freezing samples) – May be able to use dry ice
Disposable medical-grade gloves (i.e., latex, nitrile)
Dry Ice
Hand pruner
100 ft measuring tape
Paper towels
Plastic sheeting for a clean work surface
Razor knife
Required personal protective equipment (PPE), including work clothes for handling dry ice
Sample labels and tags
Sample log sheets
Scale to weigh approximately 20 to 50 grams of vegetation
Sealable polyethylene bags (i.e., one gallon Ziploc bags)
Stainless steel bowl to rinse vegetation
Stainless steel tongs
Survey flagging: Used to mark sampling locations after completion of sampling.
Telescopic tree pruner
Writing utensil with indelible ink

3.0 COLLECTION OF PLANT TISSUE

Only above-ground portions of plants will be collected. Vegetation from different species should be kept separate. A photograph (or several if necessary) should be taken of each species collected to show distinguishing characteristics that may be necessary for species identification as described in Section 3.5 below.

3.1 Collection of Plant Tissue from Non-Woody Shrubs and Small Sedges

The following procedure should be followed when collecting plant tissue from shrubs and small sedges (non-woody plants).

1. Place clean plastic sheeting next to the plant that will be sampled. Use this area as the work space for Steps 2 though 11.

2. Place the scale on the plastic sheet.

3. Place a piece of aluminum foil on the scale and tare the foil to obtain a

4. 0 gram starting weight.

5. Clip the aboveground portions (shoots) of selected plant species with a small hand pruner about 1 inch above soil surface. Care should be taken to prevent the shoots from coming into contact with the soil.

6. Place the tissue on the aluminum foil on the scale and weigh the sample.

7. If 50 grams of tissue has been collected, go to Step 8.

8. If less than 50 grams of tissue has been collected, collect additional plants from this location. The plants should be the same species as those already collected from that location. Repeat Steps 5 and 6.

9. Once 50 grams of tissue has been collected, pour 2,500 mL of DI water into a clean stainless steel bowl. Dunk the plants in the water using a clean pair of stainless steel tongs and swirl them around to rinse the soil/dust off of the plants.

10. Remove the plants from the water with the tongs and blot them dry with clean paper towels. Discard the rinse water on the ground unless a rinsate sample will be collected. The biota rinsate is the water left over from this procedure (this is not the same as the rinsate blank). If a rinsate sample will be collected and analyzed, see Section 3.6.

11. Place the dried plants into a one-gallon resealable plastic bag using the clean tongs and seal the bag shut.

12. Complete all required information on the sample labels (see SOP CTO166-01) and secure the sample label to the resealable plastic bag.

13. Immediately place the samples in a cooler with dry ice to freeze the plants or place the sample in a cooler with wet ice and take the sample back to the freezer at the trailer within 2 hours.

14. Record the required information on the Plant Tissue Sample Log Sheet and the COC Record form (see SOP CTO166-03).

3.2 Collection of Plant Tissue from Woody Shrubs

The following procedure should be followed when collecting plant tissue from woody shrubs with leaves.

1. Place clean plastic sheeting next to the plant that will be sampled. Use this area as the work space for Steps 2 though 11.

2. Place the scale on the plastic sheet.

3. Place a piece of aluminum foil on the scale and tare the foil to obtain a

4. 0 gram starting weight.

5. Pick the leaves of selected plant species by hand using clean gloves.

6. Place the leaves on the aluminum foil on the scale and weigh the sample.

7. If 50 grams of tissue has been collected, go to Step 8.

8. If less than 50 grams of tissue has been collected, collect additional plants from this location. The plants should be the same species as those already collected from that location. Repeat Steps 5 and 6.

9. Once 50 grams of tissue has been collected, pour 2,500 mL of DI water into a clean stainless steel bowl. Dunk the leaves in the water using a clean pair of stainless steel tongs and swirl them around to rinse the soil/dust off of the leaves.

10. Remove the leaves from the water with the tongs and blot them dry with clean paper towels. Discard the rinse water on the ground unless a rinsate sample will be collected. The biota rinsate is the water left over from this procedure (this is not the same as the rinsate blank). If a rinsate sample will be collected and analyzed, see Section 3.6.

11. Place the dried leaves into a one-gallon resealable plastic bag using the clean tongs and seal the bag.

12. Complete all required information on the sample labels (see SOP CTO166-01) and secure the sample label to the resealable plastic bag.

13. Immediately place the samples in a cooler with dry ice to freeze the leaves or place the sample in a cooler with wet ice and take the sample back to the freezer at the trailer within 2 hours.

14. Record the required information on the Plant Tissue Sample Log Sheet and the COC Record form (see SOP CTO166-03).

3.3 Collection of Plant Tissue from Trees

The following procedure should be followed when collecting plant tissue from trees.

1. Find a tree of the appropriate species with a diameter at breast height (DBH) of at least 10 inches (if available).

2. Measure and record the diameter of the tree approximately 4.5 feet from the ground using a tape measure.

3. Measure the diameter of the crown at the widest point and again 90 degrees to the diameter at the widest point using the 200 ft measuring tape. Record both measurements on field log sheets.

4. Before collecting samples for chemical analysis, collect some average size leaves using a telescopic tree pruner to remove low-lying branches, if necessary. Weigh the leaves to get an idea of how many leaves will need to be collected for each sample. This step will not need to be repeated at other locations if similar sized leaves will be collected.

5. Place clean plastic sheeting next to the tree that will be sampled. Use this area as the work space for Steps 6 though 17.

6. If the leaves can be reached by hand, remove the leaves using clean gloves and place them on the clean plastic sheeting to be used as the work space. Go to Step 8.

7. If the leaves cannot be reached by hand, place a separate plastic sheet under the branch that will be sampled. Remove branches with leaves using a telescopic tree pruner and have the branch fall onto the clean plastic; do not collect leaves from the ground. Place the tree branches on the other plastic sheet that will be used as the work space.

8. After adequate numbers of leaves are collected (based on the approximate number required from Step 4) Place the scale on the plastic sheet.

9. Place a piece of aluminum foil on the scale and tare the foil to obtain a'0 gram starting weight.

10. Pick the leaves from the branches by hand using clean gloves.

11. Place the leaves on the aluminum foil on the scale and weigh the sample.

12. If 50 grams of tissue has been collected, go to Step 8.

13. If less than 50 grams of tissue has been collected, collect additional branches from this location from the same tree. Repeat Steps 9 through 11.

14. Once 50 grams of tissue has been collected, pour 2,500 mL of DI water into a clean stainless steel bowl. Dunk the leaves in the water using a clean pair of stainless steel tongs and swirl them around to rinse the soil/dust off of the leaves.

15. Remove the leaves from the water with the tongs and blot them dry with clean paper towels. Discard the rinse water on the ground unless a rinsate sample will be collected. The biota rinsate is the water left over from this procedure (this is not the same as the rinsate blank). If a rinsate sample will be collected and analyzed, see Section 3.6.

16. Place the dried leaves into a one-gallon resealable plastic bag using the clean tongs and seal the bag.

17. Complete all required information on the sample labels (see SOP CTO166-01) and secure the sample label to the resealable plastic bag.

18. Immediately place the samples in a cooler with dry ice to freeze the leaves or place the sample in a cooler with wet ice and take the sample back to the freezer at the trailer within 2 hours.

19. Record the required information on the Plant Tissue Sample Log Sheet and the COC Record form (see SOP CTO166-03).

3.4 Collection of Acorns

The following procedure should be followed when collecting acorns.

1. Find a tree with acorns on the branches at heights that can be reached with the telescopic tree pruner.

2. Measure and record the diameter of the tree approximately 4.5 feet from the ground using a tape measure.

3. Measure the diameter of the crown at the widest point and again 90 degrees to the diameter at the widest point using the 200 ft measuring tape. Record both measurements on field log sheets.

4. Before collecting samples for chemical analysis, collect 10 acorns using a telescopic tree pruner (if necessary) to remove low-lying branches. Open acorns and weigh the inside portion to determine how many acorns are needed to obtain 50 grams of sample. Discard those acorns.

5. Place clean plastic sheeting next to the tree that will be sampled. Use this area as the work space for Steps 6 though 17.

6. Place a separate plastic sheet under the branch that will be sampled. Use a telescopic tree pruner (if necessary) to remove low-lying branches that contain acorns and have the branch fall onto the clean plastic; do not collect acorns from the ground. Place the tree branches on the other plastic sheet that will be used as the work space.

7. After adequate numbers of acorns are collected (based on the approximate number required from Step 4) pour 2,500 mL of DI water into a clean stainless steel bowl. Pick the acorns from the branches and place them into a plastic bag. Discard any acorns with broken shells.

8. Place the whole acorn into the water and swirl them around to rinse the soil/dust off of the acorns. Do not open the acorns.

9. Remove the acorns from the water with the tongs and blot them dry with clean paper towels. Discard the rinse water on the ground; no biota rinsates for chemical analysis will be collected for the acorns.

10. Place the acorns into a clean one-gallon resealable plastic bag using the clean tongs and seal the bag.

11. Complete all required information on the sample labels (see SOP CTO166-01) and secure the sample label to the resealable plastic bag.

12. Immediately place the samples in a cooler with dry ice to freeze the acorns or place the sample in a cooler with wet ice and take the sample back to the freezer at the trailer within 2 hours.

13. Record the required information on the Plant Tissue Sample Log Sheet and the COC Record form (see SOP CTO166-03).

3.5 Documentation of Plant Species

An attempt will be made to have a forester from the Base identify the plant species that are collected for analysis. If that is not possible, the following procedure will be used to document the plant identification.

1. Photograph the plants from a distance, and then photograph a close up of the bark, branches, and other distinguishing features.

2. Cut off the representative portions of the plant (or similar plant to the one that was collected), including leaves, small branches, seeds, etc. (or the entire plant if it is small) and place them in a one gallon resealable bag. The representative pieces may vary on the species so contact Peyton Doub (a TtNUS field biologist) at the number listed below to determine which pieces he would need based on a description given to him over the telephone.

3. Complete all required information on the sample labels (see SOP CTO166-01) and secure the sample label to the resealable plastic bag.

4. Immediately place the samples in a cooler with wet ice until shipment.

5. Send the plant pieces to Peyton Doub, via overnight express, at the address listed below. The samples do not need to be refrigerated during shipment.

Peyton Doub
Tetra Tech NUS, Inc.
20251 Century Blvd. Suite 200
Germantown, MD 20874
(301) 528-3089

3.6 Collection of Rinsate Sample

As presented in Sections 3.1 through 3.3, the vegetation will be rinsed in a stainless steel bowl using distilled water. A maximum of three rinsate samples will be collected for chemical analysis as part of this investigation to determine if explosives on the outside of the plant were rinsed off into the rinsate water. The three samples will consist of the following:

- Water used to rinse residue from a shrub (Section 3.1)
- Water used to rinse residue from a leaf from a shrub (Section 3.2)
- Water used to rinse residue from a leaf from a tree (Section 3.3)

The following procedures will be used to collect the rinsate water:

1. Obtain a stainless steel bowl with a spout on it or create a spout on an existing stainless steel bowl using a hammer or pair of pliers. Use this bowl for collecting the rinsates for chemical analysis.

2. After the rinsate is collected as described in Sections 3.1 through 3.3, pour the rinsate into the appropriate sample bottles.

3. Two 1,000 mL bottles need to be filled so an extra 500 mL of water was used for the rinsate to account for spillage.

3.7 Packaging and Shipping of Samples

Samples will be packaged on dry ice for shipping to the testing laboratory. Dry ice is shipped as a hazardous material and therefore must follow the below listed requirements:

1. A Dry Ice placard must be placed on the outside of the shipping container.

2. Clear plastic tape must completely cover the placard to make it weather resistant.

3. Line item 6 on the FedEx air bill must be completed as follows:

   - Check the box indicting shipment contains dangerous goods (shipper's declaration not required)
   - Check box indicating Dry Ice and list number of packages and weight of Dry Ice in kilograms. Note: 2 lbs. = 1 Kg.

4. Also suggested that shipping container have some type of vent to release pressure due to sublimation (changing from solid to gas).

When packing items in the shipping container put the Dry Ice and the product as close together as possible with the dry ice on top. Fill any empty space with wadded newspaper or Styrofoam peanuts as any "dead-air space" will cause the Dry Ice to sublimate faster. Note: 5-10 pounds of Dry Ice in a 15 quart container will keep everything frozen for 24 hours.. For larger shipping containers and greater shipping times multiply Dry Ice quantities by this rate.

4.0 ATTACHMENTS

1. Plant Tissue Sample Log Sheet

ATTACHMENT 1

PLANT TISSUE SAMPLE LOG SHEET

Tetra Tech NUS, Inc. **PLANT TISSUE SAMPLE LOG SHEET**

Page___ of ___

Project Site Name: _____
Project No.: _____

[] Shrub
[] Leaf
[] Acorn
[] Other: _____
[] QA Sample Type: _____

Sample ID No.: _____
Sample Location: _____
Sampled By: _____
C.O.C. No.: _____

Type of Sample:
[] Low Concentration
[] High Concentration

SAMPLING DATA:

	Crown Diameter	DBH (inches)	Height (feet)	Seeps Observed Y	Seeps Observed N
Date:					
Time:					
Species:					
Method:					

SAMPLE COLLECTION INFORMATION:

Analysis	Preservative	Container Requirements	Collected

Site Description (surrounding vegetation, soil moisture, percent understory, stressed vegetation):	MAP (Attach photos of vegetation and surrounding areas):

Circle if Applicable:

MS/MSD	Duplicate ID No.:

Signature(s):

APPENDIX D

BORING LOGS AND MONITORING WELL CONSTRUCTION DIAGRAMS

D.1

SWMU 13 ROUND 1

Tetra Tech NUS, Inc.

BORING LOG

PROJECT NAME: NSWC CRANE
PROJECT NUMBER: N9060 CTO 0279
DRILLING COMPANY: BOWSER MORNER
DRILLING RIG: ROTOSONIC

BORING NUMBER: 13MWT01
DATE: 3/30/03
GEOLOGIST: BOB BALKOVEC
DRILLER: DAVE S.

Sample No. and Type or RQD	Depth (Ft.) or Run No.	Blows / 6" or RQD (%)	Sample Recovery / Sample Length	Lithology Change (Depth /Ft.) or Screened Interval	MATERIAL DESCRIPTION: Soil Density/ Consistency or Rock Hardness	Color	Material Classification	USCS *	Remarks	PID/FID Reading (ppm): Sample	Sampler BZ	Borehole**	Driller BZ**
	1					BR	2" TOP SOIL	ML	5" 0-6"	0.0			
	2					↓	↓	↓		↓			
	3				DRY	YELL	2-6' CLAYEY SILT						
	4					OR							
1125	5		4.9' / 5'			LT. GRAY	↓			↓		0.0	0.0
	6					YELLOW & LT. GRAY	CLAYEY SILT	↓		0.0			
	7				MOIST	BR	6'-9.5' SILTY SAND	SM	WEATHERED S.S.	↓			
	8				↓	YELL OR	↓	↓	↓				
	9					↓							
1145	10		4.6' / 5'		HARD DRY	↓	.5' SANDSTONE	BR	ROCK @ 9.5'	↓			
	11					LT GRAY	WL @ 6' BGS						
	12						5" REAM TO 15'						
R-1	13						SANDY MATERIAL						
	14					↓	IN CUTTINGS						
	15					OR LT GRAY	SILTY MATERIAL	↓					
				T.D. 15'			WELL SET @ 15' 2" PVC						
							SCREENED 5'-15'						
							SAND TO 3'						
							BENT TO 1'						

* When rock coring, enter rock brokeness.

** Include monitor reading in 6 foot intervals @ borehole. Increase reading frequency if elevated reponse read.

Remarks:

Drilling Area Background (ppm): 0.0

Converted to Well: Yes X No

Well I.D. #: 13MWT01

Tetra Tech NUS, Inc.

BEDROCK MONITORING WELL SHEET

WELL No.: 13MW101

PERMIT No: —

PROJECT:	NSWC CRANE	DRILLING Co.:	BOWSER MORNER	BORING No.:	13MW101
PROJECT No.:	9060 CTO 0279	DRILLER:	DAVE S	DATE COMPLETED:	3/30/03
SITE:	SWMU 13	DRILLING METHOD:	ROTOSONIC	NORTHING:	1310541.574
GEOLOGIST:	B. BALKOVEC	DEV. METHOD:	WHALE PUMP	EASTING:	3025015.943

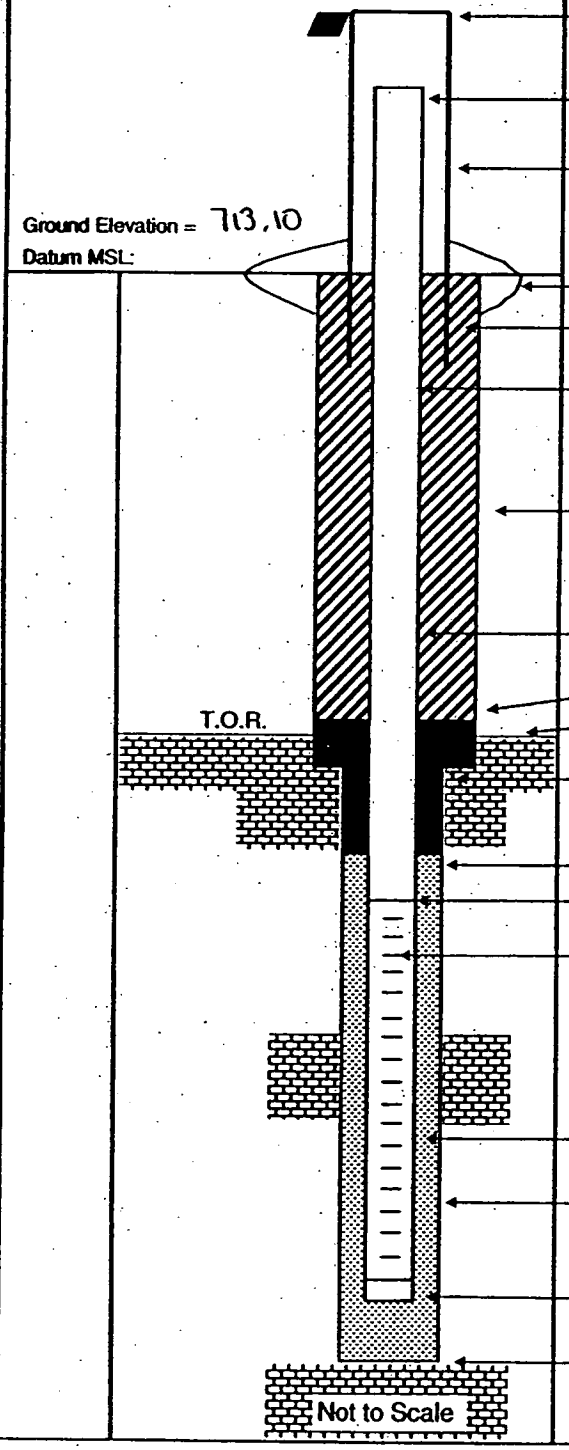

Elevation of Top of Casing: 715.94

Stick Up of Casing Above Ground Surface: 2.24'

Elevation of Top of Riser: 715.34

I.D. of Surface Casing: 4" SQUARE

Type of Surface Casing: STEEL

Type of Surface Seal: 4'x4'x6" PAD

I.D. of Permanent Casing: NA

I.D. of Riser: 2"

Type of Riser: PVC

Borehole Diameter: 5"

Type of Backfill: GROUT

Elevation / Depth Top of Seal: 712.1 / 1'

Elevation / Depth Top of Bedrock: 702.6 / 9.5'

Type of Seal: BENT CHIPS

Elevation / Depth of Top of Filter Pack: 710.1 / 3'

Elevation / Depth of Top of Screen: 709.1 / 5'

Type of Screen: PVC

Slot Size x Length: .20 x 10'

I.D. of Screen: 2"

Type of Filter Pack: No. 20-40 SAND

Diameter of Hole in Bedrock: Core / Ream: 5"

Elevation / Depth of Bottom of Screen: 698.10 / 15'

Elevation / Total Depth of Borehole: 698.10 / 15'

Tetra Tech NUS, Inc.

BORING LOG

PROJECT NAME: NSWC CRANE
PROJECT NUMBER: N9060 CTO 0279
DRILLING COMPANY: BOWSER MORNER
DRILLING RIG: Roto Sonic

BORING NUMBER: 13MWT02
DATE: 3/27/03
GEOLOGIST: BOB BALKOVEC
DRILLER: DAVE S.

Sample No. and Type or RQD	Depth (Ft.) or Run No.	Blows / 6" or RQD (%)	Sample Recovery / Sample Length	Lithology Change (Depth /Ft.) or Screened Interval	MATERIAL DESCRIPTION: Soil Density/ Consistency or Rock Hardness	Color	Material Classification	USCS *	Remarks	PID/FID Reading (ppm): Sample	Sample BZ	Borehole	Borehole BZ
	1					BR	TOP 5' TOP SOIL	ML	6" TO 7'	0.0			
	2						5-5' SANDY SILT W/ SS		FILL				
	3						FRAGS						
	4					YELL BR	5'-5' CLAYEY SILT		MOTTLED				
S-1 1030	5		4.7 / 5'			LT. GRAY						0.0	0.0
	6				DRY +		5'-7' SILT W/ SOME	ML		0.0			
S-2 1035	7		2' / 2'		STIFF		CLAY		REFUSAL @ 7'				
	8				HARD +	GRAY	7'-10' SILT STONE		THIN LAM.				
	9		70% RQD		DRY	& BR							
C-1	10		@1130			GRAY			ROCK @ 7'				
	11				SOFT +				POSS H2O @ 11'				
	12		5' / 5'		MOIST								
	13				SOFT	GRAY	SHALE 12-13.5'						
	14		60% RQD				SILTSTONE 13.5'-15.5'		THIN LAM.				
C-2	15		@1149	COAL			COAL SEAM (14'-14.3')						
	16				HARD		SANDSTONE 15.5'	BR					
	17		4.9' / 5'						@ 17' WL=16.7' BLS				
	18								AFTER 2 HRS.				
	19		62% RQD						FRACT 17'-18'				
C-3	20		@1437						STAINING @ 19.5'				
	21								FRACT 19.5'-20'				
	22		5' / 5'						FRACT 22'-23.5'				
	23						22'-23.5' SANDSTONE	BR					
	24												
C-4	25		@1452		SOFT	DK GRAY	INTERBEDDED SHALE SS	BR	POSS WATER ZONE				

* When rock coring, enter rock brokeness.

** Include monitor reading in 6 foot intervals @ borehole. Increase reading frequency if elevated reponse read.

Remarks:

Drilling Area Background (ppm): 0.0

Converted to Well: Yes X No _____ Well I.D. #: 13MWT02

Tetra Tech NUS, Inc.

BORING LOG

PROJECT NAME: NSWC CRANE
PROJECT NUMBER: N9060 CTO 0279
DRILLING COMPANY: BOWSER MORNER
DRILLING RIG: Roto Sonic

BORING NUMBER: 13MW02
DATE: 3/23/03
GEOLOGIST: BOB BALKOVEC
DRILLER: DAVE S.

Sample No. and Type or RQD	Depth (Ft.) or Run No.	Blows / .6" or RQD (%)	Sample Recovery / Sample Length	Lithology Change (Depth /Ft.) or Screened Interval	MATERIAL DESCRIPTION: Soil Density/ Consistency or Rock Hardness	Color	Material Classification	USCS *	Remarks	PID/FID Reading (ppm): Sample	Sample/BZ	Borehole*	Drill/BZ*
C4	26		50%		SOFT	DK	INTERBEDDED	BRR		0.0	0.0		
↓	27		RQD		↓	GRY	SHALE + S.S	↓		↓	↓		
				T.D. 27'									
							WELL SET @ 27' 2" PVC						
							SCREENED 17'-27'						
							SAND TO 15'						
							BENT TO 13'						
							VOL. CLAY TO 4'						

* When rock coring, enter rock brokeness.

** Include monitor reading in 6 foot intervals @ borehole. Increase reading frequency if elevated reponse read.

Remarks:

Drilling Area Background (ppm): 0.0

Converted to Well: Yes x No ____ Well I.D. #: 13MW02

Tetra Tech NUS, Inc.

BEDROCK MONITORING WELL SHEET

WELL No.: 13MW102

PERMIT No:

PROJECT:	NSWC CRANE	DRILLING Co.:	BOWSER MORNER	BORING No.:	13MW102
PROJECT No.:	9060 CTO 0279	DRILLER:	DAVE S.	DATE COMPLETED:	3/29/03
SITE:	SWMU 13	DRILLING METHOD:	ROTOSONIC	NORTHING:	1310776.555
GEOLOGIST:	B. BALKOVEC	DEV. METHOD:	BAILER S.STEEL	EASTING:	3024743.547

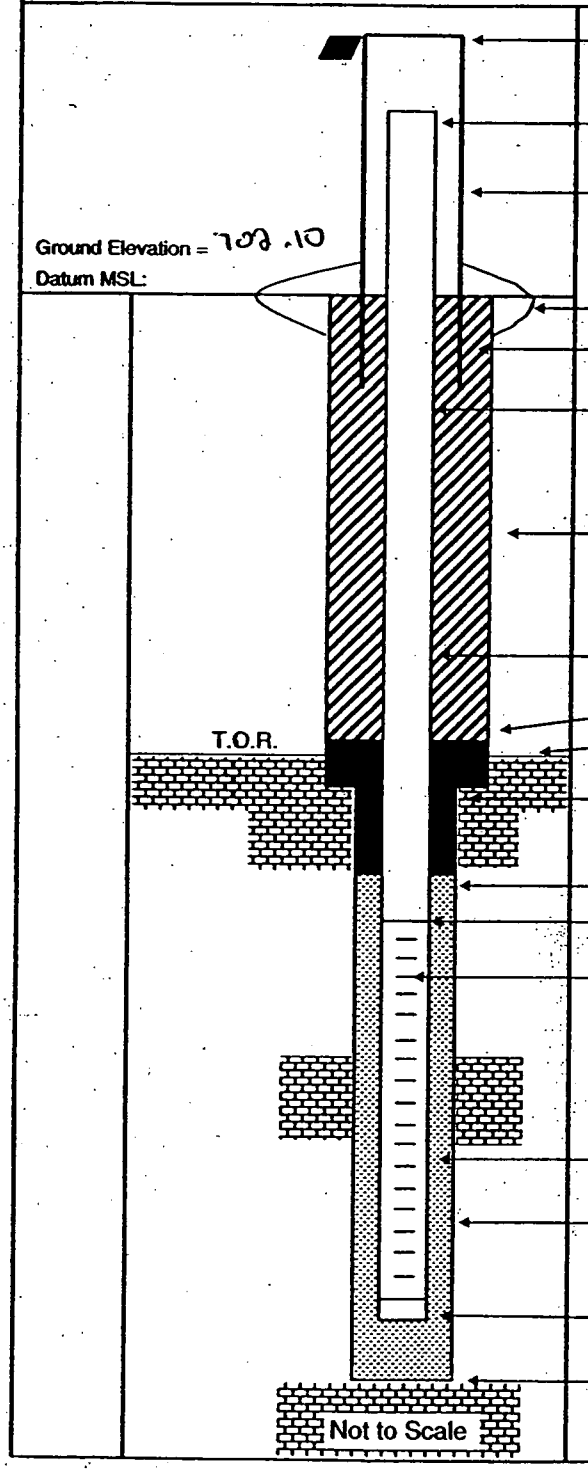

Elevation of Top of Casing: 705.28

Stick Up of Casing Above Ground Surface: 2.62'

Elevation of Top of Riser: 704.72

I.D. of Surface Casing: 4" SQUARE

Type of Surface Casing: ~~[illegible]~~ STEEL

Type of Surface Seal: 4'x4'x6" PAD

I.D. of Permanent Casing: NA

I.D. of Riser: 2"

Type of Riser: PVC

Borehole Diameter: 5" (7'-9') 6" (0-7')

Type of Backfill: VOL CLAY TO 4'

Elevation / Depth Top of Seal: 689.1 / 13'

Elevation / Depth Top of Bedrock: 695.1 / 7.0'

Type of Seal: BENT CHIPS

Elevation / Depth of Top of Filter Pack: 687.1 / 15'

Elevation / Depth of Top of Screen: 685.1 / 17'

Type of Screen: PVC

Slot Size x Length: .20 x 10'

I.D. of Screen: 2"

Type of Filter Pack: No. 20-40 SAND

Diameter of Hole in Bedrock: Core / Ream: 5"

Elevation / Depth of Bottom of Screen: 675.1 / 27'

Elevation / Total Depth of Borehole: 675.1 / 27'

Tetra Tech NUS, Inc.

BORING LOG

PROJECT NAME: NSWC CRANE
PROJECT NUMBER: N9060 CTO 0279
DRILLING COMPANY: BOWSER MORNER
DRILLING RIG: ROTOSONIC

BORING NUMBER: BMWTU3
DATE: 3/30/03
GEOLOGIST: BOB BALKOVEC
DRILLER: DAVE S.

Sample No. and Type or RQD	Depth (Ft.) or Run No.	Blows / 6" or RQD (%)	Sample Recovery / Sample Length	Lithology Change (Depth /Ft.) or Screened Interval	MATERIAL DESCRIPTION: Soil Density/ Consistency or Rock Hardness	Color	Material Classification	USCS *	Remarks	PID/FID Reading (ppm): Sample	Sampler BZ	Borehole**	Driller BZ**
	1						SEE BMWTU1 FOR LITHOLOGY		5" 0-15'				
						YELLOW	SILTY MATERIAL						
1515	5												
							SANDY MATERIAL						
1520	10								HARDER @ 10'				
							SANDY MATERIAL						
						GRAY	COLOR CHANGE @ 13'						
1530	15						SILTY MATERIAL						
				T.D. 15'			WELL SET @ 15' 2" PVC						
							SCREENED 5'-15'						
							SAND TO 3'						
							BENT TO 1'						

* When rock coring, enter rock brokeness.

** Include monitor reading in 6 foot intervals @ borehole. Increase reading frequency if elevated reponse read.

Remarks:

Drilling Area Background (ppm): —

Converted to Well: Yes X No

Well I.D. #: BMWTU3

Tetra Tech NUS, Inc.

BEDROCK MONITORING WELL SHEET

WELL No.: 13MWT03

PERMIT No.:

PROJECT:	NSWC CRANE	DRILLING Co.:	BOWSER MORNER	BORING No.:	13MWT03
PROJECT No.:	9060 CTO 0279	DRILLER:	DAVE S.	DATE COMPLETED:	3/30/03
SITE:	SWMU 13	DRILLING METHOD:	ROTOSONIC	NORTHING:	1310240.946
GEOLOGIST:	B. BALKOVEC	DEV. METHOD:	WHALE PUMP	EASTING:	3024891.661

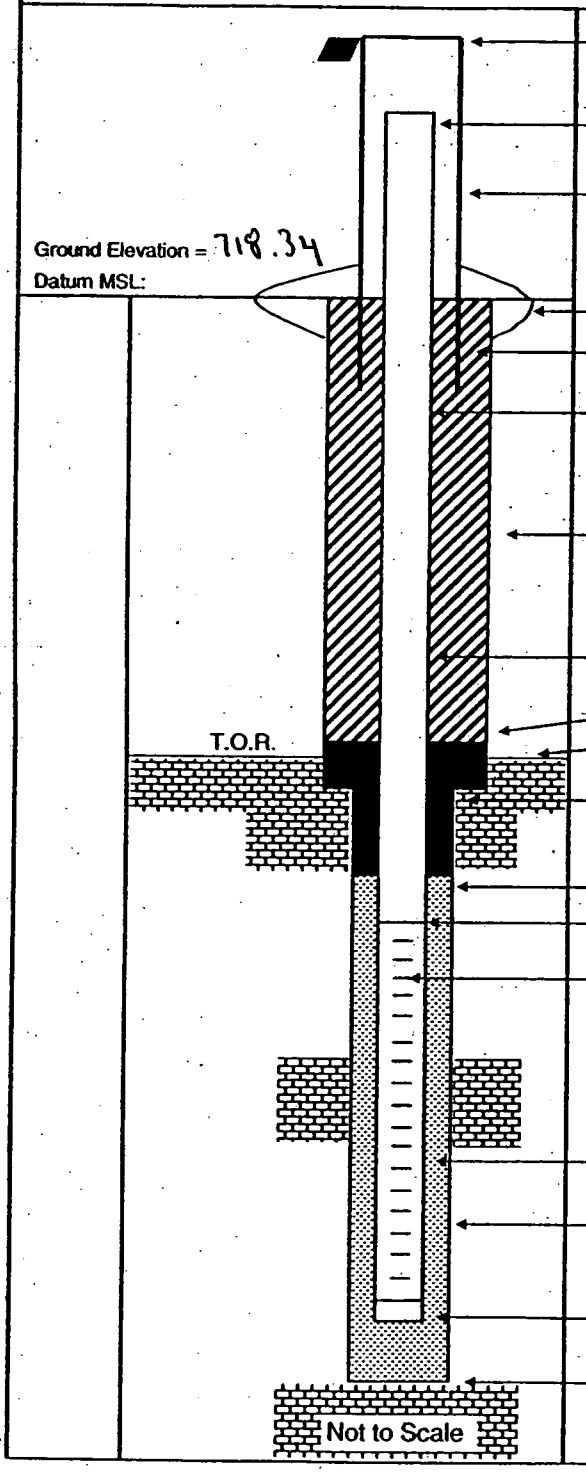

Elevation of Top of Casing:	721.60
Stick Up of Casing Above Ground Surface:	2.86'
Elevation of Top of Riser:	721.10
I.D. of Surface Casing:	4" SQUARE
Type of Surface Casing:	STEEL
Type of Surface Seal:	4'x4'x6" PAD
I.D. of Permanent Casing:	NA
I.D. of Riser:	2"
Type of Riser:	PVC
Borehole Diameter:	5"
Type of Backfill:	GROUT
Elevation / Depth Top of Seal:	717.34 / 1'
Elevation / Depth Top of Bedrock:	709.34 / 10'
Type of Seal:	BENT. CHIPS
Elevation / Depth of Top of Filter Pack:	715.34 / 3'
Elevation / Depth of Top of Screen:	713.34 / 5'
Type of Screen:	PVC
Slot Size x Length:	10' x .20
I.D. of Screen:	2"
Type of Filter Pack:	No. 20-40 SAND
Diameter of Hole in Bedrock: Core / Ream:	5"
Elevation / Depth of Bottom of Screen:	703.34 / 15'
Elevation / Total Depth of Borehole:	703.34 / 15'

Tetra Tech NUS, Inc.

BORING LOG

PROJECT NAME: NSWC CRANE
PROJECT NUMBER: N9060 CTO 0279
DRILLING COMPANY: BOWSER MORNER
DRILLING RIG: ROTOSONIC

BORING NUMBER: 13MW104
DATE: 3/30/03
GEOLOGIST: BOB BALKOVEC
DRILLER: DAVE S.

Sample No. and Type or RQD	Depth (Ft.) or Run No.	Blows / 6" or RQD (%)	Sample Recovery / Sample Length	Lithology Change (Depth /Ft.) or Screened Interval	Soil Density/ Consistency or Rock Hardness	Color	Material Classification	USCS*	Remarks	PID/FID Reading (ppm) Sample	Sampler BZ	Borehole**	Driller BZ**
	1				MOIST + SOFT	BR	.4' TOP SOIL	ML		0.0			
	2				MOIST	YELL OR	.4'-7.5' CLAYEY SILT						
	3				M. STIFF	LT.	(MOTTLED)						
	4					GRAY							
S-1 0434	5		5' / 5'										
	6				MOIST		CLAYEY SILT SOME			0.0			
	7			▼?	M. STIFF		SOLUTION CAVITIES						
S-2 0438	8		3' / 3'		HARD + DRY	BR + GRAY	SANDY SILTSTONE		REFUSAL @ 8'				
	9						SILTY MATERIAL IN		6" TO 5'				
	10						CAVITIES		5" 5'-15'				
	11						5" REAM						
	12												
	13												
	14												
	15												
				TD. 15'			SET WELL @ 15' 2" PVC						
							SCREENED 5'-15'						
							SAND TO 4'						
							BENT CHIPS TO 2'						

* When rock coring, enter rock brokeness.

** Include monitor reading in 6 foot intervals @ borehole. Increase reading frequency if elevated reponse read.

Remarks: 6" TO 5' 5" 5'-15'

Drilling Area Background (ppm): 0.0

Converted to Well: Yes X No ____ Well I.D. #: 13MW104

Tetra Tech NUS, Inc.

BEDROCK
MONITORING WELL SHEET

WELL No.: BMW T04

PERMIT No: —

PROJECT:	NSWC CRANE	DRILLING Co.:	BOWSER MORNER	BORING No.:	BMW T04
PROJECT No.:	9060 CTO 0279	DRILLER:	DAVE S	DATE COMPLETED:	3/30/03
SITE:	SWMU 13	DRILLING METHOD:	ROTOSONIC	NORTHING:	1310383.396
GEOLOGIST:	B. BALKOVEC	DEV. METHOD:	WHALE PUMP	EASTING:	302454.6.113

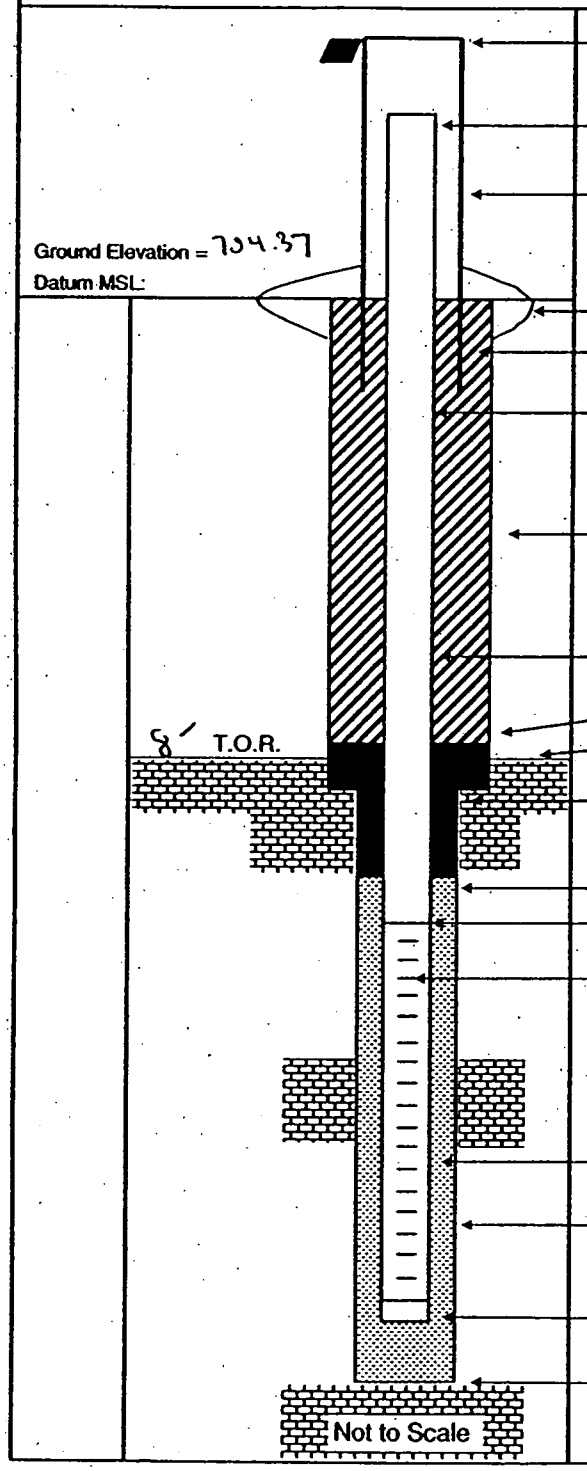

Elevation of Top of Casing: 707.32

Stick Up of Casing Above Ground Surface: 2.47'

Elevation of Top of Riser: 706.84

I.D. of Surface Casing: 4" SQUARE

Type of Surface Casing: STEEL

Type of Surface Seal: 4'x4'x6" PAD

I.D. of Permanent Casing: NA

I.D. of Riser: 2"

Type of Riser: PVC

Borehole Diameter: 5"

Type of Backfill: CEMENT

Elevation / Depth Top of Seal: 700.37 / 2'

Elevation / Depth Top of Bedrock: 696.37 / 8'

Type of Seal: BENT CHIPS

Elevation / Depth of Top of Filter Pack: 700.37 / 4'

Elevation / Depth of Top of Screen: 694.37 / 5'

Type of Screen: PVC

Slot Size x Length: .20 x 10'

I.D. of Screen: 2"

Type of Filter Pack: No. 20-40 SAND

Diameter of Hole in Bedrock:
Core / Ream: 5"

Elevation / Depth of Bottom of Screen: 684.37 / 15'

Elevation / Total Depth of Borehole: 684.37 / 15'

Tetra Tech NUS, Inc.

BORING LOG

PROJECT NAME: NSWC CRANE
PROJECT NUMBER: N9060 CTO 0279
DRILLING COMPANY: BOWSER MORNER
DRILLING RIG: ROTOSONIC

BORING NUMBER: BMW705
DATE: 3/29/03
GEOLOGIST: BOB BALKOVEC
DRILLER: DAVES

Sample No. and Type or RQD	Depth (Ft.) or Run No.	Blows / 6" or RQD (%)	Sample Recovery / Sample Length	Lithology Change (Depth /Ft.) or Screened Interval	MATERIAL DESCRIPTION: Soil Density/ Consistency or Rock Hardness	Color	Material Classification	USCS*	Remarks	PID/FID Reading (ppm): Sample	Sample/BZ	Borehole**	Driller/BZ**
	1					BR	SEE BORING LOG BMW707						
						↓	FOR LITHOLOGY						
						GY							
						GRAY	5" REAM TO 6'						
0920	5					↓	SILTY MATERIAL						
						YELL	SILT + CLAY						
						GR	MATERIAL						
						↓	↓						
	10					GRAY	SILTY MATERIAL		HARDER @ 9'				
						↓	↓						
	15												
0928	16					↓	↓						
				TD 16'			SET WELL @ 16' 2" PVC						
							SCREENED 6'-16'						
							SAND TO 4'						
							BENT CHIPS TO 2'						

* When rock coring, enter rock brokeness.

** Include monitor reading in 6 foot intervals @ borehole. Increase reading frequency if elevated reponse read.

Remarks:

Drilling Area Background (ppm): —

Converted to Well: Yes X No ____ Well I.D. #: BMW705

Tetra Tech NUS, Inc.

BEDROCK MONITORING WELL SHEET

WELL No.: 13MW105

PERMIT No:

PROJECT:	NSWC CRANE	DRILLING Co.:	BOWSER-MORNER	BORING No.:	13MW105
PROJECT No.:	9060 CTO 0279	DRILLER:	DAVE S.	DATE COMPLETED:	3/29/03
SITE:	SWMU 13	DRILLING METHOD:	ROTOSONIC	NORTHING:	1360758.427
GEOLOGIST:	B. BALKOVEC	DEV. METHOD:	Whale Pump	EASTING:	3024380.025

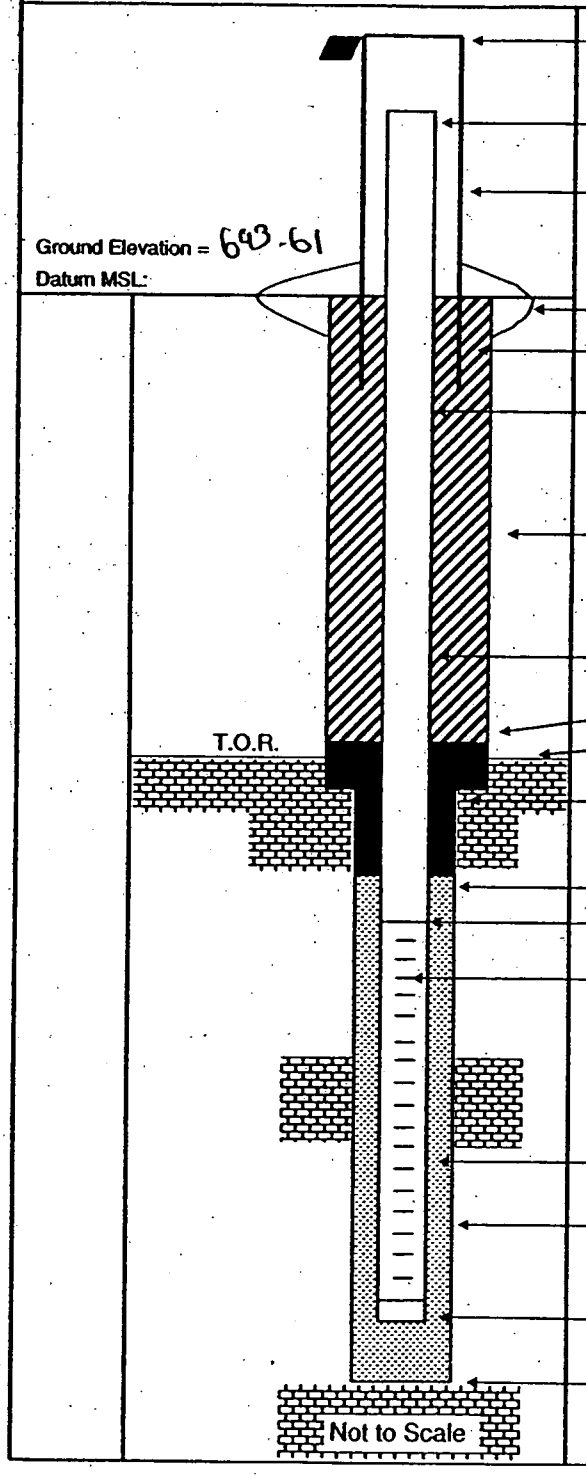

Elevation of Top of Casing:	697.12
Stick Up of Casing Above Ground Surface:	2.83'
Elevation of Top of Riser:	696.44
I.D. of Surface Casing:	4" SQUARE
Type of Surface Casing:	STEEL
Type of Surface Seal:	4' x 4' x 6" PAD
I.D. of Permanent Casing:	NA
I.D. of Riser:	2"
Type of Riser:	PVC
Borehole Diameter:	5"
Type of Backfill:	GROUT
Elevation / Depth Top of Seal:	691.61 / 2'
Elevation / Depth Top of Bedrock:	684.61 / 9'
Type of Seal:	BENT CHIPS
Elevation / Depth of Top of Filter Pack:	689.61 / 4'
Elevation / Depth of Top of Screen:	687.61 / 6'
Type of Screen:	PVC
Slot Size x Length:	.20 x 10'
I.D. of Screen:	2"
Type of Filter Pack:	No. 20-40 SAND
Diameter of Hole in Bedrock: Core / Ream:	5'
Elevation / Depth of Bottom of Screen:	677.61 / 16'
Elevation / Total Depth of Borehole:	677.61 / 16'

Tetra Tech NUS, Inc.

BORING LOG

PROJECT NAME: NSWC CRANE
PROJECT NUMBER: N9060 CTO 0279
DRILLING COMPANY: BOWSER MORNER
DRILLING RIG: ROTOSONIC

BORING NUMBER: 13MW T06
DATE: 4/1/03
GEOLOGIST: BOB BALKOVEC
DRILLER: DAVE S

Sample No. and Type or RQD	Depth (FL) or Run No.	Blows / 6" or RQD (%)	Sample Recovery / Sample Length	Lithology Change (Depth /FL) or Screened Interval	MATERIAL DESCRIPTION: Soil Density/ Consistency or Rock Hardness	Color	Material Classification	USCS*	Remarks	PID/FID Reading (ppm): Sample	Sampler BZ	Borehole**	Driller BZ**
	1				MOIST & SOFT	BR	.5' TOP SOIL	ML		0.0			
	2				MOIST &	BR &	.5'-4' CLAYEY SILT		MOTTLED				
	3				M. STIFF	LT GRAY							
S-1 1205	4		4" / 4"										
	5						CLAYEY SILT 4-7'	ML		0.0			
	6												
	7			?			SANDY 6.5'-7'		POSS. SAT @ 6.5'				
	8				DRY &	LT	7'-15' SILTSTONE						
S-2 1110	9		4.9' / 5'		SOFT	GRAY							
	10				SOFT &	BRN	SILTSTONE W/ SAND			0.0			
	11				MOIST	LT GRAY	SAND (FINE)						
	12				HARD &	LT	SILTSTONE						
	13				DRY	GRAY							
	14					LT GRAY							
S-3 1229	15		5.5' / 6'		V. HARD & DRY	PURPLE							
				15' TD			WELL SET @ 15' 2" PVC						
							SCREENED 5'-15'						
							SAND TO 3'						
							BENT TO 1'						

* When rock coring, enter rock brokeness.

** Include monitor reading in 6 foot intervals @ borehole. Increase reading frequency if elevated reponse read.

Remarks: 5' 0-15'

Drilling Area Background (ppm): 0.0

Converted to Well: Yes X No ____ Well I.D. #: 13MW T06

Tetra Tech NUS, Inc.

BEDROCK MONITORING WELL SHEET

WELL No.: BMW706

PERMIT No:

PROJECT:	NSWC CRANE	DRILLING Co.:	BOWSER MORNER	BORING No.:	BMW706
PROJECT No.:	9060 CTO 0279	DRILLER:	DAVE S.	DATE COMPLETED:	4/7/03
SITE:	SWMU 13	DRILLING METHOD:	ROTOSONIC	NORTHING:	1304916.177
GEOLOGIST:	B. BALKOVEC	DEV. METHOD:	WHALE PUMP	EASTING:	3024445.270

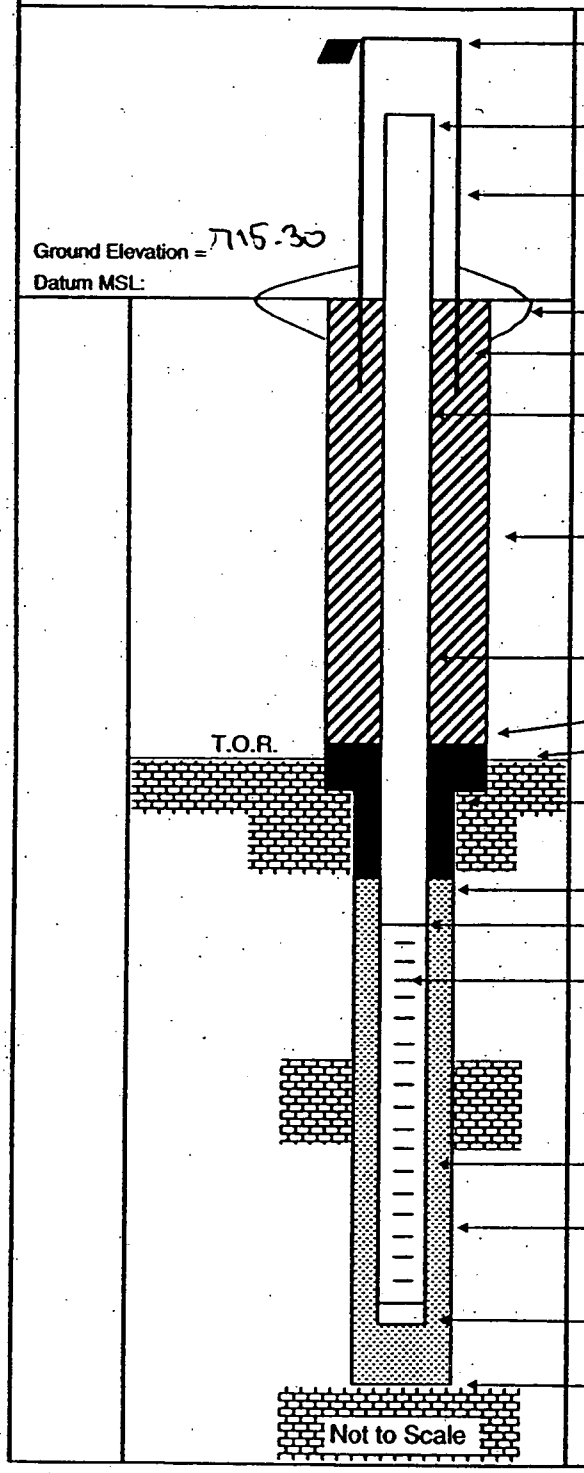

Elevation of Top of Casing: 718.47

Stick Up of Casing Above Ground Surface: 2.63'

Elevation of Top of Riser: 717.93

I.D. of Surface Casing: 4" SQUARE

Type of Surface Casing: STEEL

Type of Surface Seal: 4'x4'x6" PAD

I.D. of Permanent Casing: NA

I.D. of Riser: 2"

Type of Riser: PVC

Borehole Diameter: 5"

Type of Backfill: GROUT

Elevation / Depth Top of Seal: 714.3 / 1'

Elevation / Depth Top of Bedrock: 708.3 / 7.0

Type of Seal: BENT CHIPS

Elevation / Depth of Top of Filter Pack: 712.3 / 3'

Elevation / Depth of Top of Screen: 710.3 / 5'

Type of Screen: PVC

Slot Size x Length: .20 x 10'

I.D. of Screen: 2"

Type of Filter Pack: No. 20-40 SAND

Diameter of Hole in Bedrock: Core / Ream: 5"

Elevation / Depth of Bottom of Screen: 700.3 / 15'

Elevation / Total Depth of Borehole: 700.3 / 15'

Tetra Tech NUS, Inc.

BORING LOG

PROJECT NAME: NSWC CRANE
PROJECT NUMBER: N9060 CTO 0279
DRILLING COMPANY: BOWSER MORNER
DRILLING RIG: ROTOSONIC
BORING NUMBER: 13MWT07
DATE: 3/29/03
GEOLOGIST: BOB BALKOVEC
DRILLER: DAVE S.

Sample No. and Type or RQD	Depth (Ft.) or Run No.	Blows / 6" or RQD (%)	Sample Recovery / Sample Length	Lithology Change (Depth /Ft.) or Screened Interval	Soil Density/ Consistency or Rock Hardness	Color	Material Classification	USCS*	Remarks	PID/FID Reading (ppm) Sample	Sample BZ	Borehole**	Driller BZ**
	1				MUSTY	BR	TOP 1' TOP SOIL	ML	4"-0.5'	0.0			
	2				M-STIFF	YELL BR	1'-3' SANDY SILT		WELL SET 6"-3.5'				
	3					LT BROWN	(MOTTLED)		CLAY 5'-				
	4				DRY	LT	3'-5' SILTSTONE		WEATHERED 3'-4'				
4 0807	5		4.5'/5'		SOFT	GRAY	ROCK @ 4' (INCOMPETENT)	PK					
	6				MUSTY	YELL BR	5'-7' SANDY SILT W/ SOME	ML	MOTTLED	0.0			
	7				M-STIFF	GRAY	CLAY						
	8		70%		SOFT & WET	BR	7.5'-9' SILTY CLAY	CL					
	9		RQD		DRY &	LT	SILTSTONE W/ SAND	BR	ROCK @ 9.5'				
4	10		8.5/4.5		SOFT	GRAY							
	11									0.0			
	12				DRY & HARD	YELL BR	11.5'-13' SANDSTONE						
	13				MUSTY &	LT & DK	SILTSTONE						
	14				SOFT	GRAY							
	15		9.5'/4'										
				T.D. 15'			SET WELL @ 15' 2" PVC						
							SCREENED 5'-15'						
							SAND TO 4'						
							BENTONITE TO 2'						

* When rock coring, enter rock brokeness.

** Include monitor reading in 6 foot intervals @ borehole. Increase reading frequency if elevated reponse read.

Remarks:

Drilling Area Background (ppm): 0.0

Converted to Well: Yes X No

Well I.D. #: 13MWT07

Tetra Tech NUS, Inc.

BEDROCK MONITORING WELL SHEET

WELL No.: 13MW707

PERMIT No:

PROJECT:	NSWC CRANE	DRILLING Co.:	BOWSER MORNER	BORING No.:	13MW707
PROJECT No.:	9060 CTO 0279	DRILLER:	DAVE S.	DATE COMPLETED:	3/24/03
SITE:	SWMU 13	DRILLING METHOD:	ROTOSONIC	NORTHING:	1310594.322
GEOLOGIST:	B. BALKOVEC	DEV. METHOD:	Waterra Pump	EASTING:	3024094.128

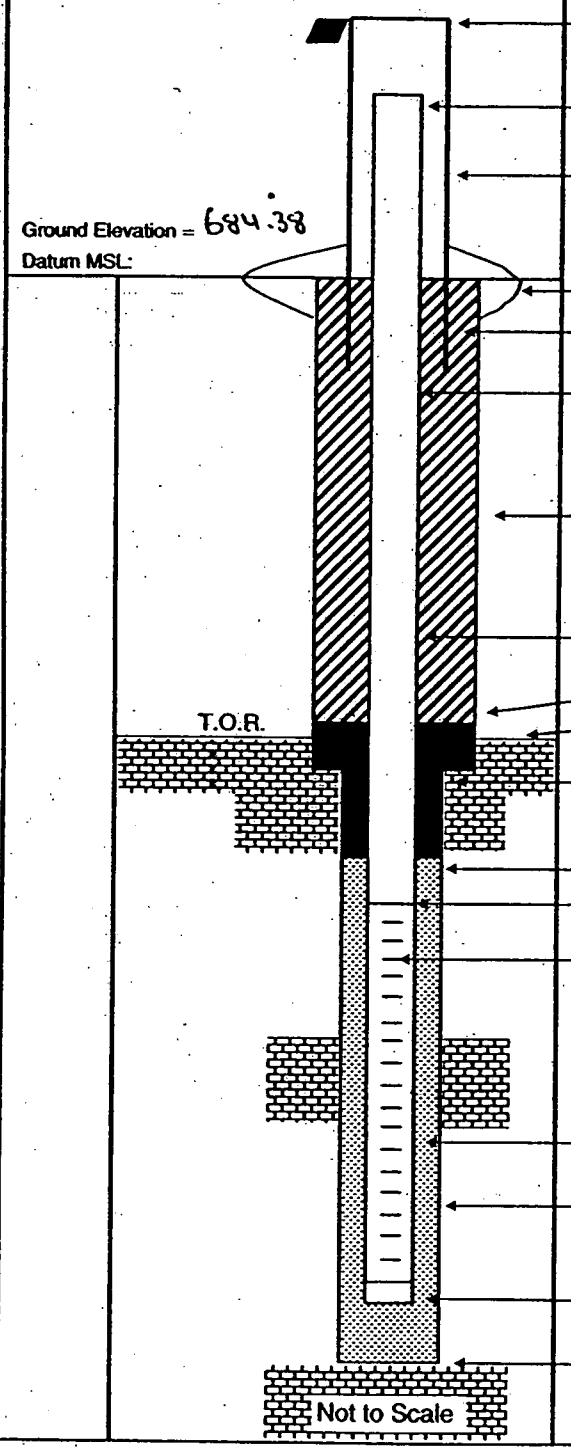

Elevation of Top of Casing: 687.20

Stick Up of Casing Above Ground Surface: 2.84

Elevation of Top of Riser: 687.22

I.D. of Surface Casing: 4" SQUARE

Type of Surface Casing: STEEL

Type of Surface Seal: 4'x4'x6" PAD

I.D. of Permanent Casing: NA

I.D. of Riser: 2"

Type of Riser: PVC

Borehole Diameter: 5"

Type of Backfill: GROUT

Elevation / Depth Top of Seal: 682.38 / 2'

Elevation / Depth Top of Bedrock: 676.88 / 8.5'

Type of Seal: BENT CHIPS

Elevation / Depth of Top of Filter Pack: 680.38 / 4'

Elevation / Depth of Top of Screen: 679.38 / 5'

Type of Screen: PVC

Slot Size x Length: .20 x 10'

I.D. of Screen: 2"

Type of Filter Pack: No. 20-40 SAND

Diameter of Hole in Bedrock:
Core / Ream: 5"

Elevation / Depth of Bottom of Screen: 669.38 / 15'

Elevation / Total Depth of Borehole: 669.38 / 15'

Tetra Tech NUS, Inc.

BORING LOG

PROJECT NAME: NSWC CRANE
PROJECT NUMBER: N9060 CTO 0279
DRILLING COMPANY: BOWSER MORNER
DRILLING RIG: ROTOSONIC

BORING NUMBER: BMW108 / SB08
DATE: 3/31/03
GEOLOGIST: BOB BALKOVEC
DRILLER: DAVE S.

Sample No. and Type or RQD	Depth (Ft.) or Run No.	Blows / 6" or RQD (%)	Sample Recovery / Sample Length	Lithology Change (Depth /Ft.) or Screened Interval	MATERIAL DESCRIPTION: Soil Density/ Consistency or Rock Hardness	Color	Material Classification	USCS*	Remarks	PID/FID Reading (ppm): Sample	Sample BZ	Borehole**	Driller BZ**
	1				MOIST SOFT	BR	TOP .5' TOP SOIL	ML		0.0			
	2				DRY	YELL BR	CLAYEY SILT		0-2 @ 0745				
	3				M STIFF	GRAY	(MOTTLED)		DUP F0033003-04				
	4												
5-1 DRY	5		4.5' / 5'										
	6					BR	5-6.5' CLAYEY SILT W/ S.S. FRAGS	ML		0.0			
	7					YELL BR	6.5-8' CLAYEY SILT		6.5' @ 0800				
	8						(MOTTLED)		MYMSD				
	9				SOFT	LT GRAY	8-10' SILTSTONE	MX	POSS. WATER @ 8'				
5-2 DRY	10		4.5' / 5'		DRY			BR					
	11				HARD	YELL BR	SANDSTONE 10-10.5'			0.0			
	12				HARD	LT GRAY	10.5'-13.5' SILTSTONE						
	13				DRY	YELL BR	(MOTTLED)		MOISTURE ALONG				
	14				HARD	LT/DK	THIN LAMINATED SILTSTONE		SIDE WALLS				
5-3 DRY	15		5' / 5'		DRY	GRAY	13.5-15'		6"-10.5' 5" REAM				
				TD 15'			WELL SET @ 15'		5'-15'				
							SCREENED 5'-15'		DRILLER WASHED				
							SAND TO 4'		WATER				
							BENT TO 2'		WL @ 9.0' BGS				
									AFTER BLOWOUT				

* When rock coring, enter rock brokeness.

** Include monitor reading in 6 foot intervals @ borehole. Increase reading frequency if elevated reponse read.

Remarks:

Drilling Area Background (ppm): 0.0

Converted to Well: Yes X No

Well I.D. #: BMW108

Tetra Tech NUS, Inc.

BEDROCK
MONITORING WELL SHEET

WELL No.: BMW13B

PERMIT No:

PROJECT:	NSWC CRANE	DRILLING Co.:	BOWSER MORNER	BORING No.:	BMW13B/SB08
PROJECT No.:	9060 CTO 0279	DRILLER:	DAVES	DATE COMPLETED:	3/30/03
SITE:	SWMU 13	DRILLING METHOD:	ROTOSONIC	NORTHING:	1310247.860
GEOLOGIST:	B. BALKOVEC	DEV. METHOD:	WHALE PUMP	EASTING:	3024337.560

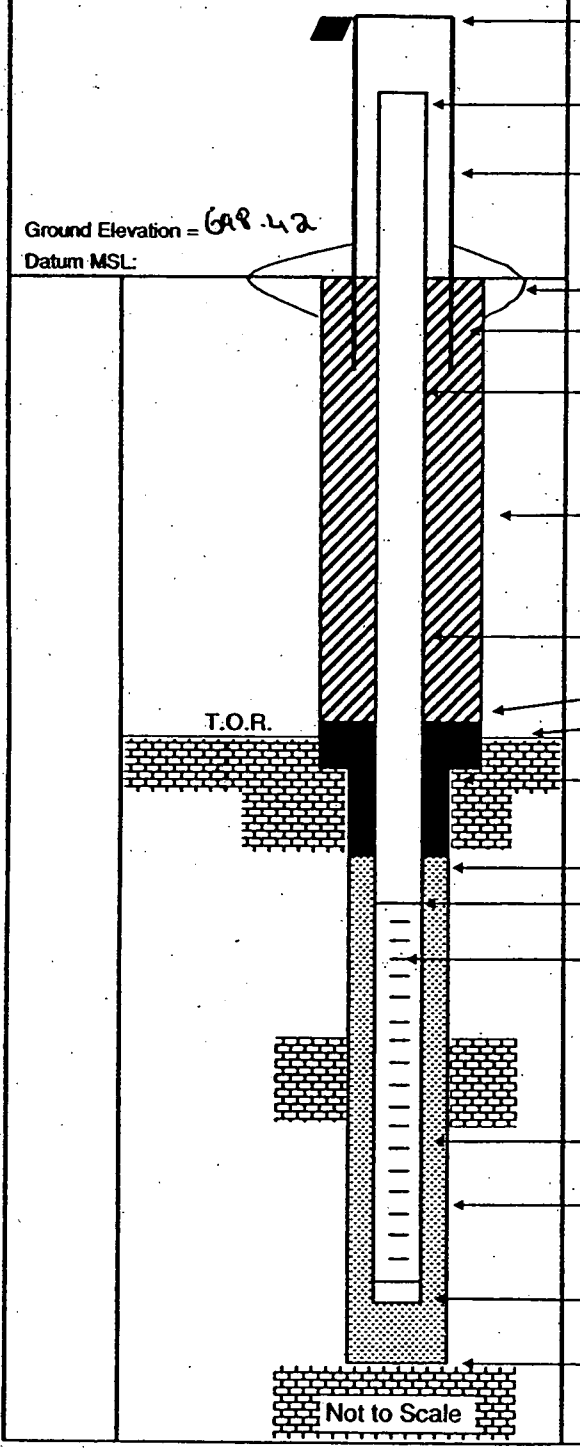

Elevation of Top of Casing: 701.11

Stick Up of Casing Above Ground Surface: 2.14

Elevation of Top of Riser: 700.56

I.D. of Surface Casing: 4" SQUARE

Type of Surface Casing: STEEL

Type of Surface Seal: 4'x4'x6" PAD

I.D. of Permanent Casing: NA

I.D. of Riser: 2"

Type of Riser: PVC

Borehole Diameter: 6" (0-5') 5" (5'-15')

Type of Backfill: GROUT

Elevation / Depth Top of Seal: 696.42 / 2'

Elevation / Depth Top of Bedrock: 690.42 / 8'

Type of Seal: BENTONITE

Elevation / Depth of Top of Filter Pack: 694.42 / 4'

Elevation / Depth of Top of Screen: 693.42 / 5'

Type of Screen: PVC

Slot Size x Length: .20 x 10'

I.D. of Screen: 2"

Type of Filter Pack: No. 20-40 SAND

Diameter of Hole in Bedrock:
Core / Ream: 5"

Elevation / Depth of Bottom of Screen: 683.42 / 15'

Elevation / Total Depth of Borehole: 683.42 / 15'

Tetra Tech NUS, Inc.

BORING LOG

PROJECT NAME: NSWC CRANE
PROJECT NUMBER: N9060 CTO 0279
DRILLING COMPANY: BOWSER MORNER
DRILLING RIG: ROTOSONIC

BORING NUMBER: 13MW109
DATE: 4/1/03
GEOLOGIST: BOB BALKOVEC
DRILLER: DAVES.

Sample No. and Type or RQD	Depth (Ft.) or Run No.	Blows / 6" or RQD (%)	Sample Recovery / Sample Length	Lithology Change (Depth /Ft.) or Screened Interval	MATERIAL DESCRIPTION: Soil Density/ Consistency or Rock Hardness	Color	Material Classification	USCS*	Remarks	PID/FID Reading (ppm): Sample	Sampler BZ	Borehole**	Driller BZ**
						YELL	FOR COMPLETE LITHOLOGY						
						OR	SEE 13MW10						
							5" REAM TO 20'						
							SHALY MATERIAL						
	5												
									HARDER DRILLING				
									@ 6'				
						LT			COLOR CHANGE				
						GRAY			@ 7'				
	10												
						DK	SHALY MATERIAL		@				
						GRAY							
	15												
							SHALY MATERIAL						
	20												
							WELL SET @ 20' 2" PVC						
							SCREENED 10'-20'						
							SAND TO 8'						
							BENT TO 7'						

* When rock coring, enter rock brokeness.

** Include monitor reading in 6 foot intervals @ borehole. Increase reading frequency if elevated reponse read.

Remarks:

Drilling Area Background (ppm): 7

Converted to Well: Yes X No

Well I.D. #: 13MW109

Tetra Tech NUS, Inc.

BEDROCK
MONITORING WELL SHEET

WELL No.: 13MW709

PERMIT No:

PROJECT:	NSWC CRANE	DRILLING Co.:	BOWSER MORNER	BORING No.:	13MW709
PROJECT No.:	9060 CTO 0279	DRILLER:	DAVES.	DATE COMPLETED:	4/1/03
SITE:	SWMU 13	DRILLING METHOD:	ROTOSONIC	NORTHING:	1309662.066
GEOLOGIST:	B. BALKOVEC	DEV. METHOD:	WATTERA	EASTING:	3024044.030

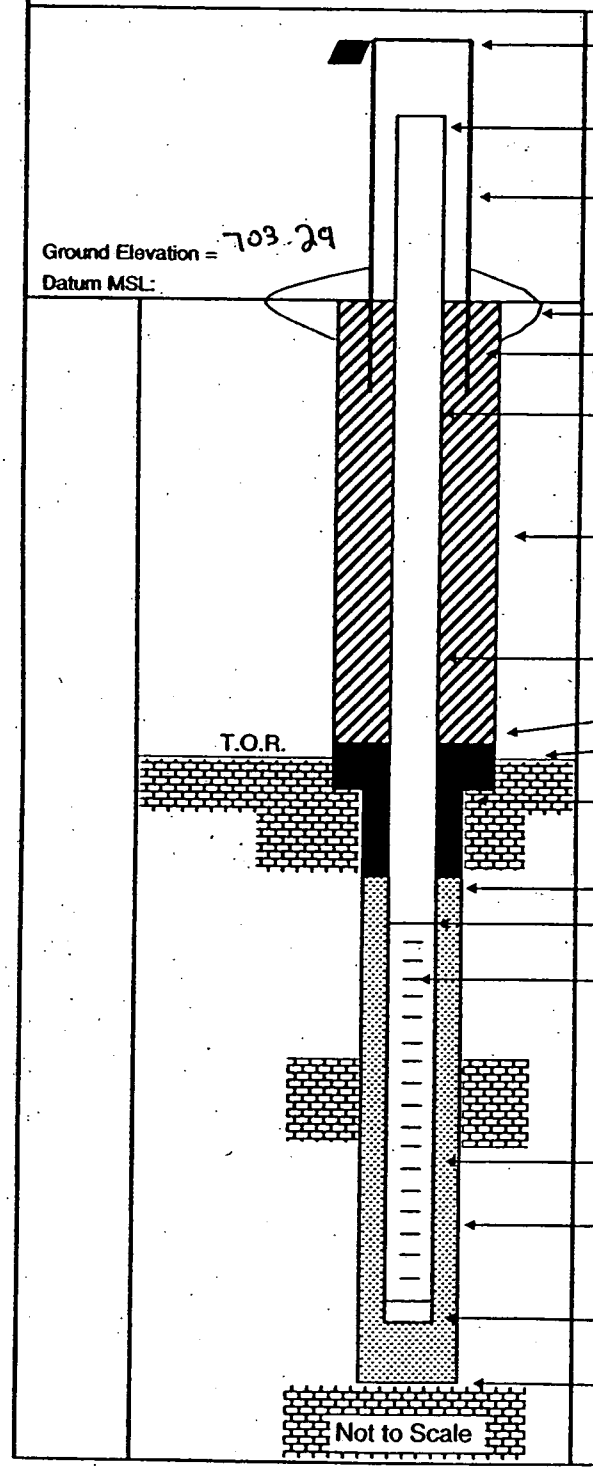

Elevation of Top of Casing: 706.37

Stick Up of Casing Above Ground Surface: 2.61'

Elevation of Top of Riser: 705.90

I.D. of Surface Casing: 4" SQUARE

Type of Surface Casing: STEEL

Type of Surface Seal: 4'x4'x6" PAD

I.D. of Permanent Casing: NA

I.D. of Riser: 2"

Type of Riser: PVC

Borehole Diameter: 5"

Type of Backfill: GROUT

Elevation / Depth Top of Seal: 701.29 / 2'

Elevation / Depth Top of Bedrock: 697.29 / ≈ 6'

Type of Seal: BENT. CHIPS

Elevation / Depth of Top of Filter Pack: 695.29 / 8'

Elevation / Depth of Top of Screen: 693.29 / 10'

Type of Screen: PVC

Slot Size x Length: .20 x 10'

I.D. of Screen: 2"

Type of Filter Pack: No. 20-40 SAND

Diameter of Hole in Bedrock: Core / Ream: 5"

Elevation / Depth of Bottom of Screen: 683.29 / 20'

Elevation / Total Depth of Borehole: 683.29 / 20'

Tetra Tech NUS, Inc.

BORING LOG

PROJECT NAME: NSWC CRANE
PROJECT NUMBER: N9060 CTO 0279
DRILLING COMPANY: BOWSER MORNER
DRILLING RIG: ROTOSONIC

BORING NUMBER: B3MW TWO
DATE: 3/27/03
GEOLOGIST: BOB BALKOVEC
DRILLER: DAVE S.

Sample No. and Type or RQD	Depth (Ft.) or Run No.	Blows / 6" or RQD (%)	Sample Recovery / Sample Length	Lithology Change (Depth /Ft.) or Screened Interval	Soil Density/ Consistency or Rock Hardness	Color	Material Classification	USCS	Remarks	PID/FID Reading (ppm) Sample	Sample BZ	Borehole**	Driller BZ
	1				MOIST &	BR	TOP. 5' TOP SOIL		HIT CONCRETE @	0.0	0.0		
	2				MOIST	↓	.5' CLAY & SILT W/ S.S. GRAV.	ML	3' WELL OFFSET				
	3					LT BR	2-5.5' SANDY SILT W/ SOME	ML	HIT CONCRETE AGAIN				
	4					GRAY	CLAY						
S-1 1337	5		4.50 / 5'									0.0	0.0
	6					DK GRAY	SANDY SILT	ML		0.0			
	7				SOFT & DRY	LT	SILTSTONE 5.5'-14.5'	BR	ROCK @ 5.5'				
	8					GRAY		BR					
	9												
S-2 1351	10		5' / 5'			DK GRAY	(COAL CHANGE)						
	11			?	MOIST? &		SILTSTONE		COLD TO THE	0.0			
	12				STIFF				TOUCH. (10-12')				
	13												
	14												
S-3 1403	15		4.9' / 5'		DRY & LOOSE	BLK	.5' COAL SEAM		6" TO 15'				
	16					BLK	BLACK MATERIAL IN		5" BEAM 15'				
	17						CUTTINGS (COAL)						
	18					GRAY	SHALEY MATERIAL						
	19												
R-1 1530	20								BLOW OUT HOLE				
	21					GRAY	SHALEY MATERIAL		WATER @ 19' BGS				
	22												
	23					DK GRAY	SILTY MATERIAL						
	24												
R-2 1530	25								BLOW OUT HOLE WL 19' BGS.				

* When rock coring, enter rock brokeness.

** Include monitor reading in 6 foot intervals @ borehole. Increase reading frequency if elevated reponse read.

Remarks: 6' OFFSET SET WELL @ 25' 10' SCREEN
SAND TO 13'
BENT TO 11' VOL CLAY TO 4'

Drilling Area Background (ppm): 0.0

Converted to Well: Yes X No ___ Well I.D. #: B3MW TWO

Tetra Tech NUS, Inc.

BEDROCK MONITORING WELL SHEET

WELL No.: 13MW10

PERMIT No:

PROJECT:	NSWC CRANE	DRILLING Co.:	BOWSER MORNER	BORING No.:	13MW10
PROJECT No.:	9060 CTO 0279	DRILLER:	DAVE S.	DATE COMPLETED:	3/27/03
SITE:	SWMU 13	DRILLING METHOD:	ROTOSONIC	NORTHING:	1304479.643
GEOLOGIST:	B. BALKOVEC	DEV. METHOD:	WHALE PUMP	EASTING:	3024001.262

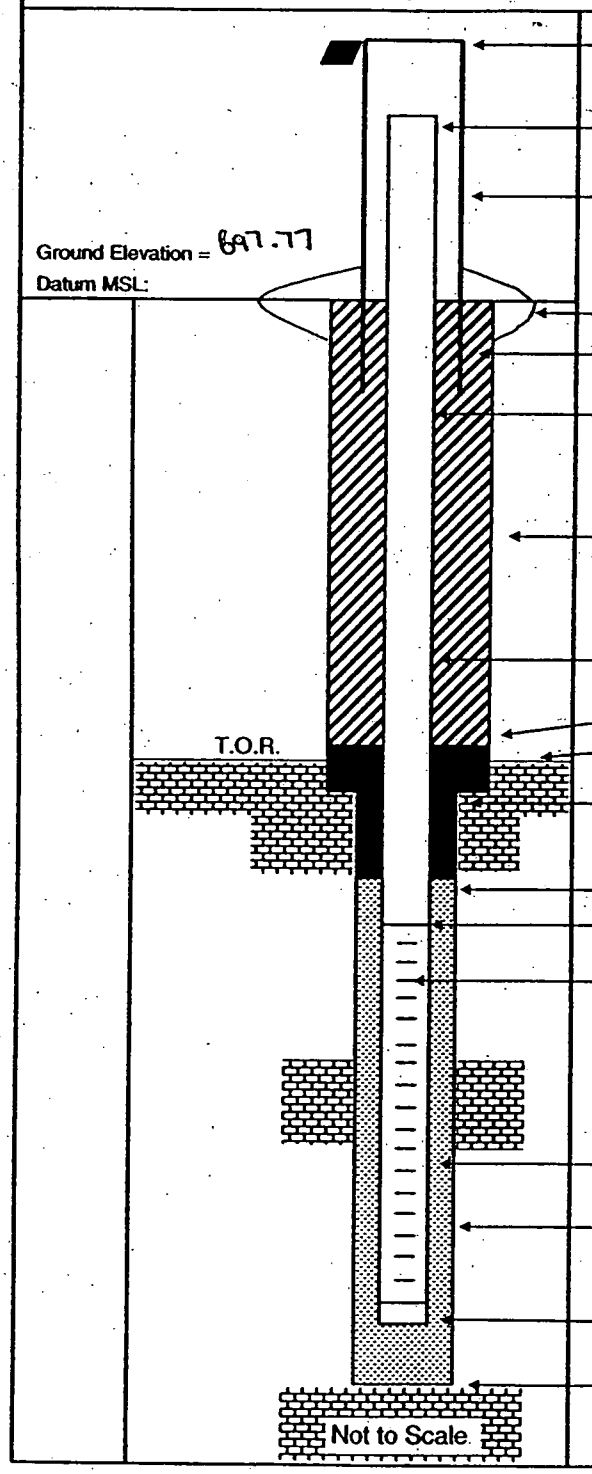

Elevation of Top of Casing: 700.64

Stick Up of Casing Above Ground Surface: 2.38

Elevation of Top of Riser: 700.15

I.D. of Surface Casing: 4" SQUARE

Type of Surface Casing: STEEL

Type of Surface Seal: 4'x4'x6" PAD

I.D. of Permanent Casing: NA

I.D. of Riser: 2"

Type of Riser: PVC

Borehole Diameter: 6" (0-15') 5" (15'-25')

Type of Backfill: VOL CLAY TO 4'

Elevation / Depth Top of Seal: 686.77 / 11'

Elevation / Depth Top of Bedrock: 692.77 / 5.5'

Type of Seal: BENT. CHIPS

Elevation / Depth of Top of Filter Pack: 684.77 / 13'

Elevation / Depth of Top of Screen: 682.77 / 15'

Type of Screen: PVC

Slot Size x Length: .20 x 10'

I.D. of Screen: 2"

Type of Filter Pack: No. 20-40 SAND

Diameter of Hole in Bedrock: Core / Ream: 5"

Elevation / Depth of Bottom of Screen: 672.77 / 25'

Elevation / Total Depth of Borehole: 672.77 / 25'

Tetra Tech NUS, Inc.

BORING LOG

PROJECT NAME: NSWC CRANE
PROJECT NUMBER: N9060 CTO 0279
DRILLING COMPANY: BOWSER MORNER
DRILLING RIG: ROTOSONIC

BORING NUMBER: 13MW711
DATE: 3/28/03
GEOLOGIST: BOB BALKOVEC
DRILLER: DAVE S.

Sample No. and Type or RQD	Depth (Ft.) or Run No.	Blows / 6" or RQD (%)	Sample Recovery / Sample Length	Lithology Change (Depth /Ft.) or Screened Interval	MATERIAL DESCRIPTION: Soil Density/ Consistency or Rock Hardness *	Color	Material Classification	USCS *	Remarks	PID/FID Reading (ppm): Sample	Sampler BZ	Borehole **	Driller BZ
						PQ	REFER TO 13MW712						
							FOR COMPLETE LITHOLOGY						
							6" CASING TO 5'						
	5						5" REAM TO 15'						
							0-7' SILTY MATERIAL						
									HARDER DRILLING				
						GRAY	SANDY MATERIAL		@ 7'				
	10												
	15												
				TO. 15'			SET WELL @ 15' 2" PVC						
							SCREENED 5'-15'						
							SAND TO 4'						
							BENT CHIPS 2'						

* When rock coring, enter rock brokeness.

** Include monitor reading in 6 foot intervals @ borehole. Increase reading frequency if elevated reponse read.

Remarks:

Drilling Area Background (ppm): —

Converted to Well: Yes X No

Well I.D. #: 13MW H

Tetra Tech NUS, Inc.

BEDROCK
MONITORING WELL SHEET

WELL No.: 13MW711

PERMIT No:

PROJECT:	NSWC CRANE	DRILLING Co.:	BOWSER MORNER	BORING No.:	13MW711
PROJECT No.:	9060 CTO 0279	DRILLER:	DAVE S.	DATE COMPLETED:	3/28/03
SITE:	SWMU 13	DRILLING METHOD:	ROTOSONIC	NORTHING:	1360233.721
GEOLOGIST:	B. BALKOVEC	DEV. METHOD:	WHALE PUMP	EASTING:	3023350.087

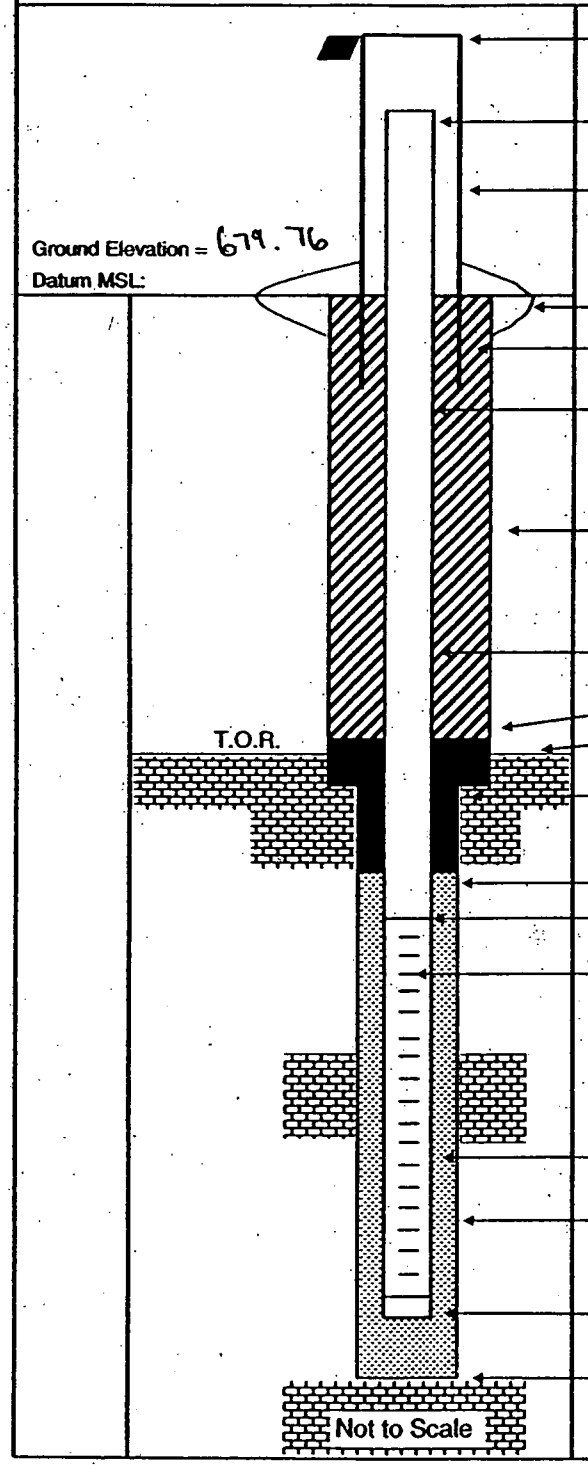

Elevation of Top of Casing: 682.82

Stick Up of Casing Above Ground Surface: 2.53

Elevation of Top of Riser: 682.29

I.D. of Surface Casing: 4" SQUARE

Type of Surface Casing: STEEL

Type of Surface Seal: 4'x4'x6" PAD

I.D. of Permanent Casing: NA

I.D. of Riser: 2"

Type of Riser: PVC

Borehole Diameter: 6" (0-5') 5" (5'-15')

Type of Backfill: GROUT

Elevation / Depth Top of Seal: 677.76 / 2'

Elevation / Depth Top of Bedrock: 672.76 / 7'

Type of Seal: BENT. CHIPS

Elevation / Depth of Top of Filter Pack: 675.76 / 4'

Elevation / Depth of Top of Screen: 674.76 / 5'

Type of Screen: PVC

Slot Size x Length: .20 x 10'

I.D. of Screen: 2"

Type of Filter Pack: No. 20-40 SAND

Diameter of Hole in Bedrock: Core / Ream: 5"

Elevation / Depth of Bottom of Screen: 664.76 / 15'

Elevation / Total Depth of Borehole: 664.76 / 15'

Tetra Tech NUS, Inc.

BORING LOG

PROJECT NAME: NSWC CRANE
PROJECT NUMBER: N9060 CTO 0279
DRILLING COMPANY: BOWSER MORNER
DRILLING RIG: Rotosonic

BORING NUMBER: 13MWT12
DATE: 3/27/03
GEOLOGIST: BOB BALKOVEC
DRILLER: DAVE S.

Sample No. and Type or RQD	Depth (Ft.) or Run No.	Blows / 6" or RQD (%)	Sample Recovery / Sample Length	Lithology Change (Depth /Ft.) or Screened Interval	MATERIAL DESCRIPTION: Soil Density/ Consistency or Rock Hardness	Color	Material Classification	USCS *	Remarks	PID/FID Reading (ppm): Sample	Sample BZ	Bkgrnd BZ	Drilling BZ
	1				MOIST.	BR	TOP .5' TOPSOIL	ML	16" 0-10'	0.0			
	2				M. STIFF	LT.	.5'-7' SILTY CLAY W/SS. FRAGS	CL	FILL .5'-5'				
	3				DRY	BR	SOME SAND						
	4												
S-1 0930	5		4.7' / 5'									0.0	0.0
	6					BRN	NO SS OR SAND	CL		0.0			
	7					RED							
	8				HARD	YELLOW	7-10' SANDSTONE W/	SR	ROCK @ 7'				
	9					GRAY	CLAYSTONE SEAMS						
S-2 0939	10		5' / 5'		DRY								
	11					G.	SANDSTONE 10-10.5'	BR		0.0			
	12		70% RQD			GRAY	SILTSTONE 10.5'-11.5'						
C-1	13		@ 1014		SOFT + WET				POSSIBLE WATER @ 13'				
	14												
	15		5' / 5'			YELL							
	16				HARD	GR	SANDSTONE 14.5'-16'			0.0			
	17		64% RQD			GRAY	16'-18.5' SILTSTONE		MODERATE FRACT. 16'-19.5'				
C-2	18		@ 1027										
	19												
	20		4.9' / 5'				18.5'-20' SANDSTONE						
				T.D. 20'			WELL SET @ 20' 2" PVC						
							SCREENED 10'-20'						
							SAND 8'						
							BENT ~ 4'						

* When rock coring, enter rock brokeness.

** Include monitor reading in 6 foot intervals @ borehole. Increase reading frequency if elevated reponse read.

Drilling Area Background (ppm): 0.0

Remarks:

Converted to Well: Yes X No ____ Well I.D. #: 13MWT12

Tetra Tech NUS, Inc.

BEDROCK
MONITORING WELL SHEET

WELL No.: 13MW712

PERMIT No: —

PROJECT:	NSWC CRANE	DRILLING Co.:	BOWSER MORNER	BORING No.:	13MW712
PROJECT No.:	9060 CTO 0279	DRILLER:	DAVE S	DATE COMPLETED:	3/27/03
SITE:	SWMU 13	DRILLING METHOD:	ROTOSONIC	NORTHING:	1310080.207
GEOLOGIST:	B. BALKOVEC	DEV. METHOD:	WHALE PUMP	EASTING:	302357.945

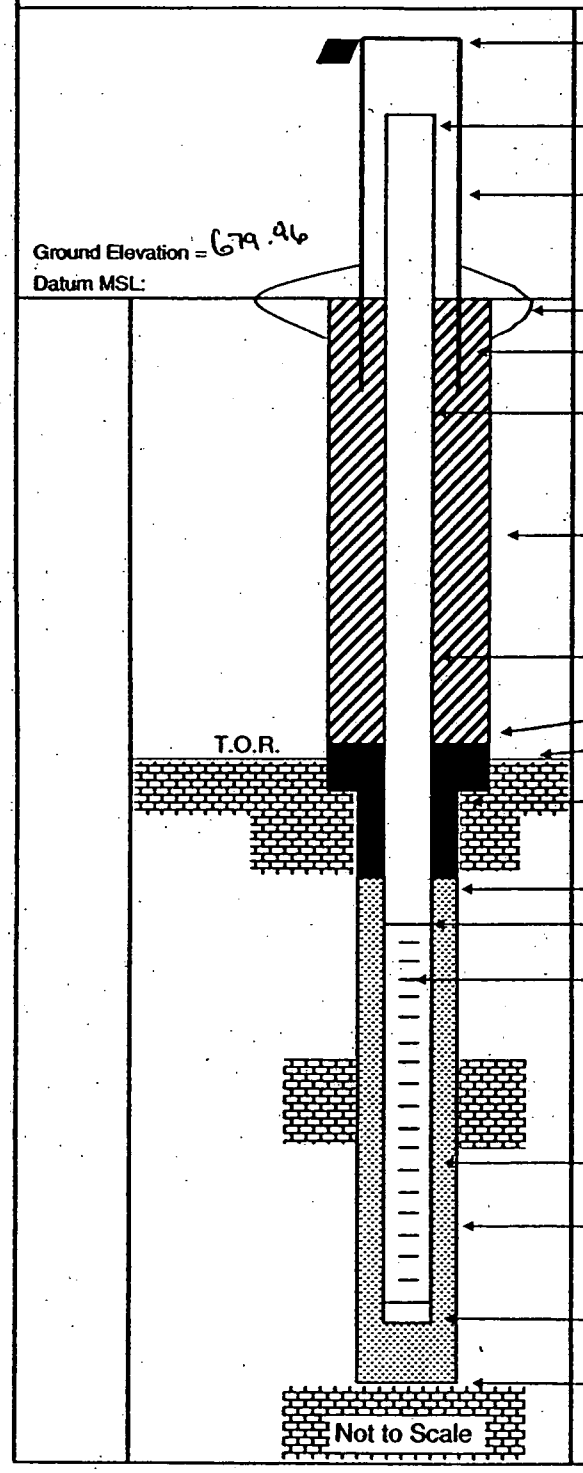

Elevation of Top of Casing: 682.66

Stick Up of Casing Above Ground Surface: 2.16

Elevation of Top of Riser: 682.12

I.D. of Surface Casing: 4" SQUARE

Type of Surface Casing: STEEL

Type of Surface Seal: 4'x4'x6" PAD

I.D. of Permanent Casing: NA

I.D. of Riser: 2"

Type of Riser: PVC

Borehole Diameter: 6" (0-10') 5" (10'-20')

Type of Backfill: GROUT/CEMENT

Elevation / Depth Top of Seal: 675.96 / 4'

Elevation / Depth Top of Bedrock: 672.96 / 7'

Type of Seal: BENT. CHIPS

Elevation / Depth of Top of Filter Pack: 672.96 / 8'

Elevation / Depth of Top of Screen: 669.96 / 10'

Type of Screen: PVC

Slot Size x Length: .20 x 10'

I.D. of Screen: 2"

Type of Filter Pack: No. 20-40 SAND

Diameter of Hole in Bedrock:
Core / Ream: 5"

Elevation / Depth of Bottom of Screen: 659.96 / 20'

Elevation / Total Depth of Borehole: 659.96 / 20'

Tetra Tech NUS, Inc.

BORING LOG

PROJECT NAME: NSWC CRANE
PROJECT NUMBER: N9060 CTO 0279
DRILLING COMPANY: BOWSER MORNER
DRILLING RIG: [redacted] HSA R26
BORING NUMBER: 13MW713
DATE: 4/23/03
GEOLOGIST: BOB BALKOVEC
DRILLER: DENNIS SZUK

Sample No. and Type or RQD	Depth (Ft.) or Run No.	Blows / 6" or RQD (%)	Sample Recovery / Sample Length	Lithology Change (Depth /Ft.) or Screened Interval	Soil Density / Consistency or Rock Hardness	Color	Material Classification	USCS*	Remarks	PID/FID Reading (ppm) Sample	Bkgrnd/BZ	Borehole	Drill/BZ
	1	3 / 3				BR	.5' TOP SOIL	M			0.0		
S-1 1260	2	3 / 4	1.6' / 2'				.5'-3.5' SILTY CLAY	CL		0.0			
	3	3 / 5					↓	L					
S-2 1262	4	7 / 7	2' / 2'			YEL	3.5'-6' SANDY SILT	ML		0.0		0.0	0.0
	5	1 / 3				GR ± GRAY	↓	↓					
S-3 1268	6	3 / 5	1.6' / 2'				↓	↓		0.0			
	7	14 / 25			MOIST -	YEL	6'-8' F-SAND	SP					
S-4 1302	8	27 / 31	2' / 2'		V. DENSE	GR	↓	↓		0.0			
	9	22 / 20			WET -		F-SAND W/ SOME SILT -	SM	WATER @ 10'				
S-5 1309	10	7 / 5	2' / 2'		DENSE		S.S. FRAGS. (8'-10.5')	↓		0.0			
	11	17 / 22				BLK	COAL 10.5'-12.5'						
S-6 1321	12	36 / 21	2' / 2'		DRY	↓	↓			0.0			
	13	22 / 30			HARD	GRAY	12.5'-13' SHALE		REFUSAL @ 13'	0.0			
S-7 1335	14	50/.4	.5' / .8'				SHALE @ 13'		ROCK @ 13.5'				
	15						WELL AUGER TO 19'						
	16						SHALE MATERIAL IN						
	17						CUTTINGS						
	18												
1350	19						↓						
				T.D. 19'			WELL SET @ 18' 2" PVC						
							SCREENED 8'-18'						
							SAND 6'						
							BENT 2'						

* When rock coring, enter rock brokeness.

** Include monitor reading in 6 foot intervals @ borehole. Increase reading frequency if elevated reponse read.

Remarks:

Drilling Area Background (ppm): 0.0

Converted to Well: Yes X No

Well I.D. #: 13MW713

Tetra Tech NUS, Inc.

BEDROCK
MONITORING WELL SHEET

WELL No.: 13MW713

PERMIT No:

PROJECT:	NSWC CRANE	DRILLING Co.:	BOWSER MORNER	BORING No.:	13MW713
PROJECT No.:	9060 CTO 0279	DRILLER:	DENNIS STUK	DATE COMPLETED:	4/23/03
SITE:	SWMU 13	DRILLING METHOD:	HSA ~~ROTOSONIC~~	NORTHING:	1304441.220
GEOLOGIST:	B. BALKOVEC	DEV. METHOD:	WATERRA	EASTING:	3024163.605

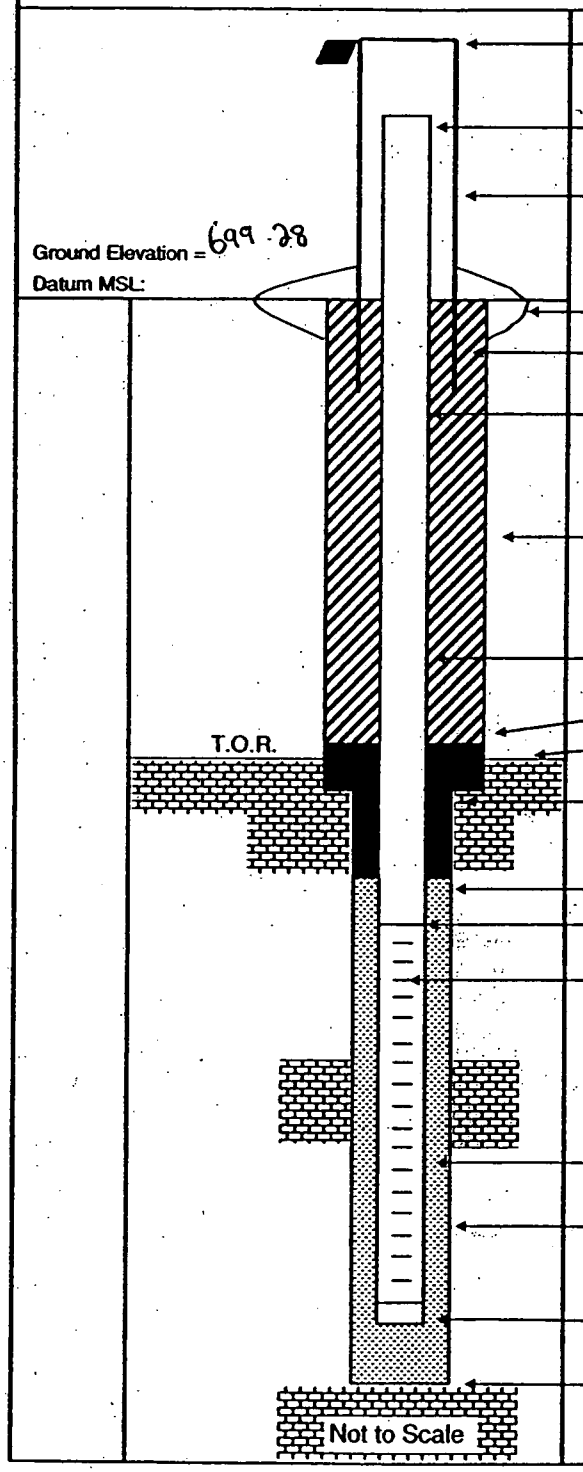

Elevation of Top of Casing:	702.40
Stick Up of Casing Above Ground Surface:	2.70
Elevation of Top of Riser:	701.98
I.D. of Surface Casing:	4" SQUARE
Type of Surface Casing:	STEEL
Type of Surface Seal:	4'x4'x6" PAD
I.D. of Permanent Casing:	NA
I.D. of Riser:	2"
Type of Riser:	PVC
Borehole Diameter:	6"
Type of Backfill:	CEMENT
Elevation / Depth Top of Seal:	697.28 / 2'
Elevation / Depth Top of Bedrock:	686.78 / 12.5'
Type of Seal:	BENTONITE
Elevation / Depth of Top of Filter Pack:	643.28 / 6'
Elevation / Depth of Top of Screen:	641.28 / 8'
Type of Screen:	PVC
Slot Size x Length:	.20 x 10'
I.D. of Screen:	2"
Type of Filter Pack:	No. 20-40 SAND
Diameter of Hole in Bedrock: Core / Ream:	6"
Elevation / Depth of Bottom of Screen:	681.28 / 18'
Elevation / Total Depth of Borehole:	680.28 / 19'

Tetra Tech NUS, Inc.

BORING LOG

PROJECT NAME: NSWC CRANE
PROJECT NUMBER: N9060 CTO 0279
DRILLING COMPANY: BOWSER MORNER
DRILLING RIG: ROTOSONIC
BORING NUMBER: B3MWT14
DATE: 3/31/03
GEOLOGIST: BOB BALKOVEC
DRILLER: DAVE S.

Sample No. and Type or RQD	Depth (Ft.) or Run No.	Blows / 6" or RQD (%)	Sample Recovery / Sample Length	Lithology Change (Depth /Ft.) or Screened Interval	MATERIAL DESCRIPTION: Soil Density/ Consistency or Rock Hardness	Color	Material Classification	USCS*	Remarks	PID/FID Reading (ppm): Sample	Sample BZ	Borehole**	Driller BZ
	1					BR	5' TOP SOIL	ML	4" SAMPLE @ 17.5'	0.0			
	2						.5'-3' CLAYEY SILT						
	3												
	4					YELLOW	3-5' SANDY SILT W/ SOME						
S-1 0914	5		4.5' / 5'			LT. GRAY	CLAY						
	6				MOIST + MOTTLED	BR	5-6.5' SANDY SILT W/ S.S FRAG	ML	WEATHERED S.S.	0.0			
	7				SOFT	LT. GRAY	6.5-7' SILT	ML					
	8				WET +	BR	7-9.5' SILT + SAND W/ S.S	SM	THIN LAMINATION				
	9			▼?	MOTTLED		FRAGS		RESISTANT @ 9'				
S-2 0934	10		4.5' / 5'			LT GRAY	9.5-10' SILTSTONE	ML	Rock @ 9.5'				
	11				SOFT +	DK	10-15' SHALEY SILTSTONE			0.0			
	12				DRY	+ LT							
	13					GRAY							
	14												
S-3 0935	15		5' / 5'										
	16					LT + DK	15-17' SHALE						
	17					GRAY							
S-4 0944	17.5		2' / 2.5'	▼	HARD	GRAY	17-17.5' SANDSTONE		REFUSAL @ 17.5'				
	18						SAND + SILT						
	19						MATRIX						
R-1	20												
	21												
	22												
W15	23												
				TD 23'									

* When rock coring, enter rock brokeness.

** Include monitor reading in 6 foot intervals @ borehole. Increase reading frequency if elevated reponse read.

Drilling Area Background (ppm): 0.0

Remarks: 5" TO 23' SET WELL @ 23' SCREENED 13'-23' SAND TO 11' BENT TO 9' VOL CLAY TO 8'

Converted to Well: Yes X No ___ Well I.D. #: B3MWT14

Tetra Tech NUS, Inc.

BEDROCK
MONITORING WELL SHEET

WELL No.: 13MWT14

PERMIT No:

PROJECT:	NSWC CRANE	DRILLING Co.:	BOWSER MORNER	BORING No.:	13MWT14
PROJECT No.:	9060 CTO 0279	DRILLER:	DAVE S.	DATE COMPLETED:	3/21/03
SITE:	SWMU 13	DRILLING METHOD:	ROTOSONIC	NORTHING:	1309142.232
GEOLOGIST:	B. BALKOVEC	DEV. METHOD:	WATTERA	EASTING:	302410.167

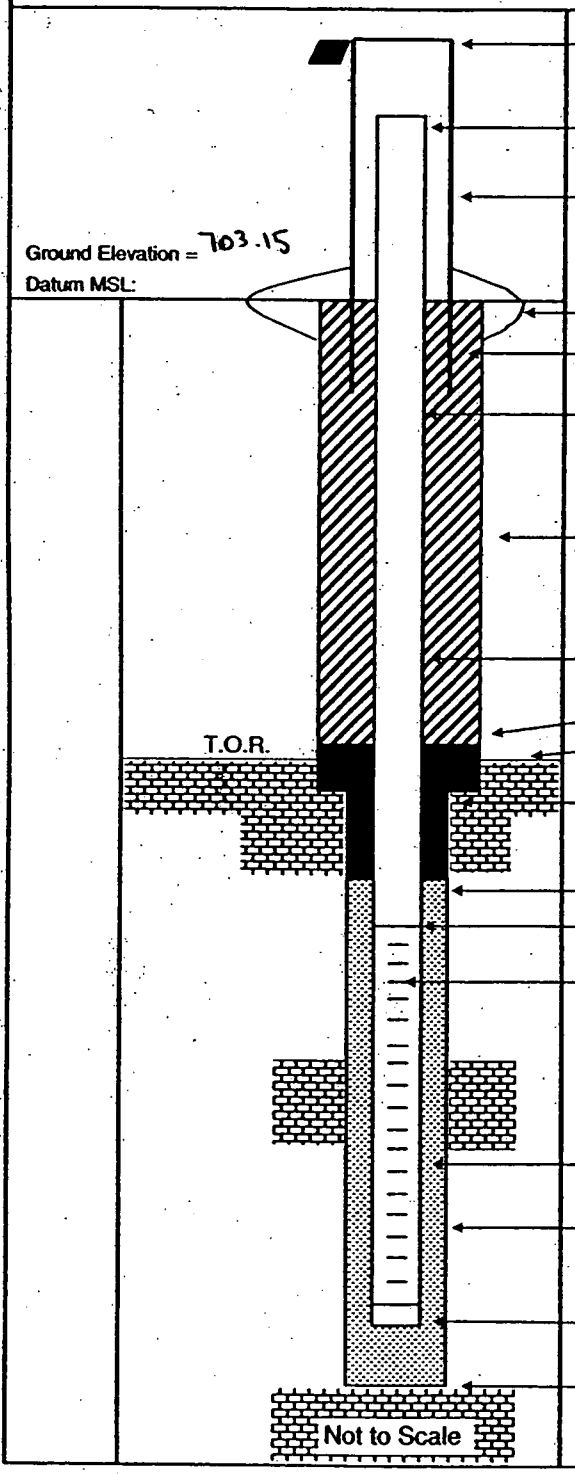

Elevation of Top of Casing: 705.98

Stick Up of Casing Above Ground Surface: 2.35

Elevation of Top of Riser: 705.50

I.D. of Surface Casing: 4" SQUARE

Type of Surface Casing: STEEL

Type of Surface Seal: 4'x4'x6" PAD

I.D. of Permanent Casing: NA

I.D. of Riser: 2"

Type of Riser: PVC

Borehole Diameter: 5"

Type of Backfill: VOL CLAY (2'-4')

Elevation / Depth Top of Seal: 694.15 / 9'

Elevation / Depth Top of Bedrock: 693.65 / 9.5'

Type of Seal: BENT. CHIPS

Elevation / Depth of Top of Filter Pack: 692.15 / 11'

Elevation / Depth of Top of Screen: 690.15 / 13'

Type of Screen: PVC

Slot Size x Length: .20 x 10'

I.D. of Screen: 2"

Type of Filter Pack: No. 20-40 SAND

Diameter of Hole in Bedrock:
Core / Ream: 5"

Elevation / Depth of Bottom of Screen: 680.15 / 23'

Elevation / Total Depth of Borehole: 680.15 / 23'

Tetra Tech NUS, Inc.

BORING LOG

PROJECT NAME: NSWC CRANE
PROJECT NUMBER: N9060 CTO 0279
DRILLING COMPANY: BOWSER MORNER
DRILLING RIG: ROTOSONIC
BORING NUMBER: 13MW T15
DATE: 3/25/03
GEOLOGIST: BOB BALKOVEC
DRILLER: DAVE S.

Sample No. and Type or RQD	Depth (FL) or Run No.	Blows / 6" or RQD (%)	Sample Recovery / Sample Length	Lithology Change (Depth /FL) or Screened Interval	Soil Density/ Consistency or Rock Hardness	Color	Material Classification	USCS *	Remarks	PID/FID Reading (ppm) Sample	Sampler BZ	Borehole**	Driller BZ
	1				DRY M.STIFF	BR	SILTY CLAY 0-2.5'	CL	6" CASING 0-15'	0.0			
	2						T-SAND						
	3					YELL	CLAY W/ SILT 2.5-7.5'						
	4					OL				1.7			
S1 0277	5		4.5 / 5'							0.0			
	6					YELL OR		CL	MOTTLED	0.0			
	7					LT							
	8					GRAY							
	9						CLAY W/ INTERBEDDED						
S2 1236	10		5' / 5'				SILT SEAMS (HARD FORMS)						
	11							CL		0.0			
	12												
	13												
	14				SOFT +	GRAY	SILTSTONE 15'-18'	PL	DK				
S3 1245	15		5' / 5'		DRY				6" TO 15'				
	16						SILTY MATERIAL		5" TO 25'				
	17								WL @ 17' @ 1741				
	18								AFTER FLUSHING				
	19					BLACK	BLACK MATERIAL COMING		@ 25'				
B-1	20						OUT OF THE HOLE						
	21					GRAY	SILTY MATERIAL						
	22												
	23					LT							
	24					GRAY							
	25												

* When rock coring, enter rock brokeness.

** Include monitor reading in 6 foot intervals @ borehole. Increase reading frequency if elevated reponse read.

Drilling Area Background (ppm): 0.0

Remarks: 4" TO 15' FOLLOWED BY 6" WELL SET @ 25' 15-25'
SAND TO 13
BENT TO 11 WELL CAP TO 4'

Converted to Well: Yes X No ___ Well I.D. #: ___

Tetra Tech NUS, Inc.

BEDROCK
MONITORING WELL SHEET

WELL No.: 13MW715

PERMIT No:

PROJECT:	NSWC CRANE	DRILLING Co.:	BOWSER MORNER	BORING No.:	13MW715
PROJECT No.:	9060 CTO 0279	DRILLER:	DAVE S.	DATE COMPLETED:	3/25/03
SITE:	SWMU 13	DRILLING METHOD:	ROTOSONIC	NORTHING:	1304565.518
GEOLOGIST:	B. BALKOVEC	DEV. METHOD:	WHALE PUMP	EASTING:	3023717.803

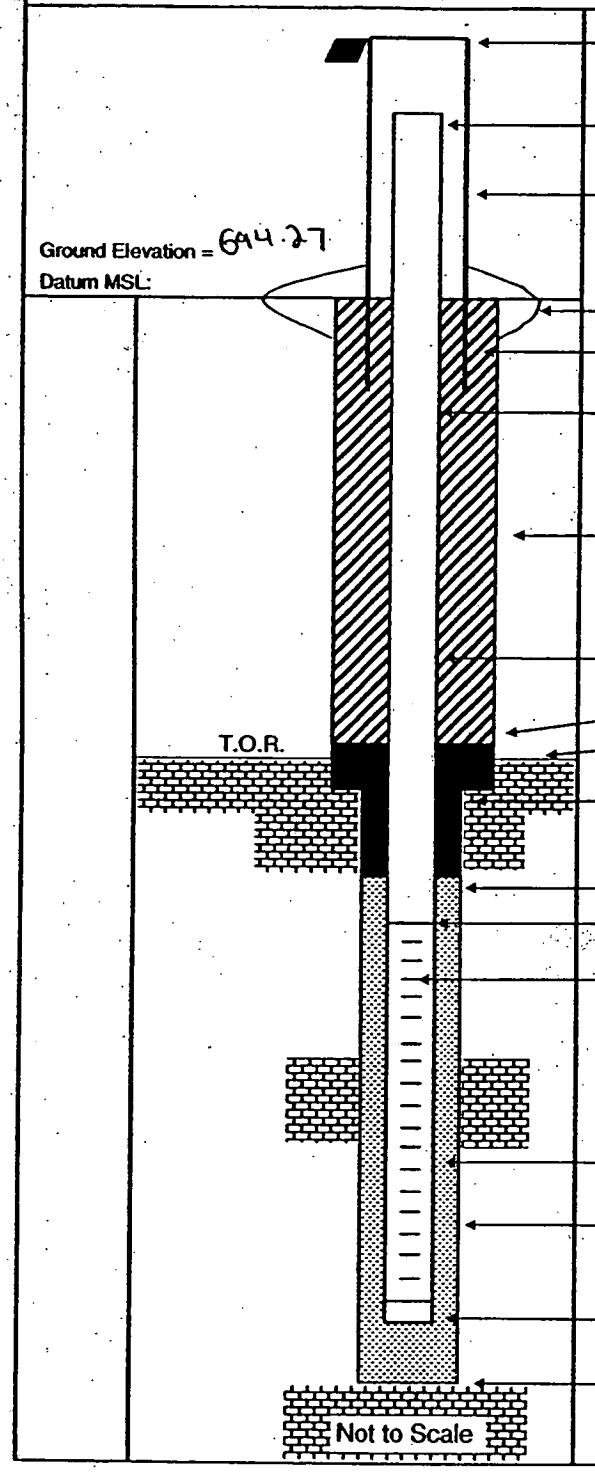

Elevation of Top of Casing: 697.16

Stick Up of Casing Above Ground Surface: 2.38'

Elevation of Top of Riser: 696.65

I.D. of Surface Casing: 4" SQUARE

Type of Surface Casing: STEEL

Type of Surface Seal: 4'x4'x6" PAD

I.D. of Permanent Casing: NA

I.D. of Riser: 2"

Type of Riser: PVC

Borehole Diameter: 6" (0-15') 5" (15'-25')

Type of Backfill: VOL-CLAY (4'-11')

Elevation / Depth Top of Seal: 683.27 / 11'

Elevation / Depth Top of Bedrock: 681.27 / 13'

Type of Seal: BENT CHIPS

Elevation / Depth of Top of Filter Pack: 681.27 / 13'

Elevation / Depth of Top of Screen: 679.27 / 15'

Type of Screen: PVC

Slot Size x Length: .20 x 10'

I.D. of Screen: 2"

Type of Filter Pack: No. 20-40 SAND

Diameter of Hole in Bedrock: Core / Ream: 5"

Elevation / Depth of Bottom of Screen: 669.27 / 25'

Elevation / Total Depth of Borehole: 669.27 / 25'

Tetra Tech NUS, Inc.

BORING LOG

PROJECT NAME: NSWC CRANE
PROJECT NUMBER: N9060 CTO 0279
DRILLING COMPANY: BOWSER MORNER
DRILLING RIG: ROTOSONIC

BORING NUMBER: BMWT16
DATE: 5/27/03
GEOLOGIST: BOB BALKOVEC
DRILLER: DAVE S.

Sample No. and Type or RQD	Depth (Ft.) or Run No.	Blows / 6" or RQD (%)	Sample Recovery / Sample Length	Lithology Change (Depth /Ft.) or Screened Interval	MATERIAL DESCRIPTION: Soil Density/ Consistency or Rock Hardness	Color	Material Classification	USCS*	Remarks	PID/FID Reading (ppm): Sample	Sampler BZ	Borehole**	Driller BZ
	0						DRIVE 6" CASING TO 15'				0.0		0.0
							WASHED OUT HOLE						
							-REFER TO BMWT17						
							FOR COMPLETE						
							LITHOLOGY						
							0-5' SANDY MATERIAL						
							5'-10' CLAYEY MATERIAL						
									HARD DRILLING				
							10-15' SILTY MATERIAL		@ 10'				0.0
	15												
				T.D. 15'			SET WELL @ 15' 2" PVC						
							SCREENED 5'-15'						
							SAND TO 4'						
							BENT TO 2'						

* When rock coring, enter rock brokeness.

** Include monitor reading in 6 foot intervals @ borehole. Increase reading frequency if elevated reponse read.

Remarks:

Drilling Area Background (ppm): 0.0

Converted to Well: Yes X No _____ Well I.D. #: BMWT16

Tetra Tech NUS, Inc.

BEDROCK MONITORING WELL SHEET

WELL No.: 13MW116

PERMIT No:

PROJECT:	NSWC CRANE	DRILLING Co.:	BOWSER MORNER	BORING No.:	13MW116
PROJECT No.:	9060 CTO 0279	DRILLER:	DAVE S.	DATE COMPLETED:	3/27/03
SITE:	SWMU 13	DRILLING METHOD:	ROTOSONIC	NORTHING:	1309854.276
GEOLOGIST:	B. BALKOVEC	DEV. METHOD:	WHALE PUMP	EASTING:	3023341.916

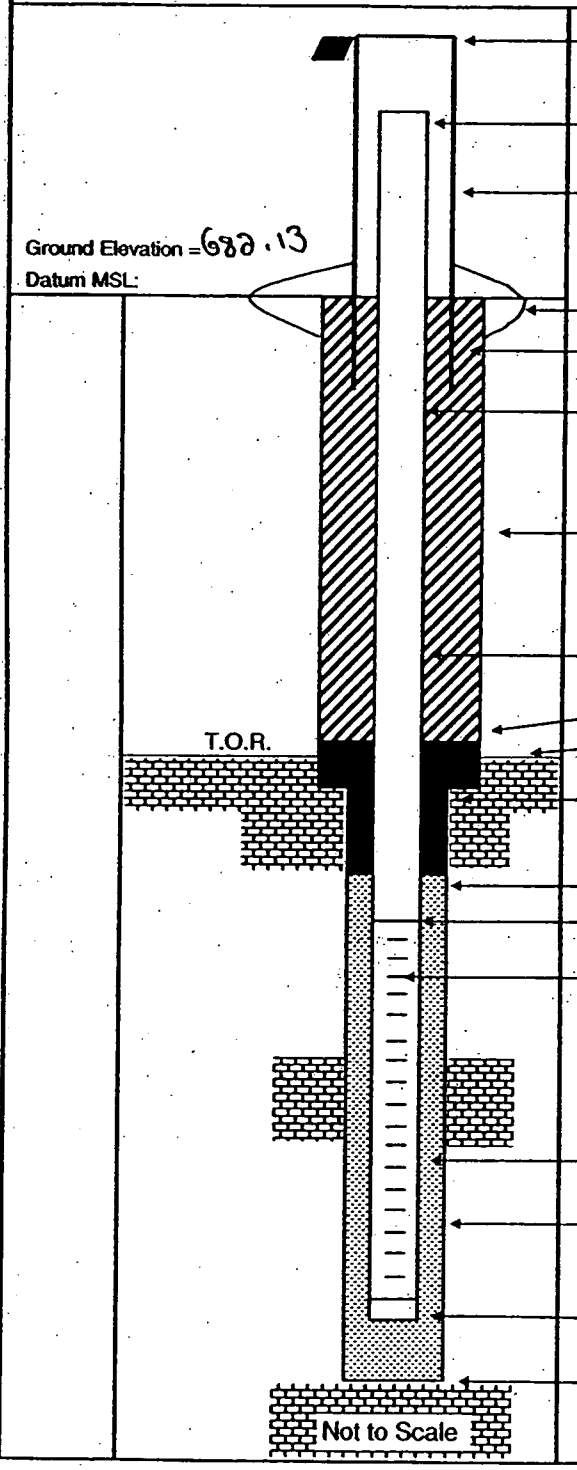

Elevation of Top of Casing: 684.93

Stick Up of Casing Above Ground Surface: 2.22

Elevation of Top of Riser: 684.35

I.D. of Surface Casing: 4" SQUARE

Type of Surface Casing: STEEL

Type of Surface Seal: 4'x4'x6" PAD

I.D. of Permanent Casing: NA

I.D. of Riser: 2"

Type of Riser: PVC

Borehole Diameter: 5"

Type of Backfill: GROUT

Elevation / Depth Top of Seal: 680.13 / 2'

Elevation / Depth Top of Bedrock: 672.13 / 10'

Type of Seal: BENT CHIPS

Elevation / Depth of Top of Filter Pack: 678.13 / 4'

Elevation / Depth of Top of Screen: 677.13 / 5'

Type of Screen: PVC

Slot Size x Length: .20 x 10'

I.D. of Screen: 2"

Type of Filter Pack: No. 20-40 SAND

Diameter of Hole in Bedrock:
Core / Ream 5"

Elevation / Depth of Bottom of Screen: 667.13 / 15'

Elevation / Total Depth of Borehole: 667.13 / 15'

Tetra Tech NUS, Inc.

BORING LOG

PROJECT NAME: NSWC CRANE
PROJECT NUMBER: N9060 CTO 0279
DRILLING COMPANY: BOWSER MORNER
DRILLING RIG: ROTOSONIC

BORING NUMBER: 13MW717
DATE: 3/26/03
GEOLOGIST: BOB BALKOVEC
DRILLER: DAVE S.

Sample No. and Type or RQD	Depth (FL) or Run No.	Blows / 6" or RQD (%)	Sample Recovery / Sample Length	Lithology Change (Depth /FL) or Screened Interval	MATERIAL DESCRIPTION: Soil Density/ Consistency or Rock Hardness*	Color	Material Classification	USCS*	Remarks	PID/FID Reading (ppm): Sample	Breathing Zone	Background	Drilling
	1				DRY & LOSE	BLK	CINDERS + GRAVEL .5'	GM	4" SAMPLE 0-.5'	0.0			
	2				↓	↓	↓	↓	.5'-2' FILL	↓			
	3					BR	SANDSTONE FRAGS						
	4					↓	↓						
S1 RQD	5		1.5'/5'		↓	↓	↓	↓		↓			
	6				DRY M. STIFF	YELL OR + LT	SILTY CLAY 5-8.5	CL	MED PLASTICITY	0.0			
	7				↓		↓	↓		↓			
	8					GRAY							
	9				STIFF	↓	CLAYEY SILT 8.5-10'	ML					
S2 1540	10		5'/5'	▼	↓	↓	↓ T-SAND	↓		↓			
	11			WATER	↓	YELL OR + LT GRAY	SILT + SANDSTONE	PT	WET 10-11.5'	0.0			
	12				↓		FRAGS 10-13'	↓	WELL SET 6"-20'	↓			
	13				DRY & LOSE	BLK	COAL SEAM 13-13.5'		+ BEAM 8'-15'				
	14				↓	GRAY	13.5'-15' SILT STONE		POSS. WATER @ 10'				
S3 1550	15		5'/5'		↓	↓	HIGH WEATHERED			↓			
	16					GRAY	15'-18' SILTY MATERIAL						
	17						COMING OUT OF THE						
	18					↓	CASING	↓					
				TD 18'									
							WATER TO 11 @ 1558						
							WELL SET @ 18' 2" PVC						
							SCREENED 8'-18'						
							SAND TO 6'						
							BENT TO 3'						

* When rock coring, enter rock brokeness.

** Include monitor reading in 6 foot intervals @ borehole. Increase reading frequency if elevated reponse read.

Remarks: 1

Drilling Area Background (ppm): 0.0

Converted to Well: Yes X No ___ Well I.D. #: 13MW717

Tetra Tech NUS, Inc.

BEDROCK
MONITORING WELL SHEET

WELL No.: 13MW717

PERMIT No:

PROJECT:	NSWC CRANE	DRILLING Co.:	BOWSER MORNER	BORING No.:	13MW717
PROJECT No.:	9060 CTO 0279	DRILLER:	DAVE S.	DATE COMPLETED:	3/26/03
SITE:	SWMU 13	DRILLING METHOD:	ROTOSONIC	NORTHING:	1309605.272
GEOLOGIST:	B. BALKOVEC	DEV. METHOD:	WATTERA	EASTING:	3023123.466

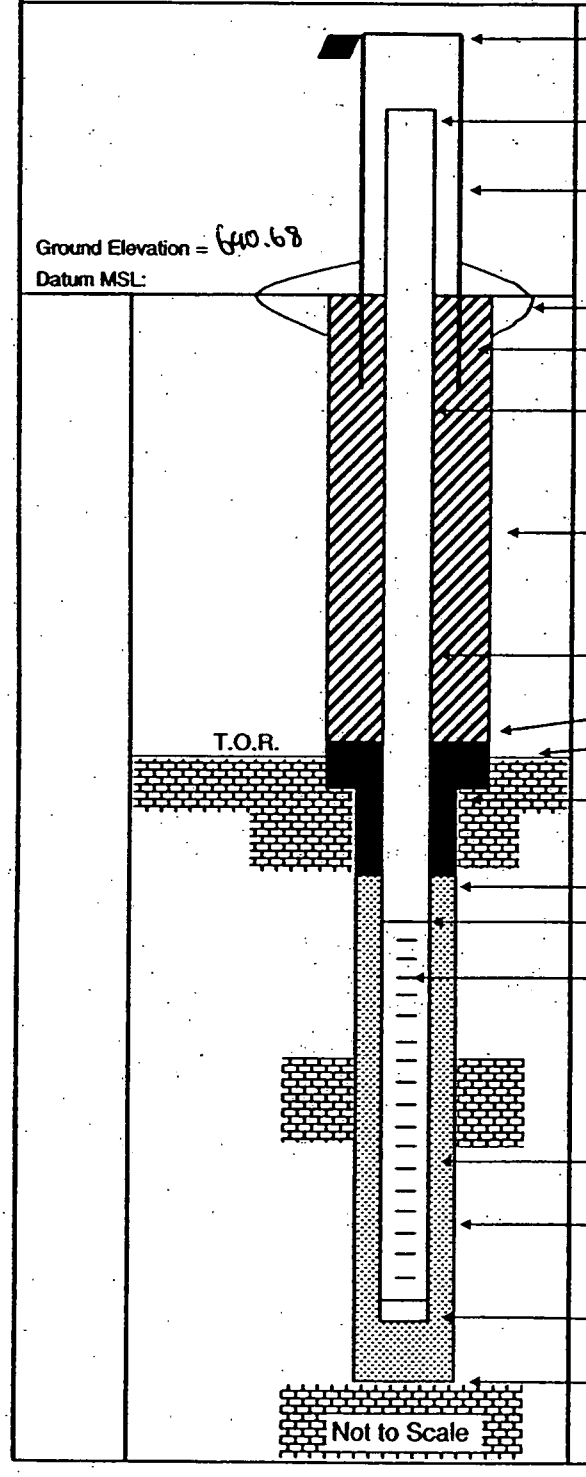

Elevation of Top of Casing: 643.69

Stick Up of Casing Above Ground Surface: 2.33'

Elevation of Top of Riser: 643.01

I.D. of Surface Casing: 4" SQUARE

Type of Surface Casing: STEEL

Type of Surface Seal: 4'x4'x6" PAD

I.D. of Permanent Casing: NA

I.D. of Riser: 2"

Type of Riser: PVC

Borehole Diameter: 6" 0-8'
5" 8'-18'

Type of Backfill: CEMENT

Elevation / Depth Top of Seal: 640.68 / 3'

Elevation / Depth Top of Bedrock: 630.68 / 10'

Type of Seal: BENT. CHIPS

Elevation / Depth of Top of Filter Pack: 634.68 / 6'

Elevation / Depth of Top of Screen: 632.68 / 8'

Type of Screen: PVC

Slot Size x Length: .20 x 40'

I.D. of Screen: 2"

Type of Filter Pack: No. 20-40 SAND

Diameter of Hole in Bedrock:
Core / Ream: 5" CORE 10'-15'
5" REAM 15'-18'

Elevation / Depth of Bottom of Screen: 622.68 / 18'

Elevation / Total Depth of Borehole: 622.68 / 18'

Tetra Tech NUS, Inc.

BORING LOG

PROJECT NAME: NSWC CRANE
PROJECT NUMBER: N9060 CTO 0279
DRILLING COMPANY: BOWSER MORNER
DRILLING RIG: Rotto Sonic

BORING NUMBER: 13MW718
DATE: 3/25/03 - 3/26/03
GEOLOGIST: BOB BALKOVEC
DRILLER: DAVE S.

Sample No. and Type or RQD	Depth (Ft.) or Run No.	Blows / 6" or RQD (%)	Sample Recovery / Sample Length	Lithology Change (Depth /Ft.) or Screened Interval	MATERIAL DESCRIPTION: Soil Density/ Consistency or Rock Hardness	Color	Material Classification	USCS*	Remarks	PID/FID Reading (ppm): Sample	Sampler BZ	Borehole	Driller BZ
	1				M.STIFF	YELL	0-8' SILTY CLAY	CL	MOTTLED	0.0			
	2				DRY	GR			6" CASING 0-20'				
	3					LT GRAY							
	4												
S1 1634	5		4.5' / 5'										
	6									0.0		0.0	0.0
	7												
	8												
1/25	9				M.STIFF		8-10' INTERBEDDED	ML					
S2 1638	10		5' / 5'				CLAY + SILT						
	11				M.STIFF	YELL	WEATHERED SILTSTONE	WR		0.0			
	12				MOIST	GR	(10'-15')						
	13					GRAY							
	14					PURPLE							
S3 1654	15		4.5' / 5'										
	16				HARD	LT	SILTSTONE 15'-20'	BR	COMPETENT ROCK	0.0			
	17					GRAY			@ 15'				
	18												
	19								DRY 0-20'				
S4 1716	20		5' / 5'										
	21				HARD	LT	SANDSTONE 20-21.5'	MS		0.0			
	22		72% RQD			BR							
1/26 C1	23		080%		WET	LT GRAY	SHALE 21.5'-25'	BR	POSSIBLE WATER				
	24				HARD				ZONE.				
	25		5' / 5'										

* When rock coring, enter rock brokeness.

** Include monitor reading in 6 foot intervals @ borehole. Increase reading frequency if elevated reponse read.

Remarks:

Drilling Area Background (ppm): 0.0

Converted to Well: Yes ✓ No

Well I.D. #: 13MW718

Tetra Tech NUS, Inc.

BORING LOG

PROJECT NAME: NSWC CRANE
PROJECT NUMBER: N9060 CTO 0279
DRILLING COMPANY: BOWSER MORNER
DRILLING RIG: Rotto Sonic

BORING NUMBER: B MW718
DATE: 3/26/03
GEOLOGIST: BOB BALKOVEC
DRILLER: DAVE S.

Sample No. and Type or RQD	Depth (Ft.) or Run No.	Blows / 6" or RQD (%)	Sample Recovery / Sample Length	Lithology Change (Depth /Ft.) or Screened Interval	MATERIAL DESCRIPTION: Soil Density/ Consistency or Rock Hardness	Color	Material Classification	USCS *	Remarks	PID/FID Reading (ppm): Sample	Sampler BZ	Borehole**	Drill Air BZ
	26				SOFT	LT GRY	25'-27' SILTSTONE	VBR		0.0			
	27				↓	↓	↓	↓		↓			
	28					LT BR	27'-29.5' SANDSTONE	BR					
	29					↓		↓					
	30		9.5' / 10'			BLK	29.5'-30' COAL	-					
				T.D. 30'									
							WELL SET @ 30' 2" PVC						
							SCREENED 20'-30'						
							SAND TO 18'						
							BENT TO 16'						
							VOLCLAY TO 3'						

* When rock coring, enter rock brokeness.

** Include monitor reading in 6 foot intervals @ borehole. Increase reading frequency if elevated reponse read.

Remarks:

Drilling Area Background (ppm): 0.0

Converted to Well: Yes ✓ No ____ Well I.D. #: BMW718

Tetra Tech NUS, Inc.

BEDROCK MONITORING WELL SHEET

WELL No.: 13MW718

PERMIT No: —

PROJECT:	NSWC CRANE	DRILLING Co.:	BOWSER MORNER	BORING No.:	13MW718
PROJECT No.:	9060 CTO 0279	DRILLER:	DAVE S	DATE COMPLETED:	3/26/03
SITE:	SWMU 13	DRILLING METHOD:	ROTOSONIC	NORTHING:	1309326.980
GEOLOGIST:	B. BALKOVEC	DEV. METHOD:	WHALE PUMP	EASTING:	3023243.416

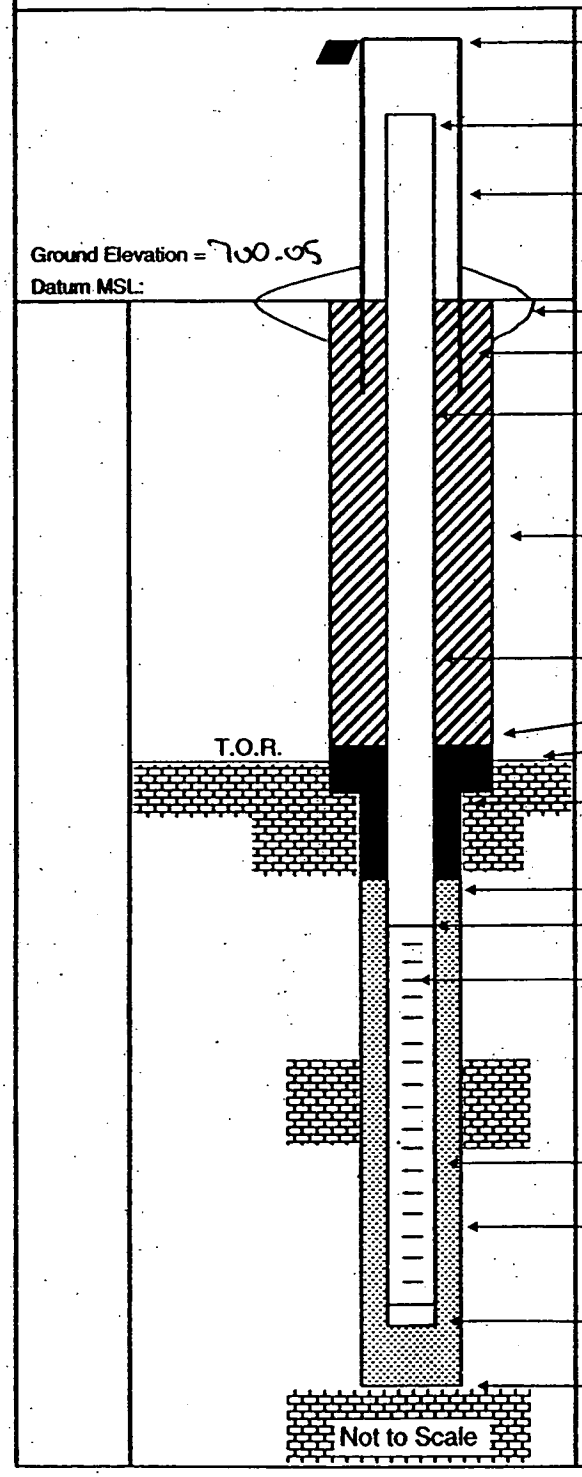

Elevation of Top of Casing: 703.43

Stick Up of Casing Above Ground Surface: 3.87'

Elevation of Top of Riser: 702.92

I.D. of Surface Casing: 4" SQUARE

Type of Surface Casing: STEEL

Type of Surface Seal: 4'x4'x6" PAD

I.D. of Permanent Casing: NA

I.D. of Riser: 2"

Type of Riser: PVC

Borehole Diameter: 6" 0-15' / 5" 15'-30'

Type of Backfill: VOL CLAY (3'-16')

Elevation / Depth Top of Seal: 694.05 / 16'

Elevation / Depth Top of Bedrock: 685.05 / 15'

Type of Seal: BENT. CHIPS

Elevation / Depth of Top of Filter Pack: 682.05 / 18'

Elevation / Depth of Top of Screen: 680.05 / 20'

Type of Screen: PVC

Slot Size x Length: .20 x 10'

I.D. of Screen: 2"

Type of Filter Pack: No. 20-40 SAND

Diameter of Hole in Bedrock:
Core / Ream: 5"

Elevation / Depth of Bottom of Screen: 670.05 / 30'

Elevation / Total Depth of Borehole: 670.05 / 30'

Tetra Tech NUS, Inc.

BORING LOG

PROJECT NAME: NSWC CRANE
PROJECT NUMBER: N9060 CTO 0279
DRILLING COMPANY: BOWSER MORNER
DRILLING RIG: ROTOSONIC

BORING NUMBER: B3MW719
DATE: 3/31/03
GEOLOGIST: BOB BALKOVEC
DRILLER: DAVE S.

Sample No. and Type or RQD	Depth (FL) or Run No.	Blows / 6" or RQD (%)	Sample Recovery / Sample Length	Lithology Change (Depth /FL) or Screened Interval	MATERIAL DESCRIPTION: Soil Density/ Consistency or Rock Hardness	Color	Material Classification	USCS*	Remarks	PID/FID Reading (ppm): Background	Sample Zone	Sample Zone	Borehole	Sample Zone
	1				DRY & SOFT	BR	.5' TOP SOIL	ML		0.0				
	2				MOIST M.STIFF	DRK BR	.5'-4' CLAYEY SILT & GRAVEL		(MOTTLED) FILL					
	3					GRAY								
S1 1234	4		3.9' / 4'				4-5.5' SANDY SILT W/ SOME CLAY		WEATHERED S.S					
	5				DRY & M.STIFF		SANDY SILT + SS CHUNKS		6" TO 5'	0.0				
	6				HARD		5.5'-6' CLAYSTONE SEAM							
	7				DRY & M.DENSE	BR & TAN	SANDY SILT 6'-7'							
	8				MOIST &		SANDSTONE 7'-9'		WEATHERED @ 7.5'					
S2 1252	9		5' / 5'		M.DENSE	YELL BR		DK	HARD 8-9'					
	10				MOIST &		SANDY SILT 9-11'	ML	5" CORE 9-19'					
	11		61% RQD		M.STIFF									
C1	12		@1346		WET & SOFT		.5' SILT 11-11.5'	ML						
	13				WET & M.DENSE		11.5'-13' SILTY SAND + SSTONES	SM	POSS WATER @ 13'					
	14		4.8' / 5'		STIF & DRY		SILTSTONE	DK	THIN LAM.					
	15					GRAY	SILTY SHALE	DK						
	16													
C2	17		50% RQD											
	18		@1420											
	19		4.7' / 5'											
				T.D. 19'			WELL SET @ 19' 2" PVC							
							SCREENED 9'-19'							
							SAND TO 7'							
							BENT CHIPS TO 2'							

* When rock coring, enter rock brokeness.

** Include monitor reading in 6 foot intervals @ borehole. Increase reading frequency if elevated reponse read.

Remarks:

Drilling Area Background (ppm): 0.0

Converted to Well: Yes X No

Well I.D. #: B3MW719

Tetra Tech NUS, Inc.

BEDROCK MONITORING WELL SHEET

WELL No.: 13MW714

PERMIT No:

PROJECT:	NSWC CRANE	DRILLING Co.:	BOWSER MORNER	BORING No.:	13MW714
PROJECT No.:	9060 CTO 0279	DRILLER:	DAVE S.	DATE COMPLETED:	3/31/03
SITE:	SWMU 13	DRILLING METHOD:	ROTOSONIC	NORTHING:	1308893.971
GEOLOGIST:	B. BALKOVEC	DEV. METHOD:	WATTERA	EASTING:	3029834.565

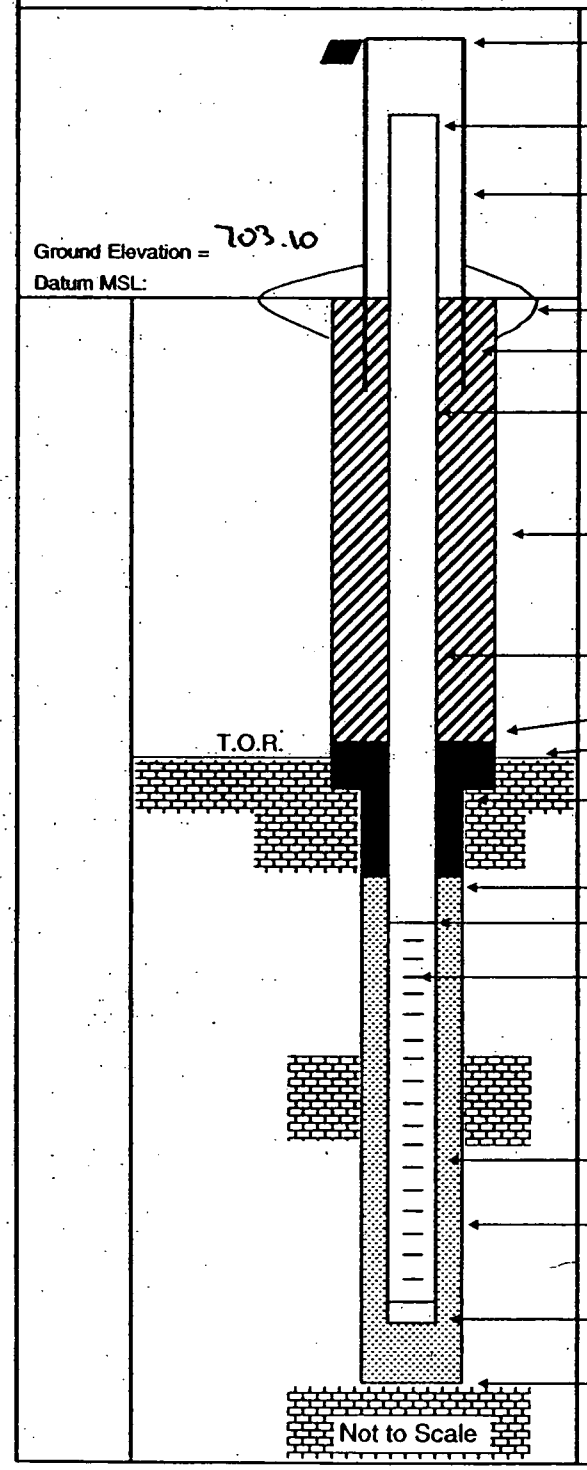

Elevation of Top of Casing: 706.32

Stick Up of Casing Above Ground Surface: 2.72'

Elevation of Top of Riser: 705.82

I.D. of Surface Casing: 4" SQUARE

Type of Surface Casing: STEEL

Type of Surface Seal: 4'x4'x6" PAD

I.D. of Permanent Casing: NA

I.D. of Riser: 2"

Type of Riser: PVC

Borehole Diameter: 6" to 5'
5" 5'-19'

Type of Backfill: CEMENT

Elevation / Depth Top of Seal: 701.1 / 2'

Elevation / Depth Top of Bedrock: 690.1 / 13'

Type of Seal: BENT-CHIPS

Elevation / Depth of Top of Filter Pack: 696.1 / 7'

Elevation / Depth of Top of Screen: 694.1 / 9'

Type of Screen: PVC

Slot Size x Length: .20 x 10'

I.D. of Screen: 2"

Type of Filter Pack: No. 20-40 SAND

Diameter of Hole in Bedrock:
Core / Ream: 5"

Elevation / Depth of Bottom of Screen: 684.1 / 19'

Elevation / Total Depth of Borehole: 684.1 / 19'

Tetra Tech NUS, Inc.

BORING LOG

PROJECT NAME: NSWC CRANE
PROJECT NUMBER: N9060 CTO 0279
DRILLING COMPANY: BOWSER MORNER
DRILLING RIG: ROTOSONIC

BORING NUMBER: 13MW120
DATE: 4/1/03
GEOLOGIST: BOB BALKOVEC
DRILLER: DAVES

Sample No. and Type or RQD	Depth (Ft.) or Run No.	Blows / 6" or RQD (%)	Sample Recovery / Sample Length	Lithology Change (Depth /Ft.) or Screened Interval	MATERIAL DESCRIPTION: Soil Density / Consistency or Rock Hardness	Color	Material Classification	USCS*	Remarks	PID/FID Reading (ppm): Sample	Sampler BZ	Borehole**	Driller BZ**
	1				TOPSOIL SOFT	BR	.5' TOP SOIL	ML		0.0			
	2				MOIST	YELL BR	.5'-6' CLAYEY SILT + SAND	ML/SC					
	3				MOIST	LT GRAY	(FILL)						
	4					GRAY			MOTTLED (3'-5')				
5-1 0817	5		4.7'/5'										
	6					YELL BR	CLAYEY SILT	ML		0.0			
	7			11'-11.5'	HARD	LT GRAY	6'-13.5' SILTSTONE	BR	THIN LAMINATION				
	8					DK GRAY							
	9												
5-2 0835	10		4.5'/5'				SHALEY 9'-10'						
	11						SILTSTONE 10'-13.5'			0.0			
	12												
	13												
	14				WET + SOFT								
5-3 0847	15		4.5'/5'		HARD +	BROWN	SANDSTONE 13.5'-15.5'	MS	WATER @ BOTTOM OF				
	16				DRY				HOLE 13.5' @ 0909	0.0			
	17				SOFT +	LT DK	15.5'-20' SILTY SHALE	BR					
	18				DRY	GRAY							
	19												
5-4 0934	20		5'/5'										
				T.D. 20'			WET SET @ 20' 2" PVC						
							SCREENED 10'-20'						
							SAND TO 8'						
							BENT TO 2'						

* When rock coring, enter rock brokeness.

** Include monitor reading in 6 foot intervals @ borehole. Increase reading frequency if elevated reponse read.

Remarks:

Drilling Area Background (ppm): 0.0

Converted to Well: Yes X No

Well I.D. #: 13MW120

Tetra Tech NUS, Inc.

BEDROCK MONITORING WELL SHEET

WELL No.: 13MW720

PERMIT No:

PROJECT:	NSWC CRANE	DRILLING Co.:	BOWSER MORNER	BORING No.:	13MW720
PROJECT No.:	9060 CTO 0279	DRILLER:	DAVE S.	DATE COMPLETED:	4/1/03
SITE:	SWMU 13	DRILLING METHOD:	ROTOSONIC	NORTHING:	1304066.757
GEOLOGIST:	B. BALKOVEC	DEV. METHOD:	WATTERRA	EASTING:	3023522.733

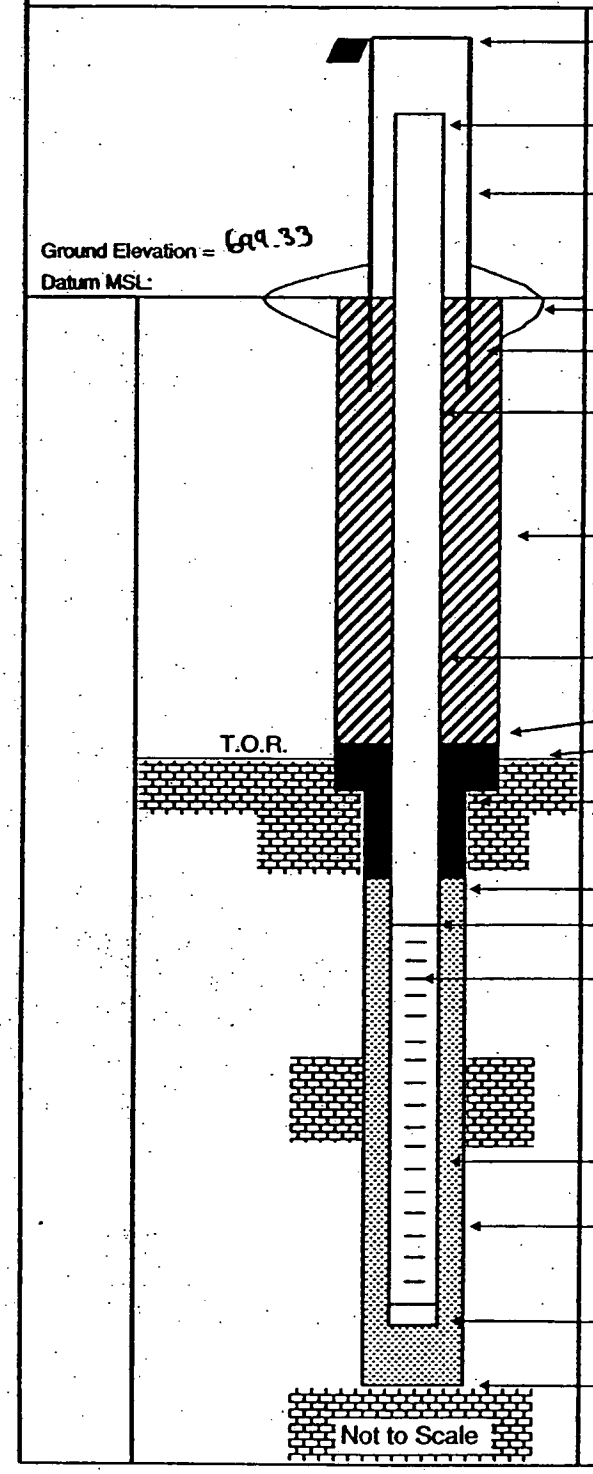

Elevation of Top of Casing: 702.65

Stick Up of Casing Above Ground Surface: 2.74

Elevation of Top of Riser: 702.07

I.D. of Surface Casing: 4" SQUARE

Type of Surface Casing: STEEL

Type of Surface Seal: 4'x4'x6" PAD

I.D. of Permanent Casing: NA

I.D. of Riser: 2"

Type of Riser: PVC

Borehole Diameter: 5"

Type of Backfill: CEMENT

Elevation / Depth Top of Seal: 697.33 / 2'

Elevation / Depth Top of Bedrock: 693.33 / 6'

Type of Seal: BENT. CHIPS

Elevation / Depth of Top of Filter Pack: 691.33 / 8'

Elevation / Depth of Top of Screen: 689.33 / 10'

Type of Screen: PVC

Slot Size x Length: .20 x 10'

I.D. of Screen: 2"

Type of Filter Pack: No. 20-40 SAND

Diameter of Hole in Bedrock:
Core / Ream: 5"

Elevation / Depth of Bottom of Screen: 679.33 / 20'

Elevation / Total Depth of Borehole: 679.33 / 20'

Tetra Tech NUS, Inc.

BORING LOG

PROJECT NAME: NSWC CRANE
PROJECT NUMBER: N9060 CTO 0279
DRILLING COMPANY: BOWSER MORNER
DRILLING RIG: ROTOSONIC

BORING NUMBER: 13MW721
DATE: 3/28/03
GEOLOGIST: BOB BALKOVEC
DRILLER: DAVES

Sample No. and Type or RQD	Depth (Ft.) or Run No.	Blows / 6" or RQD (%)	Sample Recovery / Sample Length	Lithology Change (Depth /Ft.) or Screened Interval	MATERIAL DESCRIPTION: Soil Density/ Consistency or Rock Hardness	Color	Material Classification	USCS*	Remarks	PID/FID Reading (ppm): Sample	Sampler BZ	Borehole**	Driller BZ**
	1					BR	SEE 13MW717 FOR		5" 0-15'				
							COMPLETE LITHOLOGY						
							SILTY MATERIAL						
1051	5												
						GRAY							
1100	10								HARD DRILLING				
							SILTY MATERIAL		@ 10'				
1105	15												
				T.D 15'			WELL SET @ 15' 2" PVC						
							SCREENED 5'-15'						
							SAND TO 4'						
							BENT 2'						

* When rock coring, enter rock brokeness.

** Include monitor reading in 6 foot intervals @ borehole. Increase reading frequency if elevated reponse read.

Remarks:

Drilling Area Background (ppm): 0.0

Converted to Well: Yes X No

Well I.D. #: 13MW721

Tetra Tech NUS, Inc.

BEDROCK
MONITORING WELL SHEET

WELL No.: 13MWT21

PERMIT No:

PROJECT:	NSWC CRANE	DRILLING Co.:	BOWSER MORNER	BORING No.:	13MWT21
PROJECT No.:	9060 CTO 0279	DRILLER:	DAVES.	DATE COMPLETED:	3/28/03
SITE:	SWMU 13	DRILLING METHOD:	ROTOSONIC	NORTHING:	1309391.009
GEOLOGIST:	B. BALKOVEC	DEV. METHOD:	WATTERRA	EASTING:	3022916.218

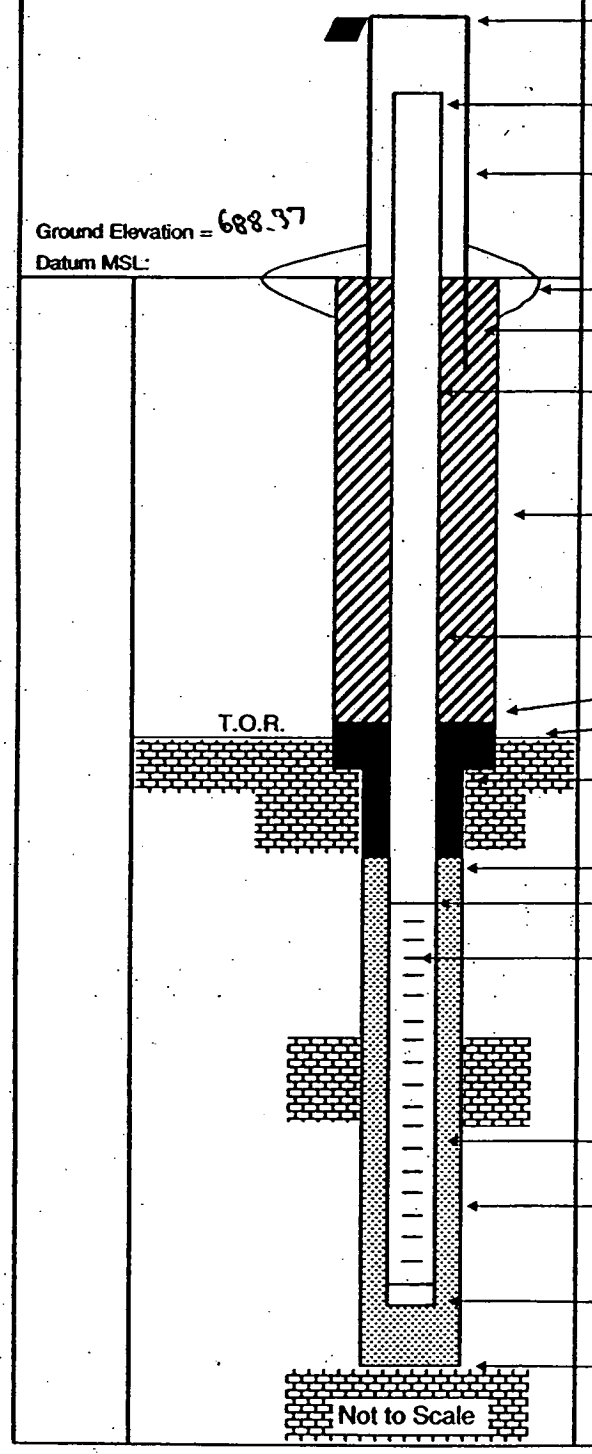

Elevation of Top of Casing: 691.26

Stick Up of Casing Above Ground Surface: 2.37

Elevation of Top of Riser: 690.74

I.D. of Surface Casing: 4" SQUARE

Type of Surface Casing: STEEL

Type of Surface Seal: 4'x4'x6" PAD

I.D. of Permanent Casing: NA

I.D. of Riser: 2"

Type of Riser: PVC

Borehole Diameter: 5"

Type of Backfill: CEMENT

Elevation / Depth Top of Seal: 686.37 / 2'

Elevation / Depth Top of Bedrock: 678.37 / 10'

Type of Seal: BENT. CHIPS

Elevation / Depth of Top of Filter Pack: 684.37 / 4'

Elevation / Depth of Top of Screen: 683.37 / 5'

Type of Screen: PVC

Slot Size x Length: .20 x 10'

I.D. of Screen: 2"

Type of Filter Pack: No. 20-40 SAND

Diameter of Hole in Bedrock:
Core / Ream: 5"

Elevation / Depth of Bottom of Screen: 673.37 / 15'

Elevation / Total Depth of Borehole: 673.37 / 15'

Tetra Tech NUS, Inc.

BORING LOG

PROJECT NAME: NSWC CRANE
PROJECT NUMBER: N9060 CTO 0279
DRILLING COMPANY: BOWSER MORNER
DRILLING RIG: ROTOSONIC

BORING NUMBER: BMW T22
DATE: 3/28/03
GEOLOGIST: BOB BALKOVEC
DRILLER: DAVE S.

Sample No. and Type or RQD	Depth (FL) or Run No.	Blows / 6" or RQD (%)	Sample Recovery / Sample Length	Lithology Change (Depth /FL) or Screened Interval	MATERIAL DESCRIPTION: Soil Density/ Consistency or Rock Hardness	Color	Material Classification	USCS*	Remarks	PID/FID Reading (ppm): Sample	Sample/BZ	Borehole**	Driller/BZ
	1					BR	.5' TOP SOIL	ML		0.0	0.0		
	2					YELL BR	CLAYEY SILT .5-3'						
	3					↓	↓						
	4					YELL BR	SANDY SILT 3'-5'		MOTTLED				
S-1 0919	5		5' / 5'			& GRAY	↓ Some WEATHERED RX	↓		↓			0.0
	6					↓	5-6' ↓	ML		0.0			
	7				SOFT &	YELL BR	6'-11' SILT STONE	BR	COAL TO THE				
	8				DRY	& GRAY	↓		TOUCH. PUSH				
	9				HARD &	LT GRAY			WATER @ 7'				
S-2 0919	10		4.9' / 5'		DRY	↓	↓			0.0			
	11					↓	SILT STONE			0.0			
	12					LT GRAY	11-15' S.S						
	13					↓							
	14					BR			WATER UP TO 14'				
S-3 0934	15		4.9' / 5'		↓	BLK	↓	↓	@ 15'18	↓	↓		0.0
				T.D. 15'			SET WELL @ 15' 2" PVC		6" TO 5' REAM				
							SCREENED 5'-15'		5'-15' (5")				
							SAND TO 4'						
							BEAD CHIPS TO 2'						

* When rock coring, enter rock brokeness.

** Include monitor reading in 6 foot intervals @ borehole. Increase reading frequency if elevated reponse read.

Remarks:

Drilling Area Background (ppm): 0.0

Converted to Well: Yes X No

Well I.D. #: BMW T22

Tetra Tech NUS, Inc.

BEDROCK MONITORING WELL SHEET

WELL No.: 13MW-122

PERMIT No:

PROJECT:	NSWC CRANE	DRILLING Co.:	BOWSER MORNER	BORING No.:	13MW122
PROJECT No.:	9060 CTO 0279	DRILLER:	DAVE S.	DATE COMPLETED:	3/28/03
SITE:	SWMU 13	DRILLING METHOD:	ROTOSONIC	NORTHING:	1308436.338
GEOLOGIST:	B. BALKOVEC	DEV. METHOD:	WATTERA	EASTING:	3022785.672

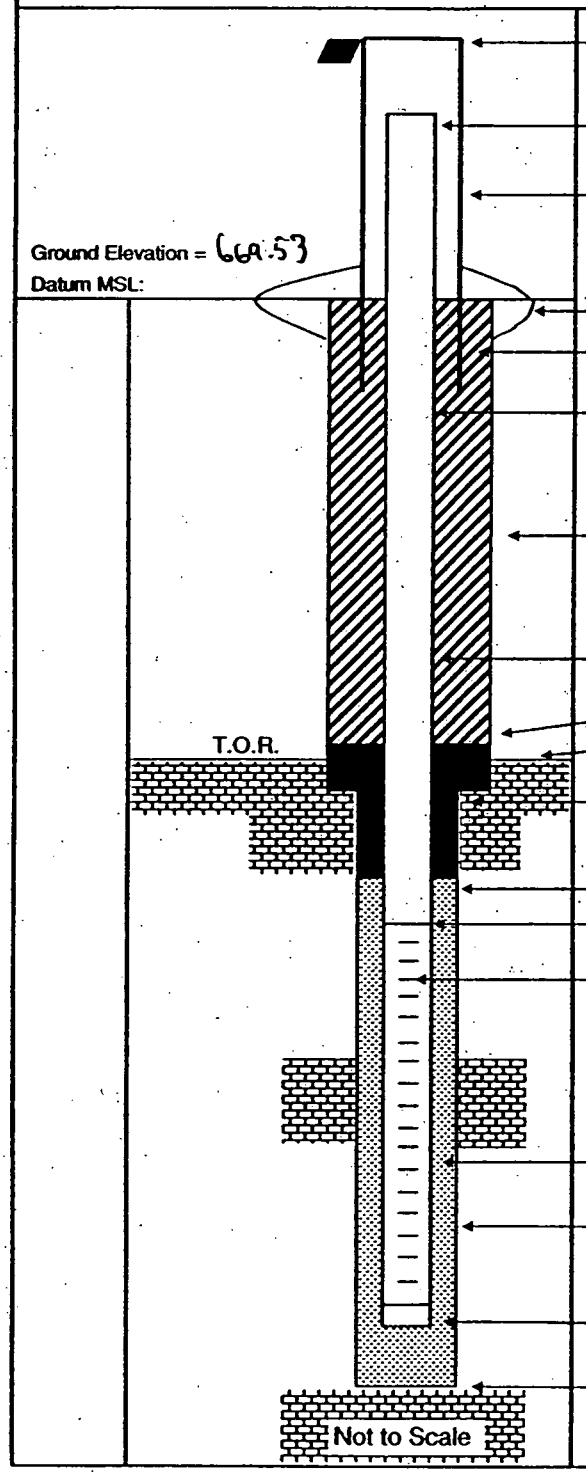

Elevation of Top of Casing: 672.38

Stick Up of Casing Above Ground Surface: 2.43

Elevation of Top of Riser: 671.96

I.D. of Surface Casing: 4" SQUARE

Type of Surface Casing: STEEL

Type of Surface Seal: 4'x4'x6" PAD

I.D. of Permanent Casing: NA

I.D. of Riser: 2"

Type of Riser: PVC

Borehole Diameter: 6" 0-5' / 5" 5'-15'

Type of Backfill: CEMENT

Elevation / Depth Top of Seal: 667.53 / 2'

Elevation / Depth Top of Bedrock: 663.53 / 6'

Type of Seal: BENT CHIPS

Elevation / Depth of Top of Filter Pack: 665.53 / 4'

Elevation / Depth of Top of Screen: 664.53 / 5'

Type of Screen: PVC

Slot Size x Length: .20 x 10'

I.D. of Screen: 2"

Type of Filter Pack: No. 20-40 SAND

Diameter of Hole in Bedrock: Core / Ream: 5"

Elevation / Depth of Bottom of Screen: 654.53 / 15'

Elevation / Total Depth of Borehole: 654.53 / 15'

Tetra Tech NUS, Inc.

BORING LOG

PROJECT NAME: NSWC CRANE
PROJECT NUMBER: N9060 CTO 0279
DRILLING COMPANY: BOWSER MORNER
DRILLING RIG: ROTOSONIC

BORING NUMBER: 13MW723
DATE: 4/1/03
GEOLOGIST: BOB BALKOVEC
DRILLER: DAVE S.

Sample No. and Type or RQD	Depth (Ft.) or Run No.	Blows / 6" or RQD (%)	Sample Recovery / Sample Length	Lithology Change (Depth /Ft.) or Screened Interval	MATERIAL DESCRIPTION: Soil Density/ Consistency or Rock Hardness	Color	Material Classification	USCS*	Remarks	PID/FID Reading (ppm): Sample*	Sampler BZ	Borehole**	Driller BZ**
	1				DAMP	BR	TOP .5' TOP SOIL	ML		0.0			
	2				MOIST	BR	.5'-5.5' CLAYEY SILT						
	3				M.STIFF								
	4					LT GRAY			MOTTLED (3'-5')				
S-1 1225	5		4.5'/5'										
	6					BR	CLAYEY SILT	ML		0.0			
	7				MOIST M.STIFF	YELL	5.5'-10.5' SANDY SILT						
	8					BR							
	9					LT GRAY							
S-2 1233	10		5'/5'						WET SAND SEAM @ 10'				
	11				DAMP M.STIFF		SANDY SILT	ML	BLOCK @ 10.5'	0.0			
	12					DK GRAY	SILTSTONE 10.5'-13.2'	RX	THIN LAM.				
	13												
	14					LT GRAY	13.2'-25' SILTSTONE W/SS						
S-3 1242	15		4.5'/5'			LT GRAY	SEAMS 2 1" THICK						
	16			▼?			SILTSTONE W/SS						
	17			STATIC		BR	SANDSTONE		POSS WATER @ 1'				
	18					LT. GRAY							
	19												
S-4 1252	20		4.5'/5'										
	21				WET								
S-5 1312	22		1.5'/2'										
				T.D. 22'			WELL SET @ 21.5' 2" PVC		.5' OF SAND FELL				
							SCREENED 11.5'-21.5'		BACK TO.				
							SAND TO 9.5' BENT TO 2'						

* When rock coring, enter rock brokeness.

** Include monitor reading in 6 foot intervals @ borehole. Increase reading frequency if elevated reponse read.

Remarks: 5" TO 22'

Drilling Area Background (ppm): 0.0

Converted to Well: Yes X No ____ Well I.D. #: 13MW723

Tetra Tech NUS, Inc.

BEDROCK MONITORING WELL SHEET

WELL No.: BMW723

PERMIT No:

PROJECT:	NSWC CRANE	DRILLING Co.:	BOWSER MORNER	BORING No.:	BMW723
PROJECT No.:	9060 CTO 0279	DRILLER:	DAVES.	DATE COMPLETED:	4/1/03
SITE:	SWMU 13	DRILLING METHOD:	ROTOSONIC	NORTHING:	1308708.016
GEOLOGIST:	B. BALKOVEC	DEV. METHOD:	WATTERA	EASTING:	3023745.117

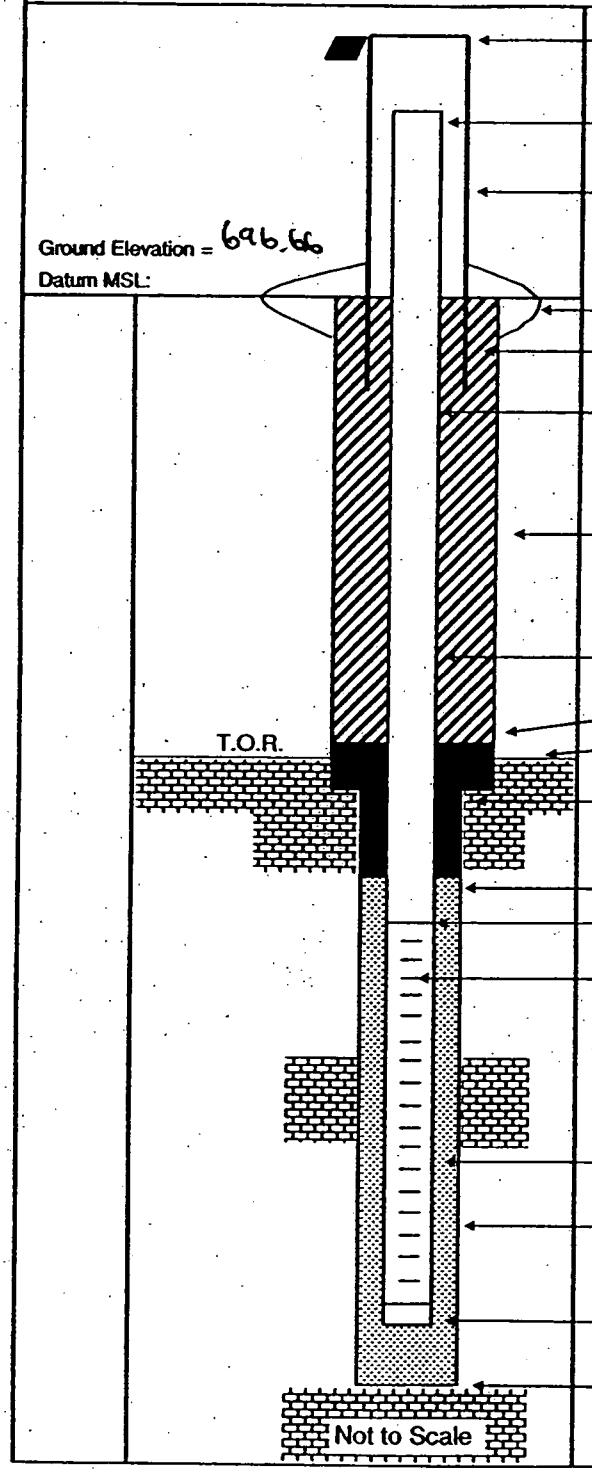

Elevation of Top of Casing: 699.69

Stick Up of Casing Above Ground Surface: 2.48

Elevation of Top of Riser: 699.14

I.D. of Surface Casing: 4" SQUARE

Type of Surface Casing: STEEL

Type of Surface Seal: 4'x4'x6" PAD

I.D. of Permanent Casing: NA

I.D. of Riser: 2"

Type of Riser: PVC

Borehole Diameter: 5"

Type of Backfill: VOL CLAY (2-7.5')

Elevation / Depth Top of Seal: 689.16 / 7.5'

Elevation / Depth Top of Bedrock: 685.86 / 10.5'

Type of Seal: BENT. CHIPS

Elevation / Depth of Top of Filter Pack: 687.16 / 9.5'

Elevation / Depth of Top of Screen: 685.16 / 11.5'

Type of Screen: PVC

Slot Size x Length: .20 x 10'

I.D. of Screen: 2"

Type of Filter Pack: No. 20-40 SAND

Diameter of Hole in Bedrock:

Core / Ream: 5"

Elevation / Depth of Bottom of Screen: 675.16 / 21.5'

Elevation / Total Depth of Borehole: 674.66 / 22.0'

Tetra Tech NUS, Inc.

BORING LOG

PROJECT NAME: NSWC CRANE
PROJECT NUMBER: N9060 CTO 0279
DRILLING COMPANY: BOWSER MORNER
DRILLING RIG: ROTOSONIC

BORING NUMBER: 13MW724
DATE: 4/1/03
GEOLOGIST: BOB BALKOVEC
DRILLER: DAVE S.

Sample No. and Type or RQD	Depth (Ft.) or Run No.	Blows / 6" or RQD (%)	Sample Recovery / Sample Length	Lithology Change (Depth /Ft.) or Screened Interval	MATERIAL DESCRIPTION: Soil Density/ Consistency or Rock Hardness	Color	Material Classification	USCS*	Remarks	PID/FID Reading (ppm): Sample	Sampler BZ	Borehole**	Driller BZ**
	1					YELL OR	SEE BORING LOG 13MW721 + 13MW723 FOR COMPLETE LITHOLOGIC DETAILS	ML	LOGGED SOIL CUTTINGS				
							5" REAM 0-22'						
	5						-SILTY CUTTINGS						
						YELL OR							
	10												
						GRAY	SILTY MATERIAL	ML	ROCK @ 10'				
							SILTSTONE?		HARDER TO				
									REAM. SLOWER				
									PROGRESS				
	15												
	20												
						GRAY			FLUSHED OUT				
	22								HOLE. WATER				
				TD 22'			WELL SET @ 22' 2" PVC		@ 19.0'				
							SCREENED 12'-22'						
							SAND TO 10'						
							BENT TO 8' VOLCLAY TO 2'						

* When rock coring, enter rock brokeness.
** Include monitor reading in 6 foot intervals @ borehole. Increase reading frequency if elevated reponse read.

Remarks: 5" REAM 0-22'

Drilling Area Background (ppm): –

Converted to Well: Yes X No ___ Well I.D. #: 13MW724

Tetra Tech NUS, Inc.

BEDROCK MONITORING WELL SHEET

WELL No.: 13MW724

PERMIT No:

PROJECT:	NSWC CRANE	DRILLING Co.:	BOWSER MORNER	BORING No.:	13MW724
PROJECT No.:	9060 CTO 0279	DRILLER:	DAVES.	DATE COMPLETED:	4/1/03
SITE:	SWMU 13	DRILLING METHOD:	ROTOSONIC	NORTHING:	1308397.230
GEOLOGIST:	B. BALKOVEC	DEV. METHOD:	WATTERA	EASTING:	302296.484

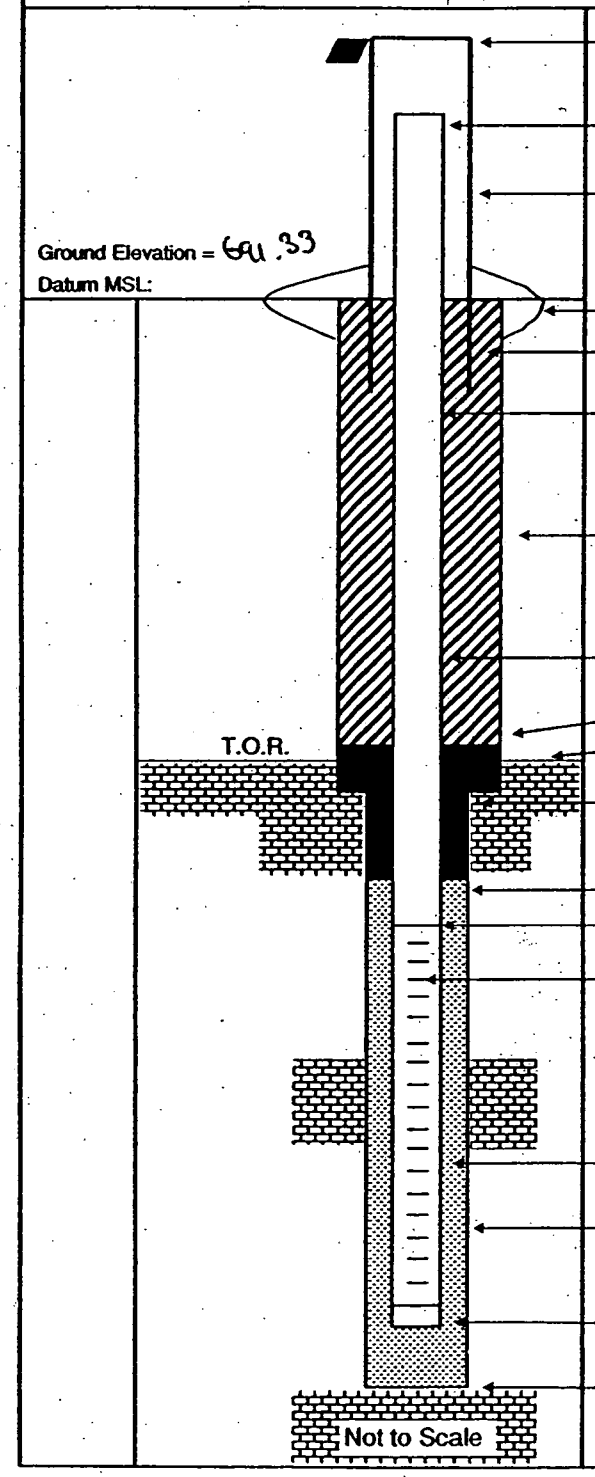

Elevation of Top of Casing: 694.39

Stick Up of Casing Above Ground Surface: 2.6

Elevation of Top of Riser: 693.93

I.D. of Surface Casing: 4" SQUARE

Type of Surface Casing: STEEL

Type of Surface Seal: 4'x4'x6" PAD

I.D. of Permanent Casing: NA

I.D. of Riser: 2"

Type of Riser: PVC

Borehole Diameter: 5"

Type of Backfill: VOL CLAY (2'-8')

Elevation / Depth Top of Seal: 683.33 / 8'

Elevation / Depth Top of Bedrock: 680.33 / 11'

Type of Seal: BENT. CHIPS

Elevation / Depth of Top of Filter Pack: 681.33 / 10'

Elevation / Depth of Top of Screen: 679.33 / 12'

Type of Screen: PVC

Slot Size x Length: .20 x 10'

I.D. of Screen: 2"

Type of Filter Pack: No. 20-40 SAND

Diameter of Hole in Bedrock: 5"

Core / Ream.

Elevation / Depth of Bottom of Screen: 669.33 / 22'

Elevation / Total Depth of Borehole: 669.33 / 22'

Tetra Tech NUS, Inc.

BORING LOG

PROJECT NAME: NSWC CRANE
PROJECT NUMBER: N9060 CTO 0279
DRILLING COMPANY: BOWSER MORNER
DRILLING RIG: ROTOSONIC

BORING NUMBER: BMW T25
DATE: 3/28/03
GEOLOGIST: BOB BALKOVEC
DRILLER: DAVE S.

Sample No. and Type or RQD	Depth (Ft.) or Run No.	Blows / 6" or RQD (%)	Sample Recovery / Sample Length	Lithology Change (Depth /Ft.) or Screened Interval	MATERIAL DESCRIPTION: Soil Density/ Consistency or Rock Hardness	Color	Material Classification	USCS *	Remarks	PID/FID Reading (ppm): Sample	Sampler BZ	Borehole**	Driller BZ**
	1					GR	TOP 5' TOPSOIL	ML		0.0			
	2					LT	5'-4' SILTY CLAY W/	CL					
	3					BR	F-C SAND						
	4												
S4 1302	5		4.5' / 5'			YELLOW BROWN	SANDY SILT W/ T-CLAY	ML	MOTTLED				
	6				MOIST +		CLAYEY SILT			0.0			
	7				STIFF		4-8'						
	8				SOFT + WET				WET 8'				
	9				STIFF + DRY	YELLOW BROWN	SAND & SILT 8-9'	ML	WEATHERED RK				
S-2 1310	10		4.9' / 5'		DRY + SOFT	LT GRAY	SILTSTONE 9-15'	RK	BLACK CLAY LAYER @ 9' x 2" WIDE				
	11									0.0			
	12												
	13												
S-3 1323	14		4 / 4'						REFUSAL @ 14'				
	15						5" REAM TO 15'		RIM 5" TO 15'				
				T.D. 15									
							SET WELL @ 15' 2" PVC						
							SCREENED FROM 5'-15'						
							SAND TO 4'						
							BENT CHIPS TO 2'						

* When rock coring, enter rock brokeness.

** Include monitor reading in 6 foot intervals @ borehole. Increase reading frequency if elevated reponse read.

Remarks: SAMPLED 0-14' 1' OF REAM.

Drilling Area Background (ppm): 0.0

Converted to Well: Yes X No _____ Well I.D. #: BMW T25

Tetra Tech NUS, Inc.

BEDROCK MONITORING WELL SHEET

WELL No.: BMW725

PERMIT No:

PROJECT:	NSWC CRANE	DRILLING Co.:	BOWSER MORNER	BORING No.:	BMW725
PROJECT No.:	9060 CTO 0279	DRILLER:	DAVE S.	DATE COMPLETED:	7/28/03
SITE:	SWMU 13	DRILLING METHOD:	ROTOSONIC	NORTHING:	1308625.618
GEOLOGIST:	B. BALKOVEC	DEV. METHOD:	WATTERA	EASTING:	3022677.444

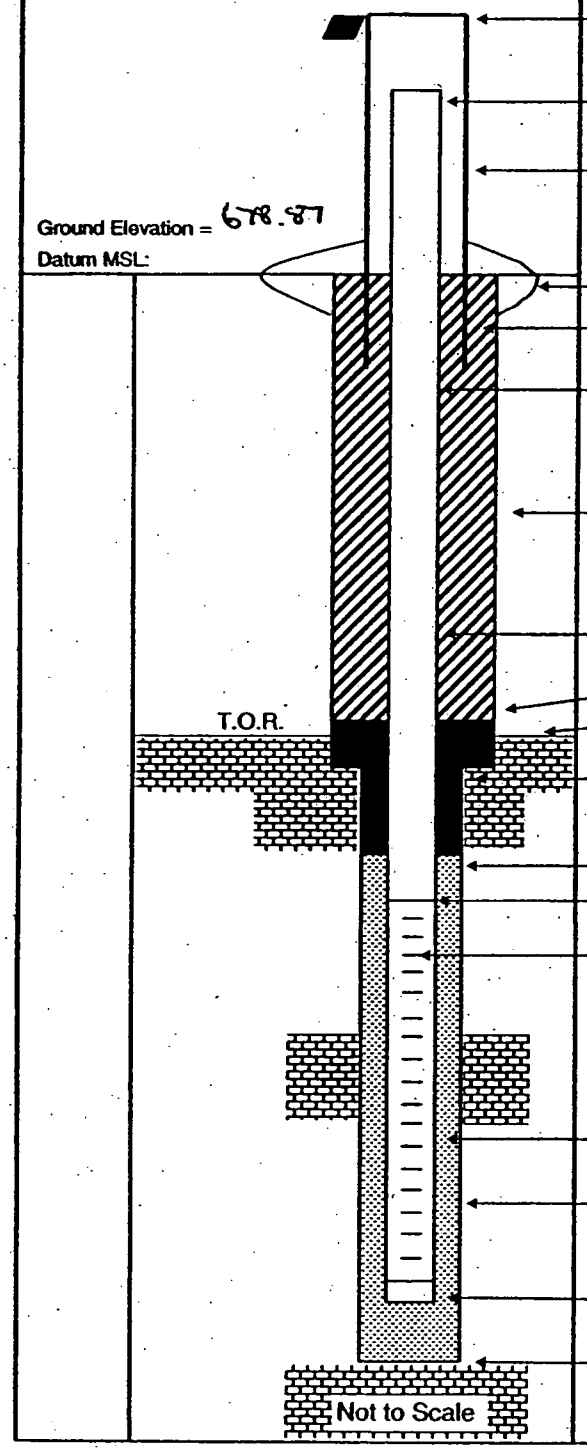

Elevation of Top of Casing: 682.00

Stick Up of Casing Above Ground Surface: 2.70

Elevation of Top of Riser: 681.57

I.D. of Surface Casing: 4" SQUARE

Type of Surface Casing: STEEL

Type of Surface Seal: 4'x4'x6" PAD

I.D. of Permanent Casing: NA

I.D. of Riser: 2"

Type of Riser: PVC

Borehole Diameter: 5"

Type of Backfill: CEMENT

Elevation / Depth Top of Seal: 676.87 / 2'

Elevation / Depth Top of Bedrock: 669.87 / 9'

Type of Seal: BENT. CHIPS

Elevation / Depth of Top of Filter Pack: 674.87 / 4'

Elevation / Depth of Top of Screen: 673.87 / 5'

Type of Screen: PVC

Slot Size x Length: .20 x 10'

I.D. of Screen: 2"

Type of Filter Pack: No. 20-40 SAND

Diameter of Hole in Bedrock:
Core / Ream: 5"

Elevation / Depth of Bottom of Screen: 663.87 / 15'

Elevation / Total Depth of Borehole: 663.87 / 15'

Tetra Tech NUS, Inc.

BORING LOG

PROJECT NAME: NSWC CRANE
PROJECT NUMBER: N9060 CTO 0279
DRILLING COMPANY: BOWSER MORNER
DRILLING RIG: ROTOSONIC

BORING NUMBER: B7MWT26
DATE: 3/28/03
GEOLOGIST: BOB BALKOVEC
DRILLER: DAVE S.

Sample No. and Type or RQD	Depth (FL) or Run No.	Blows / 6" or RQD (%)	Sample Recovery / Sample Length	Lithology Change (Depth /FL) or Screened Interval	Soil Density/ Consistency or Rock Hardness	Color	Material Classification	USCS*	Remarks	PID/FID Reading (ppm) Sample	Sampler BZ	Borehole**	Driller BZ**
	1				MOIST	BR	TOP .5 TOP SOIL	ML		0.0	0.0		
	2				M STIFF		.5'-6.5' SANDY SILT						
	3												
	4												
S1 1452	5		4.7 / 5'									0.0	0.0
	6					BR	SANDY SILT			0.0			
	7					YELL BR	6.5'-8.5' SANDY SILT W/ SOME						
	8					GRAY	CLAY & S.S. FRAGS		SOME MOISTURE				
	9								@ 8' NOT				
S2 1456	10		5 / 5'				MOIST @ 10'		MUCH				
	11			?			CASING PLUGGED UP						
	12						SANDY SILT W/ SOME						
	13		@				CLAY & SS FRAGS						
	14			?		LT GRAY	13.5'-17' SANDSTONE		S.S. @ 13.5'				
S3 1524	15		2' / 5'						DRILLER OBSERV.				
	16				HARD	BR		MS	SET 6" TO 10'				
	17		@1543										
CH	18		40%		SOFT +	LT. OR	ALTERNATING BEDS OF	VBR	CLAYEY 17'-19'				
	19		RQD		HARD.	GRAY	SANDSTONE & SILTSTONE						
	20		5' / 5'		SOFT	LT GRAY	1' SANDSTONE BRITTLE						
				T.D. 20'			WELL SET @ 20' 2" PVC						
							SCREENED 6'-20'						
							SAND TO 8'						
							BEAD CHIPS TO 3'						
							NO VOL CLAY.						

* When rock coring, enter rock brokeness.

** Include monitor reading in 6 foot intervals @ borehole. Increase reading frequency if elevated reponse read.

Remarks: DRY @ 15' AFTER REAMING. WET @ 19' AFTER BLOW OUT

Drilling Area Background (ppm): 0.0

Converted to Well: Yes X No ____ Well I.D. #: B7MWT26

Tetra Tech NUS, Inc.

BEDROCK
MONITORING WELL SHEET

WELL No.: 13MW726

PERMIT No:

PROJECT:	NSWC CRANE	DRILLING Co.:	BOWSER MORNER	BORING No.:	13MW726
PROJECT No.:	9060 CTO 0279	DRILLER:	DAVE S.	DATE COMPLETED:	3/28/03
SITE:	SWMU 13	DRILLING METHOD:	ROTOSONIC	NORTHING:	1308232.686
GEOLOGIST:	B. BALKOVEC	DEV. METHOD:	WHALE	EASTING:	3022690.142

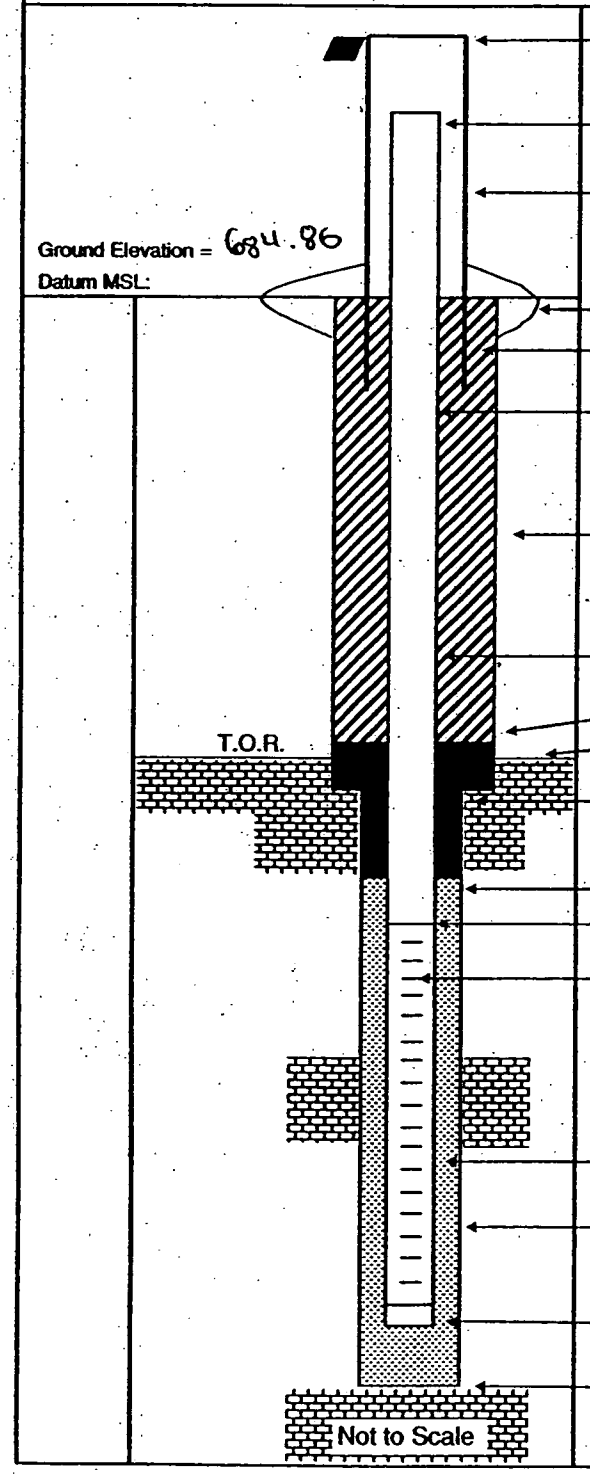

Elevation of Top of Casing: 687.42

Stick Up of Casing Above Ground Surface: 2.63'

Elevation of Top of Riser: 687.49

I.D. of Surface Casing: 4" SQUARE

Type of Surface Casing: STEEL

Type of Surface Seal: 4'x4'x6" PAD

I.D. of Permanent Casing: NA

I.D. of Riser: 2"

Type of Riser: PVC

Borehole Diameter: 6" 0-10' / 5" 10-20'

Type of Backfill: CEMENT

Elevation / Depth Top of Seal: 681.86 / 3'

Elevation / Depth Top of Bedrock: 672.36 / 12.5

Type of Seal: BENT. CHIPS

Elevation / Depth of Top of Filter Pack: 676.86 / 8'

Elevation / Depth of Top of Screen: 674.86 / 10'

Type of Screen: PVC

Slot Size x Length: .20 x 10'

I.D. of Screen: 2"

Type of Filter Pack: No. 20-40 SAND

Diameter of Hole in Bedrock: Core / Ream: 5"

Elevation / Depth of Bottom of Screen: 664.86 / 20'

Elevation / Total Depth of Borehole: 664.86 / 20'

Tetra Tech NUS, Inc.

BORING LOG

PROJECT NAME: NSWC CRANE
PROJECT NUMBER: N9060 CTO 0279
DRILLING COMPANY: BOWSER MORNER
DRILLING RIG: GEOPROBE 54 LT

BORING NUMBER: 73 SB 01
DATE: 3-25-03
GEOLOGIST: M. G. COCHRAN
DRILLER: J. AKERS

Sample No. and Type or RQD	Depth (Ft.) or Run No.	Blows / 6" or RQD (%)	Sample Recovery / Sample Length	Lithology Change (Depth /Ft.) or Screened Interval	MATERIAL DESCRIPTION: Soil Density/ Consistency or Rock Hardness	Color	Material Classification	USCS*	Remarks	PID/FID Reading (ppm): Background	Sample	Sample	Drilling Area
0	1		2.3/		—	GR-BRN	SANDY SILT	SM	MOIST	3.6	3.6	3.6	3.6
	2		4.0						FE STAINED	↓	↓	↓	↓
	3								FILL				
4	4								MORE FE				
	5						TD 4.0'		BTM. BTM DAMP				
	6												
	7												
	8												
	9												
	10												
	11												
	12												
	13												
	14												
	15												
						SAMPLED	1355010002						
						@	1240						
						SAMPLED	135B010204						
						@	1245						

* When rock coring, enter rock brokeness.

** Include monitor reading in 6 foot intervals @ borehole. Increase reading frequency if elevated reponse read.

Remarks: DPT W/ MACRO CORE

Drilling Area Background (ppm): 3.6

Converted to Well: Yes ____ No ✓ Well I.D. #: —

Tetra Tech NUS, Inc.

BORING LOG

PROJECT NAME: NSWC CRANE
PROJECT NUMBER: N9060 CTO 0279
DRILLING COMPANY: BOWSER MORNER
DRILLING RIG: GEOPROBE 54 LT

BORING NUMBER: T3SB02
DATE: 3-25-03
GEOLOGIST: M. G. COCHRAN
DRILLER: J. AKERS

Sample No. and Type or RQD	Depth (Ft.) or Run No.	Blows / 6" or RQD (%)	Sample Recovery / Sample Length	Lithology Change (Depth /Ft.) or Screened Interval	MATERIAL DESCRIPTION: Soil Density/ Consistency or Rock Hardness	Color	Material Classification	USCS*	Remarks	PID/FID Reading (ppm): Sample	Barrel**	Bottom**	Drillhole**
0	1		2.5/		—	GR BRN	SANDY SILT	SM	MOIST	2.1	2.1	2.1	2.1
	2		4.0						FE STAINED	↓	↓	↓	↓
	3								FILL				
4	4								DAMP @ BTM				
	5						TD 4.0						
	6												
	7												
	8												
	9												
	10												
	11												
	12												
	13												
	14												
	15												
						SAMPLED	135S020002						
						@	1255						
						SAMPLED	135B020204						
						@	1300						

* When rock coring, enter rock brokeness.

** Include monitor reading in 6 foot intervals @ borehole. Increase reading frequency if elevated reponse read.

Remarks: DPT W/ MACRO CORE

Drilling Area Background (ppm): 2.1

Converted to Well: Yes _____ No ✓ Well I.D. #: _____

Tetra Tech NUS, Inc.

BORING LOG

PROJECT NAME: NSWC CRANE
PROJECT NUMBER: N9060 CTO 0279
DRILLING COMPANY: BOWSER MORNER
DRILLING RIG: GEOPROBE 54 LT

BORING NUMBER: 13SB03
DATE: 3-25-03
GEOLOGIST: M. G. COCHRAN
DRILLER: J. AKERS

Sample No. and Type or RQD	Depth (Ft.) or Run No.	Blows / 6" or RQD (%)	Sample Recovery / Sample Length	Lithology Change (Depth /Ft.) or Screened Interval	MATERIAL DESCRIPTION: Soil Density/ Consistency or Rock Hardness	Color	Material Classification	USCS *	Remarks	PID/FID Reading (ppm): Sample	Sample BZ	Background	Drilling BZ
	1		2.8/			GR BRN	SANDY SILT	SM	moist @ TOP	1.8	1.8	1.8	1.8
	2		4.0						FILL	↓	↓	↓	↓
	3								DAMP @ BTM				
	4								Fe STAINED @				
	5						TD 4.0		HARD @ BTM BTM				
	6												
	7												
	8												
	9												
	10												
	11												
	12												
	13												
	14												
	15												
						SAMPLED 13SS030002							
						@ 1310							
						SAMPLED 13SB030204							
						@ 1315							

* When rock coring, enter rock brokeness.

** Include monitor reading in 6 foot intervals @ borehole. Increase reading frequency if elevated reponse read.

Remarks: DPT W/ MACRO CORE

Drilling Area Background (ppm): 1.8

Converted to Well: Yes ____ No ✓ Well I.D. #: —

Tetra Tech NUS, Inc.

BORING LOG

PROJECT NAME: NSWC CRANE
PROJECT NUMBER: N9060 CTO 0279
DRILLING COMPANY: BOWSER MORNER
DRILLING RIG: GEOPROBE 54LT
BORING NUMBER: T3SB04
DATE: 3-25-03
GEOLOGIST: M.G. COCHRAN
DRILLER: J. AKERS

Sample No. and Type or RQD	Depth (Ft.) or Run No.	Blows / 6" or RQD (%)	Sample Recovery / Sample Length	Lithology Change (Depth /Ft.) or Screened Interval	MATERIAL DESCRIPTION: Soil Density/ Consistency or Rock Hardness	Color	Material Classification	USCS*	Remarks	PID/FID Reading (ppm): Sample	Sample BZ	BG Sample	Drill BZ
	1		1.8/			GR BRN	SANDY SILT	SM	MOIST @ TOP	22	22	22	22
	2		4.0							↓	↓	↓	↓
	3								FILL				
	4								FE STAINED @ BTM				
	5						TD 4.0		DAMP @ BTM				
	6												
	7												
	8												
	9												
	10												
	11												
	12												
	13												
	14												
	15												
						SAMPLED 13SB040002							
						@ 1415							
						SAMPLED 13SB040204							
						@ 1420							

* When rock coring, enter rock brokeness.

** Include monitor reading in 6 foot intervals @ borehole. Increase reading frequency if elevated reponse read.

Remarks: DPT W/ MACRO CORE

Drilling Area Background (ppm): 2.2

Converted to Well: Yes ____ No ✓ Well I.D. #: —

Tetra Tech NUS, Inc.

BORING LOG

PROJECT NAME: NSWC CRANE
PROJECT NUMBER: N9060 CTO 0279
DRILLING COMPANY: BOWSER MORNER
DRILLING RIG: GEOPROBE 54 LT

BORING NUMBER: 73 SB05
DATE: 3-25-03
GEOLOGIST: M. G. COCHRAN
DRILLER: J. AKERS

Sample No. and Type or RQD	Depth (Ft.) or Run No.	Blows / 6" or RQD (%)	Sample Recovery / Sample Length	Lithology Change (Depth /Ft.) or Screened Interval	MATERIAL DESCRIPTION: Soil Density/ Consistency or Rock Hardness	Color	Material Classification	USCS*	Remarks	PID/FID Reading (ppm): Breathing Zone	Background	Borehole	Drill Rig
	1		1.2/			GR BRN	SANDY SILT	SM	SAT @ TOP	1.8	1.8	1.8	1.8
	2		4.0							↓	↓	↓	↓
	3								FILL				
	4								DAMP @ BTM FE STAINED				
	5						TD 4.0						
	6												
	7												
	8												
	9												
	10												
	11												
	12												
	13												
	14												
	15												
						SAMPLED	13SS050002						
						@	1350						
						SAMPLED	13SB050204						
						@	1355						

* When rock coring, enter rock brokeness.

** Include monitor reading in 6 foot intervals @ borehole. Increase reading frequency if elevated reponse read.

Remarks: DPT W/ MACRO CORE

Drilling Area Background (ppm): 1.8

Converted to Well: Yes ____ No ✓ Well I.D. #: —

Tetra Tech NUS, Inc.

BORING LOG

PROJECT NAME: NSWC CRANE
PROJECT NUMBER: N9060 CTO 0279
DRILLING COMPANY: BOWSER MORNER
DRILLING RIG: GEOPROBE 54 LT

BORING NUMBER: 13SB06
DATE: 3-25-03
GEOLOGIST: M.G. COCHRAN
DRILLER: J. AKER

Sample No. and Type or RQD	Depth (Ft.) or Run No.	Blows / 6" or RQD (%)	Sample Recovery / Sample Length	Lithology Change (Depth /Ft.) or Screened Interval	MATERIAL DESCRIPTION: Soil Density / Consistency or Rock Hardness	Color	Material Classification	USCS *	Remarks	PID/FID Reading (ppm): Sample	Bumper BZ	Bore Hole	Driller BZ
0	1		2.5/			GR. BRN	SILTY SAND	SM	MOIST @ TOP	1.9	1.9	1.9	1.9
	2		4.0						FILL				
	3												
4	4								DAMP @ BTM F.E STAINED				
	5						TD 4.0						
	6												
	7												
	8												
	9												
	10												
	11												
	12												
	13												
	14												
	15												
						SAMPLED 13SS060002							
						@ 1330							
						SAMPLED 13SB060204							
						@ 1335							

* When rock coring, enter rock brokeness.

** Include monitor reading in 6 foot intervals @ borehole. Increase reading frequency if elevated reponse read.

Remarks: DPT W/ MACRO CORE

Drilling Area Background (ppm): 1.9

Converted to Well: Yes ____ No ✓ Well I.D. #: —

Tetra Tech NUS, Inc.

BORING LOG

PROJECT NAME: NSWC CRANE
PROJECT NUMBER: N9060 CTO 0279
DRILLING COMPANY: BOWSER MORNER
DRILLING RIG: GEOPROBE 54 LT

BORING NUMBER: 13 SB07
DATE: 3-26-03
GEOLOGIST: M G COCHRAN
DRILLER: J. AKERS

Sample No. and Type or RQD	Depth (Ft.) or Run No.	Blows / 6" or RQD (%)	Sample Recovery / Sample Length	Lithology Change (Depth /Ft.) or Screened Interval	MATERIAL DESCRIPTION: Soil Density/ Consistency or Rock Hardness	Color	Material Classification	USCS*	Remarks	PID/FID Reading (ppm): Sample	Bore Hole	Bore Hole	Cell Bkgd
0	1		3.8/			DK BRN	TOPSOIL - .5' SILT, LITTLE	SM	DAMP	1.7	1.7	1.7	1.7
	2		4.0				SAND		FILL - 5.5'?	↓	↓	↓	↓
	3												
4	4												
	5		3.3/						SATURATED				
	6		4.0						S.S. FRAG				
	7			5.5		RD BRN	SILT, [illegible]		GREY MOTTLING	1.7	1.7	1.7	1.7
8	8								DAMP				
	9												
	10								WEATHERED RK				
11	11						REFUSAL @ 11'		SHALY @ BTM				
	12												
	13												
	14												
	15												
						SAMPLED	13SS070002						
						@	1320						
						SAMPLED	13SB070810						
						@	1330						

* When rock coring, enter rock brokeness.

** Include monitor reading in 6 foot intervals @ borehole. Increase reading frequency if elevated reponse read.

Remarks: GEOPROBE MACRO CORE
HOLE BACK FILLED W/ HOLEPLUG

Drilling Area Background (ppm): 1.7

Converted to Well: Yes ____ No ✓ Well I.D. #: ____

Tetra Tech NUS, Inc.

BORING LOG

PROJECT NAME: NSWC CRANE
PROJECT NUMBER: N9060 CTO 0279
DRILLING COMPANY: BOWSER MORNER
DRILLING RIG: ROTOSONIC

BORING NUMBER: BMW T08 / SB08
DATE: 3/31/03
GEOLOGIST: BOB BALKOVEC
DRILLER: DAVE S.

Sample No. and Type or RQD	Depth (Ft.) or Run No.	Blows / 6" or RQD (%)	Sample Recovery / Sample Length	Lithology Change (Depth /Ft.) or Screened Interval	MATERIAL DESCRIPTION: Soil Density/ Consistency or Rock Hardness*	Color	Material Classification**	USCS*	Remarks	PID/FID Reading (ppm): sampler	sampler BZ	Borehole**	Driller BZ
	1				MOIST & SOFT	BR	TOP 5' TOP SOIL	ML		0.0			
	2				DRY &	YELL BR	CLAYEY SILT		0-2 @ 0745				
	3				MOIST	GRAY	(MOTTLED)		DUP F0031003 04				
	4												
3-1 0943	5		4.5' / 5'										
	6					BR	5-6.5' CLAYEY SILT W/ S.S. PEBBLES	ML		0.0			
	7					YELL BR	6.5-8' CLAYEY SILT		6.5' @ 0800				
	8			8			(MOTTLED)		MOIST				
	9				SOFT &	LT GRAY	SILTSTONE	MX	POSS. WATER @ 8'				
3-2 1154	10		4.9' / 5'		DRY			BR					
	11				HARD	YELL BR	SANDSTONE 10-10.5'			0.0			
	12				HARD &	LT GRAY	10.5'-13.5' SILTSTONE						
	13				DRY	YELL BR	(MOTTLED)		MOISTURE ALONG				
	14				HARD &	LT/DK	THIN LAMINATED SILTSTONE		SIDE WALLS				
3-3 0810	15		5' / 5'		DRY	GRAY	13.5-15'		6" TO 5' 5" REAM				
				TD 15'			WELL SET @ 15'		5-15'				
							SCREENED 5'-15'		DRILLER CASING				
							SAND TO 4'		WATER				
							BENT TO 2'		WELL 9 1/2" DIA				
									AFTER BLOWOUT				

* When rock coring, enter rock brokeness.

** Include monitor reading in 6 foot intervals @ borehole. Increase reading frequency if elevated reponse read.

Remarks:

Drilling Area Background (ppm): 0.0

Converted to Well: Yes X No

Well I.D. #: BMW T08

Tetra Tech NUS, Inc.

BORING LOG

PROJECT NAME: NSWC CRANE
PROJECT NUMBER: N9060 CTO 0279
DRILLING COMPANY: BOWSER MORNER
DRILLING RIG: GEOPROBE 54 LT

BORING NUMBER: 13SB09/15
DATE: 3-26-03
GEOLOGIST: M.G COCHRAN
DRILLER: J AKERS

Sample No. and Type or RQD	Depth (Ft.) or Run No.	Blows / 6" or RQD (%)	Sample Recovery / Sample Length	Lithology Change (Depth /Ft.) or Screened Interval	MATERIAL DESCRIPTION: Soil Density/ Consistency or Rock Hardness	Color	Material Classification	USCS*	Remarks	PID/FID Reading (ppm): Sample	Sample BZ	Sample BZ	Drill BZ
0	1		1.7/			BL	COMPOST		MANURE ODOR, MOIST	2.1	2.1	2.1	2.1
	2		4.0			BRN	SILTY SAND		FILL				
	3												
4	4								DAMP @ BTM				
	5						TD 4.0						
	6												
	7												
	8												
	9												
	10												
	11												
	12												
	13												
	14												
	15												
						SAMPLED	13SS090002						
						@	945						
						SAMPLED	13SB090204						
						@	950						

* When rock coring, enter rock brokeness.

** Include monitor reading in 6 foot intervals @ borehole. Increase reading frequency if elevated reponse read.

Remarks: GEO PROBE MACRO CORE
BACKFILLED W HOLE PLUG

Drilling Area Background (ppm): 2.1

Converted to Well: Yes ____ No ✓ Well I.D. #: ____

Tetra Tech NUS, Inc.

BORING LOG

PROJECT NAME: NSWC CRANE
PROJECT NUMBER: N9060 CTO 0279
DRILLING COMPANY: BOWSER MORNER
DRILLING RIG: GEOPROBE 54LT

BORING NUMBER: 13SB10
DATE: 3-26-03
GEOLOGIST: M. G. COCHRAN
DRILLER: J. AKERS

Sample No. and Type or RQD	Depth (Ft.) or Run No.	Blows / 6" or RQD (%)	Sample Recovery / Sample Length	Lithology Change (Depth /Ft.) or Screened Interval	Soil Density/ Consistency or Rock Hardness	Color	Material Classification	USCS*	Remarks	PID/FID Reading (ppm) Sample	Sample Bottom	Bore Hole	Drill Area
	1					BL BRN	TOPSOIL .5' SANDY SILT	SM	no MOIST	1.9	1.9	1.9	1.9
	2								FILL				
	3												
	4								DAMP @ BTM				
	5						TD 4.0						
	6												
	7												
	8												
	9												
	10												
	11												
	12												
	13												
	14												
	15												
						SAMPLED	135S100002 @ 930						
						SAMPLED	13SB100204 @ 935						

* When rock coring, enter rock brokeness.

** Include monitor reading in 6 foot intervals @ borehole. Increase reading frequency if elevated reponse read.

Remarks: GEOPROBE MACRO CORE

Drilling Area Background (ppm): 1.9

Converted to Well: Yes ____ No ✓ Well I.D. #: ____

Tetra Tech NUS, Inc.

BORING LOG

PROJECT NAME: NSWC CRANE
PROJECT NUMBER: N9060 CTO 0279
DRILLING COMPANY: BOWSER MORNER
DRILLING RIG: GEO PROBE 54LT

BORING NUMBER: 43 SB 11
DATE: 3-26-03
GEOLOGIST: M. G. COCHRAN
DRILLER: J AKERS

Sample No. and Type or RQD	Depth (Ft.) or Run No.	Blows / 6" or RQD (%)	Sample Recovery / Sample Length	Lithology Change (Depth /Ft.) or Screened Interval	MATERIAL DESCRIPTION: Soil Density/ Consistency or Rock Hardness	Color	Material Classification	USCS*	Remarks	PID/FID Reading (ppm): Background	Borehole	Borehole	Drill Hole
0	1		2.6/		RO	BL BRN	TOPSOIL SILTY SAND	SM	MOIST@TOP	1.9	1.9	1.9	1.9
	2		4.0						FILL				
	3								DAMP@BTM				
4	4								HARD@BTM				
	5						TD 4.0						
	6												
	7												
	8												
	9												
	10												
	11												
	12												
	13												
	14												
	15												
						SAMPLED	13 S S 11 0002						
						@	915						
						SAMPLED	13 SB 110204						
						@	920						

* When rock coring, enter rock brokeness.

** Include monitor reading in 6 foot intervals @ borehole. Increase reading frequency if elevated reponse read.

Remarks: GEOPROBE MACRO CORE

Drilling Area Background (ppm): 1.9

Converted to Well: Yes ____ No ✓ Well I.D. #: ____

Tetra Tech NUS, Inc.

BORING LOG

PROJECT NAME: NSWC CRANE
PROJECT NUMBER: N9060 CTO 0279
DRILLING COMPANY: BOWSER MORNER
DRILLING RIG: GEO PROBE 54LT

BORING NUMBER: 43SB12
DATE: 3-26-03
GEOLOGIST: M. G. COCHRA
DRILLER: J. AKERS

Sample No. and Type or RQD	Depth (Ft.) or Run No.	Blows / 6" or RQD (%)	Sample Recovery / Sample Length	Lithology Change (Depth /Ft.) or Screened Interval	MATERIAL DESCRIPTION: Soil Density/ Consistency or Rock Hardness	Color	Material Classification	USCS *	Remarks	PID/FID Reading (ppm): Sample	Background	BZ Sample	BZ Background
G	1		2.3/			BRN	SANDY SILT	SM	DAMP	2.1	2.1	2.1	2.1
	2		4.0						FILL	↓	↓	↓	↓
	3								BLACK @ 1.5-2.0,				
4	4								RK FRAG IN				
	5						TD 4.0		BTM				
	6												
	7												
	8												
	9												
	10												
	11												
	12												
	13												
	14												
	15												
						SAMPLED 13SS120002 @ 830							
						SAMPLED 13SB120204 @ 835							

* When rock coring, enter rock brokeness.

** Include monitor reading in 6 foot intervals @ borehole. Increase reading frequency if elevated reponse read.

Remarks: GEOPROBE MACRO CORE

Drilling Area Background (ppm): 2.1

Converted to Well: Yes ____ No ✓ Well I.D. #: ____

Tetra Tech NUS, Inc.

BORING LOG

PROJECT NAME: NSWC CRANE
PROJECT NUMBER: N9060 CTO 0279
DRILLING COMPANY: BOWSER MORNER
DRILLING RIG: GEOPROBE 54 LT

BORING NUMBER: +3 SB 13
DATE: 3-26-03
GEOLOGIST: M G. COCHRAN
DRILLER: J. AKERS

Sample No. and Type or RQD	Depth (FL) or Run No.	Blows / 6" or RQD (%)	Sample Recovery / Sample Length	Lithology Change (Depth /FL) or Screened Interval	MATERIAL DESCRIPTION: Soil Density/ Consistency or Rock Hardness	Color	Material Classification	USCS *	Remarks	PID/FID Reading (ppm): Sample	Sample BZ	Sample BZ	Drill BZ
0	1		3.1/			BRN	SANDY SILT	SM	DAMP	0	0	0	0
	2		4.0						FILL				
	3												
4	4												
	5						TD 4.0						
	6												
	7												
	8												
	9												
	10												
	11												
	12												
	13												
	14												
	15												
						SAMPLED 1355130002							
						@ 750							
						SAMPLED 1358130204							
						@ 755							

* When rock coring, enter rock brokeness.

** Include monitor reading in 6 foot intervals @ borehole. Increase reading frequency if elevated reponse read.

Remarks: GEOPROBE MACRO CORE

Drilling Area Background (ppm): 0

Converted to Well: Yes ____ No ✓ Well I.D. #: ____

Tetra Tech NUS, Inc.

BORING LOG

PROJECT NAME: NSWC CRANE
PROJECT NUMBER: N9060 CTO 0279
DRILLING COMPANY: BOWSER MORNER
DRILLING RIG: HAND AUGER

BORING NUMBER: 13SB14
DATE: 4/10/03
GEOLOGIST: Bob Balmoyer
DRILLER: Jeff Akers

Sample No. and Type or RQD	Depth (FL) or Run No.	Blows / 6" or RQD (%)	Sample Recovery / Sample Length	Lithology Change (Depth /FL) or Screened Interval	MATERIAL DESCRIPTION: Soil Density/ Consistency or Rock Hardness	Color	Material Classification	USCS*	Remarks	PID/FID Reading (ppm): Sample	Sampler BZ	Borehole**	Driller BZ**
	1		1' / 1'			BR	SANDY SILT w/ SOME TOPSOIL	ML	MOIST	0.0			
	2			T.D. 1'									
	3						REFUSAL @ 1'						
	4						2 OFFSETS						
	5												
	6												
	7												
	8												
	9												
	10												
	11												
	12												
	13												
	14												
	15												
						SAMPLED 13SB140001 @ 1210							
						SAMPLED @							

* When rock coring, enter rock brokeness.

** Include monitor reading in 6 foot intervals @ borehole. Increase reading frequency if elevated reponse read.

Remarks:

Drilling Area Background (ppm): 0.0

Converted to Well: Yes _____ No X Well I.D. #: _____

D.2

SWMU 13 ROUND 2

WELL NO.: 13MWT27

Tetra Tech NUS, Inc.

BEDROCK MONITORING WELL SHEET WELL INSTALLED IN BEDROCK

PROJECT CRANE NSWC	LOCATION SWMU 13	DRILLER JON K
PROJECT NO. 9060	BORING 13MWT27	DRILLING METHOD ROTO SONIC
DATE BEGUN 11-5-03	DATE COMPLETED 11-5-03	
FIELD GEOLOGIST FRED W. RAMSER		DEVELOPMENT METHOD BAILER/ SURGE/PUMP
GROUND ELEVATION 696.09	DATUM NAVD 88	

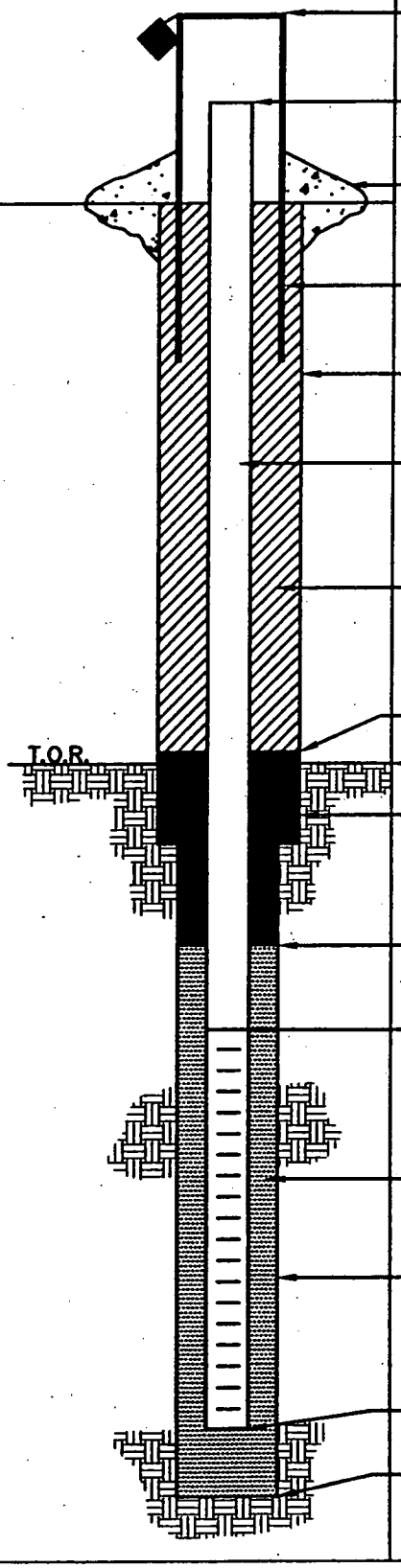

ELEVATION/HEIGHT OF TOP OF SURFACE CASING: 698.18/~3.0

ELEVATION/HEIGHT TOP OF RISER: 698.13/~2.5

TYPE OF SURFACE SEAL: 4' x 4' x 6"

I.D. OF SURFACE CASING: 4" x 4" SQ

DIAMETER OF HOLE: 8"

RISER PIPE I.D.: 2"

TYPE OF RISER PIPE: SCH 40 PVC

TYPE OF BACKFILL: BENTONITE CHIPS CETCO PURE GOLD

ELEVATION/DEPTH TOP OF SEAL: 692.09/ 4'

ELEVATION/DEPTH TOP OF BEDROCK: 687.09/ 9'

TYPE OF SEAL: BENTONITE CHIPS CETCO PURE GOLD

ELEVATION/DEPTH TOP OF SAND: 689.09/ 7'

ELEVATION/DEPTH TOP OF SCREEN: 686.09/10'

TYPE OF SCREEN: PVC

SLOT SIZE x LENGTH: 0.02 x 10'

I.D. SCREEN: 2"

TYPE OF SAND PACK: QTZ SAND 10/30 SEP/ 18B

DIAMETER OF HOLE IN BEDROCK: 5"

CORE/REAM: CORE

ELEVATION/DEPTH BOTTOM SCREEN: 676.09/20'

ELEVATION/DEPTH BOTTOM OF SAND: 675.09/21'

ELEVATION/DEPTH BOTTOM OF HOLE: 675.09/21'

BACKFILL MATERIAL BELOW SAND: SAND

ACAD:FORM_MWINBR.dwg 07/28/99 INL

Tetra Tech NUS, Inc.

BORING LOG

PROJECT NAME: Crane NSWC
PROJECT NUMBER: 9060
DRILLING COMPANY: BOWSER MORNER
DRILLING RIG: VERSA SONIC

BORING No.: 13MWT27
DATE: 11-5-03
GEOLOGIST: FRED W. RAMSER
DRILLER: JON KEIFER

Sample No. and Type or RQD	Depth (Ft.) or Run No.	Blows / 6" or RQD (%)	Sample Recovery / Sample Length	Lithology Change (Depth/Ft.) or Screened Interval	MATERIAL DESCRIPTION: Soil Density/ Consistency or Rock Hardness	Color	Material Classification	USCS*	Remarks	PID/FID Reading (ppm): Sample	Sampler BZ	Borehole**	Driller BZ**
							YEL BRN SILT+CLAY TR SAND		TOP SOIL				
							SILT + f-g SAND	SC/SM					
							VARIEGATED		DECOMPOSED				
							YEL BRN ORG GREY		BRDROCK				0
S-1	5						LAM.						
									GRADES TO A				
						YEL BRN	f-g SAND + SILT	SC	LESS DEC.				
						ORG BRN	— MOTTLED		BD RK				0
						GREY	— LAM.		STRONLY WEATHERED				
	10		10/10	TOP OF BDRK		YEL ORG	SANDSTONE	BR					
					MED HARD		IRREGULAR LAM.						
							ABUNDANT FE STAIN						
							SOME VUGS			10			0
							PLANT FOSSILS						
S-2	15	20%											
					SOFT		COAL.	V.Br	BRITTLE				
					SOFT	V. LIGHT GREY CLAY			UNCONSOLIDATED	12			0
							GRADING TO A						
	20		10/10		MED HARD	V. LIGHT GREY SAND STONE, VUGS		Br	PLANT FOSSILS				
				TD@21'									
							SAND: 7-21						
							SCREEN 10-20						
							BENTONITE: 2-7						

* When rock coring, enter rock brokeness.

** Include monitor reading in 6 foot intervals @ borehole. Increase reading frequency if elevated reponse read.

Remarks: DRILLED TO 21 TO INSTALL SCREEN 10-20'

Drilling Area Background (ppm): 0

Converted to Well: Yes ✓ No _____ Well I.D. #: 13MWT27

WELL NO.: 13MWT28

Tetra Tech NUS, Inc.

BEDROCK MONITORING WELL SHEET WELL INSTALLED IN BEDROCK

PROJECT NSWC CRANE	LOCATION SWMU 13	DRILLER JON KEIFER
PROJECT NO. 9060	BORING 13MWT28	DRILLING METHOD ROTO-SONIC
DATE BEGUN 11/19/03	DATE COMPLETED 11/19/03	
FIELD GEOLOGIST SCOTT GRIER		DEVELOPMENT METHOD BAILER/SURGE/PUMP
GROUND ELEVATION 703.54	DATUM NAVD 88	

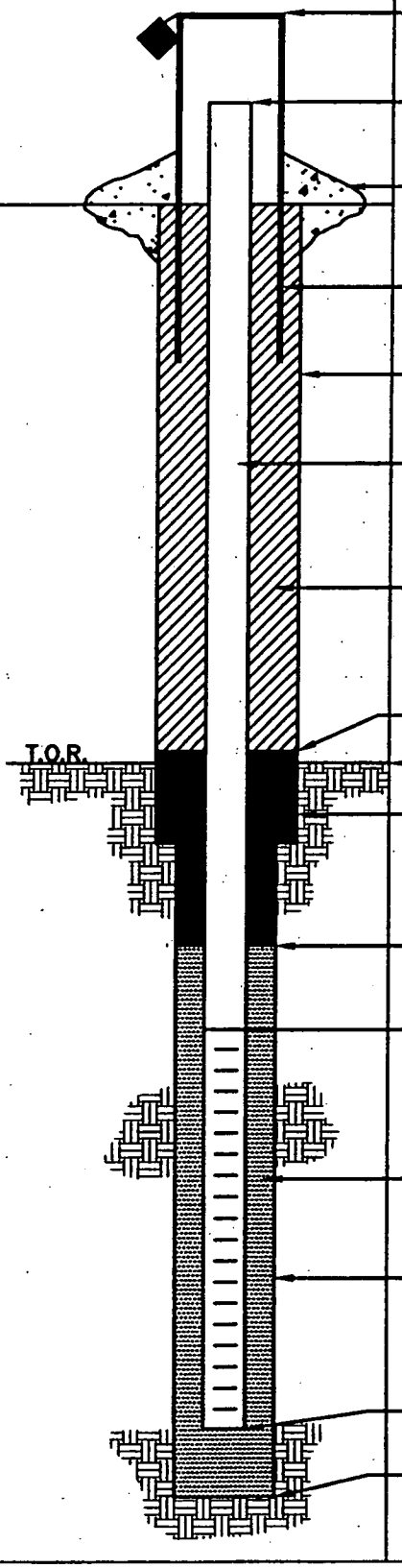

ELEVATION/HEIGHT OF TOP OF SURFACE CASING: 705.53 / 2.0

ELEVATION/HEIGHT TOP OF RISER: 705.55 / 2.0

TYPE OF SURFACE SEAL: CONCRETE

I.D. OF SURFACE CASING: 4"x4" STEEL

DIAMETER OF HOLE: 11" down to 38.5

ISOLATION CASING 6" DIA. DEPTH: 38.5

RISER PIPE I.D.: 2"

TYPE OF RISER PIPE: 2.5" PVC

TYPE OF BACKFILL: BENTONITE

ELEVATION/DEPTH TOP OF SEAL: 700.54 / 3'

ELEVATION/DEPTH TOP OF BEDROCK: 685.04 / 18.5

TYPE OF SEAL: BENTONITE PURE GOLD CHIPS GEL CETOO

ELEVATION/DEPTH TOP OF SAND: 628.54 / 75

ELEVATION/DEPTH TOP OF SCREEN: 625.54 / 78

TYPE OF SCREEN: PVC

SLOT SIZE x LENGTH: 20 x 10'

I.D. SCREEN: 2" - 20 slot

TYPE OF SAND PACK: QTZ MED SAND

DIAMETER OF HOLE IN BEDROCK:

CORE/REAM: 4" / 5"

ELEVATION/DEPTH BOTTOM SCREEN: 615.54 / 88

ELEVATION/DEPTH BOTTOM OF SAND: 615.54 / 88

ELEVATION/DEPTH BOTTOM OF HOLE: 615.54 / 88

BACKFILL MATERIAL BELOW SAND: N/A

ACAD:FORM_MWINBR.dwg 07/20/99 INL

Tetra Tech NUS, Inc.

BORING LOG

PROJECT NAME: Crane NSWC
PROJECT NUMBER: 9060
DRILLING COMPANY: BOWSER MORNER
DRILLING RIG: ROTO-SONIC

BORING No.: 13MWT28
DATE: 11-3-03
GEOLOGIST: FRED W RAMSER
DRILLER: JON KEIFER

Sample No. and Type or RQD	Depth (Ft.) or Run No.	Blows / 6" or RQD (%)	Sample Recovery / Sample Length	Lithology Change (Depth/Ft.) or Screened Interval	Soil Density/ Consistency or Rock Hardness	Color	Material Classification	USCS*	Remarks	PID/FID Reading (ppm) Sample	Sampler BZ	Borehole**	Driller BZ**
	16							SM/SC	DRILLED TO				
	17								0-17.5 W/O SPL				
	18			TOP OF BDRK				↓	CUTTINGS YEL BRN SILT				
	19				SOFT	DK	YEL BRN MUDSTONE W/ ROCK FRAG.	VBR	+ E. YELLOW CLAY ~10'				
	20						MOTTLED GREY		MOTTLED GREY 10-20 WEATHERED				0
					SOFT	BLK	COAL, BRITTLE	VBR	BD RK COAL ~18'	10			
S-1		09w			MED SOFT	MED	GREY SANDSTONE,	BR					
							↓	↓					
					MED	MED	GREY SANDSTONE	VBR					
	25				SOFT								
							V. THIN BEDDED						
			7/10							8			
					MED		↓						0
					HARD	MED	TO LIGHT GREY SANDSTONE	BR					
	30						IRREGULAR LAM.						
							OCC VUGS ~ 1/4"						
S-2		59w					HOR. FRAG.			9			
													0
	35												
										12			0
			4.5/10										
	40												

* When rock coring, enter rock brokeness.

** Include monitor reading in 6 foot intervals @ borehole. Increase reading frequency if elevated reponse read.

Drilling Area Background (ppm): 0.8

Remarks: CASING TO 38.5, 6" INSTALLED W/ 11" OD

Converted to Well: Yes ✓ No ____ Well I.D. #: 13MWT28

Tetra Tech NUS, Inc.

BORING LOG

PROJECT NAME: Crane NSWC
PROJECT NUMBER: 9060
DRILLING COMPANY: BOWSER
DRILLING RIG: VERSA-SONIC

BORING No.: 13 MWT 28
DATE: 11/19/03
GEOLOGIST: S. GRIER
DRILLER: J. REIFER

Sample No. and Type or RQD	Depth (Ft.) or Run No.	Blows / 6" or RQD (%)	Sample Recovery / Sample Length	Lithology Change (Depth/Ft.) or Screened Interval	Soil Density/ Consistency or Rock Hardness	Color	Material Classification	USCS*	Remarks	PID/FID Reading (ppm) Sample	Sampler BZ	Borehole**	Driller BZ**
	38				~~HARD~~ MED	DARK GREY	SILTY SANDSTONE		GREY W/ BLACK LAMS	0.0			0.8
							GREY SANDSTONE W/ BLACK LAMS OF SILT						
					VERY HARD	GREY	SANDSTONE ~~w/~~ few lams						
					HARD	GREY-BLACK	SILTY SANDSTONE GREY S.S. W BLACK LAMS OF SILT						
							INCREASING SILT						
C1													
	48	10%	10/10							10.0			0.8
C2													
	58	5%	10/10							11.0			0.8
					MED SOFT ~~HARD~~	BLACK	BLACK SHALE THINLY LAMINATED		FISSILE THIN LAMS				
					HARD	GREY	SILTY SANDSTONE						
					MED. SOFT	BLACK	SHALE ~~INCREASING SILT~~		FISSILE THIN LAMS				

* When rock coring, enter rock brokeness.

** Include monitor reading in 6 foot intervals @ borehole. Increase reading frequency if elevated reponse read.

Drilling Area Background (ppm): 0.9

Remarks: ~~0830~~ 100 cleaned out hole - H_2O Level = 77.0'
1100 H_2O level = 76.45

Converted to Well: Yes ✓ No _____ Well I.D. #: 13 MWT 28

Tetra Tech NUS, Inc.

BORING LOG

PROJECT NAME: Crane NSWC
PROJECT NUMBER: 9060
DRILLING COMPANY: BOWSER MORNER
DRILLING RIG: VERSA-SONIC

BORING No.: 13 MWT 28
DATE: 11/19/03
GEOLOGIST: SCOTT GRIER
DRILLER: JON KETFER

Sample No. and Type or RQD	Depth (Ft.) or Run No.	Blows / 6" or RQD (%)	Sample Recovery / Sample Length	Lithology Change (Depth/Ft.) or Screened Interval	Soil Density/ Consistency or Rock Hardness	Color	Material Classification	USCS*	Remarks	PID/FID Reading (ppm) Sample	Sampler BZ	Borehole**	Driller BZ**
	63	~~63~~											
					MED ~~HARD~~ ~~SOFT~~	BLACK	~~GREY SAND~~ SHALE BLACK, BRITTLE	BR	FISSILE - THIN LAMS				
							SILTY SANDSTONE	SM					
C3							DECREASING SILT						
	68	3%	9/10							80			0.8
					VERY HARD	GREY	GREY SANDSTONE						
					MED SOFT ~~BRITTLE~~	BLACK	SHALE THIN LAMINATIONS						
C4													
	78	3%	8.5/10							65			0.8
					VERY HARD	GREY BROWN BLACK	SANDSTONE (VARVED)						
					MED SOFT ~~HARD~~	BLACK	SHALE THIN LAMS		FISSILE - THIN LAMS				
									Screen set @ 88' → 78'				
C5													
	88	5%	7.5/10		VERY HARD	GREY BROWN	SANDSTONE (VARVED)			02			0.8

* When rock coring, enter rock brokeness.

** Include monitor reading in 6 foot intervals @ borehole. Increase reading frequency if elevated reponse read.

Drilling Area Background (ppm): 0.8

Remarks: 1130 hole is blown out + H_2O level = 86'
1230 H_2O level = 85.5'

Converted to Well: Yes ✓ No _____ Well I.D. #: 13 MWT 28

WELL NO.: 13MWT29

Tetra Tech NUS, Inc.

BEDROCK MONITORING WELL SHEET WELL INSTALLED IN BEDROCK

PROJECT CRANE	LOCATION CRANE, IN.	DRILLER J. WALSH
PROJECT NO. 9060	BORING 13 MW T29	DRILLING METHOD HSA / A.R.
DATE BEGUN 11-4-03	DATE COMPLETED 11-4-03	
FIELD GEOLOGIST M. G. COCHRAN		DEVELOPMENT METHOD BAILER/SURGE/PUMP
GROUND ELEVATION 698.10	DATUM NAVD 88	

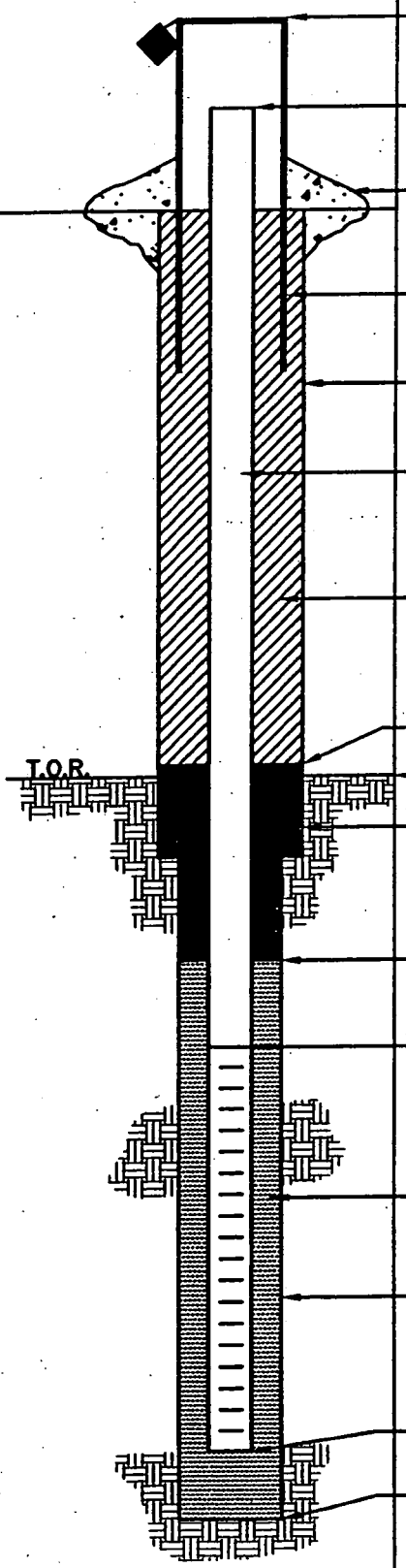

ELEVATION/HEIGHT OF TOP OF SURFACE CASING: 700.50 / 2.4

ELEVATION/HEIGHT TOP OF RISER: 700.44 / 2.34

TYPE OF SURFACE SEAL: CONCRETE

I.D. OF SURFACE CASING: 4" x 4" SQ STEEL

DIAMETER OF HOLE: 8½ → 13', 4" → TD

RISER PIPE I.D.: 2"

TYPE OF RISER PIPE: SCH 40 PVC

TYPE OF BACKFILL: BENTONITE CHIPS

ELEVATION/DEPTH TOP OF SEAL: 695.1 / 3'

ELEVATION/DEPTH TOP OF BEDROCK: 689.1 9'

TYPE OF SEAL: CETCO PURE GOLD BENTONITE CHIPS

ELEVATION/DEPTH TOP OF SAND: 691.1 / 7

ELEVATION/DEPTH TOP OF SCREEN: 689.1 / 9

TYPE OF SCREEN: PVC SCH 40

SLOT SIZE x LENGTH: .020 x 10'

I.D. SCREEN: 2"

TYPE OF SAND PACK: GLOBAL MEDIUM SAND

DIAMETER OF HOLE IN BEDROCK: 4"

CORE/REAM:

ELEVATION/DEPTH BOTTOM SCREEN: 679.1 / 19

ELEVATION/DEPTH BOTTOM OF SAND: 678.1 / 20

ELEVATION/DEPTH BOTTOM OF HOLE: 678.1 / 20

BACKFILL MATERIAL BELOW SAND:

ACAD:FORM_MWNBR.dwg 07/20/99 INL

Tetra Tech NUS, Inc.

BORING LOG

PROJECT NAME: Crane NSWC
PROJECT NUMBER: 9060
DRILLING COMPANY: BOWSER-MORNER
DRILLING RIG: CME 550

BORING No.: 13MWT29
DATE: 11-4-03
GEOLOGIST: M. G. COCHRAN
DRILLER: J. WALSH

Sample No. and Type or RQD	Depth (Ft.) or Run No.	Blows / 6" or RQD (%)	Sample Recovery / Sample Length	Lithology Change (Depth/Ft.) or Screened Interval	MATERIAL DESCRIPTION: Soil Density/ Consistency or Rock Hardness	Color	Material Classification	USCS *	Remarks	PID/FID Reading (ppm): Sample	Sampler BZ	Borehole**	Driller BZ**
						BRN	SILT	SM		–	–	0	0
	4												
S1		4/5	2.0/		M. DENSE	BRN	CLAYEY SILT	SM	DAMP	0	0	0	0
	6	6/4	2.0			GR BRN			FILL TO 9'?				
				9.0 XXX									
	9												
S2		6/100/3"	1.4/		SOFT	RD BRN	SHALE, WEATHERED		HARD DRILLING	0	0	0	0
	11		2.0										
									HSA REFUSAL @ 13.5'				
									H_2O IN CHIPS FROM HOLE				
									H_2O ZONE @ 19' PER DRILLER				
							TD 20'						

* When rock coring, enter rock brokeness.

** Include monitor reading in 6 foot intervals @ borehole. Increase reading frequency if elevated reponse read.

Drilling Area Background (ppm): 0

Remarks: HSA 4 1/4" ID, 8 1/2" O.D. TO 13.5', 4" ROLLER BIT W/ AIR @ 13.5' THRU HSA. 4" ROLLER BIT

Converted to Well: Yes ✓ No _____ Well I.D. #: 13MWT29

WELL NO.: 13MWT30

Tetra Tech NUS, Inc.

BEDROCK MONITORING WELL SHEET WELL INSTALLED IN BEDROCK

PROJECT CRANE	LOCATION CRANE, IN	DRILLER BONSER-MORNER
PROJECT NO. 9060	BORING 13MWT30	DRILLING METHOD HSA / AR
DATE BEGUN 11-6-03	DATE COMPLETED 11-6-03	
FIELD GEOLOGIST M.G. COCHRAN		DEVELOPMENT METHOD BAILER/PUMP/SURGE
GROUND ELEVATION 696.57	DATUM NAVD 88	

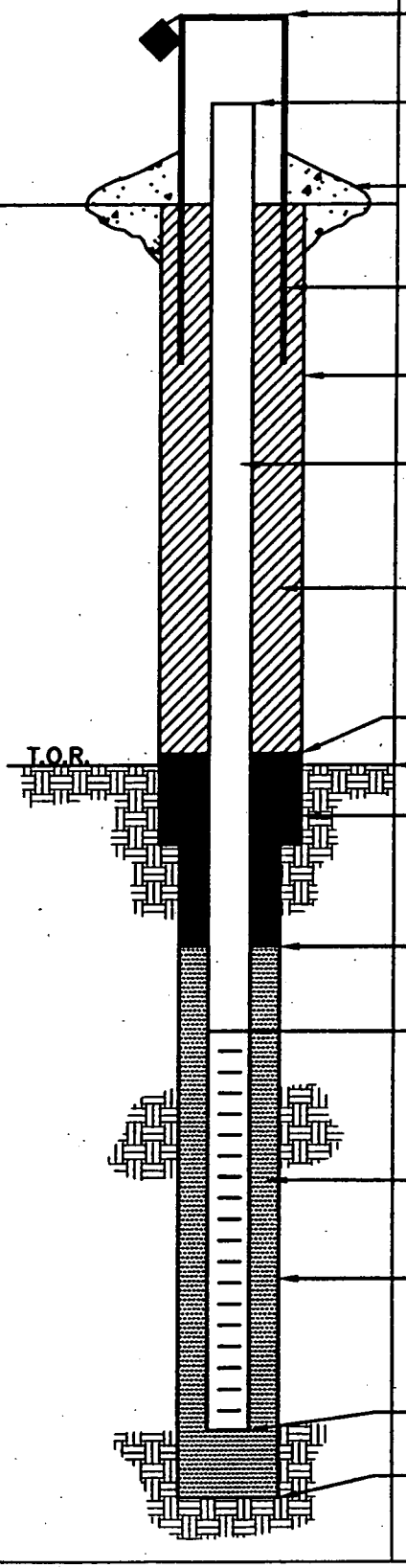

ELEVATION/HEIGHT OF TOP OF SURFACE CASING: 698.97 / 2.5

ELEVATION/HEIGHT TOP OF RISER: 698.94 / 2.5

TYPE OF SURFACE SEAL: CONCRETE

I.D. OF SURFACE CASING: 4" x 4"

DIAMETER OF HOLE: 8 1/2" TO 15', 4" TO TD

RISER PIPE I.D.: 2"

TYPE OF RISER PIPE: PVC SCHEDULE 40

TYPE OF BACKFILL: CETCO PURE GOLD MEDIUM CHIPS

ELEVATION/DEPTH TOP OF SEAL: 693.57 / 3'

ELEVATION/DEPTH TOP OF BEDROCK: 681.57 / 15

TYPE OF SEAL: CETCO PURE GOLD MEDIUM CHIPS

ELEVATION/DEPTH TOP OF SAND: 684.57 / 12

ELEVATION/DEPTH TOP OF SCREEN: 682.57 / 14

TYPE OF SCREEN: PVC SLOTTED

SLOT SIZE x LENGTH: .020 x 10'

I.D. SCREEN: 2"

TYPE OF SAND PACK: BEST MEDIUM SAND

DIAMETER OF HOLE IN BEDROCK: 4"

CORE/REAM:

ELEVATION/DEPTH BOTTOM SCREEN: 672.57 / 24

ELEVATION/DEPTH BOTTOM OF SAND: 671.57 / 25

ELEVATION/DEPTH BOTTOM OF HOLE: 671.57 / 25

BACKFILL MATERIAL BELOW SAND: N/A

ACAD: FORM_MWINBR.dwg 07/20/99 INL

Tetra Tech NUS, Inc.

BORING LOG

PROJECT NAME: Crane NSWC
PROJECT NUMBER: 9060
DRILLING COMPANY: BOWSER MORNER
DRILLING RIG: CME 550 ATV

BORING No.: 13MWT30
DATE: 11-6-03
GEOLOGIST: M. G. COCHRAN
DRILLER: J. WALSH

Sample No. and Type or RQD	Depth (Ft.) or Run No.	Blows / 6" or RQD (%)	Sample Recovery / Sample Length	Lithology Change (Depth/Ft.) or Screened Interval	MATERIAL DESCRIPTION: Soil Density/ Consistency or Rock Hardness	Color	Material Classification	USCS*	Remarks	PID/FID Reading (ppm): Sample	Sampler BZ	Borehole**	Driller BZ**
						DK BRN	CLAYEY SILT			–	–	0	0
						LT BRN	CLAYEY SILT						
									HARD DRILLING @ 15'				
				15		LT Brw							
						BL	COAL						
						LT GRE							
							TD 25.0						

* When rock coring, enter rock brokeness.

** Include monitor reading in 6 foot intervals @ borehole. Increase reading frequency if elevated reponse read.

Drilling Area Background (ppm): –

Remarks: 4 1/4 ID / 8 1/2 OD HSA TO 15'. 4" A.R. w ROLLER BIT THEREAFTER. LOGGED DRILL CUTTINGS

Converted to Well: Yes ✓ No _____ Well I.D. #: 13MWT30

WELL NO.: 13MWT31

Tetra Tech NUS, Inc.

BEDROCK MONITORING WELL SHEET WELL INSTALLED IN BEDROCK

PROJECT: CRANE
PROJECT NO.: 9060
DATE BEGUN: 11-5-03
FIELD GEOLOGIST: M. G. COCHRAN
GROUND ELEVATION: 693.56

LOCATION: CRANE IN
BORING: 13MWT31
DATE COMPLETED: 11-5-03
DATUM: NAVD 88

DRILLER: BOWSER-MORNER
DRILLING METHOD: HSA / AR
DEVELOPMENT METHOD: BAILER/ PUMP/SURGE

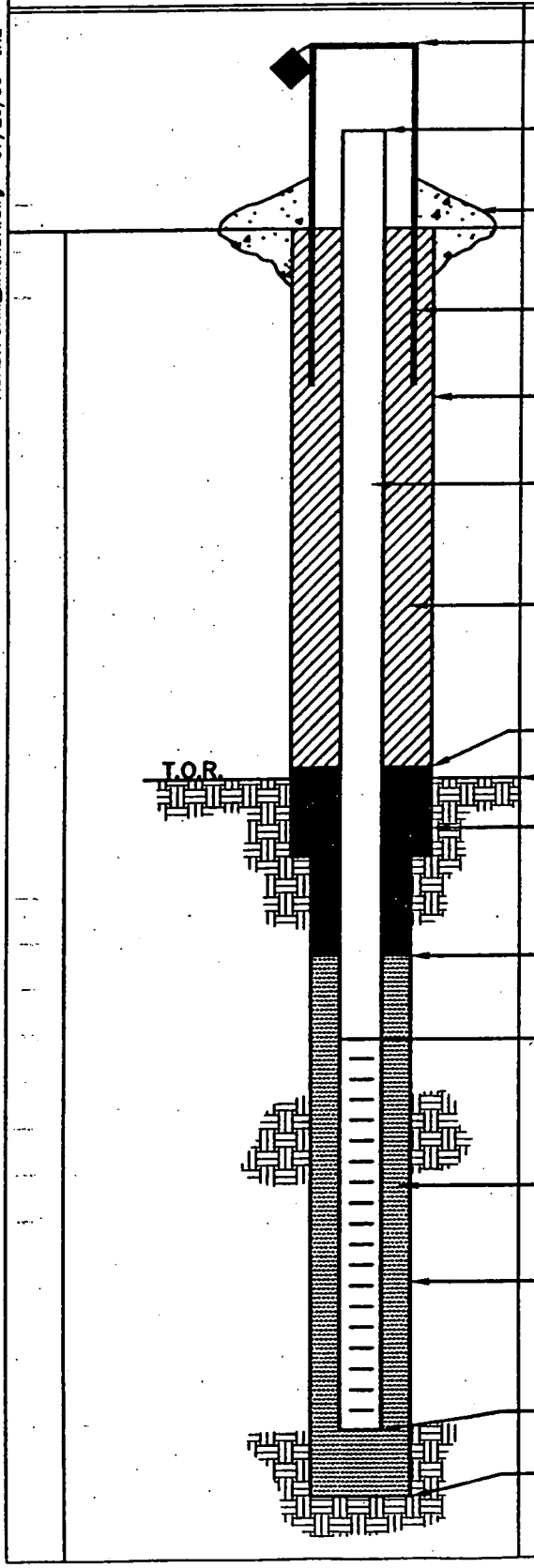

ELEVATION/HEIGHT OF TOP OF SURFACE CASING: 696.15/2.59

ELEVATION/HEIGHT TOP OF RISER: 696.21/2.65

TYPE OF SURFACE SEAL: CONCRETE

I.D. OF SURFACE CASING: 4" x 4" SQ STEEL

DIAMETER OF HOLE: 8 1/2" TO 14.5', 4" TO TD

RISER PIPE I.D.: 2" ID
TYPE OF RISER PIPE: PVC SCHEDULE 40

TYPE OF BACKFILL: CETCO PURE GOLD BENTONITE CHIPS

ELEVATION/DEPTH TOP OF SEAL: 690.56/3'

ELEVATION/DEPTH TOP OF BEDROCK: 683.56/10'

TYPE OF SEAL: CETCO PURE GOLD BENTONITE CHIPS

ELEVATION/DEPTH TOP OF SAND: 685.56/8'

ELEVATION/DEPTH TOP OF SCREEN: 683.56/10.
TYPE OF SCREEN: PVC SLOTTED
SLOT SIZE x LENGTH: .020 X 10'
I.D. SCREEN: 2"

TYPE OF SAND PACK: GLOBAL MEDIUM SAND

DIAMETER OF HOLE IN BEDROCK: 4"
CORE/REAM:

ELEVATION/DEPTH BOTTOM SCREEN: 673.56/20
ELEVATION/DEPTH BOTTOM OF SAND: 673.56/20.
ELEVATION/DEPTH BOTTOM OF HOLE: 673.56/20.
BACKFILL MATERIAL BELOW SAND: N/A

ACAD:FORM_MWNBR.dwg 07/20/99 INL

Tetra Tech NUS, Inc.

BORING LOG

PROJECT NAME: Crane NSWC
PROJECT NUMBER: 9060
DRILLING COMPANY: BOWSER-MORNER
DRILLING RIG: CME 550

BORING No.: 13MWT31
DATE: 11-5-03
GEOLOGIST: M. G. COCHRAN
DRILLER: J. WALSH

Sample No. and Type or RQD	Depth (Ft.) or Run No.	Blows / 6" or RQD (%)	Sample Recovery / Sample Length	Lithology Change (Depth/Ft.) or Screened Interval	MATERIAL DESCRIPTION: Soil Density/ Consistency or Rock Hardness	Color	Material Classification	USCS*	Remarks	PID/FID Reading (ppm): Sample	Sampler BZ	Borehole**	Driller BZ**
						LT BRN	CLAYEY SILT	SM	LOOKS NATL. DAMP			0	0
				10.0					HARD DRILL @10'				
	12.5												
		36	.4/.8		SOFT	GREY	SHALE.		LAMINATED, DAMP	0	0	0	0
	14.5	50/3"											
							TD 20.0						

* When rock coring, enter rock brokeness.

** Include monitor reading in 6 foot intervals @ borehole. Increase reading frequency if elevated reponse read.

Drilling Area Background (ppm): 0

Remarks: 4 1/4 ID / 8 1/2 OD HSA TO 14.5', 4" ROTARY BIT W AIR TO TD. STANDBY FOR 1/2 HR AT 20' TO WAIT FOR H_2O. 2" H_2O IN HOLE

Converted to Well: Yes ✓ No _____ Well I.D. #: 13MWT31

WELL NO.: 13TMWT32

Tetra Tech NUS, Inc.

BEDROCK MONITORING WELL SHEET WELL INSTALLED IN BEDROCK

PROJECT CRANE NSWC	LOCATION SWMU 13	DRILLER JON KEIFER
PROJECT NO. 9060	BORING 13MWT32	DRILLING METHOD ROTO-SONIC
DATE BEGUN 10-28-03	DATE COMPLETED 10-29-03	
FIELD GEOLOGIST FRED W. RAMSER		DEVELOPMENT METHOD BAILER/PUMP/SURGE
GROUND ELEVATION 693.62	DATUM NAVD	

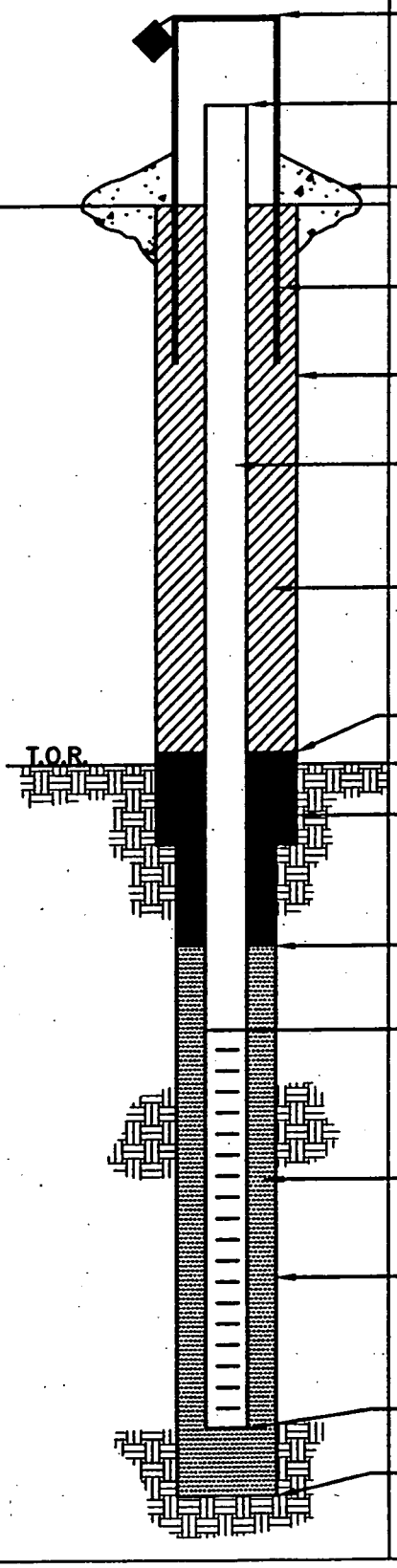

ELEVATION/HEIGHT OF TOP OF SURFACE CASING: 696.06 / 2.44

ELEVATION/HEIGHT TOP OF RISER: 696.04 / 2.42

TYPE OF SURFACE SEAL: CONCRETE 4' x 4' x 6"

I.D. OF SURFACE CASING: 4" x 4"

DIAMETER OF HOLE: 8"

RISER PIPE I.D.: 2"

TYPE OF RISER PIPE: SCH 40 PVC 2" Ø

TYPE OF BACKFILL: BENTONITE CHIPS CETCO PURE GOLD

ELEVATION/DEPTH TOP OF SEAL: 691.62 / 2'

ELEVATION/DEPTH TOP OF BEDROCK: 691.12 / 2.5'

TYPE OF SEAL: BENTONITE CHIPS CETCO PURE GOLD

ELEVATION/DEPTH TOP OF SAND: 688.62 / 5'

ELEVATION/DEPTH TOP OF SCREEN: 685.62 / 8'

TYPE OF SCREEN: PVC

SLOT SIZE x LENGTH: 0.02 x 10'

I.D. SCREEN: 2"

TYPE OF SAND PACK: QTZ SAND 10/30 SEP/18B

DIAMETER OF HOLE IN BEDROCK: 5"

CORE/REAM: CORE BIT (4.25 IN DIA)

ELEVATION/DEPTH BOTTOM SCREEN: 675.62 / 18'

ELEVATION/DEPTH BOTTOM OF SAND: 673.62 / 20'

ELEVATION/DEPTH BOTTOM OF HOLE: 668.62 / 25'

BACKFILL MATERIAL BELOW SAND: BENTONITE CHIPS

ACAD:FORM_MWINBR.dwg 07/20/99 INL

Tetra Tech NUS, Inc.

BORING LOG

PROJECT NAME: Crane NSWC
PROJECT NUMBER: 9060
DRILLING COMPANY: BOWSER MORNER
DRILLING RIG: VERSA-SONIC

BORING No.: 13MWT32
DATE: 10-28-03
GEOLOGIST: FRED W RAMSER
DRILLER: JON K

Sample No. and Type or RQD	Depth (Ft.) or Run No.	Blows / 6" or RQD (%)	Sample Recovery / Sample Length	Lithology Change (Depth/Ft.) or Screened Interval	Soil Density/ Consistency or Rock Hardness	Color	Material Classification	USCS*	Remarks	PID/FID Reading (ppm) Sample	Sampler BZ	Borehole**	Driller BZ**
					MOD	YEL BRN	SILT + SAND GRADING TO	SM					
S-1 1521						LT YEL BRN	WEATHERED SAND STONE @ 2.5						
				TOP OF BDRK									
							STRONGLY WEATHERED						
	5						SAND STONE			2			0
							SANDSTONE		NO RECOVERY @ 5-10				
							WEATHERED		WEATHERED				
									BDRK ? YEL BRN				
									@ CUTTINGS	5			
	10												0
					MED	YEL	BRN SANDSTONE	BR					
					HARD		MED BEDDING		IRON				
									STAINING				
									LAMINATIONS	10			0
S-2	15	99%			SOFT		SAND + SILT	BR	STRONGLY WEATHERED				
					MED	YEL	BRN SANDSTONE	BR	V. BR				
					HARD		LOW ∡ FRAC						
							Fe STAINED LAM.		H_2O=26'4" @				
									1652 (BTC)	12			0
	20		8/10										
							LESS Fe STAINING		WL=9' BGS 10-29-03				
S-3					MED SOFT	LT	GREY SILT SAND STONE	VBR	-SCREEN 8-18				
		20%			SOFT	DK GREY	SILT STONE GRADING TO MUDSTONE		-SAND 5-20	7			0
									-BENT CHIP 20-25				
			5/5			BLK	SHALE		-SEAL 2-5				

* When rock coring, enter rock brokeness.

** Include monitor reading in 6 foot intervals @ borehole. Increase reading frequency if elevated reponse read.

Drilling Area Background (ppm): —

Remarks: STARTED USING AIR ONLY, HIT BDRK @ 2.5' WILL CONVERT TO H_2O, SHALLOW WELL
TD=25'

Converted to Well: Yes ✓ No _____ Well I.D. #: 13MWT32

WELL NO.: 13MWT33

Tetra Tech NUS, Inc.

BEDROCK MONITORING WELL SHEET WELL INSTALLED IN BEDROCK

PROJECT CRANE	LOCATION CRANE IN	DRILLER BOWSER-MORNER
PROJECT NO. 9060	BORING 13MWT33	DRILLING METHOD HSA / AR
DATE BEGUN 11-6-03	DATE COMPLETED 11-6-03	
FIELD GEOLOGIST M. G. COCHRAN		DEVELOPMENT METHOD BAILER/PUMP/SURGE
GROUND ELEVATION 700.14	DATUM NAVD	

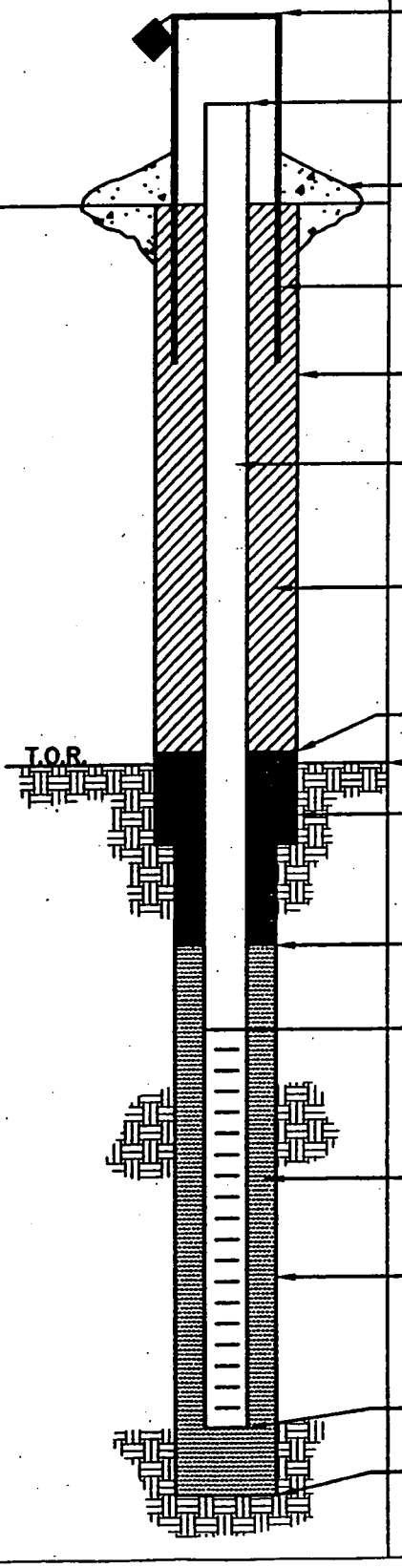

ELEVATION/HEIGHT OF TOP OF SURFACE CASING: 702.05/2.0

ELEVATION/HEIGHT TOP OF RISER: 701.97/1.9

TYPE OF SURFACE SEAL: CONCRETE

I.D. OF SURFACE CASING: 4"x4" SQ

DIAMETER OF HOLE: 8 1/2 TO 10', 4" TO TD

RISER PIPE I.D.: 2"
TYPE OF RISER PIPE: PVC

TYPE OF BACKFILL: CETCO PURE GOLD MEDIUM PELLETS

ELEVATION/DEPTH TOP OF SEAL: 697.14/3

ELEVATION/DEPTH TOP OF BEDROCK: 690.14/10

TYPE OF SEAL: CETCO PURE GOLD MEDIUM PELLETS

ELEVATION/DEPTH TOP OF SAND: 692.14/8

ELEVATION/DEPTH TOP OF SCREEN: 690.14/10
TYPE OF SCREEN: PVC SLOTTED
SLOT SIZE x LENGTH: 020 X 10'
I.D. SCREEN: 2"

TYPE OF SAND PACK: BEST MEDIUM SAND

DIAMETER OF HOLE IN BEDROCK: 4"
CORE/REAM:

ELEVATION/DEPTH BOTTOM SCREEN: 680.14/20
ELEVATION/DEPTH BOTTOM OF SAND: 680.14/20
ELEVATION/DEPTH BOTTOM OF HOLE: 680.14/20
BACKFILL MATERIAL BELOW SAND:

ACAD:FORM_MWINBR.dwg 07/20/99 INL

Tetra Tech NUS, Inc.

BORING LOG

PROJECT NAME: Crane NSWC
PROJECT NUMBER: 9060
DRILLING COMPANY: BOWSER-MORNER
DRILLING RIG: CME 550 ATV

BORING No.: 13MWT33
DATE: 11-6-03
GEOLOGIST: M. G. COCHRAN
DRILLER: J. WALSH

Sample No. and Type or RQD	Depth (Ft.) or Run No.	Blows / 6" or RQD (%)	Sample Recovery / Sample Length	Lithology Change (Depth/Ft.) or Screened Interval	Soil Density/ Consistency or Rock Hardness	Color	Material Classification	USCS *	Remarks	PID/FID Reading (ppm) Sample	Sampler BZ	Borehole**	Driller BZ**
	0												
S1		2/4	1.5/		LOOSE	DK BRN	CLAYEY SILT	SM	DAMP, LOOKS NAT	0	0	0	0
	2	6/7	2.0				TR SAND @ BTM						
S2		7/9	1.5/		M DENSE	LT BRN	SANDY SILT	SM	DAMP. LOOKS NAT.	0	0	0	0
	4	9/12	2.0										
S3		6/7	1.1/		M DENSE	LT BRN	SILT, TR CLAY	SM	DAMP,	0	0	0	0
	6	8/13	2.0										
S4		10/12	1.7/		M DENSE	LT BRN	SILT, MICACEOUS	SM		0	0	0	0
	8	18/26	2.0										
S5		28/46	1.3/		V. DENSE	LT BRN	SILTY SAND/	SM	FE STAINED LAMINATED AT BTM,	0	0	0	0
	10	38/100/5"	2.0	10.0			SAPROLITE						
C1			3.9/										
13.9/		39/6	10.0		SOFT	DK GREY	SHALE,		DAMP, SLIGHT FE STAINING IN 1 VERT FRAC AT BTM.	0	0	0	0
10.0									BLOCKY				
							TD 20'						

* When rock coring, enter rock brokeness.

** Include monitor reading in 6 foot intervals @ borehole. Increase reading frequency if elevated reponse read.

Drilling Area Background (ppm): 0

Remarks: HSA TO 10' 4¼ ID. 8½ OD. 4" A.R. CORE FROM 10' TO TD. 2" H2O IN HOLE AT BTM OF RUN

Converted to Well: Yes ✓ No _____ Well I.D. #: _____

WELL NO.: 13MWT34

Tetra Tech NUS, Inc.

BEDROCK MONITORING WELL SHEET
WELL INSTALLED IN BEDROCK

PROJECT NWSC CRANE	LOCATION CRANE IN.	DRILLER BOWSER-MORNER
PROJECT NO. 9060	BORING 13MWT34	DRILLING METHOD HSA/AR
DATE BEGUN 11-11-03	DATE COMPLETED 11-11-03	
FIELD GEOLOGIST M.G. COCHRAN		DEVELOPMENT METHOD BAILER/SURGE/PUMP
GROUND ELEVATION 693.35	DATUM NAVD	

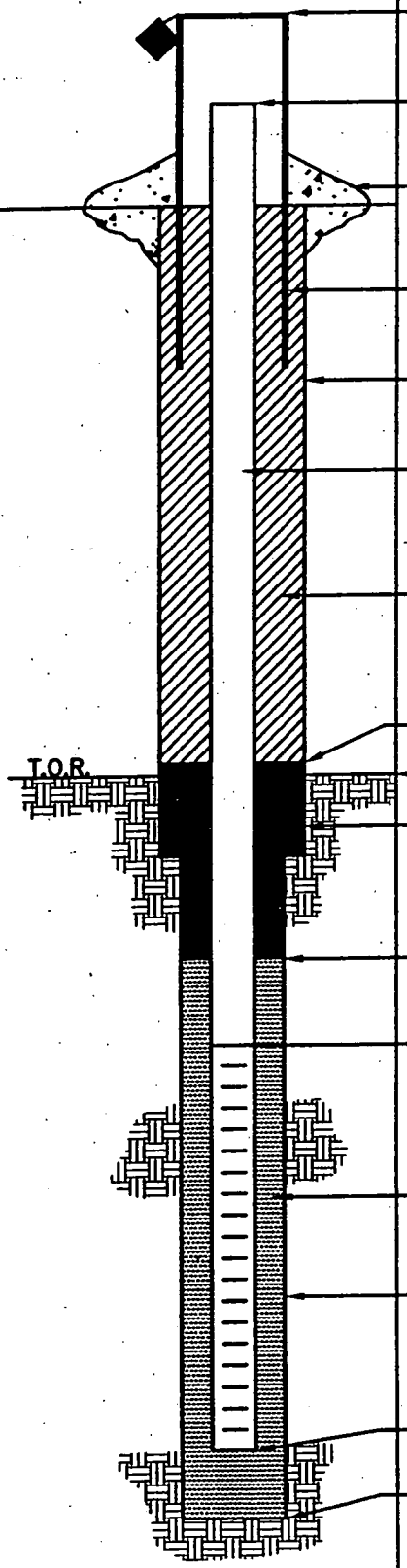

ELEVATION/HEIGHT OF TOP OF SURFACE CASING: 695.83/2.5

ELEVATION/HEIGHT TOP OF RISER: 695.93/2.5

TYPE OF SURFACE SEAL: CONCRETE

I.D. OF SURFACE CASING: 4" x 4" SQ

DIAMETER OF HOLE: 8 1/2 TO 10', 4" TO TD

RISER PIPE I.D.: 2"

TYPE OF RISER PIPE: PVC SCHEDULE 40

TYPE OF BACKFILL: CETCO PURE GOLD MEDIUM BENTONITE CHIPS

ELEVATION/DEPTH TOP OF SEAL: 690.35/3

ELEVATION/DEPTH TOP OF BEDROCK: 687.35/6

TYPE OF SEAL: CETCO PURE GOLD MEDIUM BENTONITE CHIPS

ELEVATION/DEPTH TOP OF SAND: 685.35/8

ELEVATION/DEPTH TOP OF SCREEN: 683.35/10

TYPE OF SCREEN: PVC SLOTTED

SLOT SIZE x LENGTH: .020 X 10'

I.D. SCREEN: 2"

TYPE OF SAND PACK: GLOBAL MEDIUM SAND

DIAMETER OF HOLE IN BEDROCK: 4"

CORE/REAM:

ELEVATION/DEPTH BOTTOM SCREEN: 673.35/20

ELEVATION/DEPTH BOTTOM OF SAND: 672.85/20.5

ELEVATION/DEPTH BOTTOM OF HOLE: 672.85/20.5

BACKFILL MATERIAL BELOW SAND: N/A

ACAD:FORM_MWINBR.dwg 07/28/99 INL

Tetra Tech NUS, Inc.

BORING LOG

PROJECT NAME: Crane NSWC
PROJECT NUMBER: 9060
DRILLING COMPANY: BOWSER MORNER
DRILLING RIG: CME 550 ATV

BORING No.: 13MWT34
DATE: 11-11-03
GEOLOGIST: M.G. COCHRAN
DRILLER: J. WALSH

Sample No. and Type or RQD	Depth (Ft.) or Run No.	Blows / 6" or RQD (%)	Sample Recovery / Sample Length	Lithology Change (Depth/Ft.) or Screened Interval	MATERIAL DESCRIPTION: Soil Density/ Consistency or Rock Hardness	Color	Material Classification	USCS*	Remarks	PID/FID Reading (ppm): Sample	Sampler BZ	Borehole**	Driller BZ**
						BRN BL	SILT		FILL, BORING LOCATED IN REMEDIATION AREA FILL - 4'	-	-	.6	0
	4												
S1		10/10	.9/			RD BRN	SILTY SAND	SM	LOOKS NTL	.6	0	.6	0
	6	47/50	2.0	6.0					WEATHERED SS @ BTM				
	8												
S2		18/50/4	.4/			LT GREY	SHALY SILTSTONE		DAMP WEATHERED.	.6	.6	.6	.6
	10		.7										
									17 IT H_2O @ 12.5'				
							TD 20.5'						

* When rock coring, enter rock brokeness.

** Include monitor reading in 6 foot intervals @ borehole. Increase reading frequency if elevated reponse read.

Drilling Area Background (ppm): 0.1

Remarks: 8 1/2 OD 4 1/4 ID HSA TO 10', 4" ROLLER BIT TO TD.

Converted to Well: Yes ✓ No _____ Well I.D. #: 13MWT34

WELL NO.: 13MWT35

Tetra Tech NUS, Inc.

BEDROCK MONITORING WELL SHEET WELL INSTALLED IN BEDROCK

PROJECT NSWC CRANE	LOCATION CRANE, IN	DRILLER BOWSER MORNER
PROJECT NO. 9060	BORING 13MWT35	DRILLING METHOD SONIC / A.R.
DATE BEGUN 10-28-03	DATE COMPLETED 11-19-03	DEVELOPMENT METHOD PUMP/BAILER SURGE
FIELD GEOLOGIST M.G. COCHRAN		
GROUND ELEVATION 679.51	DATUM NAVD 88	

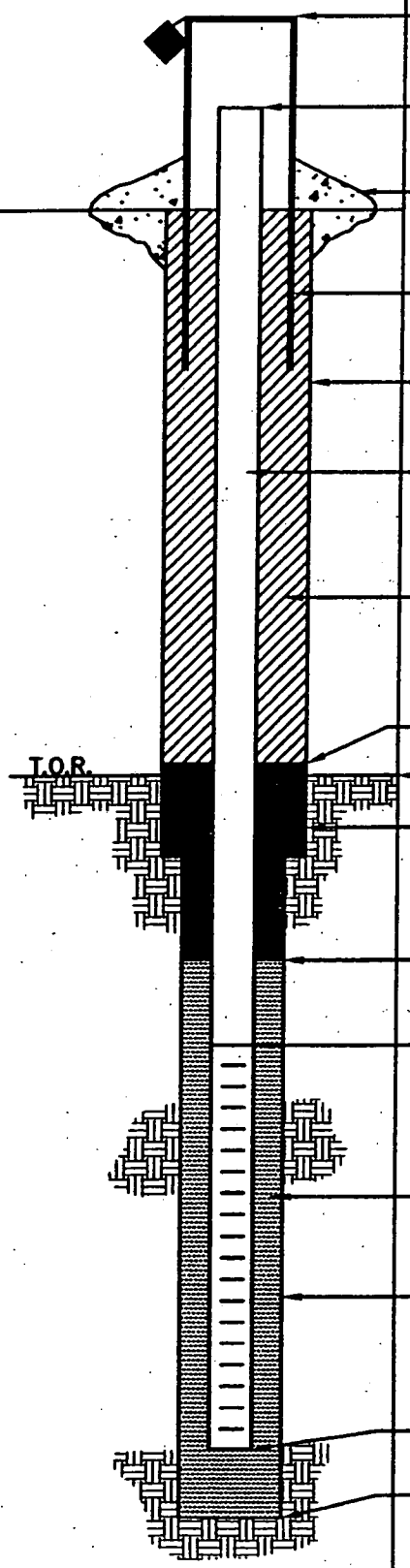

ELEVATION/HEIGHT OF TOP OF SURFACE CASING: 681.73/2.22

ELEVATION/HEIGHT TOP OF RISER: 681.73/2.22

TYPE OF SURFACE SEAL: CONCRETE

I.D. OF SURFACE CASING: 4" x 4" SQ

DIAMETER OF HOLE: 8 1/2 IN

RISER PIPE I.D.: 2"

TYPE OF RISER PIPE: PVC SCH 40

TYPE OF BACKFILL: CETCO VOLCLAY COARSE CHIPS

ELEVATION/DEPTH TOP OF SEAL: 676.51/3

ELEVATION/DEPTH TOP OF BEDROCK: 672.51/7

TYPE OF SEAL: CETCO VOLCLAY COARSE CHIPS

ELEVATION/DEPTH TOP OF SAND: 624.51/55

ELEVATION/DEPTH TOP OF SCREEN: 622.51/57

TYPE OF SCREEN: PVC SLOTTED

SLOT SIZE x LENGTH: .020 X 10'

I.D. SCREEN: 2"

TYPE OF SAND PACK: MED QTZ SAND

DIAMETER OF HOLE IN BEDROCK: 4"

CORE/REAM:

ELEVATION/DEPTH BOTTOM SCREEN: 612.51/67

ELEVATION/DEPTH BOTTOM OF SAND: 610.51/69

ELEVATION/DEPTH BOTTOM OF HOLE: 610.51/69

BACKFILL MATERIAL BELOW SAND: NA

ACAD: FORM_MWINBR.dwg 07/28/99 INL

Tetra Tech NUS, Inc.

BORING LOG

PROJECT NAME: Crane NSWC
PROJECT NUMBER: 9060
DRILLING COMPANY: BOWSER MORNER
DRILLING RIG: VERSA-SONIC

BORING No.: 13MWT35
DATE: 10-28-03
GEOLOGIST: FRED WRAMSER
DRILLER: JON K.

Sample No. and Type or RQD	Depth (Ft.) or Run No.	Blows / 6" or RQD (%)	Sample Recovery / Sample Length	Lithology Change (Depth/Ft.) or Screened Interval	MATERIAL DESCRIPTION: Soil Density/ Consistency or Rock Hardness	Color	Material Classification	USCS *	Remarks	PID/FID Reading (ppm): Sample	Sampler BZ	Borehole**	Driller BZ**
									YEL-BRN				
									MOTTLED GREY 0-10'				
									10-20 YEL BRN CHANGING TO				
	19								MED BRN GREY TO 20'	2			
	20				MED	GREY	SAND STONE	BR	TRACE AMOUNT				0
					HARD		MED BEDDED		CHARCOAL/PLANT FOSSILS				
					SOFT	DK	IRREGULAR LAMINATION						
						GREY	SILT + CLAY W/ ROCK FRAG.		FRAGS = SHALE SILTSTONE				
					MED SOFT		SILT STONE ALT LAMINATION BLK	V.BR	BLK = CHARCOAL GREY = SILTSTONE	5			0
S-1	25	15%			HARD	GREY	+ GREY SAND STONE		TRACE				
1048							MED BEDDED		CHARCOAL/ PLANT FOSSIL				
							W/IRREGULAR LAM.						
							SILT STONE ALT		CHARCOAL	6			0
			8 10'				LAMINATION BLK+GREY	V.BR	+ SILTSTONE				
	30				MED SOFT	DK	ALT V. THIN BEDS	V.BR	W/PLANT FOSSILS				
						GREY	OF SILT + SAND STONE		AND CHARCOAL				
							- CHARCOAL LAYER @ 31-32'		BRITTLE				
										3			0
S-2		10%			SOFT	BLK	TO DK GREY MUDSTONE	BR	ISOLATION				
1100	35						MED F. BEDDING		CASING INSTALLED				
							W/LAM.		TO 39'BGS				
							- V. WEATHERED			2.1			0
	39												
	40												

* When rock coring, enter rock brokeness.
** Include monitor reading in 6 foot intervals @ borehole. Increase reading frequency if elevated reponse read.

Drilling Area Background (ppm): 0

Remarks: STARTED W/ ADVANCE 8" DRILL PIPE 0-10' BEGIN TO USE H_2O @ 10' DEEP WELL

Converted to Well: Yes ✓ No ____ Well I.D. #: 13MWT35

Tetra Tech NUS, Inc.

BORING LOG

PROJECT NAME: Crane NSWC
PROJECT NUMBER: 90160
DRILLING COMPANY: BOWSER-MORNER
DRILLING RIG: CME 550 ATV

BORING No.: 13MWT35
DATE: 11-19-03
GEOLOGIST: M.G. COCHRAN
DRILLER: J. WALSH

Sample No. and Type or RQD	Depth (Ft.) or Run No.	Blows / 6" or RQD (%)	Sample Recovery / Sample Length	Lithology Change (Depth/Ft.) or Screened Interval	Soil Density/ Consistency or Rock Hardness	Color	Material Classification	USCS*	Remarks	PID/FID Reading (ppm) Sample	Sampler BZ	Borehole**	Driller BZ**
	40												
				41	M HARD	LT GREY	SANDSTONE			0	0	0	0
					SOFT	LT GREY	SHALY SILTSTONE		V.F. LAMS, SLIGHT FISSLE, DAMP,				
C1									BROKEN, HOR. FRACS,				
9.5/		95%	10.0/										
10.0			10.0						VERT FRACS @ 45' + 46',				
									DRY ALONG FRAC FACES				
					SOFT	LT GREY	SILTSTONE		MORE BLOCKY THAN ABOVE				
	49												
									H2O IN HOR. VERT FRACS @ 51-53'				
C2													
9.0/		90%	10.0/		SOFT	LT GREY	SILTSTONE		LOCALIZED SHALY ZONES,	0	0	0	0
10.0			10.0						MOSTLY DAMP EXCEPT 51-53'				
									BLOCKY				
	59												
						DK GREY	SHALE		SATURATED, FISSLE, V. BR.				
				62.5									
						LT GREY	SANDSTONE		LOW ∠ FRACS THRU OUT				

* When rock coring, enter rock brokeness.

** Include monitor reading in 6 foot intervals @ borehole. Increase reading frequency if elevated reponse read.

Remarks:

Drilling Area Background (ppm): 0

Converted to Well: Yes ✓ No ____ Well I.D. #: 13MWT35

Tetra Tech NUS, Inc.

BORING LOG

PROJECT NAME: Crane NSWC
PROJECT NUMBER: 9060
DRILLING COMPANY: BOWSER MORNER
DRILLING RIG: CME 550

BORING No.: 13MWT35
DATE: 11-19-03
GEOLOGIST: M. G. COCHRAN
DRILLER: J. WALSH

Sample No. and Type or RQD	Depth (Ft.) or Run No.	Blows / 6" or RQD (%)	Sample Recovery / Sample Length	Lithology Change (Depth/Ft.) or Screened Interval	MATERIAL DESCRIPTION: Soil Density/ Consistency or Rock Hardness	Color	Material Classification	USCS *	Remarks	PID/FID Reading (ppm): Sample	Sampler BZ	Borehole**	Driller BZ**
C3									SATURATED TO 67; DRY	0	0	0	0
1.0/		10%	9.5/						67-69'				
10.0			10.0										
	69												
							TD 69.0'						

* When rock coring, enter rock brokeness.
** Include monitor reading in 6 foot intervals @ borehole. Increase reading frequency if elevated reponse read.

Drilling Area Background (ppm): 0

Remarks: 8" IN BTM OF HOLE @ 69' AFTER 1 HR STANDBY

Converted to Well: Yes ✓ No _____ Well I.D. #: 13MWT35

WELL NO.: 13MWT36

Tetra Tech NUS, Inc.

BEDROCK MONITORING WELL SHEET WELL INSTALLED IN BEDROCK

PROJECT CRANE	LOCATION CRANE IN	DRILLER J. WALSH
PROJECT NO.	BORING 13MWT36	DRILLING METHOD HSA / A.R.
DATE BEGUN 11-5-03	DATE COMPLETED 11-5-03	
FIELD GEOLOGIST M.G. COCHRAN		DEVELOPMENT METHOD BAILER/ SURGE/PUMP
GROUND ELEVATION 664.91	DATUM NAVD 88	

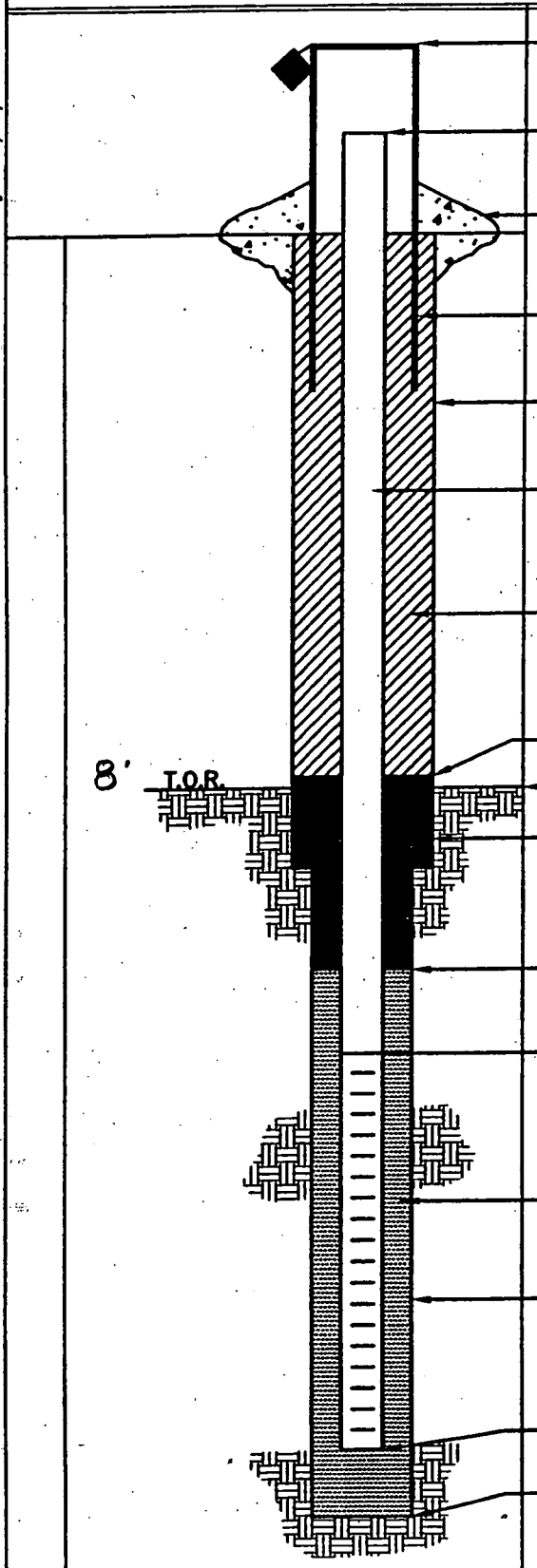

ELEVATION/HEIGHT OF TOP OF SURFACE CASING: 667.17/2.26

ELEVATION/HEIGHT TOP OF RISER: 667.21/2.3

TYPE OF SURFACE SEAL: CONCRETE

I.D. OF SURFACE CASING: 4"x4" SQ STEEL

DIAMETER OF HOLE: 8 1/2" TO 8'. 4" TO TD

RISER PIPE I.D.: 2"

TYPE OF RISER PIPE: PVC SCH 40

TYPE OF BACKFILL: BENTONITE CHIPS

ELEVATION/DEPTH TOP OF SEAL: 661.91/3

ELEVATION/DEPTH TOP OF BEDROCK: 656.91/8

TYPE OF SEAL: CETCO PURE GOLD BENTONITE CHIPS

ELEVATION/DEPTH TOP OF SAND: 651.91/13

ELEVATION/DEPTH TOP OF SCREEN: 649.91/15

TYPE OF SCREEN: PVC SCH 40

SLOT SIZE x LENGTH: .020 X 10'

I.D. SCREEN: 2"

TYPE OF SAND PACK: GLOBAL MEDIUM SAND

DIAMETER OF HOLE IN BEDROCK: 4"

CORE/REAM:

ELEVATION/DEPTH BOTTOM SCREEN: 639.91/25

ELEVATION/DEPTH BOTTOM OF SAND: 638.91/26

ELEVATION/DEPTH BOTTOM OF HOLE: 638.91/26

BACKFILL MATERIAL BELOW SAND:

ACAD: FORM_MWINBR.dwg 07/20/99 INL

Tetra Tech NUS, Inc.

BORING LOG

PROJECT NAME: Crane NSWC
PROJECT NUMBER: 9060
DRILLING COMPANY: BOWSER-MORNER
DRILLING RIG: CME 550

BORING No.: 13MWT36
DATE: 11-5-03
GEOLOGIST: M. G. COCHRAN
DRILLER: J. WALSH

Sample No. and Type or RQD	Depth (Ft.) or Run No.	Blows / 6" or RQD (%)	Sample Recovery / Sample Length	Lithology Change (Depth/Ft.) or Screened Interval	MATERIAL DESCRIPTION: Soil Density/ Consistency or Rock Hardness	Color	Material Classification	USCS*	Remarks	PID/FID Reading (ppm): Sample	Sampler BZ	Borehole**	Driller BZ**
	0												
						BRN	SILT + CLAY		AAMA NATURAL	–	–	0	0
									REFER TO LOG OF 13MWT37 FOR LITH. OF AREA				
	5												
						BRN	SHALE ?						
	10												
	15												
	20												
	25						TD 26.0'						

* When rock coring, enter rock brokeness.

** Include monitor reading in 6 foot intervals @ borehole. Increase reading frequency if elevated reponse read.

Drilling Area Background (ppm): 0

Remarks: 4 1/4" ID 8 1/2" OD HSA TO REFUSAL AT 8'. 4" ROLLER BIT W A.R FROM 8' TO TD. LOGGED HOLE W/ DRILL CUTTINGS

Converted to Well: Yes ✓ No _____ Well I.D. #: 13MWT36

WELL NO.: 13MWT37

Tetra Tech NUS, Inc.

BEDROCK MONITORING WELL SHEET WELL INSTALLED IN BEDROCK

PROJECT: CRANE NSWC
PROJECT NO.: 9060
DATE BEGUN: 10-24-03
FIELD GEOLOGIST: FRED W. RAMSER
GROUND ELEVATION: 659.96

LOCATION: SWMU 13
BORING: 13MWT37
DATE COMPLETED: 10-24-03
DATUM: NAVD 88

DRILLER: JON KEIFER
DRILLING METHOD: ROTO-SONIC
DEVELOPMENT METHOD: BAILER/PUMP/SURGE

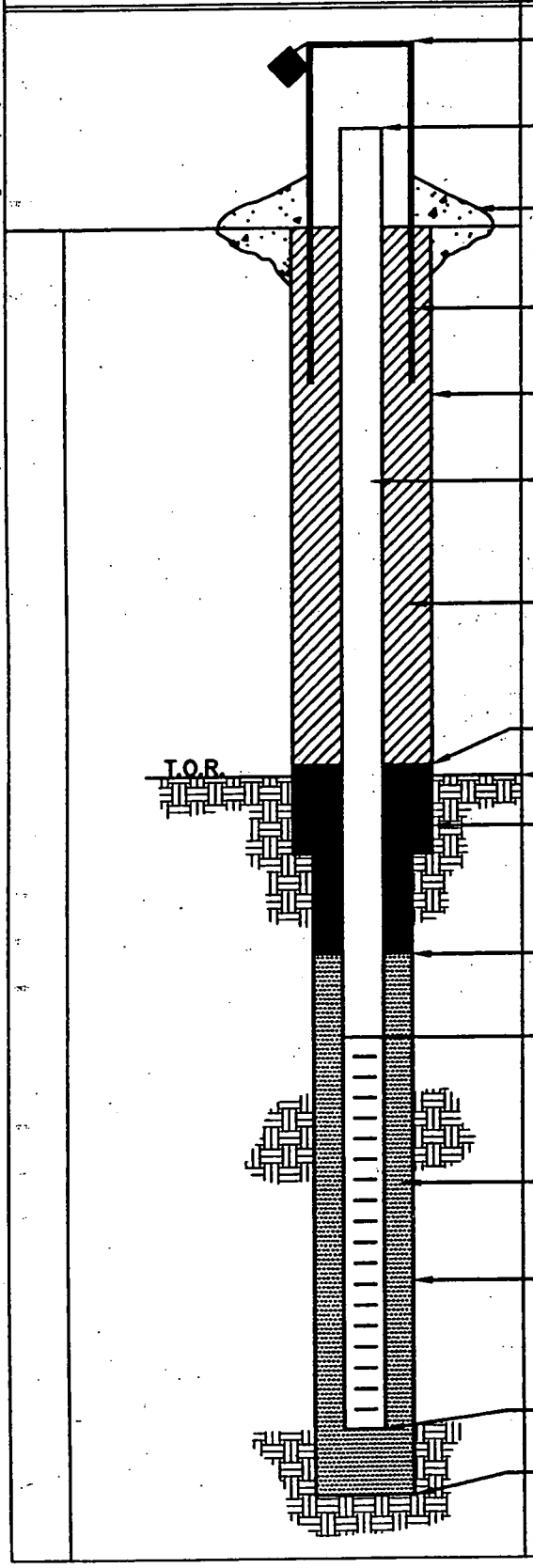

ELEVATION/HEIGHT OF TOP OF SURFACE CASING: 662.38/3.0

ELEVATION/HEIGHT TOP OF RISER: 662.29/2.5'

TYPE OF SURFACE SEAL: CONCRETE 4' x 4' x 6"

I.D. OF SURFACE CASING: 4" x 4" SQ

DIAMETER OF HOLE: 8"

RISER PIPE I.D.: 2"
TYPE OF RISER PIPE: SCH 40 PVC 2" Ø

TYPE OF BACKFILL: CEMENT/BENTONITE GROUT

ELEVATION/DEPTH TOP OF SEAL: 651.46/8.5

ELEVATION/DEPTH TOP OF BEDROCK: 650.16 9.8'

TYPE OF SEAL: BENTONITE CHIPS CETCO PURE GOLD

ELEVATION/DEPTH TOP OF SAND: 648.46/11.5

ELEVATION/DEPTH TOP OF SCREEN: 645.46/14.5
TYPE OF SCREEN: PVC
SLOT SIZE x LENGTH: 0.02 x 10'
I.D. SCREEN: 2"

TYPE OF SAND PACK: QTZ SAND 10/30 SEP / 18B

DIAMETER OF HOLE IN BEDROCK: ~~4"~~ FM ~5"
CORE/REAM: CORE

ELEVATION/DEPTH BOTTOM SCREEN: 635.46/24.5
ELEVATION/DEPTH BOTTOM OF SAND: 634.96/25.0
ELEVATION/DEPTH BOTTOM OF HOLE: 634.96/25.0
BACKFILL MATERIAL BELOW SAND:

ACAD:FORM_MWINBR.dwg 07/20/99 INL

Tetra Tech NUS, Inc.

BORING LOG

PROJECT NAME: Crane NSWC
PROJECT NUMBER: 9060
DRILLING COMPANY: BOWSER MORNER
DRILLING RIG: VERSA-SONIC

BORING No.: 13MWT37
DATE: 10-24-03
GEOLOGIST: FRED W. RAMSER
DRILLER: JON K

Sample No. and Type or RQD *	Depth (Ft.) or Run No.	Blows / 6" or RQD (%)	Sample Recovery / Sample Length	Lithology Change (Depth/Ft.) or Screened Interval	MATERIAL DESCRIPTION: Soil Density/ Consistency or Rock Hardness	Color	Material Classification	USCS *	Remarks	PID/FID Reading (ppm): Sample	Sampler BZ	Borehole**	Driller BZ**
					MED	MED	YEL BRN SILT + SAND	SM	DRY				
1S					DENSE				TRACE	0			
0910		NA				YEL BRN	SILT + SAND	SM	SANDSTONE CLASTS				
									MOTTLING IRON STAINING				
	5		5/5				DEC. BEDROCK		LAYERING DRY	0			
				TOP OF ROCK	SOFT	YEL BRN	SAND + SILT	VBR	WEATHERED ROCK				
							W/ ROCK FRAG.			0			
2S 940		NA											
					MED	PALE GREY	CLAY		PLASTIC	0			
	10		4.5/5		ENTE HARD	VERY LIGHT GREY	SAND STONE 9.8'		STRONGLY WEATHERED FE STAIN LAYERING				
					MED HARD		SAND STONE	BR					
							HOR + LOW ∆ FRACTURES		RARE HIGH ∆ FRAC				
3S							IRON STAINED						
0950	15	25%					CROSS BEDDING + HOR. LAYERING						
							VARIEGATED VERY PALE ORANGE TO DARK YELLOWISH ORANGE		COLOR ∆ OCCURS DOWNWARD DARKER/ ABUNDANT STAIN MAY BE INDICATION OF H_2O ~17'				
	20		2.0/10										
					MED		MOD YEL BRN	BR					
					HARD		SAND STONE						
S4 1010		0%					HOR + LOW ∆ FRAC.						
	25		2.5/5.0										

* When rock coring, enter rock brokeness.

** Include monitor reading in 6 foot intervals @ borehole. Increase reading frequency if elevated reponse read.

Drilling Area Background (ppm): —

Remarks: H_2O @ 11ft BGS 10-25-03

Converted to Well: Yes ✓ No _____ Well I.D. #: 13MWT37

WELL NO.: 13MWT38

Tetra Tech NUS, Inc.

BEDROCK MONITORING WELL SHEET WELL INSTALLED IN BEDROCK

PROJECT CRANE NSWC	LOCATION SWMU 13	DRILLER JON KEIFER
PROJECT NO. 9060	BORING 13MWT38	DRILLING METHOD ROTO-SONIC
DATE BEGUN 10-24-03	DATE COMPLETED 11-4-03	DEVELOPMENT METHOD BAILER/PUMP/SURGE
FIELD GEOLOGIST FRED W. RAMSER		
GROUND ELEVATION 659.03	DATUM NAVD 88	

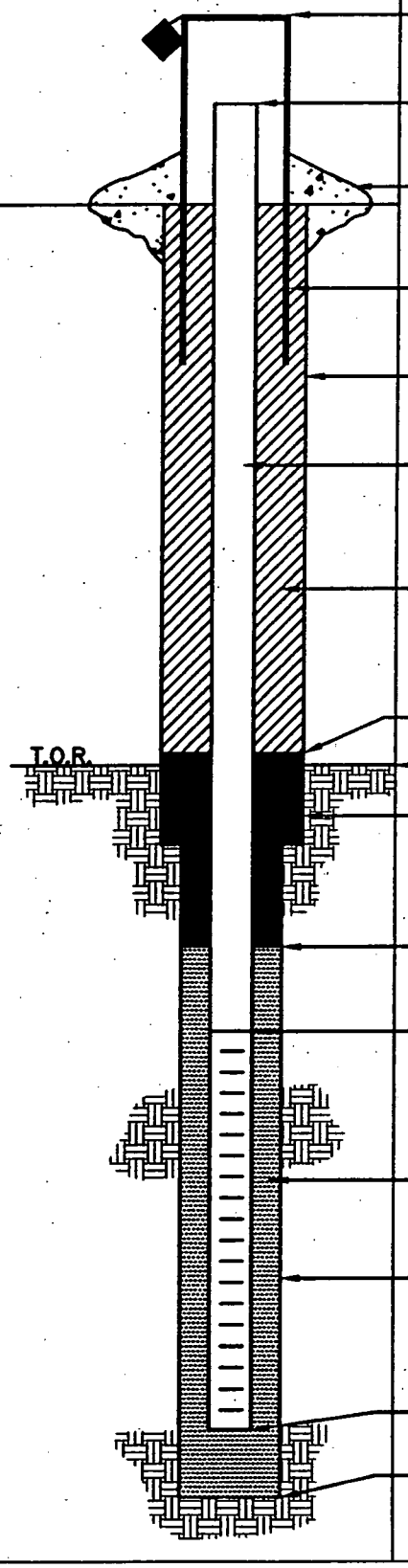

ELEVATION/HEIGHT OF TOP OF SURFACE CASING: 661.03/~3.0'

ELEVATION/HEIGHT TOP OF RISER: 661.04/~2.5'

TYPE OF SURFACE SEAL: 4' x 4' x 6" SQ CONCRETE PAD

I.D. OF SURFACE CASING: 4" x 4" SQ STEEL

DIAMETER OF HOLE: 11" DOWN TO 39'

ISOLATION CASING 6" DIA, DEPTH 39'

RISER PIPE I.D.: 2"

TYPE OF RISER PIPE: 2" PVC SCH. 40

TYPE OF BACKFILL: BENTONITE PURE GOLD CHIPS GEL CETCO

CEMENT/BENTONITE OUTSIDE OF ISO. CASING

ELEVATION/DEPTH TOP OF SEAL: 611.03/48'

ELEVATION/DEPTH TOP OF BEDROCK: 649.03/10'

TYPE OF SEAL: BENTONITE PURE GOLD CHIPS GEL CETCO

ELEVATION/DEPTH TOP OF SAND: 607.03/52

ELEVATION/DEPTH TOP OF SCREEN: 604.03/55

TYPE OF SCREEN: PVC SCH. 40

SLOT SIZE x LENGTH: .020 x 10'

I.D. SCREEN: 2"

TYPE OF SAND PACK: QTZ SAND 10/30 SEP 18/B

DIAMETER OF HOLE IN BEDROCK: 5" (BELOW ISO. CASING)

CORE/REAM: CORE

ELEVATION/DEPTH BOTTOM SCREEN: 594.03/65

ELEVATION/DEPTH BOTTOM OF SAND: 591.03/68

ELEVATION/DEPTH BOTTOM OF HOLE: 579.03/80

BACKFILL MATERIAL BELOW SAND: BENTONITE PURE GOLD CHIPS GEL CETCO

ACAD: FORM_MWINBR.dwg 07/28/99 INL

Tetra Tech NUS, Inc.

BORING LOG

PROJECT NAME: Crane NSWC
PROJECT NUMBER: 9060
DRILLING COMPANY: BOWSER MORNER
DRILLING RIG: VERSA-SONIC

BORING No.: 13MWT38
DATE: 10-24-03 / 11-4-03
GEOLOGIST: FRED W. RAMSER
DRILLER: DENNIS SINK

Sample No. and Type or RQD	Depth (Ft.) or Run No.	Blows / 6" or RQD (%)	Sample Recovery / Sample Length	Lithology Change (Depth/Ft.) or Screened Interval	Soil Density/ Consistency or Rock Hardness	Color	Material Classification	USCS*	Remarks	PID/FID Reading (ppm) Sample	Sampler BZ	Borehole**	Driller BZ**
					MED HARD	YEL BRN	(PALE) SANDSTONE	YBR	SEE LOG				
							IRON STAINING + LAYERING		13MWT37				
					MED	DK TO	SILTY SANDSTONE		FOR LITHO.				
					SOFT	MOD GREY	(25'-26' CLAY+SILT PLASTIC)		DESCRIPTION				
S1 1625	35	0%							OF 0'-25'				
					MED	LT	SANDSTONE						
	30		G 10		HARD	GREY							
					SOFT	DK	MUDSTONE W/	BR	DECOMPOSED				
						GREY	ROCK FRAGS +		ROCK, WET				
							COARSE SAND		-SLIGHTLY				
S-2			*				VERY		COHESIVE				
1640	35	30%					SOFT		STRONGLY WEATHERED				
									-MOIST				
					SOFT	GREYISH BLACK	MUDSTONE/						
							W ROCK FRAGS						
							VERY SOFT						
	40		9 10										
					SOFT	GREYISH BLK	MUDSTONE		STARTED 11-4-03				
							V. THIN BEDDED	TO Y.BR					
							-THINLY LAMINATED						
							-MOSTLY CLAY						
S-3	45						STONE						

* When rock coring, enter rock brokeness.

** Include monitor reading in 6 foot intervals @ borehole. Increase reading frequency if elevated reponse read.

Drilling Area Background (ppm): 0

Remarks: INSTALLED ~6" ISOLATION CASING 10-25-03 1000 HRS TO 39' BGS

Converted to Well: Yes ✓ No _____ Well I.D. #: 13MWT38

RUN | RECOVERY | RQD

Tetra Tech NUS, Inc.

BORING LOG

PROJECT NAME: Crane NSWC
PROJECT NUMBER: 9060
DRILLING COMPANY: BOWSER MORNER
DRILLING RIG: VERSA-SONIC

BORING No.: 13MWT38
DATE: 11-4-03
GEOLOGIST: FRED W RAMSER
DRILLER: JON KEIFER

Sample No. and Type or RQD	Depth (Ft.) or Run No.	Blows / 6" or RQD (%)	Sample Recovery / Sample Length	Lithology Change (Depth/Ft.) or Screened Interval	Soil Density/ Consistency or Rock Hardness	Color	Material Classification	USCS*	Remarks	PID/FID Reading (ppm) Sample	Sampler BZ	Borehole**	Driller BZ**
S-7		0%			SOFT	DK GREY/BLK	CLAY STONE	V.BR					
							LAM. TO			10			
							THINLY						0
	50		10/10				LAM.						
						BLK	CLAYSTONE	V.BR					
							- LAM. TO			12			
							THINLY LAM.						
					MED	LT GREY	SANDSTONE	BR					0
S-4	55	0%			HARD		- F grain						
							- THIN BEDDED						
							TO THINLY						
							LAM.			13			
													0
	60		7/10										
					MED HARD	LT GREY	SANDSTONE	BR					
							- F. GRAIN		OCC VUGS				
							COARSENING DOWN WARD TO M. GRAIN			10			
							~63'		SCREEN				
S-5	65	90					- THIN BEDDED		55'-65'				
							TO LAM.		52-68				
							- OCC PLANT FOSSIL		49				0
					MED	DK GREY	SILTSTONE	V.BR					
					HARD		- V.THIN BEDDED		68'				
	70		5/10				TO LAM.						

When rock coring, enter rock brokeness.
Include monitor reading in 6 foot intervals @ borehole. Increase reading frequency if elevated reponse read.

Drilling Area Background (ppm): 0

Remarks:

Converted to Well: Yes ✓ No _____ Well I.D. #: 13MWT38

Tetra Tech NUS, Inc.

BORING LOG

PROJECT NAME: Crane NSWC
PROJECT NUMBER: 9060
DRILLING COMPANY: BOWSER MORNER
DRILLING RIG: VERSA-SONIC

BORING No.: 13MWT38
DATE: 11-4-03
GEOLOGIST: FRED W RAMSER
DRILLER: JON KEIFFER

Sample No. and Type or RQD	Depth (Ft.) or Run No.	Blows / 6" or RQD (%)	Sample Recovery / Sample Length	Lithology Change (Depth/Ft.) or Screened Interval	MATERIAL DESCRIPTION: Soil Density/ Consistency or Rock Hardness	Color	Material Classification	USCS *	Remarks	PID/FID Reading (ppm): Sample	Sampler BZ	Borehole**	Driller BZ**
					MED	DK	MUDSTONE	VBK					
					SOFT	GRY	-THIN BEDDED						
						TO	TO V.THIN LAM.			10			
						BLK	-FINING DOWNWARD						
S6	75	0%											0
	80		10/10		HARD	GRY	SILTSTONE	BR	CALCITE FILLED FUGS				
									OCC FUGS/VOIDS				

* When rock coring, enter rock brokeness.

** Include monitor reading in 6 foot intervals @ borehole. Increase reading frequency if elevated reponse read.

Drilling Area Background (ppm): 0

Remarks:

Converted to Well: Yes ✓ No _____ Well I.D. #: 13MWT38

WELL NO.: 13MWT39

Tetra Tech NUS, Inc.

BEDROCK MONITORING WELL SHEET WELL INSTALLED IN BEDROCK

PROJECT CRANE NSWC	LOCATION SWMU 13	DRILLER JON KEIFER
PROJECT NO. 9060	BORING 13MWT39	DRILLING METHOD ROTO SONIC
DATE BEGUN 11-4-03	DATE COMPLETED 11-4-03	
FIELD GEOLOGIST FRED W RAMSER		DEVELOPMENT METHOD BAILER/PUMP/SURGE
GROUND ELEVATION 652.42	DATUM NAVD 88	

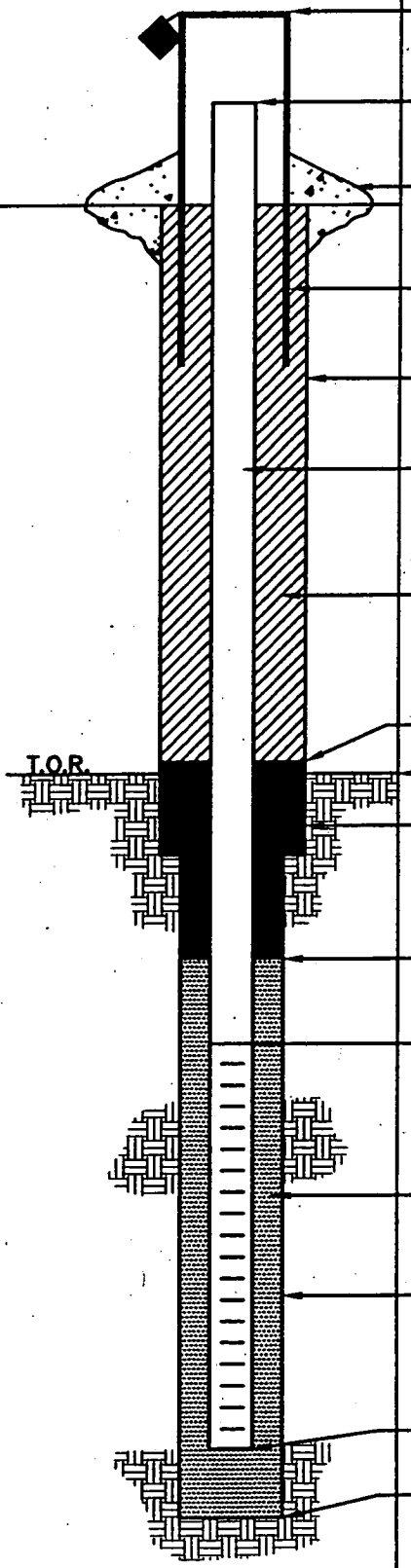

ELEVATION/HEIGHT OF TOP OF SURFACE CASING: 654.39/ ~3'

ELEVATION/HEIGHT TOP OF RISER: 654.44/ ~2.5'

TYPE OF SURFACE SEAL: 4' x 4' x 6" SQ CONCRETE PAD

I.D. OF SURFACE CASING: 4" x 4" SQ

DIAMETER OF HOLE: 8"

RISER PIPE I.D.: 2"
TYPE OF RISER PIPE: PVC SCH. 40

TYPE OF BACKFILL: BENTONITE CHIPS PUREGOLD CETCO GEL

ELEVATION/DEPTH TOP OF SEAL: 644.42/ 8

ELEVATION/DEPTH TOP OF BEDROCK: 649.42/ 3'

TYPE OF SEAL: BENTONITE CHIPS PUREGOLD CETCO GEL

ELEVATION/DEPTH TOP OF SAND: 641.42/ 11

ELEVATION/DEPTH TOP OF SCREEN: 638.42/ 14
TYPE OF SCREEN: PVC
SLOT SIZE x LENGTH: 0.020 x 10'
I.D. SCREEN: 2"

TYPE OF SAND PACK: QTZ SAND 10/30, SEP 18/B

DIAMETER OF HOLE IN BEDROCK: 5"
CORE/REAM: CORE

ELEVATION/DEPTH BOTTOM SCREEN: 628.42/ 24
ELEVATION/DEPTH BOTTOM OF SAND: 627.42/ 25
ELEVATION/DEPTH BOTTOM OF HOLE: 627.42/ 25
BACKFILL MATERIAL BELOW SAND: NONE

ACAD:FORM_MWINBR.dwg 07/28/99 INL

Tetra Tech NUS, Inc.

BORING LOG

PROJECT NAME: Crane NSWC
PROJECT NUMBER: 9060
DRILLING COMPANY: BOWSER MORNER
DRILLING RIG: VERSA-SONIC

BORING No.: 13MWT39
DATE: 11-9-03
GEOLOGIST: FRED W RAMSER
DRILLER: JON KEIFER

Sample No. and Type or RQD	Depth (Ft.) or Run No.	Blows / 6" or RQD (%)	Sample Recovery / Sample Length	Lithology Change (Depth/Ft.) or Screened Interval	Soil Density/ Consistency or Rock Hardness	Color	Material Classification	USCS *	Remarks	PID/FID Reading (ppm) Sample	Sampler BZ	Borehole**	Driller BZ**
						YEL	BRN SILT + CLAY						
							W/ SAND						
				TOP OF BDRK									
	5												
					MED SOFT	YEL	BRN SANDSTONE	V.BR					
							ABUN. Fe STAIN + LAM.						
S-1 1305		10%					CROSS BEDDING LAM.						0
	10		4/5				OCC. VUG/VOIDS	BR		10			
							MED & FRAC (RARE)						
													0
S-2	15	11%											
1315								V.BR					
										12			0
					SOFT	DK	GREY SILTSTONE	V.BR					
	20		8/10				MUDSTONE						
							SILTSTONE		SCREEN 14-24				
S-3							-ALT. BLK + GREY		SAND 11-25				
1355		0%					LAM.		BENTONITE				
					SOFT	BLK	COAL BRITTLE						
	25		4/5.0							13			

* When rock coring, enter rock brokeness.

** Include monitor reading in 6 foot intervals @ borehole. Increase reading frequency if elevated reponse read.

Drilling Area Background (ppm): –

Remarks:

Converted to Well: Yes ✓ No ____ Well I.D. #: 13MWT39

15" 1.1/10

WELL NO.: 13MWT40

Tetra Tech NUS, Inc.

BEDROCK MONITORING WELL SHEET WELL INSTALLED IN BEDROCK

PROJECT CRANE NSWC	LOCATION SWMU 13	DRILLER JON KELFER
PROJECT NO. 9060	BORING 13MWT40	DRILLING METHOD ROTO-SONIC
DATE BEGUN 10-22-03	DATE COMPLETED 10-23-03	DEVELOPMENT METHOD BAILER/ PUMP/ SURGE
FIELD GEOLOGIST FRED W. RAMSER		
GROUND ELEVATION 664.93	DATUM NAVD 88	

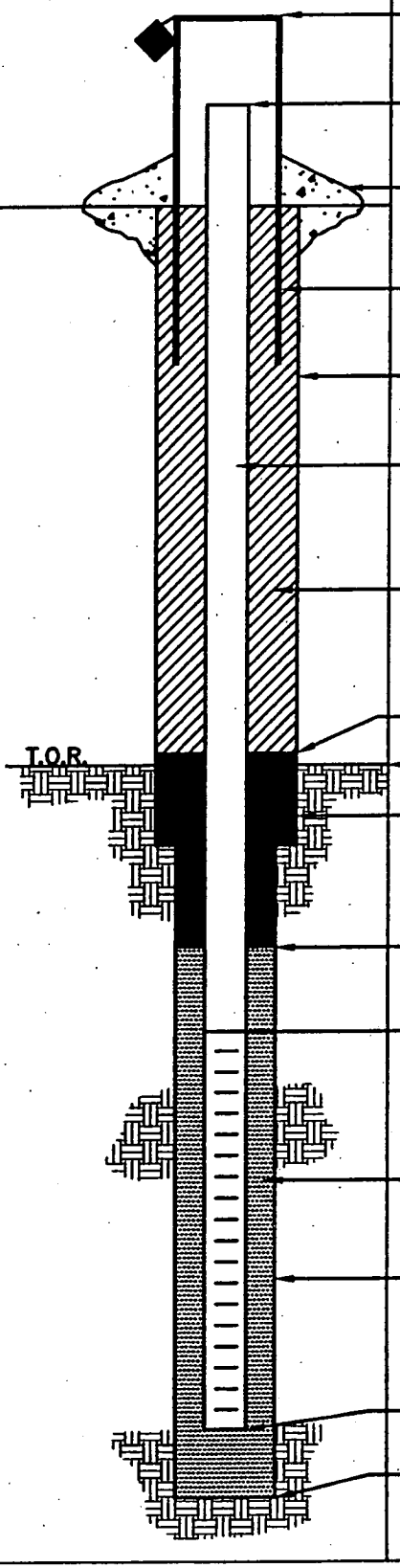

ELEVATION/HEIGHT OF TOP OF SURFACE CASING: 667.27/~3.0

ELEVATION/HEIGHT TOP OF RISER: 667.18/2.5

TYPE OF SURFACE SEAL: 4' x 4' x 6" CONCRETE

I.D. OF SURFACE CASING: 4" x 4" SQ

DIAMETER OF HOLE: 8"

RISER PIPE I.D.: 2"
TYPE OF RISER PIPE: SCH 40 PVC 2" Ø

TYPE OF BACKFILL: CEMENT/BENTONITE GROUT

ELEVATION/DEPTH TOP OF SEAL: 655.93/ 9'

ELEVATION/DEPTH TOP OF BEDROCK: 659.93/ 5'

TYPE OF SEAL: BENTONITE CHIPS CETCO PURE GOLD

ELEVATION/DEPTH TOP OF SAND: 652.93/12'

ELEVATION/DEPTH TOP OF SCREEN: 649.93/15'
TYPE OF SCREEN: PVC
SLOT SIZE x LENGTH: 0.02 x 10'
I.D. SCREEN: 2"

TYPE OF SAND PACK: QTZ SAND 10/30 SEP/ V8B

DIAMETER OF HOLE IN BEDROCK: ~~~4"~~ 5"
CORE/REAM: CORE

ELEVATION/DEPTH BOTTOM SCREEN: 639.93/25
ELEVATION/DEPTH BOTTOM OF SAND: 639.43/25.5
ELEVATION/DEPTH BOTTOM OF HOLE: 639.43/25.5
BACKFILL MATERIAL BELOW SAND: NONE

ACAD:FORM_MWINBR.dwg 07/20/99 INL

Tetra Tech NUS, Inc.

BORING LOG

PROJECT NAME: Crane NSWC
PROJECT NUMBER: 9060
DRILLING COMPANY: BOWSER MORNER
DRILLING RIG: VERSA-SONIC

BORING No.: 13MWT40
DATE: 10-22-03 / 10-23-03
GEOLOGIST: FRED W RAMSER
DRILLER: JON KEIFER

Sample No. and Type or RQD	Depth (Ft.) or Run No.	Blows / 6" or RQD (%)	Sample Recovery / Sample Length	Lithology Change (Depth/Ft.) or Screened Interval	Soil Density/ Consistency or Rock Hardness	Color	Material Classification	USCS*	Remarks	PID/FID Reading (ppm) Sample	Sampler BZ	Borehole**	Driller BZ**
S-1 1645						MED BRN	SILT + SAND	SM	TOPSOIL				
							↓						
			2.0 / 3.0			YEL BRN	WEATHERED SANDSTONE @ 2.5	SM					
S-2 1650	5	0%	2.0 / 2.0		SOFT		REDDISH BRN						
					↓	LT	YEL BRN WEATHERED SANDSTONE	↓	SOME IRON STAINING	15			
				BORK"	MED	VERY LT BRNISH GREY SANDSTONE		BR	MOTTLED				
					SOFT		IRON STAINING		CLAY LAYERC" @ 6.5'				0
S-3 0850		10%											
					MED SOFT	LT GREY	SILTY SANDSTONE	V.BR					
	10		3.5 / 5.0				- MED GREY		CLAY LAYERC" @ 9.5-10'	20			
							LAYERING		VERY SOFT				
							- CLAY PARTINGS + SILT						0
					↓		↓						
					MED	VERY LT BRNISH GREY		BR	CLAY LAYER				
S-4 0836	15	10%			SOFT		IRON STAINING		W/GRA.	15			
					MED		MOTTLED SAND STONE						
					HARD		ABUNDANT						0
							HOR. FRAC, TRACE		H_2O @ 25'				
							LOW ∠ FRAC		@ 0855 HRS				
	20		8.5 / 10		↓		DW BEDDING PLANE	↓	BELOW DRILL	3			
					MED		REDDISH ORANGE	BR	PLATFORM				
					HARD		SAND STONE		(PLATFORM)				
S-5 0815		0%							3.5' AGS				0
									@ 0900 23.5'				
	25		3.5 / 5						@ 0906 23'				

* When rock coring, enter rock brokeness.

** Include monitor reading in 6 foot intervals @ borehole. Increase reading frequency if elevated reponse read.

Drilling Area Background (ppm): 0

Remarks: BEGIN W/ 4" CORE PIPE (DRY), INSTALLED 6" CASING (TEMP) TO 5' BGS

Converted to Well: Yes ✓ No _____ Well I.D. #: 13MWT40

WELL NO.: 13MWT41

Tetra Tech NUS, Inc.

BEDROCK MONITORING WELL SHEET WELL INSTALLED IN BEDROCK

PROJECT CRANE NSWC	LOCATION SWMU 13	DRILLER JON KEIFER
PROJECT NO. 9060	BORING 13MWT41	DRILLING METHOD ROTO SONIC
DATE BEGUN 10-23-03	DATE COMPLETED 11-10-03	
FIELD GEOLOGIST FRED WRAMSER		DEVELOPMENT METHOD BAILER/PUMP/SURGE
GROUND ELEVATION 663.65	DATUM NAVD 88	

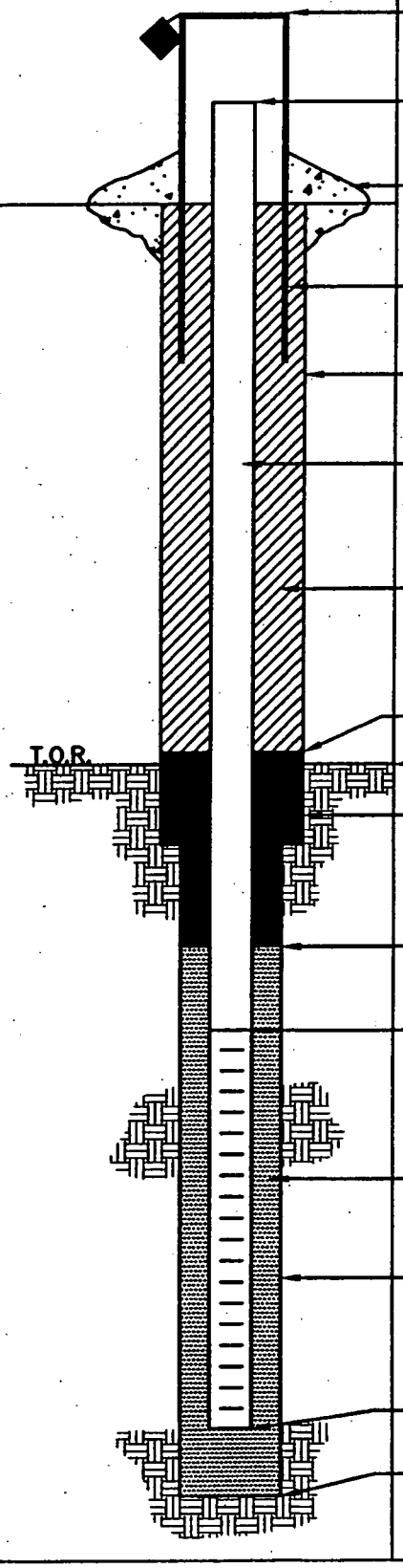

ELEVATION/HEIGHT OF TOP OF SURFACE CASING: 665.81/3.0

ELEVATION/HEIGHT TOP OF RISER: 665.67/2.5

TYPE OF SURFACE SEAL: CONCRETE 4' x 4' x 6"

I.D. OF SURFACE CASING: 4" x 4" SQ

DIAMETER OF HOLE: 11"

RISER PIPE I.D.: 2"
TYPE OF RISER PIPE: SCH. 40 PVC

TYPE OF BACKFILL: BENTONITE "PURE GOLD" CHIPS CETCO, 6" ISOLATION CASING INSTALLED USING CEMENT/BENTONITE GROUT TO 39.5'

ELEVATION/DEPTH TOP OF SEAL: 658.65/5'

ELEVATION/DEPTH TOP OF BEDROCK: 658.65/5'

TYPE OF SEAL: BENTONITE "PURE GOLD" CHIPS CETCO

ELEVATION/DEPTH TOP OF SAND: 611.65/52'

ELEVATION/DEPTH TOP OF SCREEN: 608.65/55'
TYPE OF SCREEN: PVC SCH.40
SLOT SIZE x LENGTH: 0.02 x 10'
I.D. SCREEN: 2"

TYPE OF SAND PACK: QTZ SAND 10/30 SEP/18 B

DIAMETER OF HOLE IN BEDROCK: 5"
CORE/REAM: CORE

ELEVATION/DEPTH BOTTOM SCREEN: 598.65/65'
ELEVATION/DEPTH BOTTOM OF SAND: 597.65/66'
ELEVATION/DEPTH BOTTOM OF HOLE: 597.65/66'
BACKFILL MATERIAL BELOW SAND: NONE

ACAD:FORM_MWINBR.dwg 07/29/99 INL

Tetra Tech NUS, Inc.

BORING LOG

PROJECT NAME: Crane NSWC
PROJECT NUMBER: 9060
DRILLING COMPANY: BOWSER MORNER
DRILLING RIG: VERSA-SONIC / CME 550

BORING No.: 13MWT41
DATE: 10-23-03
GEOLOGIST: FRED W RAMSKE
DRILLER: JOHN KEIFER

Sample No. and Type or RQD	Depth (Ft.) or Run No.	Blows / 6" or RQD (%)	Sample Recovery / Sample Length	Lithology Change (Depth/Ft.) or Screened Interval	MATERIAL DESCRIPTION: Soil Density/ Consistency or Rock Hardness	Color	Material Classification	USCS*	Remarks	PID/FID Reading (ppm): Sample	Sampler BZ	Borehole**	Driller BZ**
		50%			MED HARD	YEL BRN	SANDSTONE	BR	SEE LOG	10			
							LOW ∆ FRACS IRON STAINING LAYERING		FOR 13MWT40				
S-1 1345									FOR LITHO.	9.8			
		0%			MED SOFT	VERY LITE GREY	SILTY SANDSTONE	V.BR	DESCRIPTION				
	30		4.5/5						0' TO 25'	12.5			
					SOFT		LIGHT GREY SILT + SAND	V.BR	BGS.				
							GRADING TO CLAY + SILT @ ~32'			5			
									COHESIVE,				
						DARK GREY	CLAY + SILT	V.BR	PLASTIC				
S-2 1435	35						DECOMPOSED		W/TR SHALE				
		0%					MUDSTONE?		PARTINGS	9.2			
									INSTALLED				
			6.0/10						6" CASING TO				
									38'				
CT		86%	9.0		SOFT	DK GREY	SHALE,		BROKEN, DAMP,	0	0	0	0
			10.0						DRILL RATE 1'-				
									@ 8 MIN.				
									HOR BED				
									PLANE FRACS				
	50								THRU CORE				

* When rock coring, enter rock brokeness.

** Include monitor reading in 6 foot intervals @ borehole. Increase reading frequency if elevated reponse read.

Drilling Area Background (ppm): 0

Remarks: DRILL TO 25' WITH 8" DRILL PIPE, SET UP TO CORE @ 38' W ATV ON 11-4-04, REAMED OUT PLUG IN LOWER 10' OF HOLE PRIOR TO CORING, START CORING @ 40'

Converted to Well: Yes ✓ No _____ Well I.D. #: 13MW T41

Tetra Tech NUS, Inc.

BORING LOG

PROJECT NAME: Crane NSWC
PROJECT NUMBER: 9060
DRILLING COMPANY: RONSER-MORNER
DRILLING RIG: CME 550 ATV

BORING No.: 13 MWT 41
DATE: 11-4-03
GEOLOGIST: M. G. COCHRAN
DRILLER: J. WALSH

Sample No. and Type or RQD	Depth (Ft.) or Run No.	Blows / 6" or RQD (%)	Sample Recovery / Sample Length	Lithology Change (Depth/Ft.) or Screened Interval	Soil Density/ Consistency or Rock Hardness	Color	Material Classification	USCS *	Remarks	PID/FID Reading (ppm) Sample	Sampler BZ	Borehole**	Driller BZ**
	50				SOFT	DK GREY	SHALE		DAMP, THIN LAMINATED, DRILL RATE 5 MIN/FT, BROKEN				
C 2		94%	10'/	55.1						0	0	0	0
			10'		M. HARD	LT GREY	SANDSTONE		LOW & FRACS @ 1' INTERVALS, S MOIST ALONG FRACS + IN PORES FE STAINED IN FRACS + GREY LAMINATIONS @ EDGES IN CORE ~5MM THICK				
	60				M. HARD	LT. GREY	SANDSTONE	BR					
S-3		39%					PLANT FOSILS BLK LAMINATIONS ~~V. FINE BEDDING~~ LO & FRACS		IRREGULAR BEDDING				
	65				M. SOFT	LT GRY	SILTY SANDSTONE	V. BR					
	66		2.5/6.0										
							PLACE SCREEN @ 55 TO 65						

* When rock coring, enter rock brokeness.

** Include monitor reading in 6 foot intervals @ borehole. Increase reading frequency if elevated reponse read.

Drilling Area Background (ppm): 0

Remarks: STOPPED @ 60' ON 11-4-03. RESUMED DRILLING ON 11-5-03. LOST BIT @ 60', WILL OVER DRILL W/ ROTASONIC ~~RETRIEVE~~ BIT W/ 4" SON BIT USING ROTO SONIC RIG

Converted to Well: Yes ✓ No _____ Well I.D. #: 13 MWT41

WELL NO.: 13MWT42

Tetra Tech NUS, Inc.

BEDROCK MONITORING WELL SHEET WELL INSTALLED IN BEDROCK

PROJECT CRANE NSWC
PROJECT NO. 9060
DATE BEGUN 10-22-03
FIELD GEOLOGIST FRED W RAMSER
GROUND ELEVATION 668.05

LOCATION SWMU 13
BORING 13MWT42
DATE COMPLETED 10-22-03
DATUM NAVD 88

DRILLER JON KEIFER
DRILLING METHOD ROTO-SONIC
DEVELOPMENT METHOD BAILER/PUMP SURGE

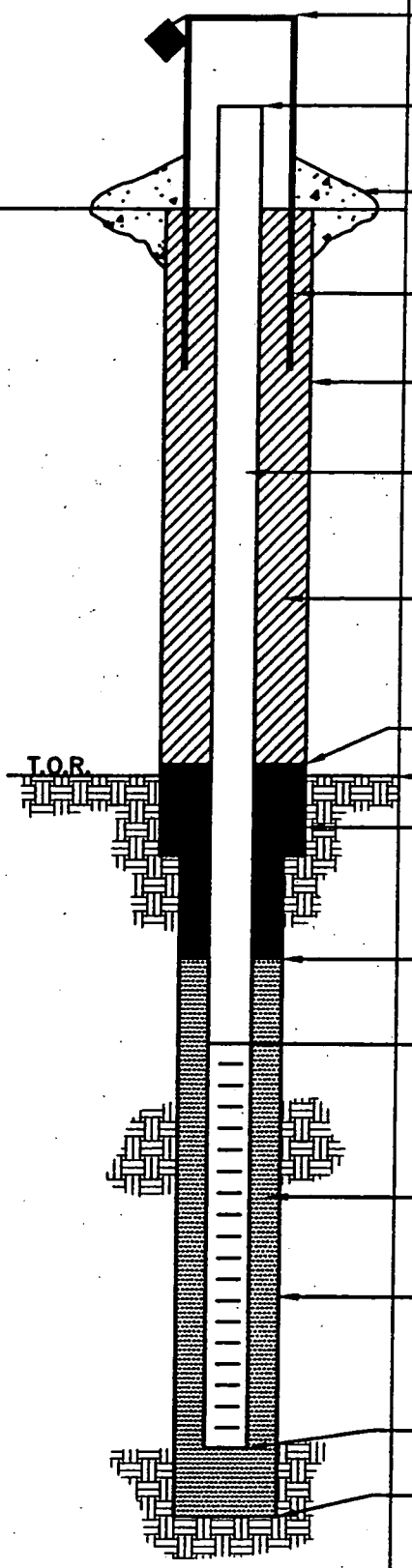

ELEVATION/HEIGHT OF TOP OF SURFACE CASING: 670.35/2.3

ELEVATION/HEIGHT TOP OF RISER: 670.31/2.26

TYPE OF SURFACE SEAL: CONCRETE 4'x4'x6"

I.D. OF SURFACE CASING: 4"x4"

DIAMETER OF HOLE: 8"

RISER PIPE I.D.: 2"
TYPE OF RISER PIPE: SCH. 40 PVC 2" Ø

TYPE OF BACKFILL: CEMENT/BENTONITE GROUT

ELEVATION/DEPTH TOP OF SEAL: 662.05/6'
ELEVATION/DEPTH TOP OF BEDROCK: 658.05/10'
TYPE OF SEAL: BENTONITE CHIPS CETCO PURE GOLD

ELEVATION/DEPTH TOP OF SAND: 659.05/9'

ELEVATION/DEPTH TOP OF SCREEN: 657.05/11'
TYPE OF SCREEN: PVC
SLOT SIZE x LENGTH: 0.02 x 10'
I.D. SCREEN: 2"

TYPE OF SAND PACK: QTZ SAND 10/30 SEP/18B

DIAMETER OF HOLE IN BEDROCK: ~~4.5~~ 5"
CORE/REAM: CORE

ELEVATION/DEPTH BOTTOM SCREEN: 647.05/21'
ELEVATION/DEPTH BOTTOM OF SAND: 643.05/25
ELEVATION/DEPTH BOTTOM OF HOLE: 643.05/25
BACKFILL MATERIAL BELOW SAND: NONE

ACAD:FORM_MWINBR.dwg 07/20/99 INL

Tetra Tech NUS, Inc.

BORING LOG

PROJECT NAME: Crane NSWC
PROJECT NUMBER: 9060
DRILLING COMPANY: BOWSER MORNER
DRILLING RIG: VERSA-SONIC

BORING No.: 13MWT42
DATE: 10-22-03
GEOLOGIST: FRED W. RAMSER
DRILLER: JON. KEIFER

Sample No. and Type or RQD	Depth (Ft.) or Run No.	Blows / 6" or RQD (%)	Sample Recovery / Sample Length	Lithology Change (Depth/Ft.) or Screened Interval	Soil Density/ Consistency or Rock Hardness	Color	Material Classification	USCS*	Remarks	PID/FID Reading (ppm) Sample	Sampler BZ	Borehole**	Driller BZ**
					MED		MED BRN	SC					
	2				DENSE		SILT + F g SAND	SC/SM	Fe STAINING				
1S							TR CLAY	SM	MOIST	2.6			
1015 HR	4				SOFT	YEL	WEATHERED						
	5		5.0 / 5.0			BRN	S.S.		MOTTLED GREY	7.5			
					SOFT	YEL	WEATHERED S.S		RQD NOT	10			
		0%				BRN	W/GRAY LAYERING		RELIABLE				
2S							LESS WEATHERING		DRILLING W/				
1025			4.0 / 4.0		MED SOFT		TO 10'		ROTOSONIC	21			
11:00 3S	10	0%	2.0 / 10				V.BR 5'-10'	V.BR	DESTROYS SAMPLE				
						LT			CORE. MOIST @				
					MED	YEL	SAND STONE BR	BR	10' NO H_2O	21			
					HARD	BRN	IRON STAINING/		IN HOLE @ 1045 HRS				
						+ GREY	LAYERING		MOTTLING				
	15								HOR FRACTURES	3.0			
3S 1443									* H_2O @ 22'.9" @ 1508				
									* H_2O @ 22' 4" @ 1516				
		20%							* H_2O @ 22' 3" @ 1524	3.0			
	20		8.5 / 10										
					MED	DK	GREY SILT STONE	V.BR	BLK MOTTLED	0.0			
5-4 1500		0%			SOFT		V.BR		SAND 25'-9'				
									SCREEN 21'-11'				
	25		3.5 / 5				TD @ 25'		BENT 6'-9'				

* When rock coring, enter rock brokeness.
** Include monitor reading in 6 foot intervals @ borehole. Increase reading frequency if elevated reponse read.

Drilling Area Background (ppm): —

Remarks: USE-4' CASING TO ADVANCE HOLE FOR 2" PVC WELL
INSTALLED TEMP 6" CASING 0-10' BGS
STARTED TO USE H_2O TO DRILL @ 10' @ 1430 HRS

Converted to Well: Yes ✓ No _____ Well I.D. #: 13MWT42

* MEASURED FROM TOP OF RIG PLATFORM (3' ABOVE GROUND SURFACE).
4" CORE PIPE ⇒ 5" HOLE 10' TO 25' 6" CASING ⇒ 7½ HOLE 0'-10'

WELL NO.: 13MWT43

Tetra Tech NUS, Inc.

BEDROCK MONITORING WELL SHEET WELL INSTALLED IN BEDROCK

PROJECT CRANE NSWC	LOCATION SWMU 13	DRILLER JON KEIFER
PROJECT NO. 9060	BORING 13MWT43	DRILLING METHOD ROTO-SONIC
DATE BEGUN 11-6-03	DATE COMPLETED 11-6-03	
FIELD GEOLOGIST FRED W. RAMSER		DEVELOPMENT METHOD BAILER/ PUMP/ SURGE
GROUND ELEVATION 688.88	DATUM NAVD 88	

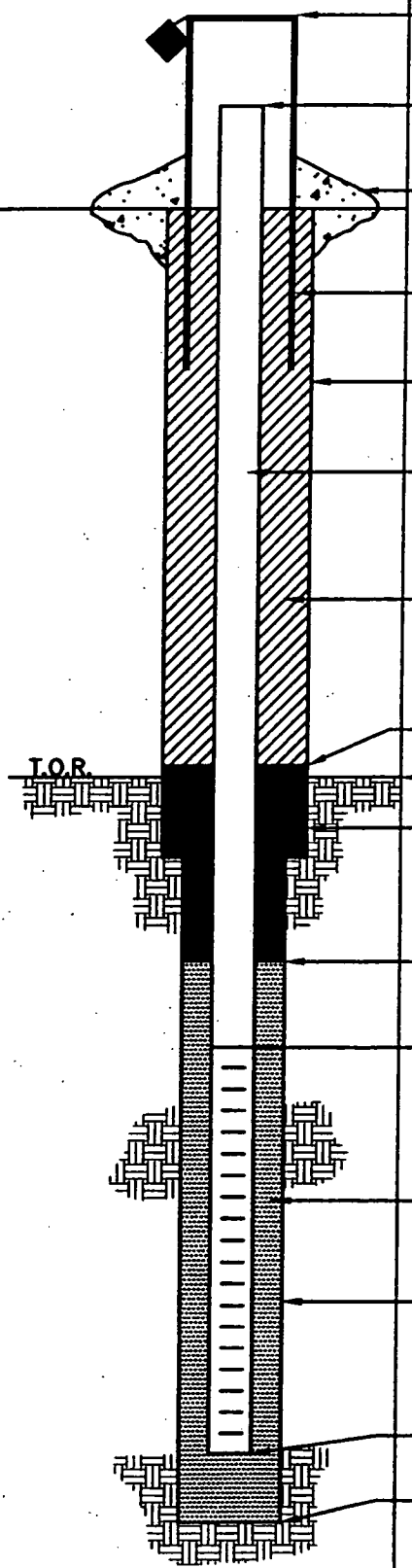

ELEVATION/HEIGHT OF TOP OF SURFACE CASING: 690.96/~3'

ELEVATION/HEIGHT TOP OF RISER: 690.90/-25'

TYPE OF SURFACE SEAL: 4'x4'x6" CONCRETE PAD

I.D. OF SURFACE CASING: 4"x4" SQ

DIAMETER OF HOLE: 8"

RISER PIPE I.D.: 2"

TYPE OF RISER PIPE: SCH.40 PVC

TYPE OF BACKFILL: BENTONITE PURE GOLD CETCO GEL

ELEVATION/DEPTH TOP OF SEAL: 683.88/ 5'

ELEVATION/DEPTH TOP OF BEDROCK: 678.88 / 10'

TYPE OF SEAL: BENTONITE PURE GOLD GEL CETCO

ELEVATION/DEPTH TOP OF SAND: 681.88/ 7'

ELEVATION/DEPTH TOP OF SCREEN: 678.88/10'

TYPE OF SCREEN: PVC

SLOT SIZE x LENGTH: 0.02 x10'

I.D. SCREEN: 2"

TYPE OF SAND PACK: QTZ SAND 10/30 SEP/18B

DIAMETER OF HOLE IN BEDROCK: ~5"

CORE/REAM: CORE

ELEVATION/DEPTH BOTTOM SCREEN: 668.88/ 20

ELEVATION/DEPTH BOTTOM OF SAND: 667.88/ 21'

ELEVATION/DEPTH BOTTOM OF HOLE: 667.88/ 21'

BACKFILL MATERIAL BELOW SAND: NONE

ACAD: FORM_MWINBR.dwg 07/20/99 INL

Tetra Tech NUS, Inc.

BORING LOG

PROJECT NAME: Crane NSWC
PROJECT NUMBER: 9060
DRILLING COMPANY: BOWSER MORNER
DRILLING RIG: VERSA-SONIC

BORING No.: 13MWT43
DATE: 11-06-03
GEOLOGIST: FRED WRAMSER
DRILLER: JON KEIFER

Sample No. and Type or RQD	Depth (Ft.) or Run No.	Blows / 6" or RQD (%)	Sample Recovery / Sample Length	Lithology Change (Depth/Ft.) or Screened Interval	Soil Density/ Consistency or Rock Hardness	Color	Material Classification	USCS*	Remarks	PID/FID Reading (ppm) Sample	Sampler BZ	Borehole**	Driller BZ**
						DK BRN	SILT + CLAY		TOP SOIL				
							YEL BRN						
							CLAY + SILT		LOG CUTTINGS				
							f-g SAND						
	5						MOTTLED			30			
							GREY						
							SILTY f-g SAND						0
							RELIC LAM.		DEC. BRK				
							LIGHT YEL BRN			8			
	10						GREY						
					MED SOFT	YEL	SAND STONE		WL=22' BTC				
					SOFT	BRN	DK GREY MUD		@ 1435 HRS				
							STONE		WL=21' 8" @				0
					SOFT	DK GREY	SILT STONE	Br	1445				
20%	15						- LAM. LGT GREY BLK		WL=21' 6" @				
							- IRREGULAR LAM.		1448				
							-		WL=21' 4" @	10			
									1452				
									1500, WL=21' 0"				
	20		8.5/10						MAKING H2O				
									OBSIDIAN				
							SCREEN 10-20		INSTALL WELL				
							SAND 7-21		10'-20'				
							BENT. 2-7						
	25												

* When rock coring, enter rock brokeness.

** Include monitor reading in 6 foot intervals @ borehole. Increase reading frequency if elevated reponse read.

Drilling Area Background (ppm): —

Remarks:

Converted to Well: Yes ✓ No _____ Well I.D. #: 13MWT43

WELL NO.: 13MWT44

Tetra Tech NUS, Inc.

BEDROCK MONITORING WELL SHEET WELL INSTALLED IN BEDROCK

PROJECT CRANE NSWC	LOCATION CRANE IN	DRILLER J WALSH
PROJECT NO. 9060	BORING 13MWT44	DRILLING METHOD A.R.
DATE BEGUN 11-6-03	DATE COMPLETED 11-10-03	
FIELD GEOLOGIST M.G. COCHRAN		DEVELOPMENT METHOD BAILER/PUMP SURGE
GROUND ELEVATION 682.11	DATUM NAVD 88	

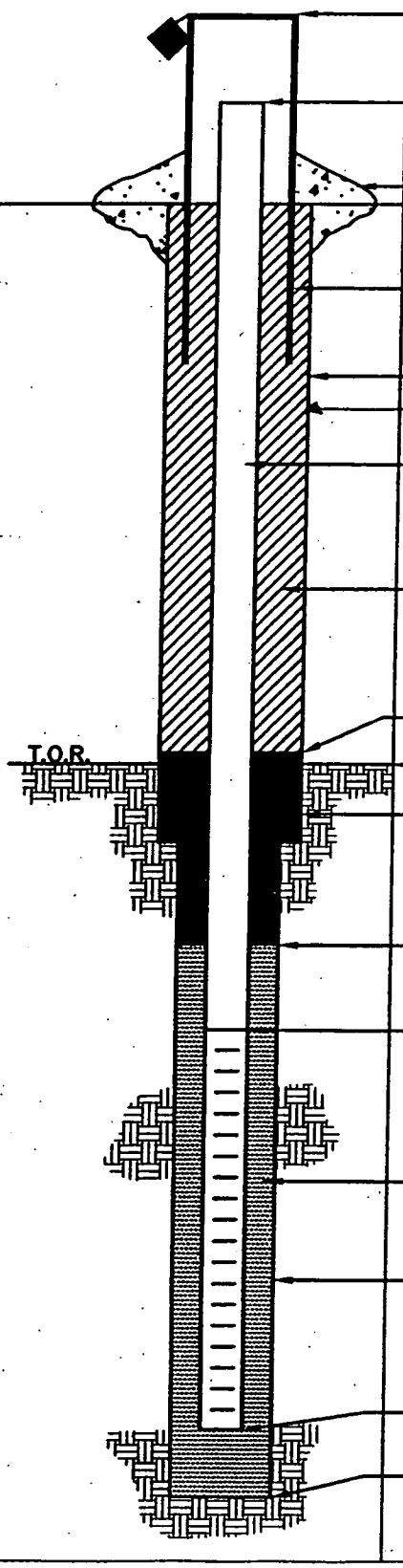

ELEVATION/HEIGHT OF TOP OF SURFACE CASING: 684.06/1.95

ELEVATION/HEIGHT TOP OF RISER: 683.82/1.71

TYPE OF SURFACE SEAL: CONCRETE

I.D. OF SURFACE CASING: 4" x 4" SQ STEEL

DIAMETER OF HOLE: 11" TO 40', 5 7/8" TO TD,
6" DIA ISOLATION CASING TO 40'

RISER PIPE I.D.: 2"
TYPE OF RISER PIPE: PVC SCHEDULE 40

TYPE OF BACKFILL: PURE GOLD MEDIUM BENTONITE CHIPS

ELEVATION/DEPTH TOP OF SEAL: 679.11/3'

ELEVATION/DEPTH TOP OF BEDROCK: 670.11/12'

TYPE OF SEAL: PURE GOLD MEDIUM BENTONITE CHIPS

ELEVATION/DEPTH TOP OF SAND: 612.11/70

ELEVATION/DEPTH TOP OF SCREEN: 609.11/73
TYPE OF SCREEN: PVC SLOTTED
SLOT SIZE x LENGTH: .020 X 10'
I.D. SCREEN: 2"

TYPE OF SAND PACK: GLOBAL MEDIUM SAND

DIAMETER OF HOLE IN BEDROCK: 5 7/8"
CORE/REAM: 3" / 5 7/8"

ELEVATION/DEPTH BOTTOM SCREEN: 599.11/83
ELEVATION/DEPTH BOTTOM OF SAND: 599.11/83
ELEVATION/DEPTH BOTTOM OF HOLE: 594.11/88'
BACKFILL MATERIAL BELOW SAND: PURE GOLD MEDIUM BENTONITE CHIPS

ACAD:FORM_MWINBR.dwg 07/20/99 INL

Tetra Tech NUS, Inc.

BORING LOG

PROJECT NAME: Crane NSWC
PROJECT NUMBER: 9060
DRILLING COMPANY: BOWSER MORNER
DRILLING RIG: VERSA-SONIC

BORING No.: 13MWT44
DATE: 11-6-03
GEOLOGIST: FRED W RAMSER
DRILLER: JON KEIFER

Sample No. and Type or RQD	Depth (Ft.) or Run No.	Blows / 6" or RQD (%)	Sample Recovery / Sample Length	Lithology Change (Depth/Ft.) or Screened Interval	Soil Density/ Consistency or Rock Hardness	Color	Material Classification	USCS*	Remarks	PID/FID Reading (ppm) Sample	Sampler BZ	Borehole**	Driller BZ**
					STIFF	MED BRN	SILT + CLAY	CL	MOIST				
							SILT CONTENT INC. DOWNWARD						
							- MOTTLED						
S-1	5						BRN		MOIST			0	
0900					MED DENSE	YEL	SILT + CLAY +	SM/SC	DEC. BDRK				
						BRN	f-g SAND		MOTTLED	10			
									YEL BRN + GREY				
						LT.	YEL BRN + GREY		LAM. STRONGLY				
	10		10/10				f-g SAND W/SOME SILT	SM	WEATHERED				
							MUD STONE		BDRK				
							- STRONGLY WEATHERED		VERY SOFT UNCONSOLIDATED				
				TOP OF BDRK	SOFT	YEL	SAND STONE	BR					
						BRN	- ABUNDANT Fe STAIN - THINLY BEDDED						
	15	15%				+ GREY	- INTERLAYERED			8		0	
S-2							W/STRONGLY WEATH.						
							SILT + CLAY STONE						
							-S.S. MOD						
							WEATHERED						
	20		8/10				SAND STONE LESS WEATHERED						
					MED HARD		@20'						
					SOFT		INTERLAYERED MUDSTONE	YBr					
							AND SAND STONE		MUDSTONE = DK GREY	10			
S-3							V. THINLY BEDDED + LAM.		SANDSTONE = LT GREY				
	25	20%										0	

* When rock coring, enter rock brokeness.

** Include monitor reading in 6 foot intervals @ borehole. Increase reading frequency if elevated reponse read.

Drilling Area Background (ppm): 0.0

Remarks: INSTALLED 6" ISOLATION CASING TO 40' BGS USING 11" DRILLPIPE.

Converted to Well: Yes ✓ No _____ Well I.D. #: _____

Tetra Tech NUS, Inc.

BORING LOG

PROJECT NAME: Crane NSWC
PROJECT NUMBER: 9060
DRILLING COMPANY: BOWSER MORNER
DRILLING RIG: VERSA-SONIC

BORING No.: 13MWT44
DATE: 11-6-03
GEOLOGIST: FRED W. RAMSER
DRILLER: JON KEIFER

Sample No. and Type or RQD	Depth (Ft.) or Run No.	Blows / 6" or RQD (%)	Sample Recovery / Sample Length	Lithology Change (Depth/Ft.) or Screened Interval	Soil Density/ Consistency or Rock Hardness	Color	Material Classification	USCS*	Remarks	PID/FID Reading (ppm) Sample	Sampler BZ	Borehole**	Driller BZ**
						MOD GREY	SANDSTONE	BR					
							ABUNDANT FE STAIN						
					SOFT	DK GREY	INTERLAYERED	VFR	M. STONE DK GREY S. STONE LT GRAY				
							MUD STONE AND SAND STONE						
	30		9/10										
												0	
					MED HARD	MOD GREY	SANDSTONE	BR					
							THINLY BEDDED			10			
							W/ BLK LAM.						
	35	5%					OCC VUGS						
										5		0	
	40		6/10										
					SOFT	DK GREY	SHALE		FISSILE SMALL H2O ON TOP OTHERWISE DRY				
									CORE RATE 3 MIN/FOOT. BLOCKY				
C-1		95%	10/							0	0	0	0
9.5/			10	46									
10					M. HARD	LT GREY	SILTSTONE		V.F. LAMS, STRAW IN WHITE. DRY CORE RATE 5 MIN/FOOT. BLOCKY				
	50												

* When rock coring, enter rock brokeness.

** Include monitor reading in 6 foot intervals @ borehole. Increase reading frequency if elevated reponse read.

Drilling Area Background (ppm): 0.0

Remarks: SET UP ON HOLE ON 11-10-03 TO DRILL THROUGH CASING W ATV RIG STARTING @ 40'

Converted to Well: Yes ✓ No _____ Well I.D. #: _____

Tetra Tech NUS, Inc.

BORING LOG

PROJECT NAME: Crane NSWC
PROJECT NUMBER: 9060
DRILLING COMPANY: BOWSER-MORNER
DRILLING RIG: CME 550 ATV

BORING No.: 13MWT44
DATE: 11-10-03
GEOLOGIST: M.G. COCHRAN
DRILLER: J. WALSH

Sample No. and Type or RQD	Depth (Ft.) or Run No.	Blows / 6" or RQD (%)	Sample Recovery / Sample Length	Lithology Change (Depth/Ft.) or Screened Interval	Soil Density/ Consistency or Rock Hardness	Color	Material Classification	USCS*	Remarks	PID/FID Reading (ppm) Sample	Sampler BZ	Borehole**	Driller BZ**
	50				M HARD	LT GREY	SILTSTONE		CORE 3 MIN/FT				
									V. F. LAMS.				
									STREAKS IN WHITE				
									DRY, HOR BEDDING				
									BECOMING SHALY				
									BLOCKY	0	0	0	0
C2													
9.5/		95%	10/	57					LOOKS MOIST @ 57'				
10.0			10		SOFT	LT GREY	SHALE		DRY, V. F LAMS WHITE STREAK,				
									HOR BEDDING				
									BLOCKY				
	60												
				61									
				67	M HARD	LT GREY	SANDSTONE		1 LOW & FRAC @ 61.5.				
					SOFT	BL	SHALE		DRY				
C3			8/						CORE SLIPPED				
7.4		94%	10						OUT OF BARREL				
				65.5					PER DRILLER	0	0	0	0
10.0									BLOCKY				
					M HARD	LT GREY	SILTSTONE						
									DRY, GRADES				
									INTO SS AT				
									BTM.				
	70			70.									
					SOFT	GREY	SHALY SILTSTONE		V. BROKEN,				
									FRACS THRU				
									OUT. SLIGHT				
									MOISTURE				
C4									THRU OUT. MOST				
10/		0%	8/						FRACS ARE				
10			8						HOR, FEW VERT FOSSILIFEROUS	0	0	0	0

* When rock coring, enter rock brokeness.

** Include monitor reading in 6 foot intervals @ borehole. Increase reading frequency if elevated reponse read.

Drilling Area Background (ppm): 0

Remarks: WAITED AFTER 70' FOR H2O. NO H2O IN HOLE AFTER 1 HR
H2O LEVEL @ 64' B.G.S. IN INSTALLED WELL ON 11-11-03

Converted to Well: Yes ✓ No _____ Well I.D. #: 13MWT44

Tetra Tech NUS, Inc.

BORING LOG

PROJECT NAME: Crane NSWC
PROJECT NUMBER: 9060
DRILLING COMPANY: BOWSER-MORNER
DRILLING RIG: CME 550 ATV

BORING No.: 13MWT44
DATE: 11-10-03
GEOLOGIST: M. G. COCHRAN
DRILLER: J. WALSH

Sample No. and Type or RQD	Depth (Ft.) or Run No.	Blows / 6" or RQD (%)	Sample Recovery / Sample Length	Lithology Change (Depth/Ft.) or Screened Interval	MATERIAL DESCRIPTION: Soil Density/ Consistency or Rock Hardness	Color	Material Classification	USCS*	Remarks	PID/FID Reading (ppm): Sample	Sampler BZ	Borehole**	Driller BZ**
	1				SOFT	GREY	SHALY SILTSTONE		V. BROKEN, FRACS THRU. OUT, HOR. FRAC FREQUENT VERT FRACS FEW, MOIST THRU RUN TO 82.5'				
	78												
C5			10/.							0	0	0	0
4.0/		40%	10										
10.0					MHARD	GREY	SHALY SILTSTONE		DRY, + BLOCKY AT 82.5				
				86									
	88				MHARD	LT GREY	SANDSTONE		V. F. LAMS ALONG HOR. BEDDING, DK GREY LAMS.				
							TD 88'						

* When rock coring, enter rock brokeness.

** Include monitor reading in 6 foot intervals @ borehole. Increase reading frequency if elevated reponse read.

Drilling Area Background (ppm): 0

Remarks: CHECKED FOR H2O AFTER 88', 1' OF H2O IN HOLE AFTER 1 HR.

Converted to Well: Yes ✓ No _____ Well I.D. #: 13MWT44

WELL NO.: 13MWT45

Tetra Tech NUS, Inc.

BEDROCK MONITORING WELL SHEET WELL INSTALLED IN BEDROCK

PROJECT CRANE NSWC	LOCATION SWMU 13	DRILLER JON KEIFER
PROJECT NO. 9060	BORING 13MWT45	DRILLING METHOD ROTA-SONIC
DATE BEGUN 10-27-03	DATE COMPLETED 11-10-03	
FIELD GEOLOGIST FRED W. RAMSER		DEVELOPMENT METHOD BAILER/ WATERA/SURGED
GROUND ELEVATION 688.76	DATUM NAVD 88	

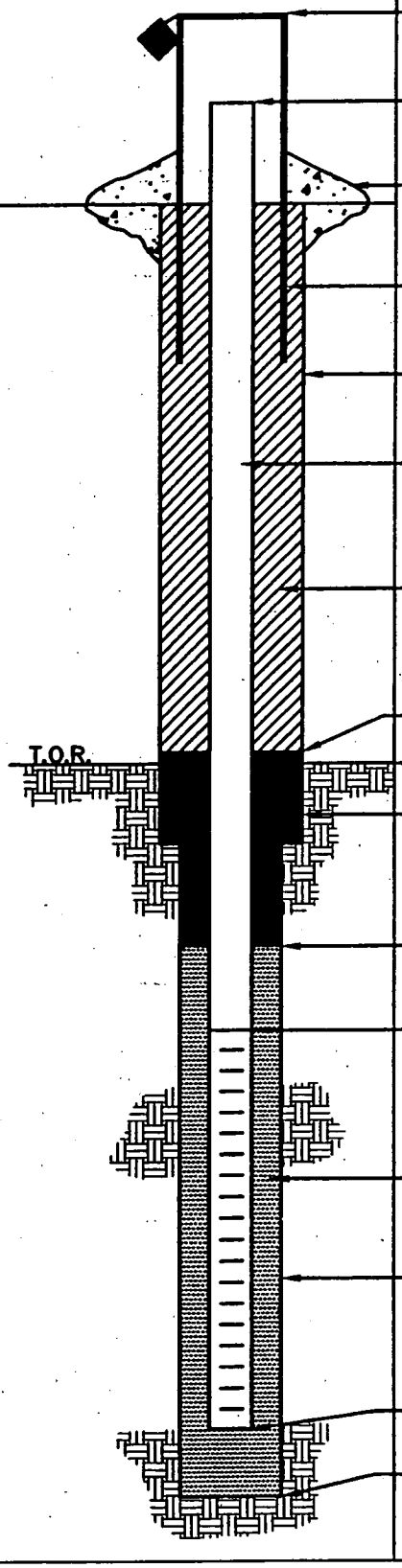

ELEVATION/HEIGHT OF TOP OF SURFACE CASING: 690.54 / 1.78

ELEVATION/HEIGHT TOP OF RISER: 690.59 / 1.83

TYPE OF SURFACE SEAL: CONCRETE 4' x 4' x 6"

I.D. OF SURFACE CASING: 4" x 4" SQ

DIAMETER OF HOLE: 11"

RISER PIPE I.D.: 2"
TYPE OF RISER PIPE: SCH. 40 PVC

TYPE OF BACKFILL: BENTONITE "PURE GOLD" CETCO. 6" ISOLATION CASING INSTALLED USING CEMENT/BENTONITE GROUT TO 39'

ELEVATION/DEPTH TOP OF SEAL: 683.76 / 5'

ELEVATION/DEPTH TOP OF BEDROCK: 678.76 / 10'

TYPE OF SEAL: BENTONITE "PURE GOLD" CHIPS CETCO

ELEVATION/DEPTH TOP OF SAND: 621.76 / 67

ELEVATION/DEPTH TOP OF SCREEN: 618.76 / 70
TYPE OF SCREEN: PVC SCH. 40
SLOT SIZE x LENGTH: 0.02 x 10'
I.D. SCREEN: 2"

TYPE OF SAND PACK: QTZ SAND 10/30 SEP / 18B

DIAMETER OF HOLE IN BEDROCK: 5"
CORE/REAM: CORE

ELEVATION/DEPTH BOTTOM SCREEN: 608.76 / 80
ELEVATION/DEPTH BOTTOM OF SAND: 604.76 / 84
ELEVATION/DEPTH BOTTOM OF HOLE: 604.76 / 84
BACKFILL MATERIAL BELOW SAND: NONE

ACAD: FORM_MWINBR.dwg 07/20/99 INL

Tetra Tech NUS, Inc.

BORING LOG

PROJECT NAME: Crane NSWC
PROJECT NUMBER: 9060
DRILLING COMPANY: BOWSER MORNER
DRILLING RIG: VERSA-SONIC

BORING No.: 13MWT45
DATE: 10-27-03
GEOLOGIST: FRED W. RAMSER
DRILLER: JON KEIFER

Sample No. and Type or RQD	Depth (FL) or Run No.	Blows / 6" or RQD (%)	Sample Recovery / Sample Length	Lithology Change (Depth/FL) or Screened Interval	Soil Density/ Consistency or Rock Hardness	Color	Material Classification	USCS*	Remarks	PID/FID Reading (ppm) Sample	Sampler BZ	Borehole**	Driller BZ**
									0-6' YEL BRN OCC MOTTLING				
									GRAY SILT + ~~fg sand~~ CUTTINGS YEL				
									BRN 6' TO ~ 15' BGS TURNING DK GREY				
									TO BLK DOWN TO 19' BGS				
	20				SOFT	BLK	COAL		BRITTLE				
					MED HARD	LT GREY	SILTSTONE	BR					
					VERY SOFT	LT GREY	CLAY W/ROCK FRAG.	↓	UNCONSOLIDATED				
					HARD		SANDSTONE	BR		10			
		0%					GRADING DOWN	↓					
S-1	25					↓	WARD TO	N.BR					
1555						RED	A LAMINATED						
						GREY	SILT STONE	↓					
					SOFT		CLAY + SILT + SAND W/OCCAS ROCK		UNCONSOLIDATED	12			
			8/10			↓	FRAG DK GREY		↓				
	30				MED HARD	LT.	SILT SANDSTONE						
					HARD	GREY	SAND STONE	BR	IRREGULAR LAMINATION				
					↓		POORLY BEDDED	↓		13			
S-2 1620		10%					↓						
	35				MED SOFT	DK	SILT STONE	V.DK					
						GREY	ALT. BLK + GREY						
							LAMINATIONS		SANDSTONE	5			
					SOFT	DK	SILT + CLAY +		CLASTS. UNCONSOLIDATED				
			6/10		↓	GREY	fg SAND	↓					
	40												

* When rock coring, enter rock brokeness.

** Include monitor reading in 6 foot intervals @ borehole. Increase reading frequency if elevated reponse read.

Drilling Area Background (ppm): —

Remarks: STARTED @ 0' USING AIR, SWITCHED TO WATER @ ~10' USING 8" DRILL PIPE AND SAMPLING. INSTALLED ISOLATION CASING 10-28-03 TO 39'

Converted to Well: Yes ✓ No _____ Well I.D. #: 13MWT45

Tetra Tech NUS, Inc.

BORING LOG

PROJECT NAME: Crane NSWC
PROJECT NUMBER: 9060
DRILLING COMPANY: BOWSER MORNER
DRILLING RIG: VERSA-SONIC

BORING No.: 13MWT45
DATE: 11-10-03
GEOLOGIST: FRED W. RAMSER
DRILLER: JON KEIFER

Sample No. and Type or RQD	Depth (Ft.) or Run No.	Blows / 6" or RQD (%)	Sample Recovery / Sample Length	Lithology Change (Depth/Ft.) or Screened Interval	MATERIAL DESCRIPTION: Soil Density/ Consistency or Rock Hardness	Color	Material Classification	USCS*	Remarks	PID/FID Reading (ppm): Sample	Sampler BZ	Borehole**	Driller BZ**
	40						DK GREY						
							(SILTSTONE)					2	0
	45												
												0	
							CUTTINGS TURN						
							YEL BRN SILT+						
	50						SAND						
							(SANDSTONE)						
												0	
	55												
							CUTTINGS DK GREY						
							SILT+CLAY						
					SOFT	DK GRAY	SILTSTONE	V.BR					
							LAM. VTHIN		FISSIL TO				
	60						BEDDING.		66'	11			
							CLAYEY 59'-61'						
S-B							SILTSTONE					0	
		10											
	65									12			

* When rock coring, enter rock brokeness.
** Include monitor reading in 6-foot intervals @ borehole. Increase reading frequency if elevated reponse read.

Drilling Area Background (ppm): —

Remarks: LOG CUTTINGS FROM 39' TO 57, BEGIN TO CORE @57 w/4" TO CORE PIPE.

Converted to Well: Yes ✓ No _____ Well I.D. #: 13MWT45

Tetra Tech NUS, Inc.

BORING LOG

PROJECT NAME: Crane NSWC
PROJECT NUMBER: 9060
DRILLING COMPANY: BOWSER MORNER
DRILLING RIG: VERSA-SONIC

BORING No.: 13MWT45
DATE: 11-10-03
GEOLOGIST: FRED W RAMSER
DRILLER: JON KEIFER

Sample No. and Type or RQD	Depth (Ft.) or Run No.	Blows / 6" or RQD (%)	Sample Recovery / Sample Length	Lithology Change (Depth/Ft.) or Screened Interval	Soil Density/ Consistency or Rock Hardness	Color	Material Classification	USCS*	Remarks	PID/FID Reading (ppm) Sample	Sampler BZ	Borehole**	Driller BZ**
	65						SILT STONE						
						DK	MUD STONE	B1					
			8 / 11			GREY	↓ POORLY BEDDED					0	
					VERY SOFT		NO RECOVERY		AS PER				
	70				BASED ON		CUTTINGS		DRY CORE				
					DRILL RATE		AND DRILL		RUNS FROM				
							RATE INDICATE		WELL 13MWT44				
S-4							(SHALE). TO		WILL INSTALL				
							78' BGS		WELL FROM				
	75								70' TO 80'				
									SAND: 67 - 84			0	
			0 / 10				↓						
							SILT STONE	V.BR					
	80						↓						
S-5		5%								11			
						GREY	SANDSTONE	B1				0	
							↓						
	85			TD-84									

* When rock coring, enter rock brokeness.

** Include monitor reading in 6 foot intervals @ borehole. Increase reading frequency if elevated reponse read.

Drilling Area Background (ppm): —

Remarks: INSTALLED WELL 70'-80'
SAND 67 - 84'

Converted to Well: Yes ✓ No _____ Well I.D. #: 13MWT45

WELL NO.: 13MW146

Tetra Tech NUS, Inc.

BEDROCK MONITORING WELL SHEET WELL INSTALLED IN BEDROCK

PROJECT NSWC CRANE	LOCATION SWMU 13	DRILLER J KEIFER
PROJECT NO. 9060	BORING 13MWT46	DRILLING METHOD ROTO-SONIC
DATE BEGUN 11/21/03	DATE COMPLETED 11/22/03	
FIELD GEOLOGIST S. GRIER		DEVELOPMENT METHOD BAILER/WATTERA/SURGE
GROUND ELEVATION 651.64	DATUM NAVD 88	

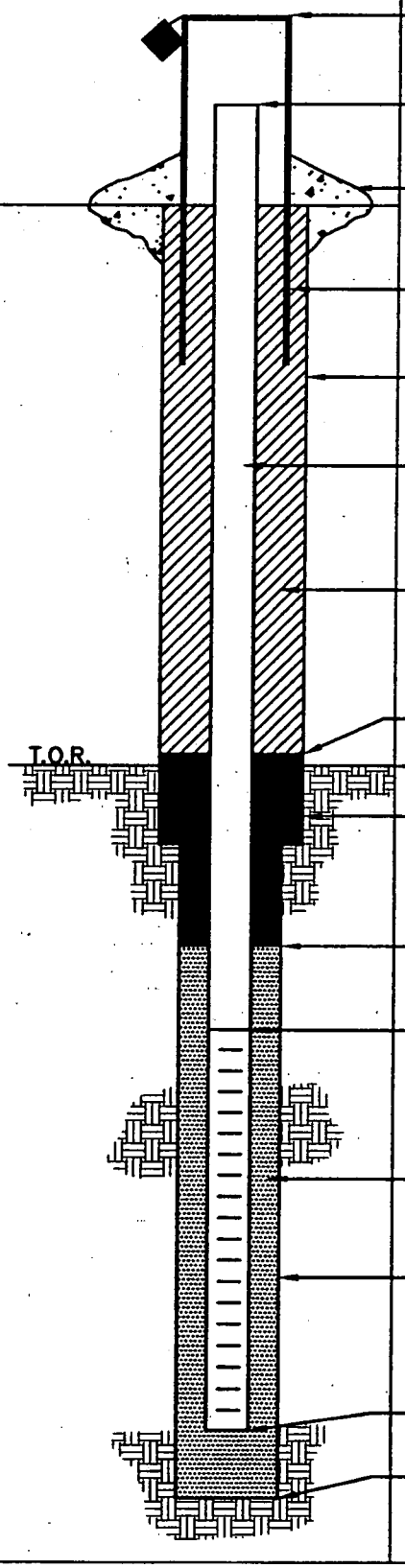

ELEVATION/HEIGHT OF TOP OF SURFACE CASING: 653.63/2.04

ELEVATION/HEIGHT TOP OF RISER: 653.61/1.97

TYPE OF SURFACE SEAL: CONCRETE

I.D. OF SURFACE CASING: 4" steel

DIAMETER OF HOLE: 11" down to 39'
ISOLATION CASING 6" dia. SET TO 39' BGS.

RISER PIPE I.D.: 2"
TYPE OF RISER PIPE: 2.5" PVC

TYPE OF BACKFILL: BENTONITE PURE GOLD
ISOLATION CASING GROUTED w/ CEMENT/BENTONITE SLURRY.

ELEVATION/DEPTH TOP OF SEAL: 648.64 / 3'

ELEVATION/DEPTH TOP OF BEDROCK: 648.64 / 3'

TYPE OF SEAL: BENTONITE PURE GOLD GEL CHIPS

ELEVATION/DEPTH TOP OF SAND: 599.64 / 52'

ELEVATION/DEPTH TOP OF SCREEN: 596.64 / 55'
TYPE OF SCREEN: PVC
SLOT SIZE x LENGTH: 20 x 10'
I.D. SCREEN: 2"

TYPE OF SAND PACK: GLOBAL MED. QTZ SAND

DIAMETER OF HOLE IN BEDROCK: 4"/5"
CORE/REAM:

ELEVATION/DEPTH BOTTOM SCREEN: 586.64 / 65'
ELEVATION/DEPTH BOTTOM OF SAND: 583.64 / 68'
ELEVATION/DEPTH BOTTOM OF HOLE: /
BACKFILL MATERIAL BELOW SAND: N/A

ACAD:FORM_MWINBR.dwg 07/20/99 INL

Tetra Tech NUS, Inc.

BORING LOG

PROJECT NAME: Crane NSWC
PROJECT NUMBER: 9060
DRILLING COMPANY: BOWSER MORNER
DRILLING RIG: VERSA-SONIC

BORING No.: 13 MWT 46
DATE: 11/21/03
GEOLOGIST: S. GRIER
DRILLER: J. REIFER

Sample No. and Type or RQD	Depth (Ft.) or Run No.	Blows / 6" or RQD (%)	Sample Recovery / Sample Length	Lithology Change (Depth/Ft.) or Screened Interval	Soil Density/ Consistency or Rock Hardness	Color	Material Classification	USCS*	Remarks	PID/FID Reading (ppm) Sample	Sampler BZ	Borehole**	Driller BZ**
	25												
					VERY SOFT TO MED SOFT	GR	CLAYSTONE + SILTSTONE LAYERS 40% CLAY	BR/VBR	CLAY IS VERY SOFT + WEATHERED SILT IS MORE COH.				
C1													
	28	25%	3/3						ROCK FRAGS ARE LARGEST				0.8
					MED TO MED. SOFT	GR/BLK	SILTSTONE W/ LAYERS OF SHALE	BR	THIN LAMS OF SHALE + ROCK FRAGS				
	30												
					VERY SOFT	GR	CLAYSTONE W/ POCKETS OF SILTSTONE	VBR	HIGHLY WEATHERED				
	35						SILTSTONE W/ Very thin lams of F.sand + shale	BR	V. THIN LAMS OF FINE SAND				
C2						GR	CLAYSTONE W/ LAYERS OF SHALE	VBR	LENSES OF SHALE				
	38	25%	10/10			GR	SILTSTONE W/ LAMS OF F.SAND + SHALE		ROCK CHIPS				159
									LOW RECOVERY PROBABLY				
	40								SILTSTONE				
	45												
					VERY SOFT	GR/BLUE	SILTSTONE		HIGHLY WEATHERED				
C3		14%											
	48		2.5/10										
									LOW RECOVERY				

* When rock coring, enter rock brokeness.

** Include monitor reading in 6 foot intervals @ borehole. Increase reading frequency if elevated reponse read.

Drilling Area Background (ppm): 0.6

Remarks: VERY LOW RECOVERY BETWEEN 40' → 68'
HIGHLY FRACTURED ROCK
6" ISOLATION CASING SET TO 39' BGS.

Converted to Well: Yes ✓ No _____ Well I.D. #: 13 MWT 46

Tetra Tech NUS, Inc.

BORING LOG

PROJECT NAME: Crane NSWC
PROJECT NUMBER: 9060
DRILLING COMPANY: BOWSER MORNER
DRILLING RIG: VERSA-SONIC

BORING No.: 13 MWT 46
DATE: 11/22/03
GEOLOGIST: S. GRIER
DRILLER: J. KEIFER

Sample No. and Type or RQD	Depth (Ft.) or Run No.	Blows / 6" or RQD (%)	Sample Recovery / Sample Length	Lithology Change (Depth/Ft.) or Screened Interval	Soil Density/ Consistency or Rock Hardness	Color	Material Classification	USCS*	Remarks	PID/FID Reading (ppm) Sample	Sampler BZ	Borehole**	Driller BZ**
	50	5					SILTSTONE		LOW RECOVERY				
							↓						
	55												0.7
				HARD	VERY HARD	YELLOW GR	SANDSTONE		FINE GRAINED				
C4									LOW RECOVERY				
		0%	15/10										
	60												
							↓						
	65				VERY SIFT	GREY BLUE	SILTSTONE		Screen set @ 65'-55'				1
C5					VERY HARD	YELLOW BLUE	SANDSTONE						
	68	0%											

* When rock coring, enter rock brokeness.

** Include monitor reading in 6 foot intervals @ borehole. Increase reading frequency if elevated reponse read.

Remarks: HIGHLY FRACTURED BETWEEN 40'-68'

Drilling Area Background (ppm): 0.6

Converted to Well: Yes ✓ No _____ Well I.D. #: 13 MWT 46

WELL NO.: 13MWT47

Tetra Tech NUS, Inc.

BEDROCK MONITORING WELL SHEET WELL INSTALLED IN BEDROCK

PROJECT: NWSC CRANE	LOCATION: CRANE, IN	DRILLER: BOWSER MORNER
PROJECT NO.: 9060	BORING: 13MWT47	DRILLING METHOD: HSA/AR
DATE BEGUN: 11-19-03	DATE COMPLETED: 11-20-03	DEVELOPMENT METHOD: BAILER/PUMP/SURGE
FIELD GEOLOGIST: M. G. COCHRAN		
GROUND ELEVATION: 675.41	DATUM: NAVD 88	

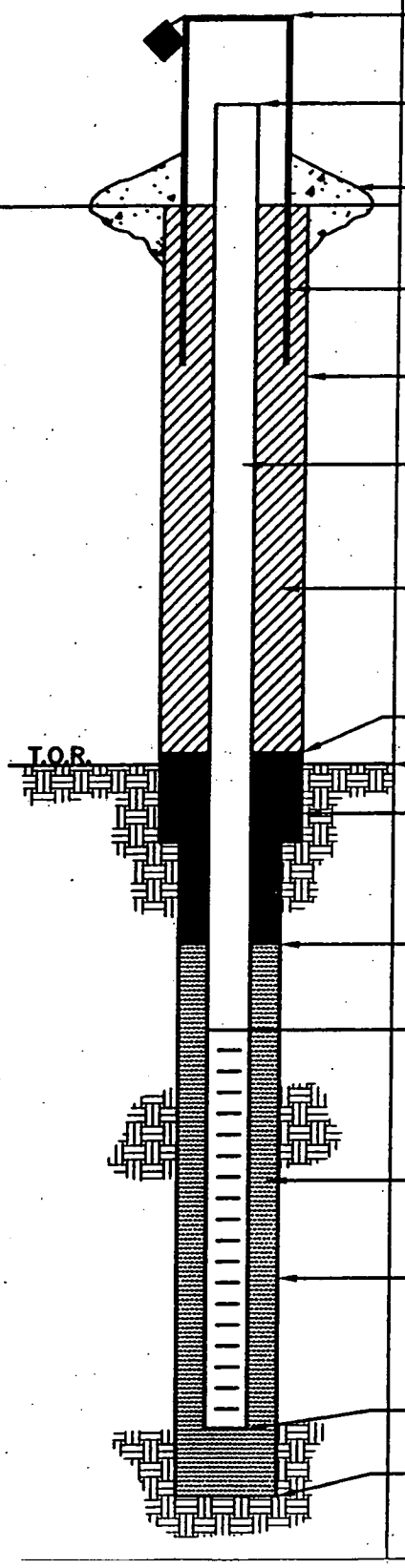

ELEVATION/HEIGHT OF TOP OF SURFACE CASING: 677.34/1.91

ELEVATION/HEIGHT TOP OF RISER: 677.23/1.82

TYPE OF SURFACE SEAL: CONCRETE

I.D. OF SURFACE CASING: 4"x4" SQ.

DIAMETER OF HOLE: 8 1/2 TO 4', 4" TO TD

RISER PIPE I.D.: 2"
TYPE OF RISER PIPE: PVC SCH. 40

TYPE OF BACKFILL: CETCO VOLCLAY BENTONITE CHIPS

ELEVATION/DEPTH TOP OF SEAL: 672.41/3'

ELEVATION/DEPTH TOP OF BEDROCK: 671.41/4'

TYPE OF SEAL: CETCO VOLCLAY BENTONITE CHIPS

ELEVATION/DEPTH TOP OF SAND: 669.41/6

ELEVATION/DEPTH TOP OF SCREEN: 667.41/8
TYPE OF SCREEN: PVC SLOTTED
SLOT SIZE x LENGTH: .020 X 10'
I.D. SCREEN: 2"

TYPE OF SAND PACK: BEST MEDIUM SAND

DIAMETER OF HOLE IN BEDROCK: 4"
CORE/REAM: —

ELEVATION/DEPTH BOTTOM SCREEN: 657.41/18
ELEVATION/DEPTH BOTTOM OF SAND: 654.41/21
ELEVATION/DEPTH BOTTOM OF HOLE: 654.41/21
BACKFILL MATERIAL BELOW SAND: N/A

ACAD:FORM_MWNBR.dwg 07/28/99 INL

Tetra Tech NUS, Inc.

BORING LOG

PROJECT NAME: Crane NSWC
PROJECT NUMBER: 9060
DRILLING COMPANY: BOWSER MORNER
DRILLING RIG: CME 550

BORING No.: 13MWT47
DATE: 11-19-03
GEOLOGIST: M. G. COCHRAN
DRILLER: J. WALSH

Sample No. and Type or RQD	Depth (Ft.) or Run No.	Blows / 6" or RQD (%)	Sample Recovery / Sample Length	Lithology Change (Depth/Ft.) or Screened Interval	Soil Density/ Consistency or Rock Hardness	Color	Material Classification	USCS *	Remarks	PID/FID Reading (ppm) Sample	Sampler BZ	Borehole**	Driller BZ**
						LT BRN	CLAYEY SILT		LOOKS NTL	0	0	0	0
	4			4.0									
S1		50/4"	.2/		SOFT	LT BRN	SANDSTONE						
	6		.3										
									HIT H2O @ 6' BLOCKY, HOR. FRACS @ 14' INTERVALS				
C1										0	0	0	0
7.3/		91%	.8/						FE STAINED ZONES ~.4'				
8'			8						THICK THRU CORE AT .5' INTERVALS				
					M. HARD	LT BRN							
	12				M. HARD	LT GREY	SANDSTONE		LAMINATED W V.F LMS. PK GREY. ENTIRE CORE IS DAMP. LITTLE H2O. BLOCKY				
C2										0	0	0	0
8.8/		92%	9/										
9			9										
	21						TD 21'						

* When rock coring, enter rock brokeness.

** Include monitor reading in 6 foot intervals @ borehole. Increase reading frequency if elevated reponse read.

Drilling Area Background (ppm): 0

Remarks: H2O @ 3.7' BGS ON 11-20-03

Converted to Well: Yes ✓ No _____ Well I.D. #: 13MWT47

Tetra Tech NUS, Inc.

BORING LOG

PROJECT NAME: Crane NSWC
PROJECT NUMBER: 9060
DRILLING COMPANY: NA
DRILLING RIG: HAND AUGER

BORING No.: 13SB16
DATE: 12/8/03
GEOLOGIST: S. GRIER
DRILLER: NA

Sample No. and Type or RQD	Depth (Ft.) or Run No.	Blows / 6" or RQD (%)	Sample Recovery / Sample Length	Lithology Change (Depth/Ft.) or Screened Interval	MATERIAL DESCRIPTION: Soil Density/ Consistency or Rock Hardness	Color	Material Classification	USCS *	Remarks	PID/FID Reading (ppm): Sample	Sampler BZ	Borehole**	Driller BZ**
	0												
						BLK.	SILTY LOAM		SLIGHTLY MOIST				
0002						LT BR.	SILTY CLAY		MOIST + COHESIVE				
0204	4												

* When rock coring, enter rock brokeness.

** Include monitor reading in 6 foot intervals @ borehole. Increase reading frequency if elevated reponse read.

Drilling Area Background (ppm):

Remarks: WATER IN HOLE AT 2.0'

Converted to Well: Yes ____ No ✓ Well I.D. #: ____

Tetra Tech NUS, Inc.

BORING LOG

PROJECT NAME: Crane NSWC
PROJECT NUMBER: 9060
DRILLING COMPANY: NA
DRILLING RIG: HAND AUGER

BORING No.: 13 SB17
DATE: 12/8/03
GEOLOGIST: S. BRIER
DRILLER: NA

Sample No. and Type or RQD	Depth (Ft.) or Run No.	Blows / 6" or RQD (%)	Sample Recovery / Sample Length	Lithology Change (Depth/Ft.) or Screened Interval	MATERIAL DESCRIPTION: Soil Density/ Consistency or Rock Hardness	Color	Material Classification	USCS *	Remarks	PID/FID Reading (ppm): Sample	Sampler BZ	Borehole**	Driller BZ**
	1					Br.	SILTY LOAM		SLIGHTLY MOIST				
0002						Lt. Br./	SILTY CLAY		MOIST + COHESIVE				
						Gr.							
0204	4					Gr.	INCREASING CLAY % + FINE SAND						

* When rock coring, enter rock brokeness.

** Include monitor reading in 6 foot intervals @ borehole. Increase reading frequency if elevated reponse read.

Remarks: NO WATER IN HOLE

Drilling Area Background (ppm):

Converted to Well: Yes ____ No ✓ Well I.D. #: N/A

Tetra Tech NUS, Inc.

BORING LOG

PROJECT NAME: Crane NSWC
PROJECT NUMBER: 9060
DRILLING COMPANY: NA
DRILLING RIG: HAND AUGER

BORING No.: 13 SB 18
DATE: 12/8/03
GEOLOGIST: S. GRIER
DRILLER: NA

Sample No. and Type or RQD	Depth (Ft.) or Run No.	Blows / 6" or RQD (%)	Sample Recovery / Sample Length	Lithology Change (Depth/Ft.) or Screened Interval	MATERIAL DESCRIPTION: Soil Density/ Consistency or Rock Hardness	Color	Material Classification	USCS *	Remarks	PID/FID Reading (ppm): Sample	Sampler BZ	Borehole**	Driller BZ**
	0												
						BLK.	SILTY LOAM		SLIGHTLY MOIST				
0002						LT. BR.	SILTY CLAY		MOIST + COHESIVE				
0204	4					ORG.	CLAYEY FINE SAND 80% SAND		MOIST + SLIGHTLY COHESIVE				

* When rock coring, enter rock brokeness.

** Include monitor reading in 6 foot intervals @ borehole. Increase reading frequency if elevated reponse read.

Drilling Area Background (ppm):

Remarks: WATER IN HOLE AT 3.0'

Converted to Well: Yes ____ No ✓ Well I.D. #: N/A

Tetra Tech NUS, Inc.

BORING LOG

PROJECT NAME: Crane NSWC
PROJECT NUMBER: 9060
DRILLING COMPANY: NA
DRILLING RIG: HAND AUGER

BORING No.: 13 SB 19
DATE: 12/8/03
GEOLOGIST: S. GRIER
DRILLER: NA

Sample No. and Type or RQD	Depth (Ft.) or Run No.	Blows / 6" or RQD (%)	Sample Recovery / Sample Length	Lithology Change (Depth/Ft.) or Screened Interval	MATERIAL DESCRIPTION: Soil Density/ Consistency or Rock Hardness	Color	Material Classification	USCS*	Remarks	PID/FID Reading (ppm): Sample	Sampler BZ	Borehole**	Driller BZ**
	0												
	1					Blk. Br.	SILTY LOAM SILTY CLAY		SLIGHTLY MOIST MOIST + COHESIVE				
0002	2					Br.	SILTY LOAM W/ GRAVEL + FILL		SLIGHTLY MOIST				
0203	3					Br.	SILTY CLAY		MOIST + COHESIVE				

* When rock coring, enter rock brokeness.

** Include monitor reading in 6 foot intervals @ borehole. Increase reading frequency if elevated reponse read.

Remarks: REFUSAL AT 3.0'

Drilling Area Background (ppm):

Converted to Well: Yes ____ No ✓ Well I.D. #: N/A

Tetra Tech NUS, Inc.

BORING LOG

PROJECT NAME: Crane NSWC
PROJECT NUMBER: 9060
DRILLING COMPANY: NA
DRILLING RIG: HAND AUGER

BORING No.: 13 SB 20
DATE: 12/8/03
GEOLOGIST: S. GRIER
DRILLER: NA

Sample No. and Type or RQD	Depth (Ft.) or Run No.	Blows / 6" or RQD (%)	Sample Recovery / Sample Length	Lithology Change (Depth/Ft.) or Screened Interval	MATERIAL DESCRIPTION: Soil Density/ Consistency or Rock Hardness	Color	Material Classification	USCS*	Remarks	PID/FID Reading (ppm): Sample	Sample-BZ	Borehole**	Driller-BZ**
	0												
0001	1						SILTY LOAM W/ ORGANIC MTL. CLAYEY SAND W/GRAVEL + ROCKS		SLIGHTLY MOIST				

* When rock coring, enter rock brokeness.
** Include monitor reading in 6 foot intervals @ borehole. Increase reading frequency if elevated reponse read.

Remarks: REFUSAL AT 1.0'

Drilling Area Background (ppm):

Converted to Well: Yes ____ No ✓ Well I.D. #: N/A

Tetra Tech NUS, Inc.

BORING LOG

PROJECT NAME: Crane NSWC
PROJECT NUMBER: 9060
DRILLING COMPANY: NA
DRILLING RIG: HAND AUGER

BORING No.: 13SB21
DATE: 12/8/03
GEOLOGIST: S. BRIER
DRILLER: NA

Sample No. and Type or RQD	Depth (Ft.) or Run No.	Blows / 6" or RQD (%)	Sample Recovery / Sample Length	Lithology Change (Depth/Ft.) or Screened Interval	MATERIAL DESCRIPTION: Soil Density/ Consistency or Rock Hardness	Color	Material Classification	USCS*	Remarks	PID/FID Reading (ppm): Sample	Sampler BZ	Borehole**	Driller BZ**
	0					Blk.	SILTY LOAM		SLIGHTLY MOIST				
0002						Lt Br.	SILTY CLAY W/ SOME FINE SAND		MOIST + COHESIVE				
						Org.	CLAYEY SAND		MOIST + SEMI COHESIVE				
0204	4					Lt Br.	SILTY CLAY W/ SAND (FINE)		MOIST + COHESIVE				

* When rock coring, enter rock brokeness.

** Include monitor reading in 6 foot intervals @ borehole. Increase reading frequency if elevated reponse read.

Drilling Area Background (ppm):

Remarks:

Converted to Well: Yes ____ No ✓ Well I.D. #: N/A

Tetra Tech NUS, Inc.

BORING LOG

PROJECT NAME: Crane NSWC
PROJECT NUMBER: 9060
DRILLING COMPANY: NA
DRILLING RIG: HAND AUGER

BORING No.: 13 SB 22
DATE: 12/8/03
GEOLOGIST: S. GRIER
DRILLER: NA

Sample No. and Type or RQD	Depth (Ft.) or Run No.	Blows / 6" or RQD (%)	Sample Recovery / Sample Length	Lithology Change (Depth/Ft.) or Screened Interval	MATERIAL DESCRIPTION: Soil Density/ Consistency or Rock Hardness	Color	Material Classification	USCS *	Remarks	PID/FID Reading (ppm): Sample	Sample BZ	Borehole**	Driller BZ**
	0				BLK.	BLK	SILTY LOAM / GRAVEL		SLIGHTLY MOIST				
					Br.	Br.	SILTY CLAY		MOIST + COHESIVE				
0002							CLAYEY SAND W/ GRAVEL		↓				
							INCREASING GRAVEL						
0204	3.5					Org.	SANDY CLAY W/ GRAVEL						

* When rock coring, enter rock brokeness.

** Include monitor reading in 6 foot intervals @ borehole. Increase reading frequency if elevated reponse read.

Drilling Area Background (ppm):

Remarks: REFUSAL AT 3.5'

Converted to Well: Yes ____ No ✓ Well I.D. #: N/A

Tetra Tech NUS, Inc.

BORING LOG

PROJECT NAME: Crane NSWC
PROJECT NUMBER: 9060
DRILLING COMPANY: NA
DRILLING RIG: HAND AUGER

BORING No.: 13 SB 23
DATE: 12/8/03
GEOLOGIST: S. GRIER
DRILLER: NA

Sample No. and Type or RQD	Depth (Ft.) or Run No.	Blows / 6" or RQD (%)	Sample Recovery / Sample Length	Lithology Change (Depth/Ft.) or Screened Interval	MATERIAL DESCRIPTION: Soil Density/ Consistency or Rock Hardness	Color	Material Classification	USCS *	Remarks	PID/FID Reading (ppm): Sample	Sampler BZ	Borehole**	Driller BZ**
	0					Bk.	SILTY LOAM W/ GRAVEL		SLIGHTLY MOIST				
0202						ORG/ BK	SANDY CLAY W/ PATCHES OF ORGANIC MAT'RL		MOIST + SLIGHTLY COHESIVE				
						Org.	CLAYEY SAND		↓				
0204	4								↓				

* When rock coring, enter rock brokeness.

** Include monitor reading in 6 foot intervals @ borehole. Increase reading frequency if elevated reponse read.

Remarks:

Drilling Area Background (ppm):

Converted to Well: Yes ____ No ✓ Well I.D. #: N/A

Tetra Tech NUS, Inc.

BORING LOG

PROJECT NAME: Crane NSWC
PROJECT NUMBER: 9060
DRILLING COMPANY: NA
DRILLING RIG: HAND AUGER

BORING No.: 13 SB24
DATE: 12/8/03
GEOLOGIST: S. GRIER
DRILLER: NA

Sample No. and Type or RQD	Depth (Ft.) or Run No.	Blows / 6" or RQD (%)	Sample Recovery / Sample Length	Lithology Change (Depth/Ft.) or Screened Interval	MATERIAL DESCRIPTION: Soil Density/ Consistency or Rock Hardness	Color	Material Classification	USCS*	Remarks	PID/FID Reading (ppm): Sample	Sampler BZ	Borehole**	Driller BZ**
	0					Blk.	SILTY LOAM						
						Org.	CLAYEY SAND		MOIST + SEMI COHESIVE				
0002						Br.	SANDY CLAY 70% clay		MOIST + COHESIVE				
0203	3					Org.	SILTY SAND W/GRAVEL		MOIST + SEMI COHESIVE				

* When rock coring, enter rock brokeness.

** Include monitor reading in 6 foot intervals @ borehole. Increase reading frequency if elevated reponse read.

Drilling Area Background (ppm):

Remarks: REFUSAL AT 3.0'

Converted to Well: Yes ____ No ✓ Well I.D. #: N/A

Tetra Tech NUS, Inc.

BORING LOG

PROJECT NAME: Crane NSWC
PROJECT NUMBER: 9060
DRILLING COMPANY: NA
DRILLING RIG: HAND AUGER

BORING No.: 13 SB 25
DATE: 12/8/03
GEOLOGIST: S. GRIER
DRILLER: NA

Sample No. and Type or RQD	Depth (Ft.) or Run No.	Blows / 6" or RQD (%)	Sample Recovery / Sample Length	Lithology Change (Depth/Ft.) or Screened Interval	MATERIAL DESCRIPTION: Soil Density/ Consistency or Rock Hardness	Color	Material Classification	USCS*	Remarks	PID/FID Reading (ppm): Sample	Sampler BZ	Borehole**	Driller BZ**
	0												
						BLK	SILTY LOAM W/GRAVEL		SLIGHTLY MOIST				
0002						Org.	SILTY SAND W/CLAY (FINE)		MOIST + SEMI COHESIVE				
0204	4												

* When rock coring, enter rock brokeness.

** Include monitor reading in 6 foot intervals @ borehole. Increase reading frequency if elevated reponse read.

Remarks:

Drilling Area Background (ppm):

Converted to Well: Yes ____ No ✓ Well I.D. #: N/A

D.3

SWMU 16 ROUND 1

Tetra Tech NUS, Inc.

BORING LOG

PROJECT NAME: NSWC CRANE
PROJECT NUMBER: N9060 CTO 0279
DRILLING COMPANY: BOWSER MORNER
DRILLING RIG: Rotosonic

BORING NUMBER: 16MW701 / SB41
DATE: 4/8/03
GEOLOGIST: BOB BALKOVEC
DRILLER: DAVE S.

Sample No. and Type or RQD	Depth (Ft.) or Run No.	Blows / 6" or RQD (%)	Sample Recovery / Sample Length	Lithology Change (Depth /Ft.) or Screened Interval	MATERIAL DESCRIPTION: Soil Density/ Consistency or Rock Hardness	Color	Material Classification	USCS	Remarks	PID/FID Reading (ppm): Sample*	Sampler BZ*	Borehole**	Driller BZ*
	1				MUSST + SOFT	BR	.5' TOP SOIL	ML		0.0			
	2				MUSST +		.5'-7' CLAY	CL					
	3				M. STIFF								
S-1 1024	4		3.9' / 4'										
	5				DRY +				MED PLASTICITY				
	6				M. STIFF				4'-7'	0.0			
	7												
	8					YELL OR	7'-8' SANDY CLAY		6" CASING TO 8'				
S-2 1040	9		4.9' / 5'		DRY + SOFT		SILTSTONE 8'-14'	DBR	THIN LAM				
	10				DRY +								
	11				M STIFF					0.0			
	12					LT							
	13					BR							
S-3 1103	14		4.8' / 5'		DRY + HARD	LT GRAY	SHALE 13'-14'						
	15				MUSST +	YELL	SANDY CLAY W/ 14'-18'		WEATHERED				
	16				M STIFF	OR	S.S. FRAGS		SANDSTONE	0.0			
	17								LOSS SATURATION				
	18								@ 16-16.5'				
S-4 1147	19		4.8' / 5'		WET +	LT GRAY	SHALE & SILTSTONE 18'-19'	MS					
	20					DK	SHALE 19'-24'	VBR					
	21					GRAY				0.0			
	22												
	23												
S-5 1400	24		4.9' / 5'										

* When rock coring, enter rock brokeness.

** Include monitor reading in 6 foot intervals @ borehole. Increase reading frequency if elevated reponse read.

Drilling Area Background (ppm): 0.0

Remarks: 6" 0-9' WELL SET @ 24' 10' SCREEN
5" 9'-24' SAND TO 12'
BENT TO 10' VER. CLAY TO 7'

Converted to Well: Yes X No ____ Well I.D. #: 16MW701

Tetra Tech NUS, Inc.

BEDROCK
MONITORING WELL SHEET

WELL No.: 16MW701

PERMIT No:

PROJECT:	NSWC CRANE	DRILLING Co.:	BOWSER MORNER	BORING No.:	16MW701/SB41
PROJECT No.:	9060 CTO 0279	DRILLER:	DAVE S.	DATE COMPLETED:	4/4/03
SITE:	SWMU 16	DRILLING METHOD:	ROTOSONIC	NORTHING:	1321193.488
GEOLOGIST:	B. BALKOVEC	DEV. METHOD:	WATTERA	EASTING:	3032881.785

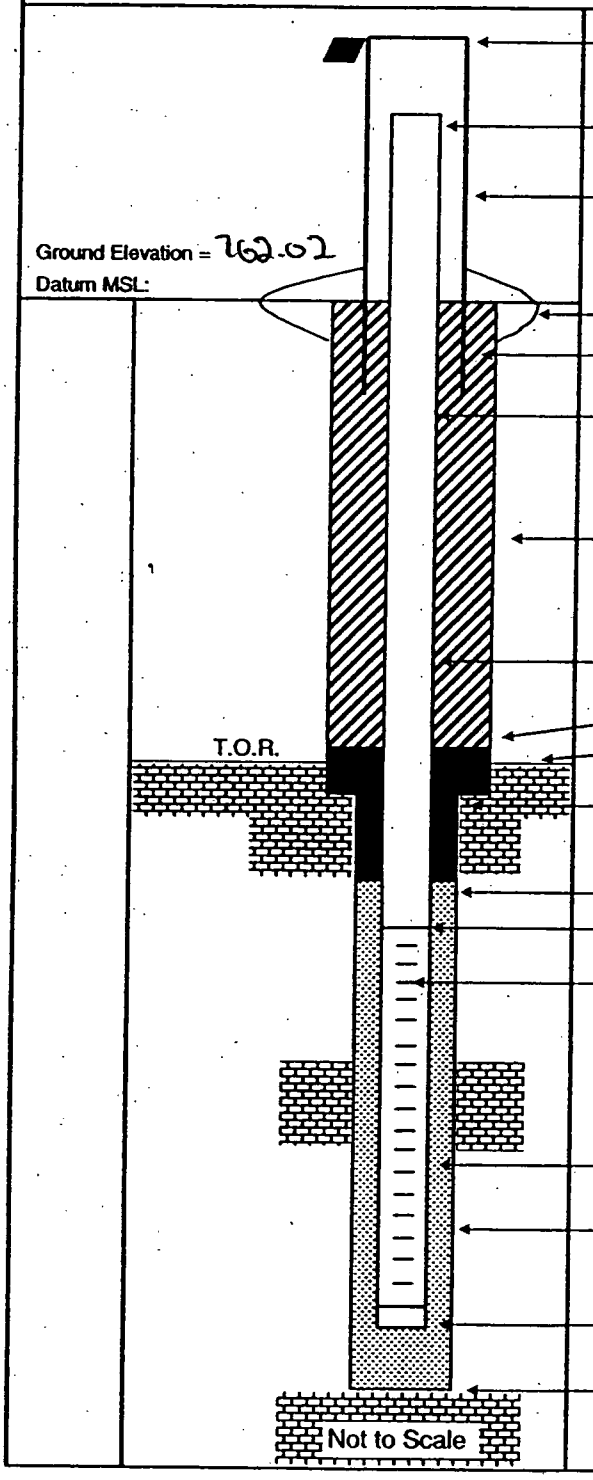

Elevation of Top of Casing: 765.00

Stick Up of Casing Above Ground Surface: 2.48

Elevation of Top of Riser: 764.5

I.D. of Surface Casing: 4" SQUARE

Type of Surface Casing: STEEL

Type of Surface Seal: 4'x4'x6" PAD

I.D. of Permanent Casing: NA

I.D. of Riser: 2"

Type of Riser: PVC

Borehole Diameter: 5"

Type of Backfill: VOL CLAY

Elevation / Depth Top of Seal: 752.02 / 10'

Elevation / Depth Top of Bedrock: 754.02 / 8'

Type of Seal: BENT CHIPS

Elevation / Depth of Top of Filter Pack: 750.02 / 12'

Elevation / Depth of Top of Screen: 748.02 / 14'

Type of Screen: PVC

Slot Size x Length: .20 x 10'

I.D. of Screen: 2"

Type of Filter Pack: No. 20-40 SAND

Diameter of Hole in Bedrock: (Core) / Ream: 5"

Elevation / Depth of Bottom of Screen: 738.02 / 24'

Elevation / Total Depth of Borehole: 738.02 / 24'

Tetra Tech NUS, Inc.

BORING LOG

PROJECT NAME: NSWC CRANE
PROJECT NUMBER: N9060 CTO 0279
DRILLING COMPANY: BOWSER MORNER
DRILLING RIG: ROTOSONIC

BORING NUMBER: 16MW702
DATE: 4/11/03
GEOLOGIST: BOB BALKOVEC
DRILLER: DAVE S

Sample No. and Type or RQD	Depth (Ft.) or Run No.	Blows / 6" or RQD (%)	Sample Recovery / Sample Length	Lithology Change (Depth /Ft.) or Screened Interval	MATERIAL DESCRIPTION: Soil Density/ Consistency or Rock Hardness	Color	Material Classification	USCS *	Remarks	PID/FID Reading (ppm): Sample	Sample BZ	Borehole**	Driller BZ**
	1				MOIST	BR	.5' TOP SOIL			0.0			
	2				MOIST		CLAYEY SILT	ML					
	3				M. STIFF								
S1 0809	4		1.1' / 4'										
	5					BR	4-4.5 CLAYEY SILT			0.0	0.0	0.0	0.0
	6				SOFT	GRAY	4.5-8' SILTY CLAY	CL					
	7				MOIST				V. SOFT @ 7'-8'				
S2 0811	8		4' / 4'										
	9				STIFF	YELL	8-10.5' SILTY SAND W/ SS		WEATHERED SS				
	10					OR	FRAGS		8'-13'				
	11			▼?	HARD		SAND SEAM 10.5'-13'		POSS WATER @ 10.5'				
	12				STIFF								
S3 0815	13		4.5' / 5'		MOIST								
	14					DK	SHALE 13'-18'	VBR					
	15					GRAY							
	16												
	17								WET @ 16' @ 0838				
S4 0820	18		5' / 5'						WATER RUNNING				
				TD 18'			WELL SET @ 18 2" PVC		TWO HOLE				
							SCREENED 8'-18'						
							SAND 6'						
							BENTCHIPS TO 2'						

* When rock coring, enter rock brokeness.

** Include monitor reading in 6 foot intervals @ borehole. Increase reading frequency if elevated reponse read.

Remarks: 5" 0-18'

Drilling Area Background (ppm): 0.0

Converted to Well: Yes X No _____ Well I.D. #: 16MW702

Tetra Tech NUS, Inc.

BEDROCK MONITORING WELL SHEET

WELL No.: 16MW702

PERMIT No:

PROJECT:	NSWC CRANE	DRILLING Co.:	BOWSER MORNER	BORING No.:	16MW702
PROJECT No.:	9060 CTO 0279	DRILLER:	DAVES	DATE COMPLETED:	4/1/03
SITE:	SWMU 16	DRILLING METHOD:	ROTOSONIC	NORTHING:	1371146.42
GEOLOGIST:	B. BALKOVEC	DEV. METHOD:	WATTERA	EASTING:	3032559.16

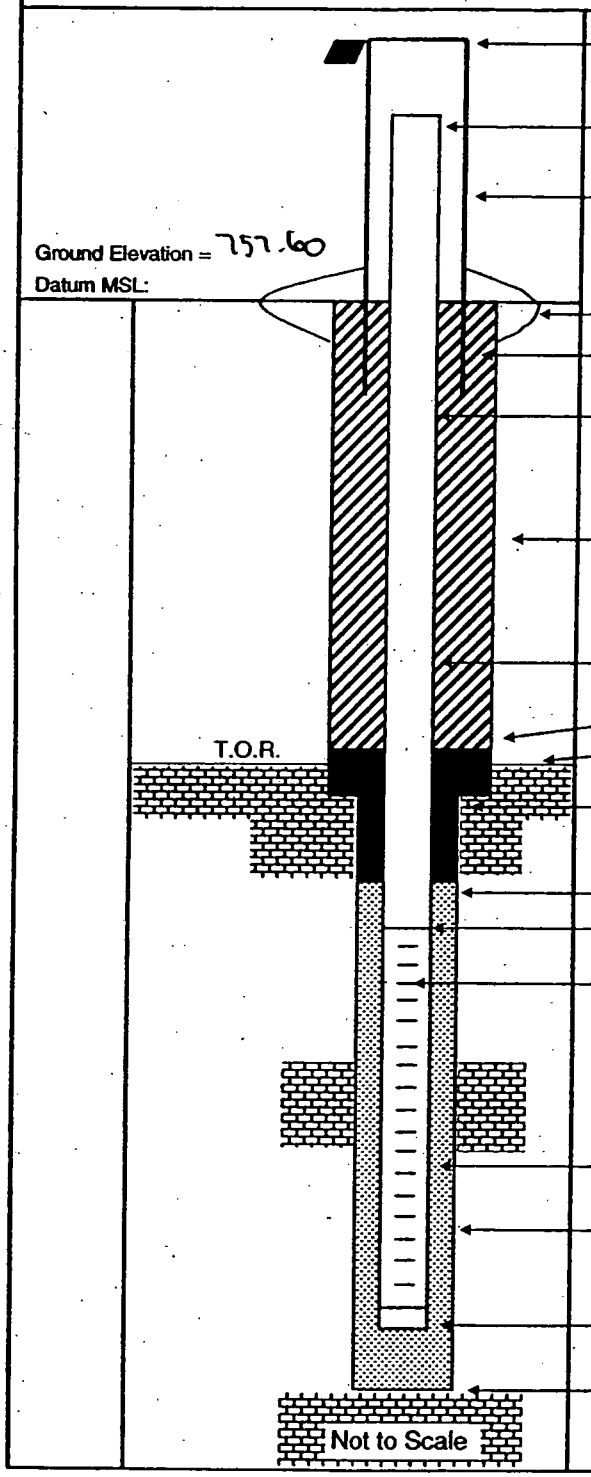

Elevation of Top of Casing: 760.98

Stick Up of Casing Above Ground Surface: 2.76

Elevation of Top of Riser: 760.36

I.D. of Surface Casing: 4" SQUARE

Type of Surface Casing: STEEL

Type of Surface Seal: 4'x4'x6" PAD

I.D. of Permanent Casing: NA

I.D. of Riser: 2"

Type of Riser: PVC

Borehole Diameter: 5"

Type of Backfill: CEMENT

Elevation / Depth Top of Seal: 755.6 / 2'

Elevation / Depth Top of Bedrock: 744.6 / 13'

Type of Seal: BENT. CHIPS

Elevation / Depth of Top of Filter Pack: 751.6 / 6'

Elevation / Depth of Top of Screen: 749.6 / 8'

Type of Screen: PVC

Slot Size x Length: .20 x 10'

I.D. of Screen: 2"

Type of Filter Pack: No. 20-40 SAND

Diameter of Hole in Bedrock:
Core / Ream: 5"

Elevation / Depth of Bottom of Screen: 739.6 / 18'

Elevation / Total Depth of Borehole: 739.6 / 18'

Tetra Tech NUS, Inc.

BORING LOG

PROJECT NAME: NSWC CRANE
PROJECT NUMBER: N9060 CTO 0279
DRILLING COMPANY: BOWSER MORNER
DRILLING RIG: ROTOSONIC

BORING NUMBER: 16MW103 / SB36
DATE: 4/10/03
GEOLOGIST: BOB BALKOVEC
DRILLER: DAVE S.

Sample No. and Type or RQD	Depth (Ft.) or Run No.	Blows / 6" or RQD (%)	Sample Recovery / Sample Length	Lithology Change (Depth /Ft.) or Screened Interval	MATERIAL DESCRIPTION: Soil Density/ Consistency or Rock Hardness	Color	Material Classification	USCS*	Remarks	PID/FID Reading (ppm): Sample	Sampler BZ	Borehole**	Drilling BZ
	1					LT.	CLAY 0-1'	CL	6" TO 3"	0.0			
	2					BR	SILTY SAND W/SS FRAGS	SM					
	3						(1'-3')						
	4		0934	4 = 11" 5 = 4	HARD	YELL	3'-10.5' SANDSTONE	BR	THIN BEDDING	0.0			
	5					OR							
C-1	6							MS	MASSIVE 5-8'				
	7		71% RQD										
	8												
	9		5.8' / 6'					BR					
	10				HARD	YELL OR	SANDSTONE			0.0			
	11				BRITTLE	DK GRAY	10.5'-16' SHALE	BR	HIGHLY FRACTURED				
	12								V.BR				
	13												
	14		51% RQD										
C-2	15		0845										
	16												
	17				SOFT TO	GRAY	16'-21' CLAYEY SHALE						
	18				BRITTLE								
	19		9.7' / 10'		DRY								
	20					DK GRAY	CLAYEY SHALE			0.0			
	21				V.SOFT								
	22		47% RQD		TO BRITTLE								
	23								V.WET FROM 24'				
C-3	24								TO 27'				
	25				WET SOFT				WATER LOSS AFTER BLOW OUT				

* When rock coring, enter rock brokeness.

** Include monitor reading in 6 foot intervals @ borehole. Increase reading frequency if elevated reponse read.

Remarks: 6" 0-1' 5" 3'-34'

Drilling Area Background (ppm): 0.0

Converted to Well: Yes X No _____ Well I.D. #: 16MW103

Tetra Tech NUS, Inc.

BORING LOG

PROJECT NAME: NSWC CRANE
PROJECT NUMBER: N9060 CTO 0279
DRILLING COMPANY: BOWSER MORNER
DRILLING RIG: ROTOSONIC

BORING NUMBER: 16MW103 / SB36
DATE: 4/10/03
GEOLOGIST: BOB BALKOVEC
DRILLER: DAVES

Sample No. and Type or RQD	Depth (Ft.) or Run No.	Blows / 6" or RQD (%)	Sample Recovery / Sample Length	Lithology Change (Depth /Ft.) or Screened Interval	MATERIAL DESCRIPTION: Soil Density/ Consistency or Rock Hardness	Color	Material Classification	USCS*	Remarks	PID/FID Reading (ppm): Sample	Sampler BZ	Borehole**	Driller BZ**
	26		C0910	▼	WET	DK	CLAYEY SHALE	MR	WET	0.0			
	27				SOFT	GRY							
	28				MOIST	DK GRY	27-29' SHALE						
	29		95" / 60"		STIFF								
	30						29-32 SHALE-CLAYEY						
	31		46% RQD										
C-4	32		C0943										
	33					BLK	COAL SEAM 32-33'						
	34		40" / 5"			DK GRY	SHALE						
				T.D. 34'			WELL SET @ 35 2" PVC		DRILLER SET				
							SCREENED 25-35'		WELL @ 35'				
							SAND TO 23'		OVERDRILLED.				
							BENT CHIPS TO 20'		DURING CLEANOUT				
							VOL. CLAY TO 2'						

* When rock coring, enter rock brokeness.

** Include monitor reading in 6 foot intervals @ borehole. Increase reading frequency if elevated reponse read.

Remarks:

Drilling Area Background (ppm): 0.0

Converted to Well: Yes X No ____ Well I.D. #: 16MW103

Tetra Tech NUS, Inc.

BEDROCK
MONITORING WELL SHEET

WELL No.: 16MW103

PERMIT No:

PROJECT:	NSWC CRANE	DRILLING Co.:	BOWSER MORNER	BORING No.:	16MW103/5036
PROJECT No.:	9060 CTO 0279	DRILLER:	DAVES.	DATE COMPLETED:	4/10/03
SITE:	SWMU 16	DRILLING METHOD:	ROTOSONIC	NORTHING:	1320946.968
GEOLOGIST:	B. BALKOVEC	DEV. METHOD:	WATTERA	EASTING:	3032559.16

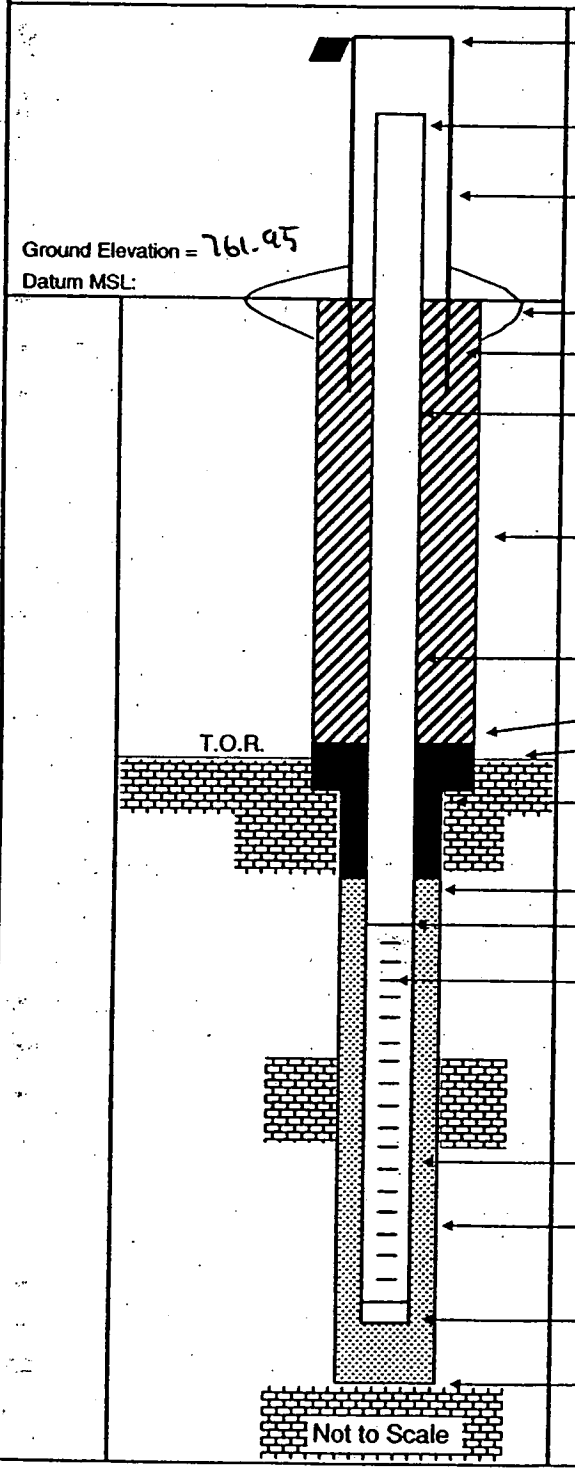

Elevation of Top of Casing: 764.96

Stick Up of Casing Above Ground Surface: 2.46

Elevation of Top of Riser: 764.41

I.D. of Surface Casing: 4" SQUARE

Type of Surface Casing: STEEL

Type of Surface Seal: 4'x4'x6" PAD

I.D. of Permanent Casing: NA

I.D. of Riser: 2"

Type of Riser: PVC

Borehole Diameter: 5"

Type of Backfill: VOL CLAY

Elevation / Depth Top of Seal: 741.95 / 20'

Elevation / Depth Top of Bedrock: 758.95 / 3'

Type of Seal: BENT CHIPS

Elevation / Depth of Top of Filter Pack: 738.95 / 23'

Elevation / Depth of Top of Screen: 736.95 / 25'

Type of Screen: PVC

Slot Size x Length: .20 x 10'

I.D. of Screen: 2"

Type of Filter Pack: No. 20-40 SAND

Diameter of Hole in Bedrock: Core / Ream: 5"

Elevation / Depth of Bottom of Screen: 726.95 / 35'

Elevation / Total Depth of Borehole: 726.95 / 35'

Tetra Tech NUS, Inc.

BORING LOG

PROJECT NAME: NSWC CRANE
PROJECT NUMBER: N9060 CTO 0279
DRILLING COMPANY: BOWSER MORNER
DRILLING RIG: ROTOSONIC

BORING NUMBER: 16MW704
DATE: 4/8/03 - 4/9/03
GEOLOGIST: BOB BALKOVEC
DRILLER: DAVE S.

Sample No. and Type or RQD	Depth (Ft.) or Run No.	Blows / 6" or RQD (%)	Sample Recovery / Sample Length	Lithology Change (Depth /Ft.) or Screened Interval	MATERIAL DESCRIPTION: Soil Density/ Consistency or Rock Hardness	Color	Material Classification	USCS*	Remarks	PID/FID Reading (ppm): Sample*	Sampler BZ	Borehole**	Driller BZ
	1				MOIST & SOFT	BR	.5' TOP SOIL	TM		0.0			
	2				MOIST &	LT GRAY	.5'-3' CLAY	CL					
	3				STIFF	& YELLOW							
S-1 1540	4		4" / 4"		DRY & SOFT		3'-8.5' SANDSTONE	BR	ROCK @ 3'				
S-2 1546	5		1" / 7"		HARD				REFUSAL @ 5'	0.0			
	6					RED	SANDSTONE		MODERATE WEATH.				
	7		64% RQD						VERT. FRACT.				
C-1	8		@ 1615										
	9				SOFT	RED & LT GRAY	SILTY SANDSTONE 8.5'-9'	BR	HIGHLY FRACTURED				
	10		47 / 5		HARD		SANDSTONE 9'-18'						
	11				HARD &	RED			HIGHLY FRACT.				
4/8	12					& BR							
	13												
	14		47% RQD										
C-2	15		@ 1628										
	16												
	17												
	18								POSS SHT @ 18'				
	19				SOFT	DK GRAY	SHALE 18'-25'		FLUSH OUT HOLE.				
	20		96 / 10						LET SIT OVERNIGHT				
	21					DK	SHALE MATERIAL	BR	CUTTINGS TO 20'				
4/9	22					GRAY	IN CUTTINGS						
R-1	23								WL = 15' BGS				
	24								@ 0738				
	25		0800	TD 25									

* When rock coring, enter rock brokeness.

** Include monitor reading in 6 foot intervals @ borehole. Increase reading frequency if elevated reponse read.

Drilling Area Background (ppm): 0.0

Remarks: 6" 0-4' 5" CORE 4'-20' 5" REAM 20'-25'
WELL SET @ 25' SAND TO 13' BENT TO 12' VOLCLAY TO 2'

Converted to Well: Yes X No ___ Well I.D. #: 16MW704

Tetra Tech NUS, Inc.

BEDROCK
MONITORING WELL SHEET

WELL No.: 16MWT04

PERMIT No:

PROJECT:	NSWC CRANE	DRILLING Co.:	BOWSER MORNER	BORING No.:	16MWT04
PROJECT No.:	9060 CTO 0279	DRILLER:	DAVE S.	DATE COMPLETED:	4/9/03
SITE:	SWMU 16	DRILLING METHOD:	ROTOSONIC	NORTHING:	1321003.281
GEOLOGIST:	B. BALKOVEC	DEV. METHOD:	WATTERA	EASTING:	3032946.4660

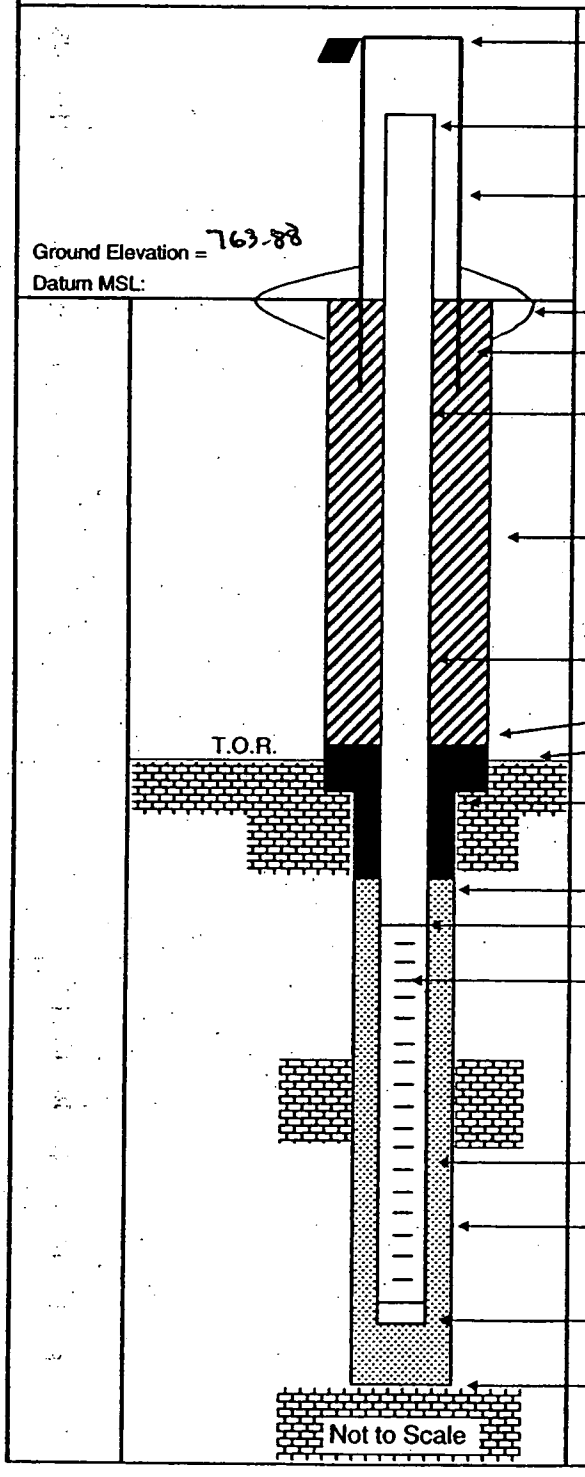

Elevation of Top of Casing: 766.71

Stick Up of Casing Above Ground Surface: 2.26

Elevation of Top of Riser: 766.14

I.D. of Surface Casing: 4" SQUARE

Type of Surface Casing: STEEL

Type of Surface Seal: 4'x4'x6" PAD

I.D. of Permanent Casing: NA

I.D. of Riser: 2"

Type of Riser: PVC

Borehole Diameter: 5"

Type of Backfill: CEMENT 0-2' VOLCLAY 2'-12'

Elevation / Depth Top of Seal: 751.88 / 12'

Elevation / Depth Top of Bedrock: 760.88 / 3'

Type of Seal: BENT CHIPS

Elevation / Depth of Top of Filter Pack: 750.88 / 13'

Elevation / Depth of Top of Screen: 748.88 / 15'

Type of Screen: PVC

Slot Size x Length: .20 x 10'

I.D. of Screen: 2"

Type of Filter Pack: No. 20-40 SAND

Diameter of Hole in Bedrock: Core / Ream: 5"

Elevation / Depth of Bottom of Screen: 738.88 / 25'

Elevation / Total Depth of Borehole: 738.88 / 25'

Tetra Tech NUS, Inc.

BORING LOG

PROJECT NAME: NSWC CRANE
PROJECT NUMBER: N9060 CTO 0279
DRILLING COMPANY: BOWSER MORNER
DRILLING RIG: ROTOSONIC
BORING NUMBER: 16MW105 / SB26
DATE: 4/9/03
GEOLOGIST: BOB BALKOVEC
DRILLER: DAVES

Sample No. and Type or RQD	Depth (Ft.) or Run No.	Blows / 6" or RQD (%)	Sample Recovery / Sample Length	Lithology Change (Depth /Ft.) or Screened Interval	Soil Density / Consistency or Rock Hardness	Color	Material Classification	USCS*	Remarks	PID/FID Reading (ppm) Sample	Sample BZ	Borehole**	Driller BZ
	1				MOIST	BR	0-1' CLAY	CL		0.0			
	2				M. STIFF		1'-4' SILTY SAND W/	SM					
	3						SS FRAGS						
S1	4								6" TO 4'				
	5				HARD	LT BR	4'-6' SANDSTONE	BR		0.0			
	6				DRY								
C-1	7		60% RQD		HARD	LT	6'-8.5' SILTY STONE	VBR					
	8		C1320			GRAY							
	9		4.8' / 5'			GRAY	8.5'-9' SANDSTONE	MB					
	10				SOFT TO	LT	9'-12' CLAYEY SHALE	BR		0.0			
	11				STIFF	GRAY							
	12												
	13				LOOSE	BLK	COAL SEAM 12-12.5'						
C-2	14		C1335		HARD	LT GRAY	SANDSTONE 12.5'-14'	MS					
	15				SOFT TO	DK GRAY	SHALE (14'-40')	VBR		0.0			
	16		47%		BRITTLE	BR	SANDY FROM 15'-16.5'						
	17		RQD										
	18					BLK	SHALE 16.5'-19'						
	19		9.8' / 10'			DK GRAY							
	20				SOFT TO	LT	19'-25' SHALE & CLAYEY - 14			0.0			
	21				BRITTLE	DK							
	22					GRAY							
	23												
C-3	24												
	25												

* When rock coring, enter rock brokeness.

** Include monitor reading in 6 foot intervals @ borehole. Increase reading frequency if elevated reponse read.

Remarks:

Drilling Area Background (ppm): 0.0

Converted to Well: Yes X No _____ Well I.D. #: 16MW105

Tetra Tech NUS, Inc.

BORING LOG

PROJECT NAME: NSWC CRANE
PROJECT NUMBER: N9060 CTO 0279
DRILLING COMPANY: BOWSER MORNER
DRILLING RIG: ROTOSONIC

BORING NUMBER: 16MW105/SB26
DATE: 4/9/03
GEOLOGIST: BOB BALKOVEC
DRILLER: DAVE S.

Sample No. and Type or RQD	Depth (Ft.) or Run No.	Blows / 6" or RQD (%)	Sample Recovery / Sample Length	Lithology Change (Depth /Ft.) or Screened Interval	MATERIAL DESCRIPTION: Soil Density/ Consistency or Rock Hardness	Color	Material Classification	USCS *	Remarks	PID/FID Reading (ppm): Sample	Sampler BZ	Borehole**	Driller BZ
	26		@1354		SOFT TO	GY	SHALE 25'-40'	BR		00			
	27		37%		BRITTLE	DK							
	28		RQD			GRAY							
	29												
	30		47'/40'										
	31				SOFT TO		SHALE:	BR	V. SOFT @ 31'				
	32				BRITTLE		- CLAYEY 30-32'		PUSS WATER				
	33		45%						V. WET 30-40'				
	34		RQD										
C-4	35		@1445										
	36												
	37												
	38						THIN COAL SEAM 37'-37.4'						
	39							VBR					
	40		27/40'										
							WELL SET @ 39' 2" PVC						
							SAND TO 27'						
							BENT CHIPS TO 25'						
							VOL-CLAY TO						

* When rock coring, enter rock brokeness.

** Include monitor reading in 6 foot intervals @ borehole. Increase reading frequency if elevated reponse read.

Remarks:

Drilling Area Background (ppm): 0.0

Converted to Well: Yes X No

Well I.D. #: 16MW105

Tetra Tech NUS, Inc.

BEDROCK
MONITORING WELL SHEET

WELL No.: 16MW705

PERMIT No:

PROJECT:	NSWC CRANE	DRILLING Co.:	BOWSER MORNER	BORING No.:	16MW705/SB21
PROJECT No.:	9060 CTO 0279	DRILLER:	DAVES	DATE COMPLETED:	4/9/03
SITE:	SWMU 16	DRILLING METHOD:	ROTOSONIC	NORTHING:	[redacted] 1320741.79
GEOLOGIST:	B. BALKOVEC	DEV. METHOD:	WHALE PUMP	EASTING:	[redacted] 3032812.77

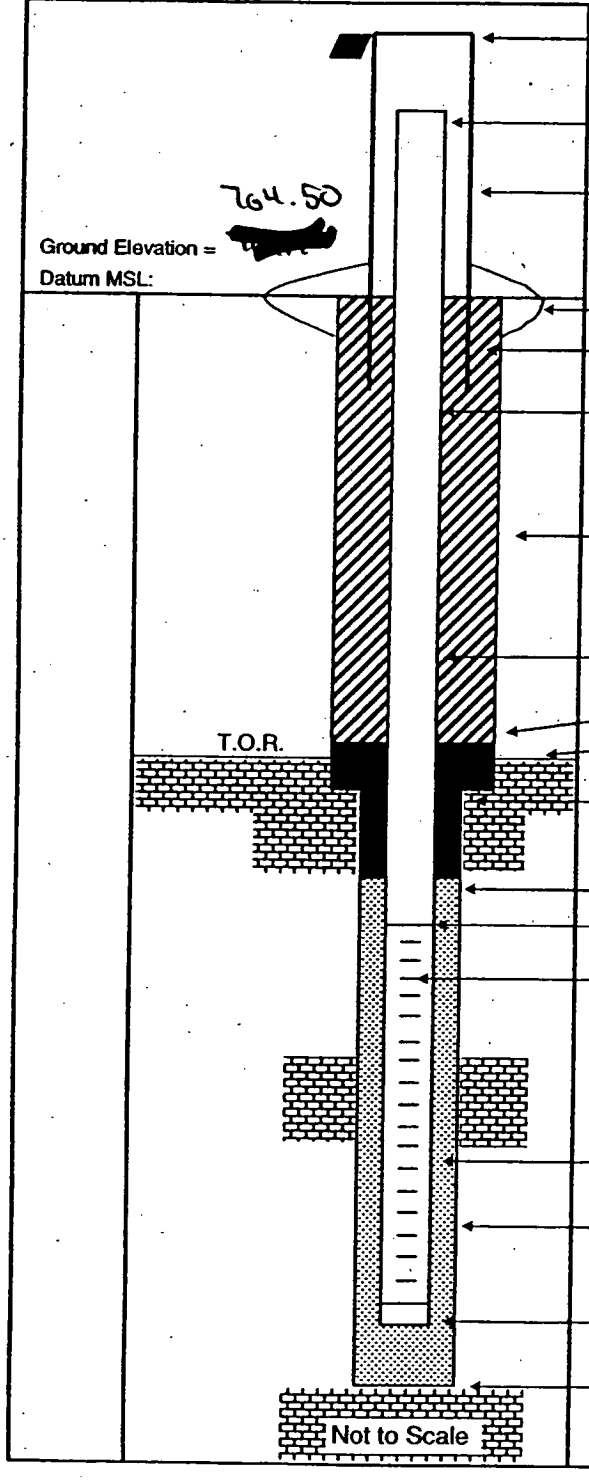

Elevation of Top of Casing:	[redacted] 767.45
Stick Up of Casing Above Ground Surface:	2.38
Elevation of Top of Riser:	[redacted] 766.88
I.D. of Surface Casing:	4" SQUARE
Type of Surface Casing:	STEEL
Type of Surface Seal:	4'x4'x6" PAD
I.D. of Permanent Casing:	NA
I.D. of Riser:	2"
Type of Riser:	PVC
Borehole Diameter:	5"
Type of Backfill:	VOL CLAY (0-25')
Elevation / Depth Top of Seal:	739.5 / 25'
Elevation / Depth Top of Bedrock:	760.5 / 4'
Type of Seal:	BENT CHIPS
Elevation / Depth of Top of Filter Pack:	737.5 / 27'
Elevation / Depth of Top of Screen:	735.5 / 29'
Type of Screen:	PVC
Slot Size x Length:	.20 x 10'
I.D. of Screen:	2"
Type of Filter Pack:	No. 20-40 SAND
Diameter of Hole in Bedrock: Core / Ream:	5"
Elevation / Depth of Bottom of Screen:	725.5 / 39'
Elevation / Total Depth of Borehole:	724.5 / 40'

Tetra Tech NUS, Inc.

BORING LOG

PROJECT NAME: NSWC CRANE
PROJECT NUMBER: N9060 CTO 0279
DRILLING COMPANY: BOWSER MORNER
DRILLING RIG: ROTOSONIC

BORING NUMBER: 16MW106
DATE: 4/24/03
GEOLOGIST: BOB BALKOVEC
DRILLER: DENNIS SZAK.

Sample No. and Type or RQD	Depth (Ft.) or Run No.	Blows / 6" or RQD (%)	Sample Recovery / Sample Length	Lithology Change (Depth /Ft.) or Screened Interval	MATERIAL DESCRIPTION: Soil Density/ Consistency or Rock Hardness	Color	Material Classification	USCS *	Remarks	PID/FID Reading (ppm): Sample	Sampler BZ	Borehole **	Driller BZ
	1						REFER TO 16MW101						
							FOR COMPLETE						
							LITH. DETAILS						
	5												
	10												
	15												
							16 FT V-WET						
							CUTTINGS						
	20						SET WELL @ 25' 2" PVC						
							SCREENED 15'-25'						
	25												

* When rock coring, enter rock brokeness.

** Include monitor reading in 6 foot intervals @ borehole. Increase reading frequency if elevated reponse read.

Remarks:

Drilling Area Background (ppm):

Converted to Well: Yes X No _____ Well I.D. #: 16MW106

Tetra Tech NUS, Inc.

BEDROCK
MONITORING WELL SHEET

WELL No.: 16MW706

PERMIT No:

PROJECT:	NSWC CRANE	DRILLING Co.:	BOWSER MORNER	BORING No.:	16MW706
PROJECT No.:	9060 CTO 0279	DRILLER:	DENNIS SPARK	DATE COMPLETED:	4/24/03
SITE:	SWMU 16	DRILLING METHOD:	[redacted]	NORTHING:	1321199.519
GEOLOGIST:	B. BALKOVEC	DEV. METHOD:	WATTERA	EASTING:	3032883.373

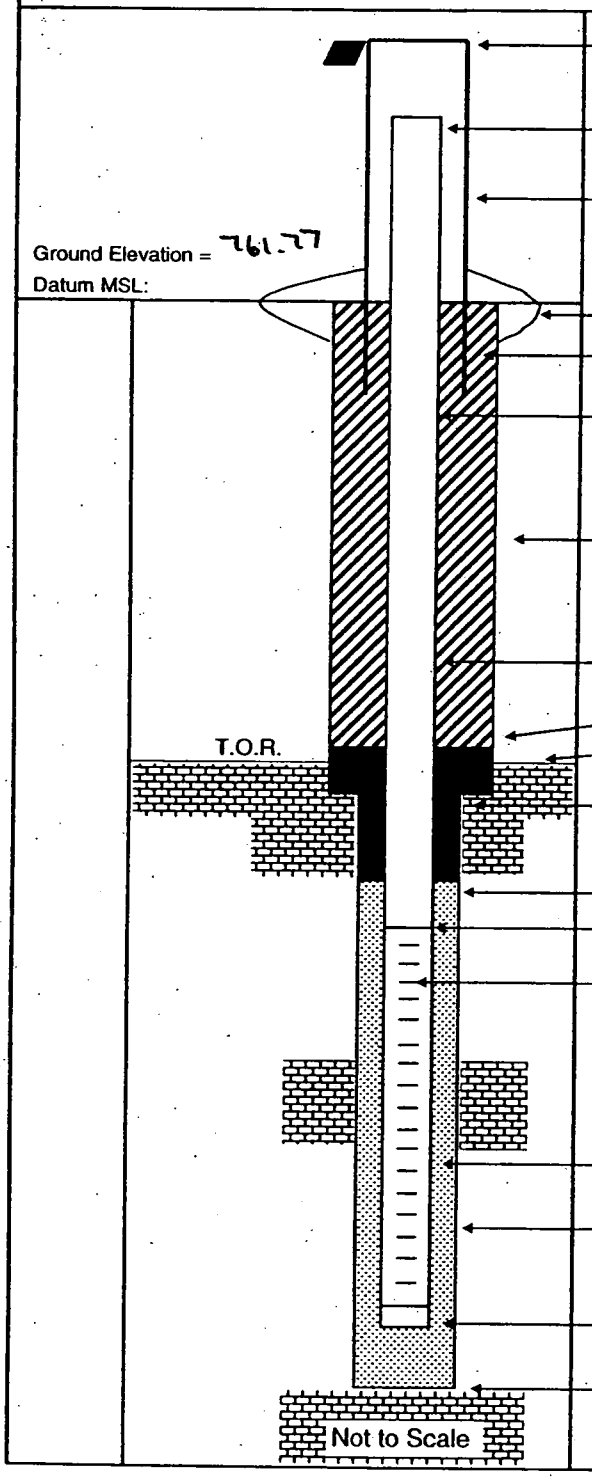

Elevation of Top of Casing: 764.85

Stick Up of Casing Above Ground Surface: 2.67

Elevation of Top of Riser: 764.44

I.D. of Surface Casing: 4" SQUARE

Type of Surface Casing: NA

Type of Surface Seal: 4'x4'x6" PAD

I.D. of Permanent Casing: NA

I.D. of Riser: 2"

Type of Riser: PVC

Borehole Diameter: 6"

Type of Backfill: VOLCLAY 11'-2'

Elevation / Depth Top of Seal: 750.77 / 11'

Elevation / Depth Top of Bedrock: 753.77 / 8'

Type of Seal: BENT CHIPS

Elevation / Depth of Top of Filter Pack: 748.77 / 13'

Elevation / Depth of Top of Screen: 746.77 / 15'

Type of Screen: PVC

Slot Size x Length: .20 x 10'

I.D. of Screen: 2"

Type of Filter Pack: No. 20-40 SAND

Diameter of Hole in Bedrock:
Core / Ream: 6"

Elevation / Depth of Bottom of Screen: 736.77 / 25'

Elevation / Total Depth of Borehole: 736.77 / 25'

Tetra Tech NUS, Inc.

BORING LOG

PROJECT NAME: NSWC CRANE
PROJECT NUMBER: N9060 CTO 0279
DRILLING COMPANY: BOWSER MORNER
DRILLING RIG: GEOPROBE 54LT

BORING NUMBER: 16SB01
DATE: 3-27-03
GEOLOGIST: M. G. COCHRAN
DRILLER: J. AKERS

Sample No. and Type or RQD	Depth (Ft.) or Run No.	Blows / 6" or RQD (%)	Sample Recovery / Sample Length	Lithology Change (Depth /Ft.) or Screened Interval	Soil Density/ Consistency or Rock Hardness	Color	Material Classification	USCS*	Remarks	PID/FID Reading (ppm) Sample	Sample/BZ	Borehole	Drill/BZ
S1	1		1.0/1.0			BL	ASPHALT + GRAVEL			1.7	1.7	1.7	1.7
S2	2		2.8/			GR BRN	CLAYEY SILT		DAMP, FILL MOTTLED 2-4'	1.7	1.7	1.7	1.7
	3		3.0										
	4					BRN	CLAYEY SILT			1.7	1.7	1.7	1.7
S3	5												
	6						REFUSAL @ 6'						
	7												
	8												
	9												
	10												
	11												
	12												
	13												
	14												
	15												
						SAMPLED	16SS010002						
						@	0845						
						SAMPLED	16SB010406						
						@	0900						

* When rock coring, enter rock brokeness.

** Include monitor reading in 6 foot intervals @ borehole. Increase reading frequency if elevated reponse read.

Remarks: GEOPROBE MACRO CORE

Drilling Area Background (ppm): 1.7

Converted to Well: Yes ____ No ✓ Well I.D. #: ____

Tetra Tech NUS, Inc.

BORING LOG

PROJECT NAME: NSWC CRANE
PROJECT NUMBER: N9060 CTO 0279
DRILLING COMPANY: BOWSER MORNER
DRILLING RIG: GEOPROBE 54LT

BORING NUMBER: 16SB02
DATE: 3-27-03
GEOLOGIST: MG COCHRAN
DRILLER: JAKERS

Sample No. and Type or RQD	Depth (FL) or Run No.	Blows / 6" or RQD (%)	Sample Recovery / Sample Length	Lithology Change (Depth /FL) or Screened Interval	MATERIAL DESCRIPTION: Soil Density/ Consistency or Rock Hardness	Color	Material Classification	USCS*	Remarks	PID/FID Reading (ppm): Sample	Sample Bz	Borehole**	Driller BZ
S1	1		3.7/	1.0		BL	ASPHALT			1.7	1.7	1.7	1.7
	2		4.0			BRN	CLAYEY SILT	ML	DAMP				
	3								FILL				
	4												
S2	5		2.6/			GR-BRN	SILTY SAND	SM	DAMP	1.7	1.7	1.7	1.7
	6		2.0						SS FRAG IN BTM.				
	7						REFUSAL @ 6'		WEATHERED SS IN BTM				
	8												
	9												
	10												
	11												
	12												
	13												
	14												
	15												
						SAMPLED 16SS02 0002 @ 905							
						SAMPLED 16 SB 02 0406 @ 915							

* When rock coring, enter rock brokeness.

** Include monitor reading in 6 foot intervals @ borehole. Increase reading frequency if elevated reponse read.

Remarks: GEO PROBE 54LT

Drilling Area Background (ppm): 1.7

Converted to Well: Yes ____ No ✓ Well I.D. #: ____

Tetra Tech NUS, Inc.

BORING LOG

PROJECT NAME: NSWC CRANE
PROJECT NUMBER: N9060 CTO 0279
DRILLING COMPANY: BOWSER MORNER
DRILLING RIG: GEOPROBE 54LI

BORING NUMBER: 16SB03
DATE: 3-27-03
GEOLOGIST: M.G. COCHRAN
DRILLER: J. AKERS

Sample No. and Type or RQD	Depth (Ft.) or Run No.	Blows / 6" or RQD (%)	Sample Recovery / Sample Length	Lithology Change (Depth /Ft.) or Screened Interval	MATERIAL DESCRIPTION: Soil Density/ Consistency or Rock Hardness	Color	Material Classification	USCS*	Remarks	PID/FID Reading (ppm): Sample	Sample BZ	Borehole	Drillers BZ
S-1	1		1.7/			BL	ASPHALT		REFUSAL @ 2' FIRST TRY	1.7	1.7	1.7	1.7
	2		2.0			RD BRN	CLAYEY SILT		REFUSAL 2ND TRY. SS FRAG				
	3						TD 2.0		IN BTM - MOVE HOLE 2'				
	4								REFUSAL @ 2' DAMP @ BTM. FILL				
	5								NO SUB. SPL TAKEN				
	6												
	7												
	8												
	9												
	10												
	11												
	12												
	13												
	14												
	15												
						SAMPLED @	16SS030002 940						
						SAMPLED @	NO SUB SPL TAKEN						

* When rock coring, enter rock brokeness.

** Include monitor reading in 6 foot intervals @ borehole. Increase reading frequency if elevated reponse read.

Remarks:

Drilling Area Background (ppm): 1.7

Converted to Well: Yes ____ No ✓ Well I.D. #: ____

Tetra Tech NUS, Inc.

BORING LOG

PROJECT NAME: NSWC CRANE
PROJECT NUMBER: N9060 CTO 0279
DRILLING COMPANY: BOWSER MORNER
DRILLING RIG: GEOPROBE 54LT

BORING NUMBER: 16 SB04
DATE: 3-27-03
GEOLOGIST: M. G. COCHRAN
DRILLER: J. AKERS

Sample No. and Type or RQD	Depth (FL) or Run No.	Blows / 6" or RQD (%)	Sample Recovery / Sample Length	Lithology Change (Depth /FL) or Screened Interval	MATERIAL DESCRIPTION: Soil Density/ Consistency or Rock Hardness	Color	Material Classification	USCS*	Remarks	PID/FID Reading (ppm): Sample	Sampler BZ	Borehole**	Driller BZ**
S1	1		1.7/	1.0		BL	ASPHALT + GRAVEL			1.7	1.7	1.7	1.7
	2		2.5			BRN	CLAYEY SILT	ML	DAMP, FILL	↓	↓	↓	↓
	3						REFUSAL @ 2.5						
	4												
	5												
	6												
	7												
	8												
	9												
	10												
	11												
	12												
	13												
	14												
	15												
						SAMPLED	16SS040002						
						@	1000						
						SAMPLED	NO SUBSURFACE						
						@	SPL TAKEN						

* When rock coring, enter rock brokeness.

** Include monitor reading in 6 foot intervals @ borehole. Increase reading frequency if elevated reponse read.

Remarks:

Drilling Area Background (ppm): 1.7

Converted to Well: Yes ____ No ✓ Well I.D. #: ____

Tetra Tech NUS, Inc.

BORING LOG

PROJECT NAME: NSWC CRANE
PROJECT NUMBER: N9060 CTO 0279
DRILLING COMPANY: BOWSER MORNER
DRILLING RIG: GEOPROBE 54LT

BORING NUMBER: 16SB05
DATE: 3-27-03
GEOLOGIST: M. G COCHRAN
DRILLER: J. AKERS

Sample No. and Type or RQD	Depth (FL) or Run No.	Blows / 6" or RQD (%)	Sample Recovery / Sample Length	Lithology Change (Depth /FL) or Screened Interval	MATERIAL DESCRIPTION: Soil Density/ Consistency or Rock Hardness	Color	Material Classification	USCS *	Remarks	PID/FID Reading (ppm): Sample	Barrel BZ	Borehole**	Driller BZ
S1	1			1.0		BL	ASPHALT		TOOK 2 CORES FOR	1.7	1.7	1.7	1.7
	2					RD BRN	CLAYEY SILT	ML	DAMP	↓	↓	↓	↓
	3						REFUSAL @ 2'						
	4												
	5												
	6												
	7												
	8												
	9												
	10												
	11												
	12												
	13												
	14												
	15												
						SAMPLED	16SS050002						
						@	1035						
						SAMPLED	NO SUBSURFACE						
						@	SPL TAKEN						

* When rock coring, enter rock brokeness.

** Include monitor reading in 6 foot intervals @ borehole. Increase reading frequency if elevated reponse read.

Remarks:

Drilling Area Background (ppm): 1.7

Converted to Well: Yes ____ No ✓ Well I.D. #: ____

Tetra Tech NUS, Inc.

BORING LOG

PROJECT NAME: NSWC CRANE
PROJECT NUMBER: N9060 CTO 0279
DRILLING COMPANY: BOWSER MORNER
DRILLING RIG: GEOPROBE 54LT

BORING NUMBER: 46SB06
DATE: 3-27-03
GEOLOGIST: M. G. COCHRAN
DRILLER: J AKERS

Sample No. and Type or RQD	Depth (Ft.) or Run No.	Blows / 6" or RQD (%)	Sample Recovery / Sample Length	Lithology Change (Depth /Ft.) or Screened Interval	MATERIAL DESCRIPTION: Soil Density/ Consistency or Rock Hardness	Color	Material Classification	USCS*	Remarks	PID/FID Reading (ppm): Sample	Borehole	Driller BZ*
S1	1			1.0		BL	ASPHALT		TOOK 3 CORES FOR SPL. VOL.	1.7	1.7	1.7
	2					BRN	CLAYEY SILT	ML	DAMP, FILL	↓	↓	↓
	3						REFUSAL @ 2.5'					
	4											
	5											
	6											
	7											
	8											
	9											
	10											
	11											
	12											
	13											
	14											
	15											
						SAMPLED	1653 06.0002					
						@	1055					
						SAMPLED	NO SUBSURFACE					
						@	SPL TAKEN					

* When rock coring, enter rock brokeness.

** Include monitor reading in 6 foot intervals @ borehole. Increase reading frequency if elevated reponse read.

Remarks:

Drilling Area Background (ppm): 1.7

Converted to Well: Yes ____ No ✓ Well I.D. #: ____

Tetra Tech NUS, Inc.

BORING LOG

PROJECT NAME: NSWC CRANE
PROJECT NUMBER: N9060 CTO 0279
DRILLING COMPANY: BOWSER MORNER
DRILLING RIG: GEOPROBE 54 LT

BORING NUMBER: 16SB07
DATE: 3-27-03
GEOLOGIST: M.G. COCHRAN
DRILLER: J. AKERS

Sample No. and Type or RQD	Depth (FL) or Run No.	Blows / 6" or RQD (%)	Sample Recovery / Sample Length	Lithology Change (Depth /FL) or Screened Interval	MATERIAL DESCRIPTION: Soil Density/ Consistency or Rock Hardness	Color	Material Classification	USCS*	Remarks	PID/FID Reading (ppm): Sample	Sampler BZ	Borehole**	Driller BZ
S1	1		1.4/	1.0		BL	ASPHALT		TOOK 3 CORES FOR SPL. VOL.	1.7	1.7	1.7	1.7
	2		2.0			BRN	CLAYEY SILT	ML	DAMP. FILL	↓	↓	↓	↓
	3						REFUSAL @ 2.0						
	4												
	5												
	6												
	7												
	8												
	9												
	10												
	11												
	12												
	13												
	14												
	15												
						SAMPLED	16SS070002						
						@	1100						
						SAMPLED	NO SUBSURFACE						
						@	SPL TAKEN						

* When rock coring, enter rock brokeness.

** Include monitor reading in 6 foot intervals @ borehole. Increase reading frequency if elevated reponse read.

Remarks:

Drilling Area Background (ppm): 1.7

Converted to Well: Yes ____ No ✓ Well I.D. #: ____

Tetra Tech NUS, Inc.

BORING LOG

PROJECT NAME: NSWC CRANE
PROJECT NUMBER: N9060 CTO 0279
DRILLING COMPANY: BOWSER MORNER
DRILLING RIG: GEOPROBE 54LT

BORING NUMBER: 46SB08
DATE: 3-27-03
GEOLOGIST: M. G. COCHRAN
DRILLER: J. AKERS

Sample No. and Type or RQD	Depth (Ft.) or Run No.	Blows / 6" or RQD (%)	Sample Recovery / Sample Length	Lithology Change (Depth /Ft.) or Screened Interval	MATERIAL DESCRIPTION: Soil Density/ Consistency or Rock Hardness	Color	Material Classification	USCS*	Remarks	PID/FID Reading (ppm): Sample	Bkgrd Pre-Spl	Bkgrd Post-Spl	Drilled Hole
	1			1.0		GR.	GRAVEL.		TOOK 3 CORES FOR S.PL. VOL	1.7	1.7	1.7	1.7
	2					BRN	SILTY SAND	SM	SS FRAGS IN SPL. DAMP.	↓	↓	↓	↓
	3						REFUSAL @ 1.5'		FILL				
	4												
	5												
	6												
	7												
	8												
	9												
	10												
	11												
	12												
	13												
	14												
	15												
						SAMPLED 16SS08000Z @ 1330							
						SAMPLED NO SUBSURFACE @ SPL TAKEN							

* When rock coring, enter rock brokeness.

** Include monitor reading in 6 foot intervals @ borehole. Increase reading frequency if elevated reponse read.

Remarks:

Drilling Area Background (ppm): 1.7

Converted to Well: Yes ____ No ✓ Well I.D. #: ____

Tetra Tech NUS, Inc.

BORING LOG

PROJECT NAME: NSWC CRANE
PROJECT NUMBER: N9060 CTO 0279
DRILLING COMPANY: BOWSER MORNER
DRILLING RIG: GEOPROBE 54 LT

BORING NUMBER: 16SB09
DATE: 3-27-03
GEOLOGIST: M. G. COCHRAN
DRILLER: J. AKERS

Sample No. and Type or RQD	Depth (Ft.) or Run No.	Blows / 6" or RQD (%)	Sample Recovery / Sample Length	Lithology Change (Depth /Ft.) or Screened Interval	MATERIAL DESCRIPTION: Soil Density/ Consistency or Rock Hardness	Color	Material Classification	USCS*	Remarks	PID/FID Reading (ppm): Bumpe	Bumpe	Bumpe	Driller BZ
	1		1.31	.5		DK BR	TOPSOIL		TOOK 4 CORES				
						RD BRN	CLAYEY SILT	ML	FOR SPL VOL	1.6	1.6	1.6	1.6
	2		2.0						SS FRAGS BTM	↓	↓	↓	↓
	3						REFUSAL @ 2'		DAMP, FILL				
	4												
	5												
	6												
	7												
	8												
	9												
	10												
	11												
	12												
	13												
	14												
	15												
						SAMPLED	16SS090002						
						@	1355						
						SAMPLED	NO SUBSURFACE						
						@	SPL TAKEN						

* When rock coring, enter rock brokeness.

** Include monitor reading in 6 foot intervals @ borehole. Increase reading frequency if elevated reponse read.

Drilling Area Background (ppm): 1.6

Remarks: FD 03270301 COLLECTED

Converted to Well: Yes ____ No ✓ Well I.D. #: ____

Tetra Tech NUS, Inc.

BORING LOG

PROJECT NAME: NSWC CRANE
PROJECT NUMBER: N9060 CTO 0279
DRILLING COMPANY: BOWSER MORNER
DRILLING RIG: GEOPROBE 54LT

BORING NUMBER: 16SB10
DATE: 3-27-03
GEOLOGIST: MG COCHRAN
DRILLER: J AKERS

Sample No. and Type or RQD	Depth (FL) or Run No.	Blows / 6" or RQD (%)	Sample Recovery / Sample Length	Lithology Change (Depth /FL) or Screened Interval	MATERIAL DESCRIPTION: Soil Density/ Consistency or Rock Hardness	Color	Material Classification	USCS*	Remarks	PID/FID Reading (ppm): Sample	Sample BZ**	Borehole**	Drill BZ**
S1	1		1.3/	.5		DKBR	TOPSOIL		TOOK 3 CORES				
						RDBRN	CLAYEY SILT	ML	FOR SPL VOL.	1.6	1.6	1.6	1.6
	2		2.0						DAMP. FILL	↓	↓	↓	↓
									SS FRAG BTM.				
	3						REFUSAL @ 2'						
	4												
	5												
	6												
	7												
	8												
	9												
	10												
	11												
	12												
	13												
	14												
	15												
						SAMPLED	16SS100002						
						@	1400						
						SAMPLED	NO SUBSURFACE						
						@	SPL TAKEN						

* When rock coring, enter rock brokeness.

** Include monitor reading in 6 foot intervals @ borehole. Increase reading frequency if elevated reponse read.

Remarks:

Drilling Area Background (ppm): 1.6

Converted to Well: Yes ____ No ✓ Well I.D. #: ____

Tetra Tech NUS, Inc.

BORING LOG

PROJECT NAME: NSWC CRANE
PROJECT NUMBER: N9060 CTO 0279
DRILLING COMPANY: BOWSER MORNER
DRILLING RIG: GEOPROBE 54LT

BORING NUMBER: 16 SB 11
DATE: 3-27-03
GEOLOGIST: M.G. COCHRAN
DRILLER: JAKERS

Sample No. and Type or RQD	Depth (FL) or Run No.	Blows / 6" or RQD (%)	Sample Recovery / Sample Length	Lithology Change (Depth /FL) or Screened Interval	MATERIAL DESCRIPTION: Soil Density/ Consistency or Rock Hardness	Color	Material Classification	USCS *	Remarks	PID/FID Reading (ppm): Bkgrd	Sample BZ	Borehole	DH Bkgrd BZ
	1		3.1/			RD BRN	CLAYEY SILT	ML	DAMP, FILL	1.5	1.5	1.5	1.5
S1	2		4.0							↓	↓	↓	↓
	3												
	4		0/						NO RECOVERY				
S2	5		1				REFUSAL @ 5'						
	6												
	7												
	8												
	9												
	10												
	11												
	12												
	13												
	14												
	15												
						SAMPLED 16SS110002							
						@ 1515							
						SAMPLED 16SB110204							
						@ 1520							

* When rock coring, enter rock brokeness.

** Include monitor reading in 6 foot intervals @ borehole. Increase reading frequency if elevated reponse read.

Remarks:

Drilling Area Background (ppm): 1.5

Converted to Well: Yes ____ No ✓ Well I.D. #: ____

Tetra Tech NUS, Inc.

BORING LOG

PROJECT NAME: NSWC CRANE
PROJECT NUMBER: N9060 CTO 0279
DRILLING COMPANY: BOWSER MORNER
DRILLING RIG: GEOPROBE 54LT

BORING NUMBER: 16SB12
DATE: 3-28-03
GEOLOGIST: M. G. COCHRAN
DRILLER: J. AKERS

Sample No. and Type or RQD	Depth (Ft.) or Run No.	Blows / 6" or RQD (%)	Sample Recovery / Sample Length	Lithology Change (Depth /Ft.) or Screened Interval	MATERIAL DESCRIPTION: Soil Density/ Consistency or Rock Hardness	Color	Material Classification	USCS *	Remarks	PID/FID Reading (ppm): Bumpa	Sampler BZ	Background	Drillers BZ**
	1		2.5/			DK BRN	CLAYEY SILT	ML	FILL, DAMP	0	0	0	0
	2		3.5			BRN	CLAYEY SILT			↓	↓	↓	↓
	3												
	4			T.D. 3.5			REFUSAL @ 3.5						
	5												
	6												
	7												
	8												
	9												
	10												
	11												
	12												
	13												
	14												
	15												
						SAMPLED 16SS120002 @ 820							
						SAMPLED 16SB120204 @ 825							

* When rock coring, enter rock brokeness.

** Include monitor reading in 6 foot intervals @ borehole. Increase reading frequency if elevated reponse read.

Remarks:

Drilling Area Background (ppm): 0

Converted to Well: Yes ____ No ✓ Well I.D. #: ____

Tetra Tech NUS, Inc.

BORING LOG

PROJECT NAME: NSWC CRANE
PROJECT NUMBER: N9060 CTO 0279
DRILLING COMPANY: BOWSER MORNER
DRILLING RIG: GEOPROBE 54LT

BORING NUMBER: 46SB13
DATE: 3-28-03
GEOLOGIST: M. G. COCHRAN
DRILLER: J. AKERS

Sample No. and Type or RQD	Depth (Ft.) or Run No.	Blows / 6" or RQD (%)	Sample Recovery / Sample Length	Lithology Change (Depth /Ft.) or Screened Interval	MATERIAL DESCRIPTION: Soil Density/ Consistency or Rock Hardness	Color	Material Classification	USCS *	Remarks	PID/FID Reading (ppm): Sample	Sample Bz	Borehole**	Drill Bz
	1			.5		DK BRN	TOPSOIL		DAMP, FILL	0	0	0	0
S1	2					DK BRN	CLAYEY SILT	ML		↓	↓	↓	↓
	3												
	4						REFUSAL @ 3.5'						
	5												
	6												
	7												
	8												
	9												
	10												
	11												
	12												
	13												
	14												
	15												
						SAMPLED	16SS130002						
						@	800						
						SAMPLED	16SB130204						
						@	805						

* When rock coring, enter rock brokeness.

** Include monitor reading in 6 foot intervals @ borehole. Increase reading frequency if elevated reponse read.

Remarks:

Drilling Area Background (ppm): 0

Converted to Well: Yes ____ No ✓ Well I.D. #: ____

Tetra Tech NUS, Inc.

BORING LOG

PROJECT NAME: NSWC CRANE
PROJECT NUMBER: N9060 CTO 0279
DRILLING COMPANY: BOWSER MORNER
DRILLING RIG: GEOPROBE 54LT

BORING NUMBER: 16SB14
DATE: 3-27-03
GEOLOGIST: M.G. COCHRAN
DRILLER: J. AKERS

Sample No. and Type or RQD	Depth (FL) or Run No.	Blows / 6" or RQD (%)	Sample Recovery / Sample Length	Lithology Change (Depth /FL) or Screened Interval	Soil Density/ Consistency or Rock Hardness	Color	Material Classification	USCS *	Remarks	PID/FID Reading (ppm) Sample	Sample BZ	Bore Hole	Drill BZ**
	1					DKBR	TOPSOIL						
						BRN	CLAYEY SILT		DAMP, FILL	1.6	1.6	1.6	1.6
	2												
	3			T.D. 7'			REFUSAL @ 2'						
	4												
	5												
	6												
	7												
	8												
	9												
	10												
	11												
	12												
	13												
	14												
	15												
						SAMPLED	16SS140002						
						@	1500						
						SAMPLED	NO SUBSURFACE						
						@	SPL TAKEN						

* When rock coring, enter rock brokeness.

** Include monitor reading in 6 foot intervals @ borehole. Increase reading frequency if elevated reponse read.

Remarks:

Drilling Area Background (ppm): 1.6

Converted to Well: Yes ____ No ✓ Well I.D. #: ____

Tetra Tech NUS, Inc.

BORING LOG

PROJECT NAME: NSWC CRANE
PROJECT NUMBER: N9060 CTO 0279
DRILLING COMPANY: BOWSER MORNER
DRILLING RIG: GEOPROBE 54LT

BORING NUMBER: T6SB15
DATE: 3-27-03
GEOLOGIST: M.G. COCHRAN
DRILLER: J. AKERS

Sample No. and Type or RQD	Depth (FL) or Run No.	Blows / 6" or RQD (%)	Sample Recovery / Sample Length	Lithology Change (Depth /FL) or Screened Interval	MATERIAL DESCRIPTION: Soil Density/ Consistency or Rock Hardness	Color	Material Classification	USCS*	Remarks	PID/FID Reading (ppm): Sample	Sample BZ	Borehole**	Borehole BZ
S1	1		1.5/			DK BRN	TOPSOIL CLAYEY SILT	ML	TOOK 3 CORES SPL VOLUME	1.6	1.6	1.6	1.6
	2		1.5				REFUSAL @ 1.5'	↓	DAMP, FILL	↓	↓	↓	↓
	3												
	4												
	5												
	6												
	7												
	8												
	9												
	10												
	11												
	12												
	13												
	14												
	15												
						SAMPLED	16SS150002						
						@	1440						
						SAMPLED	NO SPL						
						@	TAKEN						

* When rock coring, enter rock brokeness.

** Include monitor reading in 6 foot intervals @ borehole. Increase reading frequency if elevated reponse read.

Remarks: MS/MSD SAMPLE TAKEN

Drilling Area Background (ppm): 1.6

Converted to Well: Yes ____ No ✓ Well I.D. #: ____

Tetra Tech NUS, Inc.

BORING LOG

PROJECT NAME: NSWC CRANE
PROJECT NUMBER: N9060 CTO 0279
DRILLING COMPANY: BOWSER MORNER
DRILLING RIG: GEOPROBE 54LT

BORING NUMBER: 16SB16
DATE: 3-27-03
GEOLOGIST: M. G. COCHRA
DRILLER: J. AKERS

Sample No. and Type or RQD	Depth (FL) or Run No.	Blows / 6" or RQD (%)	Sample Recovery / Sample Length	Lithology Change (Depth /FL) or Screened Interval	Soil Density/ Consistency or Rock Hardness	Color	Material Classification	USCS *	Remarks	PID/FID Reading (ppm) Sample	Sample BZ	Borehole**	Driller BZ
S1	1		1.0	.5		DK BRN	TOPSOIL.		TOOK 3 CORES				
						BRN	CLAYEY SILT	ML	FOR SPL VOL	1.5	1.5	1.5	1.5
	2		2.0					↓		↓	↓	↓	↓
	3						REFUSAL @ 2'						
	4												
	5												
	6												
	7												
	8												
	9												
	10												
	11												
	12												
	13												
	14												
	15												
						SAMPLED	16SS160002						
						@	1415						
						SAMPLED	NO SUBSURF						
						@	SPL TAKEN						

* When rock coring, enter rock brokeness.

** Include monitor reading in 6 foot intervals @ borehole. Increase reading frequency if elevated reponse read.

Remarks:

Drilling Area Background (ppm): 1.5

Converted to Well: Yes ____ No ✓ Well I.D. #: ____

Tetra Tech NUS, Inc.

BORING LOG

PROJECT NAME: NSWC CRANE
PROJECT NUMBER: N9060 CTO 0279
DRILLING COMPANY: BOWSER MORNER
DRILLING RIG: GEOPROBE 54LT

BORING NUMBER: T6 SB 17
DATE: 3-27-03
GEOLOGIST: M. G. COCHRAN
DRILLER: J. AKERS

Sample No. and Type or RQD	Depth (Ft.) or Run No.	Blows / 6" or RQD (%)	Sample Recovery / Sample Length	Lithology Change (Depth /Ft.) or Screened Interval	MATERIAL DESCRIPTION: Soil Density/ Consistency or Rock Hardness*	Color	Material Classification	USCS	Remarks	PID/FID Reading (ppm): Sample	Sampler BZ	Borehole**	Drill BZ
S1	1		3.5/	.5		BL RD-BRN	TOPSOIL CLAYEY SILT	ML	TOOK 2 CORES FOR SPL. VOL	1.5	1.5	1.5	1.5
	2		4.0	2.0				↓	DAMP, FILL	↓	↓	↓	↓
	3					RD BN	SHALY SILTSTONE		SOFT, WEATHERED	1.1			
	4												
	5						REFUSAL @ 4'						
	6												
	7												
	8												
	9												
	10												
	11												
	12												
	13												
	14												
	15												
						SAMPLED* 1655 170002 @ 1540							
						SAMPLED 16SB170204 @ 1545							

* When rock coring, enter rock brokeness.

** Include monitor reading in 6 foot intervals @ borehole. Increase reading frequency if elevated reponse read.

Remarks: *DUPLICATE SPL. FD 032703 02

Drilling Area Background (ppm): 1.5

Converted to Well: Yes ____ No ✓ Well I.D. #: ____

Tetra Tech NUS, Inc.

BORING LOG

PROJECT NAME: NSWC CRANE
PROJECT NUMBER: N9060 CTO 0279
DRILLING COMPANY: BOWSER MORNER
DRILLING RIG: GEOPROBE 54LT

BORING NUMBER: 16SB18
DATE: 3-28-03
GEOLOGIST: M G. COCHRAN
DRILLER: J. AKERS

Sample No. and Type or RQD	Depth (Ft.) or Run No.	Blows / 6" or RQD (%)	Sample Recovery / Sample Length	Lithology Change (Depth /Ft.) or Screened Interval	MATERIAL DESCRIPTION: Soil Density/ Consistency or Rock Hardness*	Color	Material Classification**	USCS*	Remarks	PID/FID Reading (ppm): Sampler	Sampler BZ	Bore hole	Driller BZ
	1		2.9			BN	CLAYEY SILT	ML	DAMP, FILL	0	0	0	0
	2		3.5					↓					
	3			3.0									
	4			3.5		BL			BLACK SMEAR @ BTM .5'	0	0	0	0
	5						REFUSAL @ 3.5'		POSSIBLE WASTE MTL?				
	6												
	7												
	8												
	9												
	10												
	11												
	12												
	13												
	14												
	15												
						SAMPLED 16SS180002 @ 1030							
						SAMPLED 16SB180203 @ 1035							

* When rock coring, enter rock brokeness.

** Include monitor reading in 6 foot intervals @ borehole. Increase reading frequency if elevated reponse read.

Remarks:

Drilling Area Background (ppm): 0

Converted to Well: Yes ____ No ✓ Well I.D. #: ____

Tetra Tech NUS, Inc.

BORING LOG

PROJECT NAME: NSWC CRANE
PROJECT NUMBER: N9060 CTO 0279
DRILLING COMPANY: BOWSER MORNER
DRILLING RIG: GEOPROBE 54 LT

BORING NUMBER: 165B19
DATE: 3-28-03
GEOLOGIST: M. G. COCHRAN
DRILLER: J. AKERS

Sample No. and Type or RQD	Depth (Ft.) or Run No.	Blows / 6" or RQD (%)	Sample Recovery / Sample Length	Lithology Change (Depth /Ft.) or Screened Interval	MATERIAL DESCRIPTION: Soil Density/ Consistency or Rock Hardness	Color	Material Classification	USCS*	Remarks	PID/FID Reading (ppm): Sample	Sample BZ	Borehole**	Driller BZ**
	1		2.31			GR. BRN	CLAYEY SILT	ML	DAMP, FILL	0	0	0	0
	2		3.5	2.0						↓	↓	↓	↓
	3					RED BRN			RK FRAGS IN SPL.				
	4						REFUSAL @ 3.5						
	5												
	6												
	7												
	8												
	9												
	10												
	11												
	12												
	13												
	14												
	15												
						SAMPLED 165S19 0002 @ 1040							
						SAMPLED 165D19 0203 @ 1045							

* When rock coring, enter rock brokeness.

** Include monitor reading in 6 foot intervals @ borehole. Increase reading frequency if elevated reponse read.

Remarks:

Drilling Area Background (ppm): 0

Converted to Well: Yes ____ No ✓ Well I.D. #: ____

Tetra Tech NUS, Inc.

BORING LOG

PROJECT NAME: NSWC CRANE
PROJECT NUMBER: N9060 CTO 0279
DRILLING COMPANY: BOWSER MORNER
DRILLING RIG: GEOPROBE 54LT

BORING NUMBER: 16SB20
DATE: 3-28-03
GEOLOGIST: M. G. COCHRAN
DRILLER: J. AKERS

Sample No. and Type or RQD	Depth (FL) or Run No.	Blows / 6" or RQD (%)	Sample Recovery / Sample Length	Lithology Change (Depth /FL) or Screened Interval	Soil Density/ Consistency or Rock Hardness*	Color	Material Classification	USCS*	Remarks	PID/FID Reading (ppm) Sample	Bumper BZ	Bore Hole	Drill Rig BZ
	1			1.0		GR BRN	CLAYEY SILT + GRAVEL	ML	TOOK 2 CORES FOR SPL. VOL	0	0	0	0
S-1	2						WEATHERED SS	↓	DAMP, FILL	↓	↓	↓	↓
	3												
	4						REFUSAL @ 2.5'						
	5												
	6												
	7												
	8												
	9												
	10												
	11												
	12												
	13												
	14												
	15												
						SAMPLED	16SS200002						
						@	1140						
						SAMPLED	NO SPL						
						@	TAKEN						

* When rock coring, enter rock brokeness.

** Include monitor reading in 6 foot intervals @ borehole. Increase reading frequency if elevated reponse read.

Remarks:

Drilling Area Background (ppm): 0

Converted to Well: Yes ____ No ✓ Well I.D. #: ____

Tetra Tech NUS, Inc.

BORING LOG

PROJECT NAME: NSWC CRANE
PROJECT NUMBER: N9060 CTO 0279
DRILLING COMPANY: BOWSER MORNER
DRILLING RIG: GEOPROBE 54LT

BORING NUMBER: 16 SB 21
DATE: 3-28-03
GEOLOGIST: M. G. COCHRAN
DRILLER: J. AKERS

Sample No. and Type or RQD	Depth (Ft.) or Run No.	Blows / 6" or RQD (%)	Sample Recovery / Sample Length	Lithology Change (Depth /Ft.) or Screened Interval	MATERIAL DESCRIPTION: Soil Density/ Consistency or Rock Hardness	Color	Material Classification	USCS*	Remarks	PID/FID Reading (ppm): Bkgrnd	Sample Bz	Borehole Bz	Driller Bz
	1		2.11			BRN	CLAYEY SILT + GRAVEL	ML	TOOK 3 CORES FOR SPL. VOL	0	0	0	0
S1	2		2.5	2.0					DAMP. FILL	↓	↓	↓	↓
	3			2.5		BRN	WEATHERED SS						
	4						REFUSAL @ 2.5						
	5												
	6												
	7												
	8												
	9												
	10												
	11												
	12												
	13												
	14												
	15												
						SAMPLED*	16 SS 21 0002						
						@	1100						
						SAMPLED	No SUB sample						
						@	collected						

* When rock coring, enter rock brokeness.

** Include monitor reading in 6 foot intervals @ borehole. Increase reading frequency if elevated reponse read.

Remarks: * MS/MSD collected @ this location.

Drilling Area Background (ppm): 0

Converted to Well: Yes ____ No ✓ Well I.D. #: ____

Tetra Tech NUS, Inc.

BORING LOG

PROJECT NAME: NSWC CRANE
PROJECT NUMBER: N9060 CTO 0279
DRILLING COMPANY: BOWSER MORNER
DRILLING RIG: GEOPROBE 54 LT

BORING NUMBER: 16SB22
DATE: 3/28/03
GEOLOGIST: M. G. COCHRAN
DRILLER: J. AKERS

Sample No. and Type or RQD	Depth (Ft.) or Run No.	Blows / 6" or RQD (%)	Sample Recovery / Sample Length	Lithology Change (Depth /Ft.) or Screened Interval	Soil Density/ Consistency/ or Rock Hardness	Color	Material Classification	USCS*	Remarks	PID/FID Reading (ppm) Sample	Background	Breathing Zone	Drilling Area
S1	1		2.5/	.5		DK BR BRN	TOPSOIL CLAYEY SILT	ML	DAMP. FILL	0	0	0	0
	2		3.5					↓		↓	↓	↓	↓
	3					LT BRN	WEATHERED S. STONE						
	4						REFUSAL @ 3.5						
	5												
	6												
	7												
	8												
	9												
	10												
	11												
	12												
	13												
	14												
	15												
						SAMPLED	16SS220002						
						@	9 10						
						SAMPLED	16SB220203						
						@	9 15.						

* When rock coring, enter rock brokeness.

** Include monitor reading in 6 foot intervals @ borehole. Increase reading frequency if elevated reponse read.

Remarks:

Drilling Area Background (ppm): 0

Converted to Well: Yes ____ No ✓ Well I.D. #: ____

Tetra Tech NUS, Inc.

BORING LOG

PROJECT NAME: NSWC CRANE
PROJECT NUMBER: N9060 CTO 0279
DRILLING COMPANY: BOWSER MORNER
DRILLING RIG: GEOPROBE 54LT

BORING NUMBER: 16SB23
DATE: 3-28-03
GEOLOGIST: M. G. COCHRAN
DRILLER: J. AKERS

Sample No. and Type or RQD	Depth (FL) or Run No.	Blows / 6" or RQD (%)	Sample Recovery / Sample Length	Lithology Change (Depth /FL) or Screened Interval	MATERIAL DESCRIPTION: Soil Density/ Consistency or Rock Hardness	Color	Material Classification	USCS*	Remarks	PID/FID Reading (ppm): Bumpe	Bumpe BZ	Borehole	Borehole BZ
	1		2.5/			DKBRN	TOPSOIL		TOOK 2 CORES				
						RDBRN	CLAYEY SILT	ML	FOR SPL. VOL	0	0	0	0
S1	2		3.5					↓	DAMP, FILL	↓	↓	↓	↓
	3												
	4						REFUSAL @ 3.5'						
	5												
	6												
	7												
	8												
	9												
	10												
	11												
	12												
	13												
	14												
	15												
						SAMPLED	16SS230002(1)						
						@	1000						
						SAMPLED	16SB230203						
						@	1005 (2)						

* When rock coring, enter rock brokeness.

** Include monitor reading in 6 foot intervals @ borehole. Increase reading frequency if elevated reponse read.

Drilling Area Background (ppm): 0

Remarks: (1) FD032803 01
(2) FD032803 02

Converted to Well: Yes ____ No ✓ Well I.D. #: ____

Tetra Tech NUS, Inc.

BORING LOG

PROJECT NAME: NSWC CRANE
PROJECT NUMBER: N9060 CTO 0279
DRILLING COMPANY: BOWSER MORNER
DRILLING RIG: GEOPROBE 54LT

BORING NUMBER: T6SB24
DATE: 3-28-03
GEOLOGIST: M. G. COCHRAN
DRILLER: J. AKERS

Sample No. and Type or RQD	Depth (FL) or Run No.	Blows / 6" or RQD (%)	Sample Recovery / Sample Length	Lithology Change (Depth /FL) or Screened Interval	MATERIAL DESCRIPTION: Soil Density/ Consistency or Rock Hardness	Color	Material Classification	USCS*	Remarks	PID/FID Reading (ppm): Sample	Sample #2	Borehole	DPHIF BZ
	1		2.2	.5		DK BRN	TOPSOIL						
						RD BRN	CLAYEY SILT	ML	DAMP, FILL	0	0	0	0
	2		3.5					↓		↓	↓	↓	↓
	3								SS. FRAG BTM				
	4						REFUSAL @ 3.5'						
	5												
	6												
	7												
	8												
	9												
	10												
	11												
	12												
	13												
	14												
	15												
						SAMPLED	16SS240002						
						@	940						
						SAMPLED	16SB240203						
						@	945						

* When rock coring, enter rock brokeness.

** Include monitor reading in 6 foot intervals @ borehole. Increase reading frequency if elevated reponse read.

Remarks: GEOPROBE MACROCORE

Drilling Area Background (ppm): 0

Converted to Well: Yes ____ No ✓ Well I.D. #: ____

Tetra Tech NUS, Inc.

BORING LOG

PROJECT NAME: NSWC CRANE
PROJECT NUMBER: N9060 CTO 0279
DRILLING COMPANY: BOWSER MORNER
DRILLING RIG: GEOPROBE 54LT

BORING NUMBER: T6SB25
DATE: 3/28/03
GEOLOGIST: M. G. COCHRAN
DRILLER: J. AKERS

Sample No. and Type or RQD	Depth (Ft.) or Run No.	Blows / 6" or RQD (%)	Sample Recovery / Sample Length	Lithology Change (Depth /Ft.) or Screened Interval	MATERIAL DESCRIPTION: Soil Density/ Consistency or Rock Hardness*	Color	Material Classification	USCS*	Remarks	PID/FID Reading (ppm): Sampler	Sampler BZ	Borehole	Driller BZ
	1		2.4/	.5		DK BRN	TOPSOIL						
						RD BRN	CLAYEY SILT	ML	DAMP, FILL	0	0	0	0
S1	2		3.5						RK FRAGS IN SPL.	↓	↓	↓	↓
	3												
	4						REFUSAL @ 3.5						
	5												
	6												
	7												
	8												
	9												
	10												
	11												
	12												
	13												
	14												
	15												
						SAMPLED	16SS250002						
						@	930						
						SAMPLED	16SB250203						
						@	935						

* When rock coring, enter rock brokeness.

** Include monitor reading in 6 foot intervals @ borehole. Increase reading frequency if elevated reponse read.

Drilling Area Background (ppm): 0

Remarks:

Converted to Well: Yes ____ No ✓ Well I.D. #: ____

Tetra Tech NUS, Inc.

BORING LOG

PROJECT NAME: NSWC CRANE
PROJECT NUMBER: N9060 CTO 0279
DRILLING COMPANY: BOWSER MORNER
DRILLING RIG:

BORING NUMBER: 16SB26/MW05
DATE: 4/9/03
GEOLOGIST: B Parkover
DRILLER: Dave S.

Sample No. and Type or RQD	Depth (Ft.) or Run No.	Blows / 6" or RQD (%)	Sample Recovery / Sample Length	Lithology Change (Depth /Ft.) or Screened Interval	MATERIAL DESCRIPTION: Soil Density/ Consistency or Rock Hardness	Color	Material Classification *	USCS *	Remarks	PID/FID Reading (ppm): Samples	Bumper Bz	Borehole	Drill Bz
	1					BR	r CLAY	CL		00			
	2					Yell OR	1½' SILTY SAND W/S.G	SM					
	3					LT GRY	FRAGS						
S1 W35	4		4" / 4"										
	5						Rock @ 4'						
	6												
	7												
	8												
	9												
	10												
	11												
	12												
	13												
	14												
	15												
						SAMPLED 16SS260002			FD040903-02				
						@ 1038			MS/MSD				
						SAMPLED 16SB260304			FD040903-03				
						@ 1045			MS/MSD				

* When rock coring, enter rock brokeness.

** Include monitor reading in 6 foot intervals @ borehole. Increase reading frequency if elevated reponse read.

Remarks:

Drilling Area Background (ppm):

Converted to Well: Yes ____ No X Well I.D. #: ____

NOT AT TIME OF INITIAL SAMPLING

Tetra Tech NUS, Inc.

BORING LOG

PROJECT NAME: NSWC CRANE
PROJECT NUMBER: N9060 CTO 0279
DRILLING COMPANY: BOWSER MORNER
DRILLING RIG: GEOPROBE 54 LT

BORING NUMBER: T65B27
DATE: 3-28-03
GEOLOGIST: M. G. COCHRAN
DRILLER: J AKERS

Sample No. and Type or RQD	Depth (FL) or Run No.	Blows / 6" or RQD (%)	Sample Recovery / Sample Length	Lithology Change (Depth /FL) or Screened Interval	MATERIAL DESCRIPTION: Soil Density/ Consistency or Rock Hardness	Color	Material Classification	USCS*	Remarks	PID/FID Reading (ppm): Sample	Breathing Zone	Borehole	Drilling Area
	1		2.91	.5		~~PRBL~~ BRN	TOPSOIL CLAYEY SILT W	ML	DAMP, FILL	0	0	0	0
S1	2		3.5				GRAVEL FRAGS	↓		↓	↓	↓	↓
	3			2.5			WEATHERED SS						
	4			3.5									
	5						REFUSAL @ 3.5'						
	6												
	7												
	8												
	9												
	10												
	11												
	12												
	13												
	14												
	15												
						SAMPLED 16SS270002 @ 1120							
						SAMPLED 16SB270203 @ 1125							

* When rock coring, enter rock brokeness.

** Include monitor reading in 6 foot intervals @ borehole. Increase reading frequency if elevated reponse read.

Remarks: MALROCORE

Drilling Area Background (ppm): 0

Converted to Well: Yes ____ No ✓ Well I.D. #: ____

Tetra Tech NUS, Inc.

BORING LOG

PROJECT NAME: NSWC CRANE
PROJECT NUMBER: N9060 CTO 0279
DRILLING COMPANY: BOWSER MORNER
DRILLING RIG: GEOPROBE 54LT

BORING NUMBER: T6SB28
DATE: 3-28-03
GEOLOGIST: M. G. COCHRAN
DRILLER: J. AKERS

Sample No. and Type or RQD	Depth (Ft.) or Run No.	Blows / 6" or RQD (%)	Sample Recovery / Sample Length	Lithology Change (Depth /Ft.) or Screened Interval	MATERIAL DESCRIPTION: Soil Density/ Consistency/ or Rock Hardness	Color	Material Classification	USCS	Remarks	PID/FID Reading (ppm): Sampler	Sampler BZ	Borehole	Driller BZ**
	1			.5		DKBR	TOPSOIL						
						BRN	CLAYEY SILT	ML	DAMP, FILL	0	0	0	0
	2			1.5				↓		↓	↓	↓	↓
	3					BRN	SANDY SILT						
	4			3.5									
	5						REFUSAL @ 3.5						
	6												
	7												
	8												
	9												
	10												
	11												
	12												
	13												
	14												
	15												
						SAMPLED	16SS280002						
						@	1130						
						SAMPLED	16SB280203						
						@	1135						

* When rock coring, enter rock brokeness.

** Include monitor reading in 6 foot intervals @ borehole. Increase reading frequency if elevated reponse read.

Remarks:

Drilling Area Background (ppm): 0-0

Converted to Well: Yes ____ No X Well I.D. #: ____

Tetra Tech NUS, Inc.

BORING LOG

PROJECT NAME: NSWC CRANE
PROJECT NUMBER: N9060 CTO 0279
DRILLING COMPANY: BOWSER MORNER
DRILLING RIG: GEOPROBE 54 LT

BORING NUMBER: 16SB29
DATE: 3/28/03
GEOLOGIST: M. G. COCHRAN
DRILLER: J. AKERS

Sample No. and Type or RQD	Depth (Ft.) or Run No.	Blows / 6" or RQD (%)	Sample Recovery / Sample Length	Lithology Change (Depth /Ft.) or Screened Interval	MATERIAL DESCRIPTION: Soil Density/ Consistency or Rock Hardness*	Color	Material Classification	USCS	Remarks	PID/FID Reading (ppm): Sampler	Sampler BZ	Borehole**	Driller BZ
	1		3.0/			DKBR	TOPSOIL						
						RDBR	CLAYEY SILT	ML	DAMP	0	0	0	0
	2		3.5					↓		↓	↓	↓	↓
	3												
	4						REFUSAL @ 3.5						
	5												
	6												
	7												
	8												
	9												
	10												
	11												
	12												
	13												
	14												
	15												
						SAMPLED	16SS290002						
						@	900						
						SAMPLED	16SB290203						
						@	905						

* When rock coring, enter rock brokeness.

** Include monitor reading in 6 foot intervals @ borehole. Increase reading frequency if elevated reponse read.

Remarks:

Drilling Area Background (ppm): 0

Converted to Well: Yes ____ No ✓ Well I.D. #: ____

Tetra Tech NUS, Inc.

BORING LOG

PROJECT NAME: NSWC CRANE
PROJECT NUMBER: N9060 CTO 0279
DRILLING COMPANY: BOWSER MORNER
DRILLING RIG: GEOPROBE 54LT

BORING NUMBER: 46 SB 30
DATE: 3-28-03
GEOLOGIST: MG COCHRAN
DRILLER: J. AKERS

Sample No. and Type or RQD	Depth (Ft.) or Run No.	Blows / 6" or RQD (%)	Sample Recovery / Sample Length	Lithology Change (Depth /Ft.) or Screened Interval	MATERIAL DESCRIPTION: Soil Density/ Consistency or Rock Hardness*	Color	Material Classification	USCS	Remarks	PID/FID Reading (ppm): Sample	Bunchen BZ	Borehole	Driller BZ
	1		3.1/	.5		DKBN ROCK	TOPSOIL CLAYEY SILT	ML	DAMP, FILL	0	0	0	0
	2		3.0							↓	↓	↓	↓
	3								SS FRAGS @ BTM.				
	4						REFUSAL @ 3'						
	5												
	6												
	7												
	8												
	9												
	10												
	11												
	12												
	13												
	14												
	15												
						SAMPLED 16SS300002 @ 840							
						SAMPLED 16SB300203 @ 845							

* When rock coring, enter rock brokeness.

** Include monitor reading in 6 foot intervals @ borehole. Increase reading frequency if elevated reponse read.

Remarks:

Drilling Area Background (ppm): 0

Converted to Well: Yes ____ No ✓ Well I.D. #: ____

Tetra Tech NUS, Inc.

BORING LOG

PROJECT NAME: NSWC CRANE
PROJECT NUMBER: N9060 CTO 0279
DRILLING COMPANY: BOWSER MORNER
DRILLING RIG: GEOPROBE 54LT

BORING NUMBER: T6 SB 31
DATE: 3-28-03
GEOLOGIST: M. G. COCHRAN
DRILLER: J. AKERS

Sample No. and Type or RQD	Depth (Ft.) or Run No.	Blows / 6" or RQD (%)	Sample Recovery / Sample Length	Lithology Change (Depth /Ft.) or Screened Interval	MATERIAL DESCRIPTION: Soil Density/ Consistency or Rock Hardness*	Color	Material Classification	USCS*	Remarks	PID/FID Reading (ppm): Sample	Sample BZ	Bore Hole	Drill BZ**
S1	1		2.0/	.5		DKBR	TOPSOIL						
						RDBN	CLAYEY SILT	ML	DAMP	0	0	0	0
	2		3.0					↓		↓	↓	↓	↓
	3						REFUSAL @ 3'		SS FRAG @ DTM				
	4												
	5												
	6												
	7												
	8												
	9												
	10												
	11												
	12												
	13												
	14												
	15												
						SAMPLED	16SS310002						
						@	830						
						SAMPLED	NO SPL						
						@	TAK						

* When rock coring, enter rock brokeness.

** Include monitor reading in 6 foot intervals @ borehole. Increase reading frequency if elevated reponse read.

Remarks:

Drilling Area Background (ppm): 0

Converted to Well: Yes ____ No ✓ Well I.D. #: ____

Tetra Tech NUS, Inc.

BORING LOG

PROJECT NAME: NSWC CRANE
PROJECT NUMBER: N9060 CTO 0279
DRILLING COMPANY: BOWSER MORNER
DRILLING RIG:

BORING NUMBER: 16SB32
DATE: 4/9/03
GEOLOGIST: B. BALLOWE
DRILLER: DAVES.

Sample No. and Type or RQD	Depth (FL) or Run No.	Blows / 6" or RQD (%)	Sample Recovery / Sample Length	Lithology Change (Depth /FL) or Screened Interval	MATERIAL DESCRIPTION: Soil Density/ Consistency or Rock Hardness	Color	Material Classification	USCS*	Remarks	PID/FID Reading (ppm): Background	Sample	Sample BZ	Borehole	Drillers BZ
	1				MOIST MSTIFF	BR	CLAY	CL			0.0			
	2													
	3													
SL 1010	4		3.9' / 4'			LT GRAY	SANDY CLAY	CL						
	5			T.D. 4'										
	6													
	7													
	8													
	9													
	10													
	11													
	12													
	13													
	14													
	15													
						SAMPLED 16SS320002			FD040903 01					
						@ 1015			For PCBs					
						SAMPLED 16SB320204								
						@ 1020								

* When rock coring, enter rock brokeness.

** Include monitor reading in 6 foot intervals @ borehole. Increase reading frequency if elevated reponse read.

Drilling Area Background (ppm):

Remarks:

Converted to Well: Yes ____ No X Well I.D. #: ____

Tetra Tech NUS, Inc.

BORING LOG

PROJECT NAME: NSWC CRANE
PROJECT NUMBER: N9060 CTO 0279
DRILLING COMPANY: BOWSER MORNER
DRILLING RIG: ROTO SONIC

BORING NUMBER: 16SB33
DATE: 4/4/03
GEOLOGIST: R BALKOVEC
DRILLER: DAVES.

Sample No. and Type or RQD	Depth (Ft.) or Run No.	Blows / 6" or RQD (%)	Sample Recovery / Sample Length	Lithology Change (Depth /Ft.) or Screened Interval	MATERIAL DESCRIPTION: Soil Density/ Consistency or Rock Hardness	Color	Material Classification	USCS*	Remarks	PID/FID Reading (ppm): Sample	Bam Nozzle	Borehole	Drill Rig
	1				MOIST + SOFT	BR	.5' CLAY	CL		0.0			
	2				DRY +	YELL OR	SILTY SAND W/	SM		↓			
	3				HARD	↓	S.S. FRAGS	↓		↓			
S1 0457	4		3.4'/3.5	T.D. 3.5'									
	5												
	6												
	7												
	8												
	9												
	10												
	11												
	12												
	13												
	14												
	15												
						SAMPLED 16SS330002 @ 1000							
						SAMPLED 16SB330204 @ 1005							

* When rock coring, enter rock brokeness.

** Include monitor reading in 6 foot intervals @ borehole. Increase reading frequency if elevated reponse read.

Remarks:

Drilling Area Background (ppm): 0.0

Converted to Well: Yes ____ No X Well I.D. #: ____

Tetra Tech NUS, Inc.

BORING LOG

PROJECT NAME: NSWC CRANE
PROJECT NUMBER: N9060 CTO 0279
DRILLING COMPANY: BOWSER MORNER
DRILLING RIG: Roto Sonic

BORING NUMBER: 16SB34
DATE: 4/9/03
GEOLOGIST: B. Balkovec
DRILLER: Dave S.

Sample No. and Type or RQD	Depth (Ft.) or Run No.	Blows / 6" or RQD (%)	Sample Recovery / Sample Length	Lithology Change (Depth /Ft.) or Screened Interval	MATERIAL DESCRIPTION: Soil Density/ Consistency or Rock Hardness	Color	Material Classification	USCS*	Remarks	PID/FID Reading (ppm): Sample	Background	Background	Sample
	1				MOIST + SOFT	BR	5" CLAY	CL		0.0			
	2				DRY +	YELLOW	SILTY SAND	SM		↓			
S-1 0245	3		3"/3"		STIFF	↓	W/S.S. FRAGS	↓		↓			
	4			T.D. 3'			REFUSAL @ 3'						
	5												
	6												
	7												
	8												
	9												
	10												
	11												
	12												
	13												
	14												
	15												
						SAMPLED 16SS340002							
						@ 0947							
						SAMPLED 16SB340203							
						@ 0953							

* When rock coring, enter rock brokeness.

** Include monitor reading in 6 foot intervals @ borehole. Increase reading frequency if elevated reponse read.

Remarks:

Drilling Area Background (ppm): 0.0

Converted to Well: Yes ____ No X Well I.D. #: ____

Tetra Tech NUS, Inc.

BORING LOG

Page ___ of ___

PROJECT NAME: NSWC CRANE
PROJECT NUMBER: N9060 CTO 0279
DRILLING COMPANY: BOWSER MORNER
DRILLING RIG: GEOPROBE 54LT

BORING NUMBER: T6SB35
DATE: 3-28-03
GEOLOGIST: M. G. COCHRAN
DRILLER: J. AKERS

Sample No. and Type or RQD	Depth (Ft.) or Run No.	Blows / 6" or RQD (%)	Sample Recovery / Sample Length	Lithology Change (Depth /Ft.) or Screened Interval	MATERIAL DESCRIPTION: Soil Density/ Consistency or Rock Hardness*	Color	Material Classification	USCS*	Remarks	PID/FID Reading (ppm): Sample	Bumper BZ	Borehole	Driller BZ
	1		1.9/	1.0		LT GREY	CLAYEY SILT + GRAVEL		FILL, DAMP	0	0	0	0
	2		2.5			BRN	CLAYEY SILT	ML		↓	↓	↓	↓
	3												
	4						REFUSAL @ 2.5'						
	5												
	6												
	7												
	8												
	9												
	10												
	11												
	12												
	13												
	14												
	15												
						SAMPLED	16SS350002						
						@	1440						
						SAMPLED	NO SPL.						
						@	TAKEN						

* When rock coring, enter rock brokeness.

** Include monitor reading in 6 foot intervals @ borehole. Increase reading frequency if elevated reponse read.

Remarks: _____

Drilling Area Background (ppm): 0

Converted to Well: Yes _____ No ✓ Well I.D. #: _____

Tetra Tech NUS, Inc.

BORING LOG

PROJECT NAME: NSWC CRANE
PROJECT NUMBER: N9060 CTO 0279
DRILLING COMPANY: BOWSER MORNER
DRILLING RIG: ROTO SONIC

BORING NUMBER: 16SB36/MW03
DATE: 4/9/03
GEOLOGIST: B. BALKOVIC
DRILLER: DAVE S.

Sample No. and Type or RQD	Depth (Ft.) or Run No.	Blows / 6" or RQD (%)	Sample Recovery / Sample Length	Lithology Change (Depth /Ft.) or Screened Interval	MATERIAL DESCRIPTION: Soil Density/ Consistency or Rock Hardness	Color	Material Classification	USCS*	Remarks	PID/FID Reading (ppm): Background	Sample Zone	Borehole	Drill Rig
	1				DRY - STIFF	BR	CLAY	CL		0.0			
	2				↓	↓	↓	↓					
S-1 0925	3		2.4'/3'		DRY	YELLOW	SILTY SAND W/ S.S. FRAGS	SM					
	4						REFUSAL @ 3'						
	5												
	6												
	7												
	8												
	9												
	10												
	11												
	12												
	13												
	14												
	15												
						SAMPLED 16SS360002 @ 0930							
						SAMPLED 16SB360203 @ 0940							

* When rock coring, enter rock brokeness.

** Include monitor reading in 6 foot intervals @ borehole. Increase reading frequency if elevated reponse read.

Remarks:

Drilling Area Background (ppm):

Converted to Well: Yes ____ No X Well I.D. #: ____

NOT DURING INITIAL SAMPLING

Tetra Tech NUS, Inc.

BORING LOG

Page ___ of ___

PROJECT NAME: NSWC CRANE
PROJECT NUMBER: N9060 CTO 0279
DRILLING COMPANY: BOWSER MORNER
DRILLING RIG: GEOPROBE 54LT

BORING NUMBER: 76 SB 37
DATE: 3-28-03
GEOLOGIST: M. G. COCHRAN
DRILLER: J. AKERS

Sample No. and Type or RQD	Depth (Ft.) or Run No.	Blows / 6" or RQD (%)	Sample Recovery / Sample Length	Lithology Change (Depth /Ft.) or Screened Interval	MATERIAL DESCRIPTION: Soil Density/ Consistency or Rock Hardness	Color	Material Classification	USCS *	Remarks	PID/FID Reading (ppm): Sample	Sample BZ	Borehole	Drill BZ
S1	1		2.1			LT GREY	CLAYEY SILT+GRAVEL	ML-GP	DAMP, FILL	0	0	0	0
	2		2.5			OR BRN	CLAYEY SILT	ML		↓	↓	↓	↓
	3												
	4						REFUSAL @ 2.5'						
	5												
	6												
	7												
	8												
	9												
	10												
	11												
	12												
	13												
	14												
	15												
						SAMPLED	16SS370002						
						@	1435						
						SAMPLED	NO SPL						
						@	TAKEN						

* When rock coring, enter rock brokeness.

** Include monitor reading in 6 foot intervals @ borehole. Increase reading frequency if elevated reponse read.

Remarks:

Drilling Area Background (ppm): 0

Converted to Well: Yes ____ No ✓ Well I.D. #: ____

Tetra Tech NUS, Inc.

BORING LOG

PROJECT NAME: NSWC CRANE
PROJECT NUMBER: N9060 CTO 0279
DRILLING COMPANY: BOWSER MORNER
DRILLING RIG: GEOPROBE 54LT

BORING NUMBER: 16SB38
DATE: 3-28-03
GEOLOGIST: M. G. COCHRAN
DRILLER: J. AKERS

Sample No. and Type or RQD	Depth (Ft.) or Run No.	Blows / 6" or RQD (%)	Sample Recovery / Sample Length	Lithology Change (Depth /Ft.) or Screened Interval	MATERIAL DESCRIPTION: Soil Density/ Consistency or Rock Hardness	Color	Material Classification	USCS*	Remarks	PID/FID Reading (ppm): Sample	Bottom of Borehole	Breathing Zone	Drill Rig**
	1		3.3/	1.0		GREY	CLAYEY SILT +	ML-GP	DAMP, FILL	0	0	0	0
S1	2		3.5				GRAVEL	ML		↓	↓	↓	↓
	3					BR	CLAYEY SILT						
	4												
	5						REFUSAL @ 3.5'						
	6												
	7												
	8												
	9												
	10												
	11												
	12												
	13												
	14												
	15												
						SAMPLED 16SS380002 @ 1410							
						SAMPLED 16SB380203 @ 1415							

* When rock coring, enter rock brokeness.

** Include monitor reading in 6 foot intervals @ borehole. Increase reading frequency if elevated reponse read.

Remarks:

Drilling Area Background (ppm): 0

Converted to Well: Yes _____ No _____ Well I.D. #: _____

Tetra Tech NUS, Inc.

BORING LOG

PROJECT NAME: NSWC CRANE
PROJECT NUMBER: N9060 CTO 0279
DRILLING COMPANY: BOWSER MORNER
DRILLING RIG: GEOPROBE 54 LT.

BORING NUMBER: 16SB39
DATE: 3-28-03
GEOLOGIST: M. G. COCHRAN
DRILLER: J. AKERS

Sample No. and Type or RQD	Depth (Ft.) or Run No.	Blows / 6" or RQD (%)	Sample Recovery / Sample Length	Lithology Change (Depth /Ft.) or Screened Interval	MATERIAL DESCRIPTION: Soil Density/ Consistency or Rock Hardness	Color	Material Classification	USCS*	Remarks	PID/FID Reading (ppm): Sample	Sample BZ	Sample BZZ	Drill BZZ
	1		2.91	1.0		BRN	CLAYEY SILT +	GP-ML	DAMP, FILL	0	0	0	0
S-1	2		3.5			BRN	GRAVEL FRAGS	ML		↓	↓	↓	↓
	3						CLAYEY SILT		BLACK SMEAR IN BTM, POSSIBLE WASTE				
	4												
	5						REFUSAL @ 3.5						
	6												
	7												
	8												
	9												
	10												
	11												
	12												
	13												
	14												
	15												
						SAMPLED 16SS390002 @ 1400							
						SAMPLED 16SB390203 @ 1405							

* When rock coring, enter rock brokeness.

** Include monitor reading in 6 foot intervals @ borehole. Increase reading frequency if elevated reponse read.

Remarks:

Drilling Area Background (ppm): 0

Converted to Well: Yes ____ No ✓ Well I.D. #: ____

Tetra Tech NUS, Inc.

BORING LOG

PROJECT NAME: NSWC CRANE
PROJECT NUMBER: N9060 CTO 0279
DRILLING COMPANY: BOWSER MORNER
DRILLING RIG: GEOPROBE 54LT

BORING NUMBER: 16SB40
DATE: 3-28-03
GEOLOGIST: M. G. COCHRAN
DRILLER: J. AKERS

Sample No. and Type or RQD	Depth (Ft.) or Run No.	Blows / 6" or RQD (%)	Sample Recovery / Sample Length	Lithology Change (Depth /Ft.) or Screened Interval	Soil Density/ Consistency or Rock Hardness	Color	Material Classification	USCS*	Remarks	PID/FID Reading (ppm) Sample	Sampler BZ	Borehole	Driller BZ**
	1		1.1/	1.0		DK BRN	TOPSOIL	ML	DAMP, FILL TO TD.	0	0	0	0
S1	2		4.0			BRN	CLAYEY SILT						
	3												
	4												
S2	5		2.0/			BRN	CLAYEY SILT		? DAMP-MOIST	0	0	0	0
	6		4.0						* TOOK 2 CORES FOR SPL.				
	7								VOL.				
	8								? MOIST				
	9												
	10												
	11												
	12												
	13												
	14												
	15												
						SAMPLED	16SB400506						
						@	1340						
						SAMPLED*	16SB400608						
						@	1345 DUP						

* When rock coring, enter rock brokeness.

** Include monitor reading in 6 foot intervals @ borehole. Increase reading frequency if elevated reponse read.

Remarks: H_2O LEVEL IN SUMP 5' BGS TD 8' BGS
* FD032803 DUPLICATE SPL.

Drilling Area Background (ppm): 0

Converted to Well: Yes ____ No ✓ Well I.D. #: ____

Tetra Tech NUS, Inc.

BORING LOG

PROJECT NAME: NSWC CRANE
PROJECT NUMBER: N9060 CTO 0279
DRILLING COMPANY: BOWSER MORNER
DRILLING RIG: GEOPROBE 54 LT

BORING NUMBER: 16SB41
DATE: 3-27-03
GEOLOGIST: M. G. COCHRAN
DRILLER: J. AKERS

Sample No. and Type or RQD	Depth (Ft.) or Run No.	Blows / 6" or RQD (%)	Sample Recovery / Sample Length	Lithology Change (Depth /Ft.) or Screened Interval	MATERIAL DESCRIPTION: Soil Density/ Consistency or Rock Hardness*	Color	Material Classification	USCS*	Remarks	PID/FID Reading (ppm): Sample	Sample Bz	Bore Hole**	Drill Hole Bz
S1	1		3.1/	1.0		BL	TOPSOIL		DAMP	1.7	1.7	1.7	1.7
	2		4.0			BRN	CLAYEY SILT.	ML	BRICK MTL. IN SPL.				
	3							↓	FILL				
	4		1.8/						MOIST	1.7	1.7	1.7	1.7
S2	5		4.0										
	6			7.0									
	7					GREY	SILTY CLAY		SATURATED				
	8						TD 8.0						
	9												
	10												
	11												
	12												
	13												
	14												
	15												
						SAMPLED 16SB410305							
						@ 1010							
						SAMPLED 16SB410507							
						@ 1015							

* When rock coring, enter rock brokeness.

** Include monitor reading in 6 foot intervals @ borehole. Increase reading frequency if elevated reponse read.

Drilling Area Background (ppm):

Remarks: HOLE NEAR SUMP. SUMP H2O LEVEL 4' BGS. SUMP BTM 8' BGS.

Converted to Well: Yes _____ No _____ Well I.D. #: _____

D.4

SWMU 16 ROUND 2

WELL NO.: 16MWT07

Tetra Tech NUS, Inc.

BEDROCK MONITORING WELL SHEET WELL INSTALLED IN BEDROCK

PROJECT: NSWC CRANE	LOCATION: CRANE, IN	DRILLER: J. WALSH
PROJECT NO.: 9060	BORING: 16MWT07	DRILLING METHOD: HSA
DATE BEGUN: 11-11-03	DATE COMPLETED: 11-11-03	
FIELD GEOLOGIST: M.G. COCHRAN		DEVELOPMENT METHOD: SURGE/BAILER
GROUND ELEVATION: 760.54	DATUM: NAVD 88	

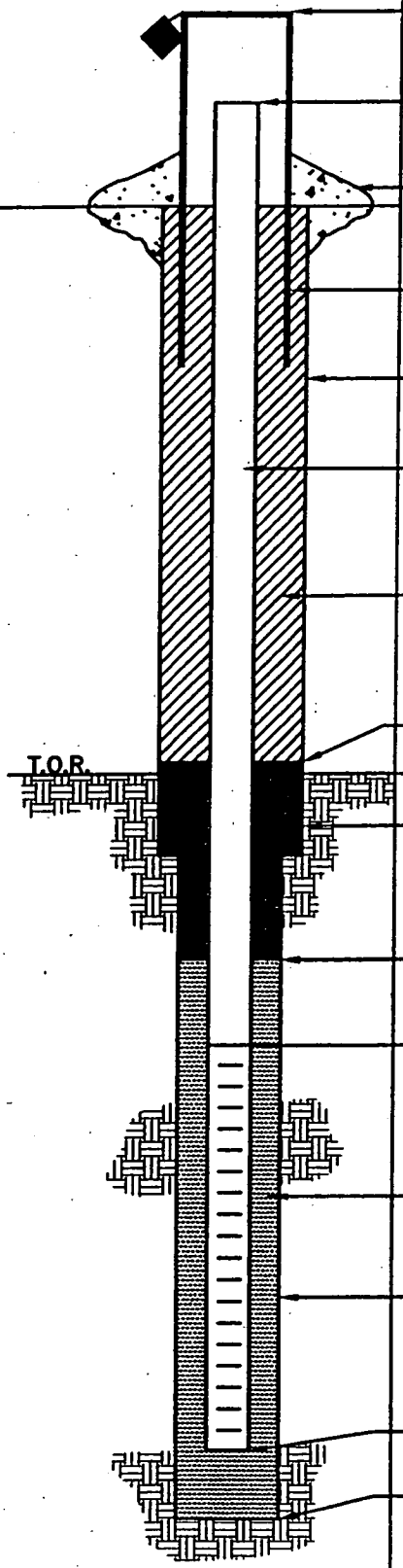

ELEVATION/HEIGHT OF TOP OF SURFACE CASING: 762.94/2.4

ELEVATION/HEIGHT TOP OF RISER: 762.87/2.3

TYPE OF SURFACE SEAL: CONCRETE

I.D. OF SURFACE CASING: 4" x 4" SQ

DIAMETER OF HOLE: 8 1/2"

RISER PIPE I.D.: 2"

TYPE OF RISER PIPE: PVC SLOTTED

TYPE OF BACKFILL: CETCO PURE GOLD MEDIUM BENTONITE CHIPS

ELEVATION/DEPTH TOP OF SEAL: 757.54/3

ELEVATION/DEPTH TOP OF BEDROCK: 754.04/6.5

TYPE OF SEAL: CETCO PURE GOLD MEDIUM BENTONITE CHIPS

ELEVATION/DEPTH TOP OF SAND: 747.54/13

ELEVATION/DEPTH TOP OF SCREEN: 745.54/15

TYPE OF SCREEN: PVC SLOTTED

SLOT SIZE x LENGTH: .020X10'

I.D. SCREEN: 2"

TYPE OF SAND PACK: GLOBAL MEDIUM SAND

DIAMETER OF HOLE IN BEDROCK: 8 1/2"

CORE/REAM:

ELEVATION/DEPTH BOTTOM SCREEN: 735.54/25

ELEVATION/DEPTH BOTTOM OF SAND: 735.04/25.5

ELEVATION/DEPTH BOTTOM OF HOLE: 735.04/25.5

BACKFILL MATERIAL BELOW SAND: N/A

ACAD:FORM_MWNBR.dwg 07/20/99 INL

Tetra Tech NUS, Inc.

BORING LOG

PROJECT NAME: Crane NSWC
PROJECT NUMBER: 9060
DRILLING COMPANY: BOWSER MORNER
DRILLING RIG: CME 550 ATV

BORING No.: 16MWT07
DATE: 11-11-03
GEOLOGIST: M.G. COCHRAN
DRILLER: J. WALSH

Sample No. and Type or RQD	Depth (Ft.) or Run No.	Blows / 6" or RQD (%)	Sample Recovery / Sample Length	Lithology Change (Depth/Ft.) or Screened Interval	MATERIAL DESCRIPTION: Soil Density/ Consistency or Rock Hardness	Color	Material Classification	USCS *	Remarks	PID/FID Reading (ppm): Sample	Sampler BZ	Borehole**	Driller BZ**
							SEE BORING			—	—	—	—
							LOG OF						
							16MWT08 FOR						
							MATERIAL						
							DESCRIPTION						

* When rock coring, enter rock brokeness.

** Include monitor reading in 6 foot intervals @ borehole. Increase reading frequency if elevated reponse read.

Drilling Area Background (ppm): —

Remarks: 8 1/2" OD 4 1/4" ID TO TD
- PID DOWN, WOULD NOT START BACK UP

Converted to Well: Yes ✓ No _____ Well I.D. #: 16MWT07

WELL NO.: 16MWT08

Tetra Tech NUS, Inc.

BEDROCK MONITORING WELL SHEET WELL INSTALLED IN BEDROCK

PROJECT CRANE NSWC	LOCATION SWMU 16	DRILLER JON KEIFER
PROJECT NO. 9060	BORING 16MWT08	DRILLING METHOD ROTO SONIC
DATE BEGUN 11-7-03	DATE COMPLETED 11-9-03	
FIELD GEOLOGIST FRED W. RAMSER		DEVELOPMENT METHOD SURGE/BAILER/WATERA
GROUND ELEVATION 759.57	DATUM NAVD 88	

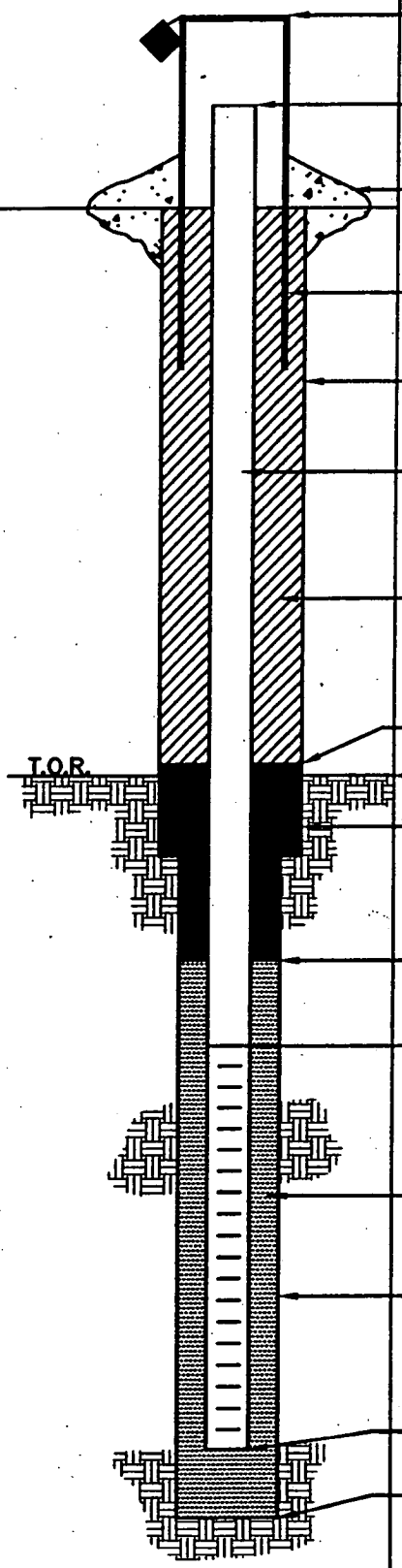

ELEVATION/HEIGHT OF TOP OF SURFACE CASING: 761.~~62~~ 2.1

ELEVATION/HEIGHT TOP OF RISER: 761.56/2.0

TYPE OF SURFACE SEAL: CONCRETE 4'x4'x6"

I.D. OF SURFACE CASING: 4" x 4" SQ

DIAMETER OF HOLE: 11"

RISER PIPE I.D.: 2"

TYPE OF RISER PIPE: SCH.40 PVC

TYPE OF BACKFILL: BENTONITE "PURE GOLD" CHIPS CETCO

6" ISOLATION CASING GROUTED IN USING CEMENT/BENTONITE TO 38.5' BGS.

ELEVATION/DEPTH TOP OF SEAL: 754.57/5'

ELEVATION/DEPTH TOP OF BEDROCK: 753.07/6.5'

TYPE OF SEAL: BENTONITE PURE GOLD CHIP CETCO

ELEVATION/DEPTH TOP OF SAND: 677.57/82

ELEVATION/DEPTH TOP OF SCREEN: 674.57/85

TYPE OF SCREEN: PVC

SLOT SIZE x LENGTH: 0.02 x 10'

I.D. SCREEN: 2"

TYPE OF SAND PACK: QTZ SAND 10/30 SEP / 18B

DIAMETER OF HOLE IN BEDROCK: 5"

CORE/REAM: CORE

ELEVATION/DEPTH BOTTOM SCREEN: 664.57/95

ELEVATION/DEPTH BOTTOM OF SAND: 660.57/99

ELEVATION/DEPTH BOTTOM OF HOLE: 660.57/99

BACKFILL MATERIAL BELOW SAND: NONE

ACAD: FORM_MWINBR.dwg 07/28/99 INL

Tetra Tech NUS, Inc.

BORING LOG

PROJECT NAME: Crane NSWC
PROJECT NUMBER: 9060
DRILLING COMPANY: BOWSER MORNER
DRILLING RIG: VERSA-SONIC

BORING No.: 16MWT08
DATE: 11-7-03
GEOLOGIST: FRED W RAMSER
DRILLER: DENNIS SINK

Sample No. and Type or RQD	Depth (Ft.) or Run No.	Blows / 6" or RQD (%)	Sample Recovery / Sample Length	Lithology Change (Depth/Ft.) or Screened Interval	Soil Density/ Consistency or Rock Hardness	Color	Material Classification	USCS*	Remarks	PID/FID Reading (ppm) Sample	Sampler BZ	Borehole**	Driller BZ**
							MOD BRN SILT + CLAY		TOP SOIL				
							↓ + f-g SAND		GRAVELS MOIST				
						BRN	GRADING TO			12			
							A DECOMPOSED		RELEC LAM.				
	5						SANDSTONE		W/SILTSTONE				0
							LGT YEL BRN		WEATHERED				
							W/GREY + BRN		SANDSTONE				
				TOP OF BDRK									
					MED SOFT		SANDSTONE - LAM. LO & FRAC.		FE STAIN IN IRREGULAR LAM				
	10				SOFT	LT GREY	MUDSTONE W/	BR					
						BRN	STIFF CLAY			142			
						YEL BRN	10'-11'						
							SOFT TO						
C-1		30%					MED STIFF						0
	15						CLAY+SILT						
							(STRONGLY WEATHERED						
							MUDSTONE)			16			
			7.5/10		MED SOFT	YEL BRN	SANDSTONE - LAM FE STAIN	V					
	20				MED SOFT	GREY	SILT STONE	V.BR	FRIABLE				0
							GRADES TO BLK LAM. GREY + BLK		STRONGLY WEATHERED @ 20-20.5 V. SOFT				
					SOFT	DK GREY	MUD STONE						
S-2						YEL	SANDSTONE		WEATHERED	16			
						BRN	ABUNDANT FE STAIN LAM.	V.BR					
	25	10%											

* When rock coring, enter rock brokeness.

** Include monitor reading in 6 foot intervals @ borehole. Increase reading frequency if elevated reponse read.

Drilling Area Background (ppm): 0

Remarks: SET CASING @ 38.5' BGS. USING 8' ID DRILL PIPE (11" OUTSIDE DIA)

Converted to Well: Yes ✓ No ____ Well I.D. #: 16MWT08

Tetra Tech NUS, Inc.

BORING LOG

PROJECT NAME: Crane NSWC
PROJECT NUMBER: 9060
DRILLING COMPANY: BAUSER MORNER
DRILLING RIG: VERSA SONIC

BORING No.: 16MWT08
DATE: 11-7-03
GEOLOGIST: FRED WRAMSER
DRILLER: DENNIS SINK

Sample No. and Type or RQD	Depth (Ft.) or Run No.	Blows / 6" or RQD (%)	Sample Recovery / Sample Length	Lithology Change (Depth/Ft.) or Screened Interval	MATERIAL DESCRIPTION: Soil Density/ Consistency or Rock Hardness	Color	Material Classification	USCS*	Remarks	PID/FID Reading (ppm): Sample	Sampler BZ	Borehole**	Driller BZ**
S-2					MED SOFT	YEL BRN	SANDSTONE		LESS WEATHERED				
									DOWNWARD				
			6.5/10							5			
					MED HARD	YEL	SAND STONE	BR					
	30					BRN	ABUNDANT						0
							FUGS						
S-3							LAM. TO			48			
		10%					THINLY						
						DK BRN	BEDDED						0
	35					35-37	LOS FRAC.						
							TO HOR.						
							X-BEDDING						
			6.5/10							6			
	40				SOFT	LT GREY	MUD STONE	BL					0
							ROCK FRAG						
							OF CLAY + SILTSTONE						
					SOFT	DK GREY	MUD STONE			10			
S-4							ROCK FRAG						
	45	95%					OF CLAYSTONE						0
							+ SILTSTONE						
			10/10							12			
	50				SOFT	DK GRAY	CLAYEY SILTSTONE						

* When rock coring, enter rock brokeness.

** Include monitor reading in 6 foot intervals @ borehole. Increase reading frequency if elevated reponse read.

Drilling Area Background (ppm): 0

Remarks: BEGAN DRILLING BELOW CASING 11-8-04
START @ 39' → FINISH @ 79' 11-8-04

Converted to Well: Yes ✓ No _____ Well I.D. #: 16MWT08

Tetra Tech NUS, Inc.

BORING LOG

PROJECT NAME: Crane NSWC
PROJECT NUMBER: 9060
DRILLING COMPANY: BOWSER MORNER
DRILLING RIG: VERSA-SONIC

BORING No.: 16MWT08
DATE: 11-8-03
GEOLOGIST: FRED W RAMSER
DRILLER: DENNIS SINK

Sample No. and Type or RQD	Depth (Ft.) or Run No.	Blows / 6" or RQD (%)	Sample Recovery / Sample Length	Lithology Change (Depth/Ft.) or Screened Interval	Soil Density/ Consistency or Rock Hardness	Color	Material Classification	USCS *	Remarks	PID/FID Reading (ppm) Sample	Sampler BZ	Borehole**	Driller BZ*
					SOFT	DK GREY	CLAYEY SILTSTONE	V.BR					
							-FISSIL			10			
							-LAM. TO						
							V. THIN BEDDED					0	
S5	55	9/4					-PLANT FOSSILS						
							(BLK) ABUNDANT						
					SOFT	MED GREY	SANDY SILTSTONE			8			
							-FISSIL						
			5/10				-LAM. TO V. THIN BEDS.					0	
	60				SOFT	DK	CLAYEY SILTSTONE	V.BR					
						GREY	-FISSIL						
							-LAM. TO V. THIN BEDS			13		0	
S-6		5/10				DK	SANDY SILTSTONE						
	65					GREY	VUGS						
							IRREGULAR LAM						
					SOFT	BR	CLAYEY SILTSTONE			14			
							LAM. (V. FINE)						
			5/10									0	
	70				SOFT	DK	CLAYEY SILTSTONE	BL					
						GREY	BLOCKY W/ROCK						
							FRAG.						
S-7						DK GREY	SILTSTONE	V.BR				0	
							LAM. TO V. THIN			10			
	75						BEDDED						

* When rock coring, enter rock brokeness.

** Include monitor reading in 6 foot intervals @ borehole. Increase reading frequency if elevated reponse read.

Drilling Area Background (ppm): 0

Remarks:

Converted to Well: Yes ✓ No _____ Well I.D. #: 16MWT08

Tetra Tech NUS, Inc.

BORING LOG

PROJECT NAME: Crane NSWC
PROJECT NUMBER: 9060
DRILLING COMPANY: BOWSER MORNER
DRILLING RIG: VERSA-SONIC

BORING No.: 16MW108
DATE: 11-8-03
GEOLOGIST: FRED W. RAMSER
DRILLER: JON REIFER

Sample No. and Type or RQD	Depth (Ft.) or Run No.	Blows / 6" or RQD (%)	Sample Recovery / Sample Length	Lithology Change (Depth/Ft.) or Screened Interval	Soil Density/ Consistency or Rock Hardness	Color	Material Classification	USCS*	Remarks	PID/FID Reading (ppm) Sample	Sampler BZ	Borehole**	Driller BZ**
					SOFT	DK GREY	CLAYEY SILTSTONE	V.BR					
		30%					LAM. TO V.THINLY			12			
							BEDDED						
			9/10						HIT HARD SAND STONE @ 79'				
	80				HARD	LT GRY	SAND STONE	BR					
							MED BEDDED CLAYEY						
						DK	SILTSTONE	V.BR		11			
						GREY	LAM. TO V.THIN						
S-8							BEDS						
	85	25%											
					MED HARD	GREY	SILTY SANDSTONE	BR					
							LAM TO THIN						
							BEDDED						
			9.5/10				PLANT FOSSILS		GRADES TO	12			
	90								SANDY SILT STONE				
					SOFT	GREY	SANDY SILTSTONE	BR					
							LAM.						
					SOFT	DK	SILTSTONE	V.BR					
						GREY	CLAYEY						
S-9	95	0%					LAM. V.THIN						
							BEDDED						
	9												
					MED	GREY	SANDY SILTSTON	BR					
			8.5/10		HARD		LAM. TO V.THIN						
							BEDS.						

* When rock coring, enter rock brokeness.

** Include monitor reading in 6 foot intervals @ borehole. Increase reading frequency if elevated reponse read.

Drilling Area Background (ppm): 0

Remarks: SCREEN 85-95 SAND 82-99, 11-9-03

Converted to Well: Yes ✓ No _____ Well I.D. #: 16MW108

WELL NO.: 16MWT09

Tetra Tech NUS, Inc.

BEDROCK MONITORING WELL SHEET WELL INSTALLED IN BEDROCK

PROJECT NSWC CRANE	LOCATION CRANE IN	DRILLER BOWSER-MORNER
PROJECT NO. 9060	BORING 16MWT09	DRILLING METHOD HSA
DATE BEGUN 11-8-03	DATE COMPLETED 11-8-03	
FIELD GEOLOGIST M.G. COCHRAN		DEVELOPMENT METHOD SURGE/BAILER
GROUND ELEVATION 762.43	DATUM NAVD 88	

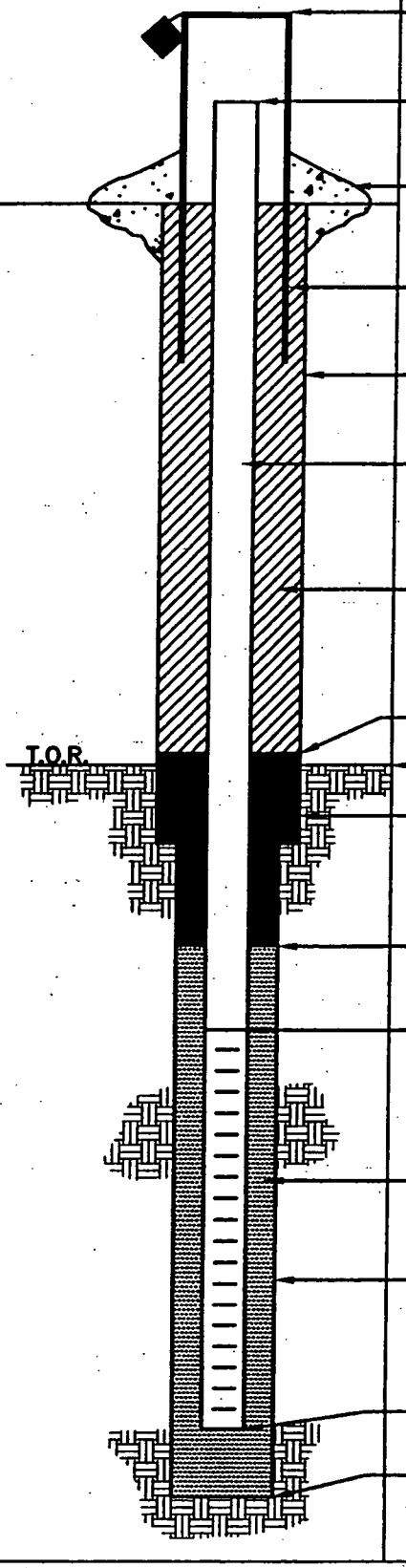

ELEVATION/HEIGHT OF TOP OF SURFACE CASING: 764.47/2.1

ELEVATION/HEIGHT TOP OF RISER: 764.28/1.9

TYPE OF SURFACE SEAL: CONCRETE

I.D. OF SURFACE CASING: 4" x 4" SQ STEEL

DIAMETER OF HOLE: 8 1/2"

RISER PIPE I.D.: 2"

TYPE OF RISER PIPE: PVC SCHEDULE 40

TYPE OF BACKFILL: CETCO PURE GOLD MEDIUM CHIPS

ELEVATION/DEPTH TOP OF SEAL: 759.43/3

ELEVATION/DEPTH TOP OF BEDROCK: 755.43/7

TYPE OF SEAL: CETCO PURE GOLD MEDIUM CHIPS

ELEVATION/DEPTH TOP OF SAND: 749.43/13

ELEVATION/DEPTH TOP OF SCREEN: 747.43/15

TYPE OF SCREEN: PVC

SLOT SIZE x LENGTH: .020 X 10'

I.D. SCREEN: 2"

TYPE OF SAND PACK: BEST MEDIUM SAND

DIAMETER OF HOLE IN BEDROCK: 8 1/2"

CORE/REAM:

ELEVATION/DEPTH BOTTOM SCREEN: 737.43/25

ELEVATION/DEPTH BOTTOM OF SAND: 737.43/25

ELEVATION/DEPTH BOTTOM OF HOLE: 737.43/25

BACKFILL MATERIAL BELOW SAND: NA

ACAD:FORM_MWINBR.dwg 07/20/99 INL

Tetra Tech NUS, Inc.

BORING LOG

PROJECT NAME: Crane NSWC
PROJECT NUMBER: 9060
DRILLING COMPANY: BOWSER-MORNER
DRILLING RIG: CME 550 ATV

BORING No.: 16MWT09
DATE: 11-8-03
GEOLOGIST: M. G. COCHRAN
DRILLER: J. WALSH

Sample No. and Type or RQD	Depth (Ft.) or Run No.	Blows / 6" or RQD (%)	Sample Recovery / Sample Length	Lithology Change (Depth/Ft.) or Screened Interval	MATERIAL DESCRIPTION: Soil Density/ Consistency or Rock Hardness	Color	Material Classification	USCS*	Remarks	PID/FID Reading (ppm): Sample	Sampler BZ	Borehole**	Driller BZ**
	0					BR	TOPSOIL			—	—	0	0
						BR	CLAY + SILT						
	5												
				7.0		BR	SHALE BEDROCK						
	10												
	15												
	20												
	25						TD 25'						

* When rock coring, enter rock brokeness.

** Include monitor reading in 6-foot intervals @ borehole. Increase reading frequency if elevated reponse read.

Drilling Area Background (ppm): 0

Remarks: HSA 4¼ ID, 8½ OD TO TD

Converted to Well: Yes ✓ No _____ Well I.D. #: 16MWT09

WELL NO.: 16MWT10

Tetra Tech NUS, Inc.

BEDROCK MONITORING WELL SHEET WELL INSTALLED IN BEDROCK

PROJECT CRANE	LOCATION CRANE IN	DRILLER J. WALSH
PROJECT NO. 9060	BORING 16MWT10	DRILLING METHOD HSA
DATE BEGUN 11/9/03	DATE COMPLETED 11-9-03	
FIELD GEOLOGIST M. G. COCHRAN		DEVELOPMENT METHOD BAILER/ SURGE/ PUMP
GROUND ELEVATION 761.93	DATUM NAVD 88	

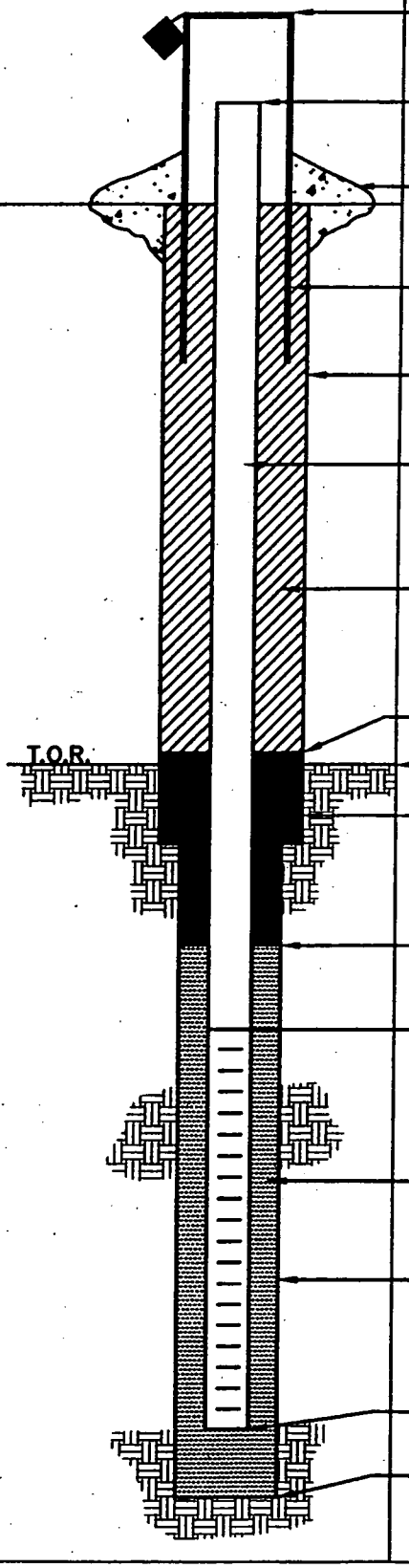

ELEVATION/HEIGHT OF TOP OF SURFACE CASING: 764.48/ 2.5

ELEVATION/HEIGHT TOP OF RISER: 764.43/ 2.5

TYPE OF SURFACE SEAL: CONCRETE

I.D. OF SURFACE CASING: 4" x 4" SQ STEEL

DIAMETER OF HOLE: 8 1/2"

RISER PIPE I.D.: 2"

TYPE OF RISER PIPE: PVC SCH 40

TYPE OF BACKFILL: CETCO PURE GOLD BENTONITE CHIPS

ELEVATION/DEPTH TOP OF SEAL: 758.93/ 3

ELEVATION/DEPTH TOP OF BEDROCK: 753.43 8.5'

TYPE OF SEAL: CETCO PURE GOLD BENTONITE CHIPS

ELEVATION/DEPTH TOP OF SAND: 749.93/ 12

ELEVATION/DEPTH TOP OF SCREEN: 747.93/ 14

TYPE OF SCREEN: PVC SLOTTED

SLOT SIZE x LENGTH: .020 x 10'

I.D. SCREEN: 2"

TYPE OF SAND PACK: GLOBAL MEDIUM SAND

DIAMETER OF HOLE IN BEDROCK: 8 1/2

CORE/REAM:

ELEVATION/DEPTH BOTTOM SCREEN: 737.93/ 24

ELEVATION/DEPTH BOTTOM OF SAND: 736.93/ 25

ELEVATION/DEPTH BOTTOM OF HOLE: 736.93/ 25

BACKFILL MATERIAL BELOW SAND: NA

ACAD:FORM_MWINBR.dwg 07/20/99 INL

Tetra Tech NUS, Inc.

BORING LOG

PROJECT NAME: Crane NSWC
PROJECT NUMBER: 9060
DRILLING COMPANY: BOWSER-MORNER
DRILLING RIG: CME 550 ATV

BORING No.: 16MWT10
DATE: 11-9-03
GEOLOGIST: M. G. COCHRAN
DRILLER: J WALSH

Sample No. and Type or RQD	Depth (Ft.) or Run No.	Blows / 6" or RQD (%)	Sample Recovery / Sample Length	Lithology Change (Depth/Ft.) or Screened Interval	MATERIAL DESCRIPTION: Soil Density/ Consistency or Rock Hardness	Color	Material Classification	USCS *	Remarks	PID/FID Reading (ppm): Sample	Sampler BZ	Borehole**	Driller BZ**
							SEE LOG					0	0
							16MWT11 FOR						
							DESCRIPTION						
							TD 25						

* When rock coring, enter rock brokeness.

** Include monitor reading in 6 foot intervals @ borehole. Increase reading frequency if elevated reponse read.

Drilling Area Background (ppm): 0

Remarks:

Converted to Well: Yes ✓ No ____ Well I.D. #: 16MWT10

WELL NO.: 16MW11

Tetra Tech NUS, Inc.

BEDROCK MONITORING WELL SHEET WELL INSTALLED IN BEDROCK

PROJECT CRANE
PROJECT NO. 9060
DATE BEGUN 11-8-03
FIELD GEOLOGIST FRED W RAMSER
GROUND ELEVATION 763.23
LOCATION SWMU 16
BORING 16MWT11
DATE COMPLETED 11-11-03
DATUM NAVD88

DRILLER JON KEIFER
DRILLING METHOD ROTO-SONIC
DEVELOPMENT METHOD BAILER/PURGE

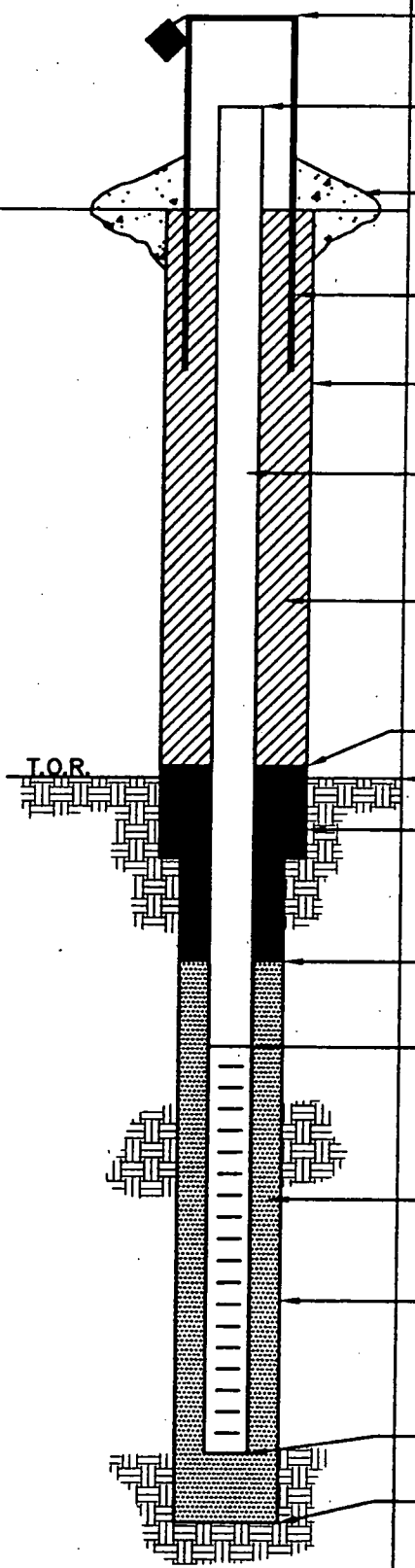

ELEVATION/HEIGHT OF TOP OF SURFACE CASING: 765.47/2.24

ELEVATION/HEIGHT TOP OF RISER: 765.24/2.0

TYPE OF SURFACE SEAL: CONCRETE 4'x4'x6"

I.D. OF SURFACE CASING: 4"x4" SQ

DIAMETER OF HOLE: 11"

RISER PIPE I.D.: 2"
TYPE OF RISER PIPE: SCH. 40 PVC

TYPE OF BACKFILL: BENTONITE "PURE GOLD" CHIPS CETCO, 6" ISOLATION CASING GROUTED IN USING CEMENT/BENTONITE TO 38' BGS

ELEVATION/DEPTH TOP OF SEAL: 758.23/5'

ELEVATION/DEPTH TOP OF BEDROCK: 754.73/8.5'

TYPE OF SEAL: BENTONITE PURE GOLD CHIPS CETCO

ELEVATION/DEPTH TOP OF SAND: 680.23/83

ELEVATION/DEPTH TOP OF SCREEN: 677.23/86
TYPE OF SCREEN: PVC
SLOT SIZE x LENGTH: 0.02 x 10'
I.D. SCREEN: 2"

TYPE OF SAND PACK: QTZ SAND 10/30 SEP/18B

DIAMETER OF HOLE IN BEDROCK: 5"
CORE/REAM: CORE

ELEVATION/DEPTH BOTTOM SCREEN: 667.23/96
ELEVATION/DEPTH BOTTOM OF SAND: 665.23/98
ELEVATION/DEPTH BOTTOM OF HOLE: 665.23/98
BACKFILL MATERIAL BELOW SAND: NONE

ACAD:FORM_MWINBR.dwg 07/28/99 INL

Tetra Tech NUS, Inc.

BORING LOG

PROJECT NAME: Crane NSWC
PROJECT NUMBER: 9060
DRILLING COMPANY: BOWSER MORNER
DRILLING RIG: VERSA SONIC

BORING No.: 16MWT11
DATE: 11-8-03
GEOLOGIST: FRED W. RAMSER
DRILLER: JON KEIFER

Sample No. and Type or RQD	Depth (Ft.) or Run No.	Blows / 6" or RQD (%)	Sample Recovery / Sample Length	Lithology Change (Depth/Ft.) or Screened Interval	Soil Density/ Consistency or Rock Hardness	Color	Material Classification	USCS*	Remarks	PID/FID Reading (ppm) Sample	Sampler BZ	Borehole**	Driller BZ**
					STIFF	MED BRN	CLAYEY SAND TOP SOIL	SC/SM	4" VIBRO CORE				
							f-g + SILT		SPL				
					LOOSE								
S-1							SILT GRADES FROM						
						MED BRN	DEC. BORK TO						
	5						STRONGLY WEATHERED						
						YEL BRN	BORK TO 7.5' SAND STONE		MOTTLED:				
					MED SOFT		7.5' - 8.5'		Fe STAINING				
			8.5/8.5				WEATHERED BORK SAND STONE		GREY, ORG.				
				TOP OF BORK @ 8.5'					RELIC LAM.				
	10				VERY SOFT	YEL BRN	MUDSTONE	V.BR	UNCONSOLIDATED				
									DECOMPOSED?				
					VERY SOFT	GREY	MUDSTONE						
S-2		5%											
					SOFT	PALE RED	SANDSTONE f-g		WEATHERED				
	15				VERY		LAM. - V.F. BEDDING	V.BR					
					SOFT	GREYISH RED	SANDSTONE						
							F. GRAIN. LAM. - V.F. BEDDING						
			8/10										
	20				SOFT	GREY	SANDY SILTSTONE	V.BR					
						DK GREY	LAM.		GRADES				
S-3							V. FINE BEDDING		TO A				
		0%					ALT DK GREY		SILTSTONE				
							+ GREY		DOWNWARD				
	25						LAM.		TO A CLAYEY SILTSTONE				

* When rock coring, enter rock brokeness.
** Include monitor reading in 6 foot intervals @ borehole. Increase reading frequency if elevated reponse read.

Drilling Area Background (ppm): —

Remarks: USED 4"Ø ID DRILL PIPE w/CORE BIT TO SPL. 10' RUNS
USED 8"Ø ID DRILL PIPE TO INSTALL 6" PSD. INTO A 11" HOLE
INSTALLED WELL 11-11-03

Converted to Well: Yes ✓ No _____ Well I.D. #: 16MWT11

Tetra Tech NUS, Inc.

BORING LOG

PROJECT NAME: Crane NSWC
PROJECT NUMBER: 9060
DRILLING COMPANY: BOWSER MORNER
DRILLING RIG: VERSA SONIC

BORING No.: 16MWT11
DATE: 11-8-03
GEOLOGIST: FRED WRAMSER
DRILLER: JON KEIFER

Sample No. and Type or RQD	Depth (Ft.) or Run No.	Blows / 6" or RQD (%)	Sample Recovery / Sample Length	Lithology Change (Depth/Ft.) or Screened Interval	MATERIAL DESCRIPTION: Soil Density/ Consistency or Rock Hardness	Color	Material Classification	USCS*	Remarks	PID/FID Reading (ppm): Sample	Sampler BZ	Borehole**	Driller BZ**
Q3 CONT					SOFT	DK GREY	CLAYEY SILT STONE	V. BR	(SHALE)				
					SOFT	DK GREY	MUDSTONE						
	30				SOFT	DK GREY	CLAYEY SILT STONE	V. BR / BR					
S4		54%					IRREGULAR LAM.						
	35								POOR REC. MAY BE DUE TO COAL BED OR V. BRITTLE				
	38		2.5/10						SHALE FALLING OUT OF DRILL PIPE				
	40				MED SOFT		SANDY SILTSTONE	V. BR	BLACK CUTTINGS				
					SOFT		MUDSTONE LAM. DK GRY ALT LT GREY OCC. FOSSIL	BL	SEEN WHEN DRILLING W/ 8" PIPE				
S-5		20%			MED SOFT	LT. GREY	SANDSTONE						
	45						CROSS BEDDING OCC PLANT FOSSIL	BL	BEGIN TO DRILL BELOW				
							BLK ON LAM.		ISO CASING				
							F. BEDDED		11-11-03				
			7.0/10				LO ∆ FRAC.		OCC. VUGS.				
	50				SOFT	DK GREY	CLAYEY SILTSTONE	V. BR					

* When rock coring, enter rock brokeness.

** Include monitor reading in 6 foot intervals @ borehole. Increase reading frequency if elevated reponse read.

Drilling Area Background (ppm): —

Remarks: STARTED WELL 11-8-03 INSTALLED 6" ISO CASING. CONT. DRILLING BELOW CASING 11-11-03 @ 38' BGS STEADY RAIN PID NOT USED 11-11-03

Converted to Well: Yes ✓ No _____ Well I.D. #: 16MWT11

Tetra Tech NUS, Inc.

BORING LOG

PROJECT NAME: Crane NSWC
PROJECT NUMBER: 9060
DRILLING COMPANY: BOWSER MORNER
DRILLING RIG: VERSA-SONIC

BORING No.: 16MWT 11
DATE: 11-11-03
GEOLOGIST: FRED W RAMSER
DRILLER: JON KEIFER

Sample No. and Type or RQD	Depth (FL) or Run No.	Blows / 6" or RQD (%)	Sample Recovery / Sample Length	Lithology Change (Depth/Ft.) or Screened Interval	Soil Density/ Consistency or Rock Hardness	Color	Material Classification	USCS *	Remarks	PID/FID Reading (ppm) Sample	Sampler BZ	Borehole**	Driller BZ**
	50				SOFT	DK GREY	CLAYSILTSTONE	V.BR					
S-6							FISSIL						
							LAM. TO						
		0%					V. FINEBED.						
	55												
			10/10										
					SOFT	DK GREY	AS ABOVE	V.BR					
	60												
		0%											
S-7													
	65												
			10/10										
					SOFT	BLK	CLAYEY SILTSTONE	V.BR					
	70						FISSIL. LAM.						
							TO V.F. BEDDED						
S-8													
		20%			HARD	LT GREY	SAND STONE	BR					
							POOR BEDDING						
	75						SMALL BEDS						

* When rock coring, enter rock brokeness.

** Include monitor reading in 6 foot intervals @ borehole. Increase reading frequency if elevated reponse read.

Drilling Area Background (ppm): —

Remarks: STEADY RAIN PID NOT USED 11-11-03

Converted to Well: Yes ✓ No _____ Well I.D. #: 16MWT 11

Tetra Tech NUS, Inc.

BORING LOG

PROJECT NAME: Crane NSWC
PROJECT NUMBER: 9060
DRILLING COMPANY: BOWSER MORNER
DRILLING RIG: VERSA SONIC

BORING No.: 16 MWT 11
DATE: 11-11-03
GEOLOGIST: FRED WRAMSER
DRILLER: JON KEIFER

Sample No. and Type or RQD	Depth (Ft.) or Run No.	Blows / 6" or RQD (%)	Sample Recovery / Sample Length	Lithology Change (Depth/Ft.) or Screened Interval	Soil Density/ Consistency or Rock Hardness	Color	Material Classification	USCS *	Remarks	PID/FID Reading (ppm) Sample	Sampler BZ	Borehole**	Driller BZ**
	75				HARD	LT GREY	SAND STONE	BI					
			7.5 / 10										
					SOFT	DK	CLAYEY SILTSTONE	V.BR					
	80					GREY	LAM. TO V.F BEDDING						
							FISSIL						
S-9													
	85	0%											
					MED	GREY	SILTY SANDSTONE	BR					
					SOFT		LAM. THIN BEDDED						
							ALT. GREY & DK. GREY						
					MED SOFT	GREY	SAND STONE	BR					
	90						LAM TO						
							THIN BEDS						
							ALT. GREY +						
S-10		30%			MED HARD		BLK LAM.	BI					
							OCC. IRREGULAR						
	95						LAM. VUGS						
							LOX FRACS (RARE)						
					SOFT	BLK	COAL	V.BR					
			10 / 10				BRITTLE						
	100												

* When rock coring, enter rock brokeness.

** Include monitor reading in 6 foot intervals @ borehole. Increase reading frequency if elevated reponse read.

Drilling Area Background (ppm): —

Remarks: STEADY RAIN NO PID READINGS
SCREEN 86-96
SAND 83-98 BENTONITE 5" - 83'

Converted to Well: Yes ✓ No _____ Well I.D. #: 16 MWT 11

WELL NO.: 16MWT12

Tetra Tech NUS, Inc.

BEDROCK MONITORING WELL SHEET WELL INSTALLED IN BEDROCK

PROJECT CRANE	LOCATION CRANE IN	DRILLER J. WALSH
PROJECT NO. 9060	BORING 16MWT12	DRILLING METHOD HSA
DATE BEGUN 11-7-03	DATE COMPLETED 11-7-03	
FIELD GEOLOGIST M.G. COCHRAN		DEVELOPMENT METHOD BAILER/ SURGE/PUMP
GROUND ELEVATION 753.23	DATUM NAVD 88	

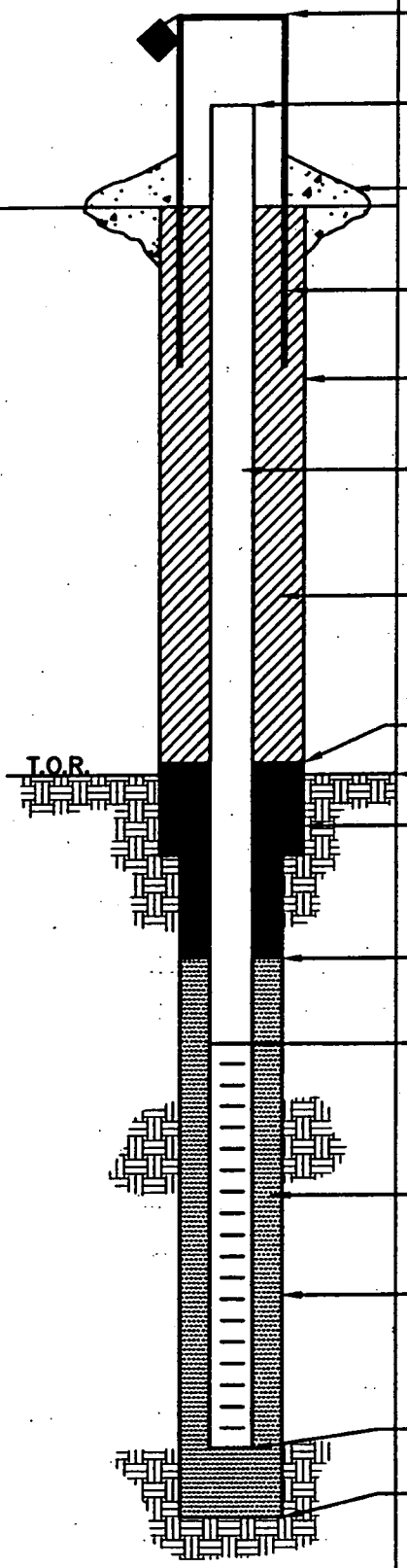

ELEVATION/HEIGHT OF TOP OF SURFACE CASING: 755.54 2.3

ELEVATION/HEIGHT TOP OF RISER: 755.45 2.2

TYPE OF SURFACE SEAL: CONCRETE

I.D. OF SURFACE CASING: 4"x4" SQ STEEL

DIAMETER OF HOLE: 8 1/2"

RISER PIPE I.D.: 2"

TYPE OF RISER PIPE: PVC SCHEDULE 40

TYPE OF BACKFILL: CETCO PURE GOLD MEDIUM CHIPS

ELEVATION/DEPTH TOP OF SEAL: 750.23 3

ELEVATION/DEPTH TOP OF BEDROCK: 745.23 / 8'

TYPE OF SEAL: CETCO PURE GOLD MEDIUM CHIPS

ELEVATION/DEPTH TOP OF SAND: 739.23 / 14

ELEVATION/DEPTH TOP OF SCREEN: 737.23 / 16

TYPE OF SCREEN: PVC SLOTTED

SLOT SIZE x LENGTH: .020 X 10'

I.D. SCREEN: 2"

TYPE OF SAND PACK: QTZ SAND 10/30

DIAMETER OF HOLE IN BEDROCK: 8 1/2"

CORE/REAM:

ELEVATION/DEPTH BOTTOM SCREEN: 727.23 / 26

ELEVATION/DEPTH BOTTOM OF SAND: 726.73 / 26.5

ELEVATION/DEPTH BOTTOM OF HOLE: 726.73 / 26.5

BACKFILL MATERIAL BELOW SAND: NA

ACAD:FORM_MWINBR.dwg 07/20/99 INL

Tetra Tech NUS, Inc.

BORING LOG

PROJECT NAME: Crane NSWC
PROJECT NUMBER: 9060
DRILLING COMPANY: BOWSER-MORNER
DRILLING RIG: CME 550

BORING No.: 16MWT12
DATE: 11-7-03
GEOLOGIST: M. G. COCHRAN
DRILLER: J. WALSH

Sample No. and Type or RQD	Depth (Ft.) or Run No.	Blows / 6" or RQD (%)	Sample Recovery / Sample Length	Lithology Change (Depth/Ft.) or Screened Interval	MATERIAL DESCRIPTION: Soil Density/ Consistency or Rock Hardness	Color	Material Classification	USCS*	Remarks	PID/FID Reading (ppm): Sample	Sampler BZ	Borehole**	Driller BZ**
	0												
S1		3/7	1.4/		M. DENSE	DK BR	CLAYEY SILT		DAMP, FILL-8'	.5	.5	.5	.5
	2	6/6	2.0			LT BRN	CLAYEY SILT						
S2		6/8	1.7/		M. DENSE	LT BRN	CLAYEY SILT			.5	.5	.5	.5
	4	10/12	2.0										
S3		5/11	1.7/		M. DENSE	GR BRN	CLAYEY SILT		V. F. LAMS W GREY-BR STREAK	.5	.5	.5	.5
	6	15/24	2.0										
S4		17/28	1.2/		V. DENSE	RD BRN	CLAYEY SILT			.5	.5	.5	.5
	8	50	2.0	8.0					BL. VF LAMS AT BTM. POSS. CON				
S5		28/50/.3	.4/		SOFT	PINK GREY	SHALE			.5	.5	.5	.5
	10		.8										
S5		50/5"	.4/			PINK GREY	SHALE		WEATHERED	.5	.6	.6	.6
	12												
S6		50/3"	.3/			DK GREY	SHALE		WEATHERED	.7	.7	.7	.7
	14		.8										
S7		50/4"	.3/			DK GREY	SHALE		WEATHERED	.7	.7	.7	.7
	16		.3										
S8		50/.5"	.4/			DK GREY	SHALE		V.F. LAMS W LT GREY STREAKS	.6	.6	.6	.6
	18		.3										
S9		50/5"	.3/			DK GR	SHALE		VF LAMS W LT GREY STREAKS	.6	.6	.6	.6
	20		.3										
S10		50/5"	.5/			DK GR	SHALE			.6	.6	.6	.6
	22		.5										
S11		50/5"	.5/			DK GREY	SHALE			.6	.6	.6	.6
	24		.5										
S12			.5/			DK GREY	SHALE			.6	.6	.6	.6

* When rock coring, enter rock brokeness.

** Include monitor reading in 6-foot intervals @ borehole. Increase reading frequency if elevated reponse read.

Drilling Area Background (ppm): .5

Remarks:

Converted to Well: Yes ✓ No ____ Well I.D. #: 16MWT12

Tetra Tech NUS, Inc.

BORING LOG

PROJECT NAME: Crane NSWC
PROJECT NUMBER: 9060
DRILLING COMPANY: BOWSER-MORNER
DRILLING RIG: CME 550

BORING No.: 16MWT12
DATE: 11-7-03
GEOLOGIST: M.G. COCHRAN
DRILLER: J. WALSH

Sample No. and Type or RQD	Depth (Ft.) or Run No.	Blows / 6" or RQD (%)	Sample Recovery / Sample Length	Lithology Change (Depth/Ft.) or Screened Interval	MATERIAL DESCRIPTION: Soil Density/ Consistency or Rock Hardness	Color	Material Classification	USCS*	Remarks	PID/FID Reading (ppm): Sample	Sampler BZ	Borehole**	Driller BZ**
	26		.5			DK GREY	SHALE						
		50/5	.91							.5	.5	.5	.5
	28		.6			BL	COAL						
							TD 28.0						

* When rock coring, enter rock brokeness.

** Include monitor reading in 6 foot intervals @ borehole. Increase reading frequency if elevated reponse read.

Drilling Area Background (ppm): .5

Remarks: AUGURED TO 26.5'

Converted to Well: Yes ✓ No ____ Well I.D. #: 16MWT12

WELL NO.: 16MWT13

Tetra Tech NUS, Inc.

BEDROCK MONITORING WELL SHEET WELL INSTALLED IN BEDROCK

PROJECT NWSC CRANE	LOCATION CRANE, IN	DRILLER BOWSER-MORNER	
PROJECT NO. 9060	BORING 16MWT13	DRILLING METHOD HSA	
DATE BEGUN 11-11-03	DATE COMPLETED 11-11-03		
FIELD GEOLOGIST M.G COCHRAN		DEVELOPMENT METHOD BAILER/SURGE	
GROUND ELEVATION 757.62	DATUM NAVD 88		

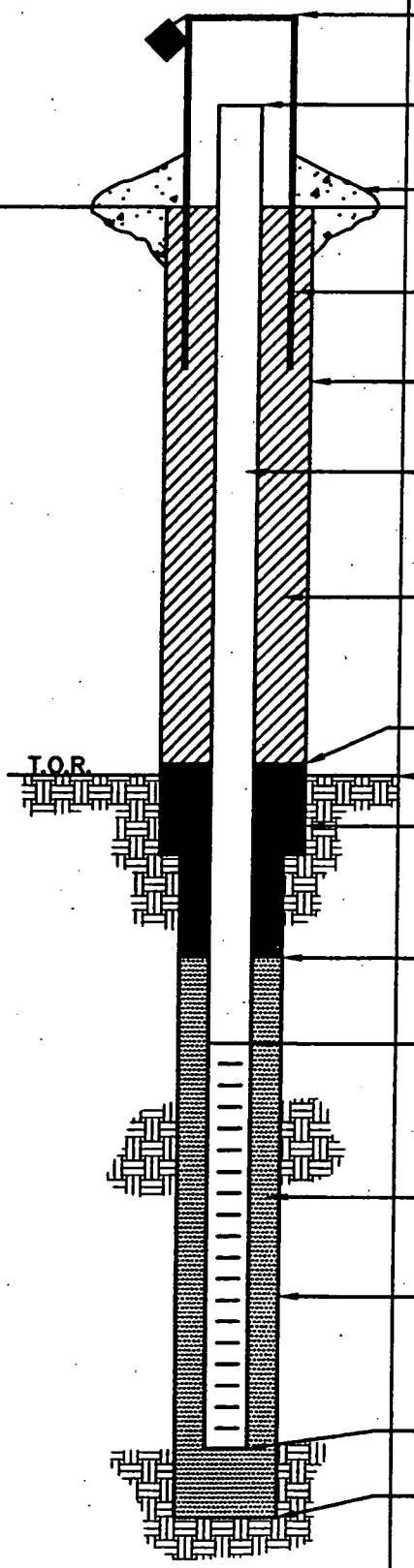

ELEVATION/HEIGHT OF TOP OF SURFACE CASING: 759.66/2.1

ELEVATION/HEIGHT TOP OF RISER: 759.57/2.0

TYPE OF SURFACE SEAL: CONCRETE

I.D. OF SURFACE CASING: 4" x 4" SQ STEEL

DIAMETER OF HOLE: 8 1/2"

RISER PIPE I.D.: 2"
TYPE OF RISER PIPE: PVC

TYPE OF BACKFILL: CETCO PURE GOLD MEDIUM CHIPS

ELEVATION/DEPTH TOP OF SEAL: 759.62/3'

ELEVATION/DEPTH TOP OF BEDROCK: 747.62/10

TYPE OF SEAL: CETCO PURE GOLD MEDIUM CHIPS

ELEVATION/DEPTH TOP OF SAND: 751.62/6

ELEVATION/DEPTH TOP OF SCREEN: 749.62/8
TYPE OF SCREEN: PVC SLOTTED
SLOT SIZE x LENGTH: .020 X 10'
I.D. SCREEN: 2"

TYPE OF SAND PACK: GLOBAL MEDIUM SAND

DIAMETER OF HOLE IN BEDROCK: 8 1/2"
CORE/REAM:

ELEVATION/DEPTH BOTTOM SCREEN: 739.62/18
ELEVATION/DEPTH BOTTOM OF SAND: 738.62/19
ELEVATION/DEPTH BOTTOM OF HOLE: 738.62/19
BACKFILL MATERIAL BELOW SAND: NA

ACAD: FORM_MWINBR.dwg 07/29/99 INL

Tetra Tech NUS, Inc.

BORING LOG

PROJECT NAME: Crane NSWC
PROJECT NUMBER: 90060
DRILLING COMPANY: BOWSER-MORNER
DRILLING RIG: CME 550

BORING No.: 16MWT13
DATE: 11-11-03
GEOLOGIST: M. G. COCHRAN
DRILLER: J. WALSH

Sample No. and Type or RQD	Depth (Ft.) or Run No.	Blows / 6" or RQD (%)	Sample Recovery / Sample Length	Lithology Change (Depth/Ft.) or Screened Interval	MATERIAL DESCRIPTION: Soil Density/ Consistency or Rock Hardness	Color	Material Classification	USCS*	Remarks	PID/FID Reading (ppm): Sample	Sampler BZ	Borehole**	Driller BZ**
						BRN	SANDY SILT	SM					
	3												
S1	4	2/3	1.2/		LOOSE	BRN	SANDY SILT	SM	DAMP, FILL	1.5	1.5	1.5	1.5
	5	2/2	2.0										
	8												
S2		3/10	.9/		V DENSE	GR BRN	SANDY SILT		DAMP.	-	-	-	-
	10	27/50/5"	2.0	10.0					GRADING INTO SILTSTONE @ BTM				
	13												
S3		50/5"	.4/			LT GREY	SHALY SILTSTONE		V.F. LAMS, DRY STREAKED WHITE	-	-	-	-
	15		.4										
							TD 18'						

* When rock coring, enter rock brokeness.

** Include monitor reading in 6 foot intervals @ borehole. Increase reading frequency if elevated reponse read.

Drilling Area Background (ppm): 1.5

Remarks: - INSTRUMENT DOWN, WILL NOT START BACK UP

Converted to Well: Yes ✓ No _____ Well I.D. #: 16MWT13

WELL NO.: 16MWT14

Tetra Tech NUS, Inc.

BEDROCK MONITORING WELL SHEET WELL INSTALLED IN BEDROCK

PROJECT NWSC CRANE	LOCATION CRANE, IN	DRILLER J. WALSH
PROJECT NO. 9060	BORING 16MWT14	DRILLING METHOD HSA
DATE BEGUN 11-7-03	DATE COMPLETED 11-7-03	
FIELD GEOLOGIST M.G. COCHRAN	DATE ABANDONED: 11-27-03	DEVELOPMENT METHOD NA
GROUND ELEVATION ~764.9	DATUM NAVD 88	

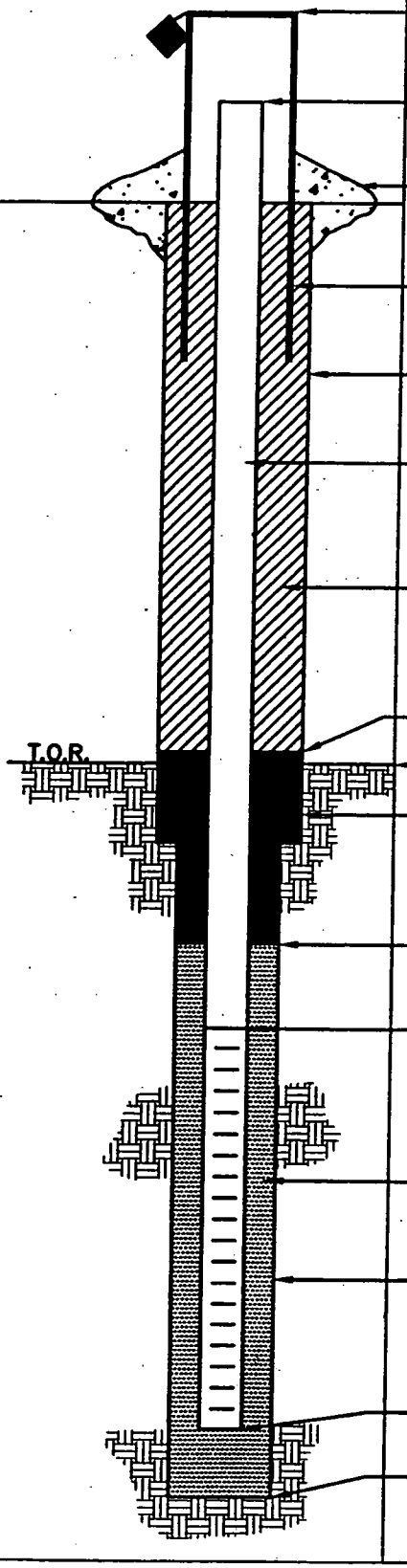

ELEVATION/HEIGHT OF TOP OF SURFACE CASING: —/—
FLUSH MOUNT
*Abandoned

ELEVATION/HEIGHT TOP OF RISER: —/—

TYPE OF SURFACE SEAL: NONE - ABANDONED

I.D. OF SURFACE CASING: NONE - ABANDONED

DIAMETER OF HOLE: 8 1/2"

RISER PIPE I.D.: 2"
TYPE OF RISER PIPE: PVC SCHEDULE 40 - REMOVED 11-27-03

TYPE OF BACKFILL: CETCO PURE GOLD MEDIUM CHIPS

ELEVATION/DEPTH TOP OF SEAL: 13

ELEVATION/DEPTH TOP OF BEDROCK: 7'

TYPE OF SEAL: CETCO PURE GOLD MEDIUM CHIPS

ELEVATION/DEPTH TOP OF SAND: 13

ELEVATION/DEPTH TOP OF SCREEN: 15
TYPE OF SCREEN: PVC - REMOVED 11-27-03
SLOT SIZE x LENGTH: .020 X 10'
I.D. SCREEN: 2"

TYPE OF SAND PACK: BEST MEDIUM SAND

DIAMETER OF HOLE IN BEDROCK: 8 1/2"
CORE/REAM:

ELEVATION/DEPTH BOTTOM SCREEN: 25
ELEVATION/DEPTH BOTTOM OF SAND: 25
ELEVATION/DEPTH BOTTOM OF HOLE: 28
BACKFILL MATERIAL BELOW SAND: NA

ACAD:FORM_MWINBR.dwg 07/20/99 INL

Tetra Tech NUS, Inc.

BORING LOG

PROJECT NAME: Crane NSWC
PROJECT NUMBER: 9060
DRILLING COMPANY: BOWSER MORNER
DRILLING RIG: CME 550 ATV

BORING No.: 16MWT14
DATE: 11-7-03
GEOLOGIST: M. G. COCHRAN
DRILLER: J WALSH

Sample No. and Type or RQD	Depth (Ft.) or Run No.	Blows / 6" or RQD (%)	Sample Recovery / Sample Length	Lithology Change (Depth/Ft.) or Screened Interval	Soil Density/ Consistency or Rock Hardness	Color	Material Classification	USCS*	Remarks	PID/FID Reading (ppm) Sample	Sampler BZ	Borehole**	Driller BZ**
	0					BL GR	ASPHALT GRAVEL BASE		ODORS, ASPHALT BURNING FROM BIT				
	1												
S1		10/18	1.1/		V. DENSE	CR BRN	SAND + GRAVEL	SP	FILL, DAMP FILL TO 4'	.3	.3	1.1	.3
	3	50/3"	1.3						SS. FRAG IN BTM				
				4.0					AUGURED THRU FRAG, LOOKS				
	5								NTL BELOW				
S2		10/10	.8/		V. DENSE	LT GREY	CLAYEY SILT	SM	DAMP. V. F. LAMINATED,	.3	.3	.3	.3
	7	15/50/1"	1.6'	7.0					HARD DRILLING POSSIBLE ROCK				
S3		50/5"	.4/		SOFT	GR BRN	SHALE, WEATHERED		DAMP. V FINE LAM.	.3	.3	.3	.3
	9		.5										
S4		32/44	1.5/		SOFT	GREY	SHALE WEATHERED		V. FINE LAM. DAMP	.3	.3	.3	.3
	11	48/50	2.0			RD BRN	SHALE, WEATHERED		FE STAINED ON LAMS.				
	13												
S5		16/22	1.3/		SOFT	DRGR BL	SHALE		V.F. LAM, FE STAINS ON LAMS WEATHERED.	.3	.3	.3	.3
	15	50/5"	1.5										
S6		11/15	1.4/			DRGR BL	SHALE, WEATHERED		V.F. LAM. FE STAINS ON LAMS	.3	.3	.3	.3
	17	20/50/5	2.0	16.5 / 17		BL	COAL		LT. GREY SHALE FRAG IN BTM				
S7		24/50/5	.2/			LT GR	SHALE		BLACK, LAMS, V.F. IN SHALE DAMP	.3	.3	.3	.3
	19		1.0										
S8		50/5"	.6/			LT GR	SHALE		WEATHERED	.3	.3	.3	.3
	21		.6										
S9		50/8"	.4/			BRN GREY	SHALE,		V.F. LAMS. FE STAINED LAMS WEATHERED	.3	.3	.3	.3
	23		.6										
S10		50/6"	.6/			RD BRN	SHALE		FE STAINED	.3	.3	.3	.3
	25		.6				TD 25.0						

* When rock coring, enter rock brokeness.

** Include monitor reading in 6 foot intervals @ borehole. Increase reading frequency if elevated reponse read.

Drilling Area Background (ppm): .3

Remarks: 4 1/4 ID, 8 1/2 OD HSA - WELL DRY ON 11-27-03, WELL ABANDONED ON 11-27-03 BY KNOCKING OFF TOP OF SCREEN OUT, FILLING W/CEMENT/BENT. GROUT, PULLING PVC, CEMENT TO

Converted to Well: Yes ✓ No ____ Well I.D. #: 16MWT14

ABANDONED ON 11-27-03

WELL NO.: 16MWT15

Tetra Tech NUS, Inc.

BEDROCK MONITORING WELL SHEET WELL INSTALLED IN BEDROCK

PROJECT CRANE NSWC	LOCATION SWMU 16	DRILLER JON KEIFER
PROJECT NO. 9060	BORING 16MWT15	DRILLING METHOD ROTO SONIC
DATE BEGUN 11-7-03	DATE COMPLETED 11-9-03	DEVELOPMENT METHOD BAILER/WATERA
FIELD GEOLOGIST FRED W. RAMSER		
GROUND ELEVATION 757.73	DATUM NAVD 88	

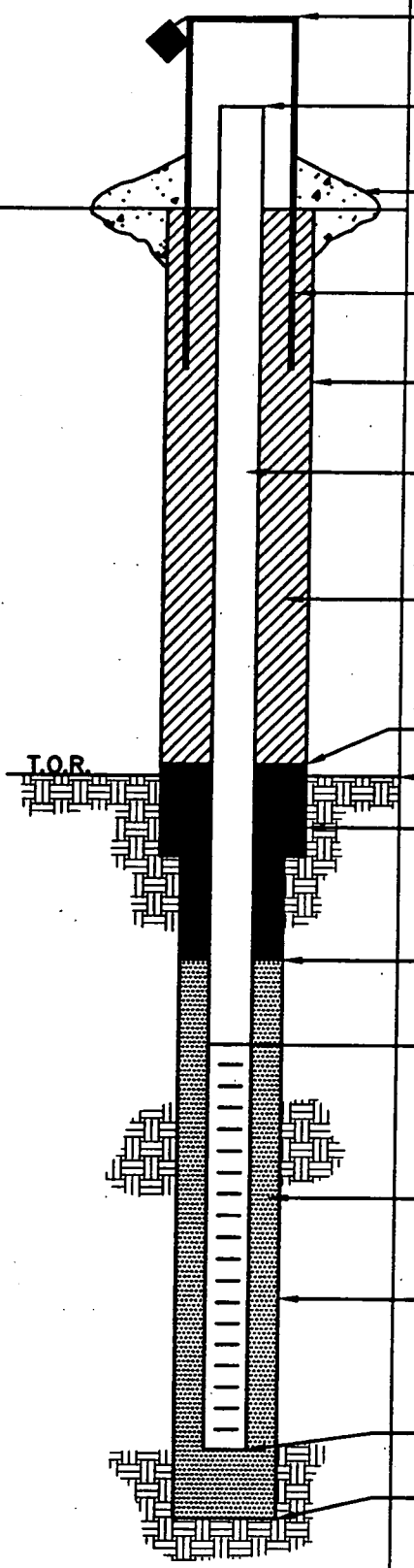

ELEVATION/HEIGHT OF TOP OF SURFACE CASING: 759.77 / 2.1

ELEVATION/HEIGHT TOP OF RISER: 759.69 / 2.0

TYPE OF SURFACE SEAL: CONCRETE 4' x 4' x 6"

I.D. OF SURFACE CASING: 4" x 4" SQ

DIAMETER OF HOLE: 11"

RISER PIPE I.D.: 2"

TYPE OF RISER PIPE: SCH. 40 PVC

TYPE OF BACKFILL: BENTONITE "PURE GOLD" CHIPS CETCO. 6" ISOLATION CASING INSTALLED USEING CEMENT/BENTONITE GROUT TO 38.5' BGS

ELEVATION/DEPTH TOP OF SEAL: 752.73 / 5'

ELEVATION/DEPTH TOP OF BEDROCK: 750.23 / 7.5'

TYPE OF SEAL: BENTONITE "PURE GOLD" CHIPS CETCO

ELEVATION/DEPTH TOP OF SAND: 679.73 / 78'

ELEVATION/DEPTH TOP OF SCREEN: 676.73 / 81'

TYPE OF SCREEN: PVC SCH. 40

SLOT SIZE x LENGTH: 0.02 x 10'

I.D. SCREEN: 2"

TYPE OF SAND PACK: QTZ SAND 10/30 SEP / 180

DIAMETER OF HOLE IN BEDROCK: 5"

CORE/REAM: CORE

ELEVATION/DEPTH BOTTOM SCREEN: 666.73 / 91

ELEVATION/DEPTH BOTTOM OF SAND: 665.73 / 92'

ELEVATION/DEPTH BOTTOM OF HOLE: 665.73 / 92'

BACKFILL MATERIAL BELOW SAND: NONE

ACAD: FORM_MWINBR.dwg 07/20/99 INL

Tetra Tech NUS, Inc.

BORING LOG

PROJECT NAME: Crane NSWC
PROJECT NUMBER: 9060
DRILLING COMPANY: BOWSER MORNER
DRILLING RIG: VERSA SONIC

BORING No.: 16MWT15
DATE: 11-7-03
GEOLOGIST: FRED W RAMSER
DRILLER: DENNIS SINKS

Sample No. and Type or RQD	Depth (Ft.) or Run No.	Blows / 6" or RQD (%)	Sample Recovery / Sample Length	Lithology Change (Depth/Ft.) or Screened Interval	Soil Density/ Consistency or Rock Hardness	Color	Material Classification	USCS*	Remarks	PID/FID Reading (ppm) Sample	Sampler BZ	Borehole**	Driller BZ**
						LT GREY	CLAYEY F-g SAND	SM/SC					
						OLIVE GREY	TR GRAVEL						
									POSSIBLE FILL MATL.	8			
	5												
						YEL BRN	SILT + F-g SAND w/						
							ROCK FRAG. (SANDSTONE)		LOOKS LIKE REWORKED MATL.				
						YEL BRN	SAND STONE		ON TOP OF ROCK				0
				TOP OF RK 25'	SOFT		WEATHERED						
	10					GREY BLK	SANDSTONE	V.BR	ALT.	12			
						YEL BRN	V. THIN BEDDED TO LAM. FE. STAIN		GRADES TO SILTSTONE ~10'				
S-1		10%				DK GREY LT. GREY							0
	15				VERY SOFT		CLAY w/ROCK FRAGS	BR	ANGULAR GRA. OF SS + SILTSTONE				
					VERY SOFT		MUD STONE w OCC ROCK FRAGS OF SILTSTONE		STRONGLY WEATHERED	14			
			7.0/10										
	20				SOFT	DK GREY	CLAYEY SILTSTONE -LAMS	V.BR					0
S-2		10%											
					VERY SOFT	DK GREY	MUDSTONE		STRONGLY WEATHERED				
						DK GREY	SILTSTONE	V.BR					0
	25												

* When rock coring, enter rock brokeness.
** Include monitor reading in 6 foot intervals @ borehole. Increase reading frequency if elevated reponse read.

Drilling Area Background (ppm): —

Remarks: INSTALLED 6" CASING TO 38.5' BGS USING 8" DRILL PIPE ~11" OD.

Converted to Well: Yes ✓ No _____ Well I.D. #: 16MWT15

Tetra Tech NUS, Inc.

BORING LOG

PROJECT NAME: Crane NSWC
PROJECT NUMBER: 9060
DRILLING COMPANY: BOWSER MORNER
DRILLING RIG: VERSA SONIC

BORING No.: 16MWT15
DATE: 11-7-03
GEOLOGIST: FRED W RAMSER
DRILLER: DENNIS SINKS

Sample No. and Type or RQD	Depth (Ft.) or Run No.	Blows / 6" or RQD (%)	Sample Recovery / Sample Length	Lithology Change (Depth/Ft.) or Screened Interval	MATERIAL DESCRIPTION: Soil Density/ Consistency or Rock Hardness	Color	Material Classification	USCS*	Remarks	PID/FID Reading (ppm): Sample	Sampler BZ	Borehole**	Driller BZ**
					SOFT	DK GREY	SILTSTONE	V.BR		10			
							V. THIN BEDS TO LAM.						
	28		7/10										0
							COAL						
	30				MED	GREY	SAND STONE	BR		8			
					SOFT	LT GREY	LT. GREY IRREGULAR LAM.		BIOTURB.?				0
S-3		15%					LO ∆ FRAC						
	35						CROSS LAM.			4			
							OCC. VUGS						
							PLANT FOSSILS						
			8/10										
	40												
					SOFT	DK GREY	SANDY SILTSTONE	V.Br					
							ALT DK GREY LT GREY LAM.			2			
							V. THIN BEDDING						
S-4		30%			SOFT	MED GREY	MUDSTONE	BL					0
	45												
			7/7							4			
						DK GREY	SILTSTONE	V.Br					
							LAM. TO V. THIN BEDDED						0
	50												

* When rock coring, enter rock brokeness.

** Include monitor reading in 6 foot intervals @ borehole. Increase reading frequency if elevated reponse read.

Drilling Area Background (ppm): —

Remarks: INSTALLED 6" ISO. CASING TO 38.5' BGS
USING 9" PIPE W/ 11" OUTSIDE DIA.
INSTALLED PVC 2" WELL USEING 9" CORE PIPE 54 OD.

Converted to Well: Yes ✓ No _____ Well I.D. #: 16MWT15

Tetra Tech NUS, Inc.

BORING LOG

PROJECT NAME: Crane NSWC
PROJECT NUMBER: 9060
DRILLING COMPANY: BOWSER MORNER
DRILLING RIG: VERSA SONIC

BORING No.: 16MWT15
DATE: 11-9-03
GEOLOGIST: FRED W. RAMSER
DRILLER: JON KEIFER

Sample No. and Type or RQD	Depth (Ft.) or Run No.	Blows / 6" or RQD (%)	Sample Recovery / Sample Length	Lithology Change (Depth/Ft.) or Screened Interval	MATERIAL DESCRIPTION: Soil Density/ Consistency or Rock Hardness	Color	Material Classification	USCS *	Remarks	PID/FID Reading (ppm): Sample	Sampler BZ	Borehole**	Driller BZ**
1					SOFT	DK	GRADING TO A	VBr					
S-5		10%				GRY TO BLK	CLAYEY SILTSTONE			14			
							TO 53'						
						DK GRY	SILTSTONE	V.Br					0
	55						LAM.						
			9/10										
					SOFT	DK	CLAYEY SILTSTONE	V.Br		16			
						GREY	LAM TO V.F						
	60						BEDDING						0
S-6							FISSIL						
		5%								8			
	65						MUDSTONE	Br					0
			9/10										
					SOFT	DK	CLAYEY SILTSTONE	V.Br		8			
						GREY	LAM.						
	70						FISSIL						
S-7													
		10%								12			
													0
	75												

* When rock coring, enter rock brokeness.

** Include monitor reading in 6 foot intervals @ borehole. Increase reading frequency if elevated reponse read.

Drilling Area Background (ppm): –

Remarks:

Converted to Well: Yes ✓ No _____ Well I.D. #: 16MWT15

Tetra Tech NUS, Inc.

BORING LOG

PROJECT NAME: Crane NSWC
PROJECT NUMBER: 9060
DRILLING COMPANY: BOWSER MORNER
DRILLING RIG: VERSA SONIC

BORING No.: 16MWT 15
DATE: 11-9-03
GEOLOGIST: FRED W HAMSER
DRILLER: JON KEIFFER

Sample No. and Type or RQD	Depth (Ft.) or Run No.	Blows / 6" or RQD (%)	Sample Recovery / Sample Length	Lithology Change (Depth/Ft.) or Screened Interval	Soil Density/ Consistency or Rock Hardness	Color	Material Classification	USCS *	Remarks	PID/FID Reading (ppm) Sample	Sampler BZ	Borehole**	Driller BZ**
							CLAYEY SILTSTONE (MUDSTONE	BL					
	77		10 / 10							21			
						DK GREY	CLAYEY SILTSTONE LAM.	V.BR					0
	80												
						GREY							
S-8		5%			MED SOFT		SANDY SILTSTONE V.F BEDDING (Fg SAND)	V.BR		4.2			
	86												0
			10			DK GREY	SILTSTONE	BR					
										5.6			
S-9	90	40%			MED HARD	MED GREY	SANDSTONE IRREGULAR LAM.	BL					
				TD									
	95												
							SCREEN 81'-91' SAND 78'-92'						

* When rock coring, enter rock brokeness.

** Include monitor reading in 6 foot intervals @ borehole. Increase reading frequency if elevated reponse read.

Remarks:

Drilling Area Background (ppm): —

Converted to Well: Yes ✓ No ____ Well I.D. #: 16MWT15

TTN
1111

WELL NO.: 16MWT16

Tetra Tech NUS, Inc.

BEDROCK MONITORING WELL SHEET WELL INSTALLED IN BEDROCK

PROJECT	CRANE	LOCATION	CRANE IN	DRILLER	BOWSER-MORNER
PROJECT NO.	90600	BORING	16MWT16	DRILLING METHOD	HSA/AR
DATE BEGUN	11-9-03	DATE COMPLETED	11-9-03		
FIELD GEOLOGIST	M.G. COCHRAN			DEVELOPMENT METHOD	BAILER/LUNTTERA
GROUND ELEVATION	764.98	DATUM	NAVD 88		

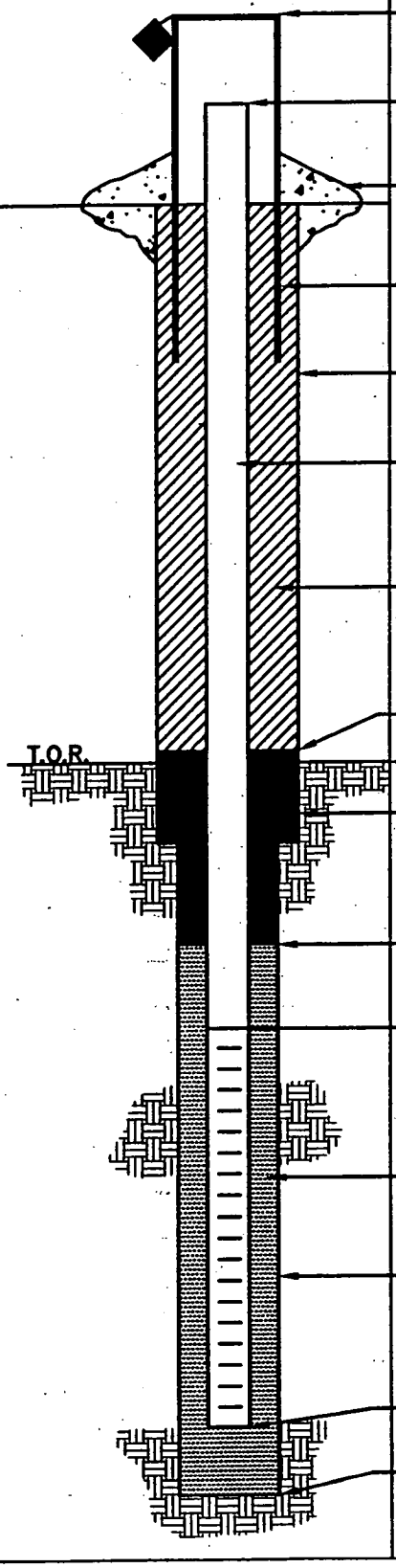

ELEVATION/HEIGHT OF TOP OF SURFACE CASING: NA / NA
FLUSH MOUNT

ELEVATION/HEIGHT TOP OF RISER: 764.74 (0.24)

TYPE OF SURFACE SEAL: CONCRETE

I.D. OF SURFACE CASING: 12" DIA WELL COVER

DIAMETER OF HOLE: 8 1/2" TO 15', 4" TO TD.

RISER PIPE I.D.: 2"
TYPE OF RISER PIPE: PVC

TYPE OF BACKFILL: PURE GOLD MEDIUM BENTONITE CHIPS

ELEVATION/DEPTH TOP OF SEAL: 761.98 / 3'

ELEVATION/DEPTH TOP OF BEDROCK: 757.98 / 7'

TYPE OF SEAL: PURE GOLD MEDIUM BENTONITE CHIPS

ELEVATION/DEPTH TOP OF SAND: 741.98 / 23

ELEVATION/DEPTH TOP OF SCREEN: 738.98 / 26
TYPE OF SCREEN: PVC SLOTTED
SLOT SIZE x LENGTH: .020 X 10'
I.D. SCREEN: 2 INCHES

TYPE OF SAND PACK: GLOBAL MEDIUM SAND

DIAMETER OF HOLE IN BEDROCK: 4"
CORE/REAM:

ELEVATION/DEPTH BOTTOM SCREEN: 728.98 / 36
ELEVATION/DEPTH BOTTOM OF SAND: / 36
ELEVATION/DEPTH BOTTOM OF HOLE: 724.98 / 40
BACKFILL MATERIAL BELOW SAND: PURE GOLD BENTONITE CHIPS

ACAD:FORM_MWINBR.dwg 07/20/99 INL

Tetra Tech NUS, Inc.

BORING LOG

PROJECT NAME: Crane NSWC
PROJECT NUMBER: 9060
DRILLING COMPANY: BOWSER-MORNER
DRILLING RIG: CME 550 ATV

BORING No.: 16MWT16
DATE: 11-9-03
GEOLOGIST: M. G. COCHRAN
DRILLER: J. WALSH

Sample No. and Type or RQD	Depth (Ft.) or Run No.	Blows / 6" or RQD (%)	Sample Recovery / Sample Length	Lithology Change (Depth/Ft.) or Screened Interval	Soil Density/ Consistency or Rock Hardness	Color	Material Classification	USCS*	Remarks	PID/FID Reading (ppm) Sample	Sampler BZ	Borehole**	Driller BZ**
0	0						SEE LOG		PET. ODOR - ASPHALT?	-	-	0	0
							16MWT14 FOR						
							MATERIAL						
							DESCRIPTION TO						
	5						15'						
	10												
	15												
					SOFT	LT GR	SILTSTONE		DRY, BROKEN	0	0	0	0
									FE STAINED FRACS @ 18.1				
									& 25'				
C1			6.0/										
5.1/		51%	10.0										
10.0													
				24									
	25				M HARD	RD BRN	SANDSTONE		GRADATIONAL CHANGE				

* When rock coring, enter rock brokeness.

** Include monitor reading in 6 foot intervals @ borehole. Increase reading frequency if elevated reponse read.

Drilling Area Background (ppm): 0

Remarks: 8 1/2 OD 4 1/4 ID HSA TO 15', A.R. CORE TO T.D (NX), HOLE DRY @ 25' AFTER 1 HOUR
MAT

Converted to Well: Yes ✓ No _____ Well I.D. #: 16MWT16

Tetra Tech NUS, Inc.

BORING LOG

PROJECT NAME: Crane NSWC
PROJECT NUMBER: 9060
DRILLING COMPANY: BOWSER-MORNER
DRILLING RIG: CME 550

BORING No.: 16MWT16
DATE: 11-9-03
GEOLOGIST: M. G. COCHRAN
DRILLER:

Sample No. and Type or RQD	Depth (Ft.) or Run No.	Blows / 6" or RQD (%)	Sample Recovery / Sample Length	Lithology Change (Depth/Ft.) or Screened Interval	Soil Density/ Consistency or Rock Hardness	Color	Material Classification	USCS *	Remarks	PID/FID Reading (ppm) Sample	Sampler BZ	Borehole**	Driller BZ**
	25												
					M HARD	LT GREY	SANDSTONE		V. BROKEN, FRACTS.	0	0	0	0
									FE STAINED ON FRACS				
C2			5.6/										
10.0/		10%	10.0										
10													
									SATURATED @ 32' HIGH 9				
									FRACS @ 32' RED STAINING ON FRACS @ 30				
	35			35									
					M HARD	LT GREY	SHALY SILTSTONE		DRY, BROKEN				
C3										0	0	0	0
3.8/		38%	5.0/				SILTSTONE		NOT SHALY LIKE ABOVE				
5.0			5.0	39									
	40		39.2			DK GR	SHALE		COAL @ 39-39.2' MORE MASSIVE THAN ABOVE				
							TD 40'						

* When rock coring, enter rock brokeness.

** Include monitor reading in 6 foot intervals @ borehole. Increase reading frequency if elevated reponse read.

Drilling Area Background (ppm): 0

Remarks:

Converted to Well: Yes ✓ No _____ Well I.D. #: 16MWT16

WELL NO.: 16MWT17

Tetra Tech NUS, Inc.

BEDROCK MONITORING WELL SHEET WELL INSTALLED IN BEDROCK

PROJECT: CRANE	LOCATION: CRANE IN	DRILLER: BOWSER-MORNER
PROJECT NO.: 9060	BORING: 16MWT17	DRILLING METHOD: HSA
DATE BEGUN: 11-8-03	DATE COMPLETED: 11-8-03	
FIELD GEOLOGIST: M.G. COCHRAN		DEVELOPMENT METHOD: BAILER/SURGE
GROUND ELEVATION: 764.79	DATUM: NAVD 88	

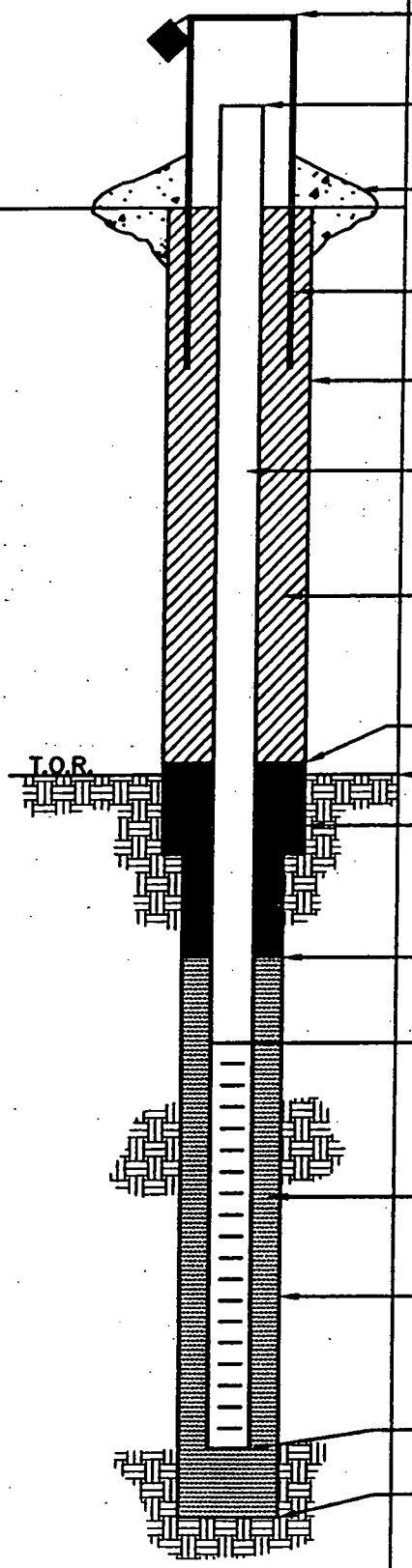

ELEVATION/HEIGHT OF TOP OF SURFACE CASING: 766.54/1.7

ELEVATION/HEIGHT TOP OF RISER: 766.53/1.7

TYPE OF SURFACE SEAL: CONCRETE

I.D. OF SURFACE CASING: 4" x 4" SQ. STEEL

DIAMETER OF HOLE: 8 1/2"

RISER PIPE I.D.: 2"

TYPE OF RISER PIPE: PVC SCHEDULE 40

TYPE OF BACKFILL: CETCO PURE GOLD MEDIUM PELLETS

ELEVATION/DEPTH TOP OF SEAL: 761.79/3

ELEVATION/DEPTH TOP OF BEDROCK: 755.79/9

TYPE OF SEAL: CETCO PURE GOLD MEDIUM PELLETS

ELEVATION/DEPTH TOP OF SAND: 752.79/12

ELEVATION/DEPTH TOP OF SCREEN: 750.79/14

TYPE OF SCREEN: PVC SLOTTED

SLOT SIZE x LENGTH: .020 X 10'

I.D. SCREEN: 2"

TYPE OF SAND PACK: GLOBAL MEDIUM SAND

DIAMETER OF HOLE IN BEDROCK: 8 1/2"

CORE/REAM:

ELEVATION/DEPTH BOTTOM SCREEN: 740.79/24

ELEVATION/DEPTH BOTTOM OF SAND: 740.79/24

ELEVATION/DEPTH BOTTOM OF HOLE: 740.79/24

BACKFILL MATERIAL BELOW SAND: —

ACAD:FORM_MWINBR.dwg 07/20/99 INL

Tetra Tech NUS, Inc.

BORING LOG

PROJECT NAME: Crane NSWC
PROJECT NUMBER: 9060
DRILLING COMPANY: BOWSER MORNER
DRILLING RIG: CME 550

BORING No.: 16MWT17
DATE: 11-8-03
GEOLOGIST: M.G. COCHRAN
DRILLER: J. WALSH

Sample No. and Type or RQD	Depth (Ft.) or Run No.	Blows / 6" or RQD (%)	Sample Recovery / Sample Length	Lithology Change (Depth/Ft.) or Screened Interval	Soil Density/ Consistency or Rock Hardness	Color	Material Classification	USCS*	Remarks	PID/FID Reading (ppm) Sample	Sampler BZ	Borehole**	Driller BZ**
	0												
S1		4/10	1.2/		MDENSE	GR	SAND + GRAVEL	SP	FILL, DAMP	0	0	0	0
	2	4/4	2.0						FILL TO				
S2		3/4	1.6/		LOOSE	DK BRN	CLAYEY SILT	SM	FILL, DAMP. SS FRAG + BRICK	0	0	0	0
	4	3/5	2.0						IN SPOON. GREY MOTTLING				
S3		2/2	.4/		V LOOSE	DK BR.	SILTY CLAY	SM	GREY MOTTLING, FILL	0	0	0	0
	6	2/2	2.0										
S4		2/5	.9/		LOOSE	DK BR	SILT.		RED-BR SS FRAG IN BTM	0	0	0	0
	8	18/27	2.0	8.0									
S5		11/15	.9/	9.0	V DENSE	GR	SILT		DAMP. LOOKS WET	0	0	0	0
	10	50/5"	1.4										
S6		50/5"	.3/		V[illegible]	RD BRN	SANDSTONE		FE STAINED	.6	0	.6	0
	12		.4										
S7		50/1"	.1/			RD BRN	SANDSTONE			.6	.6	.6	.0
	14		.1										
S8		50/1/2"	.1/			GR BR	SANDSTONE			1.3	1.3	1.3	1.3
	16		.2										
S9		11/15	.6/			GR	SANDSTONE		WEATHERED, SAT IN 1/MA ZONE.	3.8	1.3	1.3	1.3
	18	50/3"	1.3						BLACK STREAKS IN SPL				
S10		50/1.5	.3/			RD	SANDSTONE		SHALY, FE STAINING	.9	.9	.9	.9
	20		.5						SAT. ALONG SPOON				
S11		50/1.3	.2/			GR	SHALE		V.F LAMS IN WHITE DAMP	0	0	0	0
	22		.3										
S12		50/.3	.3/			GR	SHALE		V.F LAMS IN WHITE	0	0	0	0
	24		.3				TD 24'						

* When rock coring, enter rock brokeness.

** Include monitor reading in 6 foot intervals @ borehole. Increase reading frequency if elevated reponse read.

Drilling Area Background (ppm): —

Remarks: PID DRIFT IN MEAS.

Converted to Well: Yes ✓ No ____ Well I.D. #: 16MWT17

WELL NO.: 16MW110

Tetra Tech NUS, Inc.

BEDROCK MONITORING WELL SHEET WELL INSTALLED IN BEDROCK

PROJECT NSWC CRANE	LOCATION SWMU 16	DRILLER JOE McCLOUD
PROJECT NO.	BORING 16MWT18	DRILLING METHOD ROTO-SONIC
DATE BEGUN 1-16-04	DATE COMPLETED 1-18-04	DEVELOPMENT METHOD BAILER/WATERA
FIELD GEOLOGIST FRED W RAMSER		
GROUND ELEVATION 764.99	DATUM NAVD 88	

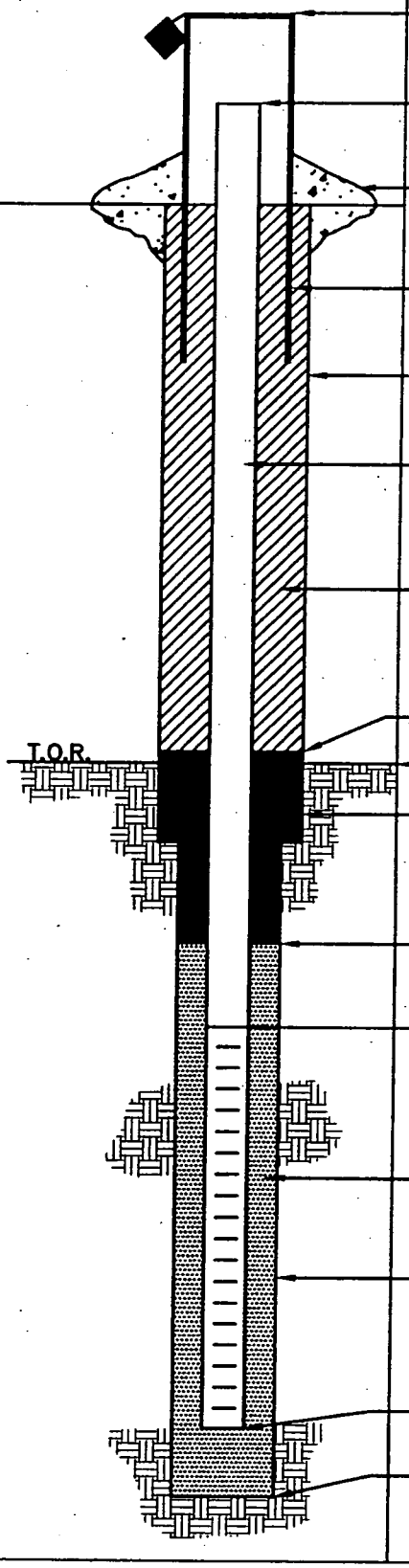

ELEVATION/HEIGHT OF TOP OF SURFACE CASING: NA / NA
FLUSH MT. COMPLETION

ELEVATION/HEIGHT TOP OF RISER: 764.44 (0.55)

TYPE OF SURFACE SEAL: CONCRETE

I.D. OF SURFACE CASING: 6"
(ISOLATION CASING TO 40' BGS)

DIAMETER OF HOLE: 11"

RISER PIPE I.D.: 2"
TYPE OF RISER PIPE: PVC SCH 40

TYPE OF BACKFILL: BENTONITE CHIPS
"PURE GOLD" GEL.
ISOLATION CASING GROUT BENT/CEMENT SLURRY

ELEVATION/DEPTH TOP OF SEAL: 762.79 / 2'

ELEVATION/DEPTH TOP OF BEDROCK: 756.79 / 8'

TYPE OF SEAL: BENTONITE CHIPS
"PURE GOLD" GEL

ELEVATION/DEPTH TOP OF SAND: 673.79 / 91

ELEVATION/DEPTH TOP OF SCREEN: 670.79 / 94
TYPE OF SCREEN: PVC SCH 40
SLOT SIZE x LENGTH: 0.020 x 10
I.D. SCREEN: 2"

TYPE OF SAND PACK: GLOBAL QTZ SAND
17E" 10/20 MED/COARSE SAND

DIAMETER OF HOLE IN BEDROCK: 5"
CORE/REAM:

ELEVATION/DEPTH BOTTOM SCREEN: 660.79 / 104
ELEVATION/DEPTH BOTTOM OF SAND: 659.79 / 105
ELEVATION/DEPTH BOTTOM OF HOLE: 659.79 / 105
BACKFILL MATERIAL BELOW SAND: NONE

ACAD:FORM_MWINBR.dwg 07/20/99 INL

Tetra Tech NUS, Inc.

BORING LOG

PROJECT NAME: Crane NSWC
PROJECT NUMBER: 9060
DRILLING COMPANY: BOWSER MORNER
DRILLING RIG: VERSA-SONIC

BORING No.: 16MWT18
DATE: 1-18-04
GEOLOGIST: FRED W RAMSER
DRILLER: JOE McCLOUD

Sample No. and Type or RQD	Depth (Ft.) or Run No.	Blows / 6" or RQD (%)	Sample Recovery / Sample Length	Lithology Change (Depth/Ft.) or Screened Interval	Soil Density/ Consistency or Rock Hardness	Color	Material Classification	USCS*	Remarks	PID/FID Reading (ppm) Sample	Sampler BZ	Borehole**	Driller BZ**
						GREY	~1.0' GROUT.		SEE WELL LOG				
					MED HARD	MED GREY	SILTY SANDSTONE	BR	16MWT16	1.2			
									FOR LITHOLOGIC DETAILS 0'-40'			0	
								V.BR					
S-1	45	5%			MED SOFT	DK GREY	MUD STONE			8			
							POORLY BEDDED					0	
					SOFT					1.5			
	50		10/10									0	
					MED SOFT		DK GREY SHALE	V.BR	V.F. LAMINATION				
							POOR REC.			1.5		0	
							* DIFFICULTIES						
							EXTRACTING			2.0		0	
S-2	55	5%					CORE MUCH						
							OF CORE WENT						
							INTO MUD						
							PAN LOOKED						0
							GREY/DK SHALE						
	60		3/10										
							AS ABOVE	V.BR					
							60-65						
							MUDSTONE			52*			0
							POORLY LAM.						
S-3	65	0%											

* When rock coring, enter rock brokeness.

** Include monitor reading in 6 foot intervals @ borehole. Increase reading frequency if elevated reponse read.

Drilling Area Background (ppm): 0.0

Remarks: * HIGH PID MAYBE DUE TO HIGH MOISTURE CONTENT. AND HEATED CORE CASING STEAM. NO ODDERS NOTICED
SONIC DRILLING BEYOND CASING 4½ DRILL PIPE = 5" HOLE

Converted to Well: Yes ✓ No _____ Well I.D. #: 16MWT18

Tetra Tech NUS, Inc.

BORING LOG

PROJECT NAME: Crane NSWC
PROJECT NUMBER: 9060
DRILLING COMPANY: BOWSER/MORNER
DRILLING RIG: VERSA-SONIC

BORING No.: 16MWT18
DATE: 1-18-04
GEOLOGIST: FRED WRAMSER
DRILLER: JOE McCLOUD

Sample No. and Type or RQD	Depth (Ft.) or Run No.	Blows / 6" or RQD (%)	Sample Recovery / Sample Length	Lithology Change (Depth/Ft.) or Screened Interval	Soil Density/ Consistency or Rock Hardness	Color	Material Classification	USCS*	Remarks	PID/FID Reading (ppm) Sample	Sampler BZ	Borehole**	Driller BZ**
	65				MED SOFT	DK GREY	SHALE	V.BR					
							(SILT STONE)			12			
													0
	70		10/10										
					MED HARD	LT GREY	SILTY SAND STONE	BR					
							- POORLY LAMINATED			12			
							- V.F. BEDDED						0
S-4	75	10/10			MED SOFT	MED GREY	MUD STONE	V.BR		14			
						TO DK GREY	MORE SILT THAN CLAY						
					SOFT	BLK	SHALE (CLAYSTONE)	V.BR					0
							V.F. LAMINATIONS			20			
	80		10/10										
						BLK	SHALE	V.BR					
										21			0
					SOFT	DK GREY	MUDSTONE	BR					
S-5		5/10											
										14			
			5.0/8										0
	90				MED SOFT	DK GREY	SANDY SILTSTONE THIN LAMINATE	V.BR					

* When rock coring, enter rock brokeness.

** Include monitor reading in 6 foot intervals @ borehole. Increase reading frequency if elevated reponse read.

Drilling Area Background (ppm): ~

Remarks: PHOTO LOG: #544 40' - 70'
545 70 - 105

Converted to Well: Yes ✓ No _____ Well I.D. #: 16MWT18

Tetra Tech NUS, Inc.

BORING LOG

PROJECT NAME: Crane NSWC
PROJECT NUMBER: 9060
DRILLING COMPANY: BOWSER/MORNER
DRILLING RIG: VERSA-SONIC

BORING No.: 16MWT18
DATE: 1-18-04
GEOLOGIST: FRED WRAMSER
DRILLER: JOE McCLOUD

Sample No. and Type or RQD	Depth (Ft.) or Run No.	Blows / 6" or RQD (%)	Sample Recovery / Sample Length	Lithology Change (Depth/Ft.) or Screened Interval	Soil Density/ Consistency or Rock Hardness	Color	Material Classification	USCS*	Remarks	PID/FID Reading (ppm) Sample	Sampler BZ	Borehole**	Driller BZ**
	90												
					MED SOFT	MED GREY	SANDY SILTSTONE	V.BT		12			
							LAMINATIONS					0	0
S6	95	0%					SANDY SILTSTONE			20			
							GRADES TO SILTY						
							SANDSTONE VUGS						
			10 / 10				IRR LAM			22		0	0
					MED HARD								
	100												
					SOFT	BLK	COAL SEAM					0	0
S7										4			
		0%				WHT LT GREY	CLAYEY SILTSTONE						
	101					GREY	1 TR C-g SAND					0	0
	105		10 / 10				SANDSTONE						
							SCREEN 94-104						
							SAND 91 — 105						
							BENTONITE 2'-91'						

* When rock coring, enter rock brokeness.

** Include monitor reading in 6 foot intervals @ borehole. Increase reading frequency if elevated reponse read.

Drilling Area Background (ppm): –

Remarks:

Converted to Well: Yes ✓ No _____ Well I.D. #: 16MWT18

Tetra Tech NUS, Inc.

BORING LOG

PROJECT NAME: Crane NSWC
PROJECT NUMBER: 9060
DRILLING COMPANY: NA
DRILLING RIG: HAND AUGER

BORING No.: 16SB47
DATE: 12/5/03
GEOLOGIST: S. CRIER
DRILLER: NA

Sample No. and Type or RQD	Depth (Ft.) or Run No.	Blows / 6" or RQD (%)	Sample Recovery / Sample Length	Lithology Change (Depth/Ft.) or Screened Interval	MATERIAL DESCRIPTION: Soil Density/ Consistency or Rock Hardness	Color	Material Classification	USCS *	Remarks	PID/FID Reading (ppm): Sample	Sample BZ	Borehole**	Driller BZ**
	0					GR	GRAVEL + SANDY LOAM		Road Fill (Modified)				
						14.8 BR	SILTY CLAY W/ SOME GRAVEL + ORGANIC MATRL		Standing water in hole				
X	5												

* When rock coring, enter rock brokeness.

** Include monitor reading in 6 foot intervals @ borehole. Increase reading frequency if elevated reponse read.

Drilling Area Background (ppm):

Remarks:

Converted to Well: Yes ____ No ✓ Well I.D. #: ____

Tetra Tech NUS, Inc.

BORING LOG

PROJECT NAME: Crane NSWC
PROJECT NUMBER: 9060
DRILLING COMPANY: NA
DRILLING RIG: HAND AUGER

BORING No.: 16SB48
DATE: ~~SWMU 16~~ 12/5/07
GEOLOGIST: S. GRIER
DRILLER: NA

Sample No. and Type or RQD	Depth (Ft.) or Run No.	Blows / 6" or RQD (%)	Sample Recovery / Sample Length	Lithology Change (Depth/Ft.) or Screened Interval	MATERIAL DESCRIPTION: Soil Density/ Consistency or Rock Hardness	Color	Material Classification	USCS*	Remarks	PID/FID Reading (ppm): Sample	Sample**	Borehole**	Driller Bkg**
	0	0				Gr	SANDY LOAM + GRAVEL						
							SILTY CLAY W/ SOME GRAVEL + ORGANIC MATL		WATER STANDING IN HOLE				
	3												

* When rock coring, enter rock brokeness.

** Include monitor reading in 6 foot intervals @ borehole. Increase reading frequency if elevated reponse read.

Remarks:

Drilling Area Background (ppm):

Converted to Well: Yes ____ No ✓ Well I.D. #: ____

Tetra Tech NUS, Inc.

BORING LOG

PROJECT NAME: Crane NSWC
PROJECT NUMBER: 9060
DRILLING COMPANY: NA
DRILLING RIG: HAND AUGER

BORING No.: 16SB49
DATE: 12/5/03
GEOLOGIST: S. GRIER
DRILLER: NA

Sample No. and Type or RQD	Depth (Ft.) or Run No.	Blows / 6" or RQD (%)	Sample Recovery / Sample Length	Lithology Change (Depth/Ft.) or Screened Interval	MATERIAL DESCRIPTION: Soil Density/ Consistancy or Rock Hardness	Color	Material Classification	USCS*	Remarks	PID/FID Reading (ppm): Sample	Sample BZ	Borehole**	Driller BZ**
	0					GR	GRAVEL + SANDY LOAM		SLIGHTLY MOIST				
						Lt Br.	SILTY CLAY W/ GRAVEL + ORGANICS		WET + COHESIVE				
	5					Lt. Br.							

* When rock coring, enter rock brokeness.

** Include monitor reading in 6 foot intervals @ borehole. Increase reading frequency if elevated reponse read.

Drilling Area Background (ppm):

Remarks:

Converted to Well: Yes _____ No _____ Well I.D. #: _____

Tetra Tech NUS, Inc.

BORING LOG

PROJECT NAME: Crane NSWC
PROJECT NUMBER: 9060
DRILLING COMPANY: NA
DRILLING RIG: HAND AUGER

BORING No.: 16SB50
DATE: 12/5/02
GEOLOGIST: S. GRIER
DRILLER: NA

Sample No. and Type or RQD	Depth (Ft.) or Run No.	Blows / 6" or RQD (%)	Sample Recovery / Sample Length	Lithology Change (Depth/Ft.) or Screened Interval	MATERIAL DESCRIPTION: Soil Density/ Consistency or Rock Hardness	Color	Material Classification	USCS*	Remarks	PID/FID Reading (ppm): Sample	Sampler BZ	Borehole**	Driller BZ**
	0					Gr	GRAVEL + SANDY LOAM						
						Lt Br	SILTY CLAY w/ GRAVEL + ORGANIC MATRL		MOIST + COHESIVE				
	3												

* When rock coring, enter rock brokeness.

** Include monitor reading in 6 foot intervals @ borehole. Increase reading frequency if elevated reponse read.

Remarks:

Drilling Area Background (ppm):

Converted to Well: Yes ____ No ✓ Well I.D. #: ____

APPENDIX E

LABORATORY STANDARD OPERATING PROCEDURES

LABORATORY STANDARD OPERATING PROCEDURES

Laucks Testing Laboratory, Triangle Laboratory, Microseeps Laboratory and NSWC Crane Laboratory Analytical Standard Operating Procedures (SOPs) have previously been submitted as part of other QAPPs. Laucks Testing Laboratory and Triangle Laboratory SOPs were submitted as part of the approved Quality Assurance Project Plan for Ammunition Burning Grounds Little Sulphur Creek and Jeep Trail Resource Conservation and Recovery Act Phase III RCRA Facility Investigation. Microseeps SOPs were submitted as part of the Quality Assurance Project Plan Addendum No. 1 for SWMUs 12, 13, 16, and 19. NSWC Crane Laboratory analytical SOPs were submitted as part of the approved Work Plan for RCRA Facility Investigation Corrective Measures Study and Risk Assessment at Solid Waste Management Unit 2-Dye Burial Grounds. Analytical SOPs utilized for analysis of samples collected at SWMUs 12, 13, 16, and 19 are listed in the Table of Contents of this appendix. The SOPs listed in the Table of Contents have not changed since the issuance of the Quality Assurance Project Plan Addendum No. 1 for SWMUs 12, 13, 16, and 19 and are incorporated by reference.

LABORATORY STANDARD OPERATING PROCEDURES (SOPs)
TABLE OF CONTENTS

SOP No.	REV No.	QAPP/WP	TITLE
LAUCKS TESTING LABORATORIES			
LTL-1001	4	126[1]	Elements of SOP and Method Formats
LTL-1002	5	126[1]	Document Tracking and Control
LTL-1003	2	126[1]	Chain-of-Custody and Documentation Procedures
LTL-1004	4	126[1]	Documentation of Analyst Competence and Training
LTL-1005	5	126[1]	Analytical Balances
LTL-1006	3	126[1]	Refrigerator, Freezer, and Oven Thermometer Calibration and Maintenance
LTL-1007	3	126[1]	Use of Instrument Records and Logbooks
LTL-1008	6	126[1]	QC Corrective Action
LTL-1009	3	126[1]	Blind Spike Program
LTL-1011	4	126[1]	Procedures for the Determination and Reporting of Detection Limits, Reporting Limits, Precision and Accuracy Studies, and Control Limits
LTL-1012	2	126[1]	Solvent QC Monitoring for Trace Residue Analysis
LTL-1013	4	126[1]	Preparation, Storage, Shelf Life and Traceability Documentation of Standards and Reference Materials
LTL-1017	1	126[1]	Internal Audit Procedures
LTL-1018	1	126[1]	Overview of Review and Approval Practices for Validatable Data Packages
LTL-1019	2	166[2]	Controlling, Maintaining, and Monitoring Laboratory Logbooks
LTL-1020	2	166[2]	Integration of IC, GC, HPLC and GCMS Peaks
LTL-2001	6	166[2]	Waste Segregation and Disposal
LTL-3000	12	166[2]	Extraction Method for Base, Acid and Neutral Compounds in Water (8270C by 3520C)
LTL-3001	4	166[2]	Extraction Method for Polynuclear Aromatics in Water (8270C by 3520C)
LTL-3011	2	166[2]	Extraction Method for Chlorinated Herbicides in Soil (8151A by 3550B)
LTL-3077	5	166[2]	Extraction Method for Ordnance Compounds in Water
LTL-3100	11	126[1]	Extraction Method for Base, Acid and Neutral Compounds in Soils (8270C by 3550B)
LTL-3101	2	166[4]	Extraction Method for Base, Acid and Neutral Compounds in Soil (8270D by 3545A)
LTL-3161	5	166[2]	Extraction Method for Ordnance Compounds in Soils (8330)
LTL-3202	3	166[2]	Extraction Method for Organochlorine Pesticides and Polychlorinated Biphenyls in Water (8081A/8082 by 3510C)

LABORATORY STANDARD OPERATING PROCEDURES (SOPs)
TABLE OF CONTENTS

SOP No.	REV No.	QAPP/WP	TITLE
LTL-3302	2	126[1]	Extraction Method for Organochlorine Pesticides and Polychlorinated Biphenyls in Soil (8081A/8082 by 3550B)
LTL-3303	2	166[4]	Extraction Method for Organochlorine Pesticides and Polychlorinated Biphenyls in Soil (8081B/8082A by 3545A)
LTL-3450	1	126[1]	Extraction Method for Polynuclear Aromatics in Soil (8270C by 3550B)
LTL-3451	3	166[4]	Extraction Method for Polynuclear Aromatics in Soil (8270D by 3545A)
LTL-3510	8	166[2]	Extraction Method for Chlorinated Herbicides in Water (8151A by 3510C)
LTL-3550	5	166[2]	Extraction Method for Picric and Picramic Acids in Water (3510C)
LTL-3555	4	166[2]	Extraction Method for Piciric and Picramic Acids in Soil (3550B)
LTL-4002	6	126[1]	Electronic Sample Entry and Log-In
LTL-4103	0	126[1]	Reviewing a Sample Delivery Group (SDG) and Updating Projects in the LIMS
LTL-4201	0	126[1]	Package Deliverables for all Reporting Levels
LTL-6006	0	166[2]	Cation –Exchange Capacity of Soils (Sodium Acetate) by SW 846 Method 9081
LTL-6008	0	166[2]	The Determination of Acid Volatile Sulfides and Simultaneously Extracted Metals in Sediment
LTL-7003	2	126[1]	Inorganic Glass Cleaning Procedure
LTL-7009	3	126[1]	Microwave Assisted Acid Digestion of Aqueous Samples and Extracts Using SW846 Method 3015
LTL-7010	3	166[2]	Acid Digestion of Aqueous Samples and Extracts for Total Metals for Analysis by ICP Spectroscopy by SW846 Method 3010A
LTL-7012	1	126[1]	Microwave Assisted Acid Digestion of Sediments, Sludges, Soils, and Oils Using SW846 Method 3015
LTL-7015	1	126[1]	Acid Digestion of Sediments, Sludges, and Soils Using SW846 Method 3050B
LTL-7202	4	126[1]	Metals Analysis Using Inductively Coupled Plasma – Mass Spectrometry (ICP/MS) SW846 Method 6020
LTL-7501	2	166[2]	Operation of the PE FIMS 400 for the Analysis of Hg.
LTL-8000	2	126[1]	Determination of Retention Time Windows
LTL-8019	4	166[2]	Determination of Non-Halogenated Volatile Organics by SW 8015B
LTL-8084	5	166[2]	Analysis of Organochlorine Pesticides and PCBs by SW 846 Methods SW 8081A and 8082
LTL-8151	4	166[2]	Analysis of Chlorinated Herbicides by 8151A

LABORATORY STANDARD OPERATING PROCEDURES (SOPs)
TABLE OF CONTENTS

SOP No.	REV No.	QAPP/WP	TITLE
LTI-8265	4	166(2)	Determination of Volatile Organic Compounds by Method 8260B
LTL-8277	2	166(2)	Determination of Polynuclear Aromatic Hydrocarbon Compounds by Selective Ion Monitoring (SIM) Method 8270C
LTL-8279	7	166(2)	Determination of Semivolatile Organic Compounds by Method 8270C and 8270D
LTL-8302	1	126(1)	HPLC Ordnance 8330 Data Review
LTL-8303	5	166(2)	Determination of Picric and Picramic Acid
LTL-8330	11	166(2)	Determination of Nitroaromatics and Nitramines by SW-846 Method 8330
LTL-9104	3	166(2)	Preparation and Analysis of Total and Amenable Cyanide According to EPA Methods 335.1, 335.3, and SW 846 9012A
LTL-9109	4	166(4)	Ammonia Analysis by Lachet Auto-Analyzer, EPA Method 350.1
LTL-9110	8	166(2)	Determination of Anions by Ion Chromatography by Method 300.0A or 9056
LTL-9113	2	166(2)	pH in Soil and Waste Samples Using SW846 Method 9045C
LTL-9115	3	166(2)	The Determination of Total Organic Carbon in Water Samples by EPA 415.1 and SW-846 9060
LTL-9116	6	166(2)	The Determination of Total Organic Carbon in Soil/Sediment Samples Using Modified SW-846 Method 9060
LTL-9125	3	166(4)	Nitrate/Nitrite as Non-Lachet by EPA Method 353.2
LTL-9136	0	166(2)	Determination of Perchlorate by Ion Chromatography by EPA Method 314.0
LTL-9202	3	166(2)	Total Suspended Solids (Non-Filterable Residue) Using EPA Method 160.2
TRIANGLE LABORATORY			
2.04	6	166(2)	Nonconformance
5.01	10	166(2)	Sample Receipt, Identification, Handling, and Storage
DSP 105	16	166(2)	Extraction of PCDD/PCDF from Solids (not tissue) – 8290
DSP 161	18	166(2)	Extraction of PCDD/PCDF from Water for Methods 1613, 8290, and 551
DHR 182	9	166(2)	PCDDs and PCDFs by HRGC/HRMS – Method 8290
DPA 104	12	166(2)	Data Package Assembly and Shipping

LABORATORY STANDARD OPERATING PROCEDURES (SOPs)
TABLE OF CONTENTS

SOP No.	REV No.	QAPP/WP	TITLE
NSWC CRANE LABORATORY			
CR4052-PD-0001	1	166[2]	Quality Assurance and Control Plan
CR4052-PD-0100	3	166[2]	Document Control
CR4052-PD-0150	4	166[2]	Record Retention
CR4052-PD-0200	3	166[2]	Preventive Maintenance
CR4052-PD-0220	0	166[2]	Chemical/Supply Management
CR4052-PD-0250	1	166[2]	Calibration
CR4052-PD-0300	0	166[2]	Training Overview
CR4052-PD-0450	0	166[2]	Performance Evaluation
CR4052-PD-0500	1	166[2]	Chain of Custody: Soil and Water Samples
CR4052-PD-0600	2	166[2]	Customer Reports
CR4052-PD-0700	0	166[2]	Glassware Cleaning Procedure
CR4052-PD-2500	0	010[3]	Determination of Organic Colorants in Environmental Matrices by HPLC
MICROSEEPS LABORATORY			
SOP-ADM10	1	166[4]	Standard Operating Procedure for Glassware Washing
SOP-AM20GAx	2.1	166[4]	Analytical Method AM20GAx Standard Operating Procedure for the Analysis of Biodegradation Indicator Gases
SOP-PM01G	1.2	166[4]	Standard Operating Procedure for the Preparation of Samples for the Analysis of Biodegradatoin Indicator Gases

Shading indicates SOPs that have been revised or that have not been included in previous QAPPs.

1 "Quality Assurance Project Plan for Ammunition Burning Grounds Little Sulphur Creek and Jeep Trail Resource Conservation and Recovery Act Phase III RCRA Facility Investigation," NSWC Crane, April 2001.

2 "Quality Assurance Project Plan for Mine Fill A (SWMU 12), Mine Fill B (SWMU 13), Cast High Explosives Fill/B146 Incinerator (SWMU 16), and Pyrotechnic Test Area (SWMU 19) RCRA FRI Investigation," NSWC Crane, February 2002.

3 Risk Assessment Work Plan for Risk Assessment at SWMUs 4, 5, 9, and 10," August 2000.

4 "Quality Assurance Project Plan Addendum No. 1 for Mine Fill A (SWMU 12), Mine Fill B (SWMU 13), Cast High Explosives fill/B146 Incinerator (SWMU 16), and Pyrotechnic Test Area (SWMU 19) RCRA RFI Investigation," NSWC Crane, September 2003.

SOP No.—standard operating procedure number.
REV No.—SOP revision number.
QAPP—quality assurance project plan.
WP—work plan.