N00164.AR.001200
NSA CRANE
5090.3a

SAMPLING AND ANALYSIS PLAN FIELD SAMPLING AND QUALITY ASSURANCE PROJECT PLAN FOR VERIFICATION SOIL SAMPLING SOLID WASTE MANAGEMENT UNIT 12 BATTERY DUMP SITE NSA CRANE IN

10/1/2009

TETRA TECH NUS INC

Comprehensive Long-term Environmental Action Navy

CONTRACT NUMBER N62467-04-D-0055

Rev. 0
10/09

Sampling and Analysis Plan
Field Sampling Plan and
Quality Assurance Project Plan
for
Verification Soil Sampling
SWMU 12 Battery Dump Site

Naval Surface Warfare Center Crane
Crane, Indiana

Contract Task Order F271

October 2009

NAVFAC
Naval Facilities Engineering Command
Midwest
201 Decatur Avenue
Building IA, Code EV
Great Lakes, Illinois 60088

TETRA TECH NUS, Inc.

SAP Worksheet #1 -- Title and Approval Page

(UFP-QAPP Manual Section 2.1)

FINAL
SAMPLING AND ANALYSIS PLAN
Field Sampling Plan and Quality Assurance Project Plan
September 2009

Verification Soil Sampling
SWMU 12 Battery Dump Site

Naval Surface Warfare Center Crane
Crane, Indiana

Prepared for:
Naval Facilities Engineering Command Midwest
201 Decatur Avenue Building 1A, Code EV
Great Lakes, Illinois 60088

Prepared by:
Tetra Tech, Inc.
661 Andersen Drive
Foster Plaza 7
Pittsburgh, Pennsylvania 15220

Prepared under:
Comprehensive Long-Term Environmental Action Navy (CLEAN)
Contract N62472-03-D-0057
Contract Task Order F271

T.E. Johnston 9-30-09
Dr. Tom Johnston
QAM
Tetra Tech NUS, Inc.

Peter Ramanauskas 10-1-09
Peter Ramanauskas
Permitting Project Manager
U.S. EPA Region 5

Jose Cisneros 10/6/09
Jose Cisneros
Remediation and Reuse Branch
Chief, U.S. EPA Region 5

Steve Ruffing
Project Manager
Tetra Tech NUS, Inc.

10/6/09
Hak Cho
Corrective Action Section 1, Chief
U.S. EPA Region 5

Janice Shilling
Project Manager
Empirical Laboratories

Jon Tucker
NAVFAC QAO/Chemist
NSWC Crane

Allen Debus
Allen Debus
Quality Assurance Coordinator
U.S. EPA Region 5

Thomas J. Brent
Thomas J. Brent
PWD Crane
ER,N Site Manager

EXECUTIVE SUMMARY

This Sampling and Analysis Plan (SAP) encompasses Field Sampling Plan (FSP) requirements and Quality Assurance Project Plan (QAPP) requirements for verification soil sampling at the Battery Dump Site within Solid Waste Management Unit (SWMU) 12 at Naval Surface Warfare Center (NSWC) Crane, Crane, Indiana. This document constitutes the planning document, addressing specific protocols for sample collection, sample handling and storage, chain of custody, laboratory and field analyses, data validation, and data reporting.

This SAP was generated for and complies with applicable U.S. Navy, State of Indiana, and United States Environmental Protection Agency (U.S. EPA) Region 5 requirements, regulations, guidance and technical standards, especially U.S. EPA (2006) and Department of Defense (DoD) and Department of Energy (DOE)/U.S. EPA (2005). To comply with DoD/DOE/U.S. EPA (2005) requirements, this SAP is presented in the format of standard worksheets specified in the Uniform Federal Policy (UFP) QAPP.

NSWC Crane is located in southern Indiana, approximately 75 miles southwest of Indianapolis. SWMU 12 is located in the central portion of NSWC Crane and occupies approximately 200 acres. The Battery Dump Site, which is the subject of this SAP, is located in the southern portion of SWMU 12 and consists of approximately 4,245 square feet of contaminated surface and subsurface soil. The Battery Dump Site was discovered in the early 1990s and consists of two areas: (1) Battery Dump Area – where batteries were dumped on the ground surface and (2) Soil Area – an area adjacent to the Battery Dump Area where soil and construction debris were dumped forming small mounds. The Battery Dump Area was composed of a large number of AA batteries with only the inner cores visible.

Removal actions were implemented at the Battery Dump Site in both 2001 and 2002, but further contamination remained. In 2004, 2005, and 2006, a Resource Conservation and Recovery Act (RCRA) Facility Investigation (RFI) was conducted at the Battery Dump Site. The RFI delineated the horizontal and vertical extent of the remaining contamination, and the risk assessment concluded that the remaining contaminated soil poses unacceptable human health and ecological risk due to concentrations of antimony, arsenic, copper, chromium, iron, lead, mercury, silver, tin, and zinc. As a result, an Interim Measures Work Plan (IMWP) was developed to detail how the excavation activities will be executed. This SAP details the data collection plan for confirmatory soil sampling associated with the excavation.

References

U.S. EPA, 2005. Uniform Federal Policy for Quality Assurance Plans (UFP-QAPP).

U.S. EPA, 2006. U.S. EPA Requirements for Quality Assurance Project Plans (QA/R-5). EPA/240/B-01/003 March 2001 (re-issued May 2006).

SAP Worksheets

SAP Worksheet #1 -- Title and Approval Page 1
SAP Worksheet #2 -- SAP Identifying Information 9
SAP Worksheet #3 -- Distribution List 12
SAP Worksheet #4 -- Project Personnel Sign-Off Sheet 13
SAP Worksheet #5 -- Project Organizational Chart 14
SAP Worksheet #6 -- Communication Pathways 15
SAP Worksheet #7 -- Personnel Responsibilities and Qualifications Table 17
SAP Worksheet #8 -- Special Personnel Training Requirements Table 24
SAP Worksheet #9 -- Project Scoping Session Participants Sheet 25
SAP Worksheet #10 -- Problem Definition 28
SAP Worksheet #11 -- Project Quality Objectives/Systematic Planning Process Statements 32
SAP Worksheet #12 -- Measurement Performance Criteria Table note matrix in table entry 39
SAP Worksheet #13 -- Secondary Data Criteria and Limitations Table 40
SAP Worksheet #14 -- Summary of Project Tasks 41
SAP Worksheet #15 -- Reference Limits and Evaluation Table 44
SAP Worksheet #16 -- Project Schedule / Timeline Table (optional format) 45
SAP Worksheet #17 -- Sampling Design and Rationale 47
SAP Worksheet #18 -- Sampling Locations and Methods/SOP Requirements Table 51
SAP Worksheet #19 -- Analytical SOP Requirements Table 53
SAP Worksheet #20 -- Field Quality Control Sample Summary Table 54
SAP Worksheet #21 -- Project Sampling SOP References Table 55
SAP Worksheet #22 -- Field Equipment Calibration, Maintenance, Testing, and Inspection Table 57
SAP Worksheet #23 -- Analytical SOP References Table 59
SAP Worksheet #24 -- Analytical Instrument Calibration Table 60
SAP Worksheet #25 -- Analytical Instrument and Equipment Maintenance, Testing, and Inspection Table 62
SAP Worksheet #26 -- Sample Handling System 63
SAP Worksheet #27 – Sample Custody Requirements Table 64
SAP Worksheet #28 -- Laboratory QC Samples Table 66
SAP Worksheet #29 -- Project Documents and Records Table 68
SAP Worksheet #30 -- Analytical Services Table 69
SAP Worksheet #31 -- Planned Project Assessments Table 70
SAP Worksheet #32 -- Assessment Findings and Corrective Action Responses 71
SAP Worksheet #33 -- QA Management Reports Table 72
SAP Worksheet #34 -- Verification (Step I) Process Table 73
SAP Worksheet #35 -- Validation (Steps IIa and IIb) Process Table 74
SAP Worksheet #36 –Analytical Data Validation (Steps IIa and IIb) Summary Table 77
SAP Worksheet #37 -- Usability Assessment 78

List of Figures

Figure 10-1: Base and Site Location Map
Figure 10-2: Site Layout
Figure 10-3: Battery Site Layout
Figure 10-4: Limits of Excavation and Location of Initial XRF Sampling
Figure 17-1: SWMU 12 Excavation Sample Locations Example

List of Additional Tables

Table 17-1: Verification Sample Locations

List of Appendices

Appendix A Standard Operating Procedures
Appendix B EMAC Contractor's Information
Appendix C Empirical Laboratories Certification Letter, Laboratory Specifications, and Standard Operating Procedures

ACRONYMS

bgs	below ground surface
CA	corrective action
CCB	Continuing Calibration Blank
CCV	Continuing Calibration Verification
CERCLA	Comprehensive Environmental Response, Compensation, and Liability Act
CFR	Code of Federal Regulations
CLEAN	Comprehensive Long-Term Environmental Action Navy
CLP	Contract Laboratory Program
COC	contaminant of concern
CSM	Conceptual Site Model
CTO	Contract Task Order
DI	deionized
DoD	Department of Defense
DOE	Department of Energy
DoN	Department of the Navy
DQI	Data Quality Indicator
DQO	Data Quality Objective
DVM	Data Validation Manager
EMAC	Environmental Multiple Award Contract
FOL	Field Operations Leader
FSP	Field Sampling Plan
FTMR	Field Task Modification Request
GPS	Global positioning system
HASP	Health and Safety Plan
HSM	Health and Safety Manager
ICB	Initial Calibration Blank
ICP	Inductively Coupled Plasma
IDEM	Indiana Department of Environmental Management
IDW	investigation-derived waste
IM	Interim Measure
IMWP	Interim Measures Work Plan
IR	Installation Restoration
LCS	Laboratory Control Sample
LCSD	Laboratory Control Sample Duplicate
LIMS	Laboratory Information Management System

LOAEL	lowest observed adverse effects levels
MDL	Method Detection Limit
MFA	Mine fill A
mg/kg	milligram/kilogram
mg/L	milligram/liter
MPC	Measurement Performance Criterion
MS	Matrix Spike
NAVFAC	Naval Facilities Engineering Command
NFESC	Naval Facilities Engineering Service Center
NIST	National Institute of Standards and Technology
NSWC	Naval Surface Warfare Center
OSHA	Occupational Safety and Health Administration
PAL	Project Action Limit
PHSO	Project Health and Safety Officer
PM	Project Manager
PPE	Personal protective equipment
PRG	preliminary remediation goal
PQO	Project Quality Objective
QA	quality assurance
QAM	Quality Assurance Manager
QAO	Quality Assurance Officer
QAPP	Quality Assurance Project Plan
QC	quality control
QL	Quantitation Limit
QSM	Quality Systems Manual
RBC	Risk-based concentration
RCRA	Resource Conservation and Recovery Act
RFI	RCRA Facility Investigation
RISC	Risk Integrated System of Closure
RPD	Relative Percent Difference
RPM	Remedial Project Manager
RSD	Relative Standard Deviation
SAP	Sampling and Analysis Plan
SDG	Sample Delivery Group
sf	square feet
SOP	Standard Operating Procedure
SQL	Structured Query Language

SSO	Site Safety Officer
SWMU	Solid Waste Management Unit
TBD	To Be Determined
UFP	Uniform Federal Policy
U.S. EPA	United States Environmental Protection Agency
VOA	Volatile Organic Analyte
XRF	X-ray fluorescence analysis

SAP Worksheet #2 -- SAP Identifying Information

(UFP-QAPP Manual Section 2.2.4)

Site Name/Number:	NSWC Crane, Crane, Indiana
Solid Waste Management Unit:	SWMU 12
Contractor Name:	Tetra Tech
Contract Number:	N62472-03-D-0057
Contract Title:	Comprehensive Long-Term Environmental Action Navy (CLEAN)
Work Assignment Number (optional):	CTO F271

1. This SAP was prepared in accordance with the requirements of the *Uniform Federal Policy for Quality Assurance Plans (UFP-QAPP)* (U.S. EPA, 2005) and *U.S. EPA Guidance for Quality Assurance Project Plans, EPA QA/G-5, QAMS (2002)*.

2. Identify regulatory program: The Navy's Installation Restoration (IR) Program, Resource Conservation and Recovery Act (RCRA).

3. This SAP is a project-specific SAP.

4. List dates of scoping sessions that were held:

Scoping Session	Date
Project Kick-Off Meeting	June 10, 2009
Data Quality Objective (DQO) Meeting with Tom Johnston	June 18, 2009
Follow-Up DQO Meeting with Tom Johnston	June 25, 2009

5. List dates and titles of any SAP documents written for previous site work that are relevant to the current investigation.

Title	Date
Interim Measures Work Plan for SWMU 12 Battery Dump Site	July 2009

6. List organizational partners (stakeholders) and connection with lead organization:

Indiana Department of Environmental Management (IDEM) (regulatory stakeholder)
U.S. EPA Region 5 (regulatory stakeholder)
NSWC Crane (property owner)

7. Lead organization

Naval Facilities Engineering Command (NAVFAC) Midwest

8. If any required SAP elements or required information are not applicable to the project or are provided elsewhere, then note the omitted SAP elements and provide an explanation for their exclusion below:

UFP-QAPP Worksheet #	Required Information	Crosswalk to Related Information
A. Project Management		
Documentation		
1	Title and Approval Page	N/A
2	Table of Contents SAP Identifying Information	N/A
3	Distribution List	N/A
4	Project Personnel Sign-Off Sheet	N/A
Project Organization		
5	Project Organizational Chart	N/A
6	Communication Pathways	N/A
7	Personnel Responsibilities and Qualifications Table	N/A
8	Special Personnel Training Requirements Table	N/A
Project Planning/ Problem Definition		
9	Project Planning Session Documentation (including Data Needs tables) Project Scoping Session Participants Sheet	N/A
10	Problem Definition, Site History, and Background. Site Maps (historical and present)	N/A
11	Site-Specific Project Quality Objectives	N/A
12	Measurement Performance Criteria Table	N/A
13	Sources of Secondary Data and Information Secondary Data Criteria and Limitations Table	N/A
14	Summary of Project Tasks	N/A
15	Reference Limits and Evaluation Table	N/A
16	Project Schedule/Timeline Table	N/A
B. Measurement Data Acquisition		
Sampling Tasks		
17	Sampling Design and Rationale	N/A
18	Sampling Locations and Methods/ SOP Requirements Table Sample Location Map(s)	N/A
19	Analytical Methods/SOP Requirements Table	N/A
20	Field Quality Control Sample Summary Table	N/A
21	Project Sampling SOP References Table Sampling SOPs	N/A
22	Field Equipment Calibration, Maintenance, Testing, and Inspection Table	N/A
Analytical Tasks		
23	Analytical SOPs Analytical SOP References Table	N/A
24	Analytical Instrument Calibration Table	N/A
25	Analytical Instrument and Equipment Maintenance, Testing, and Inspection Table	N/A

UFP-QAPP Worksheet #	Required Information	Crosswalk to Related Information
	Sample Collection	
26	Sample Handling System, Documentation Collection, Tracking, Archiving and Disposal Sample Handling Flow Diagram	N/A
27	Sample Custody Requirements, Procedures/SOPs Sample Container Identification Example Chain-of-Custody Form and Seal	N/A
	Quality Control Samples	
28	QC Samples Table Screening/Confirmatory Analysis Decision Tree	N/A
	Data Management Tasks	
29	Project Documents and Records Table	N/A
30	Analytical Services Table Analytical and Data Management SOPs	N/A
	C. Assessment Oversight	
31	Planned Project Assessments Table Audit Checklists	N/A
32	Assessment Findings and Corrective Action Responses Table	N/A
33	QA Management Reports Table	N/A
	D. Data Review	
34	Verification (Step I) Process Table	N/A
35	Validation (Steps IIa and IIb) Process Table	N/A
36	Validation (Steps IIa and IIb) Summary Table	N/A
37	Usability Assessment	N/A

SAP Worksheet #3 -- Distribution List

(UFP-QAPP Manual Section 2.3.1)

Name of SAP Recipient	Title/Role	Organization	Telephone Number (Optional)	E-Mail Address or Mailing Address	Document Control Number (Optional)
Howard Hickey	NAVFAC Remedial Project Manager (RPM)	NAVFAC Midwest	847-688-2600, ext 243	Howard.hickey@navy.mil	Not Applicable
Tom Brent	Environmental Restoration Site Manager	NAVFAC PWD MW Crane	812-854-6160	Thomas.brent@navy.mil	Not Applicable
Peter Ramanauskas	U.S. EPA RPM	U.S. EPA Region 5	312-886-7890	U.S. EPA Region 5 77 West Jackson Blvd. Chicago, Illinois 60604	Not Applicable
Bonnie Capito	NAVFAC Atlantic/Librarian	NAVFAC Atlantic	757-322-4785	bonnie.capito@navy.mil	Not Applicable
Doug Griffin	State RPM	IDEM Office of Land Quality	317-233-2710	dgriffin@idem.in.gov	Not Applicable
Steve Ruffing	Tetra Tech Project Manager (PM)	Tetra Tech	412-921-8989	Steve.Ruffing@tetratech.com	Not Applicable
Janice Shilling	Laboratory PM	Empirical Laboratories	615-345-1115	jshilling@empirlabs.com	Not Applicable
Jon Tucker	NAVFAC Chemist	NAVFAC	757-322-8288	Jonathan.tucker@navy.mil	Not Applicable

Each person in this table will be responsible for distributing copies of this SAP to appropriate personnel within their organization. For example, the PM will be responsible for distributing copies of this SAP to all project personnel listed in Worksheet #4 (Project Personnel Sign-Off Sheet).

SAP Worksheet #4 -- Project Personnel Sign-Off Sheet

(UFP-QAPP Manual Section 2.3.2)

Key personnel will be instructed to read the SAP prior to attending an internal site-specific kick-off meeting for field activities. The Tetra Tech PM will track when the reviews have been completed, obtain signatures, and insure that the completed sign-off sheet is included in the central project file.

Name	Organization/Title/Role	Telephone Number (optional)	Signature/E-Mail receipt	SAP Section Reviewed	Date SAP Read
Steve Ruffing	Tetra Tech PM	412-921-8989		All	
James Goerdt	Tetra Tech/Field Operations Leader (FOL) and Site Safety Officer (SSO)	412-921-8425		All	
James Goerdt	Tetra Tech/Project Health and Safety Officer (PHSO)	412-921-8425		Worksheets #10, #11, #14 and Health and Safety Plan (HASP)	
Ed Sedlmyer	Tetra Tech/Project Chemist	412-921-8704		All	
Tom Johnston	Tetra Tech/Quality Assurance Manager (QAM)	412-921-8615		All	
Matt Soltis	Tetra Tech/Health and Safety Manager (HSM)	412-921-8912		HASP	
Joseph Samchuck	Tetra Tech/Data Validation Manager (DVM)	412-921-8510		Worksheets #12, #14, #15, #19, #20, #23-28, #30, #34-37	
Lee Leck	Tetra Tech/Data Manager	412-921-8856		Worksheets #12, #14, #15, #19, #20, #23-28, #30, #34-37	
Janice Shilling	Empirical Laboratories PM	615-345-1115		Worksheets #12, #14, #15, #19, #20, #23-28, #30, #34-36	

SAP Worksheet #5 -- Project Organizational Chart

(UFP-QAPP Manual Section 2.4.1)

Lines of Authority
Lines of Communication

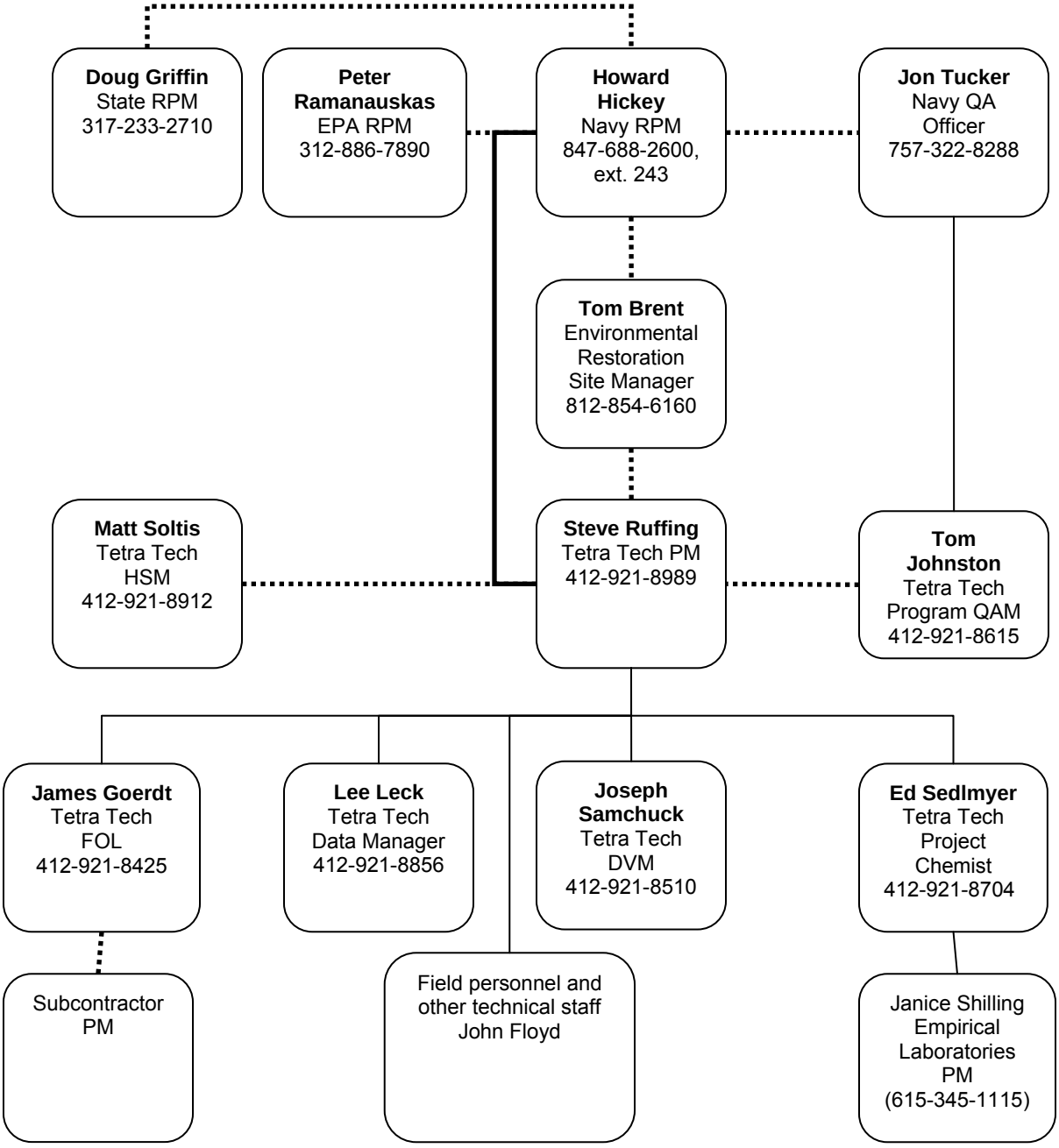

SAP Worksheet #6 -- Communication Pathways

(UFP-QAPP Manual Section 2.4.2)

Communication Driver	Responsible Affiliation	Name	Phone Number and/or E-Mail	Procedure
QAPP amendments	Tetra Tech PM NAVFAC RPM	Steve Ruffing Howard Hickey	412-921-8989 847-688-2600, ext. 243	After realizing an amendment is needed, PM will send NAVFAC a concurrence letter within 7 days. The NAVFAC RPM will sign the letter within 5 days of receipt.
Schedule changes	Tetra Tech PM	Steve Ruffing	412-921-8989	When impact is realized, PM will send NAVFAC a schedule concurrence letter within 7 days or prior to the first affected deliverable date.
Field issues that require changes in scope or implementation of field work	Tetra Tech FOL/SSO NAVFAC RPM Tetra Tech PM	James Goerdt Howard Hickey Steve Ruffing	412-921-8425 847-688-2600, ext. 243 412-921-8989	FOL will inform PM the day issue is realized. PM will inform the NAVFAC RPM via phone of the issue within 1 day of FOL's notification. PM will also send a concurrence letter to the NAVFAC RPM within 7 days, if project scope is affected. The NAVFAC RPM will sign the letter within 5 days of receipt. The PM will document changes on a Field Task Modification Request (FTMR) form.

Communication Driver	Responsible Affiliation	Name	Phone Number and/or E-Mail	Procedure
Laboratory results received by Tetra Tech	Tetra Tech PM	Steve Ruffing	412-921-8989	Tetra Tech PM communicates laboratory results to NAVFAC RPM via e-mail within 1 day of receiving results. This may trigger additional excavation by EMAC contractor. Continued excavation by EMAC contractor will require additional sampling by Tetra Tech as determined by the NAVFAC RPM.
Stop work recommendations, for example, to protect workers from unsafe conditions/situations or to prevent a degradation in quality of work	Tetra Tech FOL/SSO Tetra Tech PM Tetra Tech QAM NAVFAC RPM	TBD Steve Rufifng Tom Johnston Howard Hickey	TBD 412-921-8989 412-921-7273 847-688-2600, ext. 243	On the day the problem is identified, FOL, SSO, or QAM will inform PM and will document problem on an FTMR. On the same day of the notification from the FOL, PM will inform the NAVFAC RPM via phone.
Field or laboratory data issues	Laboratory PM Tetra Tech Project Chemist Tetra Tech PM	TBD Ed Sedlmyer Steve Ruffing	TBD 412-921-8704 Edward.sedlmyer@tetratech.com 412-921-8989 Steve.ruffing@tetratech.com	When issue is related to chemical data, Laboratory PM will notify Project Chemist via phone or e-mail within 2 days of identification of problem. Project Chemist will notify Tetra Tech PM within 1 day via phone or email.

SAP Worksheet #7 -- Personnel Responsibilities and Qualifications Table

(UFP-QAPP Manual Section 2.4.3)

Name	Title/Role	Organizational Affiliation	Responsibilities	Education and/or Experience Qualifications (Optional)
Steve Ruffing	PM	Tetra Tech	Oversees project, financial, schedule, and technical day to day management of the project. Specific responsibilities include: • Ensuring timely resolution of project-related technical, quality, and safety questions associated with Tetra Tech operations. • Functioning as the primary Tetra Tech interface with the NAVFAC RPM, regulators, Tetra Tech field and office personnel, and laboratory points of contact. • Ensuring that Tetra Tech health and safety issues related to this project are communicated effectively to all personnel and off-site laboratories. • Monitoring and evaluating all Tetra Tech subcontractor performance. • Coordinating and overseeing work performed by Tetra Tech field and office technical staff (including data interpretation, and report preparation).	B.S. Civil Engineering, 21 years of engineering experience

Name	Title/Role	Organizational Affiliation	Responsibilities	Education and/or Experience Qualifications (Optional)
			• Coordinating and overseeing maintenance of all Tetra Tech project records. • Coordinating and overseeing review of Tetra Tech project deliverables. • Preparing and issuing final Tetra Tech deliverables to NAVFAC.	
James Goerdt	FOL	Tetra Tech	Supervises, coordinates, and performs field sampling activities. Specific responsibilities include: • Functioning as the on-site communications link between field staff members, subcontractors, and Tetra Tech PM • Overseeing the mobilization and demobilization of all field equipment and subcontractors. • Coordinating and managing the field technical staff. • Adhering to the work schedules provided by the Tetra Tech PM. • Ensuring the proper maintenance of site logbooks, field logbooks, and field recordkeeping. • Initiating FTMRs when necessary.	

Name	Title/Role	Organizational Affiliation	Responsibilities	Education and/or Experience Qualifications (Optional)
			• Identifying and resolving problems in the field, implementing and documenting corrective action (CA) procedures, and providing communication between the field team and project management. • Ensuring that all health and safety requirements for the investigation are implemented. • Alerting off-site analytical laboratories of any special health and safety hazards associated with environmental samples. • Initiating and conducting equipment inventories to ensure that required equipment is available, purchasing equipment as required, staging equipment for efficient loading and transport from the Tetra Tech office to the site, and, after field activities are completed, demobilizing the equipment.	
Peter Ramanauskas	Project Manager	U.S. EPA Region 5	• Overseeing implementation of UFP SAP. • Representing agency interests. • Providing agency input.	

Name	Title/Role	Organizational Affiliation	Responsibilities	Education and/or Experience Qualifications (Optional)
James Goerdt	SSO	Tetra Tech	The SSO will be responsible for training and monitoring site conditions. Details of these responsibilities are presented in the HASP and include: • Controlling specific health and safety-related field operations such as personnel decontamination, monitoring of worker heat or cold stress, and distribution of safety equipment. • Conducting and documenting a daily health and safety briefing each day while on site. • Ensuring that field personnel comply with all procedures established in the HASP. • Identifying an alternate SSO in his/her absence. • Terminating work if an imminent safety hazard, emergency situation, or other potentially dangerous situation is encountered. • Ensuring the availability and the condition of health and safety monitoring equipment. • Coordinating with the Tetra Tech PM to institute and document any necessary HASP modifications.	

Name	Title/Role	Organizational Affiliation	Responsibilities	Education and/or Experience Qualifications (Optional)
			• Ensuring that facility personnel and subcontractors are adequately advised and kept clear of potentially contaminated materials.	
Dr. Tom Johnston	QAM	Tetra Tech	Reviews the SAP, oversees preparation of lab scope, and conducts data quality review. Ensures that quality aspects of the CLEAN program are implemented. Specific responsibilities include: • Developing, maintaining, and monitoring quality assurance (QA) policies and procedures. • Providing training to Tetra Tech staff in QA/quality control (QC) policies and procedures. • Conducting systems and performance audits to monitor compliance with environmental regulations, contractual requirements, SAP requirements, and corporate policies and procedures. • Auditing project records. • Monitoring subcontractor quality controls and records.	Ph.D. Analytical Chemistry, 32 years environmental experience.

Name	Title/Role	Organizational Affiliation	Responsibilities	Education and/or Experience Qualifications (Optional)
			• Assisting in the development of CA plans and ensuring correction of non-conformances reported in internal or external audits. • Ensuring that this SAP meets Tetra Tech, Department of the Navy (DoN), and U.S. EPA QA requirements. • Preparing QA reports for management.	
Joseph Samchuck	DVM	Tetra Tech	Manages data validation activities within Tetra Tech, including: • Ensuring QA of data validation deliverables. • Providing technical advice on data usability. • Coordinating and maintaining data validation review schedule.	MBA, M.S. Finance, B.S. Chemistry, 24 years environmental experience.
Matt Soltis	HSM	Tetra Tech	Oversees Tetra Tech CLEAN Program Health and Safety Program including: • Providing technical advice to the Tetra Tech PM on matters of health and safety. • Overseeing the development and review of the HASP. • Conducting health and safety audits.	CIH, CSP, B.S. Industrial Safety Sciences, 24 years environmental experience.

Name	Title/Role	Organizational Affiliation	Responsibilities	Education and/or Experience Qualifications (Optional)
			• Preparing health and safety reports for management.	
Ed Sedlmyer	Project Chemist	Tetra Tech	Provides support to the project including: • Assisting in the preparation of SAP. • Preparing laboratory scopes of work, coordinating analyses with laboratory chemists, ensuring that the laboratory scope of work is followed, and communicating with Tetra Tech staff. • Providing technical advice to the Tetra Tech team on matters of project chemistry. • Reviewing laboratory data. • Evaluating data usability. • Functioning as the primary interface between the subcontracted laboratory and Tetra Tech staff.	B.S. Environmental Science, 22 years environmental experience
Janice Shilling	Laboratory PM	Empirical Laboratories	Coordinates analyses with lab chemists, ensures that scope of work is followed, provides QA of data packages, and communicates with Tetra Tech project staff.	Can be provided upon request

SAP Worksheet #8 -- Special Personnel Training Requirements Table

(UFP-QAPP Manual Section 2.4.4)

All field personnel will have appropriate training to conduct the field activities to which they are assigned. Additionally, each site worker will be required to have completed a 40-hour course (and 8-hour refresher, if applicable) in Health and Safety Training as described under Occupational Safety and Health Administration (OSHA) 29 Code of Federal Regulations (CFR) 1910.120(b)(4). Safety requirements are addressed in greater detail in the corporate Tetra Tech HASP.

SAP Worksheet #9 -- Project Scoping Session Participants Sheet

(UFP-QAPP Manual Section 2.5.1)

Project Name: SWMU 12 Battery Dump Site Projected Date(s) of Sampling: September 2009 Project Manager: Steve Ruffing	Site Name: SWMU 12 Battery Dump Site Site Location: NSWC, Crane, Indiana

Date of Session: June 18, 2009
Scoping Session Purpose: DQO Meeting

Name	Title	Affiliation	Phone #	E-mail Address	Project Role
Steve Ruffing	PM	Tetra Tech	412-921-8989	Steve.Ruffing@tetratech.com	Project Manager
Tom Johnston	QAM	Tetra Tech	412-921-8615	Tom.Johnston@tetratech.com	QAPP Facilitator
Kelly Carper	Environmental Scientist	Tetra Tech	412-921-7273	Kelly.Carper@tetratech.com	Technical support
Tim Smith	Engineer	Tetra Tech	412-921-7720	Timothy.Smith@tetratech.com	Engineer
Ed Sedlmyer	Chemist	Tetra Tech	412-921-8704	Edward.Sedlmyer@tetratech.com	Chemist
Betsy Collins	Engineer	Tetra Tech	412-921-8250	Betsy.Collins@tetratech.com	Technical support

June 18, 2009 Scoping Session:

The Interim Measures Work Plan for SWMU 12, which has been reviewed and approved by the Navy, established the scope of the verification sampling activities addressed in this SAP. Tetra Tech was tasked with developing the data quality objectives to meet the scope.

June 18, 2009 Scoping Session Items:

Action Items:

1) Correlate lead concentration data with other contaminants of concern (COC) concentration data. Exceedances of lead criteria did not correlate with other COC exceedances. See Section 11.5.3 for further discussion of correlations.

2) If lead concentrations correlate well with other COC concentrations, obtain a site-specific X-ray fluorescence analysis (XRF) screening concentration from Ralph Basinski.

3) Confirm Environmental Multiple Award Contract (EMAC) contractor's responsibility to survey pre- and post-excavation limits. Steve Ruffing confirmed that the EMAC contractor is responsible for surveying the pre- and post- excavation limits.

Consensus Decisions:

1) If lead concentrations correlate well with other COC concentrations, XRF will be used as a field screening tool to determine if it is necessary to excavate more soil. Composite samples will be used in this field screening exercise (i.e., aliquots will not be tested separately). The lead concentrations did not correlate well with other COC concentrations. In an effort to save time and money during excavation, however, field XRF analysis for lead only will be used to guide the real time excavation (see next note).

2) Composite samples with XRF lead concentrations less than 370 mg/kg (the site-specific XRF screening concentration) will be sent to the fixed-base laboratory. Composite samples with XRF lead concentrations greater than 370 mg/kg will not be sent to the fixed-base laboratory and further excavation will be recommended at these locations. This number was obtained by solving the regression equation: Ln (400 mg/kg) = -0.4224 + 1.0789* x, where x = the site specific XRF number. This equation was created using lab and XRF data obtained during a RCRA Facility Investigation for the UXO 7 Ranges at NSWC Crane (Tetra Tech, 2009). A more conservative number was not chosen to minimize excavating clean material. The field XRF data will be considered screening data and will not be used to make definitive decisions. Definitive decisions will be based on laboratory data only.

<u>June 25, 2009 Meeting with Collins, Smith, Johnston, Carper and Basinski</u>

Action Items:

1) Confirm the verification sampling scheme detailed in the Interim Measures Work Plan (IMWP) will be followed.

Consensus Decisions

1) The verification sampling scheme in the approved SWMU 12 Battery Dump Site IMWP must be followed for this SAP.

References

Tetra Tech, 2009. Resource Conservation and Recovery Act Facility Investigation for UXO 7 Ranges. Naval Surface Warfare Center, Crane Division, Crane, Indiana. July.

SAP Worksheet #10 -- Problem Definition

(UFP-QAPP Manual Section 2.5.2)

10.1 SITE DESCRIPTION AND HISTORY

The Battery Dump Site is located within the boundaries of Naval Surface Warfare Center (NSWC) Crane, Indiana, approximately 75 miles southwest of Indianapolis and 71 miles northwest of Louisville, Kentucky (Figure 10-1). NSWC Crane encompasses 62,463 acres (approximately 98 square miles) in a rural sparsely populated area. Most of NSWC Crane is forested, and the surrounding area is wooded or farmed land. NSWC Crane provides material, technical, and logistical support to the Navy for equipment, shipboard weapons systems, and non-expendable ordnance items. In addition, NSWC Crane supports the Crane Army Ammunition Activity with production, renovation, storage, shipment, demilitarization, and disposal of conventional ammunition.

SWMU 12 consists of Mine Fill A (MFA) and the surrounding area. SWMU 12 is located in the central portion of NSWC Crane, as shown on Figure 10-1, and occupies approximately 200 acres, including the area located within the southern portion of the SWMU identified as the Battery Dump Site (Figure 10-2).

In the early 1990s, a battery disposal area was discovered at the southern end of MFA, approximately 140 feet outside of the perimeter fence (Figure 10-3). The battery disposal area consisted of two areas: (1) Battery Dump Area – where batteries were dumped on the ground surface and (2) Soil Area – an area adjacent to the Battery Dump Area where soil and construction debris were dumped forming small mounds. The Battery Dump Area was composed of a large number of AA batteries with only the inner cores visible on the ground surface. The Battery Dump site currently contains an estimated 4,145 square feet (sf) of contaminated surface soil and 100 sf of contaminated subsurface soil (Tetra Tech, 2009).

The ground surface at the Battery Dump Site is vegetated with grass, tall weeds, and saplings. Areas to the west, south, and east are heavily wooded, and although the Battery Dump Site is relatively flat, the terrain slopes away from the Battery Dump Site in these three directions. Erosion potential is limited by the vegetation. Bedrock is within 10 feet of ground surface.

10.2 PREVIOUS INVESTIGATIONS

10.2.1 Battery Dump Site Interim Measures

In September 2001 and June 2002, an interim measure (IM) action was conducted that included identification, removal, treatment, and disposal of contaminated soil from the SWMU 12 Battery Dump Site.

The September 2001 IM removal action in the Soil Area included excavation and treatment of 18 tons of explosives-contaminated soil to remove the explosives (TolTest, 2002). Post-excavation sampling and analysis of the Soil Area indicated that remaining contamination concentrations were less than IDEM Default Closure Levels for industrial receptors (IDEM, 2001). Based on the post-excavation analytical results, no further action was recommended for the Soil Area.

The September 2001 and June 2002 IM removal activities at the Battery Area included excavation and off-site disposal of 299 tons of metals-contaminated soil (TolTest, 2002). Post-excavation sampling and analysis indicated that concentrations of lead were greater than the IDEM Default Closure Level for industrial receptors (IDEM, 2001). Post-IM recommendations included further investigation of lead contamination at the SWMU 12 Battery Area, including expansion of the investigation area and additional sampling.

In September 2002, a follow-up IM action was performed at the Soil Area. About 20 tons of contaminated soil was excavated and disposed of, but the horizontal and vertical extent of this contamination was not determined. Four post-excavation samples were collected, and the results confirmed that contaminated soil is still present at the site. Results indicated that concentrations of antimony and lead at two sample locations and arsenic at all four locations exceeded industrial clean-up goals. However, with the exception of one sample, arsenic concentrations in these samples were less than the maximum detection of 10.2 mg/kg in the Basewide Background Soil Investigation Report (Tetra Tech, 2001). TolTest (the removal action contractor) recommended the excavation of additional exploration trenches to determine the horizontal extent of metals contamination in the area.

10.2.2 Battery Dump Site RFI Sampling

Following the 2001 and 2002 IMs, an RFI was conducted at the SWMU 12 Battery Dump Site in three phases to delineate the horizontal and vertical extent of contamination remaining at the Battery Dump Site. Analytical results from the 2004, 2005, and 2006 RFI field events adequately delineated the horizontal and vertical extent of contamination remaining at the SWMU 12 Battery Dump Site.

Human health and ecological risk assessments completed as part of the RFI determined that COCs in surface and subsurface soil at the SWMU 12 Battery Dump Site are: antimony, arsenic, copper, chromium, iron, lead, mercury, silver, tin, and zinc (Tetra Tech, 2008).

10.2.3 Interim Measures Work Plan for SWMU 12 Battery Dump Site

An IMWP was developed to detail how the excavation activities will be executed (Tetra Tech, 2009). The IMWP also established the preliminary remediation goals (PRGs), the excavation limits and the verification sampling scheme. The PRGs were used to determine the excavation limits shown in Figure 10-4. PRG development and determination of excavation limits is discussed in Section 11.2. The verification sampling scheme is discussed in Worksheet #17.

10.3 CONCEPTUAL SITE MODEL

The RFI concluded that surface and subsurface soil at the SWMU 12 Battery Dump Site is a continuing source of metals contamination that has the potential to contaminate groundwater beneath the Battery Dump Site. The risk assessments performed during the RFI determined that antimony, arsenic, copper, chromium, iron, lead, mercury, silver, tin, and zinc are COCs leading to unacceptable human health (i.e., incremental cancer risk is greater than 10^{-4} and hazard index greater than 1.0) and ecological risks (Tetra Tech, 2008). See Figures 5-5 through 5-12 of Appendix A in the IMWP for information on the extent of contamination of each COC.

NSWC Crane is an active Naval Base and will remain active for the foreseeable future. SWMU 12 is an active industrial facility, and operations at this facility are expected to continue for the foreseeable future. Hence under the current land use maintenance workers, site workers, and potential trespassers and construction workers may be exposed to these soil COCs.

10.4 PROBLEM DEFINITION

Contaminated soil at the Battery Dump Site must be removed to reduce human health and ecological risks to acceptable levels and close the site for no further action (Tetra Tech, 2009). See Figure 10-4 for the minimum and maximum potential excavation limits.

References

IDEM, 2001. IDEM Risk Integrated System of Closure Users Guide and Technical Resource Guidance Document. Indiana Department of Environmental Management. February 2001.

Tetra Tech, 2001. Final Basewide Background Soil Investigation Report, Naval Surface Warfare Center Crane, Crane, Indiana. Revision 1, January.

Tetra Tech, 2008. Resource Conservation and Recovery Act Facility Investigation Report for Mine Fill A (SWMU 12), Naval Surface Warfare Center Crane Division, Crane, Indiana.

Tetra Tech, 2009. Interim Measures Work Plan for SWMU 12 Battery Dump Site, Naval Surface Warfare Center Crane Division, Crane, Indiana. July.

TolTest, 2002. Interim Measures Report for Removal and Disposal of Contaminated Soil from the Mine Fill A Battery Site, Naval Surface Warfare Center Crane Division, Crane, Indiana.

SAP Worksheet #11 -- Project Quality Objectives/Systematic Planning Process Statements

(UFP-QAPP Manual Section 2.6.1)

11.0 PROJECT QUALITY OBJECTIVES/SYSTEMATIC PLANNING PROCESS

Project quality objectives (PQOs) for the SWMU 12 Battery Dump Site are presented in this section. PQOs document the environmental decisions that need to be made at a site as well as the level of data quality necessary to support these decisions. To establish PQOs for the site, the U.S. EPA's seven-step DQO process was followed (U.S. EPA, 2006).

11.1 DECISION STATEMENT

Determine whether unacceptable levels of contamination remain in the surface or subsurface soil after excavation. If the concentration of any of the 10 COCs listed below exceeds the preliminary remediation goals (PRGs) in any sample, the project team will evaluate site-wide risks for the selected COCs. If either human health or ecological risk is unacceptable, the team will recommend further excavation to remove the contamination (Tetra Tech, 2009). If the concentrations of all 10 COCs are less than PRGs in all samples or if the computed risks are acceptable, then the project team will recommend no further action.

Contaminants of Concern:

SWMU 12 Battery Dump Site: Surface and Subsurface Soil[1]	
COCs	**Surface/Subsurface Soil PRGs (mg/kg)**
Antimony	**31**
Arsenic	**10.2**
Chromium	**26**
Copper	**28**
Iron	**40,800**
Lead	**400**
Mercury	**2.1**
Silver	**4.2**
Tin	**10**
Zinc	**49**

1 From the SWMU 12 IMWP (Tetra Tech, 2009)

11.2 INFORMATION INPUTS

Data required to make decisions include the following:

1. PRGs as developed in Tetra Tech (2009) for surface/subsurface soil at the SWMU 12 Battery Dump Site. These are the project action limits to be used for decision making at individual sampling locations. When the background concentration was higher than the human health and ecological risk screening criteria, the background value was set as the PRG. The background concentrations used were from the Basewide Background Soil Investigation Report (Tetra Tech, 2001). The screening criteria used to develop PRGs are listed in Table 2-2 through 2-4 of the IMWP (Tetra Tech, 2009).

2. Maximum backfill concentrations listed in the IMWP for the SWMU 12 Battery Dump Site (Tetra Tech, 2009). A list containing maximum backfill concentrations for all COCs at SWMU 12 is provided below. Tetra Tech will use the backfill concentrations to calculate the concentration of COCs after excavation is completed (see section 11.2.3 below). The EMAC contractor is responsible for testing backfill soil to ensure it meets the requirements listed in the IMWP for the SWMU 12 Battery Dump Site (Tetra Tech, 2009).

Chemical of Concern	Maximum Backfill Concentration (mg/kg)
Antimony	0.27
Arsenic	0.39
Chromium	26
Copper	28
Iron	23, 500
Lead	11
Mercury	0.5
Silver	4.2
Tin	1
Zinc	46

3. The concentration of each COC at the limits of excavation for comparison with the PRGs to determine whether any potentially unacceptable human health or ecological risks remain on-site. Excavation limits were developed in the IMWP by removing locations, beginning with a group of samples with elevated concentrations, and replacing these samples with soil containing the maximum backfill concentrations for each of the ten COCs. IMWP calculations have shown that if the average COC concentrations of the verification samples are less than PRGs, and the excavation is filled in with soil containing COCs with concentrations that are at backfill criteria, risks at the Battery Dump Site will be within the U.S. EPA acceptable risk range. It is expected that composite samples, the density of which was prescribed by U.S. EPA in comments on the IMWP for SMWU 12, will adequately represent the sidewalls and floor of the excavation. This approach is consistent with approaches previously used at NSWC Crane.

4. Human Health risk levels considered to be unacceptable. Four constituents (antimony, arsenic, iron, and lead) were identified as COCs for human health at SWMU 12. Risks for these COCs will be evaluated by comparing average concentrations for all samples remaining after excavation to risk-based concentrations (RBCs) assuming future residential exposures. The RBCs for antimony and iron will be based on a noncarcinogenic hazard quotient of 1.0. The RBC for arsenic will be based on a cancer risk of $1x10^{-4}$. Because lead has not been classified as to its carcinogenicity, lead will be evaluated by a direct comparison of the average concentration to the residential screening level (400 mg/kg). If the ratio of the average concentration for a chemical to its RBC is less than 1.0, risks will be considered acceptable and no further excavation will be needed for that chemical. Otherwise, the project team will recommend further excavation.

5. Ecological Risk levels considered to be unacceptable. Nine constituents (antimony, arsenic, copper, chromium, lead, mercury, silver, tin, and zinc) were identified as COCs for ecological risk at SWMU 12. For evaluating risks to mammals and birds, if the average concentration for a chemical does not result in a hazard quotient of greater than 1.0 for wildlife using average exposure factors and lowest observed adverse effects levels (LOAELs), then risks are considered acceptable and no further excavation is needed for that chemical for that receptor. If the average concentration for a chemical results in an unacceptable risk to wildlife (hazard quotient greater than 1.0 for wildlife), the project team will recommend further excavation. For evaluating risks to plants and invertebrates, if the average concentration of a chemical is less than two times conservative screening levels for plants and invertebrates, then risks are considered acceptable and the project team will recommend no further excavation for that chemical for those receptors. If the average concentration for a chemical results in unacceptable risk to plants and invertebrates (two times the conservative screening level), the project team will recommend further excavation. [Note: Two times the screening level was used because screening levels are conservative and were not intended to be cleanup levels. Therefore, because exceedances of the values do not necessarily indicate an impact will occur, a less conservative approach is used to determine excavation area versus the conservative approach when screening chemicals for an ecological risk assessment.]

6. The site-specific XRF screening concentration (see the June 18, 2009 Consensus Decisions in Worksheet #9).

7. An XRF reading for each composite sample collected. XRF sampling will be performed where indicated on Figure 10.4.

8. Land surveyed pre- and post-excavation limits to verify the soil with known contamination was removed.

11.3 STUDY AREA BOUNDARY

Horizontal Boundary: The estimated minimum horizontal excavation limit was established in the SWMU 12 IMWP and is shown as a red boundary on Figure 10-4 (Tetra Tech, 2009). If necessary, additional sampling will extend beyond this boundary until the limits of excavation are shown to meet risk requirements. The potential maximum excavation limits are also shown on Figure 10-4; however, the maximum horizontal excavation limits will be reached when the concentrations of COCs in soil remaining at the SWMU 12 Battery Dump Site do not pose unacceptable human health and ecological risk. The lateral exposure unit for both human health and ecological risks is the area of the potential (maximum) excavation limits (11,762 sf).

Vertical Boundary: The estimated minimum vertical boundary was established in the SWMU 12 IMWP and is shown on Figure 10-4 (Tetra Tech, 2009). The potential (maximum) vertical limits are also shown on Figure 10-4; however, the maximum vertical excavation limits will be reached when the concentration of COCs in soil remaining at the SWMU 12 Battery Dump Site do not pose unacceptable human health and ecological risk.

Surface soil is between 0 to 2 feet below ground surface (bgs) and subsurface soil is between 2 to 6 feet bgs.

The risk exposure unit is the entire site depicted as the Battery Dump Site Boundary in Figure 10-4.

In addition to the Battery Dump Site, the IM support facility, the areas beneath excavation and decontamination equipment, must be evaluated to ensure that contaminants have not been redistributed and deposited there during excavation activities. Investigation of these areas will be limited to surface soil because contaminant releases would be to the surface. Section 11.6.2 describes these areas in more detail.

11.4 DECISION RULE

If the concentration of any COC in a composite sample on a sidewall or floor of the excavation exceeds its PRG, the project team will reevaluate site-wide risks. Otherwise, if all samples are less than PRGs, the site risks will be considered acceptable. Risk assessment methodology is described in Section 11.3. If risks are unacceptable for human health or ecological risk, the project team will recommend continued excavation in the direction of contaminated soil at those locations where PRGs are exceeded. If neither

human health nor ecological risk is unacceptable, the team will recommend no further action (i.e., stop excavation).

Note: If further excavation is required, the lateral and vertical step-out distance, which will be determined by the Navy RPM, will be based on observed concentration gradients and the expected locations at which contaminant concentrations are less than unacceptable levels. Excavation will continue, at the discretion of the Navy RPM, until all verification sample results indicate that all COC concentrations within the excavated area are less than the PRGs.

11.5 PERFORMANCE CRITERIA

11.5.1 Justification for Number of Composite Samples

The primary objective for sampling at this site is to compare data to applicable risk-based screening criteria (PRGs) to determine if concentrations of COCs are present at levels that result in unacceptable risks. The number of samples to be collected from the floor and sidewall areas of the excavation follows U.S. EPA protocol; thus, a statistical analysis to determine the number of samples to collect from the excavation is not necessary. Also, it is concluded that the data will be of sufficient type, number, and quality if they satisfy the data validation criteria and usability assessment requirements. In general, these requirements that the data be representative of the targeted soil population, that the data be generated by sufficiently sensitive analytical methods that are operating within quality control limits, and that the data are considered to be comparable in terms of quality and representativeness in light of project objectives and decision rules. Laboratory QC limits and project action limits are presented in Worksheet #15.

11.5.2 Justification for Number of Grab Samples

Statistically based designs used at other Navy facilities have used six grab samples per composite for an area larger than 1,000 sf, so six grab samples is considered sufficient for an area smaller than 1,000 sf. Also, both the Navy and the U.S. EPA have approved this sampling approach for the SWMU 12 Battery Dump Site.

11.6 SAMPLING DESIGN

11.6.1 Verification Sampling of Excavation Areas

Verification samples will be collected from the excavation floor and sidewalls to confirm the removal of COCs with concentrations that exceed acceptable risk levels. As determined in the IMWP for the SWMU 12 Battery Dump Site, a minimum of five composite floor samples and 19 composite sidewall samples will be collected from the SWMU 12 Battery Dump Site (Tetra Tech, 2009). If the excavation area exceeds

the minimum excavation area shown on Figure 10-4, more verification samples will be collected as described in Worksheet #17.

To guide excavation activities, all composite samples will be field tested with XRF for lead as described in Worksheet #17.

11.6.2 Verification Sampling of Support Facility Areas

To ensure that contaminants have not been released to support facility areas during excavation activities, verification samples will be collected from surface soil below the decontamination pad, material handling pad, gravel construction entrance and any other support facility constructed by the EMAC contractor. Based on the anticipated footprints of the support facilities, it is estimated that seven verification floor samples will be collected from the support facility areas. See Worksheet #17 for more information on verification sampling of support facility areas.

11.6.3 Characterization Sampling of Material for Disposal Purposes

Waste characterization sampling is the responsibility of the EMAC contractor and is not described in this SAP. The EMAC contractor's Standard Operating Procedures (SOPs), disposal facility information and laboratory information are provided in Appendix B of this SAP. See Section 3.2.5 of the IMWP for SWMU 12 Battery Dump Site for further information on characterization sampling for disposal purposes (Tetra Tech, 2009).

11.6.4 Characterization Sampling of Backfill Material

The EMAC contractor is responsible for obtaining backfill material and completing characterization sampling of backfill material, thus characterization sampling of backfill material is not described in this SAP. The decision that human health and ecological risk is at acceptable levels is based on fill material having COC concentrations less than PRGs. The EMAC contractor's laboratory information and SOPs for sample collection procedures are in Appendix B. See Section 3.2.6 of the IMWP for SWMU 12 Battery Dump Site for further information on characterization sampling of backfill material (Tetra Tech, 2009).

11.6.5 Sampling Requirements

- Field SOPs –Worksheet #21 and Appendix A.
- Documentation requirements – Worksheet #29.
- Analytical requirements – as discussed above
- Analytical methods – as discussed above.

References

Tetra Tech, 2001. Final Basewide Background Soil Investigation Report, Naval Surface Warfare Center Crane, Crane, Indiana. Revision 1, January.

Tetra Tech, 2009. Interim Measures Work Plan for SWMU 12 Battery Dump Site, Naval Surface Warfare Center Crane Division, Crane, Indiana. July.

U.S. EPA, 2006. Guidance on Systematic Planning Using the Data Quality Objectives Process (QA/G-4). EPA/240/B-06/001 February 2006.

SAP Worksheet #12 -- Measurement Performance Criteria Table note matrix in table entry

(UFP-QAPP Manual Section 2.6.2)

Measurement Performance Criteria Table – Field QC Samples

QC Sample	Analytical Group	Frequency	Data Quality Indicators (DQIs)	Measurement Performance Criteria	QC Sample Assesses Error for Sampling (S), Analytical (A) or Both (S&A)
Cooler Temperature Blank	All Fractions	One per cooler	Accuracy/Representativeness	Between 2 and 6°C	S&A

SAP Worksheet #13 -- Secondary Data Criteria and Limitations Table

(UFP-QAPP Manual Section 2.7)

Secondary Data	Data Source (originating organization, report title and date)	Data Generator(s) (originating organization, data types, data generation / collection dates)	How Data Will Be Used	Limitations on Data Use
RFI	*Resource Conservation and Recovery Act Facility Investigation Report for Mine Fill A* (SWMU 12) 2008	Originating Organization: Tetra Tech Data Types: Soil Sampling Data Collection Dates: August-September 2004, October-November 2005, October 2006	Used to establish excavation limits	None
IMWP	*Interim Measures Work Plan for SWMU 12 Battery Dump Site* 2009	Originating Organization: Tetra Tech Data Types: PRGs Data Collection Dates: 2008-2009	When combined with data obtained while implementing this UFP-SAP the data will be used to determine whether risk is unacceptable and hence to determine whether further excavation is required	None

SAP Worksheet #14 -- Summary of Project Tasks

(UFP-QAPP Manual Section 2.8.1)

Summary of Project Tasks

Project tasks are summarized below

Mobilization and Demobilization:

Following approval of this SAP, Tetra Tech will procure the required field subcontractors and begin mobilization activities. Mobilization will consist of the delivery of all equipment, materials, and supplies to the site, complete assembly in satisfactory working order of all such equipment at the site, and satisfactory storage at the site of all such materials and supplies. Tetra Tech will coordinate with the base to identify locations for the storage of equipment and supplies prior to mobilization.

Demobilization will consist of the prompt and timely removal of all equipment, materials, and supplies from the site following completion of the work. Demobilization includes the cleanup and removal of waste generated during the investigation.

Health and Safety Training:

Site-specific health and safety training for all Tetra Tech field staff and subcontractors will be provided as part of the mobilization activities.

Field Identification of Sample Locations:

Soil sample locations will be determined using the procedures outlined in Worksheet #17. Locations will be marked with a wooden stake or brightly colored pin flag indicating the sample location. Coordinates for each individual grab sample location will be determined using a global positioning system (GPS).

Soil Sampling, Identification and Labeling:

Soil samples will be collected in accordance with SOP-01 (Appendix A). Each composite sample collected will be identified using the nomenclature provided in SOP-02, and a pre-printed label will be affixed to both the container and a tag as stated in SOP-03 (Appendix A). All field activities will be documented in the field log book each day.

Field Quality Control Tasks:

QA/QC samples will be collected in the field to aid the data validation process (see Worksheet #20 for a summary of field QA/QC sampling identifications). QA/QC samples will be collected at the following frequencies:

- Matrix spikes (MSs) will be collected at a frequency of 1 per 20 samples. The planned sample volume is sufficient to support MS analyses.

- One temperature blank will be sent in each sample cooler to ensure that loss of mercury is minimized during shipping and storage.

- Other QA/QC samples such as duplicates, trip blanks, equipment blanks and source blanks are not considered necessary for this the project.

Worksheet #19 presents a summary of the sample analyses, container types and volumes, preservation requirements and holding times for the samples to be collected.

Sample Preservation, Packaging, and Shipping:

Sample preservation, packaging and shipping procedures are presented in Tetra Tech SOP-07 (Appendix A). The fixed-base laboratory will provide certified-clean sample containers, with preservatives added (if required) and a cooler for shipping. The cooler will be filled with ice after adding the sample containers, as described in SOP-07 (Appendix A). A chain-of-custody form will be completed as described in SOP-06 (Appendix A). The original (top) copy of the chain-of-custody form will be placed in a Ziploc bag and taped to the inside of the cooler lid. The cooler will be sealed and shipped as described in SOP-07 (Appendix A).

Field Decontamination Procedure:

Field decontamination procedures are presented in Tetra Tech SOP-04 (Appendix A). Sampling equipment (e.g., the two-inch diameter coring tool) will be decontaminated prior to and between sampling at each location.

Investigation-Derived Waste Management:

IDW expected to be generated includes disposable trowels, personal protective equipment (PPE), excess soil, and decontamination water. Disposable trowels and PPE will be disposed of in NSWC facility dumpsters. Excess soil will be returned to the off-site disposal soil piles. Liquid wastes will be collected

and disposed of following SOP-08 (Appendix A). Drums for storage of IDW will be provided by Tetra Tech. Disposal of the IDW following receipt of the analytical data shall be coordinated with NSWC Crane.

Data Handling:

After the field investigation is completed, field sampling log sheets will be organized by date and medium and filed in the project files. The field logbooks for this project will be used only for this site and will also be categorized and maintained in the project files after the completion of the field program. Project personnel completing concurrent field sampling activities may maintain multiple field logbooks. When possible, logbooks will be segregated by sampling activity. The field logbooks will be titled based on date and activity. The data handling procedures to be followed by the laboratory will meet the requirements of the laboratory technical specification. The electronic data results will be automatically downloaded into the Tetra Tech database in accordance with proprietary Tetra Tech processes. Corrections to entries made in field and laboratory logs will be made by striking through the erroneous entry with a single line and entering the correction near by with the date of correction and initials of the person making the correction.

Documentation and Records:

- Documentation of sample location coordinates, chain-of-custody forms, sample logs, field log book, and shipping documents for all samples.
- Preparation of electronic and hardcopies of the finalized SWMU 12 Battery Dump Site SAP.

Data Packages:

- Receipt of analytical data packages from the fixed-base laboratory
- Generation of Tetra Tech data validation reports

Data Review Tasks:

The fixed-base laboratory will verify that all samples listed on the chain-of-custody form are analyzed in accordance with methods specified on the chain-of-custody form, laboratory scope of work, and this SAP. Data verification and validation will be performed by Tetra Tech as described in Worksheets #35 and #36. A data validation report will be produced for each Sample Delivery Group (SDG).

All field data records and validated data will be reviewed by Tetra Tech personnel to determine the usability of the data (see Worksheet #37). The outcome of this assessment will be conveyed to the project team for agreement before the project report is finalized. Data limitations pertaining to PQOs and action limits will be identified, and corrective actions will be taken as necessary.

SAP Worksheet #15 -- Reference Limits and Evaluation Table

(UFP-QAPP Manual Section 2.8.1)

Matrix: Soil

Analytical Group: Inorganics – Metals (Fixed-Base Laboratory)

Analyte	CAS Number	Project Action Limit[1] (mg/kg)	Project Action Limit Reference	Project Quantitation Limit Goal (mg/kg)	Laboratory-Specific Limits	
					Quantitation Limit (mg/kg)	Method Detection Limit (mg/kg)
Antimony	7440-36-0	31	IMWP	10.3	3	1
Arsenic	7440-38-2	10.2	IMWP	3.4	3	0.6
Chromium	7440-47-3	26	IMWP	8.6	3	0.4
Copper	7440-50-8	28	IMWP	9.3	5	1
Iron	7439-89-6	40,800	IMWP	13,600	20	6
Lead	7439-92-1	400	IMWP	133	11	0.033
Mercury	7439-97-6	2.1	IMWP	0.7	0.3	0.1
Silver	7440-22-4	4.2	IMWP	1.4	2	0.2
Tin	7440-31-5	10	IMWP	3.3	2.5	0.5
Zinc	7440-66-6	49	IMWP	16.2	4	1

1 Surface and subsurface soil. Project Action Limits are the PRGs from the Interim Measures Work Plan for SWMU 12 Battery Dump Site, NSWC Crane.

SAP Worksheet #16 -- Project Schedule / Timeline Table (optional format)

(UFP-QAPP Manual Section 2.8.2)

Activity	Organization	Dates (MM/DD/YY)		Deliverable	Deliverable Due Date
		Anticipated Date(s) of Initiation	Anticipated Date of Completion		
Prepare Rough Draft SAP Work Plan and Appendices	Tetra Tech	June 15, 2009	July 14, 2009		
Submit Rough Draft SAP Work Plan and Appendices	Tetra Tech		July 14, 2009	Yes	July 14, 2009
Navy Review	Navy	July 14, 2009	August 4, 2009		
Prepare Draft SAP Work Plan and Appendices	Tetra Tech	August 4, 2009	August 11 2009		
Submit Draft SAP Work Plan and Appendices	Tetra Tech		August 11, 2009	Yes	August 11, 2009
Regulator Review	U.S. EPA and IDEM	August 11, 2009	August 18, 2009		
Receive Comments/Comment Resolution	Tetra Tech	August 18, 2009	August 25, 2009		
Prepare Final SAP Work Plan and Appendices	Tetra Tech	August 18, 2009	August 25, 2009		
Submit Final SAP Work Plan and Appendices	Tetra Tech		August 25, 2009	Yes	August 25, 2009
Mobilization and Field Investigation	Tetra Tech		September 28, 2009		
Complete Field Investigation and Demobilization	Tetra Tech		October 19, 2009		
Laboratory Analysis	Empirical Laboratories	September 28, 2009	October 22, 2009		
Data Validation	Tetra Tech	October 6, 2009	October 27, 2009		
Database Entry	Tetra Tech	October 6, 2009	October 30, 2009		
Prepare Rough Draft Report	Tetra Tech	October 30, 2009	November 30, 2009		

Activity	Organization	Dates (MM/DD/YY)		Deliverable	Deliverable Due Date
		Anticipated Date(s) of Initiation	Anticipated Date of Completion		
Submit Rough Draft Report	Tetra Tech		November 30, 2009	Yes	November 30, 2009
Navy Review	Navy	November 30, 2009	December 21, 2009		
Prepare Draft Report	Tetra Tech	December 21, 2009	December 31, 2009		
Submit Draft Report	Tetra Tech		December 31, 2009	Yes	December 31, 2009
Regulator Review	U.S. EPA and IDEM	December 31, 2009	January 16, 2010		
Receive Comments/Comment Resolution	Tetra Tech	January 16, 2010	January 23, 2010		
Prepare Final Report	Tetra Tech	January 17, 2010	January 23, 2010		
Submit Final Report	Tetra Tech	January, 2010	January 27, 2010	Yes	January 27. 2010

SAP Worksheet #17 -- Sampling Design and Rationale

(UFP-QAPP Manual Section 3.1.1)

17.1 VERIFICATION SAMPLING OF EXCAVATION AREAS

Figure 10-4 shows the minimum and maximum limits of excavation at the SWMU 12 Battery Dump Site. As discussed in Worksheet #11, five composite floor samples and 19 composite sidewall samples will be collected from the minimum excavation area. If further excavation is required, excavation floor samples will be collected at a rate of one composite sample for every 1,000 sf of exposed surface area, with a minimum of one verification sample collected from each depth interval and excavation sidewall samples will be collected at a rate of one composite sample for every 25 linear feet of exposed sidewall, with a minimum of one sample collected from each directionally facing sidewall. Additional samples may be collected at the request of the Navy RPM at any time. Both excavation floor and sidewall composite samples will be made up of six grab samples from the appropriate amount of exposed surface area. The locations of each grab sample will be determined in the field (see section 17.1.1). The potential (maximum) excavation limit is shown on Figure 10-4; however, the excavation has the potential to expand beyond this potential excavation limit based on the results of the verification sampling. When the concentration of the 10 COCs does not pose unacceptable human health or ecological risk, the project team will recommend no further excavation. The basis of this design is to excavate contaminated soil in a biased manner with the intention of removing as little soil as possible to meet PRGs and to ensure that risks remaining at the site upon completion of excavation are not in excess of the acceptable risk range established in Worksheet #11.

17.1.1 Selection of Grab Sample Locations

Field personnel will use Table 17-1 to randomly select each grab sample location within designated sidewalls and/or excavation floor grid. Table 17-1 presents random coordinates for composite soil sample grabs in terms of the percentage of distance from one end of a rectangular excavation to the other end for both X- and Y- directions. Figure 17-1 shows a schematic diagram of how to measure the coordinates for each of the six floor and sidewall grab samples that are to be composited from excavation floors (or sidewalls). The coordinates in Table 17-1 will be used as follows to identify the locations from which to obtain individual grab samples that will then be combined to form a composite sample:

1. Select the next sequential composite sample number in the list of composite samples in Table 17-1. The first sample selected for work conducted at the Battery Dump Site will be sample 1.

2. Collect a soil grab sample from each of the six pairs of indicated X- and Y- coordinates for the selected composite sample.

The sample numbers in Table 17-1 do not represent the sample numbers to be assigned to the composite samples, but should be viewed as index numbers used to distinguish one set of random coordinates from another. If the end of Table 17-1 is reached for a given set of coordinates (e.g., Composite Sample 20), return to the beginning of the table and continue again to the end of the table in sequential order for each additional composite sample. See Worksheet #14 and SOP-01 in Appendix A for sample collection methods. GPS coordinates will be recorded at each grab sample location.

17.1.2 XRF Field Testing

The site-specific XRF screening concentration of 370 mg/kg was computed using correlation plots of field XRF and laboratory data from previous investigations at NSWC Crane (Tetra Tech, 2009). A more conservative screening number was not used to minimize excavating clean soil material. The XRF screening number will be used to provide a margin of error in case the field data are biased high compared to laboratory data (Tetra Tech, 2009). If a sample has an XRF result that exceeds 370 mg/kg, further excavation at the sample location will be recommended. If a sample has an XRF result that is less than 370 mg/kg, the composite sample will be sent to the lab for verification. If further excavation occurs, another composite sample will be collected and field tested using XRF. Once the sample is determined to be clean using XRF, the sample will be sent to a fixed-base laboratory for final determination of remaining COC concentrations. Based on historic removal actions conducted in past years, the project team can expect a 5 business day delay between verification sample collection and availability of laboratory analytical results. See SOP-05 in Appendix A for XRF field testing procedures.

Figure 10-4 shows the locations where XRF samples will be collected along the initial excavation boundary. XRF sampling will occur at these locations because the samples located north of sample location 12SB34 within the initial excavation boundary contained concentrations of lead greater than the PRG, which makes lead a contaminant of interest in this portion of the proposed excavation. XRF samples are not being collected south of sample location 12SB34 because lead was not detected at concentrations greater than the PRG in this area of the proposed excavation and is therefore not a contaminant that can help delineate the extent of excavation.

17.2 VERIFICATION SAMPLING OF SUPPORT FACILITY AREAS

The frequency of verification samples collected from soil beneath support facilities after excavation of contaminated soil has been completed is the same as that for excavation floor sampling (one verification sample for every 1,000 sf of area disturbed). Sidewall samples are not included in the support facility verification sampling program because no excavation will occur at the support facility areas. As

discussed in Worksheet #11, based on the anticipated footprints of the support facilities, it is estimated that seven verification samples will be collected from the support facility areas (minimum of one sample from each support facility). The support facility verification samples will be analyzed for the 10 COCs listed in Worksheet #11. No XRF field testing will be completed for any support facility verification samples. In the event that a verification sample result exceeds the PRG for any of the 10 COCs, 6 inches of soil will be removed from the impacted support facility footprint (the support facility footprint equals the actual footprint plus an additional 10 feet in all directions). Following the additional excavation activities, additional verification samples will be collected. Excavation expansion will continue until all COCs are less than PRGs.

17.3 COLLECTION OF QUALITY ASSURANCE/QUALITY CONTROL SAMPLES

Quality assurance/quality control (QA/QC) samples will be collected to aid the data validation process (see Worksheet #20 for a summary of field QA/QC samples, including sampling identifications information):

- MSs will be collected at a frequency of 1 per 20 samples
- Temperature blanks will be included in each cooler to verify that sample temperatures were maintained within the acceptable range during shipping

References

Tetra Tech, 2009. Resource Conservation and Recovery Act Facility Investigation for UXO 7 Ranges, Naval Surface Warfare Center Crane Division, Crane, Indiana. July.

TABLE 17-1

VERIFICATION SAMPLE LOCATIONS
SWMU 12 UFP-SAP
NSWC CRANE
CRANE, INDIANA

Excavation Floor, Excavation Wall, and Interim Measures Support Facility Grab Samples for SWMU 12

Sample Number[1]	Grab Sample Location		Sample Number	Grab Sample Location		Sample Number	Grab Sample Location		Sample Number	Grab Sample Location	
	X %	Y %		X %	Y %		X %	Y %		X %	Y %
Composite Sample 1	92	80	Composite Sample 6	14	80	Composite Sample 11	1	78	Composite Sample 16	84	61
	78	87		48	94		79	12		8	35
	46	35		37	57		32	84		15	83
	58	62		20	60		64	67		40	68
	17	77		77	4		82	17		97	58
	51	1		38	4		79	8		83	72
Composite Sample 2	95	35	Composite Sample 7	87	65	Composite Sample 12	30	81	Composite Sample 17	37	80
	38	93		47	50		28	47		65	77
	39	56		11	57		91	26		59	81
	43	6		37	92		10	93		37	56
	40	2		23	22		44	53		94	46
	62	28		63	94		42	56		81	37
Composite Sample 3	57	68	Composite Sample 8	42	21	Composite Sample 13	33	43	Composite Sample 18	27	15
	73	45		28	64		27	67		65	12
	67	85		94	87		48	61		65	8
	61	1		80	57		42	50		46	50
	89	9		23	44		48	29		47	2
	79	1		40	81		48	24		77	53
Composite Sample 4	61	40	Composite Sample 9	46	2	Composite Sample 14	9	13	Composite Sample 19	41	38
	72	44		13	30		33	73		18	73
	15	65		57	6		46	47		12	26
	62	6		53	55		81	91		62	30
	60	68		98	64		25	70		97	64
	92	82		0	83		38	32		90	94
Composite Sample 5	79	38	Composite Sample 10	9	8	Composite Sample 15	36	66	Composite Sample 20	59	57
	78	88		55	27		31	74		82	33
	43	71		54	79		73	34		52	89
	39	11		76	78		36	21		37	50
	48	33		0	34		20	57		17	94
	72	84		23	78		4	26		65	56

1 Sample Numbers in this table do not represent the sample numbers to be assigned to the composite samples. These numbers should be viewed as index numbers used to distinguish one set of random coordinates from another.

July 2009

SAP Worksheet #18 -- Sampling Locations and Methods/SOP Requirements Table

(UFP-QAPP Manual Section 3.1.1)

Sampling Location / ID Number[1]	Matrix	Depth[2] (units)	Analytical Group[3]	Number of Samples (identify field duplicates)	Sampling SOP Reference[4]
12SOCF001A	Soil	0-6 inches	Metals	1	SOP-01, SOP-02, SOP-03, SOP-07
12SOCF002A	Soil	0-6 inches	Metals	1	SOP-01, SOP-02, SOP-03, SOP-07
12SOCF003A	Soil	0-6 inches	Metals	1	SOP-01, SOP-02, SOP-03, SOP-07
12SOCF004A	Soil	0-6 inches	Metals	1	SOP-01, SOP-02, SOP-03, SOP-07
12SOCF005A	Soil	0-6 inches	Metals	1	SOP-01, SOP-02, SOP-03, SOP-07
12SOCW001A	Soil	0-6 inches	Metals	1	SOP-01, SOP-02, SOP-03, SOP-07
12SOCW002A	Soil	0-6 inches	Metals	1	SOP-01, SOP-02, SOP-03, SOP-07
12SOCW003A	Soil	0-6 inches	Metals	1	SOP-01, SOP-02, SOP-03, SOP-07
12SOCW004A	Soil	0-6 inches	Metals	1	SOP-01, SOP-02, SOP-03, SOP-07
12SOCW005A	Soil	0-6 inches	Metals	1	SOP-01, SOP-02, SOP-03, SOP-07
12SOCW006A	Soil	0-6 inches	Metals	1	SOP-01, SOP-02, SOP-03, SOP-07
12SOCW007A	Soil	0-6 inches	Metals	1	SOP-01, SOP-02, SOP-03, SOP-07
12SOCW008A	Soil	0-6 inches	Metals	1	SOP-01, SOP-02, SOP-03, SOP-07
12SOCW009A	Soil	0-6 inches	Metals	1	SOP-01, SOP-02, SOP-03, SOP-07

Sampling Location / ID Number[1]	Matrix	Depth[2] (units)	Analytical Group[3]	Number of Samples (identify field duplicates)	Sampling SOP Reference[4]
12SOCW010A	Soil	0-6 inches	Metals	1	SOP-01, SOP-02, SOP-03, SOP-07
12SOCW011A	Soil	0-6 inches	Metals	1	SOP-01, SOP-02, SOP-03, SOP-07
12SOCW012A	Soil	0-6 inches	Metals	1	SOP-01, SOP-02, SOP-03, SOP-07
12SOCW013A	Soil	0-6 inches	Metals	1	SOP-01, SOP-02, SOP-03, SOP-07
12SOCW014A	Soil	0-6 inches	Metals	1	SOP-01, SOP-02, SOP-03, SOP-07
12SOCW015A, MS	Soil	0-6 inches	Metals	1 plus MS	SOP-01, SOP-02, SOP-03, SOP-07
12SOCW016A	Soil	0-6 inches	Metals	1	SOP-01, SOP-02, SOP-03, SOP-07
12SOCW017A	Soil	0-6 inches	Metals	1	SOP-01, SOP-02, SOP-03, SOP-07
12SOCW018A	Soil	0-6 inches	Metals	1	SOP-01, SOP-02, SOP-03, SOP-07
12SOCW019A, MS	Soil	0-6 inches	Metals	1 plus MS	SOP-01, SOP-02, SOP-03, SOP-07

1 Nomenclature only listed for composite samples.
2 Samples will be collected at 0 to 6 inches from the floor and sidewalls of the excavation.
3 Antimony, arsenic, chromium, copper, iron, lead, mercury, silver, tin, and zinc will be analyzed.
4 Standard operating procedure (SOP) or worksheet that describes the sample collection procedures.

SAP Worksheet #19 -- Analytical SOP Requirements Table

(UFP-QAPP Manual Section 3.1.1)

Matrix	**Analytical Group**	**Analytical and Preparation Method/SOP Reference**	**Containers** (number, size, and type)	**Sample Volume** (units)	**Preservation Requirements** (chemical, temperature, light protected)	**Maximum Holding Time** [1] (preparation/ analysis)
Soil	Metals	SW-846 6010B, 3050, 7471A	One 2-oz. soil jar	1 g, 0.3 g mercury	Cool to 4°C (± 2°C)	6 Months to analysis/ Mercury 28 days to analysis

1 Maximum holding time is calculated from the time the sample is collected to the time the sample is prepared/extracted.

SAP Worksheet #20 -- Field Quality Control Sample Summary Table

(UFP-QAPP Manual Section 3.1.1)

Matrix	Analytical Group	No. of Sampling Locations	No. of Field Duplicates	No. of MSs[1]	No. of Field Blanks	No. of Equip. Blanks	No. of VOA Trip Blanks	No. of PT Samples	Total No. of Samples to Lab[2]
Soil	Antimony, Arsenic, Chromium, Copper, Iron, Lead, Mercury, Silver, Tin, Zinc	24	0	2	0	0	0	0	26

1 Although the MS is not typically considered a field QC sample, it is included here because location determination is often established in the field.
2 This is the minimum total number of samples. As many as 53 samples could be sent to the laboratory.

SAP Worksheet #21 -- Project Sampling SOP References Table

(UFP-QAPP Manual Section 3.1.2)

.

Reference Number	Title, Revision Date and / or Number	Originating Organization of Sampling SOP	Equipment Type	Modified for Project Work? (Y/N)	Comments
SOP-01	Soil Sampling, July 2009	Tetra Tech	PPE, indelible marker, cooler (with ice), trowels, ziploc bags, sample containers, soil sample log forms, field logbook, chain-of-custody forms, labels	Y	Contained in Appendix A
SOP-02	Sample Identification Nomenclature, July 2009	Tetra Tech	Indelible ink pen, sample labels, tags, sample container	Y	Contained in Appendix A
SOP-03	Sample Labeling, July 2009	Tetra Tech	Pre-printed sample labels, PPE, sample containers, chain-of-custody records, sample logsheets, cooler with ice, ziploc bags	Y	Contained in Appendix A
SOP-04	Decontamination of Field Sampling Equipment, July 2009	Tetra Tech	PPE, scrub brushes, 5-gallon buckets, spray bottles, detergents, deionized (DI) water, 55-gallon drum	Y	Contained in Appendix A
SOP-05	Field-Portable X-ray Fluorescence Analysis of Soil and Sediment Samples, July 2009	Tetra Tech	XRF instrument, standards and blanks, X-ray window film, PPE, drying oven/toaster, aluminum foil/pans, Ziploc bags	Y	Contained in Appendix A

Reference Number	Title, Revision Date and / or Number	Originating Organization of Sampling SOP	Equipment Type	Modified for Project Work? (Y/N)	Comments
SOP-06	Sample Custody and Documentation of Field Activities, July 2009	Tetra Tech	Field logbook, sample labels, chain-of- custody forms, custody seals, equipment calibration logs, soil sample log sheet	Y	Contained in Appendix A
SOP-07	Sample Preservation, Packaging and Shipping, July 2009	Tetra Tech	Sample containers with preservatives (as required), packaging material, coolers, shipping labels, custody seals, chain-of-custody forms	Y	Contained in Appendix A
SOP-08	Management of Investigation-Derived Waste, July 2009	Tetra Tech	PPE, decontamination equipment, plastic sheeting/tarps, 55-gallon drum, IDW labels for drum, plastic garbage bags, wastewater container tanks	Y	Contained in Appendix A

SAP Worksheet #22 -- Field Equipment Calibration, Maintenance, Testing, and Inspection Table

(UFP-QAPP Manual Section 3.1.2.4)

Field Equipment	Activity[1]	Frequency	Acceptance Criteria	Corrective Action	Resp. Person	SOP Reference[2]	Comments
XRF	Standardization clip	Prior to daily use and after every 20 readings throughout the day	Instrument will either accept or reject the standardization.	If unacceptable, re-standardize. If still unacceptable, contact manufacturer for possible replacement.	FOL	SOP-5	
	Instrument Blank verification (silicon dioxide) to ensure there is no contamination on the analyzer window or other component that is being "seen" by the instrument	Prior to daily use and after every 20 readings throughout the day	Zero	If lead concentrations are observed, reanalyze to confirm. Contact manufacturer for possible replacement			
	Calibration verification	Prior to daily use and after every 20 readings throughout the day	20% or less for the NIST standards shipped with the instrument. Typically includes three standards - high (5,532 mg/kg), medium (1,162 mg/kg), and low (18 mg/kg) for lead	Reanalyze the standard. Contact manufacturer for possible replacement			

Field Equipment	Activity[1]	Frequency	Acceptance Criteria	Corrective Action	Resp. Person	SOP Reference[2]	Comments
GPS	Testing	Prior to daily use	Manufacturer's guidance	Operator correction or replacement	FOL	NA	Sub-meter accuracy

1 Activities may include: calibration, verification, testing, and maintenance.

2 Referenced SOPs can be found in Appendix A.

SAP Worksheet #23 -- Analytical SOP References Table

(UFP-QAPP Manual Section 3.2.1)

Lab SOP Number	Title, Revision Date, and/or Number	Definitive or Screening Data	Matrix and Analytical Group	Instrument	Organization Performing Analysis	Modified for Project Work? (Y/N)
SOP-100	Metals Digestion/Preparation Methods 3005A,3010A, 3020A, 3030, 3040A, 3050B, U.S. EPA CLP ILMO 4.1 Aqueous and Soil/Sediment, U.S. EPA Method 200.7 (Standard Methods) 3030C. Rev. 19	Definitive	Soil and Water/Metals	NA/Metals	Empirical	N
SOP-105	Metals Analysis by ICP Technique Methods 200.7, SW846 6010B, SM 19th Edition 2340B, U.S. EPA ILMO 4.1, Rev. 14	Definitive	Soil and Water/Metals	ICP	Empirical	N
SOP-103	Mercury Analysis in Water by Manual Cold Vapor Technique Methods SW846 7470A & 245.1, CLP-M 4.1, Rev. 13	Definitive	Water Mercury	Flow injection mercury analyzer	Empirical	N
SOP-104	Mercury Analysis in Soil/Sediment by Manual Cold Vapor Technique Methods SW846 7471A & 245.5, CLP-ILM 4.1, Rev. 15	Definitive	Soil Mercury	Flow injection mercury analyzer	Empirical	N
SOP-404	Laboratory Sample Receiving Log-in and Storage Standard Operating Procedures, Rev. 12	Definitive	Log-in	NA/ Log-in	Empirical	N
SOP-405	Analytical Laboratory Waste Disposal, Rev. 4	Definitive	Log-in	NA/ Log-in	Empirical	N
SOP-410	Standard Operating Procedures for Laboratory Sample Storage, Secure Areas, and Sample Custody, Rev. 6	Definitive	Log-in	NA/ Log-in	Empirical	N

SAP Worksheet #24 -- Analytical Instrument Calibration Table

(UFP-QAPP Manual Section 3.2.2)

Instrument	Calibration Procedure	Frequency of Calibration	Acceptance Criteria	Corrective Action (CA)	Person Responsible for CA	SOP Reference
Inductively Coupled Plasma (ICP) Spectrometer	Initial Calibration	At the beginning of each day or if the QC is out of criteria.	The instrument is calibrated by a one-point calibration per manufacturer's guidelines. Analytes run at their calibration levels must fall within 90-110% of true values.	Recalibrate and/or perform the necessary equipment maintenance. Check the calibration standards. Reanalyze the affected data.	Analyst/Supervisor	Empirical SOP-105
	Initial Calibration Blank (ICB)	Before beginning a sample sequence.	No analytes detected > 2x the method detection limit (MDL).	Correct the problem then reprepare and reanalyze.	Analyst/Supervisor	
	Continuing Calibration Verification (CCV)	Analyze a standard at the beginning and end of the sequence and after every 10 samples.	The acceptance criterion for the continuing calibration standard is 90-110% of true values.	Recalibrate and/or perform the necessary equipment maintenance. Check the calibration standards. Reanalyze the affected data.	Analyst/Supervisor	
	Continuing Calibration Blank (CCB)	After every 10 samples and at the end of the sequence.	No analytes detected > 2x MDL.	Correct the problem, then re-prepare and reanalyze calibration blank and previous 10 samples.	Analyst/Supervisor	
Flow Injection Mercury System	Initial Calibration	The instrument is calibrated at the beginning of each day or if the QC is out of criteria.	The calibration correlation coefficient is $\geq$0.995.	Recalibrate and/or perform the necessary equipment maintenance. Check the calibration standards. Reanalyze the affected data.	Analyst/Supervisor	Empirical SOP-103/104

Instrument	Calibration Procedure	Frequency of Calibration	Acceptance Criteria	Corrective Action (CA)	Person Responsible for CA	SOP Reference
	CCV	The CCV is analyzed at the beginning and end of the sequence and after every 10 samples.	The acceptance criteria are 80-120% recovery of the true values.	Recalibrate and/or perform the necessary equipment maintenance. Check the calibration standards. Reanalyze the affected data.	Analyst/Supervisor	

SAP Worksheet #25 -- Analytical Instrument and Equipment Maintenance, Testing, and Inspection Table

(UFP-QAPP Manual Section 3.2.3)

Instrument/ Equipment	Maintenance Activity	Testing Activity	Inspection Activity	Frequency	Acceptance Criteria	Corrective Action	Responsible Person	SOP Reference
ICP Spectrometer	Clean the torch assembly and spray chamber when they become discolored or when degradation in data quality is observed. Clean the nebulizer, and check the argon supply. Replace the peristaltic pump tubing as needed.	Metals	Inspect the torch, nebulizer chamber, pump, and tubing.	Maintenance is performed prior to initial calibration or as necessary.	The acceptance criteria for the continuing calibration standard are 90-110% of true value.	Recalibrate and/or perform the necessary equipment maintenance. Check the calibration standards. Reanalyze the affected data.	Analyst/Supervisor	Empirical SOP-105
Flow Injection Mercury System	Change the tubing and filter, clean windows, and check gas flow. Check the reagents and standards.	Mercury	Inspect the tubing, filter, and optical cell.	Maintenance is performed prior to initial calibration or as necessary.	The acceptance criteria are 80-120% of true values.	Recalibrate and/or perform the necessary equipment maintenance. Check the calibration standards. Reanalyze the affected data.	Analyst/Supervisor	Empirical SOP-103/104

SAP Worksheet #26 -- Sample Handling System

(UFP-QAPP Manual Appendix A)

SAMPLE HANDLING SYSTEM

SAMPLE COLLECTION, PACKAGING, AND SHIPMENT
Sample Collection (Personnel/Organization): TBD/Tetra Tech
Sample Packaging (Personnel/Organization): TBD/ Tetra Tech
Coordination of Shipment (Personnel/Organization): TBD/ Tetra Tech
Type of Shipment/Carrier: TBD
SAMPLE RECEIPT AND ANALYSIS
Sample Receipt (Personnel/Organization): Sample Custodians/Empirical Laboratories
Sample Custody and Storage (Personnel/Organization): Sample Custodians/Empirical Laboratories
Sample Preparation (Personnel/Organization): Metals Preparation Lab/Empirical Laboratories
Sample Determinative Analysis (Personnel/Organization): Metals Lab/ Empirical Laboratories
SAMPLE ARCHIVING
Field Sample Storage: 60 days from receipt of collection.
Sample Extract/Digestate Storage (No. of days from extraction/digestion): 3 months from sample digestion
Biological Sample Storage (No. of days from sample collection): NA
SAMPLE DISPOSAL
Personnel/Organization: Sample Custodians/ Empirical Laboratories
Number of Days from Analysis: 30 days from submittal of final report or 60 days from receipt, whichever is longer

SAP Worksheet #27 – Sample Custody Requirements Table

(UFP-QAPP Manual Section 3.3.3)

SAMPLE CUSTODY REQUIREMENTS

Field Chain of Custody

To ensure the integrity of a sample from collection through analysis, an accurate, written record that traces the possession and handling of the sample is necessary. This documentation is referred to as the chain-of-custody form. The chain of custody begins at the time of sample collection and continues until the laboratory has received the samples.

A sample is under custody if:

- It is in the sampler's possession
- It is in the sampler's view, after being in your physical possession, or
- It was in the sampler's possession and then was locked or sealed to prevent tampering, or
- It is in a secure area.

Custody documentation is designed to provide documentation of preparation, handling, storage, and shipping of all samples collected. A multi-part chain-of-custody form is used, with each page of the form signed and dated by the recipient of a sample. The person releasing the sample and the person receiving the sample each will retain a copy of the chain-of-custody form each time a sample transfer occurs.

Preservation of the integrity of the post-excavation verification samples collected will be the responsibility of identified persons from the time the samples are collected until the samples, or their derived data, are incorporated into the final report. Sample custody is described in Worksheet #27.

The FOL is responsible for the care and custody of the samples collected until they are delivered to the laboratory or are entrusted to a carrier. When transferring samples, the individuals relinquishing and receiving them will sign, date, and note the time on the chain-of-custody form. This form documents the sample custody transfer from the sampler to the laboratory, often through another person or agency (common carrier). Field chain-of-custody requirements are provided in SOP-06. Upon arrival at the laboratory, internal sample custody procedures will be followed as defined in the laboratory SOPs included in Appendix C.

Laboratory Chain of Custody

Laboratory sample custody procedures (receipt of samples, archiving, and disposal) will be used according to Empirical SOPs 404, 405, and 410. Coolers are received and checked for proper temperature. A sample cooler receipt form will be completed to note conditions and any discrepancies. The chain-of-custody form will be compared to the sample containers for correctness. Samples will be logged into the laboratory information management system (LIMS) and given a unique log number that can be tracked through processing. The Tetra Tech PM will be notified of any problems.

SAP Worksheet #28 -- Laboratory QC Samples Table

(UFP-QAPP Manual Section 3.4)

Matrix	Soil
Analytical Group	Metals
Analytical Method/ SOP Reference	SW-846 3005A, 6010B/7470A/SOP-100/103/105

QC Sample	Frequency/ Number	Method/SOP QC Acceptance Limits	Corrective Action	Person(s) Responsible for Corrective Action	Data Quality Indicator (DQI)	Measurement Performance Criteria
Method Blank	One per digestion batch of 20 or fewer samples.	Contaminants in the method blank must be less than ½ the QL.	1) Investigate the source of the contamination. Redigest and reanalyze all associated samples if the sample concentration ≥ the QL and <10x the blank concentration.	Analyst, Laboratory Supervisor and Data Validator	Bias/Contamination	Contaminants in the method blank must be less than ½ the QL.
Laboratory Control Sample (LCS)	One per digestion batch of 20 or fewer samples.	Recovery must be within ± 20% of the true value, unless vendor-supplied or statistical limits have been established.	(1) Investigate source of problem. (2) Redigest and reanalyze all associated samples.	Analyst, Laboratory Supervisor and Data Validator	Accuracy/Bias/ Contamination	Recovery must be within ± 20% of the true value, unless vendor-supplied or statistical limits have been established.

Matrix	Soil					
Duplicate Sample	One per digestion batch of 20 or fewer samples.	The relative percent difference should be within ≤20% for duplicate spikes.	Flag results	Analyst, Laboratory Supervisor and Data Validator	Precision	The relative percent difference should be within ≤20% for duplicate spikes.
Matrix Spike (MS)	One per digestion batch of 20 or fewer samples.	Recovery should be ± 25% of the true value, if sample < 4x spike added.	Flag results.	Analyst, Laboratory Supervisor and Data Validator	Accuracy/Bias	Recovery should be ± 25% of the true value, if sample < 4x spike added.
ICP Serial Dilution	One per digestion batch.	If original sample result is at least 50x the instrument detection limit, five-fold dilution must agree within ± 10% of the original result.	Flag result or dilute and reanalyze sample to eliminate interference.	Analyst, Laboratory Supervisor and Data Validator	Accuracy/Bias	If original sample result is at least 50x the instrument detection limit, five-fold dilution must agree within ± 10% of the original result.

SAP Worksheet #29 -- Project Documents and Records Table

(UFP-QAPP Manual Section 3.5.1)

Document	Where Maintained
Sample Collection Documents and Records Field logbook (and sampling notes) Field sample forms (e.g., boring logs, sample log sheets, drilling logs, etc.) COC records Sample shipment airbills Equipment calibration logs Photographs Field Task Modification Forms SAP Field Sampling SOPs	Tetra Tech project file, results will be discussed in subject document.
Laboratory Documents and Records Sample receipt/log-in form Sample storage records Sample preparation logs Standard traceability logs Equipment Calibration logs Sample analysis run logs Equipment maintenance, testing, and inspection logs Field Task Modification Reports Reported field sample results Reported results for standards, quality control checks, and quality control samples Data completeness checklists Sample storage and disposal records Telephone logs Extraction/clean-up records Raw data Data Assessment Documents and Records Field Sampling Audit Checklist (if an audit is conducted) Analytical Audit Checklist (if an audit is conducted) Data Validation Memoranda	Tetra Tech Project File, Long-term data package storage at third-party professional document storage firm (BRM), results will be discussed in subject document. Tetra Tech project file, results will be discussed in subject document.

SAP Worksheet #30 -- Analytical Services Table

(UFP-QAPP Manual Section 3.5.2.3)

Matrix	**Analytical Group**	**Sample Locations/ID Numbers**	**Analytical Method**	**Data Package Turnaround Time**	**Laboratory/Organization** (name and address, contact person and telephone number)	**Backup Laboratory/Organization** (name and address, contact person and telephone number)
Soil quality control samples	Metals	See Worksheet #18	SW-846 6010B /7470A	3 calendar days	Empirical Laboratories 227 French Landing Drive Suite 550 Nashville, TN 37228 Janice Shilling (615)-345-1115	NA

SAP Worksheet #31 -- Planned Project Assessments Table

(UFP-QAPP Manual Section 4.1.1)

Assessment Type	Frequency	Internal or External	Organization Performing Assessment	Person(s) Responsible for Performing Assessment (title and organizational affiliation)	Person(s) Responsible for Responding to Assessment Findings (title and organizational affiliation)	Person(s) Responsible for Identifying and Implementing Corrective Actions (CA) (title and organizational affiliation)	Person(s) Responsible for Monitoring Effectiveness of CA (title and organizational affiliation)
Field Supervision	Daily during sampling events	Internal	Tetra Tech	Tetra Tech FOL	Tetra Tech FOL	Tetra Tech FOL and field crew	Tetra Tech FOL, PM, and QAM
Project Supervision	Every sampling event	Internal	Tetra Tech	Tetra Tech PM	Tetra Tech FOL	Tetra Tech PM and FOL	Tetra Tech PM and FOL
Laboratory Systems Audit[1]	One per contract year	Internal	Tetra Tech	Person assigned by Tetra Tech QAM	Tetra Tech PM and FOL	Tetra Tech Auditor and PM	Tetra Tech QAM
Laboratory System Audit	Every 18 months	External	Naval Facilities Engineering Service Center (NFESC)	NFESC	Laboratory QAM or Laboratory Manager	Laboratory QAM or Laboratory Manager	NFESC

1 Empirical has successfully completed the laboratory evaluation process required as part of the NFESC Quality Assurance Program and as described in the Department of Defense Quality Systems Manual. The NFESC certification letter is included in Appendix C.

SAP Worksheet #32 -- Assessment Findings and Corrective Action Responses

(UFP-QAPP Manual Section 4.1.2)

Assessment Type	Nature of Deficiencies Documentation	Individual(s) Notified of Findings (name, title, organization)	Timeframe of Notification	Nature of Corrective Action Response Documentation	Individual(s) Receiving Corrective Action Response (name, title, organization)	Timeframe for Response
Laboratory System Audit	Written audit report	Randy Ward, QAM, Empirical Laboratories	Not specified by NFESC	Letter	NFESC	Specified by NFESC

1 Audits are scheduled at the Tetra Tech program level and may or may not include this project.

SAP Worksheet #33 -- QA Management Reports Table

(UFP QAPP Manual Section 4.2)

Type of Report	**Frequency** (daily, weekly monthly, quarterly, annually, etc.)	**Projected Delivery Date(s)**	**Person(s) Responsible for Report Preparation** (title and organizational affiliation)	**Report Recipient(s)** (title and organizational affiliation)
Data validation report	Per SDG	Completion of data validation	Tetra Tech DVM or designee	Tetra Tech PM, project file
Major analysis problem identification (internal memo)	When persistent analysis problems are detected	Immediately	Tetra Tech QAM	Tetra Tech PM, QAM, Program Manager, and project file
Project monthly progress report	Monthly for duration of project	Monthly	Tetra Tech PM	DoN, project file
Field progress report	Daily, oral, during the course of sampling	Every day that field sampling is occurring	Tetra Tech FOL	Tetra Tech PM
Laboratory QA report	When significant plan deviations result from unanticipated circumstances	Immediately	Lab PM	Tetra Tech PM, project file
Audit report	In conjunction with audits	After completion of audits (usually 3 weeks)	Tetra Tech DVM or designee	Tetra Tech PM, project file

SAP Worksheet #34 -- Verification (Step I) Process Table

(UFP-QAPP Manual Section 5.2.1)

Verification Input	Description	Internal / External	Responsible for Verification (name, organization)
Chain-of-custody forms	The Tetra Tech FOL or designee will review and sign the chain-of-custody form to verify that all samples listed are included in the shipment to the laboratory and that the sample information is accurate. The forms will be signed by the sampler and a copy will be retained for the project file, PM, and data validators. See SOP SA-6.3	Internal	Sampler and FOL, Tetra Tech
SAP sample tables	Verify that all proposed samples listed in the SAP tables have been collected.	Internal	FOL or designee, Tetra Tech
Sample log sheets	Verify that information recorded on the log sheets is accurate and complete.	Internal	FOL or designee, Tetra Tech
Sample coordinates	Verify that sample locations are correct and in accordance with the SAP proposed locations.	Internal	FOL or designee, Tetra Tech
Field QC samples	Check that field QC samples listed in Worksheet #20 were collected as required.	Internal	FOL or designee, Tetra Tech
Chain-of-custody forms	The laboratory sample custodian will review the sample shipment for completeness, and integrity, and will sign accepting the shipment. The data validators will check that the chain-of-custody form was signed/dated by the Tetra Tech FOL or designee relinquishing the samples and also by the laboratory sample custodian receiving the samples for analyses.	Internal/ External	1 - Laboratory sample custodian 2 -Data validators, Tetra Tech
Analytical data package	All analytical data packages will be verified internally for completeness by the laboratory performing the work. The laboratory QAM will sign the case narrative for each data package.	Internal	Randy Ward, Empirical Laboratories QAM
Analytical data package	The data package will be verified for completeness by Tetra Tech data validators. Missing information will be requested from the laboratory, and validation will be suspended until missing data are received.	External	Data validators, Tetra Tech
Analytical data package and Electronic data deliverables	The electronic data will be verified against the chain-of-custody form and hard copy data package for accuracy and completeness. Laboratory analytical results will be verified and compared to the electronic analytical results for accuracy. Sample results will be evaluated for laboratory contamination and will be qualified for false positives using the laboratory method/preparation blank summaries. Positive results reported between the method detection limit and reporting limit will be qualified as estimated. Extraneous laboratory qualifiers will be removed from the validation qualifier.	External	Data validators, Tetra Tech

SAP Worksheet #35 -- Validation (Steps IIa and IIb) Process Table

(UFP-QAPP Manual Section 5.2.2) (Figure 37 UFP-QAPP Manual) (Table 9 UFP-QAPP Manual)

Step IIa / IIb	Validation Input	Description	Responsible for Validation (name, organization)
IIa	Field SOPs/Field Logs/Sample Collection Logs	Ensure that all sampling SOPs were followed. Verify that deviations have been documented and measurement performance criteria (MPCs) have been achieved. Particular attention will be given to verify that samples were correctly identified, that sampling location coordinates are accurate, and that documentation establishes an unbroken trail of documented chain of custody from sample collection to report generation. Verify that the correct sampling and analytical methods/SOPs were applied. Verify that the sampling plan was implemented and carried out as written and that any deviations are documented.	PM, FOL, or designee, Tetra Tech
IIa	Analytical SOPs	Ensure that all laboratory SOPs were followed. Verify that the correct analytical methods/SOPs were applied.	Randy Ward, QAM, Empirical Laboratories
IIa	Documentation of Method QC Results	Establish that all method QC samples were analyzed and in control as listed in the analytical SOPs. If method QA is not in control, the laboratory will contact Tetra Tech for guidance prior to report preparation.	Randy Ward, QAM, Empirical Laboratories
IIa	Chain-of-custody Forms	Ensure that the custody and integrity of the samples were maintained from collection to analysis and that custody records are complete and any deviations are recorded.	Project chemist or data validators, Tetra Tech
IIa	Holding Times	Review that the samples were shipped and store at the required temperature listed in Worksheet #19. Ensure that the analyses were performed within the holding times listed in Worksheet #19	Project Chemist or data validators, Tetra Tech
IIa/IIb	Laboratory Data Results for Accuracy	Ensure that the laboratory QC samples listed in Worksheet #28 were analyzed and that the MPCs listed in Worksheet #12 were met for all field samples and QC analyses. Check that specified field QC samples were collected and analyzed and that the analytical QC criteria set up for this project were met.	Project Chemist or data validators, Tetra Tech

Step IIa / IIb	Validation Input	Description	Responsible for Validation (name, organization)
IIa/IIb	Field and Laboratory Duplicate Analyses for Precision	Check field sampling precision by calculating the relative percent difference (RPD) for field duplicate samples. Check the laboratory precision by reviewing the RPD or percent difference values from laboratory duplicate analyses, matrix spike, and laboratory control sample/laboratory control sample duplicate. Ensure compliance with the methods and project MPCs accuracy goals listed in Worksheets #12	Project Chemist or data validators, Tetra Tech
IIa/IIb	Sample Results for Representativeness	Check that the laboratory recorded the temperature at sample receipt and the pH of chemically preserved samples to ensure sample integrity from sample collection to analysis	Project Chemist or data validators, Tetra Tech
IIa/IIb	Project Action Limits (PALs)	Discuss the impact on matrix interferences or sample dilutions performed because of the high concentration of one or more contaminant on the other target compounds reported as not-detected. Document this usability issue and inform the PM.	Project Chemist or data validators, Tetra Tech
IIa/IIb	Data Validation Report	Summarize deviations from methods, procedures, or contracts. Qualify data results based on method or QC deviation and explain all the data qualifications. Print a copy of the project database qualified data depicting data qualifiers and data qualifiers codes that summarize the reason for data qualifications. Determine if the data met the MPCs and determine the impact of any deviations on the technical usability of the data.	Project Chemist or data validators, Tetra Tech
IIa, IIb	SAP QC Sample Documentation	Ensure that all QC samples specified in the SAP were collected and analyzed and that the associated results were within prescribed SAP acceptance limits. Ensure that QC samples and standards prescribed in analytical SOPs were analyzed and within the prescribed control limits. If any significant QC deviations occur, the laboratory shall have contacted the Tetra Tech PM.	PM or designee, Tetra Tech

Step IIa / IIb	Validation Input	Description	Responsible for Validation (name, organization)
IIa, IIb	Documentation of Analytical Reports for Completeness	Review the chain-of-custody form generated in the field to ensure that the required analytical samples have been collected, appropriate sample identifications have been used, and correct analytical methods have been applied. Validator will verify that elements of the data package required for validation are present, and if not, the laboratory will be contacted and the missing information will be requested. Validation will be performed as per Worksheet #36. Check that all data have been transferred correctly and completely to the final Structured Query Language (SQL) database.	Project Chemist or data validators, Tetra Tech
IIa/IIb	PALs	Review and add PALs to the laboratory electronic data deliverable. Flag samples and notify PM of samples that exceed PALs as listed on Worksheet #15.	PM or designee, Tetra Tech
IIb	Project QLs for sensitivity	Ensure that the project quantitation limits listed in Worksheet #15 were achieved.	Project Chemist or data validators, Tetra Tech
IIb	Analytical Data Deviations	Determine the impact of any deviation from sampling or analytical methods and SOPs requirements and matrix interferences effect on the analytical results.	Project Chemist or data validators, Tetra Tech

1 IIa=compliance with methods, procedures, and contracts (see Table 10, page 117, UFP-QAPP manual, V.1, March 2005).
IIb=comparison with measurement performance criteria in the SAP (see Table 11, page 118, UFP-QAPP manual, V.1, March 2005).

SAP Worksheet #36 –Analytical Data Validation (Steps IIa and IIb) Summary Table

(UFP-QAPP Manual Section 5.2.2.1)

Step IIa / IIb	Matrix	Analytical Group	Validation Criteria	Data Validator (title and organizational affiliation)
IIa and IIb	Soil verification samples	Metals	100 percent full data validation will be performed. SW-846 6010B/7470A method-specific criteria and those listed in Worksheet #12, #15, #24, and #28. If not included in these worksheets, the logic outlined in U.S. EPA Contract Laboratory Program National Functional Guidelines for Inorganic Data Review U.S. EPA-540-R-04-004, October 2004, will be used to apply qualifiers to data.	Data Validators, Tetra Tech

SAP Worksheet #37 -- Usability Assessment

(UFP-QAPP Manual Section 5.2.3)

Data Usability Assessment

The usability of the data directly affects whether project objectives can be achieved. The following characteristics will be evaluated at a minimum. The results of these evaluations will be included in the project report. The characteristics will be evaluated for multiple concentration levels if the evaluator determines that this is necessary. To the extent required by the type of data being reviewed, the assessor will consult with other technically competent individuals to render sound technical assessments of these data characteristics:

Completeness

- For each matrix that was scheduled to be sampled, the FOL acting on behalf of the project team will prepare a table listing planned samples/analyses to collected samples/analyses. If deviations from the scheduled sample collection or analyses are identified the Tetra Tech PM and risk assessor will determine whether the deviations compromise the ability to meet project objectives. If they do, the Tetra Tech PM will consult with the Navy RPM and other project team members, as necessary (determined by the Navy RPM), to develop appropriate corrective actions.

Precision

- The Project Chemist acting on behalf of the project team will determine whether precision goals for field duplicates and laboratory duplicates were met. This will be accomplished by comparing duplicate results to precision goals identified in Worksheets #12 and #28. This will also include a comparison of field and laboratory precision with the expectation that field duplicate results will be no less precise than laboratory duplicate results. If the goals are not met, or data have been flagged as estimated (J qualifier), limitations on the use of the data will be described in the project report.

Accuracy

- The Project Chemist acting on behalf of the project team will determine whether the accuracy/bias goals were met for project data. This will be accomplished by comparing percent recoveries of LCS, Laboratory Control Sample Duplicate (LCSD), and MS to accuracy goals identified in Worksheet #28. This assessment will include an evaluation of field and laboratory contamination; instrument calibration variability; and analyte recoveries for surrogates, MSs, and LCSs. If the goals are not met, limitations on the use of the data will be described in the project report. Bias of the qualified results and a description of the impact of identified non-compliances on a specific data package or on the overall project data will be described in the project report.

Representativeness

- A project scientist identified by the Tetra Tech PM and acting on behalf of the project team will determine whether the data are adequately representative of intended populations, both spatially and temporally. This will be accomplished by verifying that samples were collected and processed for analysis in accordance with this SAP, by reviewing spatial and temporal data variations, and by comparing these characteristics to expectations. The usability report will describe the representativeness of the data for each matrix and analytical fraction. This will not require quantitative comparisons unless professional judgment of the project scientist indicates that a quantitative analysis is required.

Comparability

- The Project Chemist acting on behalf of the project team will determine whether the data generated under this project are sufficiently comparable to historical site data generated by different methods and for samples collected using different procedures and under different site conditions. This will be accomplished by comparing overall precision and bias among data sets for each matrix and analytical fraction. This will not require quantitative comparisons unless professional judgment of the Project Chemist indicates that such quantitative analysis is required.

Data Usability Assessment

Sensitivity

- The Project Chemist acting on behalf of the project team will determine whether the project sensitivity goals listed in Worksheet #15 are achieved. If sensitivity goals are not achieved, the limitations on the data will be described. The Project Chemist will enlist the help of the project risk assessor to evaluate deviations from planned sensitivity goals.

Field XRF/Laboratory Lead Data Correlation

- A correlation will not be made between field XRF and laboratory metal concentrations. The field XRF data will be used only for guiding real-time excavation and will not be validated or reviewed for adequacy because field XRF screening data will ultimately be supplanted by laboratory data.

Project Assumptions and Data Outliers

- The Tetra Tech PM and designated team members will evaluate whether project assumptions are valid. This will typically be a qualitative evaluation but may be supported by quantitative evaluations. The type of evaluation depends on the assumption being tested. Quantitative assumptions include assumptions related to data distributions (e.g., normal or log-normal) and estimates of data variability.

Describe the evaluative procedures used to assess overall measurement error associated with the project:

After completion of the data validation, the data and data quality will be reviewed to determine whether sufficient data of acceptable quality are available for decision making. In addition to the evaluations described above, a series of inspections and statistical analyses will be performed to estimate these characteristics. The statistical evaluations will include simple summary statistics for target analytes, such as maximum concentration, minimum concentration, number of samples with non-detected results, number of samples with detected results, and proportion of samples with detected and non-detected results. The project team members identified by the PM will assess whether the data collectively support the attainment of project objectives. They will consider whether any missing or rejected data have compromised the ability to make decisions or to make the decisions with the desired level of confidence. The data will be evaluated to determine whether missing or rejected data can be compensated by other data. Although rejected data will generally not be used, there may be reason to use them in a weight-of-evidence argument, especially when they supplement data that have not been rejected. If rejected data are used, their use will be supported by technically defensible rationales.

For statistical comparisons and mathematical manipulations, non-detected values will be represented by a concentration equal to one-half the sample-specific reporting limit.

Identify the personnel responsible for performing the usability assessment:

The Tetra Tech PM, Project Chemist, FOL, and project scientist will be responsible for conducting the listed data usability assessments. The data usability assessment will be reviewed with the Navy RPM, the U.S. EPA RPM, and the IDEM PM. If deficiencies affecting the attainment of project objectives are identified, the review will take place either in a face-to-face meeting or a teleconference, depending on the extent of identified deficiencies. If no significant deficiencies are identified, the data usability assessment will simply be documented in the project report and reviewed during the normal document review cycle.

Describe the documentation that will be generated during usability assessment and how usability assessment results will be presented so that they identify trends, relationships (correlations), and anomalies:

The data will be presented in tabular format, including data qualifications such as estimation (J, UJ) or rejection (R). Written documentation will support the non-compliance estimated or rejected data results. The project report will identify and describe the data usability limitations and suggest re-sampling or other corrective actions, if necessary.

P:\GIS\CRANE_NSWC\MAPDOCS\MXD\SWMU12_BASE_SITE_LOCATION.MXD 7/1/09 KM

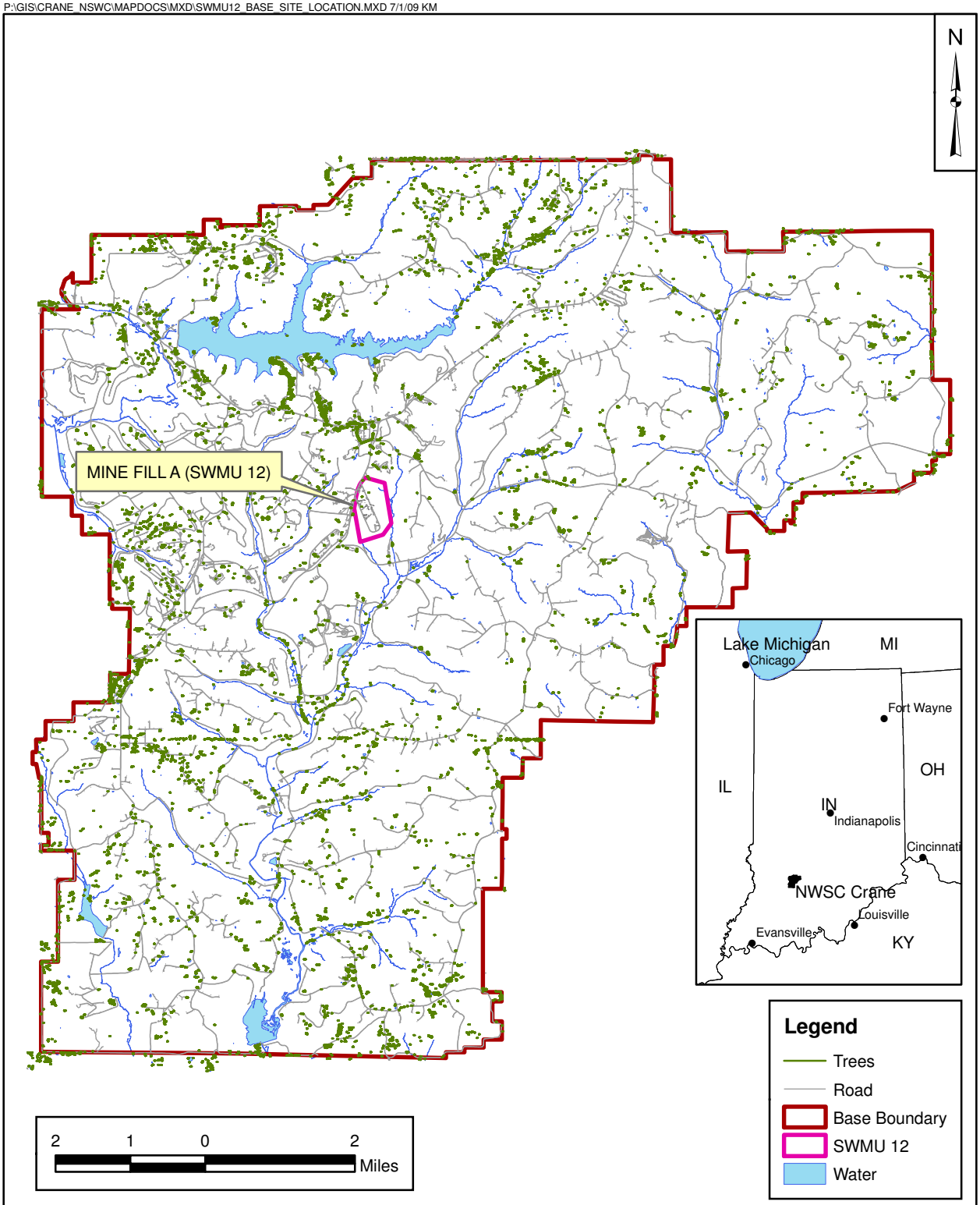

DRAWN BY K. MOORE	DATE 7/8/08	Tetra Tech NUS, Inc.	CONTRACT NUMBER 271
CHECKED BY B. COLLINS	DATE 7/1/09	BASE AND SITE LOCATION MAP SWMU 12 - BATTERY SITE SAMPLING AND ANALYSIS PLAN NSWC CRANE CRANE, INDIANA	APPROVED BY ___ DATE ___
REVISED BY ___	DATE ___		APPROVED BY ___ DATE ___
SCALE AS NOTED			FIGURE NO. FIGURE 10-1 REV 0

P:\GIS\CRANE_NSWC\MAPDOCS\MXD\SWMU12_SITE_LAYOUT.MXD 17/1/09 KM

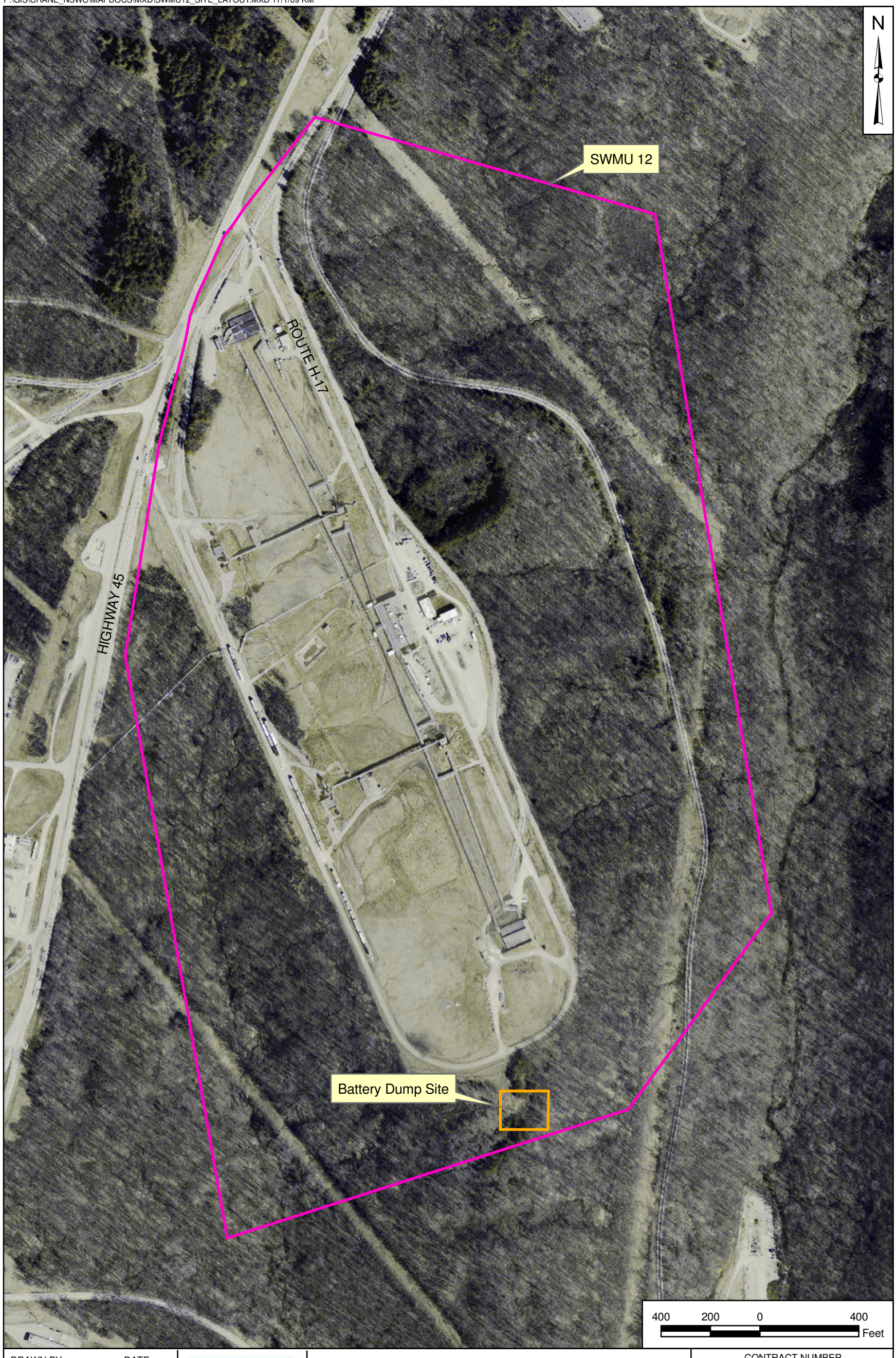

DRAWN BY	DATE
K. MOORE	12/12/08
CHECKED BY	DATE
B. COLLINS	7/1/09
REVISED BY	DATE
—	—
SCALE	
AS NOTED	

NAVFAC

SITE LAYOUT - 2005 AERIAL PHOTOGRAPH
SWMU 12 - BATTERY DUMP SITE
SAMPLING AND ANALYSIS PLAN
NSWC CRANE
CRANE, INDIANA

CONTRACT NUMBER	
00352	
APPROVED BY	DATE
___	___
APPROVED BY	DATE
___	___
FIGURE NO.	REV
FIGURE 10-2	0

P:\GIS\CRANE_NSWC\MAPDOCS\MXD\SWMU12_BATTERY_SITE.MXD 7/1/09 KM

DRAWN BY	DATE
K. MOORE	06/25/08
CHECKED BY	DATE
B. COLLINS	7/1/09
REVISED BY	DATE
S. STROZ	03/05/09
SCALE	
AS NOTED	

NAVFAC

BATTERY SITE LAYOUT - 2005 AERIAL PHOTOGRAPH
SWMU 12 - BATTERY DUMP SITE
SAMPLING AND ANALYSIS PLAN
NSWC CRANE
CRANE, INDIANA

CONTRACT NUMBER	
CTO 0271	
APPROVED BY	DATE
___	___
APPROVED BY	DATE
___	___
FIGURE NO.	REV
FIGURE 10-3	0

P:\GIS\CRANE_NSWC\MAPDOCS\APR\SWMU12_TAGS.APR REVISED 2 LIMITS OF EXCAVATION LAYOUT 8/24/09 SS

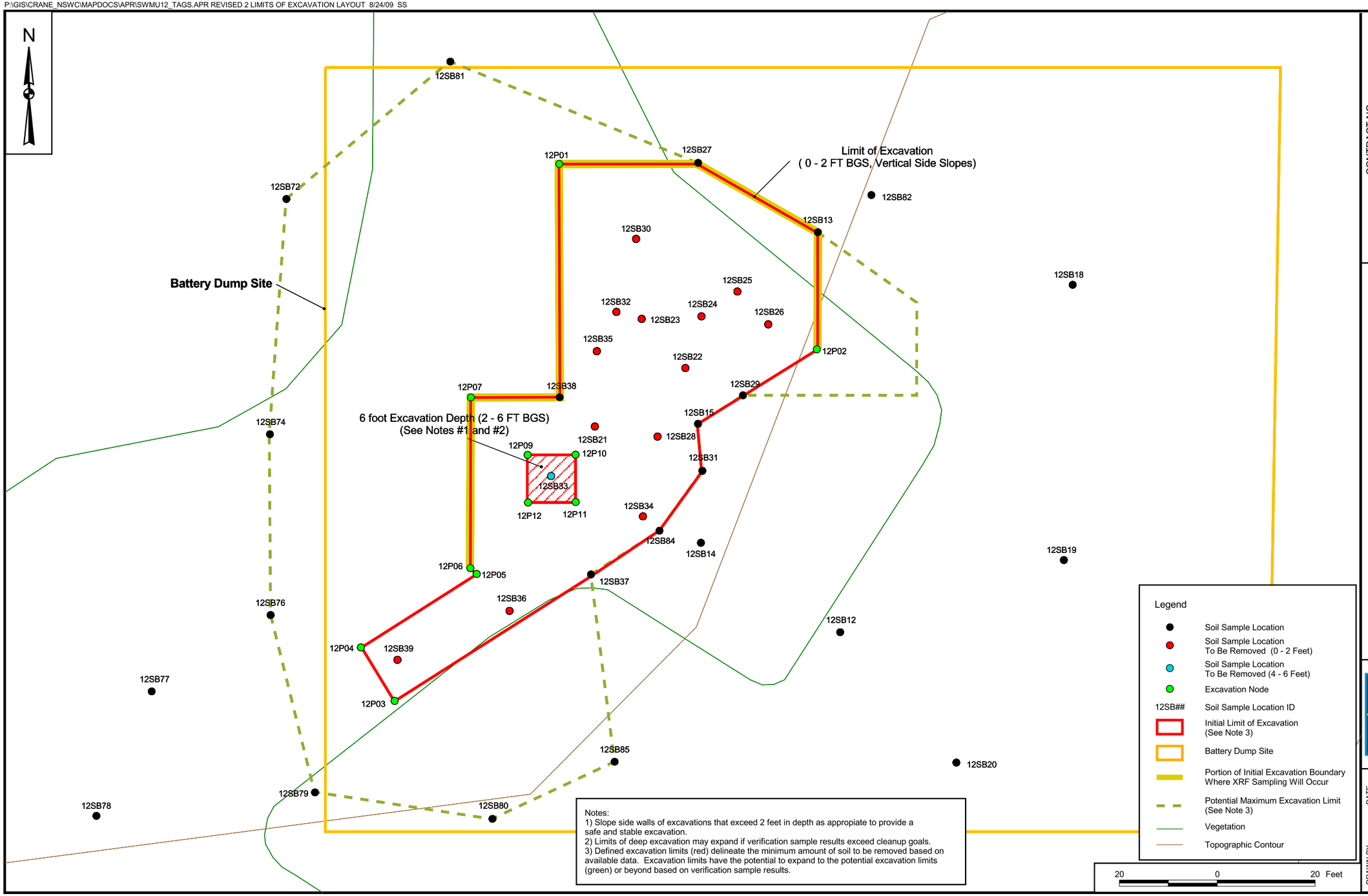

Notes:
1) Slope side walls of excavations that exceed 2 feet in depth as appropiate to provide a safe and stable excavation.
2) Limits of deep excavation may expand if verification sample results exceed cleanup goals.
3) Defined excavation limits (red) delineate the minimum amount of soil to be removed based on available data. Excavation limits have the potential to expand to the potential excavation limits (green) or beyond based on verification sample results.

CONTRACT NO.
CTO F271

APPROVED BY ___ DATE ___

APPROVED BY ___ DATE ___

DRAWING NO. FIGURE 10-4

REV 0

LIMITS OF EXCAVATION
AND LOCATION OF INITIAL XRF SAMPLING
SWMU 12 - BATTERY DUMP SITE
INTERIM MEASURES WORK PLAN
NSA CRANE
CRANE, INDIANA

DRAWN BY S. STROZ DATE 3/31/09

CHECKED BY B. COLLINS DATE 8/24/09

COST/SCHED-AREA

SCALE AS NOTED

ACAD:1573CP01.dwg 08/24/09 CK PIT

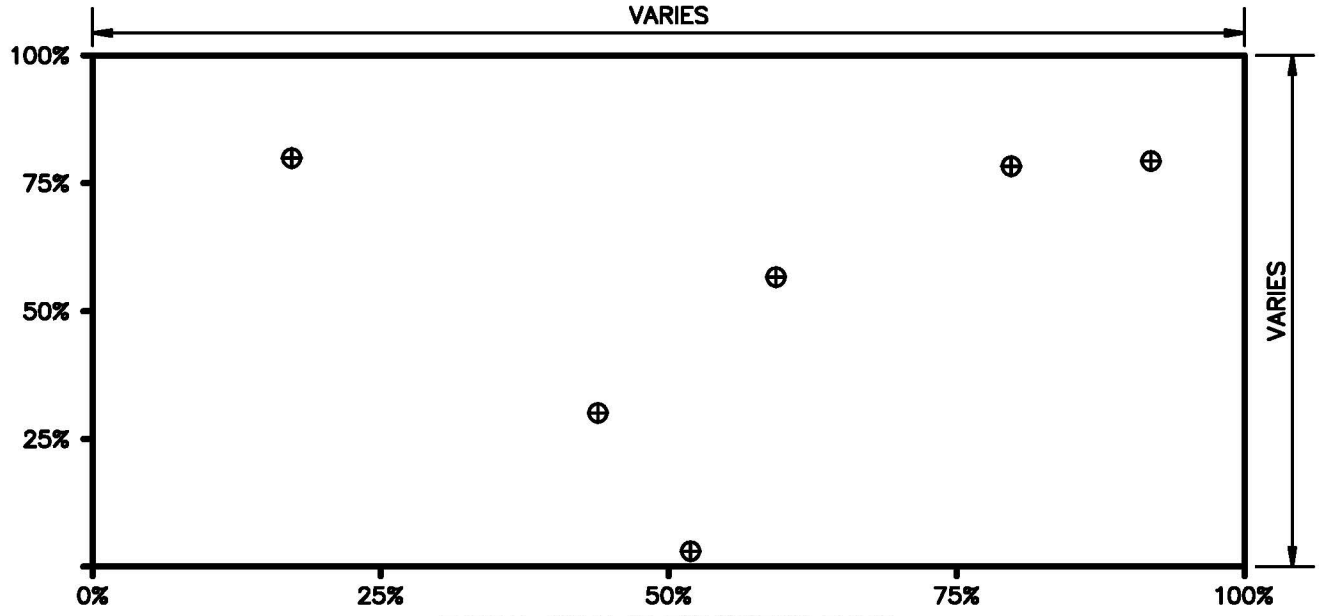

TYPICAL SWMU 12 EXCAVATION FLOOR
LOCATION REPRESENTS COMPOSITE SAMPLE 1, ON TABLE 17.1 IN WORKSHEET 17

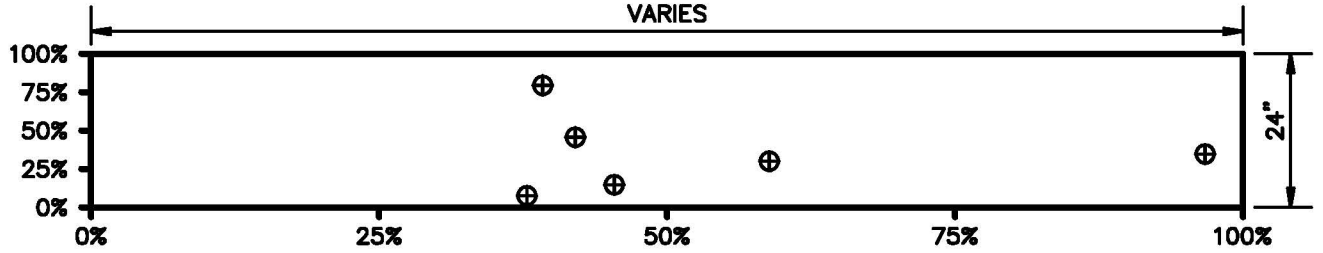

TYPICAL SWMU 12 EXCAVATION SIDEWALL
LOCATION REPRESENTS COMPOSITE SAMPLE 2, ON TABLE 17.1 IN WORKSHEET 17

LEGEND:

⊕ ALIQUOT SAMPLE LOCATION

0% PERCENT DISTANCE ALONG EXPOSED SURFACE

DRAWN BY CK	DATE 8/24/09
CHECKED BY	DATE
REVISED BY	DATE
SCALE NONE	

NAVFAC

SWMU 12 EXCAVATION
SAMPLE LOCATIONS EXAMPLE
UFP – SAP
NSWC CRANE
CRANE, INDIANA

CONTRACT NO. 0467	
OWNER NO.	
APPROVED BY	DATE
DRAWING NO. FIGURE 17–1	REV. 0

FORM CADD NO. SDIV–AH.DWG – REV 1 – 9/10/98

APPENDIX A

STANDARD OPERATING PROCEDURES

SOP-01

SOIL SAMPLING

STANDARD OPERATING PROCEDURE

SOP-01

SOIL SAMPLING

1.0 PURPOSE

This Standard Operating Procedure (SOP) establishes the procedure for collecting surface soil samples using the hand auger technique to support verification sampling at SWMU 12.

2.0 REQUIRED FIELD FORMS AND EQUIPMENT

The following field forms and equipment are required for soil sampling.

- Disposable medical-grade gloves (e.g., latex, nitrile)
- Indelible marker
- Ziploc bags
- Shipping containers (containing ice)
- Stainless steel two inch diameter coring tools
- Stainless steel hand trowel or disposable trowels
- Stainless steel mixing bowls
- Sample containers: Sample containers are certified clean by the laboratory supplying the containers.
- The following field forms:
  - Soil Sample Log Forms.
  - Field Logbook.
  - Chain-of-Custody Form.
- Pre-printed sample labels (2 per sample)

3.0 SAMPLING PROCEDURES

Stainless steel two inch diameter coring tools will be employed to collect soil samples. The sampler will wear clean, disposable, medical-grade gloves.

3.1 Clear the area to be sampled of any surface debris (herbaceous vegetation, twigs, rocks, litter, etc.).

3.2 Use the stainless steel two inch diameter coring tool to collect six equal-volume grab samples no more than 6 inches below the surface. If the soil is very hard, a stainless steel or disposable hand trowel may be used to break up the soil, but six equal-volume grab samples must still be collected.

3.3 To form the composite samples, place each of the six equal-volume grab samples in the same Ziploc bag, labeled with the composite sample number shown in SOP-02. Homogenize the composite sample in the laboratory on base in a decontaminated stainless steel mixing bowl. After the sample has been homogenized, place a portion of the soil sample into laboratory supplied sampling container, print, and affix electronically printed label.

3.4 For samples that are to be submitted for laboratory analysis place the labeled sample container and a labeled tag into a plastic storage bag and then place the plastic storage bag holding the sample container into a cooler containing ice.

3.5 Complete required information on the Soil Sample Log Sheet (copy attached at the end of this SOP). Note the location of each aliquot in the "OBSERVATIONS/NOTES" section of the Soil and Sediment Sample Log Sheet.

4.0 ATTACHMENTS

1. Soil and Sediment Sample Log Sheet

ATTACHMENT 1

SOIL AND SEDIMENT SAMPLE LOG SHEET

SOIL & SEDIMENT SAMPLE LOG SHEET

Page___ of ___

Project Site Name: _____
Project No.: _____

[] Surface Soil
[] Subsurface Soil
[] Sediment
[] Other: _____
[] QA Sample Type: _____

Sample ID No.: _____
Sample Location: _____
Sampled By: _____
C.O.C. No.: _____

Type of Sample:
[] Low Concentration
[] High Concentration

GRAB SAMPLE DATA:

Date:	Depth Interval	Color	Description (Sand, Silt, Clay, Moisture, etc.)
Time:			
Method:			
Monitor Reading (ppm):			

COMPOSITE SAMPLE DATA:

Date:	Time	Depth Interval	Color	Description (Sand, Silt, Clay, Moisture, etc.)
Method:				
Monitor Readings				
(Range in ppm):				

SAMPLE COLLECTION INFORMATION:

Analysis	Container Requirements	Collected	Other

OBSERVATIONS / NOTES:

MAP:

Circle If Applicable:

MS/MSD	Duplicate ID No.:

Signature(s):

SOP-02

SAMPLE IDENTIFICATION NOMENCLATURE

STANDARD OPERATING PROCEDURE

SOP-02

SAMPLE IDENTIFICATION NOMENCLATURE

1.0 PURPOSE

The purpose of this Standard Operating Procedure (SOP) is to establish a consistent sample nomenclature system that will facilitate subsequent data management at the Naval Surface Warfare Center (NSWC) SWMU 12 Battery Dump site. The sample nomenclature system has been devised such that the following objectives can be attained.

- Sorting of data by site, location, or matrix
- Maintenance of consistency (field, laboratory, and database sample numbers)
- Accommodation of all project-specific requirements
- Accommodation of laboratory sample number length constraints
- Ease of sample identification

The NSWC Crane Environmental Protection Department must approve any deviations from this procedure.

2.0 REQUIRED FIELD FORMS AND EQUIPMENT

- **Pen with indelible ink**
- **Pre-printed sample container labels (2 per sample)**
- **Tags (1 per sample) to attach one pre-printed sample container label**
- **Lab provided sample container (1 per sample)**

3.0 SAMPLE IDENTIFICATION NOMENCLATURE

3.1 Verification Samples

All verification samples will be properly labeled with a sample label affixed to the sample container. Each sample will be assigned a unique sample tracking number.

3.1.1 Verification Sample numbering Scheme

The sample tracking number will consist of a four- or five-segment alpha-numeric code that identifies the sample's associated solid waste management unit (SWMU), sample type, location, and step-out sample number.

The alphanumeric coding to be used is explained in the following diagram and subsequent definitions:

NN	AA	A	A	NNN	A	A
SWMU Number	Matrix	Composite or Grab Sample	Wall or Floor Sample	Sample Location Number	If a grab sample, indicate which grab sample	Step-out sample number

Character Type:

A = Alpha

N = Numeric

SWMU Number (NN):

12 = SWMU 12

Matrix Code (AA):

SO = Soil Sample

Composite or Grab Sample (A):

C=Composite

G=Grab

Wall or Floor Sample (A):

W=Wall

F=Floor

Sample Location Number (NNN):

Sequential number beginning with "001" for each matrix.

Grab Sample Number (A):

Individual aliquots (grabs) used to form composite samples will be designated "A", "B", "C", "D", "etc.". Each of the aliquots for a given sample will be recorded in the field log. The number of aliquots combined to form a composite and the locations of the aliquots within the sampled area must be recorded in the "OBSERVATONS/NOTES" section of the Soil and Sediment Sample Log Sheet.

Step-out Sample Number (A):

If the sample is the first sample taken at a particular location, the step-out sample number is “A”. If there has already been a sample collected at this location for this particular project (sample came back dirty and there was more soil excavated), the step-out sample number is “B”.

3.1.2 Examples of Verification Sample Nomenclature

The first composite wall soil sample collected from SWMU 12, sampling location 001, would be labeled as “12SOCW001A”. The individual aliquots making up the composite sample should be noted on the sample log sheet as “12SOGW001AA, 12SOGW001BA, 12SOGW001CA”, etc. sheet.

3.3 Field Quality Assurance/Quality Control (QA/QC) Sample Nomenclature

Field QA/QC samples will be designated using a different coding system than the one used for regular field samples.

3.3.1 QC Sample Numbering

The QC code will consist of a three- to four-segment alpha-numeric code that identifies the sample QC type, the date the sample was collected, and the number of this type of QC sample collected on that date.

AA	NNNNNN	NN
QC Type	Date	Sequence Number (per day)

The QC types are identified as:

TB = Trip Blank
FD = Field Duplicate

The sampling time recorded on the chain-of-custody form and labels for duplicate samples will be 0000 so that the samples are "blind" to the laboratory. Notes detailing the sample number, time, date, and type will be recorded on the sample log sheets and will document the location of the duplicate sample (sample log sheets are not provided to the laboratory).

3.3.2 Examples of Field QA/QC Sample Nomenclature

The first duplicate of the day at SWMU 12 for a soil sample collected on August 24, 2009 would be designated as 12FD08240901.

The third duplicate of the day taken at SWMU 12 of a soil sample collected on August 27, 2009 would be designated as 12FD08270903.

The first trip blank associated with samples collected on August 30, 2009 would be designated as TB08300901.

SOP-03

LABELLING

STANDARD OPERATING PROCEDURE

SOP-03

SAMPLE LABELING

1.0 PURPOSE

This Standard Operating Procedure (SOP) describes the procedures to be used for labeling sample containers. Sample labels are used to document the sample ID, date, time, analysis to be performed, preservative, matrix, sampler, and the analytical laboratory. A sample label will be attached to each sample container. The label for each container will contain identical information.

2.0 REQUIRED FIELD FORMS AND EQUIPMENT

- **Writing utensil**
- **Disposable medical-grade gloves (e.g. latex, nitrile)**
- **Sample logsheets**
- **Required sample containers: All sample containers for analysis by fix-based laboratories will be supplied and deemed certified clean by the laboratory.**
- **PREPRINTED SAMPLE LABELS (2 PER SAMPLE)**
- **TAGS**
- **Chain-of-custody records**
- **Ziploc bags**
- **Heavy-duty cooler**
- **Ice**

3.0 PROCEDURES

3.1 The following information will be electronically printed on each sample label prior to field activities.

- Project name (SWMU 12 Battery Dump site)
- Project number (CTO F271)
- Project location (NSWC Crane)

3.2 The following information will be written on each sample label after sample collection

- Sample ID Number
- Preservative
- Analysis to be performed
- Matrix type
- Laboratory name
- Date and Time
- Sampled By

3.2 Fill in appropriate information on the Sample Collection Log Form.

3.3 Select the containers that are appropriate for a given sample. Affix the pre-printed sample label and to the sample container.

3.4 Fill the appropriate containers with sample material. Securely close the container lids without overtightening.

3.5 Check to determine if the information printed on the label is correct.

3.6 Affix an identical pre-printed sample label to a tag (with all information filled in).

3.6 Place the sample container and tag in a Ziploc plastic bag and place in a cooler containing ice.

Example of a sample label is attached at the end of this SOP.

4.0 ATTACHMENTS

1. Sample Label

ATTACHMENT 1

SAMPLE LABEL

Tetra Tech NUS, Inc. 661 Andersen Drive Pittsburgh, 15220 (412)921-7090	**Project:** **Location:** **CTO:**	
Sample No:		**Matrix:**
Date:	**Time:**	**Preserve:**
Analysis:		
Sampled by:	**Laboratory**	

SOP-04

DECONTAMINATION OF FIELD SAMPLING EQUIPMENT

STANDARD OPERATING PROCEDURE
SOP-04

DECONTAMINATION OF FIELD SAMPLING EQUIPMENT

1.0 PURPOSE

This Standard Operating Procedure (SOP) establishes the procedures to be followed when decontaminating non-dedicated field sampling equipment during the field investigations at the NSWC Crane facility.

2.0 REQUIRED FIELD FORMS AND EQUIPMENT

- Waterproof pens
- Non-latex rubber or plastic gloves
- Cotton gloves
- Field logbook
- Potable water
- Deionized water
- LiquiNox detergent
- Brushes, spray bottles, paper towels, etc.
- 55-gallon drum or other container to collect and transport decontamination fluids

3.0 DECONTAMINATION PROCEDURES

3.1 Don non-latex and/or cotton gloves and decontaminate sampling equipment (in accordance with the following steps) prior to field sampling and between samples.

3.2 Rinse the equipment with potable water. Rinsing may be conducted by spraying with water from a spray bottle or by dipping. Collect the potable water rinsate into a container.

3.3 Wash the equipment with a solution of LiquiNox detergent. Prepare the LiquiNox wash solution in accordance with the instructions on the LiquiNox container. Collect the LiquiNox wash solution into a container. Use brushes or sprays as appropriate for the equipment. If oily residue has

accumulated on the sampling equipment, remove the residue with an isopropanol wash and repeat the Liquinox wash.

3.4 Rinse the equipment with potable water. Rinsing may be conducted by spraying with water from a spray bottle or by dipping. Collect the potable water rinsate into a container.

3.5 Rinse the equipment with deionized water. Rinsing may be conducted by spraying with water from a spray bottle or by dipping. Collect the deionized water rinsate into a container.

3.6 Remove excess water by air drying, shaking, or by wiping with paper towels as necessary.

3.7 Document decontamination by recording it in the field logbook.

3.8 Containerized decontamination solutions will be managed in accordance with the procedures described in SOP-08 in the Sampling and Analysis plan for the SWMU 12 Battery Dump site.

SOP-05

FIELD PORTABLE X-RAY FLUORESCENCE ANALYSIS OF SOIL AND SEDIMENT SAMPLES

STANDARD OPERATING PROCEDURE
SOP-05

FIELD PORTABLE X-RAY FLUORESCENCE ANALYSIS OF SOIL AND SEDIMENT SAMPLES

1.0 PURPOSE

This procedure is for the semiquantitative analysis of metallic lead particles and chemical compounds of lead in soil using a field portable x-ray fluorescence (FPXRF) spectrometer. This procedure is based on the United States Environmental Protection Agency (USEPA)-approved XRF field screening method for elemental analysis (Method 6200). Use of the Innov-X alpha series XRF is planned for this site investigation.

2.0 SCOPE, APPLICATION, AND LIMITATIONS

2.1 Scope of Procedure

Analysis of any other elements beside lead using FPXRF may require changes to this Standard Operating Procedure (SOP), and are therefore outside the scope of this SOP.

Although it is possible to use FPXRF to measure analytes in situ, this SOP requires removal of a soil sample from its native environment prior to analysis. By removing, drying, and homogenizing the sample prior to analysis, more precise and accurate results are obtained.

2.2 Analyst Training

Use of this method is restricted to personnel both trained and knowledgeable in the operation of the Innov-X alpha series XRF instrument or under the supervision of a trained and knowledgeable individual. Proper training for the safe operation of the instrument should be completed by the analyst prior to analysis. This training may be obtained directly from INNOV-X, an INNOV-X instrument distributor or lessor, or another trained Tetra Tech person.

3.0 ACRONYMS AND ABBREVIATIONS

FPXRF: Field portable x-ray fluorescence.
mg/kg: milligrams per kilogram.
MDL: Method detection limit.
PQL: Practical quantitation limit.
QC: Quality control.
RPD: Relative percent difference.
USGS: United States Geological Survey.
XRF: X-ray fluorescence.

4.0 RESPONSIBILITIES

Analyst/Chemist - Responsible for all aspects of sample preparation and analysis including equipment maintenance. Also responsible for maintaining chain-of-custody of samples after receipt from sampling personnel.

5.0 PROCEDURES

5.1 Safety

5.1.1 Radiation Safety

Radiation safety practices for the INNOV-X instrument can be found in the operator's manual. Protective shielding should never be removed by the analyst or any personnel other than the manufacturer.

An additional hazard present with x-ray tubes is the danger of electric shock from the high voltage supply. The danger of electric shock is as substantial as the danger from radiation but is often overlooked because of its familiarity.

5.1.2 Protective Equipment

Analysts must wear disposable plastic gloves whenever sample aliquots are being transferred from one vessel to another. Consult the health and safety plan for other protection requirements.

5.2 Apparatus and Materials

Apparatus and materials consist of the following:

INNOV-X Alpha Series FPXRF spectrometer with data processing unit (iPAQ) pocket personnel computer):

INNOV-X Alpha Series XRF instrument manual to match the INNOV-X Alpha Series instrument.

Aluminum drying pans or aluminum foil: Sized suitably to hold as much as 50 grams of sample and fit into the drying oven.

Calibration verification check sample: A National Institute of Standards and Technology (NIST) or other Standard reference material (SRM) that contains lead in a concentration range that is compatible with the project objectives to verify the accuracy of the instrument. SRMs can be obtained from the NIST, the U.S. Geological Survey (USGS), the Canadian National Research Council, and the national bureau of standards in foreign nations. Pertinent NIST SRMs for FPXRF analysis include 2704, Buffalo River Sediment; 2709, San Joaquin Soil; and 2710 and 2711, Montana Soil. These SRMs contain soil or sediment from actual sites that has been analyzed using independent inorganic analytical methods by many different laboratories. Acceptable limits for SRM percent recoveries are usually provided with the SRM. In their absence, a limit of ± 30 percent will be used as a guideline.

Instrument Blank: May be silicon dioxide, a Teflon block, a quartz block, "clean" sand, or lithium carbonate.

Lead calibration check standard: Supplied by the FPXRF manufacturer.

Method blank material for performing method blank checks: May be lead-free silica sand or lithium carbonate that undergoes the same preparation procedure as the samples.

Battery charger.

Polyethylene sample cups: 31 millimeters (mm) to 40 mm in diameter with collar, or equivalent (appropriate for FPXRF instrument).

X-ray window film: Mylar™, Kapton™, Spectrolene™, polypropylene, or equivalent; 2.5 to 6.0 micrometers (µm) thick.

Sample containers: glass or plastic to store samples.

Sieves: 60-mesh Stainless steel, Nylon, or equivalent for preparing soil and sediment samples if necessary.

Trowels: for collecting soil samples.

Plastic bags: used for collection and homogenization of soil samples. May also be used as sample presentation device.

Drying oven: standard convection or toaster oven, for soil samples that require drying.

Rolling pin (optional): Wooden rolling pin for crushing samples.

5.3 Sample Collection, Preservation, and Handling

Samples shall be provided to the FPXRF analyst in plastic bags. The analyst is responsible for maintaining chain-of-custody of all samples until all analyses have been successfully completed. No sample preservation is necessary. All samples shall be handled in accordance with sample handling SOPs in effect for the field event.

5.4 Preventive Maintenance

Refer to the instrument manual for specific manufacturer's recommendations.

5.5 Instrument Start-Up

5.5.1 Ensure the pocket PC (iPAQ) is plugged into the FPXRF instrument body and install a fully charged battery into the instrument.

5.5.2 Press the ON/OFF button on the base of the pistol grip of the instrument. If the iPAQ does not automatically power up, press the Power button in the to right corner of the iPAQ.

5.5.3 Tap the Microsoft icon at the upper left corner of the iPAQ.

5.5.4 Chose START.

5.5.5 Tap "Soil Mode" on the menu or choose Mode (bottom of screen) and then choose Soil Mode from the drop down menu.

5.5.6 Allow the instrument to warm up (approximately 3 minutes).

5.5.7 Release the manual trigger lock.

5.5.8 Standardize the instrument in accordance with Section 5.6.

5.6 Standardization/Calibration Check

It is not possible to start an analysis if the instrument has not been standardized. To verify proper calibration of the instrument it is necessary to periodically standardize it using the automated standardization procedure. This must be done anytime the instrument is restarted and every 4 hours of operation, although re-standardization may be done at any other time (e.g., when instrument drift is suspected).

5.6.1 Click the standardization piece (supplied with the instrument) on the front of the instrument, verifying that the solid portion of the standard completely covers the analysis window.

5.6.2 Select "Tap here to Standardize" or select *File* → *Standardize*. The red light on top of the instrument will blink indicating that the instrument is producing x-rays and the shutter is open. The amber light on the rear of the instrument will also be illuminated and a status bar will appear to display the progress of the standardization.

5.6.3 Upon successful standardization the message "Successful Standardization" will appear along with the instrument resolution. In this case tap "ok" to dismiss the completion message. If problems are encountered, either follow the prompts that appear and/or repeat the standardization. Contact the FOL if problems persist. Take note of any error messages that appear as they may be useful if the instrument manufacturer must be contacted. Additional assistance is also available in the manufacturer's instrument manual.

5.7 Quality Control

The quality control (QC) program includes analysis of blanks calibration verification checks, duplicate analyses, and field duplicate samples. For all the above areas, any identified problems and corrective action must be documented in the instrument run log, analysis narrative report, and instrument maintenance log or standards log (as applicable). Identical operating conditions will be used for each sample.

5.7.1 Laboratory Blanks

Two types of blank samples shall be analyzed for FPXRF analysis: instrument blanks and method blanks.

5.7.1.1 At the beginning of each day, at the end of each day, and after every 20th sample or when potential contamination of the instrument is suspected, analyze an instrument blank to verify that no contamination exists in the spectrometer or on the probe window.

If the lead concentration in the blank exceeds the method detection limit (MDL), see Section 5.9.3) check the probe window and other potentially contaminated instrument components for contamination. If contamination is not causing the elevated blank readings, restandardize the instrument according to manufacturer's instructions.

5.7.1.2 After every 20th sample analyze a method blank. If the method blank lead concentration exceeds the practical quantitation limit (PQL, see Section 5.9.4), identify the cause of the elevated lead concentration and reanalyze all samples since the last acceptable method blank.

5.7.2 Calibration Verification Checks

5.7.2.1 After performing each blank check (Section 5.7.2), analyze a calibration verification check sample to check the accuracy of the instrument and to assess the stability and consistency of the analysis for the analytes of interest.

5.7.2.2 If the measured lead percent recovery (See Section 5.9.1) is less than 60 percent or greater than 135 percent, reanalyze the check sample. If the value continues to fall outside this acceptance range, the instrument should be restandardized according to the manufacture instructions and the batch of samples analyzed before the unacceptable calibration verification check must be reanalyzed.

5.7.3 XRF Duplicate Samples

XRF duplicate samples are two portions of the same sample that have been prepared and homogenized together, and then split and analyzed in the same manner by the XRF analyst.

5.7.3.1 Analyze an XRF duplicate at a frequency of 1 per 20 or once per day, whichever is more frequent.

5.7.3.2 If the computed RPD (See Section 5.9.2) exceeds 50 percent reanalyze both samples. If the RPD again exceeds 50 percent RPD consider whether the high degree of imprecision is caused by sample heterogeneity or other causes. This assessment may be aided by repeating the analysis of a sample that was analyzed previously. If the observed imprecision is attributed to sample heterogeneity, increase the number of readings made per sample to try to limit the imprecision and repeat the analyses. If this does not correct the problem notify the FOL.

5.8 Sample Analysis

Note:

This section provides sample analysis instructions, assuming that appropriate instrument start-up and calibration checks have been completed. The longer the instrument count time, the lower the detection limits and the less uncertainty there is with a recorded result. Count time is user-selectable through the instrument's software. Because the XRF data will be used in a screening capacity to make preliminary decisions concerning the soil concentrations relative to 400 mg/kg, it is not necessary to obtain a high degree of accuracy or precision with the instrument. Therefore, count times should be limited to less than 60 seconds unless an usually high degree of precision is expected. To change the count time, select Options → Setup Testing and enter the same value (in seconds) to minimum and maximum count times.

Note:

Section 5.7 identifies the appropriate frequencies for conducting various QC sample analyses and the associated acceptance limits and corrective actions for potentially unsuitable conditions. The specified QC analysis frequencies are minimum frequencies. More frequent QC sample analyses are permitted, especially when diagnosing quality problems.

5.8.1 Ensure that calibration checks and blanks have been analyzed according to Sections 5.6, 5.7.1, and 5.7.2. Count times shall be at least 30 seconds but generally less than 60 seconds.

5.8.2 Acquire enough soil sample to fill an 8-ounce jar and separate from it all particles greater than the size of a pea.

5.8.3 Homogenize the remaining finer grained portion of the sample by simple mixing until it appears as uniform in texture and composition as practicable. Mixing may be done in a beaker or other suitable lead-free container. If the sample is moist and has high clay content, it may be kneaded in a plastic bag. Mixing shall continue for at least two minutes to ensure that the sample is well mixed. To aid mixing, the sample may be placed into a thick-walled (3 mil or thicker) gallon-sized freezer bag (e.g., ZipLoc®) and rolled flat with a rolling pin to break up large chunks of dirt.

5.8.4 Place approximately 20 to 50 grams (one U.S. nickel weighs about 5 grams) in a suitable container (e.g., aluminum drying pan) for drying.

5.8.5 Dry the homogenized sample from Step 5.8.4 for approximately 20 to 30 minutes in the oven at a temperature not greater than 150°C (a setting of approximately 300°F). If the sample is not visibly dry after this initial drying time, place the sample back into the oven until the sample is dry.

5.8.6 Re-homogenize the dried sample aliquot in a beaker or other suitable lead-free container to obtain a well mixed soil sample. Mixing shall continue for at least one minute.

5.8.7 Place a portion (approximately 1.5 cubic inches) of the dried, homogenized sample aliquot into the instrument manufacturer's recommended sample cup (e.g., a 31.0-mm polyethylene sample cup (or equivalent) or place it in a thin-walled (1.0 mil or thinner) plastic sandwich bag (e.g., ZipLoc®).

5.8.8 If using a disposable plastic sample cup, ensure the cup is at least three-quarters full and cover with mylar (or other) film per the manufacturer's recommendations.

5.8.9 Present the sample to the instrument in Soil Mode.

5.8.10 Perform a single pull of the trigger to start the count. The count time shall be the same as was used for the calibrations, calibration checks, and blank analyses. The message "Test in progress" will appear on the instrument and the red light on top of the instrument and will illuminate.

5.8.11 When the predetermined count period has expired the message "Test complete" will appear on the instrument. A slight delay may also be incurred during which time the message "calculating" may appear to indicate that results are being computed.

5.8.12 Record the displayed results for lead concentration in mg/kg and the associated error on Figure 1.

CAUTION

Inconsistent positioning of samples in front of the probe window is a potential source of error because the x-ray signal decreases by the square of the distance from the radioactive source. This error is minimized by maintaining the same distance between the window and each sample. For the best results, the window of the probe should be in direct contact with the sample, which means that the sample surface should be flat and smooth to provide a good contact surface.

5.8.13 Remix the sample in the plastic bag (or rotate the sample cup approximately one-third of a turn) then acquire another measurement by repeating Steps 5.8.10 and 5.8.11. Record the result and associated error on Figure 1.

5.8.14 Repeat Steps 5.8.10 and 5.8.11. Record the result and associated error on Figure 1 (XRF Field Form).

5.8.15 Based on the degree of precision demonstrated by the three individual measurements, determine whether additional readings should be acquired on the sample. This determination shall be based on professional judgment of the FPXRF analyst and shall consider the degree of precision observed during calibration checks and previous sample analyses. The objective will be to ensure that the average reading reported for each sample is representative of the true sample concentration. If the analyst feels that non-representative readings are being obtained the analyst shall correct the analytical system or notify the FOL prior to continuing with analyses.

5.8.16 Ensure that measured results are reported to the following standards

- Results < 1000 mg/kg (or parts per million) are reported to two significant figures and results > 1000 mg/Kg are reported to three significant figures.
- All values < MDL shall be reported as the MDL and flagged with the letter “U”.
- All values > MDL and < PQL shall be reported as is and flagged with the letter “B”.

5.9 Calculations

5.9.1 Percent Recovery: The equation for determining percent recovery of calibration verification check standards and standard reference materials is:

$$\%R = \frac{\text{Experimental Concentration}}{\text{Certified or Known Concentration}} \text{ X } 100\,\%$$

5.9.2 Relative Percent Difference: The equation for determining relative percent difference for laboratory and field duplicate samples is:

$$\text{RPD} = \frac{\left|\text{Amount in Sample 1} - \text{Amount in Sample 2}\right|}{0.5\,(\text{Amount in Sample 1} + \text{Amount in Sample 2})} \text{ X } 100\,\%$$

5.9.3 Method Detection Limit (MDL): Because the analyses governed by this SOP are semi-quantitative, the manufacturer-specified detection limit will be reported as the MDL unless the specified detection limit is less than 20 mg/kg. Care will taken to ensure that the appropriate count time is consistent with the reported detection limit. However, no value less than 20 mg/kg will be reported as an MDL.

5.9.4 Practical Quantitation Limit (PQL): Multiply the MDL by 3 to obtain the PQL: PQL = MDL*3

6.0 REFERENCES

Innov-X Systems, Inc. Innov-X Systems X-Ray Fluorescence Spectrometers Instruction Manual. Woburn, MA. June 2002.

Stephen Shefsky, NITON Corporation. Comparing Field Portable X-Ray Fluorescence (XRF) To Laboratory Analysis of Heavy Metals In Soil. Presented at the International Symposium of Field Screening Methods for Hazardous Wastes and Toxic Chemicals. Las Vegas, Nevada. January 29-31, 1997.

USEPA (U.S. Environmental Protection Agency), Method 6200: Field Portable X-Ray Fluorescence Spectrometry for the Determination of Elemental Concentrations in Soil and Sediment, Office of Solid Waste, Washington, D.C. January 1998.

USEPA, Region I, Northeast Waste Management Officials' Association (NEWMOA) Technology Review Committee Advisory Opinion. Innovative Technology: X-Ray Fluorescence Field Analysis. September 21, 1999.

FIGURE 1

FIELD PORTABLE XRF SAMPLE ANALYSIS LOG SHEET

Page___ of ___

Project Site Name: ______________________ Run Length/Duration: ______________________

Project No.: ______________________ Measurement Units: ______________________

Analyzed By: ______________________ Reference/Calibration: ______________________

SAMPLING AND FIELD PORTABLE XRF RESULTS DATA:

SAMPLE ID	ANALYSIS DATE	ANALYSIS TIME	ELEMENT ANALYSIS	RESULT RUN 1	RESULT RUN 2	RESULT RUN 3	RESULTS AVERAGE	ERROR RUN 1	ERROR RUN 2	ERROR RUN 3	ERROR AVERAGE

SOP-06

SAMPLE CUSTODY AND DOCUMENTATION OF FIELD ACTIVITIES

STANDARD OPERATING PROCEDURE
SOP-06

SAMPLE CUSTODY AND DOCUMENTATION OF FIELD ACTIVITIES

1.0 PURPOSE

This Standard Operating Procedure (SOP) establishes the procedures for sample custody and documentation of field sampling and field analyses activities.

2.0 REQUIRED FIELD FORMS AND EQUIPMENT

The following logbooks, forms, and labels are required.

- Field logbook
- Sample labels
- chain-of-custody form
- Custody seals
- Equipment Calibration Log
- Soil Sample Log Sheet

3.0 PROCEDURES

This section describes custody and documentation procedures. All entries made into the logbooks, custody documents, logs, and log sheets described in this SOP must be made in indelible ink (black is preferred). No erasures are permitted. If an incorrect entry is made, the entry will be crossed out with a single strike mark, initialed, and dated. Note: In lieu of the above logs, electronic documentation may be used to store data.

3.1 Field Logbook

The field logbook is a hard-bound, paginated, controlled-distribution record book in which all major on-site activities are documented. At a minimum, the following activities and events will be recorded (daily) in the site logbook:

- All field personnel present
- Arrival/departure of site visitors
- Arrival/departure of equipment
- Start or completion of sampling activities
- Daily on-site activities performed each day
- Sample pickup information
- Health and safety issues
- Weather conditions

The field logbook is initiated at the start of the first on-site activity (e.g., site visit or initial reconnaissance survey). Entries are to be made for every day that on-site activities take place.

The following information must be recorded on the cover of each site logbook:

- Project name
- Project number
- Book number
- Start date
- End date

Information recorded daily in the site logbook need not be duplicated in other field notebooks but must summarize the contents of these other notebooks and refer to specific page locations in these notebooks for detailed information (where applicable). At the completion of each day's entries, the site logbook must be signed and dated by the field operations leader (FOL).

3.2 Sample Labels

Adhesive sample container labels must be completed and applied to every sample container. Information on the label includes the project name, location, sample number, date, time, preservative, analysis, matrix, sampler's initials, and the name of the laboratory performing the analysis.

3.3 Chain-of-Custody Form

The chain-of-custody form is a multi-part form that is initiated as samples are acquired and accompanies a sample (or group of samples) as it is transferred from person to person. Each chain-of-custody is numbered. This form must accompany any samples collected for laboratory chemical analysis. A copy of a blank chain-of-custody form is attached at the end of this SOP.

The FOL or must include the name of the laboratory in the "Remarks" section to ensure that the samples are forwarded to the correct location. If more than one chain-of-custody is necessary for any cooler, the FOL will indicate "Page __ of __" on each chain-of-custody. The original (top) signed copy of the chain-of-custody will be placed inside a large Ziploc-type bag and taped inside the lid of the shipping cooler. Once the samples are received at the laboratory, the sample custodian checks the contents of the cooler(s) against the enclosed chain-of-custody. Any problems are noted on the enclosed chain-of-custody Form (bottle breakage, discrepancies between the sample labels, chain-of-custody form, etc.) and will be resolved through communication between the laboratory point-of-contact and the Project Manager (PM). The chain-of-custody form is signed and retained by the laboratory and becomes part of the sample's corresponding analytical data package.

3.4 Custody Seal

The custody seal is an adhesive-backed label with a number on each seal. It is part of the chain-of-custody process and is used to prevent tampering with samples after they have been collected in the field and sealed in coolers for transit to the laboratory. The custody seals are signed and dated by the samplers and affixed across the opening edges of each cooler (two seals per cooler) containing environmental samples. The laboratory sample custodian will examine the custody seal for evidence of tampering and will notify the Tetra Tech PM if evidence of tampering is observed.

3.5 Equipment Calibration Log

The Equipment Calibration Log is used to document calibration of measuring equipment used in the field. The Equipment Calibration Log documents that the manufacturer's instructions were followed for calibration of the equipment, including frequency and type of standard or calibration device. An Equipment Calibration Log must be maintained for each electronic measuring device requiring calibration. Entries must be made for each day the equipment is used.

3.6 Soil and Sample Log Sheet

The Soil Sample Log Sheets are used to document the sampling of soils (see SOP-01 in the SAP for the SWMU 12 Battery Dump Site).

4.0 ATTACHMENTS

1. Chain-of-custody form

ATTACHMENT 1

CHAIN-OF-CUSTODY RECORD

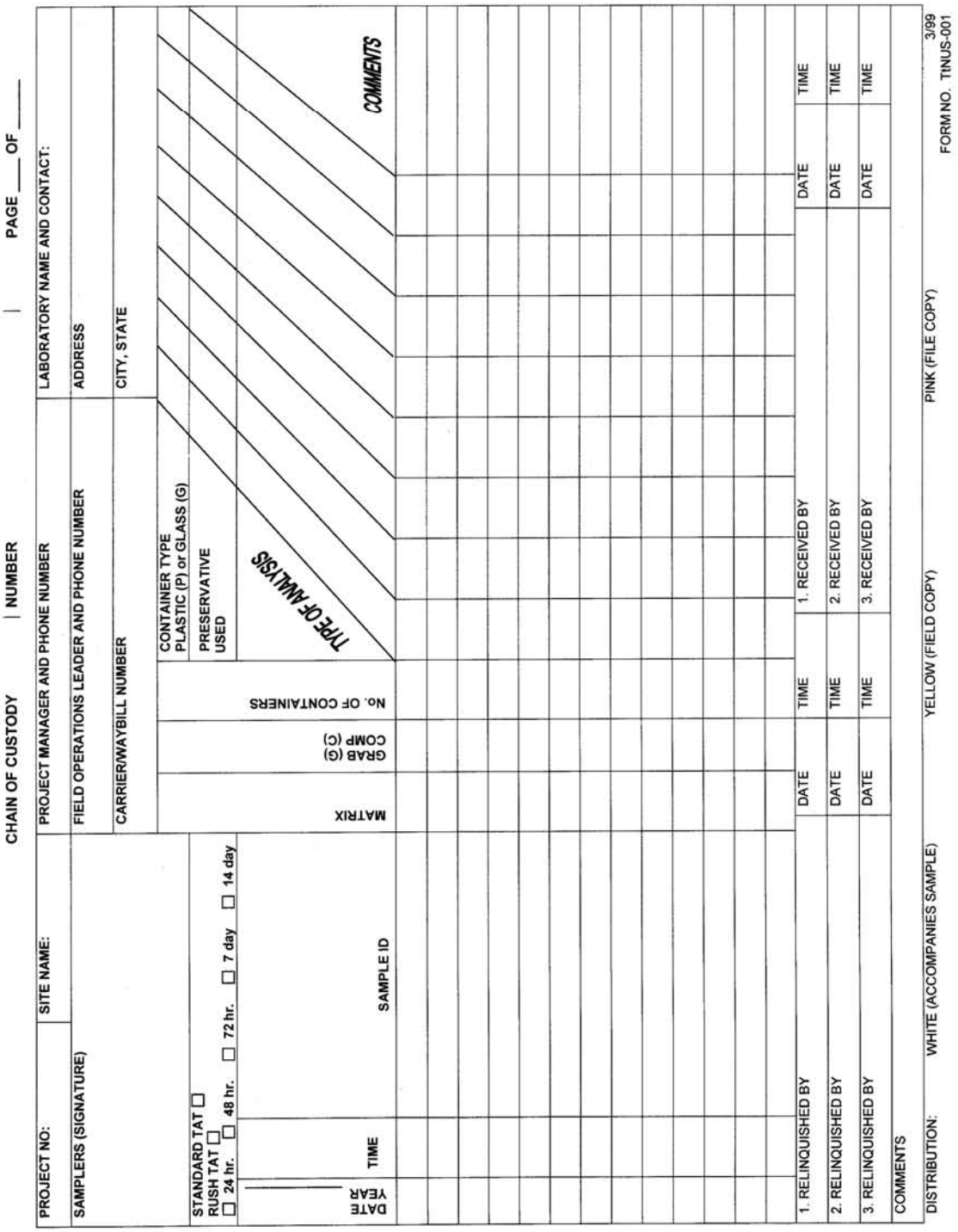

SOP-07

SAMPLE HANDLING, PACKAGING AND SHIPPING

STANDARD OPERATING PROCEDURE

SOP-07

SAMPLE PRESERVATION, PACKAGING, AND SHIPPING

1.0 PURPOSE

This Standard Operating Procedure (SOP) describes the procedures for sample preservation, packaging, and shipping to be used in handling aqueous samples, soils, and sediments collected at the NSWC Crane.

2.0 REQUIRED FIELD FORMS AND EQUIPMENT

Shipping labels

Custody seals

Chain-of-custody form(s)

Sample containers with preservatives: All sample containers for analysis by fixed-base laboratories will be supplied, with preservatives added (if required) and deemed certified clean by the laboratory.

Sample shipping containers (coolers): All sample shipping containers are supplied by the laboratory.

Packaging material: Bubble wrap, ZipLoc® bags, strapping tape, etc.

3.0 PROCEDURES FOR SAMPLE PRESERVATION, PACKAGING, AND SHIPPING

3.1 The laboratory provides sample containers with preservative already included (as required) for the analytical parameter for which the sample is to be analyzed. All samples will be held, stored, and shipped at 4°C. This will be accomplished through refrigeration (used to hold samples prior to shipment) and/or ice.

3.2 The sampler shall maintain custody of the samples until the samples are relinquished to another custodian or to the common carrier.

3.3 Check that each sample container is properly labeled, the container lid is securely fastened, and the container is sealed in a ZipLoc® bag.

3.4 If the container is glass, place the sample container into a bubble-out shipping bag and seal the bag using the self-sealing, pressure sensitive tape supplied with the bag.

3.5 Inspect the insulated shipping cooler. Check for any cracks, holes, broken handles, etc. If the cooler has a drain plug, make certain it is sealed shut, both inside and outside of the cooler. If the cooler is questionable for shipping, the cooler must be discarded.

3.6 Put ice into ZipLoc® bags and place a layer of the sealed bags on the bottom of the cooler. Place the sample containers into the shipping cooler on top of the ice in an upright position (containers will be upright, with the exception of the 40-ml vials). Place ZipLoc® bags of ice flat against the sides of the cooler. Continue filling the cooler with samples until the cooler is nearly full and the movement of the sample containers is limited.

3.7 Add a final layer of ice sealed in ZipLoc® bags to the top of the samples just before the cooler is closed and sealed.

3.8 Place the original (top) signed copy of the chain-of-custody form inside a large ZipLoc® bag. Tape the bag to the inside of the lid of the shipping cooler.

3.9 Close the cooler and seal the cooler with approximately four wraps of strapping tape at each end of the cooler. Prior to wrapping the last wrap of strapping tape, apply a signed, numbered, and dated custody seal to each side of the cooler (one per side). Cover the custody seal with the last wrap of tape. This will provide a tamper evident custody seal system for the sample shipment.

3.10 Affix a shipping label to the top of the cooler containing samples, ensuring all of the shipping information is filled in properly. Overnight (e.g., FedEx Priority Overnight) courier services will be used for all sample shipments.

3.11 All samples will be shipped to the laboratory no more than 72 hours after collection. Under no circumstances will sample hold times be exceeded.

SOP-08

MANAGEMENT OF INVESTIGATION DERIVED WASTE

STANDARD OPERATING PROCEDURE

SOP-08

MANAGEMENT OF INVESTIGATION-DERIVED WASTE

1.0 PURPOSE

This Standard Operating Procedure (SOP) describes how investigation-derived waste (IDW) will be collected, segregated, classified, and managed during the field investigations at the NSWC Crane facility. The following types of IDW will be generated during this investigation:

- Decontamination solutions
- Personal protective equipment and clothing (PPE)
- Miscellaneous trash and incidental items

2.0 REQUIRED FIELD FORMS AND EQUIPMENT

Health and safety equipment (with PPE)
Decontamination equipment
Field logbook and indelible ink pen
Plastic sheeting and/or tarps
55-gallon drums with sealable lids
IDW labels for drums
Wastewater container tanks
Plastic garbage bags

3.0 PROCEDURES

Management of IDW includes the collection, segregation, temporary storage, classification, final disposal, and documentation of the waste-handling activities if necessary.

3.1 Liquid Wastes

Liquid wastes that will be generated during the site activities include decontamination solutions from sampling equipment. These wastes will be collected and transported to a central location at NSWC

Crane (adjacent to a Crane-designated sanitary sewer manhole). The water will be discharged to the sewer by gravity draining.

3.2 PPE and Incidental Trash

All PPE wastes and incidental trash materials (e.g., wrapping or packing materials from supply cartons, waste paper) will be decontaminated (if contaminated), double bagged, securely tied shut, and placed in a designated waste receptacle at NSWC Crane.

APPENDIX B

EMAC CONTRACTOR'S INFORMATION

CONTRACTOR SAMPLE COLLECTION SOPS

1.0 SCOPE AND APPLICATION

The purpose of this Standard Operating Procedure (SOP) is to provide general field sampling guidelines that will assist NWRS personnel in choosing sampling strategies, location, and frequency for proper assessment of site characteristics. This SOP is applicable to all field activities that involve sampling.

These are standard (i.e., typically applicable) operating procedures which may be varied or changed as required, dependent on site conditions, equipment limitations or limitations imposed by the procedure. In all instances, the ultimate procedures employed should be documented and associated with the final report.

Mention of trade names or commercial products does not constitute U.S. EPA endorsement or recommendation for use.

2.0 METHOD SUMMARY

Sampling is the selection of a representative portion of a larger population, universe, or body. Through examination of a sample, the characteristics of the larger body from which the sample was drawn can be inferred. In this manner, sampling can be a valuable tool for determining the presence, type, and extent of contamination by hazardous substances in the environment.

The primary objective of all sampling activities is to characterize a hazardous waste site accurately so that its impact on human health and the environment can be properly evaluated. It is only through sampling and analysis that site hazards can be measured and the job of cleanup and restoration can be accomplished effectively with minimal risk. The sampling itself must be conducted so that every sample collected retains its original physical form and chemical composition. In this way, sample integrity is insured, quality assurance standards are maintained, and the sample can accurately represent the larger body of material under investigation.

The extent to which valid inferences can be drawn from a sample depends on the degree to which the sampling effort conforms to the project's objectives. For example, as few as one sample may produce adequate, technically valid data to address the project's objectives. Meeting the project's objectives requires thorough planning of sampling activities, and implementation of the most appropriate sampling and analytical procedures. These issues will be discussed in this procedure.

3.0 SAMPLE PRESERVATION, CONTAINERS, HANDLING, AND STORAGE

The amount of sample to be collected, and the proper sample container type (i.e., glass, plastic), chemical preservation, and storage requirements are dependent on the matrix being sampled and the parameter(s) of interest. Sample preservation, containers, handling, and storage for air and waste samples are discussed in the specific SOPs for air and waste sampling techniques.

4.0 INTERFERENCES AND POTENTIAL PROBLEMS

The nature of the object or materials being sampled may be a potential problem to the sampler. If a material is homogeneous, it will generally have a uniform composition throughout. In this case, any sample increment can be considered representative of the material. On the other hand, heterogeneous samples present problems to the sampler because of changes in the material over distance, both laterally and vertically.

Samples of hazardous materials may pose a safety threat to both field and laboratory personnel. Proper health and safety precautions should be implemented when handling this type of sample.

Environmental conditions, weather conditions, or non-target chemicals may cause problems and/or interferences when performing sampling activities or when sampling for a specific parameter. Refer to the specific SOPs for sampling techniques.

5.0 EQUIPMENT/APPARATUS

The equipment/apparatus required to collect samples must be determined on a site specific basis. Due to the wide variety of sampling equipment available, refer to the specific SOPs for sampling techniques which include lists of the equipment/apparatus required for sampling.

6.0 REAGENTS

Reagents may be utilized for preservation of samples and for decontamination of sampling equipment. The preservatives required are specified by the analysis to be performed. Decontamination solutions are specified in NWRS SOP #2006, Sampling Equipment Decontamination.

7.0 PROCEDURE

7.1 Types of Samples

In relation to the media to be sampled, two basic types of samples can be considered: the environmental sample and the hazardous sample.

Environmental samples are those collected from streams, ponds, lakes, wells, and are off-site samples that are not expected to be contaminated with hazardous materials. They usually do not require the special handling procedures typically used for concentrated wastes. However, in certain instances, environmental samples can contain elevated concentrations of pollutants and in such cases would have to be handled as hazardous samples.

Hazardous or concentrated samples are those collected from drums, tanks, lagoons, pits, waste piles, fresh spills, or areas previously identified as contaminated, and require special handling procedures because of their potential toxicity or hazard. These samples can be further subdivided based on their degree of hazard; however, care should be taken when handling and shipping any wastes believed to be concentrated regardless of the degree.

The importance of making the distinction between environmental and hazardous samples is two-fold:

(1) Personnel safety requirements: Any sample thought to contain enough hazardous materials to pose a safety threat should be designated as hazardous and handled in a manner which ensures the safety of both field and laboratory personnel.

(2) Transportation requirements: Hazardous samples must be packaged, labeled, and shipped according to the International Air Transport Association (IATA) Dangerous Goods Regulations or Department of Transportation (DOT) regulations and U.S. EPA guidelines.

7.2 Sample Collection Techniques

In general, two basic types of sample collection techniques are recognized, both of which can be used for either environmental or hazardous samples.

Grab Samples

A grab sample is defined as a discrete aliquot representative of a specific location at a given point in time. The sample is collected all at once at one particular point in the sample medium. The representativeness of such samples is defined by the nature of the materials being sampled. In general, as sources vary over time and distance, the representativeness of grab samples will decrease.

Composite Samples

Composites are nondiscrete samples composed of more than one specific aliquot collected at various sampling locations and/or different points in time. Analysis of this type of sample produces an average value and can in certain instances be used as an alternative to analyzing a number of individual grab samples and calculating an average value. It should be noted, however, that compositing can mask problems by diluting isolated concentrations of some hazardous compounds below detection limits.

Compositing is often used for environmental samples and may be used for hazardous samples under certain conditions. For example, compositing of hazardous waste is often performed after compatibility tests have

been completed to determine an average value over a number of different locations (group of drums). This procedure generates data that can be useful by providing an average concentration within a number of units, can serve to keep analytical costs down, and can provide information useful to transporters and waste disposal operations.

For sampling situations involving hazardous wastes, grab sampling techniques are generally preferred because grab sampling minimizes the amount of time sampling personnel must be in contact with the wastes, reduces risks associated with compositing unknowns, and eliminates chemical changes that might occur due to compositing.

7.3 Types of Sampling Strategies

The number of samples that should be collected and analyzed depends on the objective of the investigation. There are three basic sampling strategies: random, systematic, and judgmental sampling.

Random sampling involves collection of samples in a nonsystematic fashion from the entire site or a specific portion of a site. Systematic sampling involves collection of samples based on a grid or a pattern which has been previously established. When judgmental sampling is performed, samples are collected only from the portion(s) of the site most likely to be contaminated. Often, a combination of these strategies is the best approach depending on the type of the suspected/known contamination, the uniformity and size of the site, the level/type of information desired, etc.

7.4 QA Work Plans (QAWP)

A QAWP is required when it becomes evident that a field investigation is necessary. It should be initiated in conjunction with, or immediately following, notification of the field investigation. This plan should be clear and concise and should detail the following basic components, with regard to sampling activities:

- Objective and purpose of the investigation.
- Basis upon which data will be evaluated.
- Information known about the site including location, type and size of the facility, and length of operations/abandonment.
- Type and volume of contaminated material, contaminants of concern (including concentration), and basis of the information/data.
- Technical approach including media/matrix to be sampled, sampling equipment to be used, sample equipment decontamination (if necessary), sampling design and rationale, and SOPs or description of the procedure to be implemented.
- Project management and reporting, schedule, project organization and responsibilities, manpower and cost projections, and required deliverables.
- QA objectives and protocols including tables summarizing field sampling and QA/QC analysis and objectives.

Note that this list of QAWP components is not all-inclusive and that additional elements may be added or altered depending on the specific requirements of the field investigation. It should also be recognized that although a detailed QAWP is quite important, it may be impractical in some instances. Emergency responses and accidental spills are prime examples of such instances where time might prohibit the development of site-specific QAWPs prior to field activities. In such cases, investigators would have to rely on general guidelines and personal judgment, and the sampling or response plans might simply be a strategy based on preliminary information and finalized on site. In any event, a plan of action should be developed, no matter how concise or informal, to aid investigators in maintaining a logical and consistent order to the implementation of their task.

7.5 Legal Implications

The data derived from sampling activities are often introduced as critical evidence during litigation of a hazardous waste site cleanup. Legal issues in which sampling data are important may include cleanup cost recovery, identification of pollution sources and responsible parties, and technical validation of remedial design methodologies. Because of the potential for involvement in legal actions, strict adherence to technical and administrative SOPs is essential during both the development and implementation of sampling activities.

Technically valid sampling begins with thorough planning and continues through the sample collection and analytical procedures. Administrative requirements involve thorough, accurate

documentation of all sampling activities. Documentation requirements include maintenance of a chain of custody, as well as accurate records of field activities and analytical instructions. Failure to observe these procedures fully and consistently may result in data that are questionable, invalid and non-defensible in court, and the consequent loss of enforcement proceedings.

8.0 CALCULATIONS

Refer to the specific SOPs for any calculations which are associated with sampling techniques.

9.0 QUALITY ASSURANCE/ QUALITY CONTROL

Refer to the specific SOPs for the type and frequency of QA/QC samples to be analyzed, the acceptance criteria for the QA/QC samples, and any other QA/QC activities which are associated with sampling techniques.

10.0 DATA VALIDATION

Refer to the specific SOPs for data validation activities that are associated with sampling techniques.

11.0 HEALTH AND SAFETY

When working with potentially hazardous materials, follow U.S. EPA, OSHA, and corporate health and safety procedures.

1.0 SCOPE AND APPLICATION

The purpose of this Standard Operating Procedure (SOP) is to provide a description of the methods used for preventing, minimizing, or limiting cross-contamination of samples due to inappropriate or inadequate equipment decontamination and to provide general guidelines for developing decontamination procedures for sampling equipment to be used during hazardous waste operations as per 29 Code of Federal Regulations (CFR) 1910.120. This SOP does not address personnel decontamination.

These are standard (i.e. typically applicable) operating procedures which may be varied or changed as required, dependent upon site conditions, equipment limitation, or limitations imposed by the procedure. In all instances, the ultimate procedures employed should be documented and associated with the final report.

Mention of trade names or commercial products does not constitute U.S. Environmental Protection Agency (U.S. EPA) endorsement or recommendation for use.

2.0 METHOD SUMMARY

Removing or neutralizing contaminants from equipment minimizes the likelihood of sample cross contamination, reduces or eliminates transfer of contaminants to clean areas, and prevents the mixing of incompatible substances.

Gross contamination can be removed by physical decontamination procedures. These abrasive and non-abrasive methods include the use of brushes, air and wet blasting, and high and low pressure water cleaning.

The first step, a soap and water wash, removes all visible particulate matter and residual oils and grease. This may be preceded by a steam or high pressure water wash to facilitate residuals removal. The second step involves a tap water rinse and a distilled/deionized water rinse to remove the detergent. An acid rinse provides a low pH media for trace metals removal and is included in the decontamination process if metal samples are to be collected. It is followed by another distilled/deionized water rinse. If sample analysis does not include metals, the acid rinse step can be omitted. Next, a high purity solvent rinse is performed for trace organics removal if organics are a concern at the site. Typical solvents used for removal of organic contaminants include acetone, hexane, or water. Acetone is typically chosen because it is an excellent solvent, miscible in water, and not a target analyte on the Priority Pollutant List. If acetone is known to be a contaminant of concern at a given site or if Target Compound List analysis (which includes acetone) is to be performed, another solvent may be substituted. The solvent must be allowed to evaporate completely and then a final distilled/deionized water rinse is performed. This rinse removes any residual traces of the solvent.

The decontamination procedure described above may be summarized as follows:

1. Physical removal
2. Non-phosphate detergent wash
3. Tap water rinse
4. Distilled/deionized water rinse
5. 10% nitric acid rinse
6. Distilled/deionized water rinse
7. Solvent rinse (pesticide grade)
8. Air dry
9. Distilled/deionized water rinse

If a particular contaminant fraction is not present at the site, the nine (9) step decontamination procedure specified above may be modified for site specificity. For example, the nitric acid rinse may be eliminated if metals are not of concern at a site. Similarly, the solvent rinse may be eliminated if organics are not of

concern at a site. Modifications to the standard procedure should be documented in the site specific work plan or subsequent report.

3.0 SAMPLE PRESERVATION, CONTAINERS, HANDLING, AND STORAGE

The amount of sample to be collected and the proper sample container type (i.e., glass, plastic), chemical preservation, and storage requirements are dependent on the matrix being sampled and the parameter(s) of interest.

More specifically, sample collection and analysis of decontamination waste may be required before beginning proper disposal of decontamination liquids and solids generated at a site. This should be determined prior to initiation of site activities.

4.0 INTERFERENCES AND POTENTIAL PROBLEMS

- The use of distilled/deionized water commonly available from commercial vendors may be acceptable for decontamination of sampling equipment provided that it has been verified by laboratory analysis to be analyte free (specifically for the contaminants of concern).

- The use of an untreated potable water supply is not an acceptable substitute for tap water. Tap water may be used from any municipal or industrial water treatment system.

- If acids or solvents are utilized in decontamination they raise health and safety, and waste disposal concerns.

- Damage can be incurred by acid and solvent washing of complex and sophisticated sampling equipment.

5.0 EQUIPMENT/APPARATUS

Decontamination equipment, materials, and supplies are generally selected based on availability. Other considerations include the ease of decontaminating or disposing of the equipment. Most equipment and supplies can be easily procured. For example, soft-bristle scrub brushes or long-handled bottle brushes can be used to remove contaminants. Large galvanized wash tubs, stock tanks, or buckets can hold wash and rinse solutions. Children's wading pools can also be used. Large plastic garbage cans or other similar containers lined with plastic bags can help segregate contaminated equipment. Contaminated liquid can be stored temporarily in metal or plastic cans or drums.

The following standard materials and equipment are recommended for decontamination activities:

5.1 Decontamination Solutions

- Non-phosphate detergent
- Selected solvents (acetone, hexane, nitric acid, etc.)
- Tap water
- Distilled or deionized water

5.2 Decontamination Tools/Supplies

- Long and short handled brushes
- Bottle brushes
- Drop cloth/plastic sheeting
- Paper towels
- Plastic or galvanized tubs or buckets
- Pressurized sprayers (H_2O)
- Solvent sprayers
- Aluminum foil

5.3 Health and Safety Equipment

Appropriate personal protective equipment (i.e., safety glasses or splash shield, appropriate gloves, aprons or coveralls, respirator, emergency eye wash)

5.4 Waste Disposal

- Trash bags
- Trash containers
- 55-gallon drums
- Metal/plastic buckets/containers for storage and disposal of decontamination solutions

6.0 REAGENTS

There are no reagents used in this procedure aside from the actual decontamination solutions. Table 1 (Appendix A) lists solvent rinses which may be required for elimination of particular chemicals. In

general, the following solvents are typically utilized for decontamination purposes:

- 10% nitric acid is typically used for inorganic compounds such as metals. An acid rinse may not be required if inorganics are not a contaminant of concern.
- Acetone (pesticide grade)[(1)]
- Hexane (pesticide grade)[(1)]
- Methanol[(1)]

[(1)] - Only if sample is to be analyzed for organics.

7.0 PROCEDURES

As part of the health and safety plan, a decontamination plan should be developed and reviewed. The decontamination line should be set up before any personnel or equipment enter the areas of potential exposure. The equipment decontamination plan should include:

- The number, location, and layout of decontamination stations.
- Decontamination equipment needed.
- Appropriate decontamination methods.
- Methods for disposal of contaminated clothing, equipment, and solutions.
- Procedures can be established to minimize the potential for contamination. This may include: (1) work practices that minimize contact with potential contaminants; (2) using remote sampling techniques; (3) covering monitoring and sampling equipment with plastic, aluminum foil, or other protective material; (4) watering down dusty areas; (5) avoiding laying down equipment in areas of obvious contamination; and (6) use of disposable sampling equipment.

7.1 Decontamination Methods

All samples and equipment leaving the contaminated area of a site must be decontaminated to remove any contamination that may have adhered to equipment. Various decontamination methods will remove contaminants by: (1) flushing or other physical action, or (2) chemical complexing to inactivate contaminants by neutralization, chemical reaction, disinfection, or sterilization.

Physical decontamination techniques can be grouped into two categories: abrasive methods and non-abrasive methods, as follows:

7.1.1 Abrasive Cleaning Methods

Abrasive cleaning methods work by rubbing and wearing away the top layer of the surface containing the contaminant. The mechanical abrasive cleaning methods are most commonly used at hazardous waste sites. The following abrasive methods are available:

Mechanical

Mechanical methods of decontamination include using metal or nylon brushes. The amount and type of contaminants removed will vary with the hardness of bristles, length of time brushed, degree of brush contact, degree of contamination, nature of the surface being cleaned, and degree of contaminant adherence to the surface.

Air Blasting

Air blasting equipment uses compressed air to force abrasive material through a nozzle at high velocities. The distance between nozzle and surface cleaned, air pressure, time of application, and angle at which the abrasive strikes the surface will dictate cleaning efficiency. Disadvantages of this method are the inability to control the amount of material removed and the large amount of waste generated.

Wet Blasting

Wet blast cleaning involves use of a suspended fine abrasive. The abrasive/water mixture is delivered by compressed air to the contaminated area. By using a very fine abrasive, the amount of materials removed can be carefully controlled.

7.1.2 Non-Abrasive Cleaning Methods

Non-abrasive cleaning methods work by forcing the contaminant off a surface with pressure. In general, the equipment surface is not removed using non-abrasive methods.

Low-Pressure Water

This method consists of a container which is filled with water. The user pumps air out of the container to create a vacuum. A slender nozzle and hose allow the user to spray in hard-to-reach places.

High-Pressure Water

This method consists of a high-pressure pump, an operator controlled directional nozzle, and a high-pressure hose. Operating pressure usually ranges from 340 to 680 atmospheres (atm) and flow rates usually range from 20 to 140 liters per minute.

Ultra-High-Pressure Water

This system produces a water jet that is pressured from 1,000 to 4,000 atmospheres. This ultra-high-pressure spray can remove tightly-adhered surface films. The water velocity ranges from 500 meters/second (m/s) (1,000 atm) to 900 m/s (4,000 atm). Additives can be used to enhance the cleaning action.

Rinsing

Contaminants are removed by rinsing through dilution, physical attraction, and solubilization.

Damp Cloth Removal

In some instances, due to sensitive, non-waterproof equipment or due to the unlikelihood of equipment being contaminated, it is not necessary to conduct an extensive decontamination procedure. For example, air sampling pumps hooked on a fence, placed on a drum, or wrapped in plastic bags are not likely to become heavily contaminated. A damp cloth should be used to wipe off contaminants which may have adhered to equipment through airborne contaminants or from surfaces upon which the equipment was set.

Disinfection/Sterilization

Disinfectants are a practical means of inactivating infectious agents. Unfortunately, standard sterilization methods are impractical for large equipment. This method of decontamination is typically performed off-site.

7.2 Field Sampling Equipment Decontamination Procedures

The decontamination line is setup so that the first station is used to clean the most contaminated item. It progresses to the last station where the least contaminated item is cleaned. The spread of contaminants is further reduced by separating each decontamination station by a minimum of three (3) feet. Ideally, the contamination should decrease as the equipment progresses from one station to another farther along in the line.

A site is typically divided up into the following boundaries: Hot Zone or Exclusion Zone (EZ), the Contamination Reduction Zone (CRZ), and the Support or Safe Zone (SZ). The decontamination line should be setup in the Contamination Reduction Corridor (CRC) which is in the CRZ. Figure 1 (Appendix B) shows a typical contaminant reduction zone layout. The CRC controls access into and out of the exclusion zone and confines decontamination activities to a limited area. The CRC boundaries should be conspicuously marked. The far end is the hotline, the boundary between the exclusion zone and the contamination reduction zone. The size of the decontamination corridor depends on the number of stations in the decontamination process, overall dimensions of the work zones, and amount of space available at the site. Whenever possible, it should be a straight line.

Anyone in the CRC should be wearing the level of protection designated for the decontamination crew. Another corridor may be required for the entry and exit of heavy equipment. Sampling and monitoring equipment and sampling supplies are all maintained outside of the CRC. Personnel don their equipment away from the CRC and enter the exclusion zone through a separate access control point at the hotline. One person (or more) dedicated to decontaminating equipment is recommended.

7.2.1 Decontamination Setup

Starting with the most contaminated station, the decontamination setup should be as follows:

Station 1: Segregate Equipment Drop

Place plastic sheeting on the ground (Figure 2, Appendix B). Size will depend on amount of

equipment to be decontaminated. Provide containers lined with plastic if equipment is to be segregated. Segregation may be required if sensitive equipment or mildly contaminated equipment is used at the same time as equipment which is likely to be heavily contaminated.

Station 2: Physical Removal With A High-Pressure Washer (Optional)

As indicated in 7.1.2, a high-pressure wash may be required for compounds which are difficult to remove by washing with brushes. The elevated temperature of the water from the high-pressure washers is excellent at removing greasy/oily compounds. High pressure washers require water and electricity.

A decontamination pad may be required for the high-pressure wash area. An example of a wash pad may consist of an approximately 1 1/2 foot-deep basin lined with plastic sheeting and sloped to a sump at one corner. A layer of sand can be placed over the plastic and the basin is filled with gravel or shell. The sump is also lined with visqueen and a barrel is placed in the hole to prevent collapse. A sump pump is used to remove the water from the sump for transfer into a drum.

Typically heavy machinery is decontaminated at the end of the day unless site sampling requires that the machinery be decontaminated frequently. A separate decontamination pad may be required for heavy equipment.

Station 3: Physical Removal With Brushes And A Wash Basin

Prior to setting up Station 3, place plastic sheeting on the ground to cover areas under Station 3 through Station 10.
Fill a wash basin, a large bucket, or child's swimming pool with non-phosphate detergent and tap water. Several bottle and bristle brushes to physically remove contamination should be dedicated to this station . Approximately 10 - 50 gallons of water may be required initially depending upon the amount of equipment to decontaminate and the amount of gross contamination.

Station 4: Water Basin

Fill a wash basin, a large bucket, or child's swimming pool with tap water. Several bottle and bristle brushes should be dedicated to this station. Approximately 10-50 gallons of water may be required initially depending upon the amount of equipment to decontaminate and the amount of gross contamination.

Station 5: Low-Pressure Sprayers

Fill a low-pressure sprayer with distilled/deionized water. Provide a 5-gallon bucket or basin to contain the water during the rinsing process. Approximately 10-20 gallons of water may be required initially depending upon the amount of equipment to decontaminate and the amount of gross contamination.

Station 6: Nitric Acid Sprayers

Fill a spray bottle with 10% nitric acid. An acid rinse may not be required if inorganics are not a contaminant of concern. The amount of acid will depend on the amount of equipment to be decontaminated. Provide a 5-gallon bucket or basin to collect acid during the rinsing process.

Station 7: Low-Pressure Sprayers

Fill a low-pressure sprayer with distilled/deionized water. Provide a 5-gallon bucket or basin to collect water during the rinsate process.

Station 8: Organic Solvent Sprayers

Fill a spray bottle with an organic solvent. After each solvent rinse, the equipment should be rinsed with distilled/deionized water and air dried. Amount of solvent will depend on the amount of equipment to decontaminate. Provide a 5-gallon bucket or basin to collect the solvent during the rinsing process.

Solvent rinses may not be required unless organics are a contaminant of concern, and may be eliminated from the station sequence.

Station 9: Low-Pressure Sprayers

Fill a low-pressure sprayer with distilled/deionized water. Provide a 5-gallon bucket or basin to collect water during the rinsate process.

Station 10: Clean Equipment Drop

Lay a clean piece of plastic sheeting over the bottom

plastic layer. This will allow easy removal of the plastic in the event that it becomes dirty. Provide aluminum foil, plastic, or other protective material to wrap clean equipment.

7.2.2 Decontamination Procedures

Station 1: Segregate Equipment Drop

Deposit equipment used on-site (i.e., tools, sampling devices and containers, monitoring instruments radios, clipboards, etc.) on the plastic drop cloth/sheet or in different containers with plastic liners. Each will be contaminated to a different degree. Segregation at the drop reduces the probability of cross contamination. Loose leaf sampling data sheets or maps can be placed in plastic zip lock bags if contamination is evident.

Station 2: Physical Removal With A High-Pressure Washer (Optional)

Use high pressure wash on grossly contaminated equipment. Do not use high- pressure wash on sensitive or non-waterproof equipment.

Station 3: Physical Removal With Brushes And A Wash Basin

Scrub equipment with soap and water using bottle and bristle brushes. Only sensitive equipment (i.e., radios, air monitoring and sampling equipment) which is waterproof should be washed. Equipment which is not waterproof should have plastic bags removed and wiped down with a damp cloth. Acids and organic rinses may also ruin sensitive equipment. Consult the manufacturers for recommended decontamination solutions.

Station 4: Equipment Rinse

Wash soap off of equipment with water by immersing the equipment in the water while brushing. Repeat as many times as necessary.

Station 5: Low-Pressure Rinse

Rinse sampling equipment with distilled/deionized water with a low-pressure sprayer.

Station 6: Nitric Acid Sprayers (required only if metals are a contaminant of concern)

Using a spray bottle rinse sampling equipment with nitric acid. Begin spraying (inside and outside) at one end of the equipment allowing the acid to drip to the other end into a 5-gallon bucket. A rinsate blank may be required at this station. Refer to Section 9.

Station 7: Low-Pressure Sprayers

Rinse sampling equipment with distilled/deionized water with a low-pressure sprayer.

Station 8: Organic Solvent Sprayers

Rinse sampling equipment with a solvent. Begin spraying (inside and outside) at one end of the equipment allowing the solvent to drip to the other end into a 5-gallon bucket. Allow the solvent to evaporate from the equipment before going to the next station. A QC rinsate sample may be required at this station.

Station 9: Low-Pressure Sprayers

Rinse sampling equipment with distilled/deionized water with a low-pressure washer.

Station 10 : Clean Equipment Drop

Lay clean equipment on plastic sheeting. Once air dried, wrap sampling equipment with aluminum foil, plastic, or other protective material.

7.2.3 Post Decontamination Procedures

1. Collect high-pressure pad and heavy equipment decontamination area liquid and waste and store in appropriate drum or container. A sump pump can aid in the collection process. Refer to the Department of Transportation (DOT) requirements for appropriate containers based on the contaminant of concern.

2. Collect high-pressure pad and heavy equipment decontamination area solid waste and store in appropriate drum or container. Refer to the DOT requirements for appropriate containers based on the contaminant of concern.

3. Empty soap and water liquid wastes from basins and buckets and store in appropriate

drum or container. Refer to the DOT requirements for appropriate containers based on the contaminant of concern.

4. Empty acid rinse waste and place in appropriate container or neutralize with a base and place in appropriate drum. pH paper or an equivalent pH test is required for neutralization. Consult DOT requirements for appropriate drum for acid rinse waste.

5. Empty solvent rinse sprayer and solvent waste into an appropriate container. Consult DOT requirements for appropriate drum for solvent rinse waste.

6. Using low-pressure sprayers, rinse basins, and brushes. Place liquid generated from this process into the wash water rinse container.

7. Empty low-pressure sprayer water onto the ground.

8. Place all solid waste materials generated from the decontamination area (i.e., gloves and plastic sheeting, etc.) in an approved DOT drum. Refer to the DOT requirements for appropriate containers based on the contaminant of concern.

9. Write appropriate labels for waste and make arrangements for disposal. Consult DOT regulations for the appropriate label for each drum generated from the decontamination process.

8.0 CALCULATIONS

This section is not applicable to this SOP.

9.0 QUALITYASSURANCE/ QUALITY CONTROL

A rinsate blank is one specific type of quality control sample associated with the field decontamination process. This sample will provide information on the effectiveness of the decontamination process employed in the field.

Rinsate blanks are samples obtained by running analyte free water over decontaminated sampling equipment to test for residual contamination. The blank water is collected in sample containers for handling, shipment, and analysis. These samples are treated identical to samples collected that day. A rinsate blank is used to assess cross contamination brought about by improper decontamination procedures. Where dedicated sampling equipment is not utilized, collect one rinsate blank per day per type of sampling device samples to meet QA2 and QA3 objectives.

If sampling equipment requires the use of plastic tubing it should be disposed of as contaminated and replaced with clean tubing before additional sampling occurs.

10.0 DATA VALIDATION

Results of quality control samples will be evaluated for contamination. This information will be utilized to qualify the environmental sample results in accordance with the project's data quality objectives.

11.0 HEALTH AND SAFETY

When working with potentially hazardous materials, follow OSHA, U.S. EPA, corporate, and other applicable health and safety procedures.

Decontamination can pose hazards under certain circumstances. Hazardous substances may be incompatible with decontamination materials. For example, the decontamination solution may react with contaminants to produce heat, explosion, or toxic products. Also, vapors from decontamination solutions may pose a direct health hazard to workers by inhalation, contact, fire, or explosion.

The decontamination solutions must be determined to be acceptable before use. Decontamination materials may degrade protective clothing or equipment; some solvents can permeate protective clothing. If decontamination materials do pose a health hazard, measures should be taken to protect personnel or substitutions should be made to eliminate the hazard. The choice of respiratory protection based on contaminants of concern from the site may not be appropriate for solvents used in the decontamination process.

Safety considerations should be addressed when using abrasive and non-abrasive decontamination

equipment. Maximum air pressure produced by abrasive equipment could cause physical injury. Displaced material requires control mechanisms.

Material generated from decontamination activities requires proper handling, storage, and disposal. Personal Protective Equipment may be required for these activities.

Material safety data sheets are required for all decontamination solvents or solutions as required by the Hazard Communication Standard (i.e., acetone, alcohol, and trisodiumphosphate).

In some jurisdictions, phosphate containing detergents (i.e., TSP) are banned.

12.0 REFERENCES

Field Sampling Procedures Manual, New Jersey Department of Environmental Protection, February, 1988.

A Compendium of Superfund Field Operations Methods, EPA 540/p-87/001.

Engineering Support Branch Standard Operating Procedures and Quality Assurance Manual, USEPA Region IV, April 1, 1986.

Guidelines for the Selection of Chemical Protective Clothing, Volume 1, Third Edition, American Conference of Governmental Industrial Hygienists, Inc., February, 1987.

Occupational Safety and Health Guidance Manual for Hazardous Waste Site Activities, NIOSH/OSHA/USCG/EPA, October, 1985.

APPENDIX A

Table

Table 1. Soluble Contaminants and Recommended Solvent Rinse

TABLE 1 Soluble Contaminants and Recommended Solvent Rinse		
SOLVENT[1]	EXAMPLES OF SOLVENTS	SOLUBLE CONTAMINANTS
Water	Deionized water Tap water	Low-chain hydrocarbons Inorganic compounds Salts Some organic acids and other polar compounds
Dilute Acids	Nitric acid Acetic acid Boric acid	Basic (caustic) compounds (e.g., amines and hydrazines)
Dilute Bases	Sodium bicarbonate (e.g., soap detergent)	Acidic compounds Phenol Thiols Some nitro and sulfonic compounds
Organic Solvents [2]	Alcohols Ethers Ketones Aromatics Straight chain alkalines (e.g., hexane) Common petroleum products (e.g., fuel, oil, kerosene)	Nonpolar compounds (e.g., some organic compounds)
Organic Solvent[2]	Hexane	PCBs

[1] - Material safety data sheets are required for all decontamination solvents or solutions as required by the Hazard Communication Standard

[2] - WARNING: Some organic solvents can permeate and/or degrade the protective clothing

APPENDIX B

Figures

Figure 1. Contamination Reduction Zone Layout

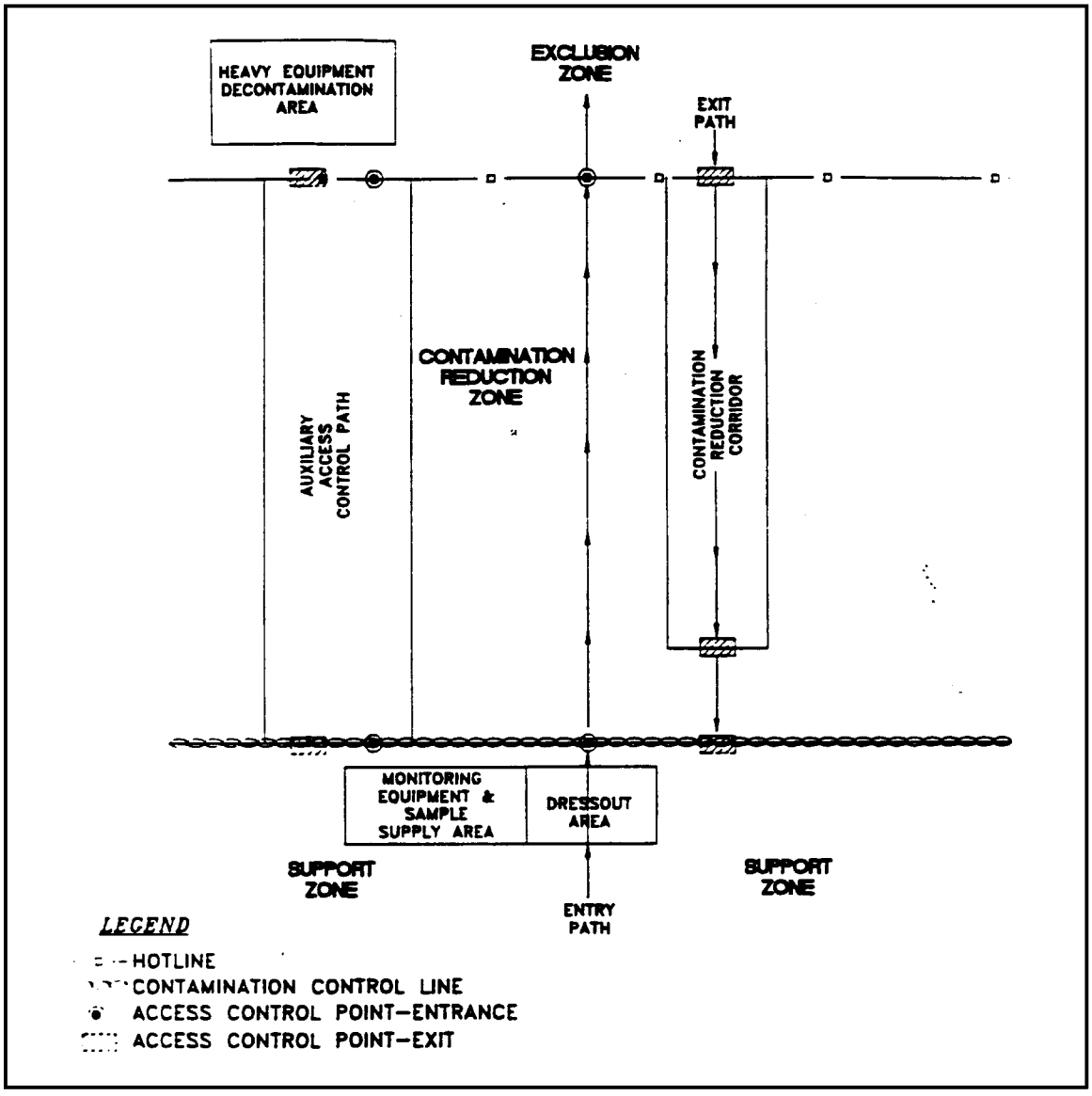

APPENDIX B (Cont'd.)

Figures

Figure 2. Decontamination Layout

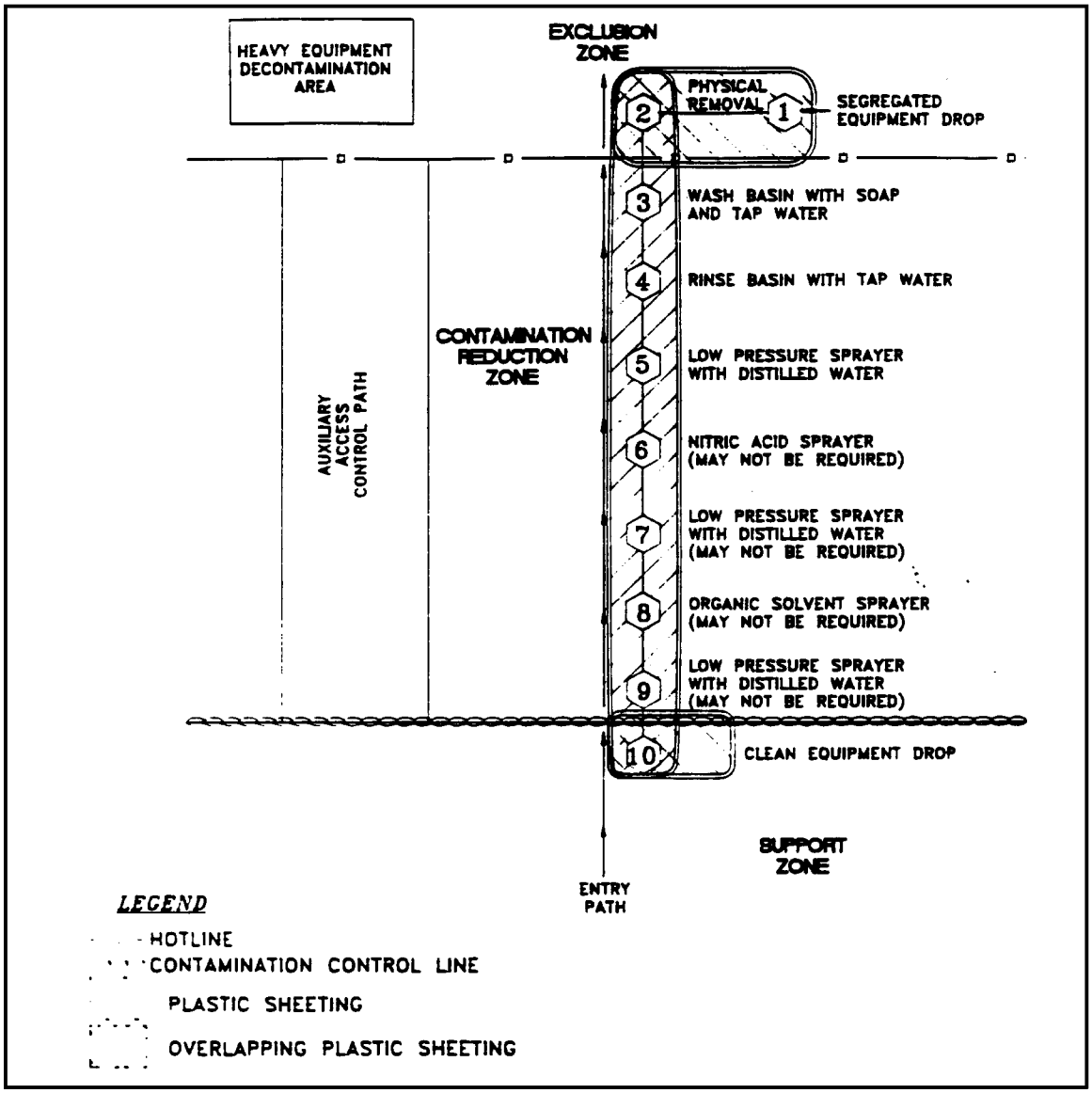

1.0 SCOPE AND APPLICATION

The purpose of this standard operating procedure (SOP) is to provide technical guidance on implementing safe and cost-effective response actions at hazardous waste sites containing drums with unknown contents. Container contents are sampled and characterized for disposal, bulking, recycling, segregation, and classification purposes.

These are standard (i.e., typically applicable) operating procedures which may be varied or changed as required, dependent on site conditions, equipment limitations or limitations imposed by the procedure. In all instances, the ultimate procedures employed should be documented and associated with the final report.

Mention of trade names or commercial products does not constitute U.S. Environmental Protection Agency (U.S. EPA) endorsement or recommendation for use.

2.0 METHOD SUMMARY

Prior to sampling, drums must be excavated, (if necessary), inspected, staged, and opened. Drum excavation must be performed by qualified personnel. Inspection involves the observation and recording of visual qualities of each drum and any characteristics pertinent to the classification of the drum's contents. Staging involves the physical grouping of drums according to classifications established during the physical inspection. Opening of closed drums can be performed manually or remotely. Remote drum opening is recommended for worker safety. The most widely used method of sampling a drum involves the use of a glass thief. This method is quick, simple, relatively inexpensive, and requires no decontamination. The contents of a drum can be further characterized by performing various field tests.

3.0 SAMPLE PRESERVATION, CONTAINERS, HANDLING, AND STORAGE

Samples collected from drums are considered waste samples and as such, adding preservatives is not required due to the potential reaction of the sample with the preservative. Samples should, however, be cooled to 4°C and protected from sunlight in order to minimize any potential reaction due to the light sensitivity of the sample.

Sample bottles for collection of waste liquids, sludges, or solids are typically wide mouth amber jars with Teflon-lined screw caps. Actual volume required for analysis should be determined in conjunction with the laboratory performing the analysis.

Waste sample handling procedures should be as follows:

1. Label the sample container with the appropriate sample label and complete the appropriate field data sheet(s). Place sample container into two resealable plastic bags.

2. Place each bagged sample container into a shipping container which has been lined with plastic. Pack the container with enough non-combustible, absorbent, cushioning material to minimize the possibility of containers breaking, and to absorb any material which may leak.

   Note: Depending on the nature and quantity of the material to be shipped, different packaging may be required. The transportation company or a shipping/receiving expert should be consulted prior to packing the samples.

3. Complete a chain of custody record for each shipping container, place into a resealable

plastic bag, and affix to the inside lid of the shipping container.

4. Secure and custody seal the lid of the shipping container. Label the shipping container appropriately and arrange for the appropriate transportation mode consistent with the type of hazardous waste involved.

4.0 INTERFERENCES AND POTENTIAL PROBLEMS

If buried drums are suspected, geophysical investigation techniques such as magnetometry or ground penetrating radar may be employed in an attempt to determine the location and depth of drums. During excavation, the soil must be removed with great caution to minimize the potential for drum rupture.

Until the contents are characterized, sampling personnel should assume that unlabelled drums contain hazardous materials. Labelled drums are frequently mislabelled, especially drums that are reused. Because a drum's label may not accurately describe its contents, extreme caution must be exercised when working with or around drums.

If a drum which contains a liquid cannot be moved without rupture, its contents may be immediately transferred to a sound drum using an appropriate method of transfer based on the type of waste. In any case, preparations should be made to contain the spill (i.e., spill pads, dike, etc.) should one occur.

If a drum is leaking, open, or deteriorated, then it must be placed immediately in overpack containers.

The practice of tapping drums to determine their contents is neither safe nor effective and should not be used if the drums are visually overpressurized or if shock-sensitive materials are suspected. A laser thermometer may be effective in order to determine the level of the drum contents via surface temperature differences.

Drums that have been overpressurized to the extent that the head is swollen several inches above the level of the chime should not be moved. A number of devices have been developed for venting critically swollen drums. One method that has proven to be effective is a tube and spear device. A light aluminum tube (3 meters long) is positioned at the vapor space of the drum. A rigid, hooking device attached to the tube, goes over the chime and holds the tube securely in place. The spear is inserted in the tube and positioned against the drum wall. A sharp blow on the end of the spear drives the sharpened tip through the drum and the gas vents along the grooves. Venting should be done from behind a wall or barricade. Once the pressure has been relieved, the bung can be removed and the drum sampled.

Because there is potential for accidents to occur during handling, particularly initial handling, drums should only be handled if necessary. All personnel should be warned of the hazards prior to handling drums. Overpack drums and an adequate volume of absorbent material should be kept near areas where minor spills may occur. Where major spills may occur, a containment berm adequate to contain the entire volume of liquid in the drums should be constructed before any handling takes place. If drum contents spill, personnel trained in spill response should be used to isolate and contain the spill.

5.0 EQUIPMENT/APPARATUS

The following are standard materials and equipment required for sampling:

- Personal protection equipment
- Wide-mouth amber glass jars with Teflon cap liner, approximately 500 mL volume
- Other appropriate sample jars
- Uniquely numbered sample identification labels with corresponding data sheets
- Drum/Tank Sampling Data Sheets and Field Test Data Sheets for Drum/Tank Sampling
- Chain of Custody records
- Decontamination materials
- Glass thieving tubes or COLIWASA
- Coring device
- Stainless steel spatula or spoons
- Laser thermometer
- Drum overpacks
- Absorbent material for spills
- Drum opening devices

Bung Wrench

A common method for opening drums manually is using a universal bung wrench. These wrenches have fittings made to

remove nearly all commonly encountered bungs. They are usually constructed of a non-sparking metal alloy (i.e., brass, bronze/manganese, aluminum, etc.) formulated to reduce the likelihood of sparks. The use of a "NON-SPARKING" wrench does not completely eliminate the possibility of a spark being produced.

Drum Deheader

One means by which a drum can be opened manually when a bung is not removable with a bung wrench is by using a drum deheader. This tool is constructed of forged steel with an alloy steel blade and is designed to cut the lid of a drum off or part way off by means of a scissors-like cutting action. A limitation of this device is that it can be attached only to closed head drums. Drums with removable heads must be opened by other means.

Hand Pick, Pickaxe, and Hand Spike

These tools are usually constructed of brass or a non-sparking alloy with a sharpened point that can penetrate the drum lid or head when the tool is swung. The hand picks or pickaxes that are most commonly used are commercially available; whereas, the spikes are generally uniquely fabricated four foot long poles with a pointed end.

Backhoe Spike

Another means used to open drums remotely for sampling is a metal spike attached or welded to a backhoe bucket. This method is very efficient and is often used in large-scale operations.

Hydraulic Drum Opener

Recently, remotely operated hydraulic devices have been fabricated to open drums. This device uses hydraulic pressure to force a non-sparking spike through the wall of a drum. It consists of a manually operated pump which pressurizes fluid through a length of hydraulic line.

Pneumatic Devices

A pneumatic bung remover consists of a compressed air supply that is controlled by a two-stage regulator. A high pressure air line of desired length delivers compressed air to a pneumatic drill, which is adapted to turn bung fitting selected to fit the bung to be removed. An adjustable bracketing system has been designed to position and align the pneumatic drill over the bung. This bracketing system must be attached to the drum before the drill can be operated. Once the bung has been loosened, the bracketing system must be removed before the drum can be sampled. This remote bung opener does not permit the slow venting of the container, and therefore appropriate precautions must be taken. It also requires the container to be upright and relatively level. Bungs that are rusted shut cannot be removed with this device.

6.0 REAGENTS

Reagents are not typically required for preserving drum samples. However, reagents will be utilized for decontamination of sampling equipment.

7.0 PROCEDURES

7.1 Preparation

1. Determine the extent of the sampling effort, the sampling methods to be employed, and the types and amounts of equipment and supplies needed.

2. Obtain necessary sampling and monitoring equipment.

3. Decontaminate or preclean equipment, and ensure that it is in working order.

4. Prepare scheduling and coordinate with staff, clients, and regulatory agency, if appropriate.

5. Perform a general site survey prior to site entry in accordance with the site specific Health and Safety Plan.

6. Use stakes, flagging, or buoys to identify and mark all sampling locations. If required the proposed locations may be adjusted based on site access, property boundaries, and surface obstructions.

7.2 Drum Excavation

If it is presumed that buried drums are on-site and prior to beginning excavation activities, geophysical investigation techniques should be utilized to approximate the location and depth of the drums. In addition, it is important to ensure that all locations where excavation will occur are clear of utility lines, pipes and poles (subsurface as well as above surface).

Excavating, removing, and handling drums are generally accomplished with conventional heavy construction equipment. These activities should be performed by an equipment operator who has experience in drum excavation. During excavation activities, drums must be approached in a manner that will avoid digging directly into them.

The soil around the drum should be excavated with non-sparking hand tools or other appropriate means and as the drums are exposed, a visual inspection should be made to determine the condition of the drums. Ambient air monitoring should be done to determine the presence of unsafe levels of volatile organics, explosives, or radioactive materials. Based on this preliminary visual inspection, the appropriate mode of drum excavation and handling may be determined.

Drum identification and inventory should begin before excavation. Information such as location, date of removal, drum identification number, overpack status, and any other identification marks should be recorded on the Drum/Tank Sampling Data Sheet (Attachment 1, Appendix A).

7.3 Drum Inspection

Appropriate procedures for handling drums depend on the contents. Thus, prior to any handling, drums should be visually inspected to gain as much information as possible about their contents. The drums should be inspected for the following:

1. Drum condition, corrosion, rust, punctures, bungs, and leaking contents.

2. Symbols, words, or other markings on the drum indicating hazards (i.e., explosive, radioactive, toxic, flammable), or further identifying the drums.

3. Signs that the drum is under pressure.

4. Shock sensitivity.

Monitoring should be conducted around the drums using instruments such as radiation meters, organic vapor analyzers (OVA) and combustible gas indicators (CGI).

Survey results can be used to classify the drums into categories, for instance:

- Radioactive
- Leaking/deteriorating
- Bulging
- Lab packs
- Explosive/shock sensitive
- Empty

All personnel should assume that unmarked drums contain hazardous materials until their contents have been categorized. Once a drum has been visually inspected and any immediate hazard has been eliminated by overpacking or transferring the drum's contents, the drum is affixed with a numbered tag and transferred to a staging area. Color-coded tags, labels or bands should be used to identify the drum's category based on visual inspection. A description of each drum, its condition, any unusual markings, the location where it was buried or stored, and field monitoring information are recorded on a Drum/Tank Sampling Data Sheet (Attachment 1, Appendix A). This data sheet becomes the principal record keeping tool for tracking the drum on-site.

7.4 Drum Staging

Prior to sampling, the drums should be staged to allow easy access. Ideally, the staging area should be located just far enough from the drum opening area to prevent a chain reaction if one drum should explode or catch fire when opened.

During staging, the drums should be physically separated into the following categories: those containing liquids, those containing solids, those containing lab packs, and those which are empty.

This is done because the strategy for sampling and handling drums/containers in each of these categories will be different. This may be achieved by visual inspection of the drum and its labels, codes, etc. Solids and sludges are typically disposed of in open top drums. Closed head drums with a bung opening generally contain liquid.

Where there is good reason to suspect that drums contain radioactive, explosive, or shock-sensitive materials, these drums should be staged in a separate, isolated area. Placement of explosives and shock-sensitive materials in diked and fenced areas will minimize the hazard and the adverse effects of any premature detonation of explosives.

Where space allows, the drum opening area should be physically separated from the drum removal and drum staging operations. Drums are moved from the staging area to the drum opening area one at a time using forklift trucks equipped with drum grabbers or a barrel grappler. In a large-scale drum handling operation, drums may be conveyed to the drum opening area using a roller conveyor. Drums may be restaged as necessary after opening and sampling.

7.5 Drum Opening

There are three basic techniques available for opening drums at hazardous waste sites:

- Manual opening with non-sparking bung wrenches
- Drum deheading
- Remote drum puncturing or bung removal

The choice of drum opening techniques and accessories depends on the number of drums to be opened, their waste contents, and physical condition. Remote drum opening equipment should always be considered in order to protect worker safety. Under OSHA 1910.120, manual drum opening with bung wrenches or deheaders should be performed ONLY with structurally sound drums and waste contents that are known to be non-shock sensitive, non-reactive, non-explosive, and non-flammable.

7.5.1 Manual Drum Opening with a Bung Wrench

Manual drum opening with bung wrenches (Figure 1, Appendix B) should not be performed unless the drums are structurally sound (no evidence of bulging or deformation) and their contents are known to be non-shock sensitive, non-reactive, non-explosive or non-flammable. If opening the drum with bung wrenches is deemed safe, then certain procedures should be implemented to minimize the hazard:

- Field personnel should be fully outfitted with protective gear.
- Drums should be positioned upright with the bung up, or, for drums with bungs on the side, laid on their sides with the bung plugs up.
- The wrenching motion should be a slow, steady pull across the drum. If the length of the bung wrench handle provides inadequate leverage for unscrewing the plug, a "cheater bar" can be attached to the handle to improve leverage.

7.5.2 Manual Drum Opening with a Drum Deheader

Drums are opened with a drum deheader (Figure 2, Appendix B) by first positioning the cutting edge just inside the top chime and then tightening the adjustment screw so that the deheader is held against the side of the drum. Moving the handle of the deheader up and down while sliding the deheader along the chime will enable the entire top to be rapidly cut off if so desired. If the top chime of a drum has been damaged or badly dented it may not be possible to cut the entire top off. Since there is always the possibility that a drum may be under pressure, the initial cut should be made very slowly to allow for the gradual release of any built-up pressure. A safer technique would be to employ a remote method prior to using the deheader.

Self-propelled drum openers which are either electrically or pneumatically driven are available and can be used for quicker and more efficient deheading.

The drum deheader should be decontaminated, as necessary, after each drum is opened to avoid cross contamination and/or adverse chemical reactions from incompatible materials.

7.5.3 Manual Drum Opening with a Hand Pick, Pickaxe, or Spike

When a drum must be opened and neither a bung

wrench nor a drum deheader is suitable, then it can be opened for sampling by using a hand pick, pickaxe, or spike (Figure 3, Appendix B). Often the drum lid or head must be hit with a great deal of force in order to penetrate it. Because of this, the potential for splash or spraying is greater than with other opening methods and therefore, this method of drum opening is not recommended, particularly when opening drums containing liquids. Some spikes used have been modified by the addition of a circular splash plate near the penetrating end. This plate acts as a shield and reduces the amount of splash in the direction of the person using the spike. Even with this shield, good splash gear is essential.

Since drums, some of which may be under pressure, cannot be opened slowly with these tools, spray from drums is common and appropriate safety measures must be taken. The pick or spike should be decontaminated after each drum is opened to avoid cross contamination and/or adverse chemical reaction from incompatible materials.

7.5.4 Remote Drum Opening with a Backhoe Spike

Remotely operated drum opening tools are the safest available means of drum opening. Remote drum opening is slow, but provides a high degree of safety compared to manual methods of opening.

In the opening area, drums should be placed in rows with adequate aisle space to allow ease in backhoe maneuvering. Once staged, the drums can be quickly opened by punching a hole in the drum head or lid with the spike.

The spike (Figure 4, Appendix B) should be decontaminated after each drum is opened to prevent cross contamination and/or adverse reaction from incompatible material. Even though some splash or spray may occur when this method is used, the operator of the backhoe can be protected by mounting a large shatter-resistant shield in front of the operator's cage. This combined with the normal personal protection gear should be sufficient to protect the operator. Additional respiratory protection can be afforded by providing the operator with an on-board airline system.

7.5.5 Remote Drum Opening with Hydraulic Devices

A piercing device with a non-sparking, metal point is attached to the end of a hydraulic line and is pushed into the drum by the hydraulic pressure (Figure 5, Appendix B). The piercing device can be attached so that a hole for sampling can be made in either the side or the head of the drum. Some of the metal piercers are hollow or tube-like so that they can be left in place if desired and serve as a permanent tap or sampling port. The piercer is designed to establish a tight seal after penetrating the container.

7.5.6 Remote Drum Opening with Pneumatic Devices

Pneumatically-operated devices utilizing compressed air have been designed to remove drum bungs remotely (Figure 6, Appendix B). Prior to opening the drum, a bung fitting must be selected to fit the bung to be removed. The adjustable bracketing system is then attached to the drum and the pneumatic drill is aligned over the bung. This must be done before the drill can be operated. The operator then moves away from the drum to operate the equipment. Once the bung has been loosened, the bracketing system must be removed before the drum can be sampled. This remote bung opener does not permit the slow venting of the container, and therefore appropriate precautions must be taken. It also requires the container to be upright and relatively level. Bungs that are rusted shut cannot be removed with this device.

7.6 Drum Sampling

After the drum has been opened, preliminary monitoring of headspace gases should be performed first with an explosimeter/oxygen meter. Afterwards, an OVA or other instruments should be used. If possible, these instruments should be intrinsically safe. In most cases it is impossible to observe the contents of these sealed or partially sealed drums. Since some layering or stratification is likely in any solution left undisturbed, a sample that represents the entire depth of the drum must be taken.

When sampling a previously sealed drum, a check should be made for the presence of a bottom sludge. This is easily accomplished by measuring the depth to apparent bottom then comparing it to the known interior depth.

7.6.1 Glass Thief Sampler

The most widely used implement for sampling drum liquids is a glass tube commonly referred to as a glass thief (Figure 7, Appendix B). This tool is cost effective, quick, and disposable. Glass thieves are typically 6mm to 16mm I.D. and 48 inches long.

Procedures for Use:

1. Remove the cover from the sample container.

2. Insert glass tubing almost to the bottom of the drum or until a solid layer is encountered. About one foot of tubing should extend above the drum.

3. Allow the waste in the drum to reach its natural level in the tube.

4. Cap the top of the sampling tube with a tapered stopper or thumb, ensuring liquid does not come into contact with stopper.

5. Carefully remove the capped tube from the drum and insert the uncapped end into the appropriate sample container.

6. Release stopper and allow the glass thief to drain until the container is approximately two-thirds full.

7. Remove tube from the sample container, break it into pieces and place the pieces in the drum.

8. Cap the sample container tightly and label it. Place the sample container into a carrier.

9. Replace the bung or place plastic over the drum.

10. Log all samples in the site logbook and on Drum/Tank Sampling Data Sheets.

11. Perform hazard categorization analyses if included in the project scope.

12. Transport the sample to the decontamination zone and package it for transport to the analytical laboratory, as necessary. Complete chain of custody records.

In many instances a drum containing waste material will have a sludge layer on the bottom. Slow insertion of the sample tube into this layer; then a gradual withdrawal will allow the sludge to act as a bottom plug to maintain the fluid in the tube. The plug can be gently removed and placed into the sample container by the use of a stainless steel lab spoon.

It should be noted that in some instances disposal of the tube by breaking it into the drum may interfere with eventual plans for the removal of its contents. The use of this technique should be cleared with the project officer or other glass thief disposal techniques should be evaluated.

7.6.2 COLIWASA Sampler

The Composite Liquid Waste Sampler (COLIWASA) and modifications thereof are equipment that collect a sample from the full depth of a drum and maintain it in the transfer tube until delivery to the sample bottle. The COLIWASA (Figure 8, Appendix B) is a much cited sampler designed to permit representative sampling of multiphase wastes from drums and other containerized wastes. One configuration consists of a 152 cm by 4 cm I.D. section of tubing with a neoprene stopper at one end attached by a rod running the length of the tube to a locking mechanism at the other end.

Manipulation of the locking mechanism opens and closes the sampler by raising and lowering the neoprene stopper. One model of the COLIWASA is shown in Appendix B; however, the design can be modified and/or adapted somewhat to meet the needs of the sampler.

The major drawbacks associated with using a COLIWASA concern decontamination and costs. The sampler is difficult to decontaminate in the field and its high cost in relation to alternative procedures (glass tubes) make it an impractical throwaway item. It still has applications, however, especially in instances where a true representation of a multiphase waste is absolutely necessary.

Procedures for Use

1. Put the sampler in the open position by placing the stopper rod handle in the T-position and pushing the rod down until the handle sits against the sampler's locking block.

2. Slowly lower the sampler into the liquid waste. Lower the sampler at a rate that permits the levels of the liquid inside and outside the sampler tube to be about the same. If the level of the liquid in the sample tube is lower than that outside the sampler, the sampling rate is too fast and will result in a non-representative sample.

3. When the sampler stopper hits the bottom of the waste container, push the sampler tube downward against the stopper to close the sampler. Lock the sampler in the closed position by turning the T-handle until it is upright and one end rests tightly on the locking block.

4. Slowly withdraw the sample from the waste container with one hand while wiping the sampler tube with a disposable cloth or rag with the other hand.

5. Carefully discharge the sample into the appropriate sample container by slowly pulling the lower end of the T-handle away from the locking block while the lower end of the sampler is positioned in a sample container.

6. Cap the sample container tightly and label it. Place the sample container in a carrier.

7. Replace the bung or place plastic over the drum.

8. Log all samples in the site logbook and on Drum/Tank Sampling Data Sheets.

9. Perform hazard categorization analyses if included in the project scope.

10. Transport the sample to the decontamination zone and package for transport to the analytical laboratory, as necessary. Complete the Chain of Custody records.

7.6.3 Coring Device

A coring device may be used to sample drum solids. Samples should be taken from different areas within the drum. This sampler consists of a series of extensions, a T- handle, and the coring device.

Procedures for use:

1. Assemble the sampling equipment.

2. Remove the cover from the sample container.

3. Insert the sampling device to the bottom of the drum. The extensions and the "T" handle should extend above the drum.

4. Rotate the sampling device to cut a core of material.

5. Slowly withdraw the sampling device so that as much sample material as possible is retained within it.

6. Transfer the sample to the appropriate sample container, and label it. A stainless steel spoon or scoop may be used as necessary.

7. Cap the sample container tightly and place it in a carrier.

8. Replace the bung or place plastic over the drum.

9. Log all samples in the site log book and on Drum/Tank Sampling Data Sheets.

10. Perform hazard categorization analyses if included in the project scope.

11. Transport the sample to the decontamination zone and package it for transport to the analytical laboratory, as necessary. Complete chain of custody records.

7.7 Hazard Categorization

The goal of characterizing or categorizing the contents of drums is to obtain a quick, preliminary assessment of the types and levels of pollutants contained in the drums. These activities generally involve rapid, non-rigorous methods of analysis. The data obtained from these methods can be used to make decisions regarding drum staging or restaging, bulking or compositing of the drum contents.

As a first step in obtaining these data, standard tests should be used to classify the drum contents into general categories such as auto-reactives, water reactives, inorganic acids, organic acids, heavy metals, pesticides, cyanides, inorganic oxidizers, and organic oxidizers. In some cases, further analyses should be conducted to more precisely identify the drum contents.

There are several methods available to perform these tests:

- the HazCat^{R} chemical identification system
- the Chlor-N-Oil Test Kit
- Spill-fyter Chemical Classifier Strips
- Setaflash (for ignitability)

These methods must be performed according to the manufacturers' instructions and the results must be documented on the Field Test Data Sheet for Drum/Tank Sampling (Attachment 2, Appendix A).

Other tests which may be performed include:

- Water Reactivity
- Specific Gravity Test (compared to water)
- Water Solubility Test
- pH of Aqueous Solution

The tests must be performed in accordance with the instructions on the Field Test Data Sheet for Drum/Tank Sampling and results of the tests must be documented on these data sheets.

The specific methods that will be used for hazard categorization must be documented in the Quality Assurance Work Plan.

8.0 CALCULATIONS

This section is not applicable to this SOP.

9.0 QUALITY ASSURANCE/ QUALITY CONTROL

The following general quality assurance procedures apply:

1. All data must be documented on Chain of Custody records, Drum/Tank Sampling Data Sheets, Field Test Data Sheet for Drum/Tank Sampling, or within site logbooks.

2. All instrumentation must be operated in accordance with operating instructions as supplied by the manufacturer, unless otherwise specified in the work plan. Equipment checkout and calibration activities must occur prior to sampling/operation, and they must be documented.

10.0 DATA VALIDATION

This section is not applicable to this SOP.

11.0 HEALTH AND SAFETY

When working with potentially hazardous materials, follow U.S. EPA, OSHA, and corporate health and safety procedures.

More specifically, the opening of closed containers is one of the most hazardous site activities. Maximum efforts should be made to ensure the safety of the sampling team. Proper protective equipment and a general awareness of the possible dangers will minimize the risk inherent to sampling operations. Employing proper drum opening techniques and equipment will also safeguard personnel. The use of remote sampling equipment whenever feasible is highly recommended.

12.0 REFERENCES

Guidance Document for Cleanup of Surface Tank and Drum Sites, OSWER Directive 9380.0-3.

Drum Handling Practices at Hazardous Waste Sites, EPA-600/2-86-013.

APPENDIX A

Attachments

ATTACHMENT 1. Drum/Tank Sampling Data Sheet

Samplers: _____ Date: _____

Site Name: _____ Work Order Number: _____

Container Number/Sample Number: _____ Task Leader: _____

SITE INFORMATION:

1. Terrain, drainage description:_____

2. Weather conditions (from observation):_____

MET station on site: No Yes

CONTAINER INFORMATION:

1. Container type: Drum Tank Other:_____

2. Container dimensions: Shape:_____

Approximate size:_____

3. Label present: No
Yes:_____

Other Markings: _____
_____
_____
_____

4. Spill or leak present: No Yes Dimensions:_____

5. Container location: (Circle one) N/A See Map Other: _____
_____
_____
_____
_____
_____

APPENDIX A (Cont'd)

Attachments

ATTACHMENT 1. Drum/Tank Sampling Data Sheet (cont'd)

SAMPLE INFORMATION:

1. Description: _____ liquid _____ solid (_____ powder or _____ crystals) _____ sludge

2. Color: _____ Vapors:_____
Other:_____

3. Local effects present: (damage - environmental, material)_____

FIELD MONITORING:

1. PID: _____ Background (clean zone)

_____ Probe used/Model used

_____ Reading from container opening

2. FID: _____ Background (clean zone)

_____ Reading from container opening

3. Radiation Meter:

_____ Model used

_____ Background (clean zone)

_____ Reading from container opening

4. Explosimeter/Oxygen Meter:

_____ Oxygen level from container opening

_____ LEL level from container opening

APPENDIX A (Cont'd)

Attachments

ATTACHMENT 2. Field Test Data Sheet for Drum/Tank Sampling

Samplers: _____ Date: _____

Site Name: _____ Work Order Number: -_____

Container Number/Sample Number: _____ Task Leader: _____

SAMPLE MONITORING INFORMATION:

1. PID: _____ Background (clean zone)

_____ Probe used/Model used

_____ Reading from sample

2. FID: _____ Background (clean zone)

_____ Reading from sample

3. Radiation Meter: _____ Model used

_____ Background (clean zone)

_____ Reading from sample

4. Explosimeter/Oxygen Meter: _____ Oxygen level (sample)

_____ LEL level (sample)

SAMPLE DESCRIPTION:

_____ Liquid _____ Solid _____ Sludge _____ Color _____ Vapors

WATER REACTIVITY:

1. Add small amount of sample to water: _____ bubbles _____ color change to _____

_____ vapor formation _____ heat _____ No Change

SPECIFIC GRAVITY TEST (compared to water):

1. Add small amount of sample to water: _____ sinks _____ floats

2. If liquid sample sinks, screen for chlorinated compounds. If liquid sample floats and appears to be oily, screen for PCBs (Chlor-N-Oil kit).

APPENDIX A (Cont'd)

Attachments

ATTACHMENT 2. Field Test Data Sheet for Drum/Tank Sampling (cont'd)

CHLOR N OIL TEST KIT INFORMATION:

1. Test kit used for this sample: Yes No

2. Results: _____ PCB not present _____ PCB present, less than 50 ppm

_____ PCB present, greater than 50 ppm _____ 100% PCB present

WATER SOLUBILITY TEST:

1. Add approximately one part sample to five parts water. You may need to stir and heat gently. **[DO NOT HEAT IF WATER REACTIVE!]** Results: _____ total _____ partial _____ no solubility

pH OF AQUEOUS SOLUTION:

1. Using 0-14 pH paper, check pH of water/sample solution: _____.

SPILL-FYTER CHEMICAL CLASSIFIER STRIPS:

1. Acid/Base Risk: (Circle one)	Color Change
Strong acid (0)	RED
Moderately acidic (1-3)	ORANGE
Weak acid (5)	YELLOW
Neutral (7)	GREEN
Moderately basic (9-11)	Dark GREEN
Strong Base (13-14)	Dark BLUE

2. Oxidizer Risk: (Circle one)

Not Present	WHITE
Present	BLUE, RED, OR ANY DIVERGENCE FROM WHITE

3. Fluoride Risk: (Circle one)

Not Present	PINK
Present	YELLOW

APPENDIX A (Cont'd)

Attachments

ATTACHMENT 2. Field Test Data Sheet for Drum/Tank Sampling (cont'd)

4. Petroleum Product, Organic Solvent Risk: (Circle one)

Not Present	LIGHT BLUE
Present	DARK BLUE

5. Iodine, Bromine, Chlorine Risk: (Circle one)

Not Present	PEACH
Present	WHITE OR YELLOW

SETAFLASH IGNITABILITY TEST:

140°F	Ignitable: _____	Non-Ignitable _____
160°F	Ignitable: _____	Non-Ignitable _____
_____	Ignitable: _____	Non-Ignitable _____
_____	Ignitable: _____	Non-Ignitable _____
_____	Ignitable: _____	Non-Ignitable _____
_____	Ignitable: _____	Non-Ignitable _____

Comments:
_____
_____
_____
_____
_____
_____

HAZCAT KIT TESTS:

1. Test: _____ Outcome:_____

Comments:_____

_____

2. Test: _____ Outcome:_____

Comments:_____

_____

APPENDIX A (Cont'd)

Attachments

ATTACHMENT 2. Field Test Data Sheet for Drum/Tank Sampling (cont'd)

3. Test: _____ Outcome:_____

Comments:_____

_____

4. Test: _____ Outcome:_____

Comments:_____

_____

5. Test: _____ Outcome:_____

Comments:_____

_____

HAZCAT PESTICIDES KIT:

Present: _____ Not Present: _____

Comments: _____

_____

_____

APPENDIX B

Figures

Figure 1. Universal Bung Wrench

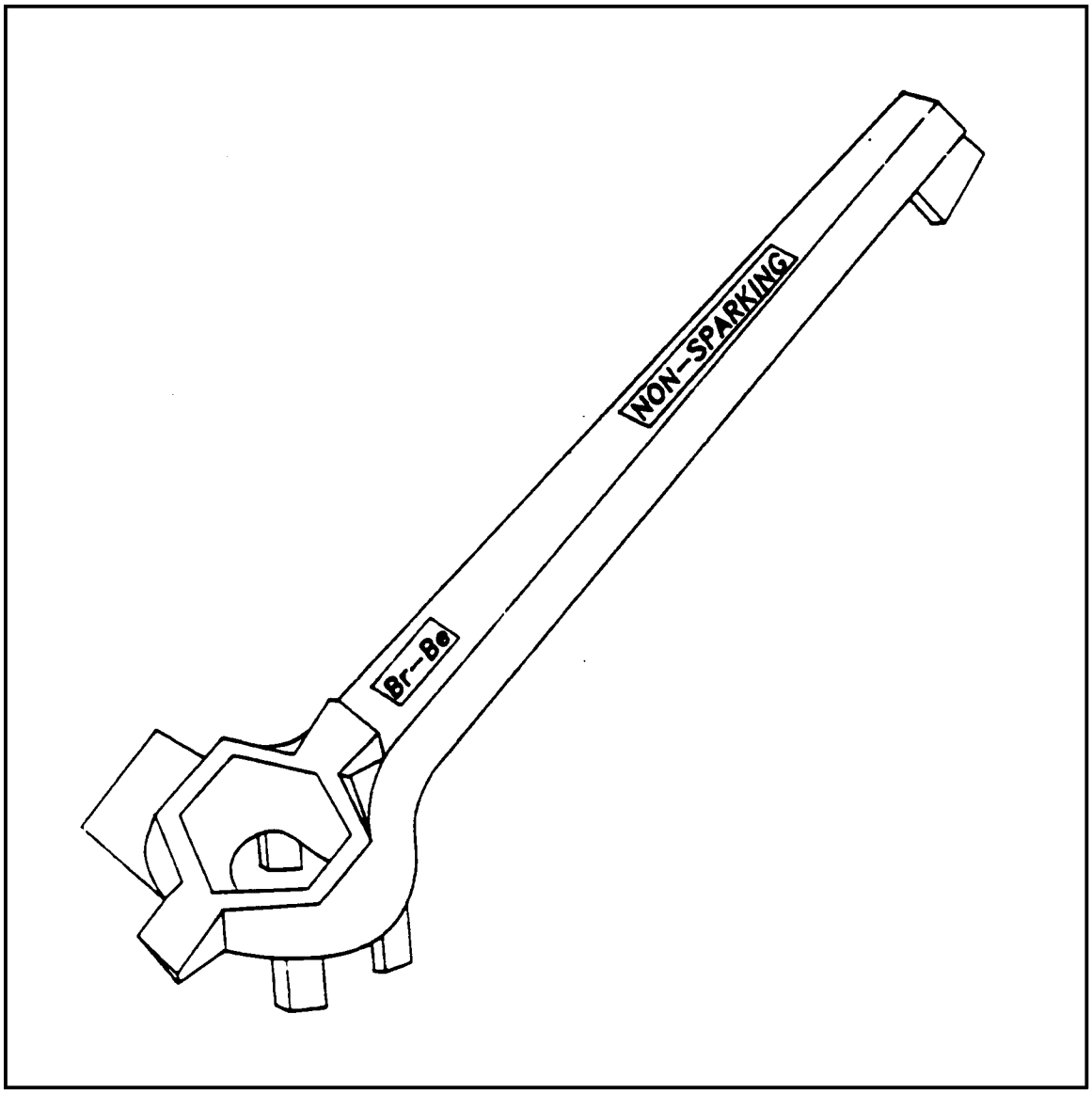

APPENDIX B (Cont'd)

Figures

Figure 2. Drum Deheader

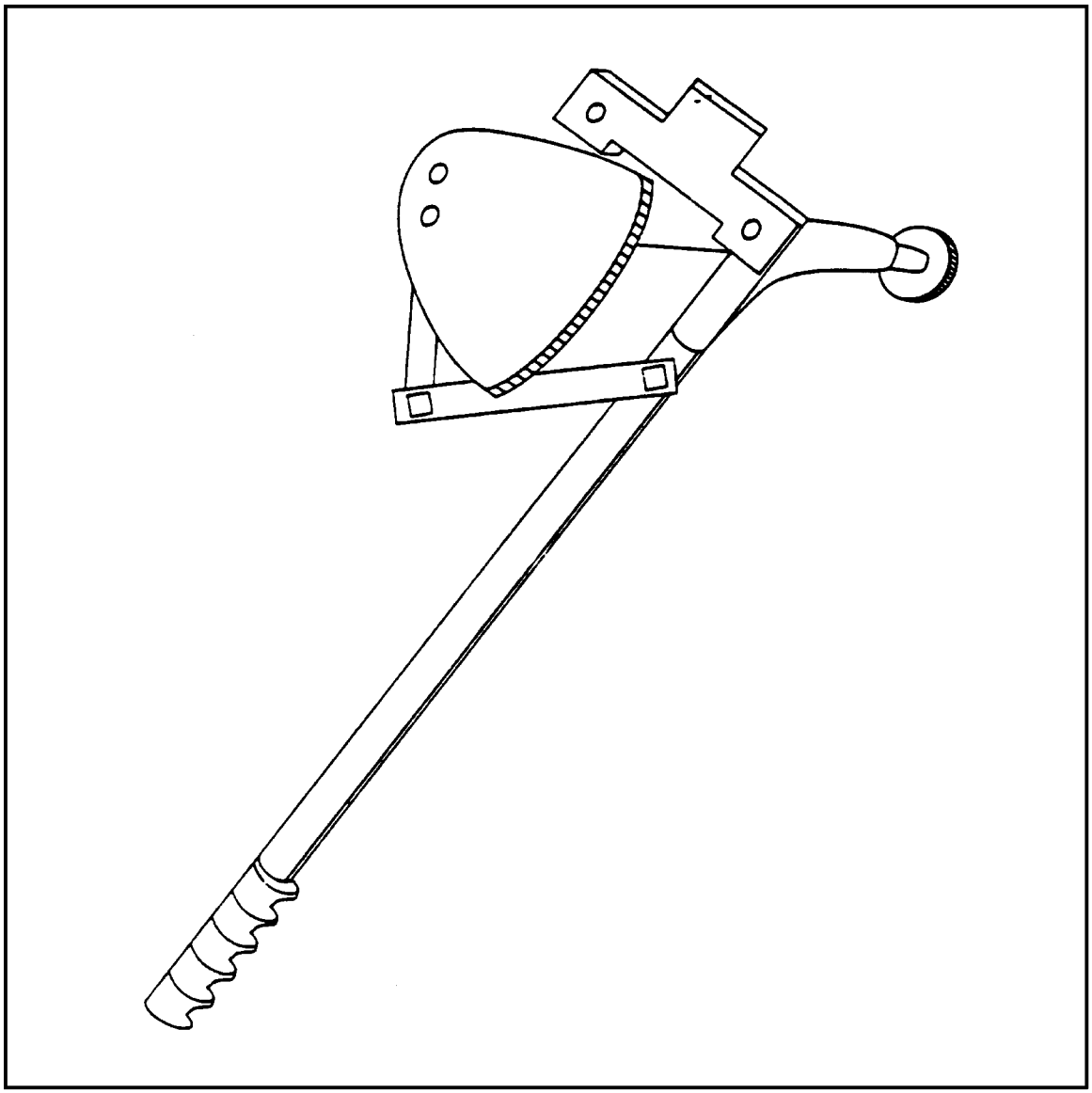

APPENDIX B (Cont'd)

Figures

Figure 3. Hand Pick, Pickaxe, and Hand Spike

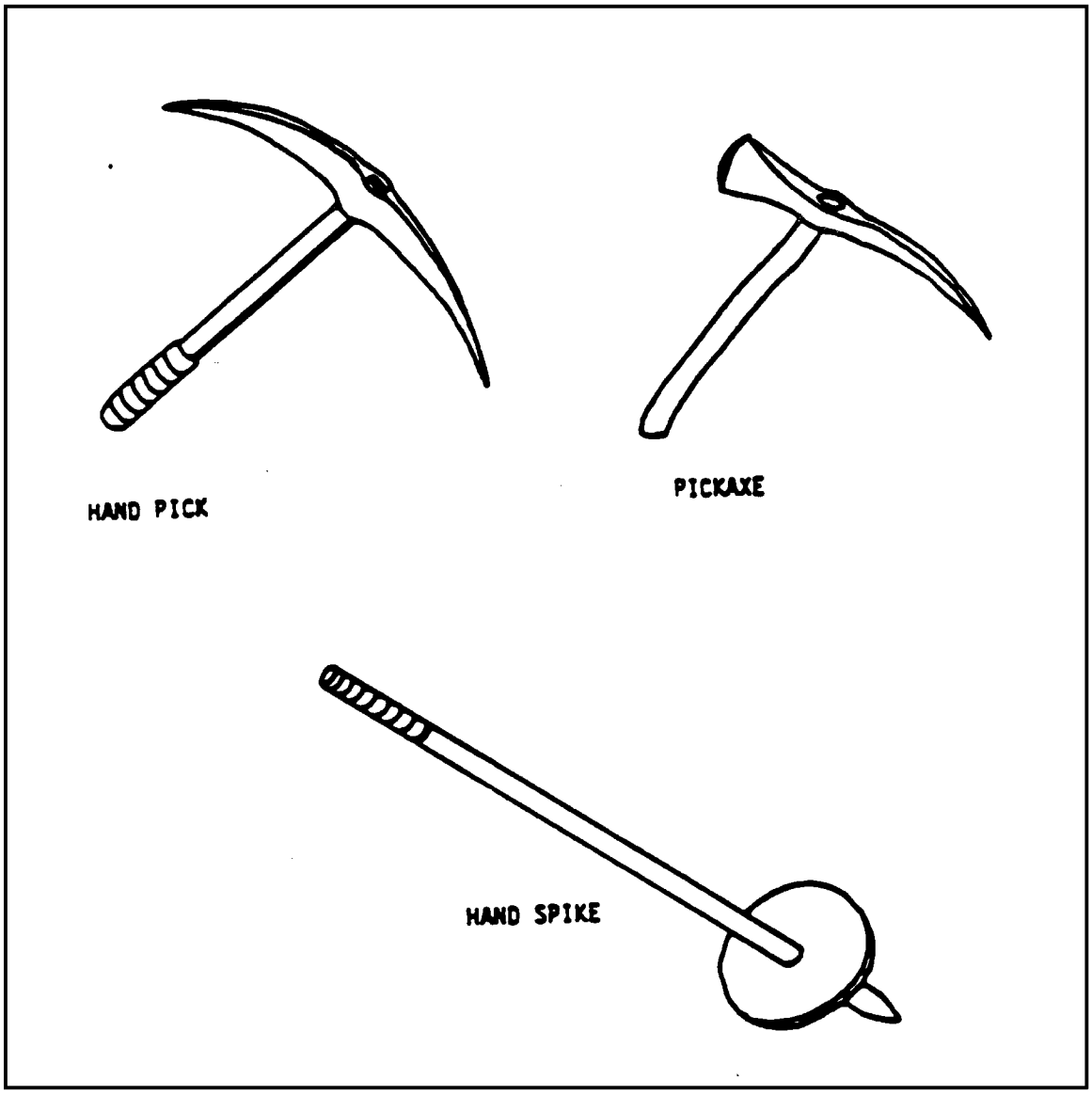

APPENDIX B (Cont'd)

Figures

Figure 4. Backhoe Spike

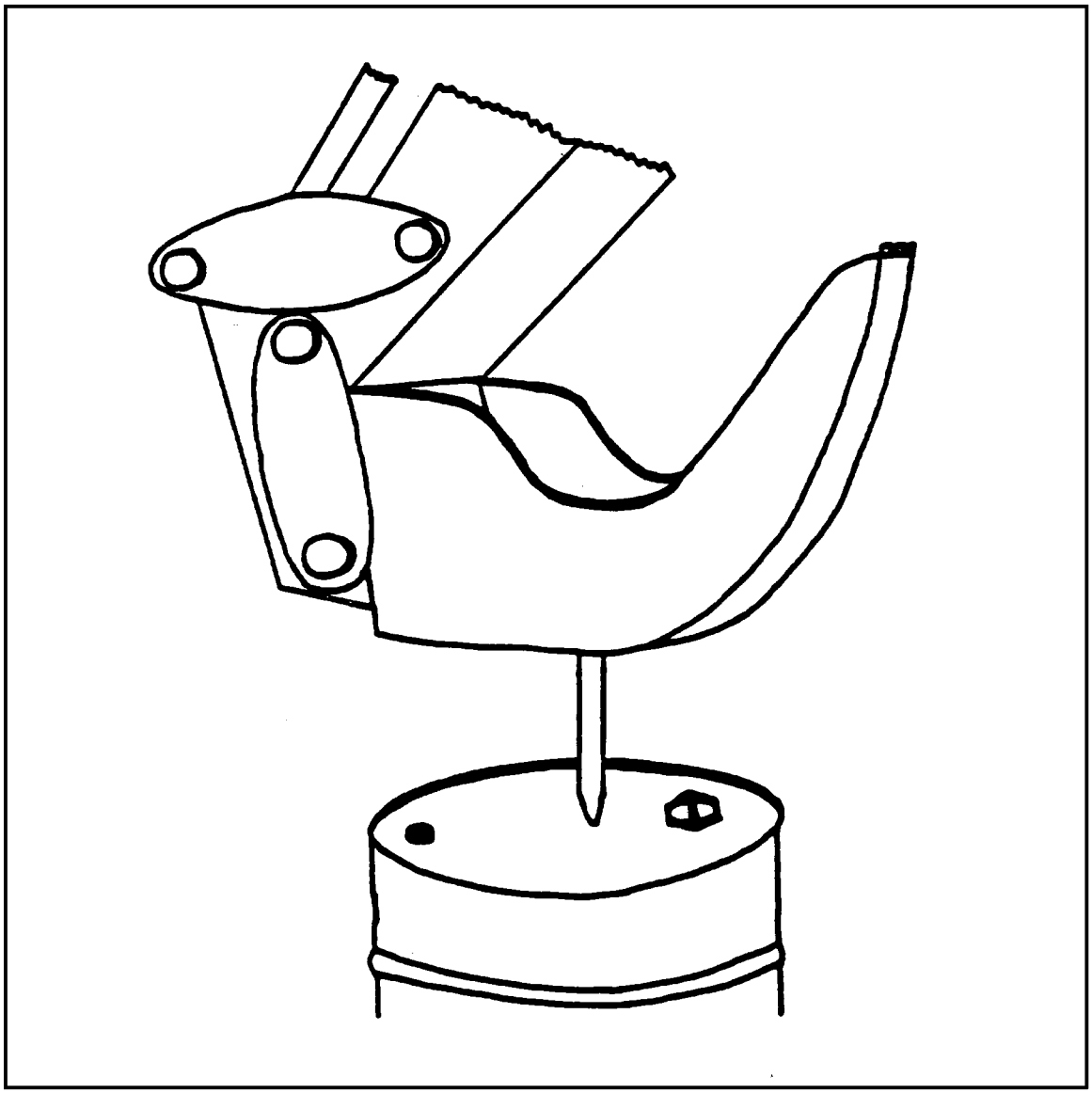

APPENDIX B (Cont'd)

Figures

Figure 5. Hydraulic Drum Opener

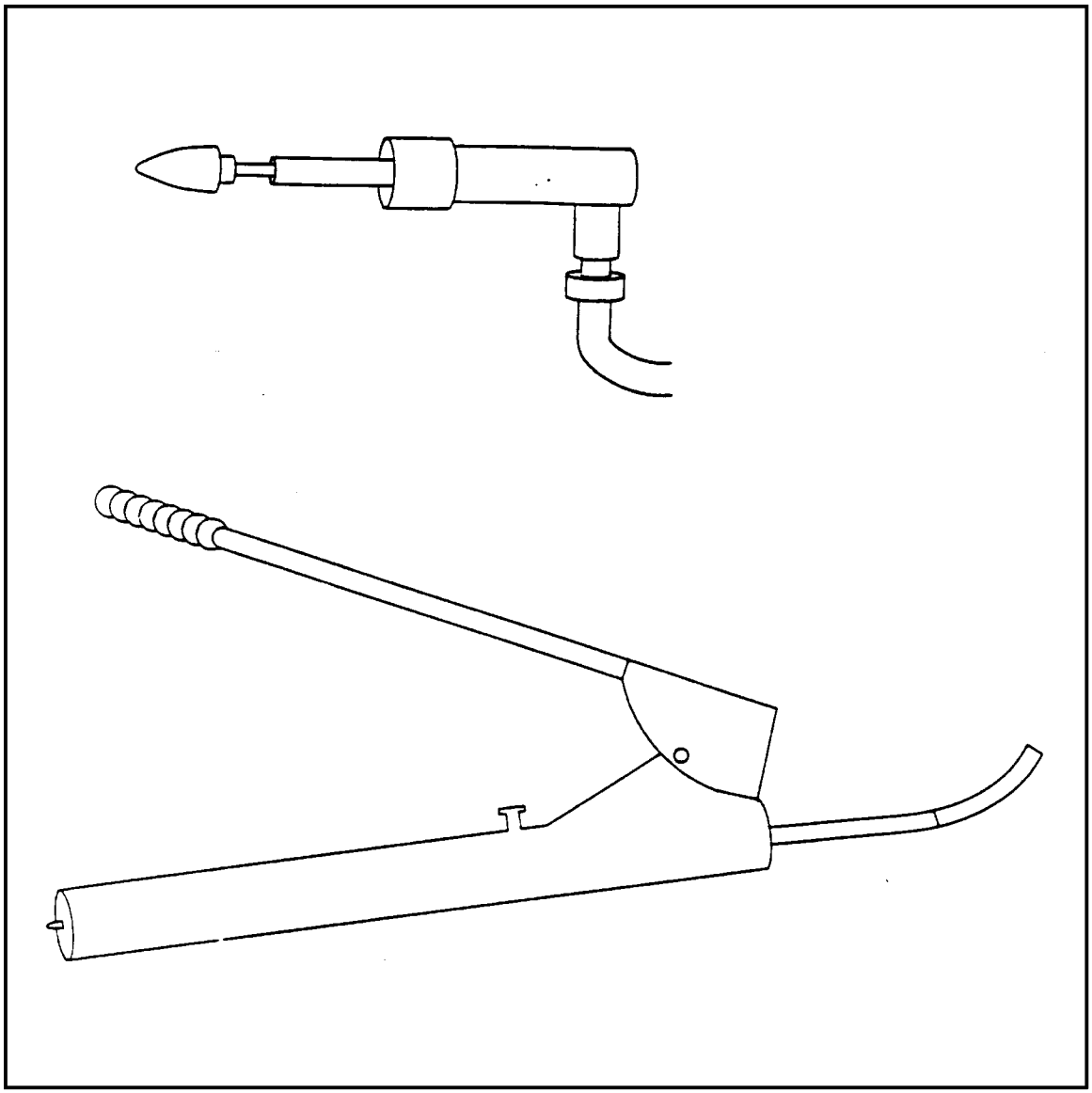

APPENDIX B (Cont'd)

Figures

Figure 6. Pneumatic Bung Remover

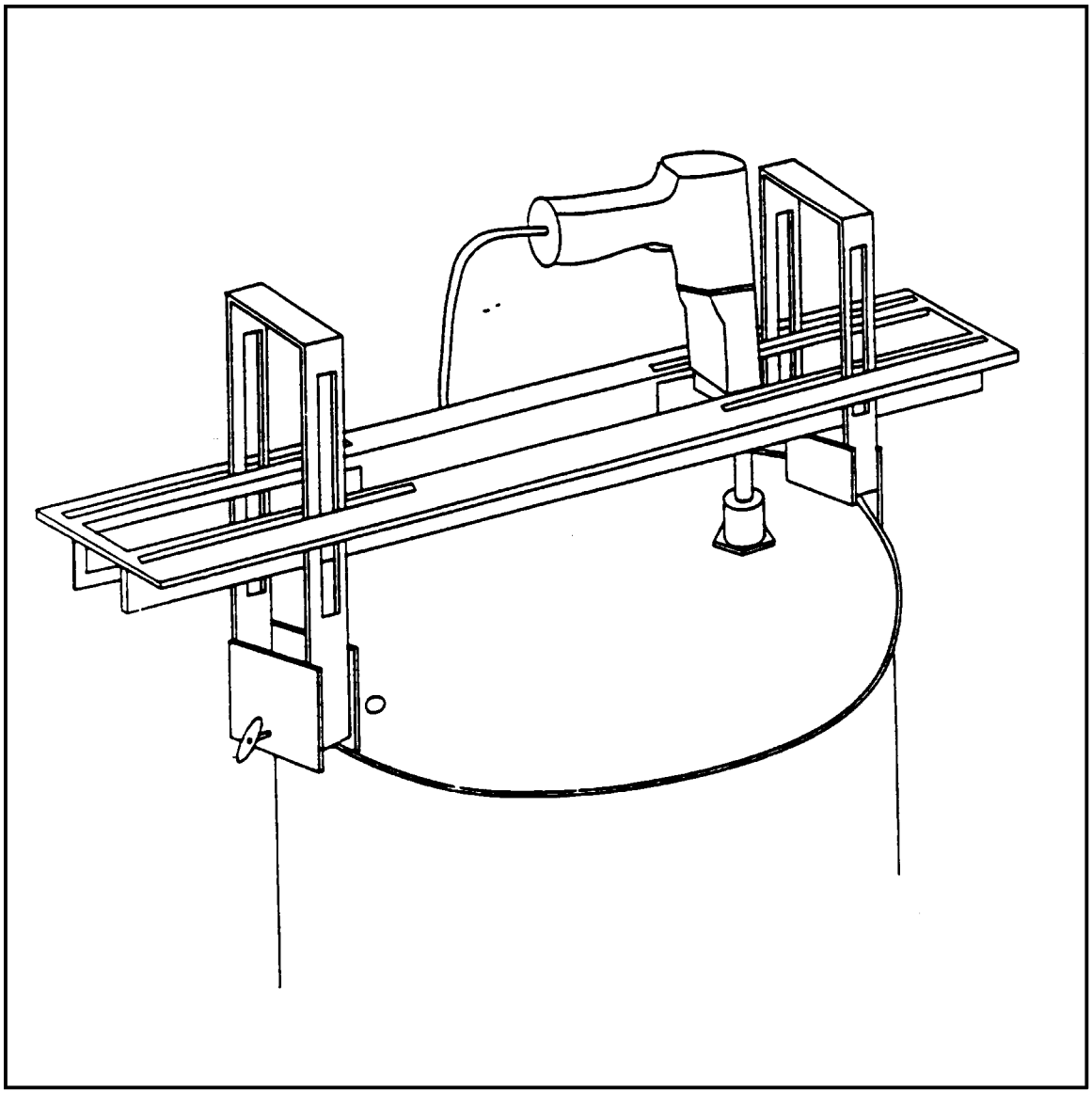

APPENDIX B (Cont'd)

Figures

Figure 7. Glass Thief

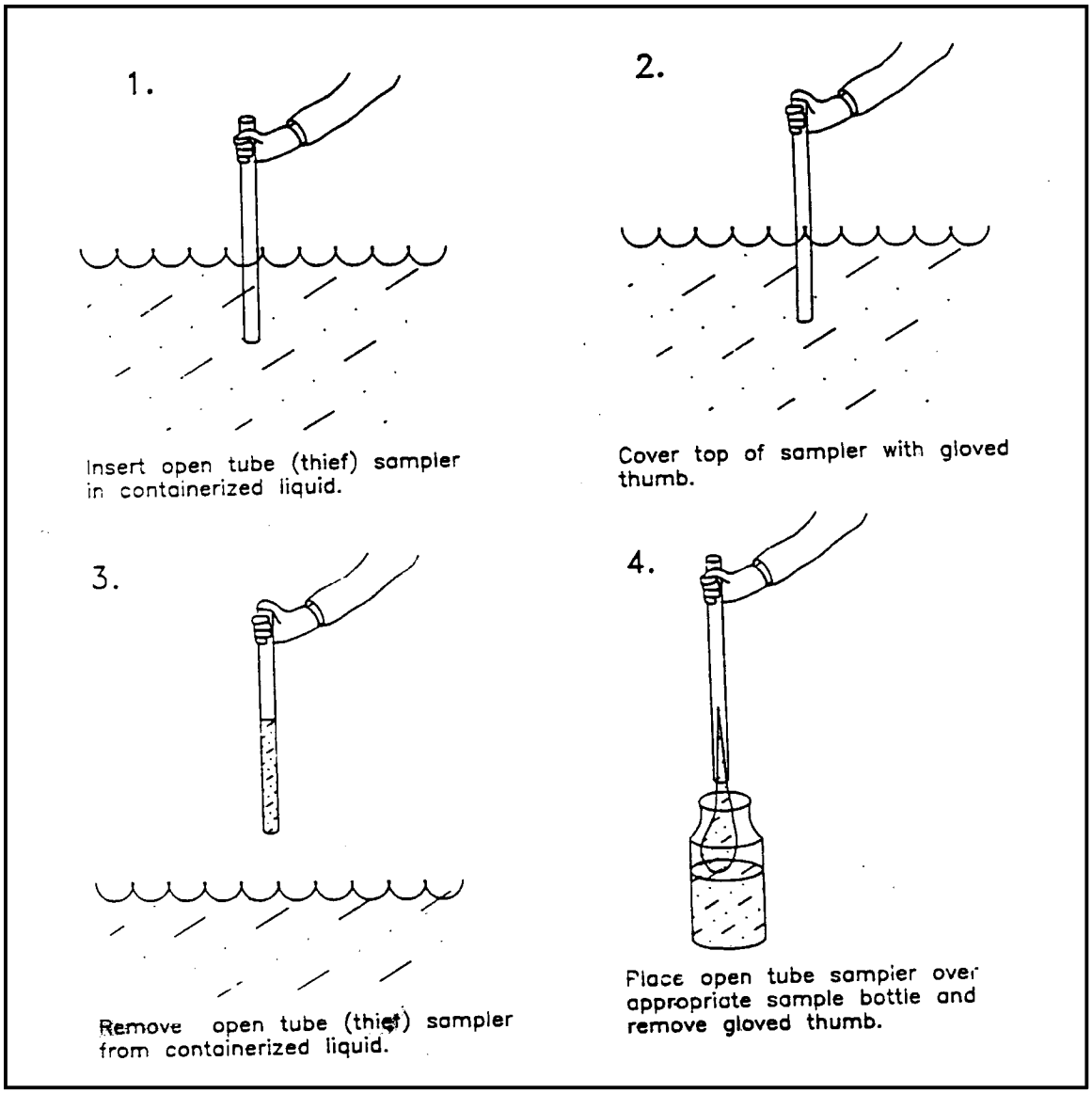

APPENDIX B (Cont'd)

Figures

Figure 8. COLIWASA

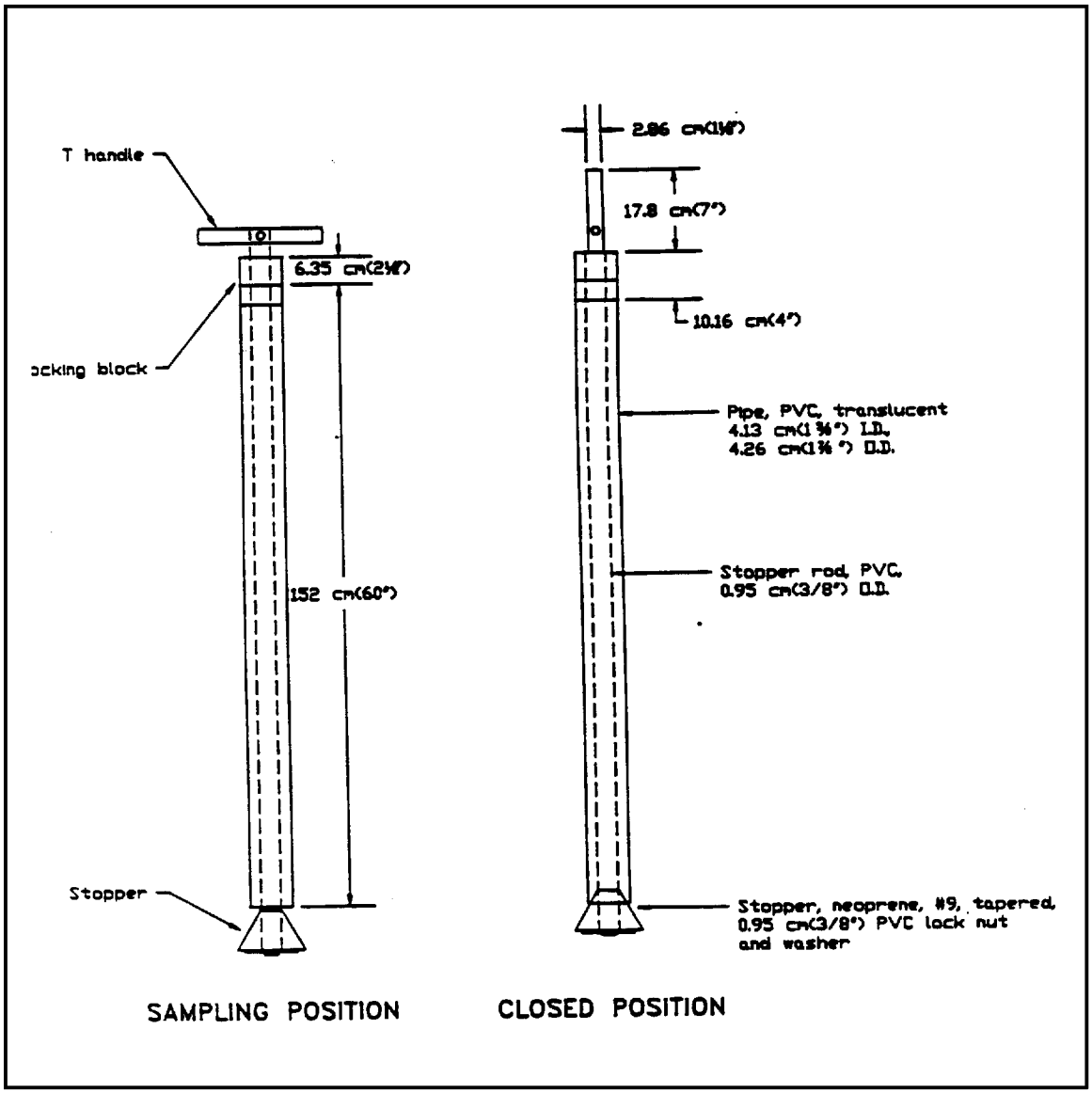

1.0 SCOPE AND APPLICATION

The purpose of this standard operating procedure (SOP) is to provide technical guidance for the implementation of sampling protocols for tanks and other confined spaces from outside the vessel.

These are standard (i.e., typically applicable) operating procedures which may be varied or changed as required, dependent on site conditions, equipment limitations or limitations imposed by the procedure or other procedure limitations. In all instances, the ultimate procedures employed should be documented and associated with the final report.

Mention of trade names or commercial products does not constitute U.S. EPA endorsement or recommendation for use.

2.0 METHOD SUMMARY

The safe collection of a representative sample should be the criteria for selecting sample locations. A representative sample can be collected using techniques or equipment that are designed for obtaining liquids or sludges from various depths. The structure and characteristics of storage tanks present problems with collection of samples from more than one location; therefore, the selection of sampling devices is an important consideration.

Depending on the type of vessel and characteristics of the material to be sampled, one can choose a bacon bomb sampler, sludge judge, subsurface grab sampler, glass thief, bailer or Composite Liquid Waste Sampler (COLIWASA) to collect the sample. A sludge judge, bacon bomb or COLIWASA can be used to determine if the tank contents are stratified. Various other custom-made samplers may be used depending on the specific application.

All sample locations should be surveyed for air quality prior to sampling. At no time should sampling continue with an LEL reading greater than 25%.

3.0 SAMPLE PRESERVATION, CONTAINERS, HANDLING, AND STORAGE

Samples collected from tanks are considered waste samples and as such, addition of preservatives is not required due to the potential reaction of the sample with the preservative. Samples should however, be cooled to 4°C with ice and protected from sunlight in order to minimize any potential reaction due to the light sensitivity of the sample.

Sample bottles for collection of waste liquids, sludges, or solids are typically wide mouth amber jars with Teflon-lined screw caps. Actual volume required for analysis should be determined in conjunction with the laboratory performing the analysis.

Waste sample handling procedures should be as follows:

1. Place sample container in two ziplock plastic bags.
2. Place each bagged container in a 1-gallon covered can containing absorbent packing material. Place the lid on the can.
3. Mark the sample identification number on the outside of the can.
4. Place the marked cans in a cooler, and fill remaining space with absorbent packing material.
5. Fill out chain of custody record for each cooler, place in plastic, and affix to inside lid of cooler.
6. Secure and custody seal the lid of cooler.

7. Arrange for the appropriate transportation mode consistent with the type of hazardous waste involved.

4.0 INTERFERENCES AND POTENTIAL PROBLEMS

Sampling a storage tank requires a great deal of manual dexterity, often requiring climbing to the top of the tank upon a narrow vertical or spiral stairway or ladder while wearing protective clothing and carrying sampling equipment.

Before climbing onto the vessel, a structural survey should be performed. This will ensure appropriate consideration of safety and accessibility prior to initiation of any field activities.

As in all opening of containers, extreme caution should be taken to avoid ignition or combustion of volatile contents. All tools used must be constructed of a non-sparking material and electronic instruments must be intrinsically safe.

All sample locations should be surveyed for air quality prior to sampling. At no time should sampling continue with a lower explosive limit (LEL) reading greater than 25%.

5.0 EQUIPMENT/APPARATUS

Storage tank materials include liquids, sludges, still bottoms, and solids of various types. The type of sampler chosen should be compatible with the waste. Samplers commonly used for tanks include: a bacon bomb sampler, sludge judge, glass thief, bailer, COLIWASA, and subsurface grab sampler.

Tank Sampling Equipment Checklist:

- C Sampling plan
- C Safety equipment
- C Tape measure
- C Weighted tape line, measuring stick or equivalent
- C Camera/film
- C Stainless steel bucket or bowl
- C Sample containers
- C Ziplock plastic bags
- C Logbook
- C Labels
- C Field data sheets
- C Chain of Custody records
- C Flashlight (explosion proof)
- C Coolers
- C Ice
- C Decontamination supplies
- C Bacon bomb sampler
- C Sludge judge
- C Glass thieves
- C Bailers
- C COLIWASA
- C Subsurface grab sampler
- C Water/oil level indicator
- C OVA (organic vapor analyzer or equivalent)
- C Explosimeter/oxygen meter
- C High volume blower

6.0 REAGENTS

Reagents are not typically required for the preservation of waste samples. However, reagents will be utilized for decontamination of equipment. Decontamination solutions required are specified in the Sampling Equipment Decontamination SOP.

7.0 PROCEDURE

7.1 Preparation

1. Determine the extent of the sampling effort, the sampling methods to be employed, and the types and amounts of equipment and supplies needed.

2. Obtain necessary sampling and monitoring equipment.

3. Decontaminate or preclean equipment, and ensure that it is in working order.

4. Prepare scheduling and coordinate with staff, clients, and regulatory agency, if appropriate.

5. Perform a general site survey prior to site entry in accordance with the site specific Health and Safety Plan.

6. Identify and mark all sampling locations.

7.2 Preliminary Inspection

1. Inspect the external structural characteristics of each tank and record in the site logbook.

Potential sampling points should be evaluated for safety, accessibility and sample quality.

2. Prior to opening a tank for internal inspection, the tank sampling team shall:

   - Review safety procedures and emergency contingency plans with the Health and Safety Officer.
   - Ensure that the tank is properly grounded.
   - Remove all sources of ignition from the immediate area.

3. Each tank should be mounted using appropriate means. Remove manway covers using non-sparking tools.

4. Collect air quality measurements for each potential sample location using an explosimeter/oxygen meter for a lower explosive limit (LEL/O_2) reading and an OVA/HNU for an organic vapor concentration. Both readings should be taken from the tank headspace, above the sampling port, and in the breathing zone.

5. Prior to commencing sampling, the tank headspace should be cleared of any toxic or explosive vapor concentration using a high volume explosion proof blower. No work shall start if LEL readings exceed 25%. At 10% LEL, work can continue but with extreme caution.

7.3 Sampling Procedure

1. Determine the depth of any and all liquid, solid, and liquid/solid interface, and depth of sludge using a weighted tape measure, probe line, sludge judge, or equivalent.

2. Collect liquid samples from one (1) foot below the surface, from mid-depth of liquid, and from one (1) foot above the bottom sludge layer. This can be accomplished with a subsurface grab sampler or bacon bomb. For liquids less than five (5) feet in depth, use a glass thief or COLIWASA to collect the sample.

   If sampling storage tanks, vacuum trucks, or process vessels, collect at least one sample from each compartment in the tank. Samples should always be collected through an opened hatch at the top of the tank. Valves near the bottom should not be used, because of their questionable or unknown integrity. If such a valve cannot be closed once opened, the entire tank contents may be lost to the ground surface. Also, individual strata cannot be sampled separately through a valve near the bottom.

3. Compare the three samples for visual phase differences. If phase differences appear, systematic iterative sampling should be performed. By halving the distance between two discrete sampling points, one can determine the depth of the phase change.

4. If another sampling port is available, sample as above to verify the phase information.

5. Measure the inside diameter of the tank and determine the volume of wastes using the depth measurements (Appendix A). Measuring the external diameter may be misleading as some tanks are insulated or have external supports that are covered.

6. Sludges can be collected using a bacon bomb sampler, glass thief, or sludge judge.

7. Record all information on the sample data sheet or site logbook. Label the container with the appropriate sample tag.

8. Decontaminate sampling equipment as per the steps listed in the Sampling Equipment Decontamination SOP.

7.4 Sampling Devices

7.4.1 Bacon Bomb Sampler

The bacon bomb sampler (Figure 1, Appendix B) is designed for the collection of material from various levels within a storage tank. It consists of a cylindrical body, usually made of chrome-plated brass and bronze with an internal tapered plunger that acts as a valve to admit the sample. A line attached to the top of the plunger opens and closes the valve. A line

is attached to the removable top cover which has a locking mechanism to keep the plunger closed after sampling.

Procedures for Use:

1. Attach the sample line and the plunger line to the sampler.

2. Measure and then mark the sampling line at the desired depth.

3. Gradually lower the sampler by the sample line until the desire level is reached.

4. When the desired level is reached, pull up on the plunger line and allow the sampler to fill before releasing the plunger line to seal off the sampler.

5. Retrieve the sampler by the sample line being careful not to pull up on the plunger line and thereby prevent accidental opening of the bottom valve.

6. Rinse or wipe off the exterior of the sampler body.

7. Position the sampler over the sample container and release its contents by pulling up on the plunger line.

8. Cap the sample container tightly and place prelabeled sample container in a carrier.

9. Replace the flange or manway or place plastic over the tank.

10. Log all samples in the site logbook and on field data sheets and label all samples.

11. Package samples and complete necessary paperwork.

12. Transport sample to decontamination zone for preparation for transport to analytical laboratory.

7.4.2 Sludge Judge

A sludge judge (Figure 2, Appendix B) is used for obtaining an accurate reading of settleable solids in any liquid. The sampling depth is dependent upon the length of the sludge judge. The sampler consists of 3/4" plastic pipe in 5-ft. sections, marked at 1-ft. increments, with screw-type fittings.

Procedures for Use:

1. Lower the sludge judge to the bottom of the tank.

2. When the bottom has been reached, the pipe is allowed to fill to the surface level. This will seat the check valve, trapping the column of material.

3. When the unit has been raised clear of the tank liquid, the amount of sludge in the sample can be read using the one foot increments marked on the pipe sections.

4. By touching the pin extending from the bottom section against a hard surface, the material is released from the unit.

5. Cap the sample container tightly and place prelabeled sample container in a carrier.

6. Replace the flange or manway or place plastic over the tank.

7. Log all samples in the site logbook and on field data sheets and label all samples.

8. Package samples and complete necessary paperwork.

9. Transport sample to decontamination zone for preparation for transport to analytical laboratory.

7.4.3 Subsurface Grab Sampler

Subsurface grab samplers (Figure 3, Appendix B) are designed to collect samples of liquids at various depths. The sampler is usually constructed of aluminum or stainless steel tubing with a polypropylene or teflon head that attaches to a 1-liter sample container.

Procedures for Use:

1. Screw the sample bottle onto the sampling head.

2. Lower the sampler to the desired depth.

3. Pull the ring at the top which opens the spring-loaded plunger in the head assembly.

4. When the bottle is full, release the ring, lift sampler, and remove sample bottle.

5. Cap the sample container tightly and place prelabeled sample container in a carrier.

6. Replace the flange or manway or place plastic over the tank.

7. Log all samples in the site logbook and on field data sheets and label all samples.

8. Package samples and complete necessary paperwork.

9. Transport sample to decontamination zone for preparation for transport to analytical laboratory.

7.4.4 Glass Thief

The most widely used implement for sampling is a glass tube commonly referred to as a glass thief (Figure 4, Appendix B). This tool is simple, cost effective, quick, and collects a sample without having to decontaminate. Glass thieves are typically 6mm to 16mm I.D. and 48 inches long.

Procedures for Use:

1. Remove cover from sample container.

2. Insert glass tubing almost to the bottom of the tank or until a solid layer is encountered. About one foot of tubing should extend above the drum.

3. Allow the waste in the tank to reach its natural level in the tube.

4. Cap the top of the sampling tube with a tapered stopper or thumb, ensuring liquid does not come into contact with stopper.

5. Carefully remove the capped tube from the tank and insert the uncapped end in the sample container. Do not spill liquid on the outside of the sample container.

6. Release stopper and allow the glass thief to drain until the container is approximately 2/3 full.

7. Remove tube from the sample container, break it into pieces and place the pieces in the tank.

8. Cap the sample container tightly and place prelabeled sample container in a carrier.

9. Replace the bung or place plastic over the tank.

10. Log all samples in the site logbook and on field data sheets and label all samples.

11. Package samples and complete necessary paperwork.

12. Transport sample to decontamination zone for preparation for transport to analytical laboratory.

In many instances a tank containing waste material will have a sludge layer on the bottom. Slow insertion of the sample tube down into this layer and then a gradual withdrawal will allow the sludge to act as a bottom plug to maintain the fluid in the tube. The plug can be gently removed and placed into the sample container by the use of a stainless steel lab spoon.

7.4.5 Bailer

The positive-displacement volatile sampling bailer (Figure 5, Appendix B) (by GPI) is perhaps the most appropriate for collection of water samples for volatile analysis. Other bailer types (messenger, bottom fill, etc.) are less desirable, but may be mandated by cost and site conditions. Generally, bailers can provide an acceptable sample, providing that the sampling personnel use extra care in the collection process.

Operation

1. Make sure clean plastic sheeting surrounds the tank.

2. Attach a line to the bailer.

3. Lower the bailer slowly and gently into the tank so as not to splash the bailer into the tank contents.

4. Allow the bailer to fill completely and retrieve the bailer from the tank.

5. Begin slowly pouring from the bailer.

6. Cap the sample container tightly and place prelabeled sample container in a carrier.

7. Replace the flange or manway or place plastic over the tank.

8. Log all samples in the site logbook and on field data sheets and label all samples.

9. Package samples and complete necessary paperwork.

10. Transport sample to decontamination zone for preparation for transport to analytical laboratory.

7.4.6 COLIWASA

Sampling devices are available that allow collection of a sample from the full depth of a tank and maintain its integrity in the transfer tube until delivery to the sample bottle. The sampling device is known as a Composite Liquid Waste Sampler (COLIWASA) (Figure 6, Appendix B). The COLIWASA is a much cited sampler designed to permit representative sampling of multiphase wastes from tanks and other containerized wastes.

One configuration consists of a 152 cm by 4 cm I.D. section of tubing with a neoprene stopper at one end attached by a rod running the length of the tube to a locking mechanism at the other end. Manipulation of the locking mechanism opens and closes the sampler by raising and lowering the neoprene stopper.

The major drawbacks associated with using a COLIWASA concern decontamination and costs. The sampler is difficult to decontaminate in the field, and its high cost in relation to alternative procedures (glass tubes) makes it an impractical throwaway item. Disposable COLIWASA's are a viable alternative. However, the COLIWASA is still the sampling device of choice for specific applications, especially in instances where a true representation of a multiphase waste is absolutely necessary.

Procedures for Use:

1. Put the sampler in the open position by placing the stopper rod handle in the T-position and pushing the rod down until the handle sits against the sampler's locking block.

2. Slowly lower the sampler into the liquid waste. Lower the sampler at a rate that permits the levels of the liquid inside and outside the sampler tube to be about the same. If the level of the liquid in the sample tube is lower than that outside the sampler, the sampling rate is too fast and will result in a non-representative sample.

3. When the sampler stopper hits the bottom of the waste container, push the sampler tube downward against the stopper to close the sampler. Lock the sampler in the closed position by turning the T-handle until it is upright and one end rests tightly on the locking block.

4. Slowly withdraw the sample from the waste container with one hand while wiping the sampler tube with a disposable cloth or rag with the other hand.

5. Carefully discharge the sample into a suitable sample container by slowly pulling the lower end of the T-handle away from the locking block while the lower end of the sampler is positioned in a sample container.

6. Cap the sample container tightly and place prelabeled sample container in a carrier.

7. Replace the bung or place plastic over the tank.

8. Log all samples in the site logbook and on field data sheets and label all samples.

9. Package samples and complete necessary paperwork.

10. Transport sample to decontamination zone for preparation for transport to analytical laboratory.

8.0 CALCULATIONS

There are no specific calculations for these procedures. Refer to Appendix A regarding calculations utilized in determining tank volumes.

9.0 QUALITY ASSURANCE/ QUALITY CONTROL

There are no specific quality assurance activities which apply to the implementation of these procedures. However, the following general QA procedures apply:

1. All data must be documented on field data sheets or within site logbooks.

2. All instrumentation must be operated in accordance with operating instructions as supplied by the manufacturer, unless otherwise specified in the work plan. Equipment checkout and calibration activities must occur prior to sampling/operation and they must be documented.

10.0 DATA VALIDATION

This section is not applicable to this SOP.

11.0 HEALTH AND SAFETY

When working with potentially hazardous materials, follow U.S. EPA, OSHA, and corporate health and safety procedures. More specifically, the hazards associated with tank sampling may cause bodily injury, illness, or death to the worker. Failure to recognize potential hazards of waste containers is the cause of most accidents. It should be assumed that the most unfavorable conditions exist, and that the danger of explosion and poisoning will be present. Hazards specific to tank sampling are:

1. Hazardous atmospheres which are either flammable, toxic, asphyxiating, or corrosive.

2. If activation of electrical or mechanical equipment would cause injury, each piece of equipment should be manually isolated to prevent inadvertent activation while workers are occupied.

3. Communication is of utmost importance between the sampling worker and the standby person to prevent distress or injury going unnoticed.

4. Proper procedures to evacuate a tank with forced air and grounding of equipment and tanks should be reviewed.

12.0 REFERENCES

Guidance Document for Cleanup of Surface Tank and Drum Sites, OSWER Directive 9380.0-3.

Drum Handling Practices at Hazardous Waste Sites, EPA-600/2-86-013.

APPENDIX A

Calculations

Various Volume Calculations

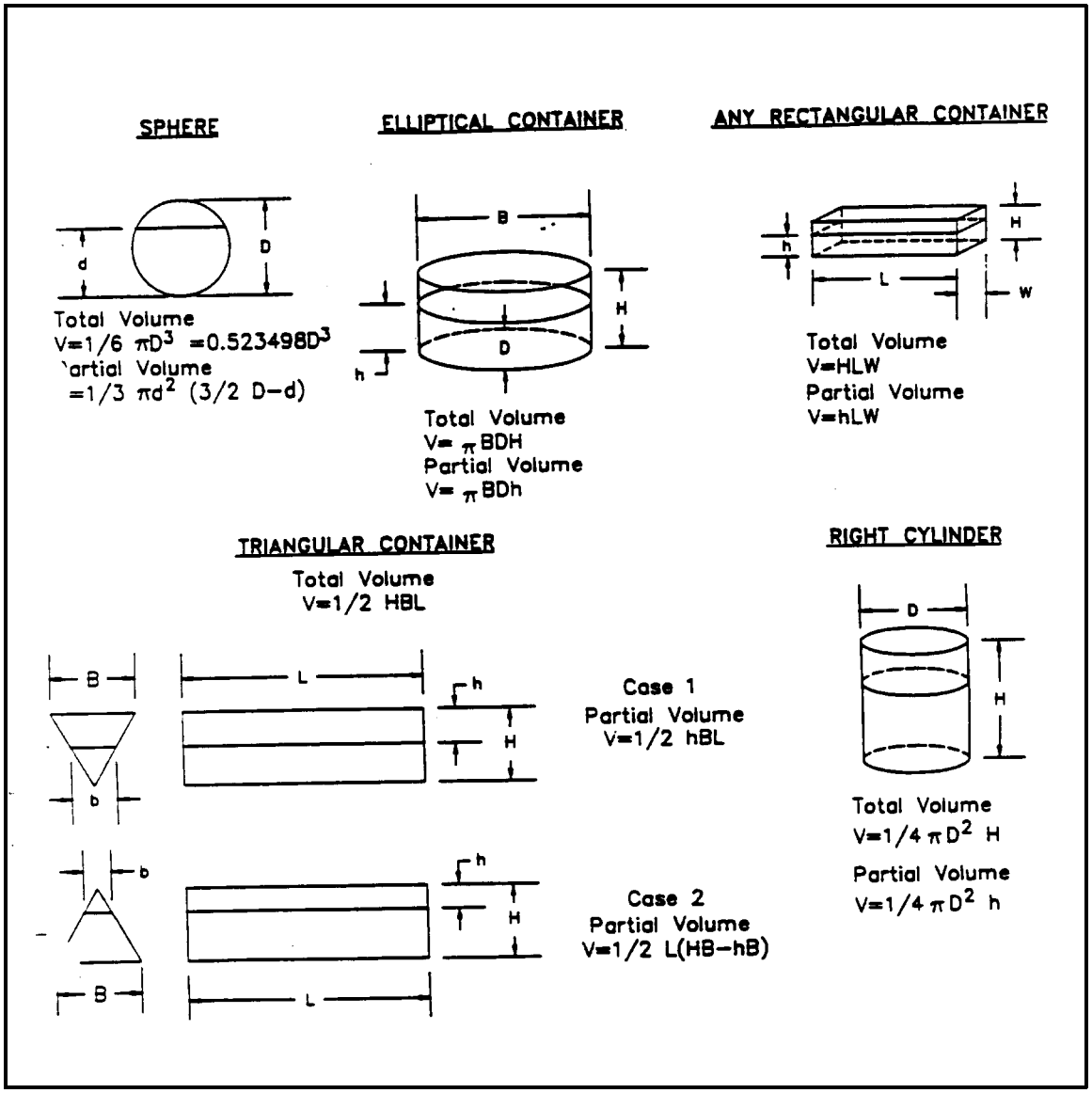

APPENDIX A (Cont'd)

Calculations

Various Volume Calculations (Cont'd)

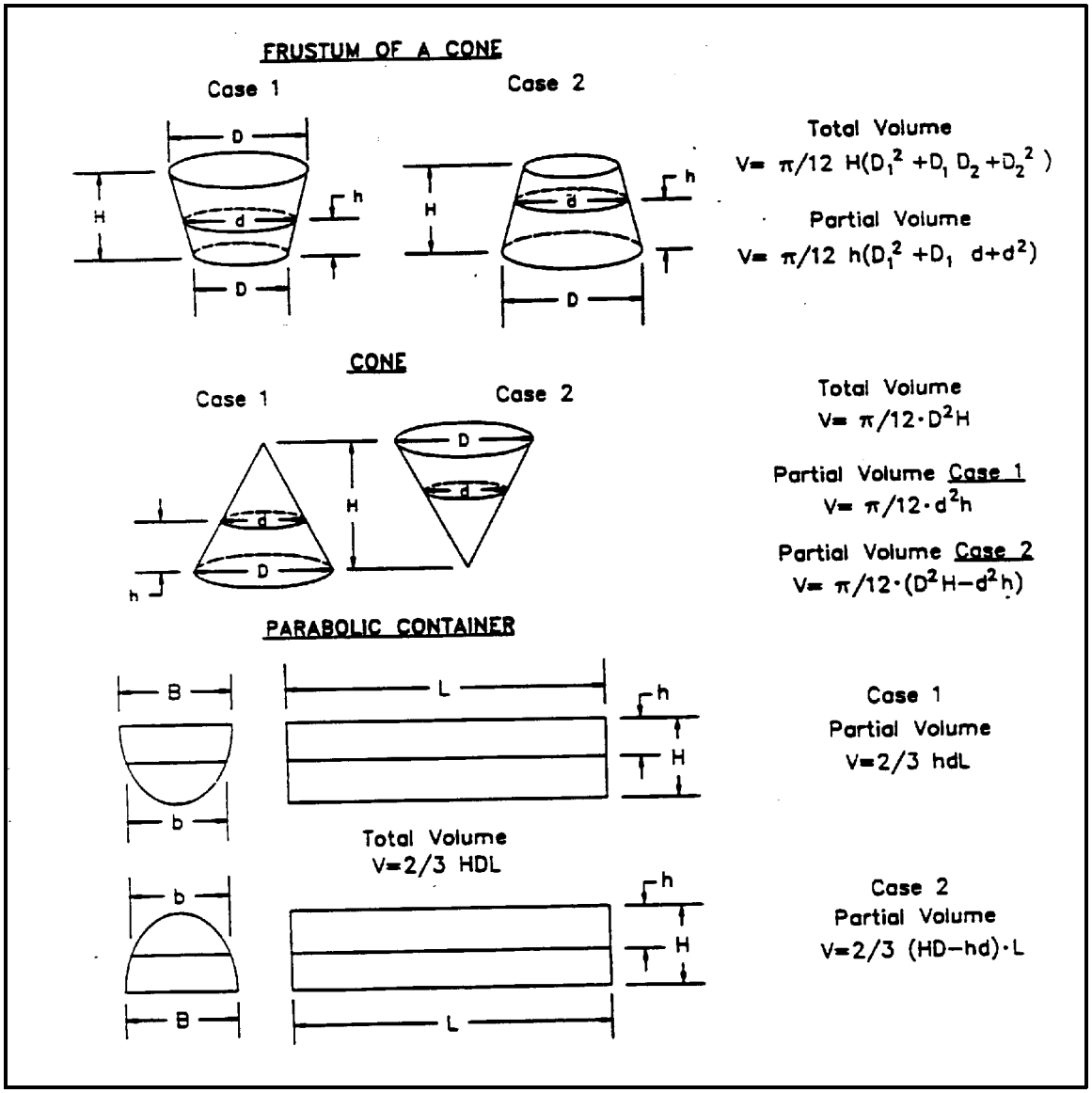

APPENDIX B

Figures

FIGURE 1. Bacon Bomb Sampler

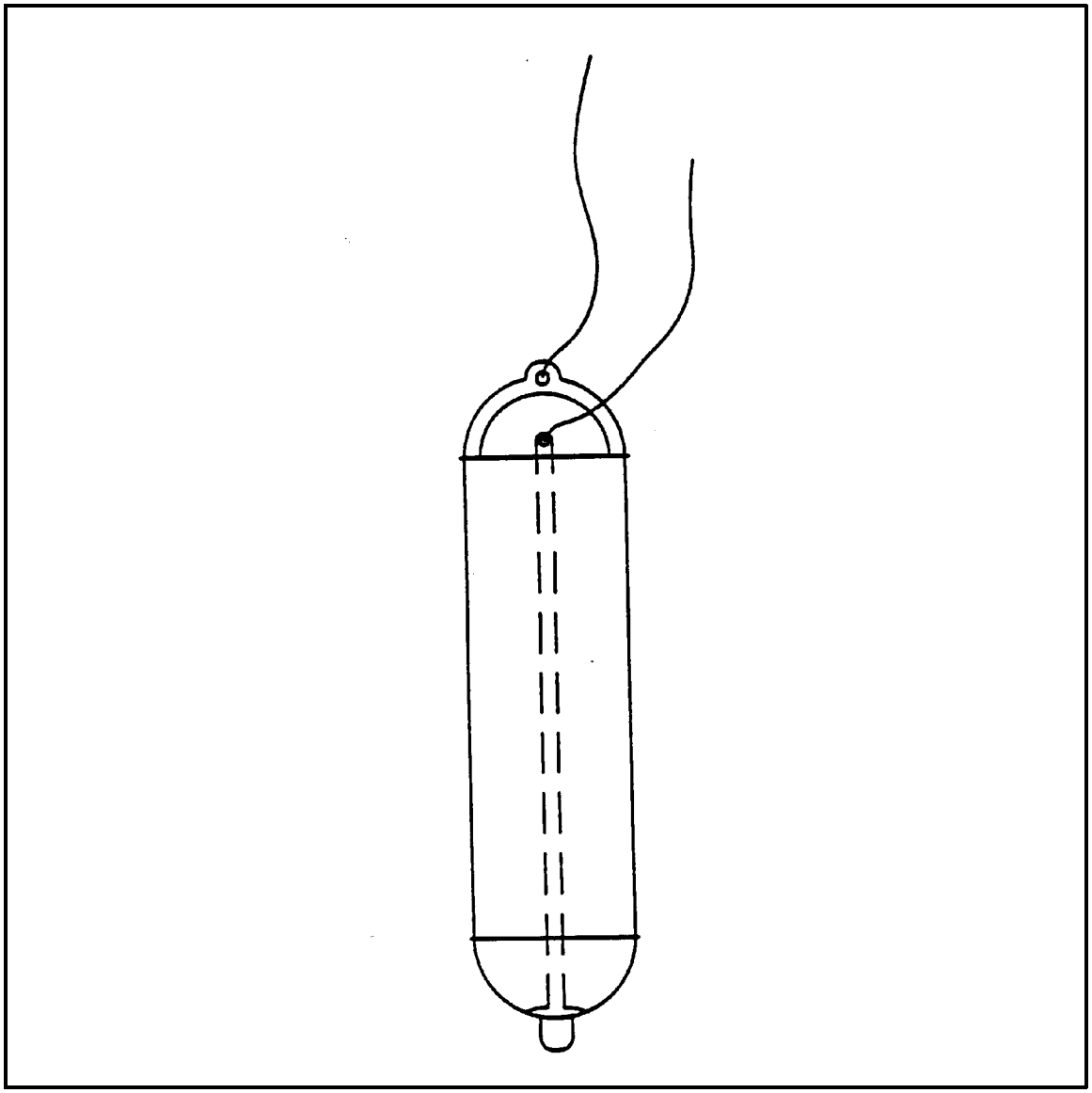

APPENDIX B (Cont'd)

Figures

FIGURE 2. Sludge Judge

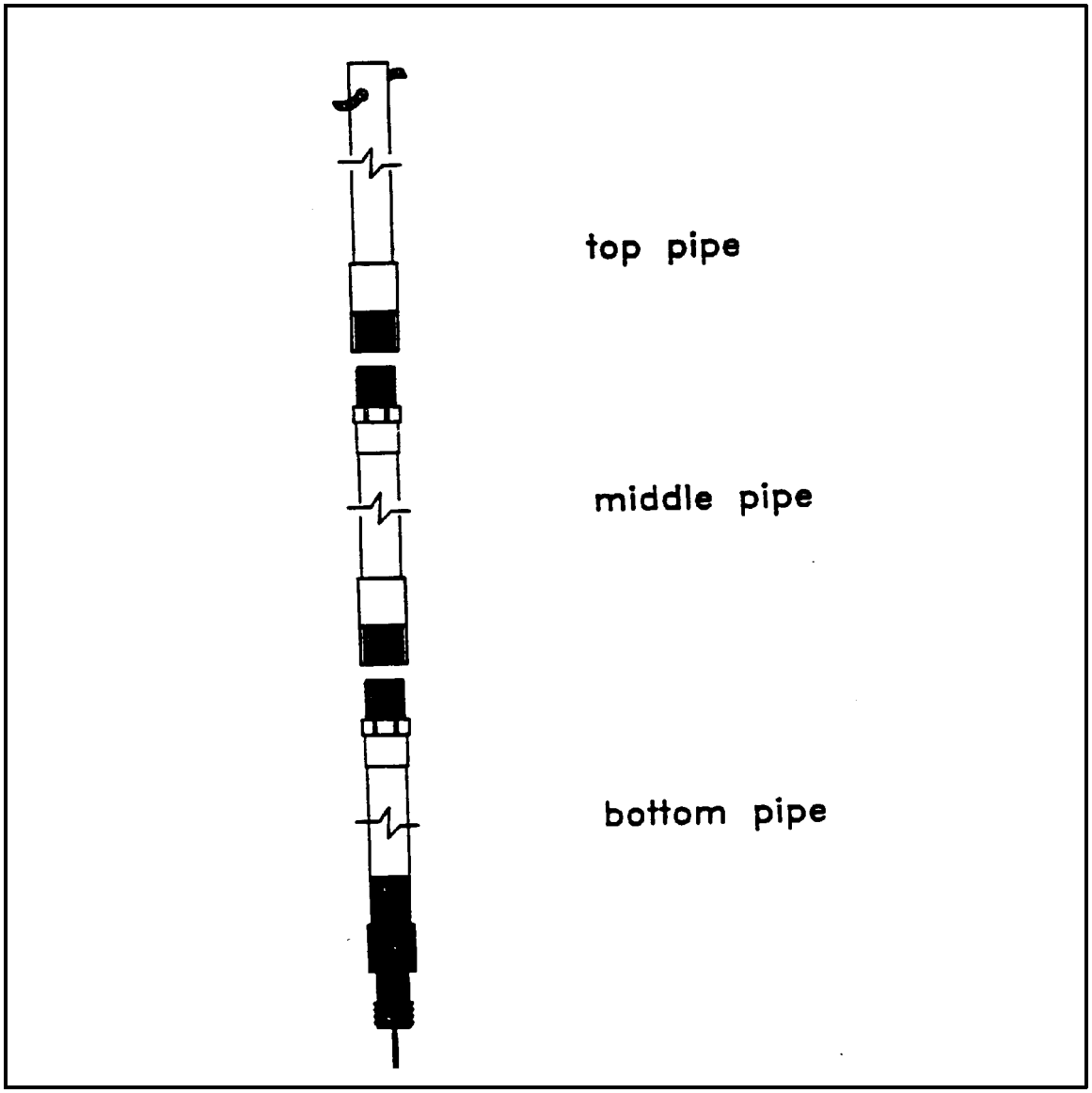

APPENDIX B (Cont'd)

Figures

FIGURE 3. Subsurface Grab Sampler

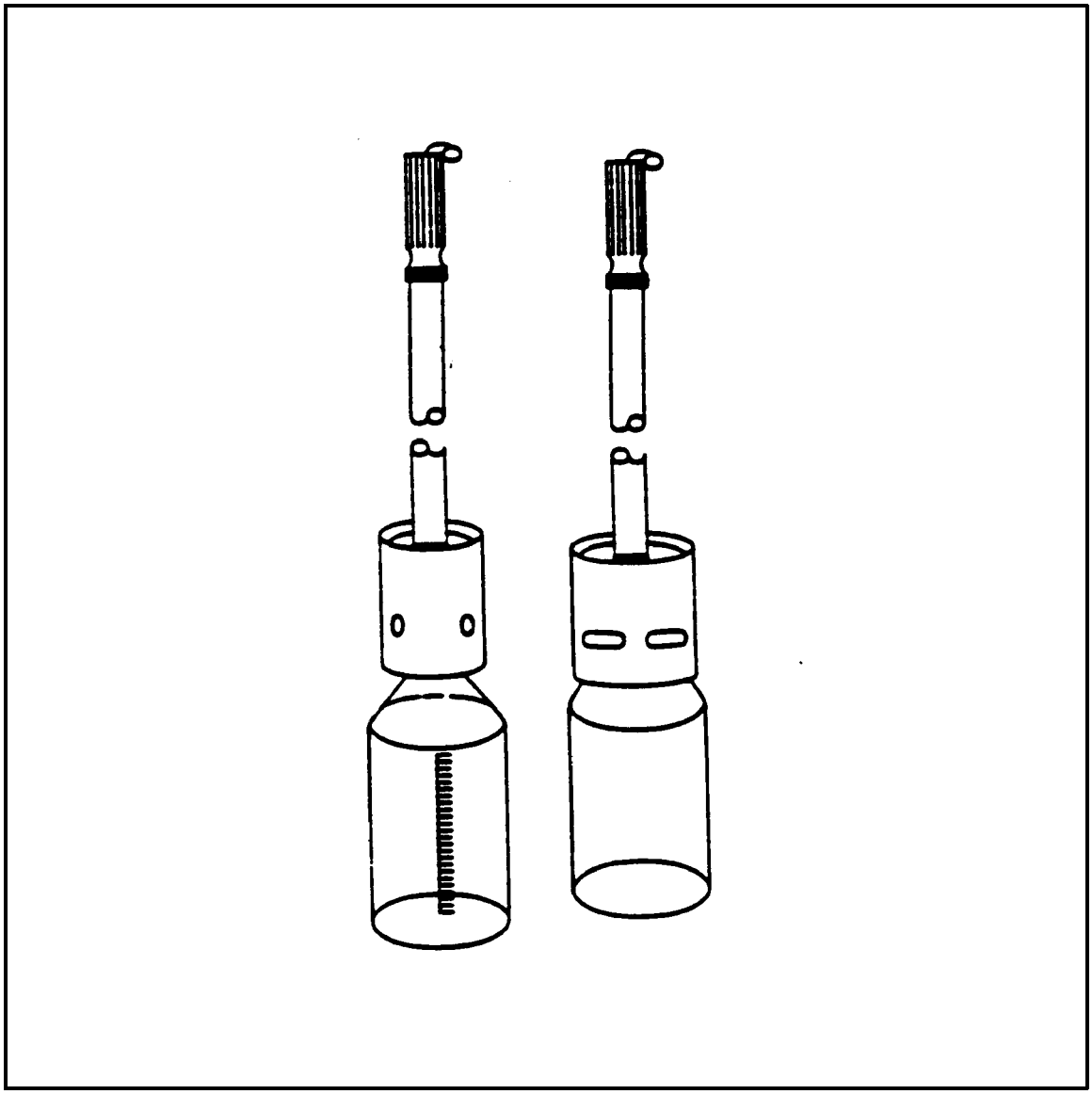

APPENDIX B (Cont'd)

Figures

FIGURE 4. Glass Thief

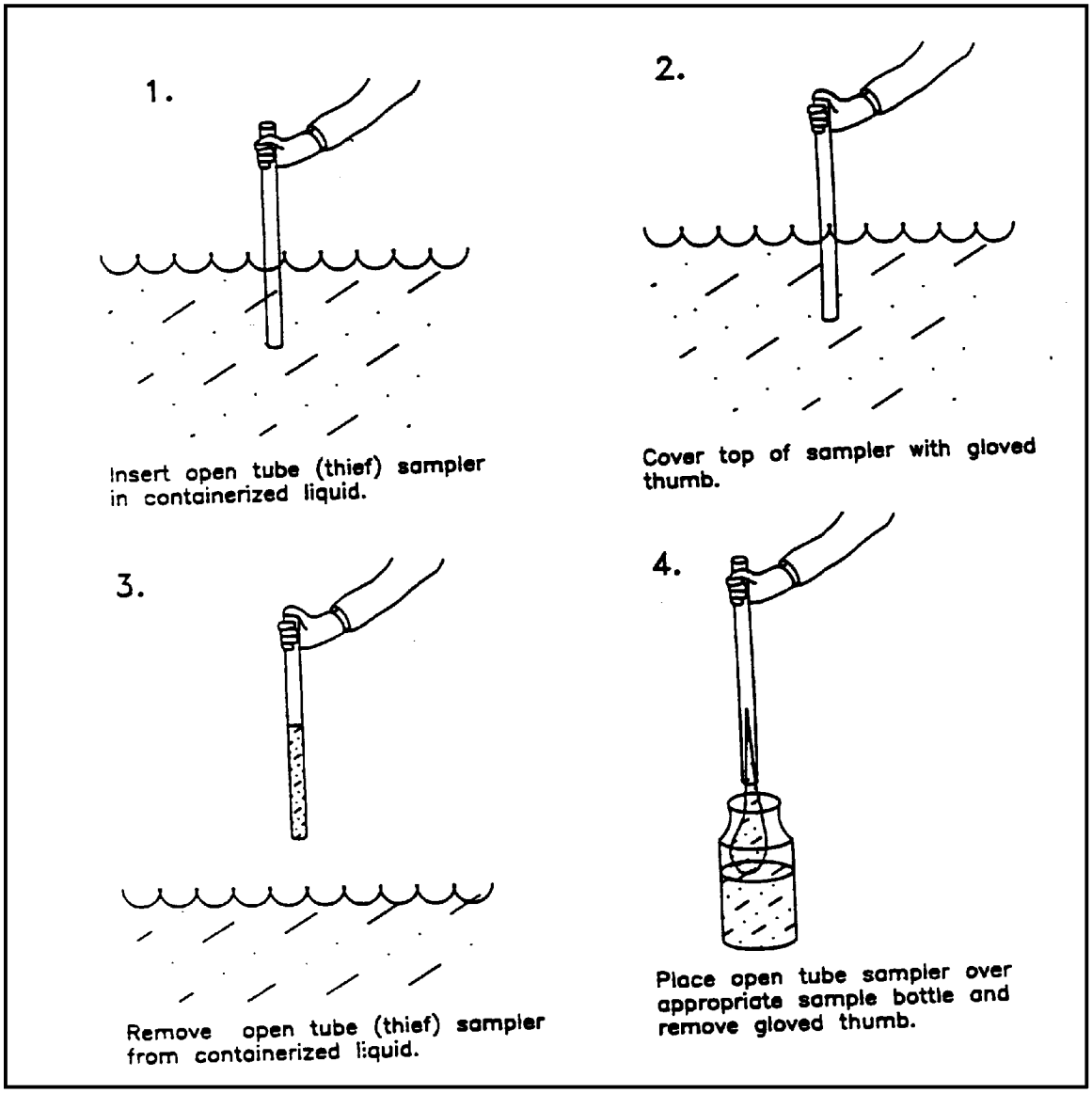

APPENDIX B (Cont'd)

Figures

FIGURE 5. Bailer

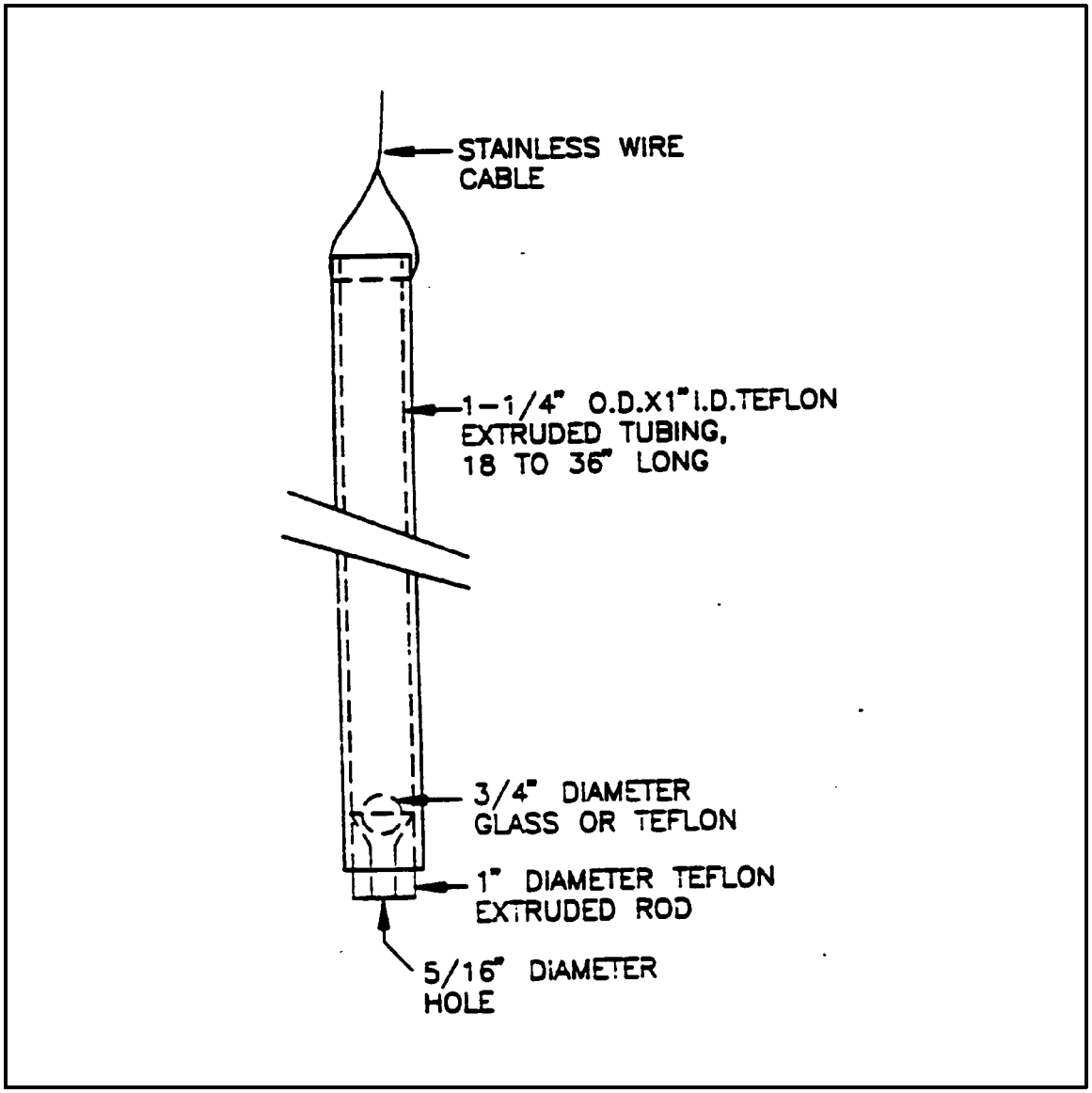

APPENDIX B (Cont'd)

Figures

FIGURE 6. COLIWASA

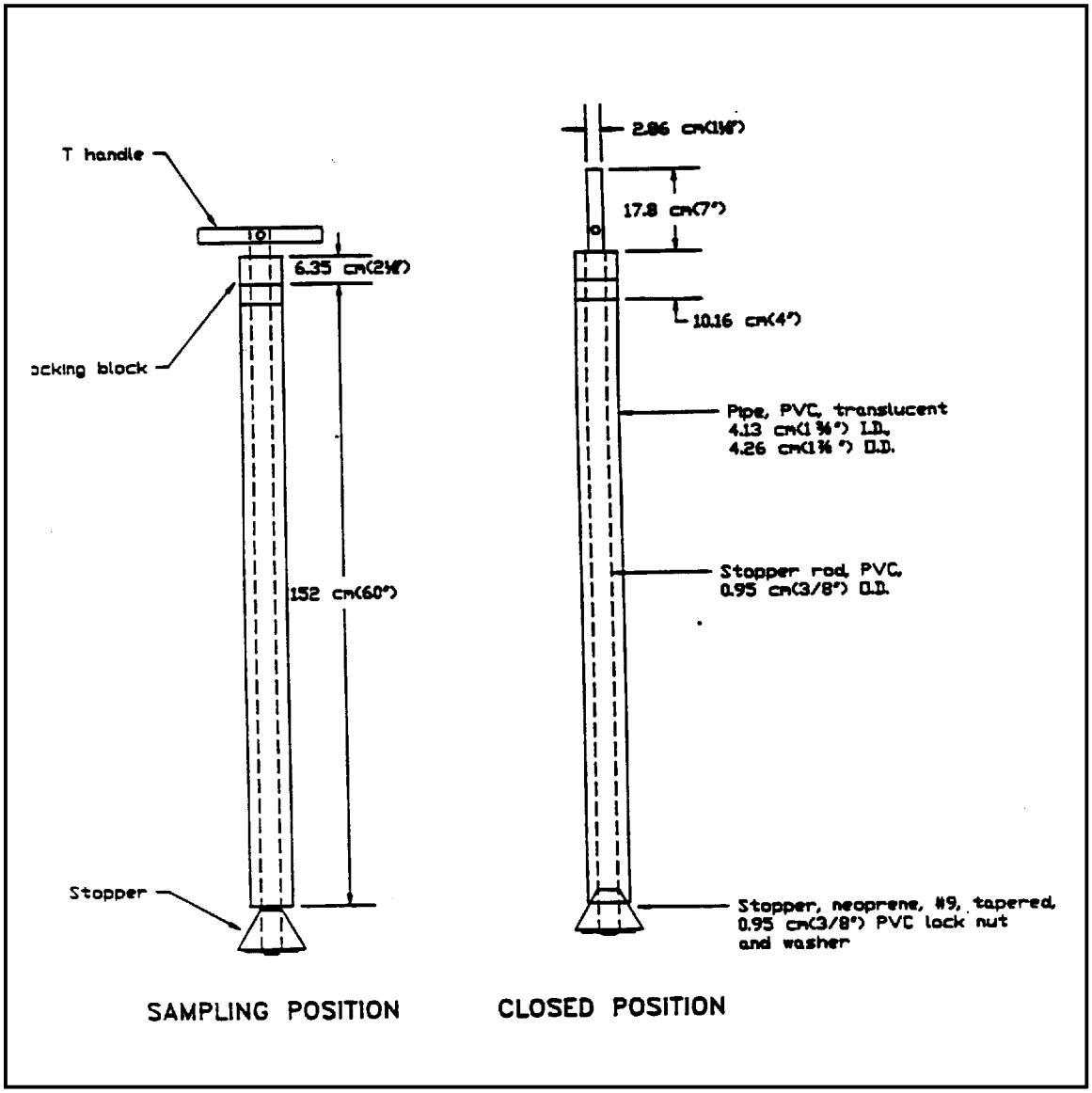

1.0 SCOPE AND APPLICATION

The purpose of this standard operating procedure (SOP) is to describe the procedures for the collection of representative soil samples. Analysis of soil samples may determine whether concentrations of specific pollutants exceed established action levels, or if the concentrations of pollutants present a risk to public health, welfare, or the environment.

These are standard (i.e., typically applicable) operating procedures which may be varied or changed as required, dependent upon site conditions, equipment limitations or limitations imposed by the procedure. In all instances, the ultimate procedures employed should be documented and associated with the final report.

Mention of trade names or commercial products does not constitute U.S. Environmental Protection Agency (EPA) endorsement or recommendation for use.

2.0 METHOD SUMMARY

Soil samples may be collected using a variety of methods and equipment. The methods and equipment used are dependent on the depth of the desired sample, the type of sample required (disturbed vs. undisturbed), and the soil type. Near-surface soils may be easily sampled using a spade, trowel, and scoop. Sampling at greater depths may be performed using a hand auger, continuous flight auger, a trier, a split-spoon, or, if required, a backhoe.

3.0 SAMPLE PRESERVATION, CONTAINERS, HANDLING, AND STORAGE

Chemical preservation of solids is not generally recommended. Samples should, however, be cooled and protected from sunlight to minimize any potential reaction.

4.0 INTERFERENCES AND POTENTIAL PROBLEMS

There are two primary interferences or potential problems associated with soil sampling. These include cross contamination of samples and improper sample collection. Cross contamination problems can be eliminated or minimized through the use of dedicated sampling equipment. If this is not possible or practical, then decontamination of sampling equipment is necessary. Improper sample collection can involve using contaminated equipment, disturbance of the matrix resulting in compaction of the sample or inadequate homogenization of the samples where required, resulting in variable, non-representative results.

5.0 EQUIPMENT/APPARATUS

Soil sampling equipment includes the following:

- Sampling plan
- Maps/plot plan
- Safety equipment, as specified in the Health and Safety Plan
- Survey equipment
- Tape measure
- Survey stakes or flags
- Camera and film
- Stainless steel, plastic, or other appropriate homogenization bucket, bowl or pan
- Appropriate size sample containers
- Ziplock plastic bags
- Logbook
- Labels
- Chain of Custody records and seals
- Field data sheets
- Cooler(s)
- Ice
- Vermiculite
- Decontamination supplies/equipment
- Canvas or plastic sheet
- Spade or shovel

- C Spatula
- C Scoop
- C Plastic or stainless steel spoons
- C Trowel
- C Continuous flight (screw) auger
- C Bucket auger
- C Post hole auger
- C Extension rods
- C T-handle
- C Sampling trier
- C Thin wall tube sampler
- C Split spoons
- C Vehimeyer soil sampler outfit
  - Tubes
  - Points
  - Drive head
  - Drop hammer
  - Puller jack and grip
- C Backhoe

6.0 REAGENTS

Reagents are not used for the preservation of soil samples. Decontamination solutions are specified in the Sampling Equipment Decontamination SOP and the site specific work plan.

7.0 PROCEDURES

7.1 Preparation

1. Determine the extent of the sampling effort, the sampling methods to be employed, and the types and amounts of equipment and supplies required.

2. Obtain necessary sampling and monitoring equipment.

3. Decontaminate or pre-clean equipment, and ensure that it is in working order.

4. Prepare schedules, and coordinate with staff, client, and regulatory agencies, if appropriate.

5. Perform a general site survey prior to site entry in accordance with the site specific Health and Safety Plan.

6. Use stakes, flagging, or buoys to identify and mark all sampling locations. Specific site factors, including extent and nature of contaminant should be considered when selecting sample location. If required, the proposed locations may be adjusted based on site access, property boundaries, and surface obstructions. All staked locations will be utility-cleared by the property owner prior to soil sampling.

7.2 Sample Collection

7.2.1 Surface Soil Samples

Collection of samples from near-surface soil can be accomplished with tools such as spades, shovels, trowels, and scoops. Surface material can be removed to the required depth with this equipment, then a stainless steel or plastic scoop can be used to collect the sample.

This method can be used in most soil types but is limited to sampling near surface areas. Accurate, representative samples can be collected with this procedure depending on the care and precision demonstrated by the sample team member. A stainless steel scoop, lab spoon, or plastic spoon will suffice in most other applications. The use of a flat, pointed mason trowel to cut a block of the desired soil can be helpful when undisturbed profiles are required. Care should be exercised to avoid use of devices plated with chrome or other materials. Plating is particularly common with garden implements such as potting trowels.

The following procedure is used to collect surface soil samples:

1. Carefully remove the top layer of soil or debris to the desired sample depth with a pre-cleaned spade.

2. Using a pre-cleaned, stainless steel scoop, plastic spoon, or trowel, remove and discard a thin layer of soil from the area which came in contact with the spade.

3. If volatile organic analysis is to be performed, transfer the sample directly into an appropriate, labeled sample container with a stainless steel lab spoon, or equivalent and secure the cap tightly. Place the remainder of the sample into a stainless steel, plastic, or

other appropriate homogenization container, and mix thoroughly to obtain a homogenous sample representative of the entire sampling interval. Then, either place the sample into appropriate, labeled containers and secure the caps tightly; or, if composite samples are to be collected, place a sample from another sampling interval or location into the homogenization container and mix thoroughly. When compositing is complete, place the sample into appropriate, labeled containers and secure the caps tightly.

7.2.2 Sampling at Depth with Augers and Thin Wall Tube Samplers

This system consists of an auger, or a thin-wall tube sampler, a series of extensions, and a "T" handle (Figure 1, Appendix A). The auger is used to bore a hole to a desired sampling depth, and is then withdrawn. The sample may be collected directly from the auger. If a core sample is to be collected, the auger tip is then replaced with a thin wall tube sampler. The system is then lowered down the borehole, and driven into the soil to the completion depth. The system is withdrawn and the core is collected from the thin wall tube sampler.

Several types of augers are available; these include: bucket type, continuous flight (screw), and post-hole augers. Bucket type augers are better for direct sample recovery since they provide a large volume of sample in a short time. When continuous flight augers are used, the sample can be collected directly from the flights. The continuous flight augers are satisfactory for use when a composite of the complete soil column is desired. Post-hole augers have limited utility for sample collection as they are designed to cut through fibrous, rooted, swampy soil and cannot be used below a depth of three feet.

The following procedure will be used for collecting soil samples with the auger:

1. Attach the auger bit to a drill rod extension, and attach the "T" handle to the drill rod.

2. Clear the area to be sampled of any surface debris (e.g., twigs, rocks, litter). It may be advisable to remove the first three to six inches of surface soil for an area approximately six inches in radius around the drilling location.

3. Begin augering, periodically removing and depositing accumulated soils onto a plastic sheet spread near the hole. This prevents accidental brushing of loose material back down the borehole when removing the auger or adding drill rods. It also facilitates refilling the hole, and avoids possible contamination of the surrounding area.

4. After reaching the desired depth, slowly and carefully remove the auger from boring. When sampling directly from the auger, collect the sample after the auger is removed from the boring and proceed to Step 10.

5. Remove auger tip from drill rods and replace with a pre-cleaned thin wall tube sampler. Install the proper cutting tip.

6. Carefully lower the tube sampler down the borehole. Gradually force the tube samplerinto soil. Care should be taken to avoid scraping the borehole sides. Avoid hammering the drill rods to facilitate coring as the vibrations may cause the boring walls to collapse.

7. Remove the tube sampler, and unscrew the drill rods.

8. Remove the cutting tip and the core from the device.

9. Discard the top of the core (approximately 1 inch), as this possibly represents material collected before penetration of the layer of concern. Place the remaining core into the appropriate labeled sample container. Sample homogenization is not required.

10. If volatile organic analysis is to be performed, transfer the sample into an appropriate, labeled sample container with a stainless steel lab spoon, or equivalent and secure the cap tightly. Place the remainder of the sample into a stainless steel, plastic, or other appropriate homogenization container, and mix thoroughly to obtain a homogenous sample representative of the entire sampling interval. Then, either place the sample into appropriate, labeled containers and secure the

caps tightly; or, if composite samples are to be collected, place a sample from another sampling interval into the homogenization container and mix thoroughly.

When compositing is complete, place the sample into appropriate, labeled containers and secure the caps tightly.

11. If another sample is to be collected in the same hole, but at a greater depth, reattach the auger bit to the drill and assembly, and follow steps 3 through 11, making sure to decontaminate the auger and tube sampler between samples.

12. Abandon the hole according to applicable State regulations. Generally, shallow holes can simply be backfilled with the removed soil material.

7.2.3 Sampling at Depth with a Trier

The system consists of a trier, and a "T" handle. The auger is driven into the soil to be sampled and used to extract a core sample from the appropriate depth.

The following procedure will be used to collect soil samples with a sampling trier:

1. Insert the trier (Figure 2, Appendix A) into the material to be sampled at a 0° to 45° angle from horizontal. This orientation minimizes the spillage of sample.

2. Rotate the trier once or twice to cut a core of material.

3. Slowly withdraw the trier, making sure that the slot is facing upward.

4. If volatile organic analysis is to be performed, transfer the sample into an appropriate, labeled sample container with a stainless steel lab spoon, or equivalent and secure the cap tightly. Place the remainder of the sample into a stainless steel, plastic, or other appropriate homogenization container, and mix thoroughly to obtain a homogenous sample representative of the entire sampling interval. Then, either place the sample into appropriate, labeled containers and secure the caps tightly; or, if composite samples are to be collected, place a sample from another sampling interval into the homogenization container and mix thoroughly. When compositing is complete, place the sample into appropriate, labeled containers and secure the caps tightly.

7.2.4 Sampling at Depth with a Split Spoon (Barrel) Sampler

The procedure for split spoon sampling describes the collection and extraction of undisturbed soil cores of 18 or 24 inches in length. A series of consecutive cores may be extracted with a split spoon sampler to give a complete soil column profile, or an auger may be used to drill down to the desired depth for sampling. The split spoon is then driven to its sampling depth through the bottom of the augured hole and the core extracted.

When split spoon sampling is performed to gain geologic information, all work should be performed in accordance with ASTM D 1586-67 (reapproved 1974).

The following procedures will be used for collecting soil samples with a split spoon:

1. Assemble the sampler by aligning both sides of barrel and then screwing the drive shoe on the bottom and the head piece on top.

2. Place the sampler in a perpendicular position on the sample material.

3. Using a well ring, drive the tube. Do not drive past the bottom of the head piece or compression of the sample will result.

4. Record in the site logbook or on field data sheets the length of the tube used to penetrate the material being sampled, and the number of blows required to obtain this depth.

5. Withdraw the sampler, and open by unscrewing the bit and head and splitting the barrel. The amount of recovery and soil type should be recorded on the boring log. If a split sample is desired, a cleaned, stainless steel knife should be used to divide the tube contents in half, longitudinally. This sampler

is typically available in 2 and 3 1/2 inch diameters. However, in order to obtain the required sample volume, use of a larger barrel may be required.

6. Without disturbing the core, transfer it to appropriate labeled sample container(s) and seal tightly.

7.2.5 Test Pit/Trench Excavation

These relatively large excavations are used to remove sections of soil, when detailed examination of soil characteristics (horizontal, structure, color, etc.) are required. It is the least cost effective sampling method due to the relatively high cost of backhoe operation.

The following procedures will be used for collecting soil samples from test pit/trench excavations:

1. Prior to any excavation with a backhoe, it is important to ensure that all sampling locations are clear of utility lines, subsurface pipes and poles (subsurface as well as above surface).

2. Using the backhoe, a trench is dug to approximately three feet in width and approximately one foot below the cleared sampling location. Place excavated soils on plastic sheets. Trenches greater than five feet deep must be sloped or protected by a shoring system, as required by OSHA regulations.

3. A shovel is used to remove a one to two inch layer of soil from the vertical face of the pit where sampling is to be done.

4. Samples are taken using a trowel, scoop, or coring device at the desired intervals. Be sure to scrape the vertical face at the point of sampling to remove any soil that may have fallen from above, and to expose fresh soil for sampling. In many instances, samples can be collected directly from the backhoe bucket.

5. If volatile organic analysis is to be performed, transfer the sample into an appropriate, labeled sample container with a stainless steel lab spoon, or equivalent and secure the cap tightly. Place the remainder of the sample into a stainless steel, plastic, or other appropriate homogenization container, and mix thoroughly to obtain a homogenous sample representative of the entire sampling interval. Then, either place the sample into appropriate, labeled containers and secure the caps tightly; or, if composite samples are to be collected, place a sample from another sampling interval into the homogenization container and mix thoroughly. When compositing is complete, place the sample into appropriate, labeled containers and secure the caps tightly.

6. Abandon the pit or excavation according to applicable state regulations. Generally, shallow excavations can simply be backfilled with the removed soil material.

8.0 CALCULATIONS

This section is not applicable to this SOP.

9.0 QUALITY ASSURANCE/ QUALITY CONTROL

There are no specific quality assurance (QA) activities which apply to the implementation of these procedures. However, the following QA procedures apply:

1. All data must be documented on field data sheets or within site logbooks.

2. All instrumentation must be operated in accordance with operating instructions as supplied by the manufacturer, unless otherwise specified in the work plan. Equipment checkout and calibration activities must occur prior to sampling/operation, and they must be documented.

10.0 DATA VALIDATION

This section is not applicable to this SOP.

11.0 HEALTH AND SAFETY

When working with potentially hazardous materials, follow U.S. EPA, OHSA and corporate health and safety procedures.

12.0 REFERENCES

Mason, B.J., Preparation of Soil Sampling Protocol: Technique and Strategies. 1983 EPA-600/4-83-020.

Barth, D.S. and B.J. Mason, Soil Sampling Quality Assurance User's Guide. 1984 EPA-600/4-84-043.

U.S. EPA. Characterization of Hazardous Waste Sites - A Methods Manual: Volume II. Available Sampling Methods, Second Edition. 1984 EPA-600/4-84-076.

de Vera, E.R., B.P. Simmons, R.D. Stephen, and D.L. Storm. Samplers and Sampling Procedures for Hazardous Waste Streams. 1980 EPA-600/2-80-018.

ASTM D 1586-67 (reapproved 1974), ASTM Committee on Standards, Philadelphia, PA.

APPENDIX A

Figures

FIGURE 1. Sampling Augers

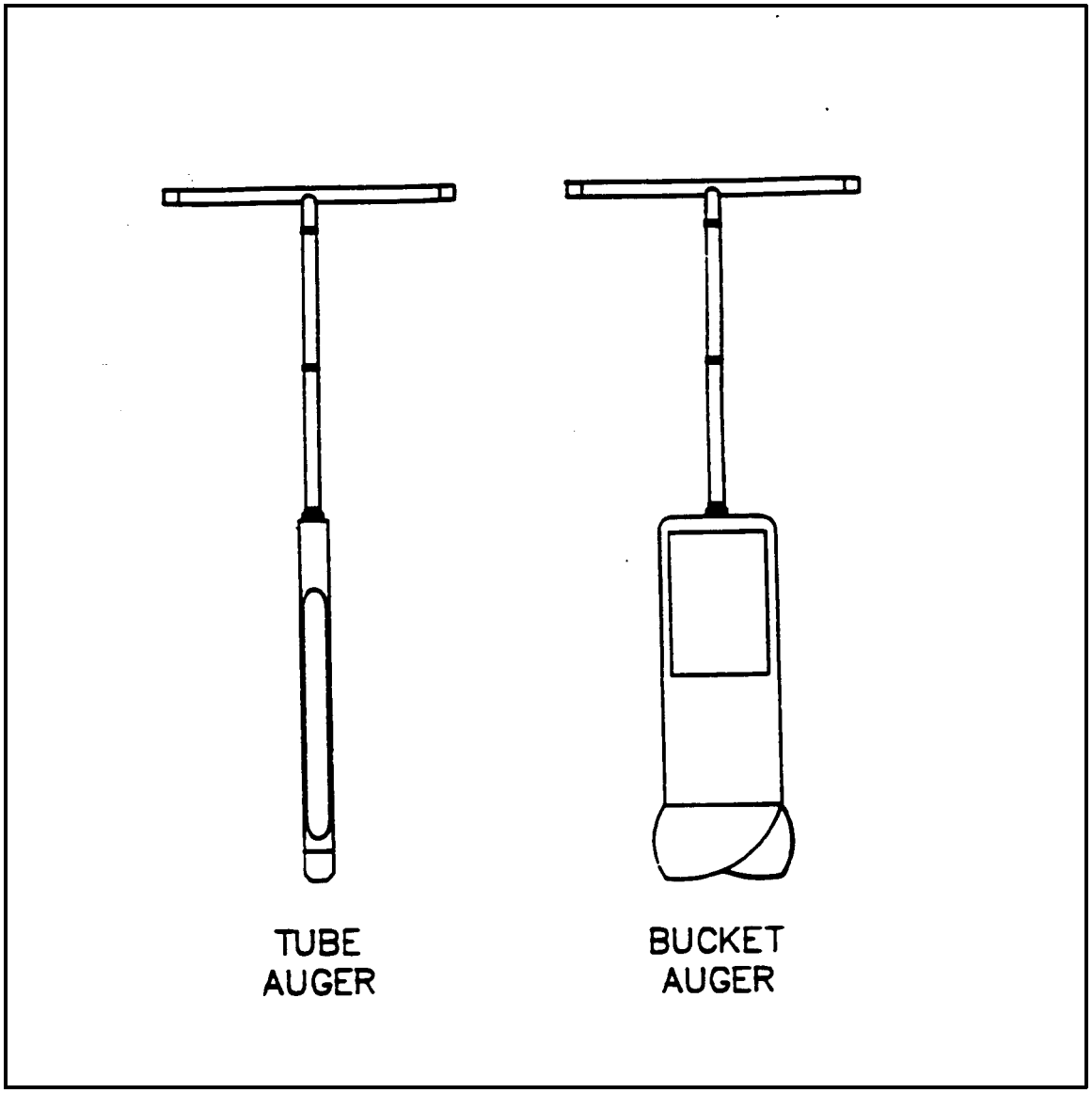

APPENDIX A (Cont'd)

Figures

FIGURE 2. Sampling Trier

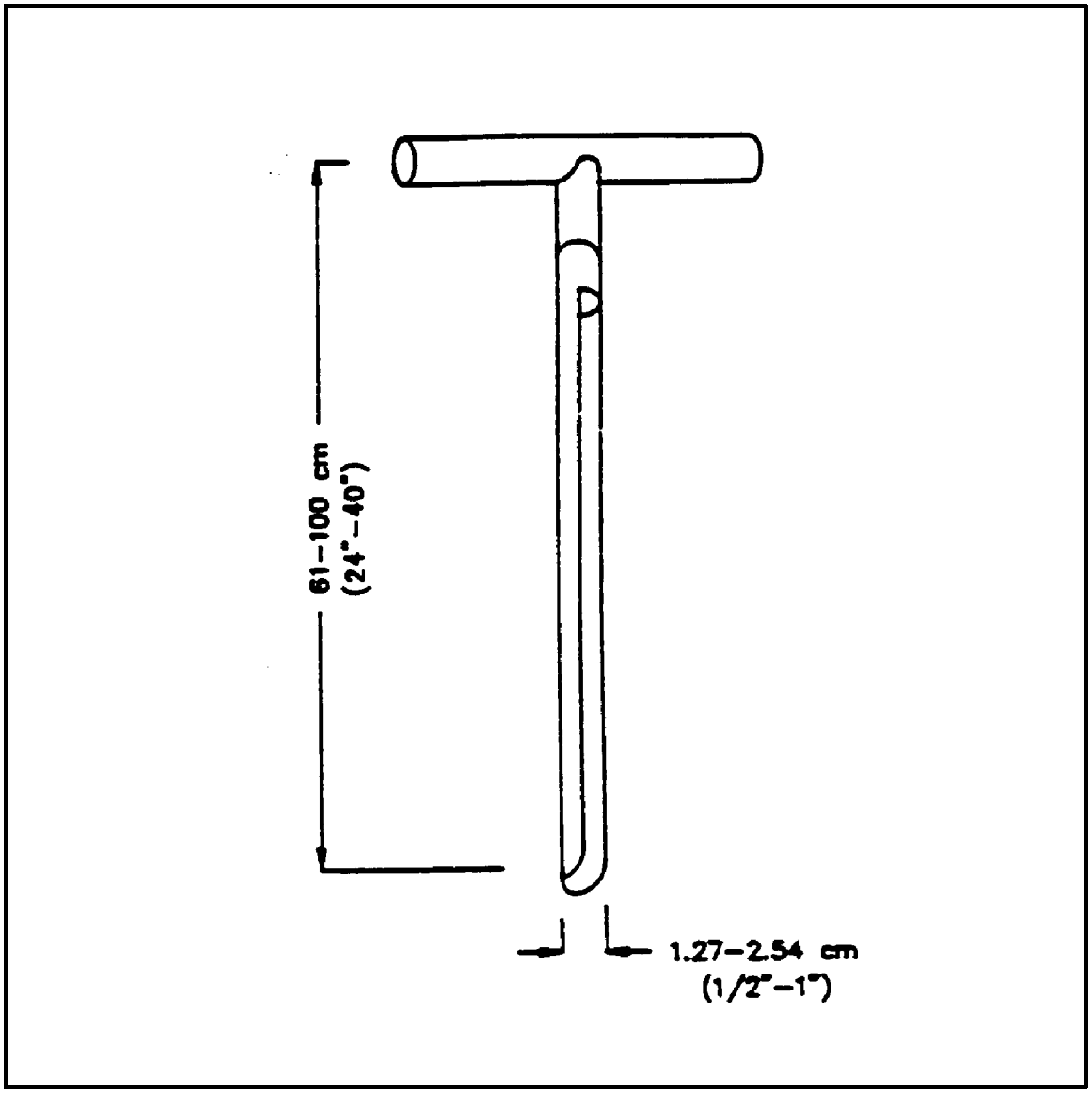

1.0 SCOPE AND APPLICATION

This standard operating procedure (SOP) is applicable to the collection of representative liquid samples, both aqueous and non-aqueous from streams, rivers, lakes, ponds, lagoons, and surface impoundments. It includes samples collected from depth, as well as samples collected from the surface.

These are standard (i.e., typically applicable) operating procedures which may be varied or changed as required, dependent upon site conditions, equipment limitations or limitations imposed by the procedure or other procedure limitations. In all instances, the ultimate procedures employed should be documented and associated with the final report.

Mention of trade names or commercial products does not constitute U.S. Environmental Protection Agency (EPA) endorsement or recommendation for use.

2.0 METHOD SUMMARY

Sampling situations vary widely, therefore, no universal sampling procedure can be recommended. However, sampling of both aqueous and non-aqueous liquids from the above mentioned sources is generally accomplished through the use of one of the following samplers or techniques:

- Kemmerer bottle
- Bacon bomb sampler
- Dip sampler
- Direct method

These sampling techniques will allow for the collection of representative samples from the majority of surface waters and impoundments encountered.

3.0 SAMPLE PRESERVATION, CONTAINERS, HANDLING, AND STORAGE

Once samples have been collected, the following procedure should be followed:

1. Transfer the sample(s) into suitable, labeled sample containers.

2. Preserve the sample if appropriate, or use pre-preserved sample bottles. Do not overfill bottles if they are pre-preserved.

3. Cap the container, place in a ziploc plastic bag and cool to 4°C.

4. Record all pertinent data in the site logbook and on field data sheets.

5. Complete the Chain of Custody record.

6. Attach custody seals to cooler prior to shipment.

7. Decontaminate all sampling equipment prior to the collection of additional samples with that sampling device.

4.0 INTERFERENCES AND POTENTIAL PROBLEMS

There are two primary interferences or potential problems with surface water sampling. These include cross contamination of samples and improper sample collection.

1. Cross contamination problems can be eliminated or minimized through the use of dedicated sampling equipment. If this is not possible or practical, then decontamination of sampling equipment is necessary. Refer to the Sampling Equipment Decontamination SOP.

2. Improper sample collection can involve using contaminated equipment, disturbance of the stream or impoundment substrate, and sampling in an obviously disturbed area.

Following proper decontamination procedures and minimizing disturbance of the sample site will eliminate these problems.

5.0 EQUIPMENT/APPARATUS

Equipment needed for collection of surface water samples may include (depending on technique chosen):

- Kemmerer bottles
- Bacon bomb sampler
- Dip sampler
- Line and messengers
- Sample bottles/preservatives
- Ziploc bags
- Ice
- Coolers
- Chain of Custody records, custody seals
- Field data sheets
- Decontamination equipment
- Maps/plot plan
- Safety equipment
- Compass
- Tape measure
- Survey stakes, flags, or buoys and anchors
- Camera and film
- Logbook/waterproof pen
- Sample bottle labels

6.0 REAGENTS

Reagents will be utilized for preservation of samples and for decontamination of sampling equipment. The preservatives required are specified by the analysis to be performed.

7.0 PROCEDURES

7.1 Preparation

1. Determine the extent of the sampling effort, the sampling methods to be employed, and the types and amounts of equipment and supplies needed.

2. Obtain the necessary sampling and monitoring equipment.

3. Decontaminate or pre-clean equipment, and ensure that it is in working order.

4. Prepare scheduling and coordinate with staff, clients, and regulatory agency, if appropriate.

5. Perform a general site survey prior to site entry, in accordance with the site specific Health and Safety Plan.

6. Use stakes, flagging, or buoys to identify and mark all sampling locations. If required the proposed locations may be adjusted based on site access, property boundaries, and surface obstructions. If collecting sediment samples, this procedure may disturb the bottom.

7.2 Representative Sampling Considerations

In order to collect a representative sample, the hydrology and morphometrics of a stream or impoundment should be determined prior to sampling. This will aid in determining the presence of phases or layers in lagoons, or impoundments, flow patterns in streams, and appropriate sample locations and depths.

Water quality data should be collected in impoundments, and to determine if stratification is present. Measurements of dissolved oxygen, pH, and temperature can indicate if strata exist which would effect analytical results. Measurements should be collected at one-meter intervals from the substrate to the surface using the appropriate instrument (i.e., a Hydrolab or equivalent).

Water quality measurements such as dissolved oxygen, pH, temperature, conductivity, and oxidation-reduction potential can assist in the interpretation of analytical data and the selection of sampling sites and depths when surface water samples are collected.

Generally, the deciding factors in the selection of a sampling device for sampling liquids in streams, rivers, lakes, ponds, lagoons, and surface impoundments are:

1. Will the sample be collected from shore or from a boat?

2. What is the desired depth at which you wish to collect the sample?

3. What is the overall depth and flow direction of river or stream?

4. What type of sample will be collected (i.e., water or lagoon liquids)?

7.2.1 Sampler Composition

The appropriate sampling device must be of a proper composition. Selection of samplers constructed of glass, stainless steel, PVC or PFTE (Teflon) should be based upon the analyses to be performed.

7.3 Sample Collection

7.3.1 Kemmerer Bottle

A Kemmerer bottle (Figure 1, Appendix A) may be used in most situations where site access is from a boat or structure such as a bridge or pier, and where samples at depth are required. Sampling procedures are as follows:

1. Use a properly decontaminated Kemmerer bottle. Set the sampling device so that the sampling end pieces (upper and lower stoppers) are pulled away from the sampling tube (body), allowing the substance to be sampled to pass through this tube.

2. Lower the pre-set sampling device to the predetermined depth. Avoid bottom disturbance.

3. When the Kemmerer bottle is at the required depth, send down the messenger, closing the sampling device.

4. Retrieve the sampler and discharge from the bottom drain the first 10-20 mL to clear any potential contamination of the valve. Transfer the sample to the appropriate sample container.

7.3.2 Bacon Bomb Sampler

A bacon bomb sampler (Figure 2, Appendix A) may be used in situations similar to those outlined for the Kemmerer bottle. Sampling procedures are as follows:

1. Lower the bacon bomb sampler carefully to the desired depth, allowing the line for the trigger to remain slack at all times. When the desired depth is reached, pull the trigger line until taut. This will allow the sampler to fill.

2. Release the trigger line and retrieve the sampler.

3. Transfer the sample to the appropriate sample container by pulling up on the trigger.

7.3.3 Dip Sampler

A dip sampler (Figure 3, Appendix A) is useful in situations where a sample is to be recovered from an outfall pipe or along a lagoon bank where direct access is limited. The long handle on such a device allows access from a discrete location. Sampling procedures are as follows:

1. Assemble the device in accordance with the manufacturer's instructions.

2. Extend the device to the sample location and collect the sample by dipping the sampler into the substance.

3. Retrieve the sampler and transfer the sample to the appropriate sample container.

7.3.4 Direct Method

For streams, rivers, lakes, and other surface waters, the direct method may be utilized to collect water samples from the surface directly into the sample bottle. This method is not to be used for sampling lagoons or other impoundments where contact with contaminants is a concern.

Using adequate protective clothing, access the sampling station by appropriate means. For shallow stream stations, collect the sample under the water surface while pointing the sample container upstream; the container must be upstream of the collector. Avoid disturbing the substrate. For lakes and other impoundments, collect the sample under the water surface avoiding surface debris and the boat wake.

When using the direct method, do not use pre-preserved sample bottles as the collection method may dilute the concentration of preservative necessary for proper sample preservation.

8.0 CALCULATIONS

This section is not applicable to this SOP.

9.0 QUALITY ASSURANCE/ QUALITY CONTROL

There are no specific quality assurance (QA) activities which apply to the implementation of these procedures. However, the following general QA procedures apply:

1. All data must be documented on field data sheets or within site logbooks.

2. All instrumentation must be operated in accordance with operating instructions as supplied by the manufacturer, unless otherwise specified in the work plan. Equipment checkout and calibration activities must occur prior to sampling/operation and they must be documented.

10.0 DATA VALIDATION

This section is not applicable to this SOP.

11.0 HEALTH AND SAFETY

When working with potentially hazardous materials, follow U.S. EPA, OSHA and corporate health and safety procedures.

More specifically, when sampling lagoons or surface impoundments containing known or suspected hazardous substances, adequate precautions must be taken to ensure the safety of sampling personnel. The sampling team member collecting the sample should not get too close to the edge of the impoundment, where bank failure may cause him/her to lose his/her balance. The person performing the sampling should be on a lifeline and be wearing adequate protective equipment. When conducting sampling from a boat in an impoundment or flowing waters, appropriate boating safety procedures should be followed.

12.0 REFERENCES

U.S. Geological Survey. 1977. National Handbook or Recommended Methods for Water Data Acquisition. Office of Water Data Coordination Reston, Virginia. (Chapter Updates available).

U.S. Environmental Protection Agency. 1984. Characterization of Hazardous Waste Sites - A Methods Manual: Volume II. Available Sampling Methods, Second Edition. EPA/600/4-84-076.

APPENDIX A

Figures

FIGURE 1. Kemmerer Bottle

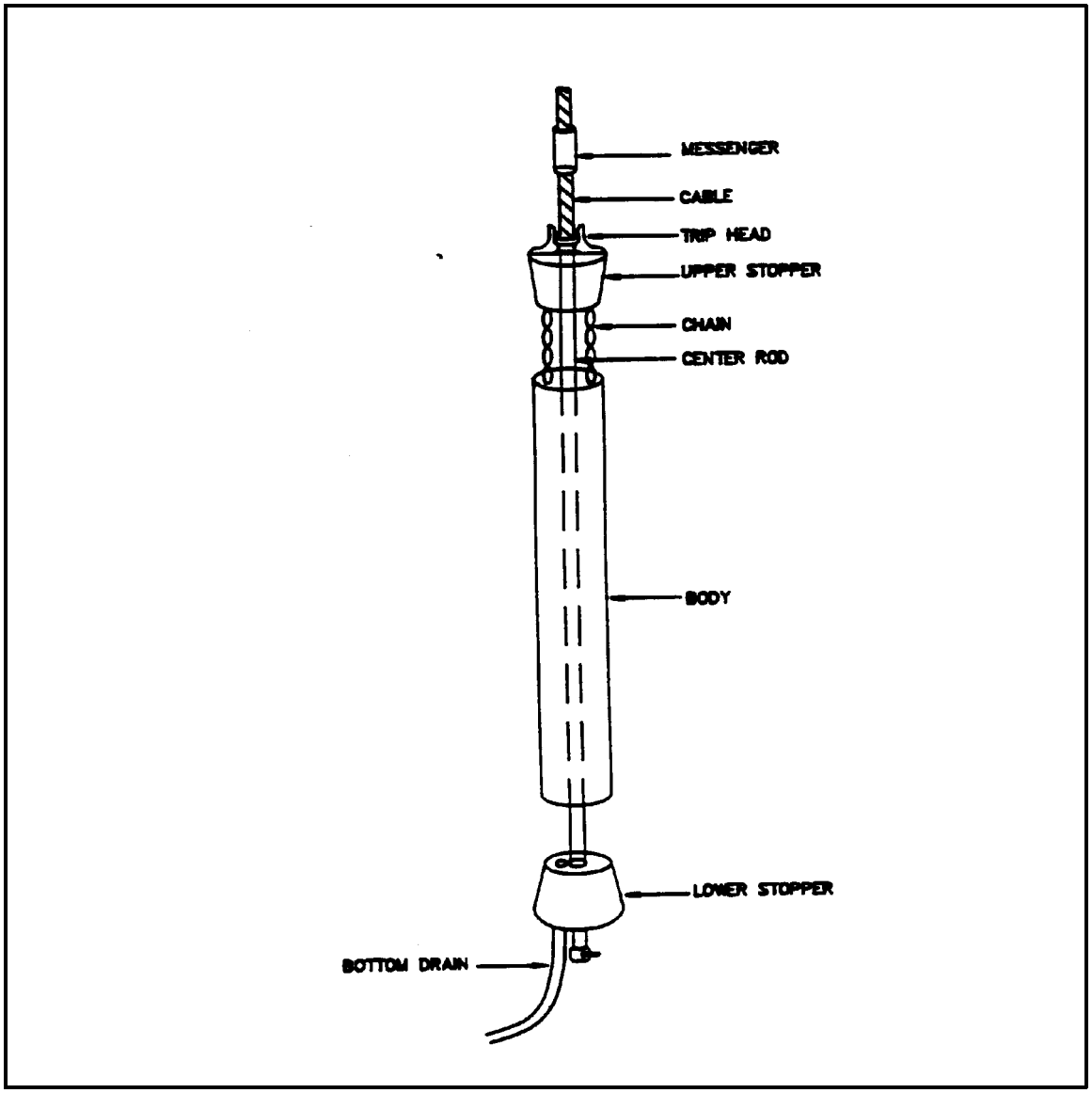

APPENDIX A (Cont'd)

Figures

FIGURE 2. Bacon Bomb Sampler

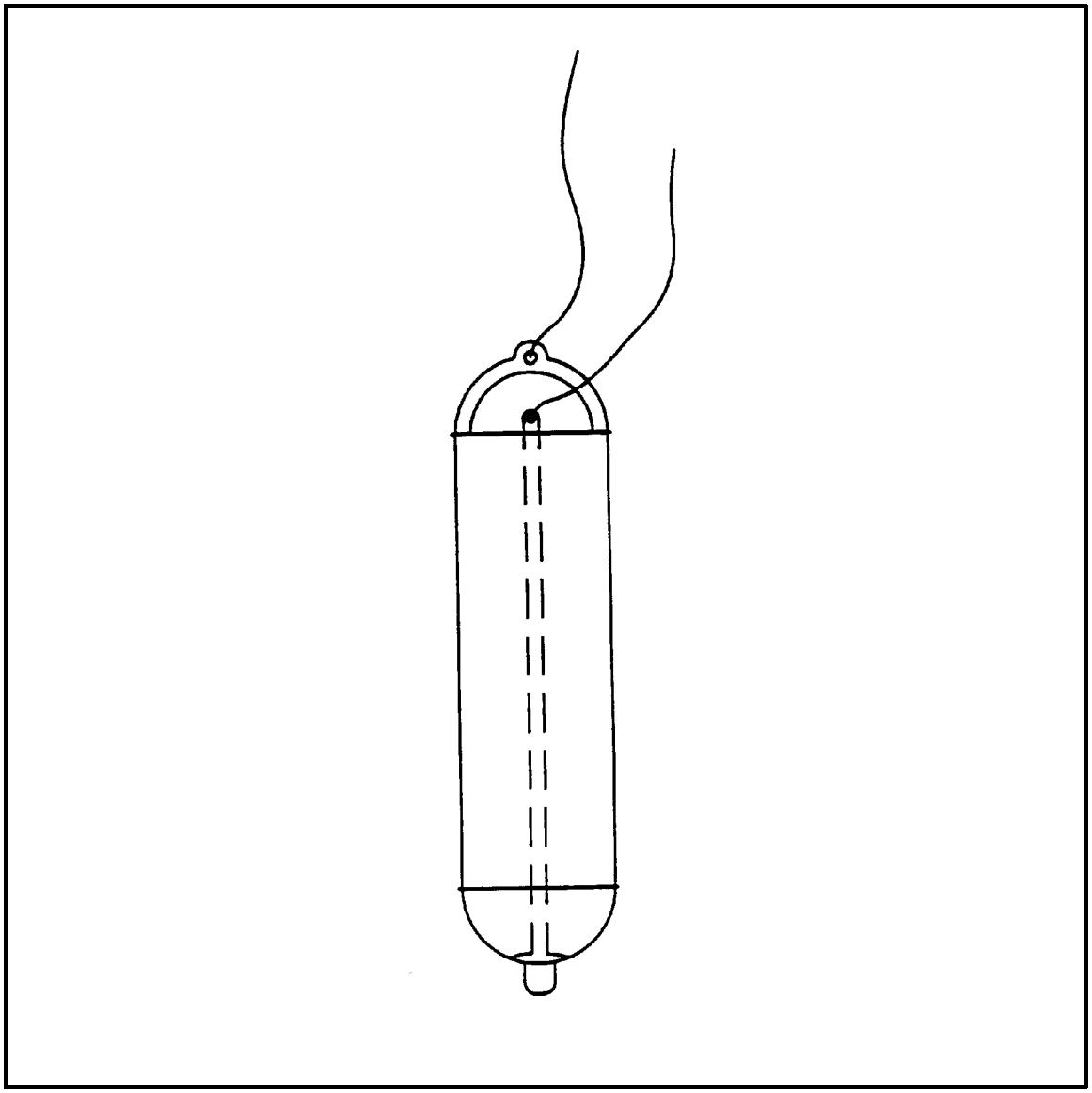

APPENDIX A (Cont'd)

Figures

FIGURE 3. Dip Sampler

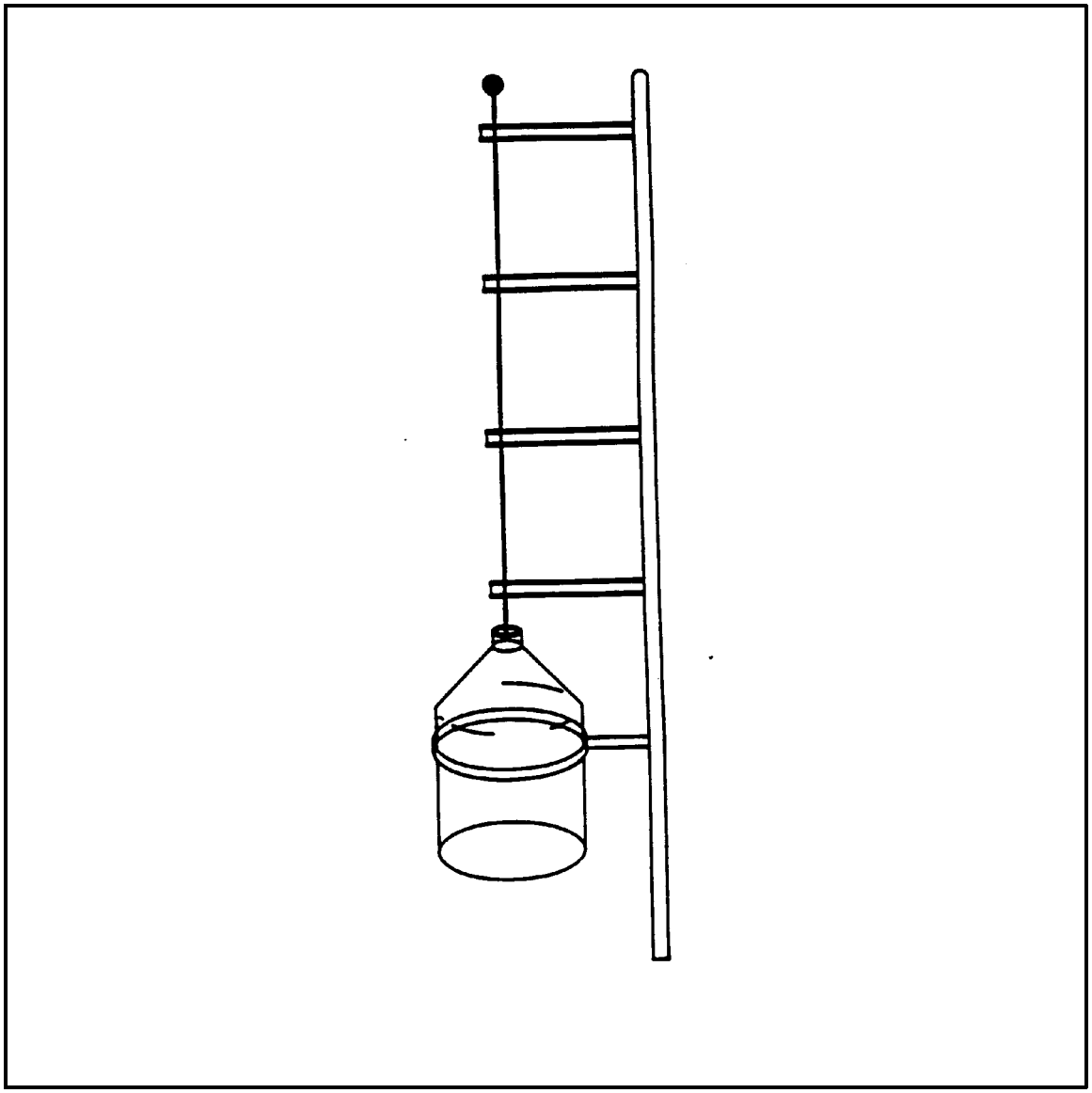

1.0 SCOPE AND APPLICATION

The objective of this standard operating procedure (SOP) is to outline the equipment and methods used in collecting representative samples from waste piles, sludges or other solid or liquid waste mixed with soil.

These are standard (i.e., typically applicable) operating procedures which may be varied or changed as required, dependent on site conditions, equipment limitations or other procedure limitations. In all instances, the ultimate procedures employed should be documented and associated with the final report.

Mention of trade names or commercial products does not constitute U.S. EPA endorsement or recommendation for use.

2.0 METHOD SUMMARY

Stainless steel shovels, trowels, or scoops should be used to clear away surface material before samples are collected. For depth samples, a decontaminated auger may be required to advance the hole, then another decontaminated auger used for sample collection. For a sample core, thin-wall tube samplers or grain samplers may be used. Near surfaces, samples can be collected with a clean stainless steel spoon or trowel.

All samples collected, except those for volatile organic analysis, should be placed into a Teflon lined or stainless steel pail and mixed thoroughly before transfer to appropriate sample container.

3.0 SAMPLE PRESERVATION, CONTAINERS, HANDLING, AND STORAGE

Chemical preservation of solids is generally not recommended. Refrigeration to 4°C is usually the best approach, supplemented by a minimal holding time, depending on contaminants of concern.

Wide mouth glass containers with Teflon lined caps are typically used for waste pile samples. Sample volume required is a function of the analytical requirements and should be specified in the work plan.

4.0 INTERFERENCES AND POTENTIAL PROBLEMS

There are several variables involved in waste sampling, including shape and size of piles, compactness, and structure of the waste material. Shape and size of waste material or waste piles vary greatly in areal extent and height. Since state and federal regulations often require a specified number of samples per volume of waste, the size and shape must be used to calculate volume and to plan for the correct number of samples. Shape must also be accounted for when planning physical access to the sampling point and the equipment necessary to successfully collect the sample at that location.

Material to be sampled may be homogeneous or heterogeneous. Homogeneous material resulting from known situations may not require an extensive sampling protocol. Heterogeneous and unknown wastes require more extensive sampling and analysis to ensure the different components (i.e. layers, strata) are being represented.

The term "representative sample" is commonly used to denote a sample that has the properties and composition of the population from which it was collected and in the same proportions as found in the population. This can be misleading unless one is dealing with a homogenous waste from which one sample can represent the whole population.

The usual options for obtaining the most "representative sample" from waste piles are simple random sampling or stratified random sampling. Simple random sampling is the method of choice unless: (1) there are known distinct strata; (2) one wants to prove or disprove that there are distinct

strata; or (3) one is limited in the number of samples and desires to statistically minimize the size of a "hot spot" that could go unsampled. If any of these conditions exist, stratified random sampling would be the better strategy.

Stratified random sampling can be employed only if all points within the pile can be accessed. In such cases, the pile should be divided into a three-dimensional grid system with, the grid cubes should be numbered, and the grid cubes to be sampled should be chosen by random number tables or generators. The only exceptions to this are situations in which representative samples cannot be collected safely or where the investigative team is trying to determine worst case conditions.

If sampling is limited to certain portions of the pile, a statistically based sample will be representative only of that portion, unless the waste is homogenous.

5.0 EQUIPMENT/APPARATUS

Waste pile solids include powdered, granular, or block materials of various sizes, shapes, structure, and compactness. The type of sampler chosen should be compatible with the waste. Samplers commonly used for waste piles include: stainless steel scoops, shovels, trowels, spoons, and stainless steel hand augers, sampling triers, and grain samplers.

Waste pile sampling equipment check list:

- C Sampling plan
- C Maps/plot plan
- C Safety equipment, as specified in the Health and Safety Plan
- C Compass
- C Tape measure
- C Survey stakes or flags
- C Camera and film
- C Stainless steel, plastic, or other appropriate homogenization bucket or bowl
- C Appropriate size sample jars
- C Ziplock plastic bags
- C Logbook
- C Labels
- C Chain of Custody records and seals
- C Field data sheets
- C Cooler(s)
- C Ice
- C Decontamination supplies/equipment
- C Canvas or plastic sheet
- C Spade or shovel
- C Spatula
- C Scoop
- C Plastic or stainless steel spoons
- C Trowel
- C Continuous flight (screw) augers
- C Bucket auger
- C Post hole auger
- C Extension rods
- C T-Handle
- C Thin-wall tube sampler with cutting tips
- C Sampling trier
- C Grain sampler

6.0 REAGENTS

No chemical reagents are used for the preservation of waste pile samples; however, decontamination solutions may be required. If decontamination of equipment is required, refer to the Sampling Equipment Decontamination SOP, and the site specific work plan.

7.0 PROCEDURES

7.1 Preparation

1. Review all information available on the waste pile and expected or unknown contaminants.

2. Determine the extent of the sampling effort, the sampling methods to be employed, and the types and amounts of equipment and supplies required.

3. Obtain necessary sampling and monitoring equipment.

4. Decontaminate or pre-clean equipment, and ensure that it is in working order.

5. Prepare schedules, and coordinate with staff, client, and regulatory agencies, if appropriate.

6. Perform a general site survey prior to site entry in accordance with the site specific Health and Safety Plan.

7. Use stakes or flagging to identify and mark

all sampling locations. Specific site factors, including extent and nature of contaminant should be considered when selecting sample locations. If required, the proposed locations may be adjusted based on site access, property boundaries, and surface obstructions.

7.2 Sample Collection

7.2.1 Sampling with Shovels and Scoops

Collection of samples from surface portions of the pile can be accomplished with tools such as spades, shovels, and scoops. Surface material can be removed to the required depth with this equipment, then a stainless steel or plastic scoop, or equivalent can be used to collect the sample.

Accurate, representative samples can be collected with this procedure depending on the care and precision demonstrated by sample team members. Use of a flat, pointed mason trowel to cut a block of the desired material can be helpful when undisturbed profiles are required. A stainless steel scoop, lab spoon, plastic spoon, or equivalent will suffice in most other applications. Care should be exercised to avoid the use of devices plated with chrome or other materials. Plating is particularly common with implements such as garden trowels.

The following procedure is used to collect the surface samples:

1. Carefully remove the top layer of material to the desired sample depth with a pre-cleaned spade.

2. Using a pre-cleaned stainless steel scoop, plastic spoon, trowel, or equivalent remove and discard a thin layer of material from the area which came in contact with the spade.

3. If volatile organic analysis is to be performed, transfer the sample into an appropriate, labeled sample container with a stainless steel lab spoon, or equivalent, and secure the cap tightly. Place the remainder of the sample into a stainless steel, plastic, or other appropriate homogenization container, and mix thoroughly to obtain a homogenous sample representative of the entire sampling interval. Then, either place the sample into appropriate, labeled containers and secure the caps tightly; or, if composite samples are to be collected, place a sample from another sampling interval into the homogenization container and mix thoroughly. When compositing is complete, place the sample into appropriate, labeled containers and secure the caps tightly.

7.2.2 Sampling with Bucket Augers and Thin-Wall Tube Samplers

These samplers consist of a series of extensions, a "T" handle, and a bucket auger or thin-wall tube sampler (Appendix A, Figure 1). The auger is used to bore a hole to a desired sampling depth, and is then withdrawn. The sample may be collected directly from the bucket auger. If a core sample is to be collected, the auger tip is then replaced with a thin-wall tube sampler. The sampler is then lowered down the borehole, and driven into the pile to the completion depth. The sampler is withdrawn and the core collected from the thin-wall tube sampler.

Several augers are available. These include: bucket, continuous flight (screw), and post hole augers. Bucket augers are better for direct sample recovery since they provide a large volume of sample in a short time. When continuous flight augers are used, the sample can be collected directly from the flights, which are usually at five (5) foot intervals. The continuous flight augers are satisfactory for use when a composite of the complete waste pile column is desired. Post hole augers have limited utility for sample collection as they are designed to cut through fibrous, rooted, swampy areas.

The following procedure will be used for collecting waste pile samples with the bucket augers and thin-wall tube samplers:

1. Attach the auger bit to a drill rod extension, and attach the "T" handle to the drill rod.

2. Clear the area to be sampled of any surface debris. It may be advisable to remove the first three to six inches of surface material for an area approximately six inches in radius around the drilling location.

3. Begin augering, periodically removing and depositing accumulated materials onto a plastic sheet spread near the hole. This prevents accidental brushing of loose

material back down the borehole when removing the auger or adding drill rod extensions. It also facilitates refilling the hole, and avoids possible contamination of the surrounding area.

4. After reaching the desired depth, slowly and carefully remove the auger from the borehole. When sampling directly from the auger, collect the sample after the auger is removed from the borehole and proceed to Step 10.

5. Remove auger tip from drill rods and replace with a pre-cleaned thin-wall tube sampler. Install proper cutting tip.

6. Carefully lower the tube sampler down the borehole. Gradually force the tube sampler into the pile. Care should be taken to avoid scraping the borehole sides. Avoid hammering the drill rod extensions to facilitate coring as the vibrations may cause the borehole walls to collapse.

7. Remove the tube sampler, and unscrew the drill rod extensions.

8. Remove the cutting tip and the thin-wall tube sampler.

9. Discard the top of the core (approximately one-inch), as this represents material collected before penetration of the layer of concern. Place the remaining core into the appropriate labeled sample container. Sample homogenization is not required.

10. If volatile organic analysis is to be performed, transfer the sample into an appropriate, labeled sample container with a stainless steel lab spoon, or equivalent and secure the cap tightly. Place the remainder of the sample into a stainless steel, plastic, or other appropriate homogenization container, and mix thoroughly to obtain a homogenous sample representative of the entire sampling interval. Then, either place the sample into appropriate, labeled containers and secure the caps tightly; or, if composite samples are to be collected, place a sample from another sampling interval into the homogenization container and mix thoroughly. When compositing is complete, place the sample into appropriate, labeled containers and secure the caps tightly.

11. If another sample is to be collected in the same hole, but at a greater depth, reattach the bucket auger to the drill and assembly, and follow steps 3 through 11, making sure to decontaminate the bucket auger and thin-wall tube sampler between samples.

7.2.3 Sampling with a Trier

This sampling device consists of a trier, and a "T" handle. The trier is driven into the waste pile and used to extract a core sample from the appropriate depth.

The following procedure will be used to collect waste pile samples with a sampling trier:

1. Insert the trier (Appendix A, Figure 2) into the material to be sampled at a 0E to 45E angle from horizontal. This orientation minimizes spillage of the sample. Extraction of the samples might require tilting of the sample containers.

2. Rotate the trier once or twice to cut a core of material.

3. Slowly withdraw the trier, making sure that the slot is facing upward.

4. If volatile organic analysis is to be performed, transfer the sample into an appropriate, labeled sample container with a stainless steel lab spoon, plastic lab spoon, or equivalent and secure the cap tightly. Place the remainder of the sample into a stainless steel, plastic, or other appropriate homogenization container, and mix thoroughly to obtain a homogenous sample representative of the entire sampling interval. Then, either place the sample into appropriate, labeled containers and secure the caps tightly; or, if composite samples are being collected, place samples from the other sampling intervals into the homogenization container and mix thoroughly. When compositing is complete, place the sample

into appropriate, labeled containers and secure the caps tightly.

7.2.4 Sampling with a Grain Sampler

The grain sampler (Appendix A, Figure 3) is used for sampling powdered or granular wastes or materials in bags, fiber drums, sacks, similar containers or piles. This sampler is most useful when the solids are no greater than 0.6 cm (1/4") in diameter.

This sampler consists of two slotted telescoping brass or stainless steel tubes. The outer tube has a conical, pointed tip at one end that permits the sampler to penetrate the material being sampled. The sampler is opened and closed by rotating the inner tube. Grain samplers are generally 61 to 100 cm (24 to 40 in.) long by 1.27 to 2.54 cm (1/2 to 1 in.) in diameter and are commercially available at laboratory supply houses.

The following procedures will be used to collect waste pile samples with a grain sampler:

1. With the sampler in the closed position, insert it into the granular or powdered material or waste being sampled from a point near a top edge or corner, through the center, and to a point diagonally opposite the point of entry.

2. Rotate the sampler inner tube into the open position.

3. Wiggle the sampler a few times to allow material to enter the open slots.

4. Place the sampler in the closed position and withdraw from the material being sampled.

5. Place the sampler in a horizontal position with the slots facing upward.

6. Rotate the outer tube and slide it away from the inner tube.

7. If volatile organic analysis is to be performed, transfer the sample into an appropriate, labeled sample container with a stainless steel lab spoon, plastic lab spoon, or equivalent and secure the cap tightly. Place the remainder of the sample into a stainless steel, plastic, or other appropriate homogenization container, and mix thoroughly to obtain a homogenous sample representative of the entire sampling interval. Then, either place the sample into appropriate, labeled containers and secure the caps tightly; or, if composite samples are to be collected, place a sample from another sampling interval into the homogenization container and mix thoroughly. When compositing is complete, place the sample into appropriate, labeled containers and secure the caps tightly.

8.0 CALCULATIONS

This section is not applicable to this SOP.

9.0 QUALITY ASSURANCE/ QUALITY CONTROL

There are no specific quality assurance activities which apply to the implementation of these procedures. However, the following QA procedures apply:

1. All data must be documented on field data sheets or within site logbooks.

2. All instrumentation must be operated in accordance with operating instructions as supplied by the manufacturer, unless otherwise specified in the work plan. Equipment checkout and calibration activities must occur prior to sampling/operation, and they must be documented.

10.0 DATA VALIDATION

This section is not applicable to this SOP.

11.0 HEALTH AND SAFETY

When working with potentially hazardous materials, follow U.S. EPA/OSHA and corporate health and safety procedures.

12.0 REFERENCES

Test Methods for Evaluating Solids Waste (SW-846), Third Edition, Vol. II Field Manual U.S. EPA Office of Solid Waste and Emergency Response, Washington, D.C. November, 1986.

Engineering Support Branch Standard Operating Procedures and Quality Assurance Manual, U.S. Environmental Protection Agency, Region IV, April 1, 1986.

Field Sampling Procedures Manual, New Jersey Department of Environmental Protection, February, 1988.

APPENDIX A

Figures

FIGURE 1. Sampling Augers

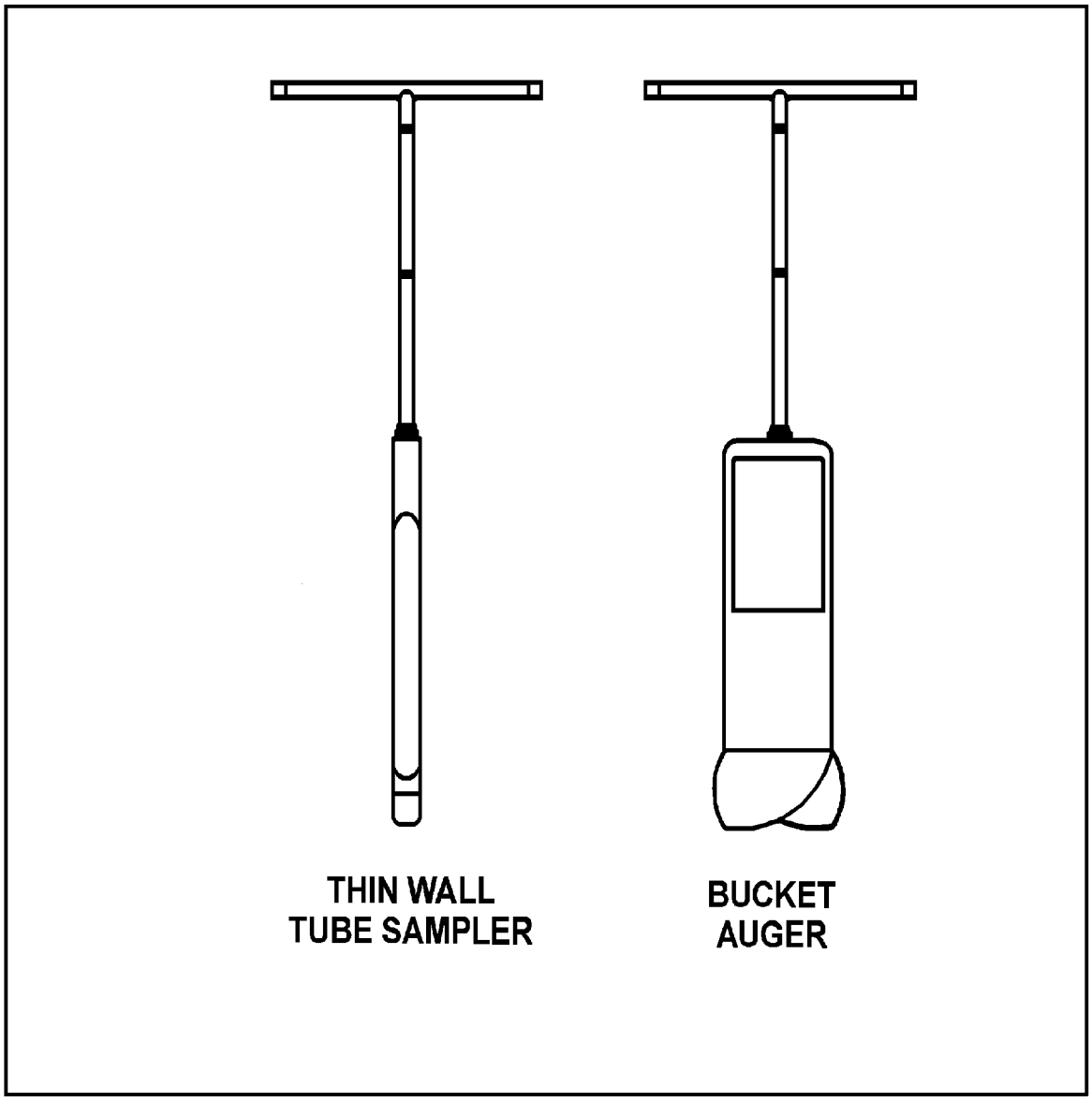

APPENDIX A (Cont'd)

Figures

FIGURE 2. Sampling Trier

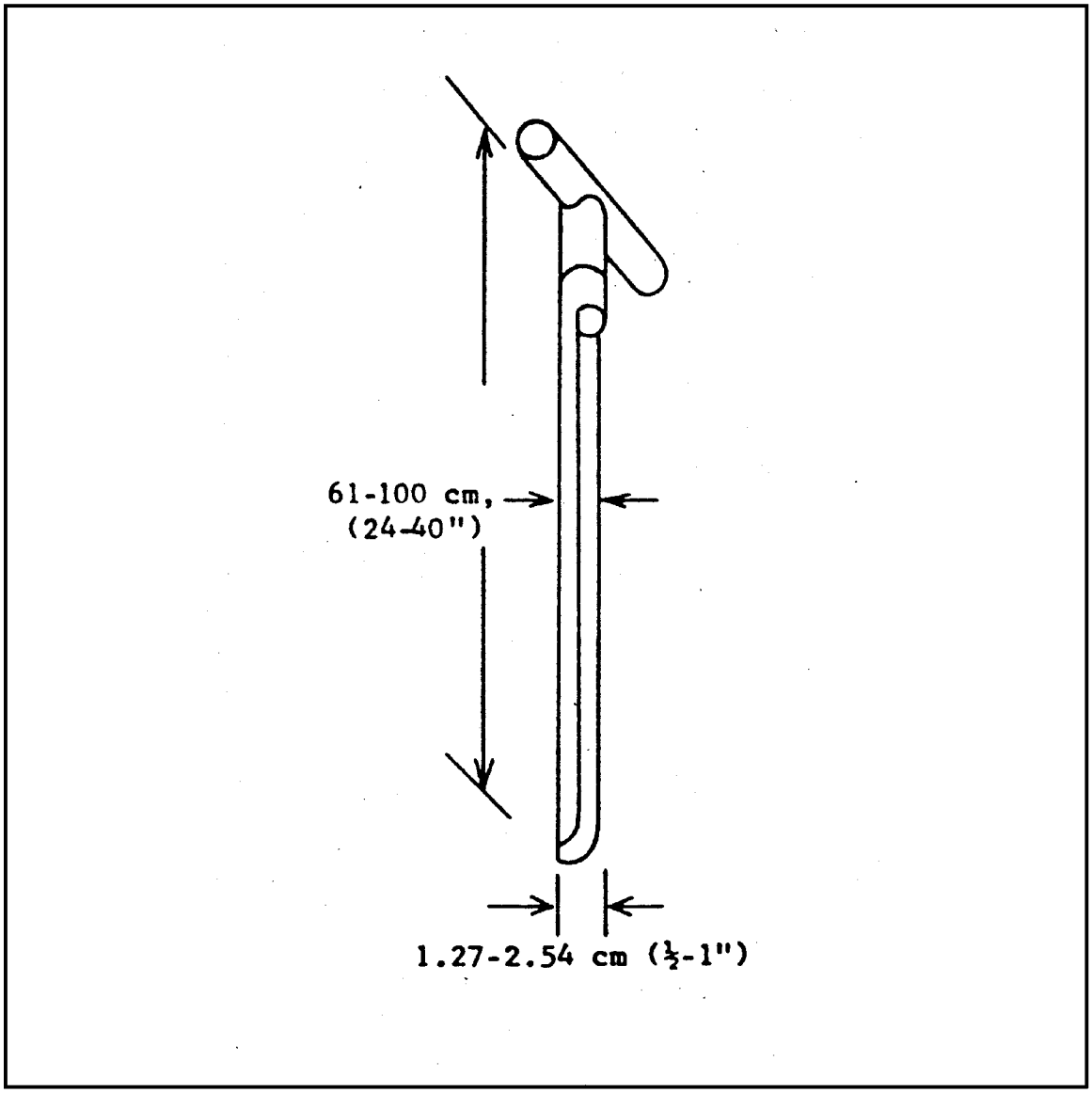

APPENDIX A (Cont'd)

Figures

FIGURE 3. Grain Sampler

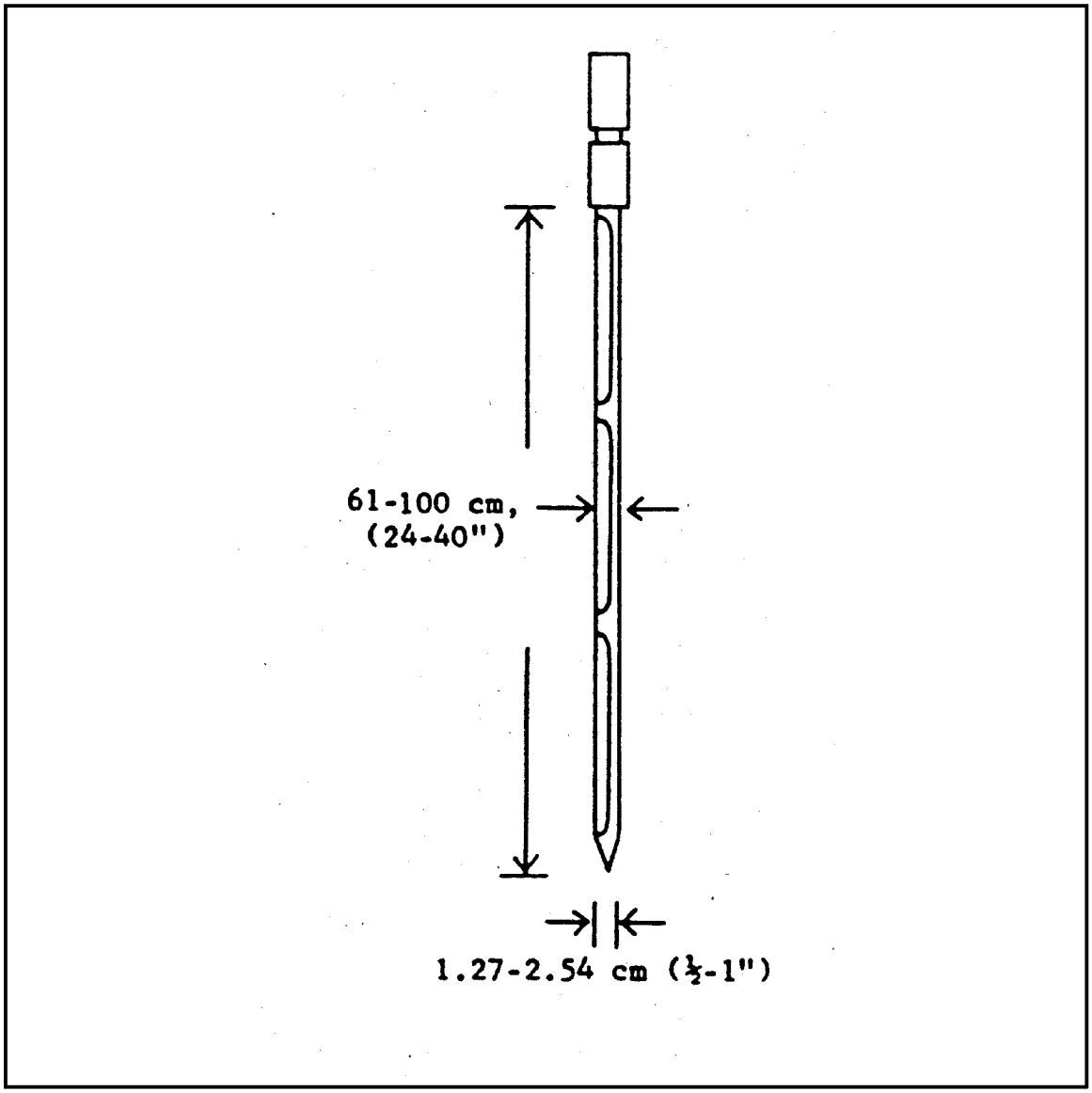

CONTRACTOR'S CHARACTERIZATION AND SAMPLING WORK PLAN

7. CHARACTERIZATION AND SAMPLING PLAN

NWRS will collect waste characterization samples prior to mobilization and commencement of site activities. Conducting this sampling before site work will confirm the delineation of excavation areas between the presumed hazardous soil and the non-hazardous soil. In addition, excavated material will be able to be loaded directly onto trucks for transportation and offsite disposal, thereby minimizing double handling of material and reducing the possibility of cross-contamination.

Waste characterization samples will be collected in order to confirm soil contamination concentrations and to procure disposal facility acceptance. Initially, all in-situ soil samples will be analyzed for Resource Conservation and Recovery Act (RCRA) TCLP Lead. Based on the planned excavation surface area of 4,145 square feet, a twenty foot by twenty foot grid is proposed. The grid will be centered on sample location 12SB21, the highest total lead sample location. A total of thirteen grab soil samples will be collected from the 0-2' depth at the grid line intersections within the planned excavation boundary. An additional grab sample will be collected from the 4-6' depth interval at the 12SB33 location to characterize the deep excavation. The laboratory will retain a volume of soil from each sample location for further analysis (TBD) as necessary for landfill acceptance after the TCLP Lead analysis. The proposed grid and sample locations are presented in Figure 7-1 attached to this plan.

If any of the TCLP Lead samples exceed 5 mg/l indicating hazardous concentrations, the surrounding four grid areas would be considered hazardous. The assumed extent of the hazardous soils would be to the planned excavation limit from the IMWP or next non-hazardous TCLP lead sample (whichever comes first). After the hazardous and non-hazardous areas are defined, one sample from each of the two defined waste streams (hazardous and non-hazardous) will be selected for further analysis to gain landfill acceptance.

Following excavation, Tt will conduct verification sampling according to the IMWP to confirm the adequate removal of all contaminated soil from the SWMU 12 Battery Dump Site. Upon receipt of acceptable verification sample results, NWRS will commence backfilling and restoration of the excavated area.

CONTRACTOR'S LABORATORY SOPS

STAT Analysis Corporation:

STANDARD OPERATING PROCEDURE 2125

LEACHING PROCEDURES

TOXICITY CHARACTERISTIC LEACHING PROCEDURE (EPA METHOD 1311)

SYNTHETIC PRECIPITATION LEACHING PROCEDURE (EPA METHOD 1312)

ASTM D3987-85 LEACHING PROCEDURE

Revision 00
Effective Date: June 2, 2003

Authors: Ian H. Graske and Bruce Anderson

Printed Name	**Signature/Date**
Bruce Anderson Inorganic Manager	_____
Ian H. Graske QA Manager	_____
Dennis Jachim Technical Manager	_____
Thomas M. Bauer Laboratory Director	_____

This Standard Operating Procedure has been prepared for the sole use of STAT Analysis Corporation.

Copy Number: _____

The absence of a Copy Number indicates this is an uncontrolled copy of the document supplied for information only.

Table of Contents

Title Page 1
Table of Contents 2
1. Identification of Test Method 3
2. Applicable Matrix or Matrices 3
3. Detection Limits 3
4. Scope and Application 3
5. Summary of Test Method 3
6. Definitions 4
7. Interferences 4
8. Safety 5
9. Equipment and Supplies 5
10. Reagents and Standards 8
11. Sample Collection, Preservation, Shipment and Storage 9
12. Quality Control 10
13. Calibration and Standardization 11
14. Procedure 11
15. Data Reduction, Calculations and Loading 21
16. Method Performance 21
17. Pollution Prevention 22
18. Data Assessment and Criteria For Quality Control Measures 22
19. Corrective Actions for Out-Of-Control Data 22
20. Contingencies for Handling Out-Of-Control Or Unacceptable Data 22
21. Waste Management 23
22. References 23
23. Forms, Figures, Tables, Diagrams, Flowcharts, Attachments or Validation Data 23

Figure 1 and Figure 2: Agitation Apparatus and Zero Headspace Extractor (ZHE) 25

Flowchart 1: Leaching Procedure Flowchart from Method 1311, Revision 0; U.S. EPA SW-846 "Test Methods for Evaluating Solid Waste, Physical/Chemical Methods" Update III, December 1996 26

Flowchart 2: Leaching Procedure Flowchart from Method 1312, Revision 0; U.S. EPA SW-846 "Test Methods for Evaluating Solid Waste, Physical/Chemical Methods" Update III, December 1996 28

1.0 Identification of Test Method

SOP Title: Leaching Procedures is abbreviated LP in this SOP. This SOP incorporates three leaching procedures.
SOP Title: Toxicity Characteristic Leaching Procedure (EPA 1311) is abbreviated as TCLP in laboratory records.
SOP Title: Synthetic Precipitation Leaching Procedure (EPA 1312) is abbreviated as SPLP in laboratory records.
SOP Title: ASTM Leaching Procedure (ASTM D3987-85) is abbreviated as ASTM in this SOP.
All references which apply to all three leaching procedures listed is abbreviated LP in this SOP. If a section refers to a specific leaching procedure, it will be abbreviated accordingly.

2.0 Applicable Matrix or Matrices

This method is applicable to the following matrices: liquid, solid and multiphasic wastes.

3.0 Detection Limits

See specific analytical SOPs for MDLs and Reporting limits for specific matrices.

4.0 Scope and Application

4.1 The LP method is designed to determine the mobility of organic and inorganic analytes present in liquid, solid and multiphasic wastes.

4.2 If a total analysis of the waste demonstrates that individual analytes are not present in the waste, or that they are present, but at such low concentrations that the appropriate regulatory levels could not possibly be exceeded, the LP need not be run.

4.3 If an analysis of any one of the liquid fractions of the LP extract indicates that a regulated compound is present at such a high concentration that, even after accounting for dilution from other fractions of the extract, the concentration would be equal to or above the regulatory level for that compound, then the waste is hazardous and it is not necessary to analyze the remaining fractions of the extract.

4.4 If an analysis of extract obtained using a bottle extractor shows that the concentration of any regulated volatile analyte equals or exceeds the regulatory level for that compound, then the waste is hazardous and extraction using the Zero Headspace Extractor (ZHE) is not necessary. However, extract from a bottle extractor cannot be used to determine that the concentration of volatile compounds is below the regulatory limit.

5.0 Summary of Test Method

5.1 For liquid wastes (i.e., those containing less than 0.5% dry solid material), the waste, after filtration through a 0.6 to 0.8 μm glass fiber filter, is defined as the LP extract.

5.2 For wastes containing greater than or equal to 0.5% solids, the liquid, if any is separated from the solid phase and stored for later analysis. The particle size of the solid phase is reduced, if necessary. The solid phase is extracted with an amount of extraction fluid equal to 20 times the weight of the solid phase. The extraction fluid employed:

- is reagent water for ASTM samples.
- is a function of the alkalinity of the solid phase of the waste for TCLP samples.
- is a function of the region of the country where the sample site is located if the SPLP sample is a soil.

If the SPLP sample is a waste or wastewater, the extraction fluid employed is a pH 4.2 solution.

A special extractor vessel is used when testing for volatile analytes. Following extraction, the liquid is separated from the solid phase by filtration through a 0.6 to 0.8 μm glass fiber filter.

5.3 If compatible (i.e., multiple phases will not form on combination), the initial liquid phase of the waste is added to the liquid extract, and these are analyzed together. If incompatible, the liquids are analyzed separately and the results are mathematically combined to yield a volume-weighted average concentration.

5.4 Method Modifications from Reference – This SOP incorporates options for three methods; based on SW-846 (1311 and 1312) and ASTM method D3987-85.

5.4.1 Sample amounts used are varied based upon analytical tests required.

5.4.2 Sample extracts for volatile organic analysis are expressed directly into 40 mL VOA vials according to criteria in Section 9.6.2.

5.4.3 Samples for ASTM are rotated at 30 ± 2 rpm and filtered through a 0.6 to 0.8 μm glass fiber filter.

5.4.4 Preliminary evaluations are not done using a minimum 100 g aliquot.

6.0 Definitions

The STAT Analysis Quality Assurance Manual Section 19.0 contains all the definitions of standard terms used in SOPs.

7.0 Interferences

Potential interferences that may be encountered during analysis are discussed in the individual analytical methods.

8.0 Safety

8.1 Safety glasses, gloves, lab coats and closed toe shoes, are to be used during this procedure.

8.2 Tumbling apparatus' must be covered or located away from direct contact with lab personnel.

8.3 Venting and pressurizing should be conducted in a hood or shielded area if possible.

8.4 Other safety precautions must be conducted in accordance with the Chemical Hygiene Plan. Other actions can also be applied if deemed necessary. A reference file of material safety data sheets (MSDS) is available in each room for personnel involved in an analysis using chemicals.

9.0 Equipment and Supplies

The following apparatus is recommended for performing this procedure. Equivalent items can be used, if with their use, the analytical and QA/QC requirements in this SOP can be met. All catalog numbers in this SOP are current as of the effective date and thereafter subject to change.

9.1 Agitation Apparatus: Millipore four space Rotary Agitator and Environmental Express 12 space Rotary Agitator.

The agitation apparatus must be capable of rotating the extraction vessel in and end-over-end fashion at 30 ± 2 rpm.

9.2 Extraction Vessels

9.2.1 Zero-Headspace Extraction Vessel (ZHE): MilliporeYT30090HW Zero Headspace Extractor.

This device is for use only when the waste is being tested for the mobility of volatile analytes. The ZHE allows for liquid/solid separation within the device, and effectively precludes headspace. This type of vessel allows for initial liquid/solid separation, extraction, and final extract filtration without opening the vessel. The vessels shall have an internal volume of 500-600 mL, and be equipped to accommodate a 90-110 mm filter. The devices contain VITON® O-rings, which should be replaced frequently.

For the ZHE to be acceptable for use, the piston within the ZHE should be able to be moved with approximately 15 psi or less. If it takes more pressure to move the piston, the O-rings in the device should be replaced. If this does not solve the problem, the ZHE is unacceptable for LP analyses and the manufacturer should be contacted.

The ZHE should be checked for leaks before every extraction. Pressurize the device to 50 psi, allow it to stand unattended for 1 hour, and recheck the pressure. If pressure is lost, check all fittings and inspect and replace O-rings, if necessary. Retest the device. If leakage problems cannot be solved, the manufacturer should be contacted.

9.2.2 Bottle Extraction Vessel: ESS 32 oz Amber Wide Mouth Glass Jars (UC0950-0050 or UC0950-0010), for Metals, ESS 250 ml and 500 ml plastic bottles and Silgan 500 or 950 ml HDPE Jars.

When the waste is being evaluated using the non-volatile extraction, a jar with sufficient capacity to hold the sample and the extraction fluid is needed. Headspace is allowed in this vessel.

The extraction bottles may be constructed from various materials, depending on the analytes to be analyzed and the nature of the waste (see Section 9.3.3). It is recommended that borosilicate glass bottles be used instead of other types of glass, especially when inorganics are of concern. Plastic bottles, other than polytetrafluorethylene, shall not be used if organics are to be investigated. When this type of extraction vessel is used, the filtration device discussed in Section 9.3.2 is used for initial liquid/solid separation and final extract filtration.

9.3 Filtration Devices: It is recommended that all filtrations be performed in a hood.

9.3.1 Zero-Headspace Extractor Vessel (ZHE): When the waste is evaluated for volatiles, the ZHE described in Section 9.2.1 is used for filtration. The device shall be capable of supporting and keeping in place the glass fiber filter and be able to withstand the pressure needed to accomplish separation (50 psi).

NOTE: When it is suspected that the glass fiber filter has been ruptured, an in-line glass fiber filter may be used to filter the material within the ZHE.

9.3.2 Filtration Devices: Millipore YT30142HW Hazardous Waste Filtration System.

Filter Holder: When the waste is evaluated for other than volatile analytes, any filter holder capable of supporting a glass fiber filter and able to withstand the pressure needed to accomplish separation may be used. Suitable filter holders range from simple vacuum units to relatively complex systems capable of exerting pressures of up to 50 psi or more. The type of filter holder used depends on the properties of the material to be filtered (see Section 9.3.3). These devices shall have a minimum internal volume of 300 mL and be equipped to accommodate a minimum filter size of 47 mm (filter holders having an internal capacity of 1.5 L or greater, and equipped to accommodate a 142 mm diameter filter, are recommended). Vacuum filtration can only be used for wastes with low solids content (<10%) and for highly granular, liquid-containing wastes. All other types of wastes should be filtered using positive pressure filtration.

9.3.3 Materials of Construction: Extraction vessels and filtration devices shall be made of inert materials, which will not leach or absorb waste components. Glass, polytetrafluorethylene (PTFE), or type 316 stainless steel equipment may be used when evaluating the mobility of both organic and inorganic components. Devices made of high-density polyethylene (HDPE), polypropylene (PP), or polyvinyl chloride (PVC) may be used only when evaluating the mobility of metals. Borosilicate glass bottles are recommended for use over other types of glass bottles, especially when organics are analytes of concern.

9.4 Filters: Gelman Sciences TCLP/SPLP Glass Fiber Filter 90 and 142 mm

Filters shall be made of borosilicate glass fiber, shall contain no binder materials, and shall have an effective pore size of 0.6 to 0.8 μm, or equivalent. Pre-filters must not be used. When evaluating the

mobility of metals, filters shall be acid washed prior to used by rinsing with 1.1 nitric acid followed by three consecutive rinses with de-ionized water (a minimum of 1 L per rinse is recommended). Glass fiber filters are fragile and should be handled with care.

9.5 pH Meter: Beckman 340 pH Meter, Orion/VWR or equivalent 4, 7 and 10 Buffer solution.

The meter should be accurate to ± 0.05 units at 25°C.

9.6 ZHE Extract Collection Container (ECC):

- 40 mL pre-cleaned HCl preserved glass VOA vials.
- TEDLAR® bags.

The ECCs listed are recommended for use under the following conditions:

9.6.1 If the waste contains a significant amount of liquid in the initial phase and has ≥ 0.5% dry solids a TEDLAR® bag is used for both the initial solid/liquid separation and the final extract filtration.

9.6.2 If the waste is:
1) 100% solid (no initial liquid phase) or
2) Has <0.5% dry solids and the liquid is greater than 99% aqueous
40 mL HCl preserved VOA vials may be used.

9.7 ZHE Extraction Fluid Transfer Devices: Any device capable of transferring the extraction fluid into the ZHE without changing the nature of the extraction fluid is acceptable [e.g., a positive displacement or peristaltic pump, pressure filtration unit (see Section 9.3.2), glass, stainless steel or PTFE gas tight syringe, or other ZHE device].

9.8 Laboratory Balance: Mettler BD1201, Mettler PM300
Any laboratory balance accurate to within ± 0.01 grams may be used (all weight measurements are to be within ± 0.1 grams).

9.9 Beakers: plastic or glass 150, 400 and 500 mL

9.10 Parafilm, appropriate diameter to cover beaker.

9.11 Magnetic Stirrer: VWR Model 200 Magnetic Stirrer

9.12 Hot Plate: VWR Dylatherm

9.13 Wooden spatulas

9.14 Syringes: 100 or 250 mL glass, stainless steel, or PTFE gas tight.

9.15 Standard Seive 9.5 mm.

10.0 Reagents and Standards

The following reagents and standards are required to perform this procedure. When instructions are given on how to prepare a specific volume of a reagent or standard, larger or smaller volumes can be prepared as needed so long as the final concentrations remain the same. Any other deviations from the reagents or standards listed in this SOP could be detrimental to the quality of the data produced. Such deviations would have to be approved and documented (see 230 Corrective Action SOP).

10.1 Instructions for labeling and record keeping of reagents and standards are contained in SOP 1010 Standard and Reagent Preparation.

10.2 Reagents - In methods where the purity of reagents is not specified, analytical reagent grade shall be used. Reagents of lesser purity than those specified by the test method shall not be used.

10.2.1 Reagent Water: Reagent water is defined as water in which an interferant is not observed at or above the method detection limit.

10.2.2 Hydrochloric Acid (1N), HCl, made from ACS reagent grade. Dilute 83.3 ml of concentrated HCl to 1 L with de-ionized reagent water.

10.2.3 Nitric acid, HNO_3, concentrated, ACS reagent grade.

10.2.4 1:1 Nitric Acid, HNO_3. Dilute 500 ml of HNO_3 to 1L with reagent water.

10.2.5 Sodium Hydroxide, NaOH, ACS reagent grade pellets.

10.2.6 Glacial Acetic Acid, CH3CH2OOH, ACS reagent grade.

10.2.7 Sulfuric Acid, concentrated ACS reagent grade.

10.2.8 Extraction Fluid:

10.2.8.1 Extraction fluid #1: Add 5.7 mL Glacial Acetic Acid to 500 mL of reagent water, dissolve 2.57 g of NaOH, and dilute to a volume of 1 liter. When correctly prepared, the pH of this fluid will be 4.93 ± 0.05. (TCLP)

10.2.8.2 Extraction Fluid #2: Dilute 5.7 mL Glacial Acetic Acid with reagent water to a volume of 1 liter. When correctly prepared, the pH of this fluid will be 2.88 ± 0.05. (TCLP)

10.2.8.3 Extraction Fluid #3: This fluid is reagent water and is used to determine cyanide, and for ASTM and SPLP volatiles extractions.

10.2.8.4 Extraction Fluid #4: Sulfuric Acid/Nitric Acid (60/40 weight percent mixture) H_2SO_4/HNO_3. Cautiously mix 60 mL of concentrated sulfuric acid with 40 mL of concentrated nitric acid. If preferred, a more dilute H_2SO_4/HNO_3 acid mixture may be prepared and used in steps 10.2.3.1 and 10.2.3.2 making it easier to adjust the pH of the extraction fluids. This fluid is used to determine the leachability of samples from sites east of the Mississippi River. (SPLP method)

10.2.8.5 Extraction Fluid #5: Made by adding the 60/40 weight percent mixture of sulfuric acids (or a suitable dilution) to reagent water until the pH is 5.00 ± 0.05. The fluid is used to determine the leachability of soil from sites west of the Mississippi River. (SPLP method)

NOTE: These extraction fluids should be monitored frequently for impurities. The pH must be checked prior to use to ensure that these fluids are made up accurately. If impurities are found or the pH is not within the above specifications, the fluid shall be discarded and fresh extraction fluid prepared. The pH of the extraction fluid must be checked before rotation. Record this in the TCLP Prep logbook.

11.0 Sample Collection, Preservation and Handling

All samples are stored away from all standards, reagents, food and other potentially contaminating sources in order to prevent cross contamination.

SAMPLE MAXIMUM HOLDING TIMES (days)

If sample holding times are exceeded, the values obtained will be considered minimal concentrations.

Matrix	Bottle Type	From: Field Collection To: SPLP Extraction	From: SPLP Extraction To: Preparative Extraction	From: Preparative Extraction To: Determinative Analysis	Total Elapsed Time
Volatiles	G, AG	14	NA	14	28
Semi-Volatiles	G, AG	14	7	40	61
Mercury	G, AG, P	28	NA	28	56
Metals, except Mercury	G, AG, P	180	NA	180	360

[P= Polyethylene, G = Glass, AG = Amber Glass, etc.].

All samples and extracts are stored at 0.1-6 degrees C.
Metals extracts will be preserved to pH < 2 with 1:1 HNO_3.
Volatiles extracts will be preserved with HCl.

11.1 All samples shall be collected using an appropriate sampling plan.

11.2 The LP may place requirements on the minimal size of the field sample, depending upon the physical state or states of the waste and the analytes of concern. An aliquot is needed for preliminary evaluation of which extraction fluid is to be used for the non-volatile analyte extraction procedure (TCLP/SPLP). Another aliquot may be needed to actually conduct the non-volatile extraction. If volatile organics are of concern, another aliquot may be needed. Quality control measures may require additional aliquots. Further, it is always wise to collect more sample just in case something goes wrong with the initial attempt to conduct the test.

11.3 Preservatives shall not be added to samples before extraction.

11.4 Samples are refrigerated unless refrigeration results in irreversible physical damage to the waste. If precipitation occurs, the entire sample (including precipitate) is extracted.

11.5 When the waste is to be evaluated for volatile analysis, care shall be taken to minimize the loss of volatiles. Samples shall be collected and stored in a manner intended to prevent the loss of volatile organics (e.g., samples are collected in Teflon-lined septum capped vials and stored at 0.1-6°C. Samples should be opened only immediately prior to extraction).

11.6 LP extracts are prepared for analysis and analyzed as soon as possible following extraction. Extracts or portions of extracts for metallic analyte determinations must be acidified with Nitric Acid to a pH < 2, unless precipitation occurs (see Section 14.2.14 if precipitation occurs). Extracts are preserved for other analytes according to the guidance given in the individual analysis methods. Extracts or portions of extracts for organic analyte determinations shall not be allowed to come into contact with the atmosphere (i.e., no headspace) to prevent losses. See Section 12.0 (Quality Control) for acceptable sample and extract holding times.

12.0 Quality Control

The following details the QC requirements that apply to this analysis. Each Quality Control Indicator (QCI) provides information pertaining to either method or individual sample performance. Our goal is to produce defensible data of known and documented quality. The results of these Quality Control Indicator (QCI) samples are used to assess the acceptability of data.

12.1 Blanks

12.1.1 A method blank shall be prepared once per preparation batch of 20 or less samples per matrix type. If more than 20 samples are prepared a second blank shall be prepared after the twentieth sample.

12.1.2 The method blank shall be processed through all preparatory steps used for the samples. The blank shall be analyzed using the same instrument and conditions as the samples. The Method Blank analysis is performed to determine if any contamination is present in the analytical process and is used to evaluate acceptance of the batch of samples. For ZHE extraction, alternate which ZHE unit is used for the blank, rotating all units through the process over time.

12.2 Matrix Spike and Matrix Spike Duplicate (MS/MSD)

One matrix spike shall be performed for each batch of twenty samples or less if preparing TCLP or SPLP extractions. TCLP and SPLP samples are separate extractions and must each have a unique matrix spike.

MS/MSDs are prepared according to individual analytical SOPS and are not part of this method.

For metals analysis, if percent recovery is less than 50% and the metal concentration is within 20% of the regulatory level, the method of standard additions may be used to determine metal concentrations.

13.0 Calibration and Standardization

13.1 Balances – Be sure the balance is checked prior to use and performance criteria are met (see SOP 1040 for calibration of balances.

13.2 pH Meter – Calibrate the pH meter prior to use (see SOP 4210 for pH meter calibration).

13.3 Thermometer – Check the thermometer to ensure the calibration has not expired (see SOP 1040 for thermometer calibration). Check the thermometer during the analysis and record the corrected temperature in the preparation logbook.

14.0 Procedure

14.1 Preliminary Evaluations:

Perform preliminary LP evaluations on an aliquot of waste. Size used may vary depending on amount of sample available for testing. This aliquot may not actually undergo LP extraction. These preliminary evaluations include: (1) determination of the percent solids (Section 14.1.1); (2) determination of whether the waste contains insignificant solids and is, therefore, its own extract after filtration (Section 14.1.2); (3) determination of whether the solid portion of the waste requires particle size reduction (Section 14.1.3); and (4) determination of which of the extraction fluids are to be used for the non-volatile LP extraction of the waste (Section 14.1.4 and 14.1.5).

14.1.1 Preliminary determination of percent solids: Percent solids is defined as that fraction of a waste sample (as a percentage of the total sample) from which no liquid may be forced out by an applied pressure, as described below.

14.1.1.1 If the waste will obviously yield no liquid when subjected to pressure filtration (i.e., is 100% solids) proceed to Section 14.1.3.

14.1.1.2 If the sample is liquid or multiphasic, liquid/solid separation to make a preliminary determination of percent solids is required. This involves the filtration device described in Section 9.3.2 and is outlined in Sections 14.1.1.3 through 14.1.1.9.

14.1.1.3 Pre-weigh the filter and the container that will receive the filtrate, record the weight.

14.1.1.4 Assemble the filter holder and filter following the manufacturer's instructions.

14.1.1.5 Weigh out a subsample of the waste and record the weight.

14.1.1.6 Allow slurries to stand to permit the solid phase to settle. Wastes that settle slowly may be centrifuged prior to filtration. Centrifugation is to be used only as an aid to filtration. If used, the liquid should be decanted and filtered followed by filtration of the solid portion of the waste through the same filtration system.

14.1.1.7 Quantitatively transfer the waste sample to the filter holder (liquid and solid phases). Spread the waste sample evenly over the surface of the filter.

NOTE: If waste material (>1% of original sample weight) has obviously adhered to the container used to transfer the sample to the filtration apparatus, determine the weight of this residue and subtract it from the sample weight determined in Section 14.1.1.5 to determine the weight of the waste sample that will be filtered.

14.1.1.8 Gradually apply pressure of 1-10 psi, until air or pressurizing gas moves through the filter. If this point is not reached under 10 psi, and if no additional liquid has passed through the filter in any 2-minute interval, slowly increase the pressure in 10 psi increments to a maximum of 50 psi. After each incremental increase of 10 psi, if the pressurizing gas has not moved through the filter, and if no additional liquid has passed through the filter, or when liquid flow has ceased at 50 psi (i.e., filtration does not result in any additional filtrate within any 2 minute period), stop the filtration.

NOTE: Instantaneous application of high pressure can degrade the glass fiber filter and may cause premature plugging.

14.1.1.9 The material in the filter holder is defined as the solid phase of the waste, and the filtrate is defined as the liquid phase.

NOTE: Some wastes, such as oily wastes and some paint wastes, will obviously contain some material that appears to be a liquid. Even after applying pressure filtration, as outlined in Section 14.1.1.8, this material may not filter. If this is the case, the material within the filtration device is defined as a solid. Do not replace the original filter with a fresh filter under any circumstances. Use only one filter.

14.1.1.10 Determine the weight of the liquid phase by subtracting the weight of the filtrate container (see Section 14.1.1.3) from the total weight of the filtrate-filled container. Determine the weight of the solid phase of the waste sample by subtracting the weight of the liquid phase from the weight of the total waste sample, as determined in Section 14.1.1.5 or 14.1.1.7. Record the weight of the liquid and solid phases. Calculate the percent solids:

$$\text{Percent solids} = \frac{\text{Weight of solid (Section 14.1.1.9)}}{\text{Total weight of waste (Section 14.1.1.5 or 14.1.1.7)}} \times 100$$

14.1.2 If the percent solids determined in Section 14.1.1.10 is equal to or greater that 0.5%, then proceed either to Section 14.1.3 to determine whether the solid material requires particle size reduction or to

the next section 14.1.2.1 if it is noticed that a small amount of the filtrate is entrained on the filter. If the percent solids determined in Section 14.1.1.10 is less than 0.5%, then proceed to Section 14.2.13 if the non-volatile LP is to be performed and to Section 14.3 with a fresh portion of the waste if the volatile LP is to be performed.

14.1.2.1 Remove the solid phase and the filter from the filtration apparatus.

14.1.2.2 Dry the filter and solid phase at 100 ± 20°C until two successive weighings yield the same value within ± 1%. Record the final weight.

14.1.2.3 Calculate the percent dry solids as follows:

$$\text{Percent dry solids} = \frac{\text{(Weight of dry waste + filter) – tared weight of filter}}{\text{Initial weight of waste (Section 14.1.1.5 or 14.1.1.7)}} \times 100$$

14.1.2.4 If the percent dry solids is less than 0.5%, then proceed to Section 14.2.13 if the non-volatile LP is to be performed, and to Section 14.3 if the volatile LP is to be performed.

If the percent dry solids is greater than or equal to 0.5%, and if the non-volatile LP is to be performed, return to the beginning of Section 14.1 and, with a fresh portion of waste, determine whether particle size reduction is necessary (Section 14.1.3) then determine the appropriate extraction fluid for TCLP or SPLP (Section 14.1.4 and 14.1.5).
For ASTM always use extraction fluid #3

If only the volatile LP is to be performed, proceed to section 14.3 and use extraction fluid #1 for TCLP and extraction fluid #3 for SPLP.

14.1.3 Determination of whether the waste requires particle size reduction (particle size is reduced during this step): Using the solid portion of the waste, evaluate the solid for particle size. Particle size reduction is required, unless the solid has a surface area per gram of material equal to or greater that 3.1 cm^2, or is smaller than 1 cm in its narrowest dimension (i.e., is capable of passing through a 9.5 mm (0.375 inch standard sieve). If the surface area is smaller or the particle size larger than described above, prepare the solid portion of the waste for extraction by crushing, cutting, or grinding the waste to a surface area or particle size as described above. If the solids are prepared for organic volatiles extraction, special precautions must be taken (see Section 14.3.6).

NOTE: Surface area criteria are meant for filamentous (e.g., paper, cloth, and similar) waste materials. Actual measurement of surface area is not required, nor is it recommended. For materials that do not obviously meet the criteria, sample-specific methods would need to be developed and employed to measure the surface area. Such methodology is currently not available.

14.1.4 Determination of appropriate extraction fluid for TCLP.

If the solid content of the waste is greater than or equal to 0.5% and if the sample will be extracted for non-volatile constituents (Section 14.2), determine the appropriate fluid (Section 10.2.8) for the non-volatiles extraction as follows:

14.1.4.1 Weigh out a small subsample of the solid phase of the waste, reduce the solid (if necessary) to a particle size of approximately 1 mm in diameter or less, and transfer 5.0 grams of the solid phase of the waste to a beaker.

14.1.4.2 Add 96.5 mL of reagent water to the beaker and stir vigorously for 5 minutes using a magnetic stirrer. Measure and record the pH. If the pH is <5.0, use extraction fluid #1. Proceed to Section 14.2.

14.1.4.3 If the pH from section 14.1.4.2 is >5.0, add 3.5 mL 1N HCl, slurry briefly, heat to 50°C, and hold at 50°C for 10 minutes.

14.1.4.4 Let the solution cool to room temperature and record the pH. If the pH is <5.0, use extraction fluid #1. If the pH is >5.0, use extraction fluid #2. Proceed to section 14.2.

14.1.5 For Determination of the appropriate extraction fluid for SPLP:

14.1.5.1 For soils, if the sample is from a site that is east of the Mississippi, extraction fluid #4 should be used. If the sample is from a site that is west of the Mississippi River, extraction fluid #5 should be used.

14.1.5.2 For wastes and wastewater, extraction fluid #4 should be used.

14.1.5.3 For cyanide-containing wastes and/or soils, extraction fluid #3 (reagent water) must be used because leaching of cyanide-containing samples under acidic conditions may result in the formation of hydrogen cyanide gas.

14.1.6 If the aliquot of the waste used for the preliminary evaluation (Sections 14.1.1 – 14.1.5) was determined to be 100% solid at Section 14.1.1.1, then it can be used for the Section 14.2 extraction. If the aliquot was subjected to the procedure in Section 14.1.1.7, then another aliquot shall be used for the volatile extraction procedure in Section 14.3. The aliquot of the waste subjected to the procedure in 14.1.1.7 might be appropriate for use for the Section 14.2 extraction if an adequate amount of solid (determined by Section 14.1.1.10) was obtained. The amount of solid necessary is dependent upon whether a sufficient amount of extract will be produced to support the analyses. If an adequate amount of solid remains, proceed to section 14.2.10 of the non-volatile LP extraction.

14.2 Procedure When Volatiles Are Not Involved

A sample size up to 45 grams is recommended. In some cases, a larger sample size may be appropriate, depending on the solids content of the waste sample (percent solids, See Section 14.1.1), whether the initial liquid phase of the waste will be miscible with the aqueous extract of the solid, and whether inorganics, semi-volatile organics, pesticides, and herbicides are all analytes of concern. Enough solids should be generated for all extraction such that the volume of LP extract will be sufficient to support all of the analyses required. If the amount of extract generated by a single LP extraction will not be sufficient to perform all of the analyses, more than one extraction may be performed and the extracts from each combined and aliquoted for analysis.

14.2.1 If the waste will obviously yield no liquid when subjected to pressure filtration (i.e., is 100% solid, see Section 14.1.1), weigh out a subsample of the waste and proceed to Section 14.2.10.

14.2.2 If the sample is liquid or multiphasic, liquid/solid separation is required. This involves the filtration device described in Section 9.3.2 and is outlined in Section 14.2.3 to 14.2.8.

14.2.3 Pre-weigh the container that will receive the filtrate.

14.2.4 Assemble the filter holder and filter following the manufacturer's instructions. Place the filter on the support screen and secure. Acid wash the filter if evaluating the mobility of metals (see Section 9.4)

NOTE: Acid washed filters may be used for all non-volatile extractions even when metals are not of concern.

14.2.5 Weigh out a subsample of the waste and record the weight. If the waste contains <0.5% dry solids (Section 14.1.2) the liquid portion of the waste, after filtration, is defined as the LP extract. Therefore, enough of the sample should be filtered so that the amount of filtered liquid will support all of the analyses required of the LP extract. For wastes containing ≥0.5% dry solids (Sections 14.1.1 or 14.1.2), use the percent solids information obtained in Section 14.1.1 to determine the optimum sample size for filtration. Enough solids should be generated by filtration to support the analyses to be performed on the LP extract.

14.2.6 Allow slurries to stand to permit the solid phase to settle. Wastes that settle slowly may be centrifuged prior to filtration. Use centrifugation only as an aid to filtration. If the waste is centrifuged, the liquid should be decanted and filtered followed by filtration of the solid portion of the waste through the same filtration system.

14.2.7 Quantitatively transfer the waste sample (liquid and solid phases) to the filter holder (Section 9.3.2). Spread the waste sample evenly over the surface of the filter.

NOTE: If waste material (>1% of the original sample weight) has obviously adhered to the container used to transfer the sample to the filtration apparatus, determine the weight of this residue and subtract it from the sample weight determined in Section 14.2.5, to determine the weight of the waste sample that will be filtered.

14.2.8 Gradually apply a pressure of 1-10 psi, until air or pressurizing gas moves through the filter. If this point is not reached under 10 psi, and if no additional liquid has passed through the filter in any 2-

minute interval, slowly increase the pressure in 10 psi increments to a maximum of 50 psi. After each incremental increase of 10 psi, if the pressurizing gas has not moved through the filter, and if no additional liquid has passed through the filter, or when liquid flow has ceased at 50 psi (i.e., filtration does not result in any additional filtrate within any 2 minute period), stop the filtration.

NOTE: Instantaneous application of high pressure can degrade the glass fiber filter and may cause premature plugging.

14.2.9 The material in the filter holder is defined as the solid phase of the waste, and the filtrate is defined as the liquid phase. Weigh the filtrate. The liquid phase may now be either analyzed (see Section 14.2.12) or stored at 0.1-6°C until time of analyses.

NOTE: Some wastes, such as oily wastes and some paint wastes, will obviously contain some material that appears to be a liquid. Even after applying pressure filtration, as outlined in Section 14.2.8, this material may not filter. If this is the case, the material within the filtration device is defined as a solid and is carried through the extraction as a solid. Do not replace the original filter with a fresh filter under any circumstances. Use only one filter.

14.2.10 Transfer the solid material into the extractor bottle (after particle size reduction, if needed) along with the filter used to separate the initial liquid from the solid phase, and proceed to Section 14.2.11.

14.2.11 Determine the amount of extraction fluid to add to the extractor vessel as follows:

$$\text{Weight of extraction fluid} = \frac{20 \times \text{percent solids (Section 14.1.1)} \times \text{weight of waste filtered (Section 14.2.5 or 14.2.7)}}{100}$$

Slowly add this amount of appropriate extraction fluid (see Section 14.1.4 or 14.1.5) to the extractor vessel. Close the extractor bottle tightly (it is recommended that Teflon tape be used to ensure a tight seal), secure in rotary agitation device, and rotate at 30 ± 2 rpm for 18 ± 2 hours. Ambient temperature (i.e., temperature of room in which extraction takes place) shall be maintained at 23 ± 2°C during extraction period.

NOTE: For ASTM rotate for 18 hours ± 15 minutes.

NOTE: As agitation continues, pressure may build up within the extractor bottle for some types of wastes (e.g., limed or calcium carbonate containing waste may evolve gases such as carbon dioxide). To relieve excess pressure, the extractor bottle may be periodically opened (e.g., after 15 minutes, 30 minutes, and 1 hour) and vented into a hood.

14.2.12 Following the extraction, separate the material in the extractor vessel into its component liquid and solid phases by filtering through a new glass fiber filter, as outlined in Section 14.2.7. For final filtration of the LP extract, the glass fiber filter may be changed, if necessary, to facilitate filtration. Filter(s) shall be acid washed (see Section 9.4) if evaluating the mobility of metals.

14.2.13 Prepare the LP extract as follows:

14.2.13.1 If the waste contained no initial liquid phase, the filtered liquid material obtained after rotation (section 14.2.11) is defined as the LP extract. Proceed to section 14.2.14.

14.2.13.2 If compatible (e.g., multiple phases will not result on combination), combine the filtered liquid after rotation (section 14.2.11) with the initial liquid phase of the waste obtained in Section 14.2.9. This combined liquid is defined as the LP extract. Proceed to Section 14.2.14.

14.2.13.3 If the initial liquid phase of the waste as obtained in Section 14.2.9, is not or may not be compatible with the filtered liquid resulting from Section 14.2.12, do not combine these liquids. Analyze these liquids separately (they are collectively defined as the LP extract), and combine the results mathematically, as described in Section 14.2.14.

14.2.14 Following collection of the LP extract, the pH of the extract should be recorded. Immediately aliquot and preserve the extract for analysis. Metals aliquots must be acidified with nitric acid to pH <2. If precipitation is observed upon addition of nitric acid to a small aliquot of the extract, then the remaining portion of the extract for metals analysis shall not be acidified and the extract shall be analyzed as soon as possible. All other aliquots must be stored under refrigeration (0.1-6°C) until analyzed. The LP extract shall be prepared and analyzed according to appropriate analytical methods. LP extracts to be analyzed for metals shall be acid digested except in those instances where digestion causes loss of metallic analytes. If an analysis of the undigested extract shows that the concentration of any regulated metallic analyte exceeds the regulatory level, then the waste is hazardous and digestion of the extract is not necessary. However, data on undigested extracts alone cannot be used to demonstrate that the waste is not hazardous. If the individual phases are to be analyzed separately, determine the volume of the individual phases (to ± 0.5%), conduct the appropriate analyses, and combine the results mathematically by using a simple volume-weighted average:

$$\text{Final Analyte Concentration} = \frac{(V_1)(C_1) + (V_2)(C_2)}{V_1 + V_2}$$

Where:

V_1 = The volume of the first phase (L).
C_1 = The concentration of the analyte of concern in the first phase (mg/L).
V_2 = The volume of the second phase (L).
C_2 = The concentration of the analyte of concern in the second phase (mg/L).

14.3 Procedure When Volatiles are Involved

Use the ZHE to obtain LP extract for analysis of volatile compounds only. Extract resulting from the use of the ZHE shall not be used to evaluate the mobility of non-volatile analytes (e.g., metals, pesticides, etc.).

The ZHE device has approximately 500 mL internal capacity. The ZHE can thus accommodate a maximum of 25 grams of solid (defined as that fraction of a sample from which no additional liquid may be forced out by an applied pressure of 50 psi), due to the need to add an amount of extraction fluid equal to 20 times the weight of the solid phase.

Charge the ZHE with sample only once and do not open the device until the final extract (of the solid) has been collected. Repeated filling of the ZHE to obtain 25 grams of solid is not permitted.

Do not allow the waste, the initial liquid phase, or the extract to be exposed to the atmosphere for any more time than is absolutely necessary. Any manipulation of these materials should be done when cold (0.1-6°C) to minimize loss of volatiles.

14.3.1 Pre-weigh the extract collection container ECC (see Section 9.6) and set aside. Express an appropriate amount of liquid from the ZHE device into the ECC whether for the initial or final liquid/solid separation, and take an aliquot from the liquid for analysis. The ECCs listed in Section 9.6 are recommended for use under the conditions stated in Sections 9.6.1 – 9.6.2.

14.3.2 Place the ZHE piston within the body of the ZHE (it may be helpful to first moisten the piston O-rings slightly with extraction fluid). Adjust the piston within the ZHE body to a height that will minimize the distance the piston will have to move once the ZHE is charged with sample (based upon sample size requirements determined from Section 14.3, Section 14.1.1 and/or 14.1.2). Secure the gas inlet/outlet flange (bottom flange) onto the ZHE body in accordance with the manufacturer's instructions. Secure the glass fiber filter between the support screens and set aside. Set liquid inlet/outlet flange (top flange) aside.

14.3.3 If the waste is 100% solid, (see Section 14.1.1), weigh out a subsample (25 gram maximum) of the waste, record weight, and proceed to Section 14.3.5.

14.3.4 If the waste contains < 0.5% dry solids (Section 14.1.2), the liquid portion of waste after filtration, is defined as the LP extract. Filter enough of the sample so that the amount of filtered liquid will support all of the volatile analyses required. For wastes containing ≥ 0.5% dry solids (Sections 14.1.1 and/or 14.1.2), use the percent solids information obtained in Section 14.1.1 to determine the optimum sample size to charge into the ZHE. The recommended sample size is as follows:

$$\text{Weight of waste to charge ZHE} = \frac{25}{\text{Percent solids (Section 14.1.1)}} \times 100$$

Weigh out a subsample of the waste of the appropriate size and record the weight.

14.3.5 If particle size reduction of the solid portion of the waste was required in Section 14.1.3, proceed to Section 14.3.6. If particle size reduction was not required in Section 14.1.3, proceed to Section 14.3.7.

14.3.6 Prepare the waste for extraction by crushing, cutting, or grinding the solid portion of the waste to a surface area or particle size as described in Section 14.1.3. Wastes and appropriate reduction

equipment should be refrigerated, if possible, to 0.1-6°C prior to particle size reduction. The means used to effect particle size reduction must not generate heat in and of itself. If reduction of the solid phase of the waste is necessary, exposure of the waste to the atmosphere should be avoided to the extent possible.

NOTE: Sieving of the waste is not recommended due to the possibility that volatiles may be lost. The use of an appropriately graduated ruler is recommended as an acceptable alternative. Surface area requirements are meant for filamentous (e.g., paper, cloth) and similar waste materials. Actual measurement of surface area is not recommended.

When the surface area or particle size has been appropriately altered, proceed to Section 14.3.7.

14.3.7 Waste slurries need not be allowed to stand to permit the solid phase to settle. Do not centrifuge wastes prior to filtration.

14.3.8 Quantitatively transfer the entire sample (liquid and solid phases) quickly to the ZHE. Secure the filter and support screens onto the top flange of the device and secure the top flange to the ZHE body in accordance with the manufacturer's instructions. Tighten all ZHE fittings and place the device in the vertical position (gas inlet/outlet flange on the bottom). Do not attach the extract collection device to the top plate.

NOTE: If waste material (>1% of original sample weight) has obviously adhered to the container used to transfer the sample to the ZHE, determine the weight of this residue and subtract it from the sample weight determined in Section 14.3.4 to determine the weight of the waste sample that will be filtered.

Attach a gas line to the gas inlet/outlet valve (bottom flange) and, with the liquid inlet/outlet valve (top flange) open, begin applying gentle pressure of 1-10 psi (or more if necessary) to force all headspace slowly out of the ZHE device into a hood. At the first appearance of liquid from the liquid inlet/outlet valve, quickly close the valve and discontinue pressure. If the waste is 100% solid (see Section 14.1.1), slowly increase the pressure to a maximum of 50 psi to force most of the headspace out of the device and proceed to Section 14.3.12.

14.3.9 Place the pre-weighed ECC under the liquid inlet/outlet valve and open the valve. Begin applying gentle pressure of 1-10 psi to force the liquid phase of the sample into the filtrate collection container. If no additional liquid has passed through the filter in any 2-minute interval, slowly increase the pressure in 10 psi increments to maximum of 50 psi. After each incremental increase of 10 psi, if no additional liquid has passed through the filter in any 2 minute interval, proceed to the next 10 psi increment. When liquid flow has ceased such that continued pressure filtration at 50 psi does not result in any additional filtrate within any 2-minute period, stop the filtration. Close the liquid inlet/outlet valve, discontinue pressure to the piston, and disconnect and weigh the filtrate collection container.

NOTE: Instantaneous application of high pressure can degrade the glass fiber filter and may cause premature plugging.

14.3.10 The material in the ZHE is defined as the solid phase of the waste and the filtrate is defined as the liquid phase.

NOTE: Some wastes, such as oily wastes and some paint wastes, will obviously contain some material that appears to be a liquid. Even after applying pressure filtration, this material will not filter. If this is the case, the material within the filtration device is defined as a solid and is carried through the LP extraction as a solid.

If the original waste contained <0.5% dry solids (see Section 14.1.2), this filtrate is defined as the LP extract and is analyzed directly. Proceed to section 14.3.16.

14.3.11 The liquid phase may now be either analyzed immediately (see Sections 14.3.13 through 14.3.15) or stored at 0.1-6°C under minimal headspace conditions until time of analysis.

Determine the weight of extraction fluid #1 to add to the ZHE for TCLP,

or

determine the weight of extraction fluid #3 to add to the ZHE for SPLP as follows:

$$\text{Weight of extraction fluid} = \frac{20 \times \text{percent solids (Section 14.1.1)} \times \text{weight of waste to charge the ZHE (Section 14.3.4 or 14.3.8)}}{100}$$

14.3.12 The following sections detail how to add the appropriate amount of extraction fluid to the solid material within the ZHE and agitation of the ZHE vessel. Extraction fluid #1 is used in all cases for TCLP. Extraction fluid #3 is used in all cases for SPLP.

14.3.12.1 With the ZHE in the vertical position, attach a line from the extraction fluid reservoir to the liquid inlet/outlet valve. The line used shall contain fresh extraction fluid and should be pre-flushed with fluid to eliminate any air pockets in the line. Release gas pressure on the ZHE piston (from the gas inlet/outlet valve), open the liquid inlet/outlet valve, and begin transferring extraction fluid (by pumping or use of a syringe or similar means) into the ZHE. Continue pumping extraction fluid into the ZHE until the appropriate amount of fluid has been introduced into the device.

14.3.12.2 After the extraction fluid has been added, immediately close the liquid inlet/outlet valve and disconnect the extraction fluid line. Check the ZHE to ensure that all valves are in their closed positions. Reposition the ZHE in the vertical position with the liquid inlet/outlet valve on top. Pressurize the ZHE to 5-10 psi (if necessary) and slowly open the liquid inlet/outlet valve to bleed out any headspace (into a hood) that may have been introduced due to the addition of extraction fluid. This bleeding shall be done quickly and shall be stopped at the first appearance of liquid from the valve.

14.3.12.3 Re-pressurize the ZHE to 50 psi and check all ZHE fittings to ensure that they are closed and record the pressure. Let stand for 1 hour. Check and record the pressure again. If the pressure has not changed, depressurize to 5-10 psi and proceed to the next step. If the pressure has changed, check the fittings to determine the source of the leak and try to correct. If the problem was corrected repeat this step (Section 14.3.12.3).

14.3.12.4 Place the ZHE in the rotary agitation apparatus (if it is not already there) and rotate at 30 ± 2 rpm for 18 ± 2 hours. Ambient temperature shall be maintained at 23 ± 2°C during agitation.

14.3.13 Following the agitation period, check and record the pressure behind the ZHE piston. If pressure has not been maintained (i.e., pressure on the gauge has dropped or no gas release is observed), the device is leaking. Check the ZHE for leaking as specified in Section 9.2.1 and perform the extraction again with a new sample of waste. If the pressure within the device has been maintained, the material in the extractor vessel is once again separated into its component liquid and solid phases.

14.3.14 If the waste contained an initial liquid phase, filter the liquid into the TEDLAR® bag that contains the initial liquid before agitation. A separate TEDLAR® bag must be used if combining would create multiple phases, or there is not enough volume left within the TEDLAR® bag. Filter through the glass fiber filter. These liquids are collectively defined as the LP extract.

If the original waste contained no initial liquid phase, filter through the glass fiber filter into 40 mL HCl preserved VOA vials. This filtered liquid is defined as the LP extract.

NOTE: An in-line glass fiber filter may be used to filter the material within the ZHE if it is suspected that the glass fiber filter has been ruptured.

14.3.15 Following collection of the LP extract, immediately prepare the extract for analysis and store with minimal headspace at 0.1-6°C until analyzed. Analyze the LP extract according to the appropriate analytical methods. If the individual phases are to be analyzed separately (i.e., are not miscible), determine the volume of the individual phases (to ± 0.5%), conduct the appropriate analyses, and combine the results mathematically by using a simple volume-weighted average:

$$\text{Final Analyte Concentration} = \frac{(V_1)(C_1) + (V_2)(C_2)}{V_1 + V_2}$$

where:

V_1 = The volume of the first phase (L).
C_1 = The concentration of the analyte of concern in the first phase (mg/L).
V_2 = The volume of the second phase (L).
C_2 = The concentration of the analyte of concern in the second phase (mg/L).

15.0 Data Reduction, Calculations and Loading

Not Applicable to the SOP

16.0 Method Performance

Not Applicable to the SOP

17.0 Pollution Prevention

The preparation of excessive volumes of laboratory reagents and standards shall be avoided so that waste and potential for pollution are minimized. Samples, reagents and standards shall be disposed in compliance with the lab waste disposal program, SOP 1130. With the consent of the client, the samples may be returned to their origin for treatment.

Uncontaminated paper waste, glass and cans should be separated for recycling. Laboratory staff are required to protect the laboratory's and our clients' business information when disposing of recycled paper or waste from the facility.

18.0 Data Assessment and Criteria for Quality Control Measures

Demonstration of Capability (DOC)

DOCs are not applicable to this procedure.

19.0 Corrective Actions for Out-Of-Control Data

The process for handling unacceptable and out of control data is found in SOP 230 Corrective Action.

20.0 Contingencies for Handling Out-Of-Control Or Unacceptable Data

Every effort is made to prevent problems from occurring. When out of control or unacceptable data occurs the first option is to identify the problem and reanalyze the samples within the holding times. When this is not possible, the QA Manager and/or the Laboratory Director reviews data and discusses options with the client. Reanalysis or reporting the data with qualification are alternatives. Out of control or unacceptable data reported to the client must include the data qualifier, flag and discussion on the rationale for reporting.

Holding time exceedance, improper preservation and improper sample condition or storage are noted on the corrective action form and included on the final report.

20.1 The process for handling unacceptable and out of control data is found in the Laboratory QAM Section 11. The reporting of data that is out of control must be approved and documented by Quality Assurance Manager and either the Technical Manager or the Laboratory Director.

20.2 Client Requested Modifications:

20.2.1 Clients must request modifications from the laboratory SOP in writing to the lab.

20.2.2 The lab director, technical manager and quality assurance manager will evaluate the requested client deviations, determine the feasibly of the deviation and the potential effects on the data.

20.2.3 If it is determined that the lab will perform the requested deviations, lab director, technical manager and quality assurance manager will decide if a method validation study is required.

20.2.4 The designated project manager will retain all documentation concerning the requested deviation, including all correspondence with the client, in the client folder.

20.2.5 The final analytical report must include the statement "*This report has analyses performed using client requested modifications* ".

21.0 Waste Management

The STAT Analysis Corporation Waste Disposal SOP 1130 identifies proper waste management practices for the chemicals used in this procedure. Samples are stored and discarded accordance with SOP 1130 Waste Disposal.

22.0 References

22.1 Method 1311, Revision 0; U.S. EPA SW-846 "Test Methods for Evaluating Solid Waste, Physical/Chemical Methods" Update III, December 1996
22.2 Method 1312, Revision 0; U.S. EPA SW-846 "Test Methods for Evaluating Solid Waste, Physical/Chemical Methods" Update III, December 1996
22.3 ASTM Method D 3987-85 Re-approved 1992
22.4 SOP 230 Corrective Actions
22.5 SOP 1010 Standard and Reagent Preparation
22.6 SOP 1400 LIMS
22.7 SOP 1130 Waste Disposal
22.8 SOP 003 Chemical Hygiene Plan
22.9 SOP 1250 Data Review
22.10 Manufacturers' Equipment Instruction Manuals
22.11 SOP 1230 Training
22.12 SOP 4210 pH of Aqueous, Soil, and Waste Samples by EPA 9040B, 9045C, 150.1
22.13 SOP 1040 General Laboratory Procedures

23.0 Forms, Figures, Tables, Diagrams, Flowcharts, Attachments or Validation Data

23.1 Figure 1 and Figure 2: Agitation Apparatus and Zero Headspace Extractor (ZHE).

23.2 Flowchart 1: Leaching Procedure Flowchart from Method 1311, Revision 0; U.S. EPA SW-846 "Test Methods for Evaluating Solid Waste, Physical/Chemical Methods" Update III, December 1996

23.3 Flowchart 2: Leaching Procedure Flowchart from Method 1312, Revision 0; U.S. EPA SW-846 "Test Methods for Evaluating Solid Waste, Physical/Chemical Methods" Update III, December 1996

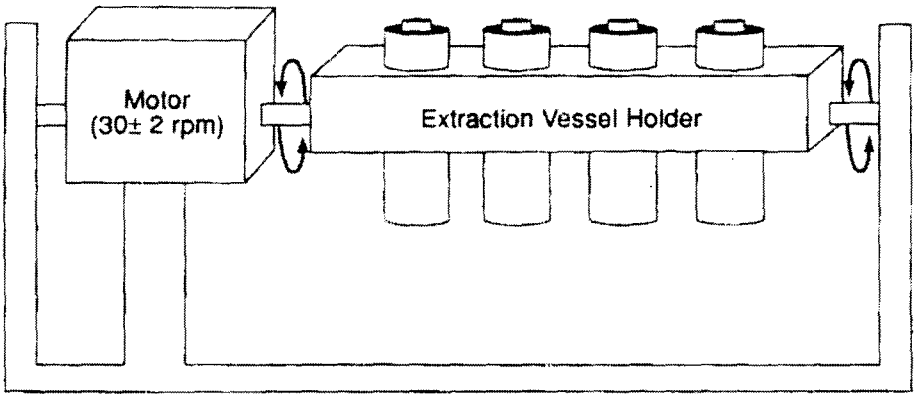

Figure 1. Rotary Agitation Apparatus

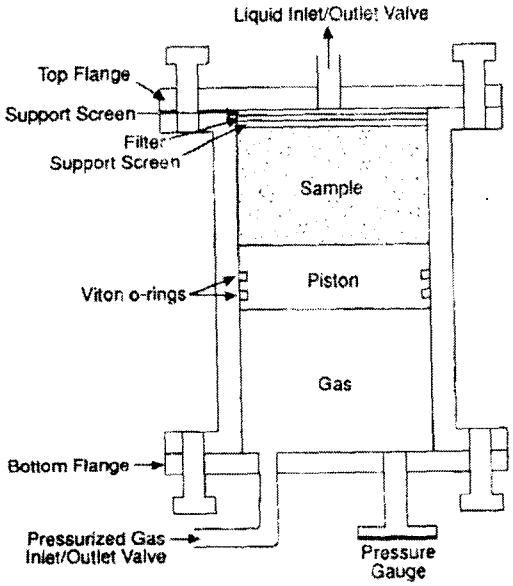

Figure 2. Zero-Headspace Extractor (ZHE)

METHOD 1311

TOXICITY CHARACTERISTIC LEACHATE PROCEDURE

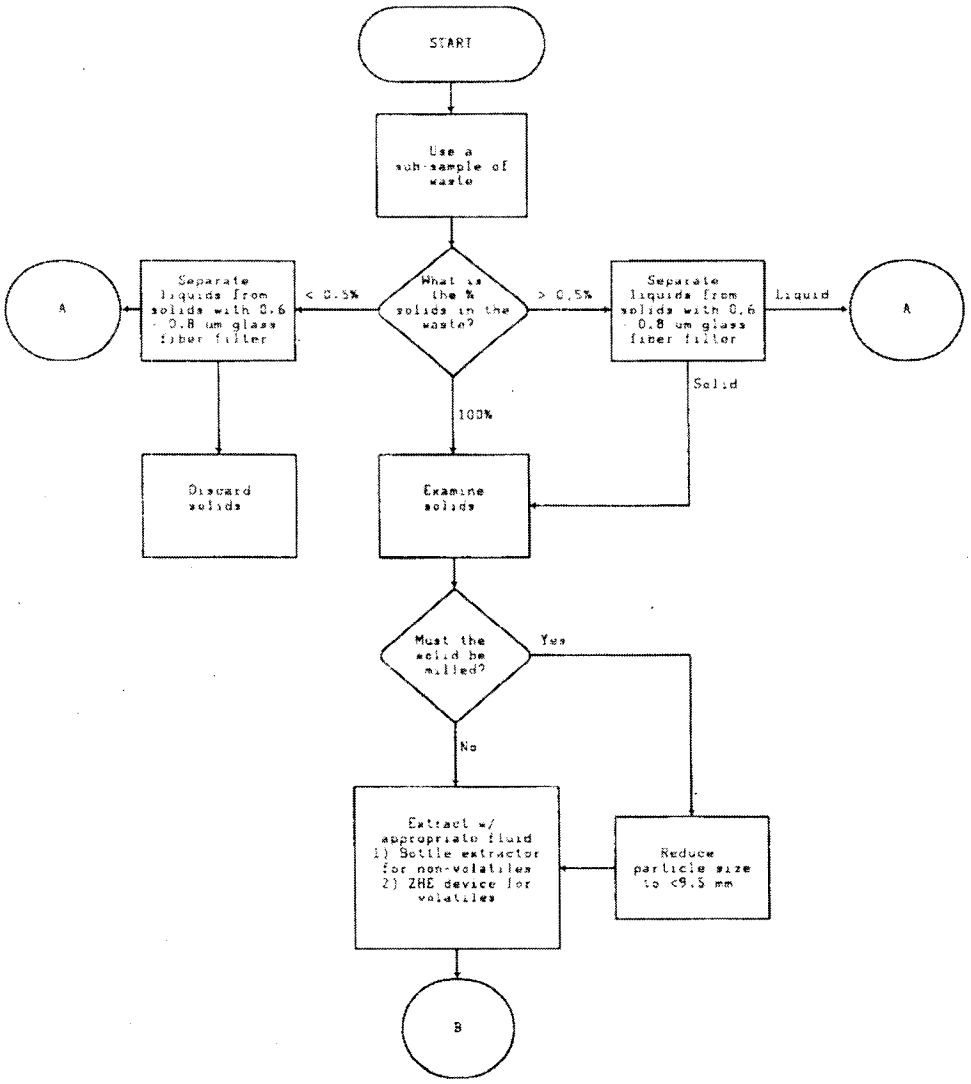

METHOD 1311 (CONTINUED)

TOXICITY CHARACTERISTIC LEACHATE PROCEDURE

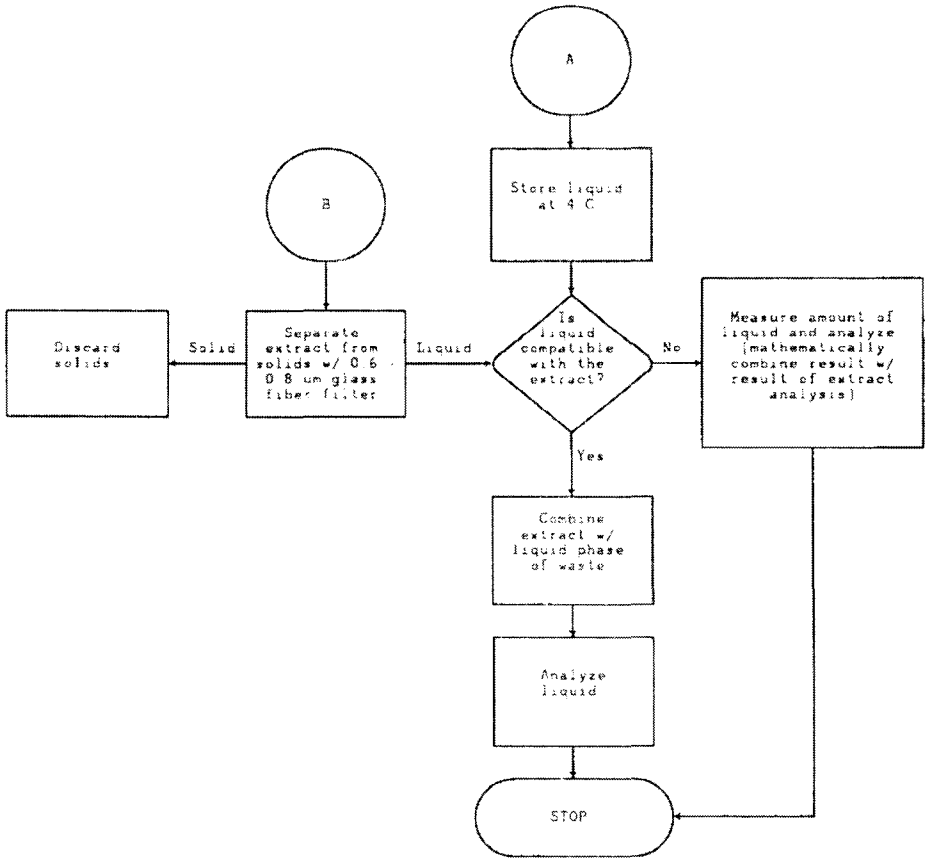

METHOD 1312

SYNTHETIC PRECIPITATION LEACHING PROCEDURE

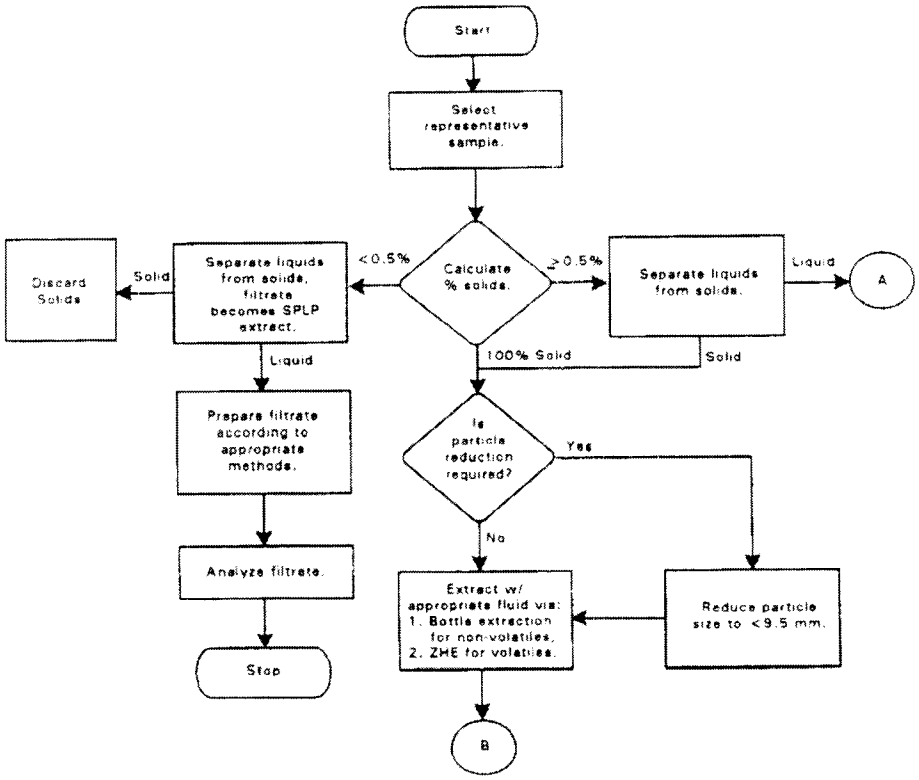

METHOD 1312

SYNTHETIC PRECIPITATION LEACHING PROCEDURE (continued)

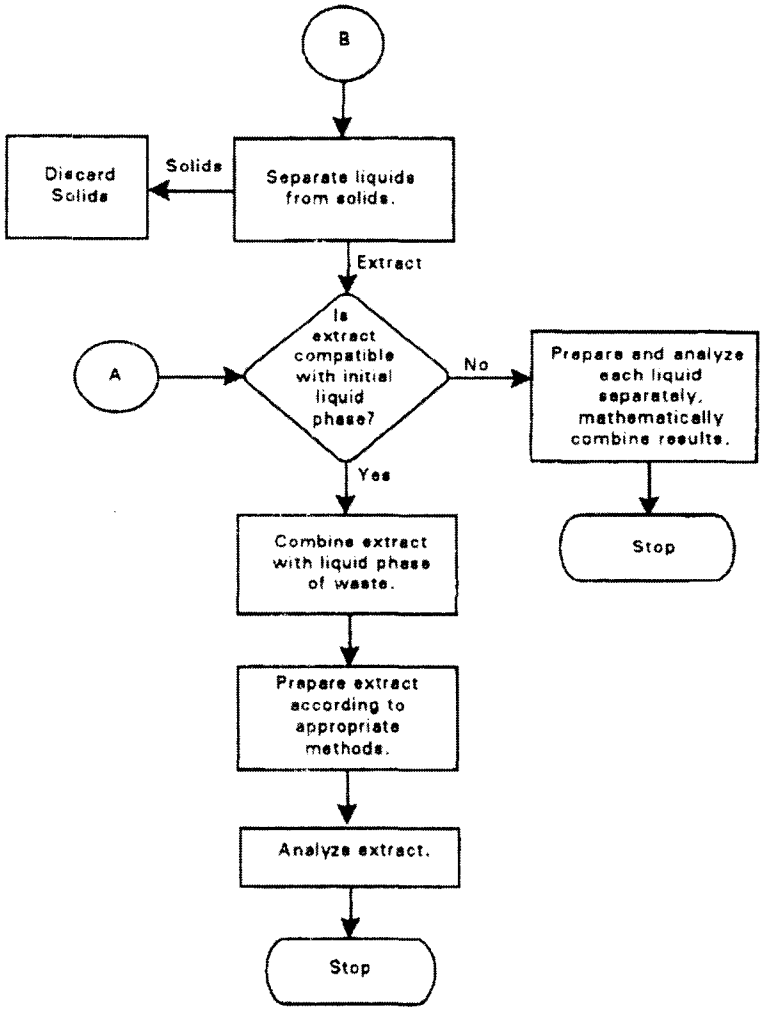

SOP ADDENDUM

SOP TITLE: SOP 2125 Leaching Procedures
Revision 00, Effective Date: 6/2/03.

Issued by Laurie Fetterman, QA Manager LF 10/31/03

Approved by: Dennis Jachim, Technical Manager DJ 10/31/03

Date of Issue: October 31, 2003

The following information is added to the SOP:

Section 2. (edit this section, additions are *italicized*)

This method is applicable to the following matrices: aqueous, drinking waters, Saline/Estuarine, non-aqueous liquid, biological tissue, solids (including soils, sediments, sludges and other matrices with >15% settleable solids), chemical waste, and air and emissions.

Section 5. (edit this section, additions are *italicized*)

5.4.1 Sample amounts used are varied based upon analytical tests requirements. *The laboratory tumbles enough sample to generate extract to support the analyses requested. Waste, minimizing the amount of laboratory waste. If additional analyses are requested or upon customer request, the laboratory can leach more sample.* Sample extracts for volatile organic analysis are expressed directly into 40 mL VOA vials according to criteria in Section 9.6.2. *These vials allow for automated analysis of the sample. If the leachate were first expressed into a TEDLAR® bags, then it would need to be transferred into a 40 mL vial. This step minimizes sample handling.*

5.4.2 Samples for ASTM are rotated at 30±2 rpm and filtered through a 0.6 to 0.8 um glass fiber filter. *The filters are used to comply with the TCLP standards.*

5.4.3 Preliminary evaluations are not done using a minimum 100 g aliquot. *There is usually not enough sample for this preliminary step. Thus, samples are leached and analyzed directly. This also minimizes the amount of waster generated.*

5.4.4 Preliminary evaluations are not done using a minimum 100g aliquot. *This modification is only performed when there is insufficient sample. Otherwise, 100g sample is used for preliminary evaluation.*

Section 14.4 Procedure (edit this section, additions are italicized

Records: Leaching Procedure Records will contain, at a minimum, the following:

1) *Lab sample ID code*
2) *Date and Time of analysis*
3) *ZHE vessel number*
4) *Analysis type*
5) *All manual calculations*
6) *Analyst's initials or signature.*

The initials/signature of the QA Manager and the Technical Manager indicate that this is a controlled document.

Section 16.0 Method Performances (edit this section, additions are *italicized*)

16.1 Ruggedness. The Laboratory has relied on the ruggedness testing listed in Method 1311 of SW-846. Two ruggedness studies have been performed by EPA to determine the effect of various perturbations on specific elements of the leaching procedure protocol. (The Laboratory has relied on the ruggedness testing listed in Method 1311 of SW-846.) Ruggedness testing determines the sensitivity of small procedural variations, which might be expected to occur during routine laboratory application.

16.1.1 Metals – The following conditions were used when leaching a waste for metals analysis:

Varying Conditions

Liquid/Solid Ratio	*19:1 vs. 21:1*
Extraction time	*16 hours vs. 18 hours*
Headspace	*20% vs. 60%*
Buffer #2 acidity	*190 meq vs. 210 meq*
Acid-washed filters	*yes vs. no*
Filter type	*0.7 um glass fiber vs. 0.45 um vs. polycarbonate*
Bottle type	*borosilicate vs. flint glass*

Of the seven method variations examined, acidity of the extraction fluid had the greatest impact on the results. Four of 13 metals from an API separator sludge/electroplating waste (API/EW) mixture and two of three metals from an ammonia lime still bottom were extracted at higher levels by the more acidic buffer. Because of the sensitivity to pH changes, the method requires that the extraction fluids be prepared so that the final pH is within ±0.05 pH units as specified.

16.1.2 Volatile Organic Compounds – The following conditions were used when leaching a waste for VOC analysis:

Varying Conditions

Liquid/Solid Ratio	*19:1 vs. 21:1*
Headspace	*0% vs. 5%*
Buffer #1 acidity	*60 meq vs. 80 meq*
Method of storing extract	*Syringe vs. Tedlar bag*
Aliquotting	*yes vs. no*
Pressure behind piston	*0 psi vs. 20 psi*

None of the parameters had a significant effect on the results of the ruggedness test.

23. Attachments. (edits this section, additions are *italicized*

Attachment 1: Leaching Procedures Prep Logbook Page

END OF ADDENDUM

The initials/signature of the QA Manager and the Technical Manager indicate that this is a controlled document.

TCLP Preparation Logbook

Reviewed by: _____

Stat Sample ID:										
Jar Number:										
Matrix:										
Analyst:										
% SOLIDS DETERMINATION:										
Weight of Sample (g.) (A):										
Weight of Dry Filter (E):										
Wt. of Dry Filter + % Dry Solids (F):										
Weight of Empty Beaker (B):										
Weight of Beaker + Filtrate (C):										
% Solids (D): (A-(C-B))/A) x 100:										
or % Dry Solids (G): ((F-E)/A) x100:										
Primary Leachate Volume (mL):										
EXTRACTION FLUID DETERMINATION:										
pH 1: 5 g sample + 96.5 mL DI, stir 5 min., if pH <5 use fluid #1, if >5 add 3.5 mL 1M HCl, heat to 50°C and hold for 10 min., cool to 25°C, measure pH (=pH 2)										
pH 2: If pH 2 <5, use fluid #1, if pH2 >5, use fluid #2										
Extraction Fluid Used (1or 2) and pH: (pH of Fluid 1 = 4.88-4.98, Fluid 2 = 2.83-2.93)										
ACTUAL TCLP SET-UP:										
Weight of sample (g.):										
Amount of Extraction Fluid used = (20 x D x g)/100:										
Date/Time Started:										
Date/Time Stopped:										
Temperature Range (°C):	-	-	-	-	-	-	-	-	-	-
ZHE Pressure (psi) Initial/Post Rotation/Final										
Vessel Number or Disposable:										
Filtration Unit #										
pH before Filtration										
Acid Preserved (Initials)										

Comments: _____

STAT Analysis Corporation:

STANDARD OPERATING PROCEDURE 4000

VOLATILE ORGANIC COMPOUNDS BY GAS CHROMATOGRAPHY/MASS SPECTROMETRY (GC/MS) (EPA Methods 5030B/5035/8260B)

Revision 04
Effective Date: February 11, 2003

Authors: Petra Svacha/ Thomas Bauer

Printed Name	Signature/Date
Jeremiah J. Favero Organic Manager	_____
Ian H. Graske QA Manager	_____
Dennis Jachim Technical Manager	_____
Thomas M. Bauer Laboratory Director	_____

This Standard Operating Procedure has been prepared for the sole use of STAT Analysis Corporation.

Copy Number: _____

The absence of a Copy Number indicates this is an uncontrolled copy of the document supplied for information only.

Table of Contents

Title Page 1
Table of Contents 2
1. Identification of Test Method 3
2. Applicable Matrix or Matrices 3
3. Detection Limits 3
4. Scope and Application 3
5. Summary of Test Method 4
6. Definitions 4
7. Interferences 4
8. Safety 5
9. Equipment and Supplies 5
10. Reagents and Standards 6
11. Sample Collection, Preservation, Shipment and Storage 11
12. Quality Control 12
13. Calibration and Standardization 13
14. Procedure 18
15. Data Reduction, Calculations and Loading 24
16. Method Performance 25
17. Pollution Prevention 26
18. Data Assessment and Criteria For Quality Control Measures 26
19. Corrective Actions for Out-Of-Control Data 28
20. Contingencies for Handling Out-Of-Control Or Unacceptable Data 29
21. Waste Management 30
22. References 30
23. Forms, Figures, Tables, Diagrams, Flowcharts, Attachments or Validation Data 31
Attachment 1 MDLs and Reporting Limits for Volatile Compounds 31
Attachment 2 Characteristic Ions for Volatile Compounds 33
Attachment 3 Surrogate Recovery Limits for Volatile Compounds 35
Attachment 4 MS/MSD Recovery Limits for Volatile Compounds 36
Attachment 5 Internal Standard Compound Assignments 37
Attachment 6 Soil Preparation Log Book Page 38

1.0 IDENTIFICATION OF TEST METHOD

SOP Title: Volatile Organic Compounds by Gas Chromatography/Mass Spectrometry (GC/MS) is abbreviated as VOC in laboratory records.

2.0 APPLICABLE MATRICES

This method is also applicable to nearly all types of samples, regardless of water content, including, but not limited to, ground and surface water, mobility extracts, aqueous sludges, caustic liquors, acid liquors, waste solvents, oily wastes, mousses, tars, fibrous wastes, polymeric emulsions, filter cakes, spent carbons, spent catalysts, soils, and sediments. Purge-and-trap by Methods SW-846 5030 (aqueous samples) and SW-846 5035 (solid and waste oil samples) are the preparation techniques used in this SOP.

In addition, other preparation techniques are also appropriate and necessary for some additional compounds not routinely analyzed using this SOP (see Method SW-846 8260B). These additional preparation techniques and non-routine compounds are not addressed in this SOP.

3.0 DETECTION LIMITS

The lab follows the procedure found in 40CFR Part 136B to determine the MDL for each matrix type on an annual basis. See the STAT Analysis SOP 1210 for the MDL procedure, frequency and acceptance criteria. The MDLs measured by the lab and all supporting documentation are in the laboratory QA files for review.

The laboratory determined MDL must always be less than the reporting limit (RL), which is determined by the lowest calibration standard. The RLs will usually range from three to ten times the laboratory measured MDLs but this relationship may vary dependent on dilution of sample aliquots, matrix interferences, moisture adjustments (in solid samples), or method-specified requirements. Attachment 1 contains the current MDLs and reporting limits (RLs) for this SOP.

4.0 SCOPE AND APPLICATION

4.1 This standard operating procedure describes in detail the precise methods used at STAT Analysis Corporation for the analysis of environmental samples for Volatile Organic Compounds (VOCs) by GC-MS. This SOP as written is to be applied when Method SW-846 8260B is requested. This SOP is used to determine the concentration of VOC's in all types of solid waste matrices, soils, and various types of water.

4.2 SOP 4000 can be used to quantify most VOCs that have both boiling points below 200°C and are either insoluble or slightly soluble in water. Volatile water-soluble compounds can be included in this analytical technique; however, for more soluble compounds, quantitation limits are approximately ten times higher due to poor extraction efficiencies from water. The SOP is also limited to compounds that elute as sharp peaks from a GC non-polar capillary column. Such compounds include low-molecular weight halogenated hydrocarbons, aromatics, ketones, nitriles, acetates, acrylates, ethers, and sulfides. See Attachment 2 for a list of compounds and their characteristic ions that have been evaluated on the specified GC/MS system.

4.3 The reporting limits (RLs) for this SOP are shown in Attachment 1 for soils and water. RLs will be proportionately higher for sample extracts and samples that require dilution or reduced sample size to avoid saturation of the detector.

4.4 This method is restricted to use by or under the supervision of analysts experienced in the use of a Gas Chromatograph/Mass Spectrometer (GC/MS) and skilled in the interpretation of mass spectra. Each analyst must demonstrate the ability to generate acceptable results with this method.

5.0 SUMMARY OF TEST METHOD

5.1 Prior to using this method, the samples must be prepared for the GC/MS using the appropriate sample preparation technique (see Section 14.1). Volatile compounds (VOCs) are introduced into a Gas Chromatograph (GC) by the purge-and-trap method or by direct injection. Purge and Trap: An inert gas (Helium) is bubbled through the water at ambient temperature (Method SW-846 5030) and at 40°C for soils (Method SW-846 5035). The volatile components are efficiently transferred from the aqueous phase to the vapor phase. The vapor is swept through an adsorbent column where the volatile components are trapped. After purging is completed, the adsorbent column is heated and back flushed with Helium desorbing the components into a GC column. If the above sample introduction techniques are not applicable, a portion of sample is dispersed in methanol to dissolve the volatile organic constituents. A portion of the methanol solution is combined with water in the purging chamber. It is then analyzed by purge-and-trap GC/MS following the normal soil method.

5.2 This method describes chromatographic conditions that will allow for the separation of the compounds and for their qualitative and quantitative analysis by Gas Chromatography/Mass Spectrometry (GC/MS). Identification of target compounds is accomplished by comparing component retention times to those of authentic standards and by comparing their mass spectra with the electron impact (or electron impact-like) spectra of authentic standards. Quantitation is accomplished by comparing the response of a major (quantitation) ion relative to an internal standard using a five-point calibration curve.

5.3 **Method Modifications from Reference** – This SOP is based on Methods SW-846 8260B, 5030B, and 5035. The 4-Bromofluorobenzene (BFB) mass spectrometer tuning criteria used in this SOP is referenced in the CLP Statement of Work (SOW) for Organic Analyses Revision OLM04.2 May 1999. This is an option in Method SW-846 8260B. Soil samples received in Encore (or equivalent) are prepped according to CLP Statement of Work (SOW) for Organic Analyses Revision OLM04.2 May 1999. Medium level dilutions are prepared from an aliquot of the methanol preserved sample that is transferred into 5 ml of reagent water and analyzed using the soil Archon procedure.

6.0 DEFINITIONS

The STAT Analysis Quality Manual Section 19.0 contains all the definitions of standard terms used in SOPs.

7.0 INTERFERENCES

7.1 GC/MS data from all blanks, samples, and spikes must be evaluated for interferences. Interferences purged or co-extracted with methanol from the samples, will vary from source to source depending upon the particular sample or extract being tested. Determine if the source of interference is laboratory induced. If the source of the interference is laboratory induced, take corrective action to eliminate the problem.

7.2 Contamination by carryover can occur whenever high-concentration and low-concentration samples are sequentially analyzed. Reagent blanks must be analyzed to demonstrate that carryover has been eliminated. Reanalysis must be performed on all affected samples to demonstrate that the compound concentration is from the sample and not due to carryover. The purge-and-trap system may require extensive bake out and cleaning after a high-level sample. Cleaning may include trap replacement, purge gas filter replacement, frit cleaning/replacement and/or transfer line cleaning/replacement.

7.3 Samples can be contaminated by diffusion of volatile organics (particularly methylene chloride, acetone, and fluorocarbons) through the septum seal into the sample during shipment and storage. A refrigerator blank, consisting of preserved reagent water, is stored under the same conditions as the samples. It is analyzed weekly to ensure that samples are not cross-contaminated during the storage process. Clients may specify trip blanks and field blanks for additional contamination checks to monitor for cross contamination during the shipping and sample collection processes.

7.4 The laboratory where volatile analysis is performed must be kept completely free of solvents (except P&T Grade Methanol). Storage of sprays, neat standards, and white out (for capillary column marking only) is forbidden.

7.5 Impurities in the purge gas and from organic compounds out-gassing from the plumbing ahead of the trap account for the majority of contamination problems. The analytical system must be demonstrated to be free of contamination under the conditions of analysis by running calibration and reagent blanks. The use of non-PTFE plastic coating, non-PTFE thread sealants, or flow controllers with rubber components in the purging device should be avoided.

7.6 Laboratory clothing worn by the analyst should be kept only in the VOA laboratory since the clothing exposed to solvents can cross contaminate samples. Lab coats used in other areas the lab, i.e. liquid/liquid extractions, soil extractions, dishwashing and PCM prep, etc., are forbidden.

8.0 SAFETY

Numerous compounds analyzed by this method are known or suspected carcinogens. Proper personal protective equipment including safety glasses, nitrile gloves and a lab coat are required during different parts of this method. Other safety precautions must be conducted in accordance with the Chemical Hygiene Plan. Other actions can also be applied if deemed necessary. A reference file of Material Safety Data Sheets (MSDS) is available to all personnel involved in this method.

9.0 EQUIPMENT AND SUPPLIES

The following apparatus is recommended for performing this procedure. Equivalent items can be used, if with their use, the analytical and QA/QC requirements in this SOP can be met. All catalog numbers in this SOP are current as of the effective date and thereafter subject to change.

9.1 Gas Chromatograph/Mass Spectrometer system (GC/MS)

9.1.1 Gas chromatograph(GC) – Agilent 6890 or 5890/ HP 5890 with electronic flow control gas chromatograph with a split flow injection port used to reduce Helium flow. The column is directly coupled to the source.

9.1.2 Column – 20 m X 0.180 mm ID J&W DB-624 column with 1 µm film thickness.

9.1.3 Mass spectrometer(MS) - Agilent 5971 and 5973

9.1.4 Data system – A computer system using Agilent 3365 Chemstation Software (G1701AA Version C.03.00, G1701BA Version B.00.01, and G1701CA Version C.01.08) is used to collect and process data.

9.1.5 NIST Library of Reference Spectra, Edition NIST98.L

9.2 Purge-and-Trap device: Tekmar Model 3000/3100 (or equivalent) equipped with a 5 mL (or 25 mL) glass frit sampler and an VOC trap, Vocarb 3000.

9.3 Archon Auto Sampler

9.4 Microliter syringes - 10 µL, 25 µL, 100 µL, 250 µL, 500 µL and 1,000 µL. These syringes should be equipped with a 20-gauge needle having a length sufficient to extend into a volumetric flask

9.5 Glass Vials – 40 mL VOA vials with Teflon faced septum and screw cap

9.6 EnCore (or equivalent) samplers for soil samples

9.7 Gas tight glass syringes - 5mL and 10 mL

9.8 Syringe valve: two way, Luer ends

9.9 Volumetric flasks, Class A - 10 mL, 50 mL, 250 mL with ground glass stoppers

9.10 Balance: Analytical, capable of accurately weighing 0.0001g and a top loading balance capable 0.001g

9.11 Spatula - Stainless steel

9.12 Disposable pipettes: Pasteur

9.13 Amber glass vials - 10 mL with Teflon-lined mininert screw caps

9.14 pH strips, wide range

9.15 Magnetic Stirring bars – Teflon coated

9.16 EnCore extrusion tool.

9.17 Adjustable autopipette dispenser – 10 mL

10.0 REAGENTS AND STANDARDS

The following reagents and standards are required to perform this procedure. When instructions are given on how to prepare a specific volume of a reagent or standard, larger or smaller volumes can be prepared as needed so long as the final concentrations remain the same. Any other deviations from the reagents or standards listed in this SOP could be detrimental to the quality of the data produced. Such deviations would have to be approved and documented (see 230 Corrective Action SOP).

Instructions for labeling and record keeping of reagents and standards are contained in SOP 1010 Standard and Reagent Preparation.

10.1 Analytical reagent grade chemicals shall be used in all tests. Unless otherwise indicated, all reagents shall conform to the specifications of the Committee on Analytical Reagents of the American Chemical Society, where such specifications are available.

10.2 Organic-free reagent water - All references to water in this SOP refers to Type II reagent water (in-house system). Note: Reagent water may be de-gassed with High Purity Helium to remove trace impurities.

10.3 Stock Standard solutions - Standard solutions can be prepared from pure standard materials or purchased as certified solutions (e.g. Supelco). The routine laboratory practice is to purchase these standards from approved vendors. The standards used are purchased from: Protocol, Aldrich, Supelco, Restek, and AccuStandard. All purchased standards are stored at manufacturer's recommended conditions. Stock solutions prepared from neat compounds expire six months from preparation date. Working Standard solutions and Working Quality Control (QC) solutions are stored at < -10°C and must be replaced monthly or sooner if comparison with quality control check samples indicates a problem. Quality Control Standards must be from different source (lot numbers) than Calibration Standards.

10.3.1 Primary Stock Standard Solutions – These solutions are made using the individual Stock Standard solutions. Using microliter syringes, the following amounts of each Stock Standard solution are injected into 10 mL volumetric flasks. Each solution is brought to volume with P&T methanol, capped and mixed. The final concentration of each component is listed in Table 1. These are the primary stock standard solutions used to prepare the Working standard solutions in Section 10.3.2. These standards are stored at < -10°C in 10 mL amber vials equipped with Teflon lined mininert screw caps. They are freshly prepared every 6 months, or sooner if check standards indicate a problem. Note: The 50000 µg/mL 2-methylnaphthalene Primary Stock solution is made from pure solution by diluting 0.5000g in a 10.0mL Volumetric Flask with P&T methanol. Once a purchased Stock Standard solution has been opened, it is stored as a Primary Stock Standard Solution.

Table 1 Primary Stock Standard Solutions

Solution ID	Stock Solution	Conc. Stock (µg/ml)	Vol. Stock (µl)	Final Conc. (µg/ml)
VOC-Cyclohexanone	Cyclohexanone	Neat	422	40,000
VOC-2-methylnaphthalene	2-methylnaphthalene	50000	1000	5000

10.3.2 Working Standard Solutions – These solutions are made using the Stock Standard solutions and Primary Stock Standards solutions. Using microliter syringes, the following amounts of each Stock Standard solution are injected into 10 mL volumetric flasks. Each solution is brought to volume with Methanol, capped and mixed. The final concentration of each component is listed in Table 2. These are the Working Standard solutions used to prepare the calibration standards in Section 10.4. These standards are stored at < -10°C in 10 mL amber vials equipped with Teflon lined mininert screw caps. Note: the 1,4-dioxane is stored in an 1ml vial with no dilution. Working Standard Solutions are freshly prepared every month, or sooner if check standards indicate a problem. The Working standard for gases, M-502B-GASES, has been found to be stable for one month when stored at the listed concentration and final volume (Table 2). This solution is replaced if Continuing Calibration Verification (CCV) or Laboratory Control Sample (LCS) outliers exist.

Table 2 Working Standard Solutions

Solution ID	Stock Solution	Vendor/Catalog No.*	Conc. Stock (µg/ml)	Vol. Stock (µl)	Final Conc. (µg/ml)
VOC-MOR	Custom VOA Mix	Restek / 553515	2000 - 40000	1250	250 - 5000
VOC-EH	M-8260-ADD-10X	AccuStandard/ M-8260-ADD-10X	2000	1250	250
	1,3-Butadiene	AccuStandard/ S-406A-10X	2000	1250	250
	2-Ethyltoluene	Aldrich/E4,940-1	2000	1250	5000
Solution ID	Stock Solution	Vendor/Catalog No.*	Conc. Stock (µg/ml)	Vol. Stock (µl)	Final Conc. (µg/ml)
VOC-VCX	M-502A-R-10X	AccuStandard/ M-502A-R-10X	2000	1250	250
VOC-GAS	GASES/M-502B-10X	AccuStandard/ M-502B-10X	2000	1250	250
VOC-F.LIST	2-Nitropropane	Restek/30403-510	2000	1250	250
	Cyclohexanone	Supelco/44-2532	40,000	1250	5000
	Ethyl Acetate	Supelco/4-7947	2000	1250	250
	Ethyl Ether	Supelco/4-7948	2000	1250	250
VOC-1,2-Methylnaphthalene	2-methylnaphthalene	Supelco/44-2359	5000	500	250
	1-methylnaphthalene	Supelco/4-8162	2000	1250	250
1,4-Dioxane	1,4-Dioxane	Supelco/4-8367	2000	No dilution	2000

* or equivalent

10.4 Calibration Standards - A minimum of five calibration standards are prepared. The low standard is the RL and above the MDL. The others define the working range of the GC/MS system. Calibration standards in current use: 5, 20, 50, 100, 200 and 300 µg/L. See Table 3 for Soil and Table 4 for Water standards.

10.4.1 Using microliter syringes, the following amounts of the Working solutions are injected into a volumetric flask. The flask contains water within 1 mL of the mark. After all Working solutions are injected into the water, the solution is brought to volume with water and capped. The flask is gently inverted three times to mix the solution. The contents of the neck portion of the flask are discarded prior to taking an aliquot. The final concentration of each component is listed in Table 3 and Table 4. The solution may be stored in a gas tight syringe or a 40 mL VOA vial (with no headspace in the storage container) at 4°C for up to 24 hours. The continuing calibration verification standards (CCVs) are prepared daily. Levels 2, 3 and 4 (10, 50, and 100 µg/L) are used for the CCVs.

10.4.2 For soil calibration: A 5 mL gas tight syringe is used, the plunger from the syringe is removed. The calibration standard solution from the volumetric flask is gently decanted into the syringe until the syringe is filled to almost overflowing. The plunger is carefully placed into the syringe barrel; no air bubbles are trapped in solution. The solution volume is adjusted to 5 mL. The 5 mL aliquot of each calibration solution is then transferred to an individual 40 mL VOA vial containing a stir bar. The vial is sealed with a screw cap with Teflon faced septum.

Table 3 Soil Calibration Standards

Level	Volume (µL) Secondary Stock	Volumetric Flask (mL)	Final Concentration (µg/L)
1	1.0/1.25*	50	5
2	2.0/2.5*	50	10
3	2.0/2.5*	10	50
4	4.0/5.0*	10	100
5	8.0/10.0*	10	200
6	12.0/15.0*	10	300

* Second Volume is for 1,4-Dioxane only.

10.4.3 For water calibration: The calibration standard solution from the volumetric flask is gently decanted into an individual 40 mL VOA vial until the vial is filled to almost overflowing. The screw cap with Teflon faced septum is carefully placed on the vial; no air bubbles are trapped in solution.

10.4.4 A 200 ppb Gas Only (GASES/M-502B-10X) Calibration Standard may be prepared if bromomethane and/or chloroethane response is suppressed due to an excessive volume of P&T methanol needed to prepare the 200 ppb standard. Methanol will co-elute with bromomethane and/or chloroethane causing their signal to be suppressed if excessive methanol is present.

Table 4 Water Calibration Standards

Level (5mLpurge)	Volume (µL) Secondary Stock	Volumetric Flask (mL)	Final Concentration (µg/L)
1	1.00/1.250*	50	5
2	2.0/25*	50	10
3	10.0/12.5*	50	50
4	20.0/25.0*	50	100
5	40.0/50.0*	50	200
6	60.0/75.0*	50	300
Level (25mL purge)	Volume (µL) Secondary Stock	Volumetric Flask (mL)	Final Concentration (µg/L)
1	0.40/0.50*	500	0.2
2	2.0/2.5	500	1
3	1.00/1.250*	50	5
4	2.0/2.5*	50	10
5	4.0/5.0*	50	20
6	8.0/10.0*	50	40

* Second Volume is for 1,4-Dioxane only.

10.5 Internal Standards/Surrogate Standards Solution: The internal standards used are Chlorobenzene-d_5, Pentafluorobenzene, 1,4-Dichlorobenzene-d_4, and 1,4-Difluorobenzene. The surrogates are Toluene-d_8, 4-Bromofluorobenzene, Dibromofluoromethane, and 1,2-Dichloroethane-d_4. A commercially prepared stock solution, 2000 µg/ml, is purchased from Supelco (Cat. No. 4-8958/4-7778). The Working Standard solution is prepared by injecting 6.25 ml of stock standard into a 50 mL volumetric flask and diluting to mark with Methanol. The concentration of the Spiking solution is 250 µg/mL. This Working Standard solution is added to the standard reservoir of the Archon Autosampler. One microliter (1.0 µL) is added to each sample aliquot that is analyzed by the system. The concentration in the sample is 50 µg/L for all Internal Standard and Surrogate compounds. This solution expires after one month. The internal standards permit most of the compounds of interest in a chromatogram to have retention times of 0.80-1.20 relative to one of the internal standards. Use the base peak ion from the specific internal standard as the primary ion for quantitation (see Attachment 2, i.e. for 1,4-dichlorobenzene-d_4, use 152 m/z for quantitation). If interferences are noted, use the next most intense ion as the quantitation ion.

10.6 GC/MS tuning standard - A standard solution containing 25 µg/mL of BFB in methanol is prepared. Dilute the Protocol 2000 µg/mL BFB standard (125 µL) in a 10.0 ml Volumetric Flask with P&T methanol. Inject 2 µL of this working solution onto the column every 12 hours. This solution will expire after six months. A methanol solution containing 25 ng/µL of 4-Bromofluorobezene (BFB) is used to tune the mass spec. The VOC tuning standard is purchased from Protocol (Cat. No. 5242-S1). Store at < -10°C when not being used. Inject 2 µL of this standard at the start of every 12 hours of operation.

10.7 The Laboratory Control Sample (LCS) is also used as an Initial Calibration Verification Standard (ICV). Spiking solutions are prepared from certified analytical stock standard solutions purchased independently from the Calibration Standards. The LCS stock standards are purchased from Supelco and Restek.

10.7.1 The LCS Spiking Solutions are prepared according to Table 5. These solutions are made using the LCS stock standard solutions. Using a microliter syringe, the following amounts of each solution are injected into a single 10 mL volumetric flask. The solution is brought to volume with Methanol, capped and mixed. The final concentration of each component is listed in Table 5. These are the source solutions used to prepare the LCS for both soil and water samples. These solutions are stored at < -10°C in a 10 mL amber vial equipped with a Teflon lined mininert screw cap. It is freshly prepared every month, or sooner if check standards indicate a problem. Note: The 2000 µg/mL Acrolein Stock solution is made from pure solution by diluting 25µL in a 10.0mL Volumetric Flask with methanol.

Table 5 LCS Spiking Solutions

Solution ID	Stock Solution	Vendor/Catalog No.*	Conc. Stock (µg/ml)	Vol. Stock (µL)	Final Conc. (µg/ml)
LCS-MIX	8260 VC Mix	Supelco/5-00607	2000	250	50
	VOC Mix #6	Supelco/48799-U	2000	250	50
	8240B Mix #2	Supelco/4-7364	2000	250	50
LCS-CM	Acrolein	Supelco/4-8501	2000	250	50
	Custom Mix	Supelco/20283002	2000 - 40000	250	50 - 1000
	Vinyl Acetate	Restek/30216	2000	250	50

* or equivalent

10.7.2 Soil LCS preparation: Using a 10 µL microliter syringe, inject 10 µL of each LCS Spiking Solutions into a 10 ml volumetric flask filled to the mark with water. The flask is capped and is gently inverted three times to mix the solution. The contents of the neck portion of the flask are discarded prior to taking an aliquot. A 5 mL gas tight syringe is used, the plunger from the syringe is removed and the LCS working solution from the volumetric flask is gently decanted into the syringe until the syringe is filled to almost overflowing. The plunger is carefully placed into the syringe barrel; ensure that no air bubbles are trapped in solution. The solution volume is adjusted to 5 mL. The 5 mL aliquot of the LCS solution is then transferred to an individual 40 mL VOA vial containing a stir bar and standard Ottawa sand. The vial is sealed with a screw cap with Teflon faced septum

10.7.3 Water LCS preparation: Using a 100 µL syringe, inject 50 µL of each LCS Spiking Solution into a 50 ml volumetric flask filled to the mark with water. The flask is capped and is gently inverted three times to mix the solution. The contents of the neck portion of the flask are discarded prior to taking an aliquot. The LCS solution from the volumetric flask is gently decanted into an individual 40 mL VOA vial until the vial is filled to almost overflowing. The screw cap with Teflon faced septum is carefully placed on the vial. Ensure that no air bubbles are trapped in the vial.

10.8 Matrix Spike standards - The LCS Spiking solutions are also used for the Matrix Spiking solution. For soil samples, prepare the LCS Spiking solution (50µg/L) as in Section 10.7.3. The LCS solution from the volumetric flask is gently decanted into a 10 mL gas tight syringe with removable needle, and injected into each vial already containing the soil sample. For water samples, transfer the water sample into a 50 ml volumetric flask and follow the procedure in Section 10.7.3

10.9 Methanol - Purge & Trap (P&T) Grade quality. Due to possible cross contamination, store in VOA room only.

10.10 Helium – UHP grade for purge gas and carrier gas.

10.11 Helium –HP grade for optional reagent water degassing .

10.12 Ottawa Sand.

11.0 SAMPLE COLLECTION, PRESERVATION, AND HANDLING

11.1 Containers used to collect samples for the determination of volatile organic compounds: For water samples, use 40 mL VOA glass vials equipped with Teflon faced septum and screw cap, no headspace and preserved with concentrated HCl to pH <2. Water samples containing residual chlorine should be field treated to remove the chlorine prior to collection. Soil samples may be collected in either a 40 mL VOA vial, a 40 mL VOA vial preserved with sodium bisulfate, a 40 mL VOA vial with 5.0 ml methanol, or EnCore (or equivalent) samplers. Plastic containers or lids must NOT be used for the storage of samples due to the possibility of sample loss. A separate 4 oz jar should be supplied for percent moisture determination for soil and sediment analysis. Soils analyzed from a glass jar will NOT be reported by Method 5035 .

11.2 Water samples, soil samples preserved with sodium bisulfate, and soil samples preserved with 5.0 ml methanol must be stored under refrigeration at between 0.1°C and 6.0°C. Analysis must be within 14 days from sampling date for water preserved with HCl (7 days for unpreserved water samples) and 14 days for soils. Soil samples collected in 40 mL VOA vials or EnCore (or equivalent) samplers that are transferred to a close-system 40 mL VOA vial, that may contain reagent water; must be frozen within 48 hours of collection are held at $<-10^0$C until analysis.

11.3 All samples are stored away from all standards, reagents, food, and other potentially contaminating sources in order to prevent cross contamination.

12.0 QUALITY CONTROL

The following details the QC requirements that apply to this analysis. Each Quality Control Indicator (QCI) provides information pertaining to either method or individual sample performance. Our goal is to produce defensible data of known and documented quality. The results of these Quality Control Indicator (QCI) samples are used to assess the acceptability of data.

12.1 Calibration Verification

An Initial Calibration Verification (ICV) standard containing all of the target compounds reported in this method (refer to section 10.7) shall be analyzed immediately after the completion of the initial calibration. The ICV shall be purchased from a second source to verify compound concentrations.

12.2 Blanks

Method Blank analysis is performed to determine if any contamination is present in the analytical process and is used to evaluate acceptance of the batch of samples. A method blank shall be prepared once per preparation batch of 20 or less samples per matrix type. If more than 20 samples are prepared a second blank shall be prepared after the twentieth sample. The method blank shall be processed through all preparatory steps used for the samples, including cleanup procedures. The blank shall be analyzed using the same instrument and conditions as the samples.

12.3 Laboratory Control Sample (LCS)

The LCS is used to evaluate the performance of the total analytical system, including all preparation and analysis steps. The LCS shall be prepared once per preparation batch of 20 or less samples per matrix type. If more than 20 samples are prepared a second LCS shall be prepared after the twentieth sample. The LCS shall be processed through all preparatory steps used for the samples, including cleanup procedures. The LCS shall be analyzed using the same instrument and conditions as the samples. Refer to section 10.7 for LCS compounds and concentrations.

12.4 Surrogates

The surrogates used for this method are added to all samples, standards, and blanks. Refer to section 10.5 for preparation and concentration instructions.

12.5 Duplicates

Duplicates of field samples or of the LCS must be prepared in compliance with the method requirements and client directives. Duplicate LCSs are prepared for cases in which there is insufficient sample to perform a matrix spike and matrix spike duplicate. Reproducibility performance would be the same as for a matrix spike/matrix spike duplicate.

12.6 Matrix Spike and Matrix Spike Duplicate (MS/MSD)

MS/MSDs indicate the effect of the sample matrix on the precision and accuracy of the results generated using the selected method. This information does not determine the validity of the entire batch. MS/MSDs must be analyzed at a minimum of 1 per 20 samples per matrix per preparation procedure, or as specified by the required test method. If an MS/MSD pair is not analyzed in the preparation batch, an LCS/LCSD pair is analyzed. Samples chosen for matrix spiking are rotated among different clients and/or different client projects. This is accomplished through communication between the Department Manager and the analyst. In addition, designated samples, as indicated by client request or contract requirement, are matrix spiked. The MS/MSD pair shall be processed through all preparatory steps used for the samples. They shall be analyzed using the same instrument and conditions as the samples. The LCS solutions in Section 10.7 are used for matrix spiking (see also Section 10.8). Some clients may require different spiking levels and/or target compounds, these specific needs are documented on the request for analysis forms.

12.7 Internal Standards

The internal standards used for this method are added to all samples, standards, and blanks. Refer to section 10.5 for preparation and concentration instructions.

13.0 CALIBRATION AND STANDARDIZATION

13.1 Mass Spectrometer Tuning Verification

Mass Spec is software-tuned with the BFB tuning macro using PFTBA. Each GC/MS system must be hardware-tuned to meet the criteria in Table 6 for a 50 ng injection of BFB. Analyses must not begin until all these criteria are met. Using a 10 µL syringe, inject 2 µL of BFB tuning standard solution directly on to the column. Analyze the solution using the following BFB method conditions:

BFB method operating conditions	
EMV	1300-2500
Mass Range	35-300
Scan Sampling Rate	2^2
Initial Column Temp.	70°C
Initial Temp Holding Time	2 minutes
Ramp 1 Temp Program	20°C/minute
Ramp 1 Final Column Temp.	230°C
Ramp 1 Holding Time	3 minutes
Injector Temp.	220°C
Source Temp.	250°C
Transfer Line Temp.	250°C
Split Ratio	50:1
Carrier Gas	UHP Helium

Background subtraction must be straightforward and designed only to eliminate column bleed or instrument background ions. Obtain a mass spectral analysis, using the method listed above, of BFB and confirm that all the key m/z criteria in Table 6 are achieved. The mass spectra of BFB are acquired using the following methods: three scans (the peak apex scan and the scans immediately preceding and following the apex) are acquired and averaged, the peak apex only is evaluated, or the entire BFB peak is averaged. If background subtraction is required, this must accomplished using a single scan no more than 20 scans prior to the elution of BFB. Do not background subtract part of the BFB peak. Note: the instrument-tuning file used to acquire the BFB criteria must be also used to acquire QC and sample data. If the criteria are not passed, the analyst must perform needed maintenance, retune the mass spectrometer and repeat the test until all criteria are achieved.

Note: the 12-hour tune period begins at the start of the BFB analysis, which is recorded as the data acquisition start time on the data file. The last valid calibration standard in the ICAL must have a data acquisition start time less than 12 hours from the start of the tune period.

Table 6 Acceptance Criteria for BFB

Target Mass	Relative to Mass	Lower Limit%	Upper Limit%
50	95	8	40
75	95	30	66
95	95	100	100
96	95	5	9
173	174	0	< 2
174	95	50	120
175	174	4	9
176	174	93	101
177	176	5	9

13.2 **Initial Calibration (ICAL)**

13.2.1 Analyze each calibration standard according to the procedure listed in Section 14 (standards are analyzed under the same conditions as samples) and tabulate the target ion area of the compound against concentration for each compound relative to the appropriate relative internal standard. See Attachment 5 for the list of internal standard assigned to each compound. Calculate response factors (RFs) for each compound in each calibration standard as follows:

$$RF = \frac{A_x * C_{is}}{A_{is} * C_x}$$

where:

A_x = Area of the characteristic ion for the compound being measured.
A_{is} = Area of the characteristic ion for the specific internal standard.
C_{is} = Concentration of the specific internal standard (50 µg/L for this method)
C_x = Concentration of the compound being measured (µg/L).

13.2.2 Calculate the average response factor ($\overline{RF}$) for each compound as follows:

$$\overline{RF} = (\Sigma RF_1 \text{ to } RF_n)/n$$

where:

RF = RF for each of the calibration levels (i.e., 5)
n = Number of RF values (i.e., 5)

13.2.3 A system performance check must be performed to ensure that minimum average RFs are met before the calibration curve is used. If it is determined that one calibration level has an unacceptable response, that level may be reanalyzed once. If the minimum average RF is still not met, corrective action must be taken and the calibration sequence repeated. If any major changes are made to the system (e.g. column changed or detector cleaned), recalibration of the system must take place. For Volatiles, the System Performance Check Compounds (SPCCs) and the the minimum average RFs are as follows:

Chloromethane	0.100
1,1-Dichloroethane	0.100
Bromoform	0.100
Chlorobenzene	0.300
1,1,2,2-Tetrachloroethane	0.300

13.2.4 Calibration Check Compound (CCC) responses are monitored to check the integrity of the system. The CCCs are as follows:

Vinyl chloride	1,2-Dichloropropane
1,1-Dichloroethene	Toluene
Chloroform	Ethylbenzene

Using the RFs from the initial calibration, calculate the percent relative standard deviation (%RSD) for the Calibration Check Compounds (CCC).

To calculate %RSD: $\%RSD = 100\% \times SD/\overline{RF}$

where:

%RSD = % Relative Standard Deviation

$\overline{RF}$ = average of initial RFs for a compound
SD = standard deviation (n-1) of average RFs for a compound

To calculate Standard Deviation (n-1 degrees of freedom)

$$SD = \sqrt{\sum_{i=1}^{N} \frac{(RF_i - \overline{RF})^2}{N-1}}$$

where: RF_i = RF for each of the 5 calibration levels
N = Number of RF values (i.e., 5)

13.2.5 If the %RSD of any CCC compound is > 30%, then the chromatographic system is too reactive for analysis to begin. Check stability of the trap, replace if necessary. Perform the initial calibration procedure beginning with section 13.2.1.

13.2.6 Linearity : If the %RSD of any compound is 15% or less, then the relative response factor is assumed to be constant over the calibration range, and the average relative response factor is used for quantitation. If the %RSD is greater than 15%, first order linear regression is used. The calibration curve must meet the requirements for curve fitting listed in SW-846 8000B and the correlation coefficient is ≥ 0.99. The equation is not forced through the origin.

13.2.7 Retention Times: The Relative Retention Times (RRT) of each compound in each calibration standard should be within ± 0.06 RT units.

13.2.8 Before sample analysis can begin, a Initial Calibration Verification (ICV) (see Sec. 10.7) must be performed. The ICV results must be within the acceptance criteria as established for the CCV compounds (Section 13.3). Other components should be be recovered within 85 to 115% of the true value.

13.2.9

1. All calibration curves must have a unique identifier. The calibration date is incorporated into the method identifier for easy reference.
2. All initial calibration standards must be analyzed within the 12-hour BFB tune verification window.
3. Calibration must be completed (all standard levels analyzed) within 36 hours or the entire calibration sequence must be repeated. If the calibration was not completed in the first tune window it may continue into a second tune window. Standard calibration levels from either tune window can be used. An exception follows: If BFB criteria does not pass criteria for the second tune window and major maintenance was done to the instrument or the Mass Spec tuning parameters were adjusted in order to obtain an acceptable tune for BFB, the entire calibration sequence must be repeated.
4. All initial calibration standards must be analyzed and verified prior to field sample analyses.
5. Do not add calibration standards and update the curve after the original calibration date.
6. Multiple analyses of the same calibration level are not allowed to be included in the calibration curve.
7. Compound responses cannot be selected from different analyses of the same calibration level (i.e. all compound responses for level 1 must come from the same data file), except for bromomethane and/or chloroethane, see Section 10.4.4.
8. If more than five calibration levels are analyzed, it is permissible to either drop the low compound concentration (poor response) or the high compound concentration (detector saturation). Do not drop a point in the middle of the curve.
9. If more than five calibration levels are analyzed, it is permissible to drop an entire level if the analyst can document a specific reason or reasons why that level should be excluded. Mechanical failures, significant loss of all compound responses possibly due to poor technique in standard preparation, or software malfunction during data acquisition (system did not acquire all compound data) are plausible reasons. The reason must be justified and documented. The supervisor should review this situation and approve the analyst's decision.
10. The need to analyze more than two analyses of the same calibration level indicates a potential problem with the Working Standard solution. Prepare a fresh Working Standard solution and repeat all five-calibration levels. All calibration standard levels must come from the same Working Standard solution.
11. Manual integration must only be used if the software fails to properly integrate the peak (See SOP 1255 Manual Integration). If manual integration is used for a particular compound, all levels of that compound do not have to be manually integrated. Example: the computer generated integration of a compound in the low level standard is not technically sound. A manual integration of the compound is performed (due to baseline noise, etc) in order to achieve a technically sound integration. Other levels of the compound are integrated correctly by the computer. The manual integration of the low level must match, as best as possible, the computer generated integrations for all other levels.
12. If any compound in the mid-point level is manually integrated, the integration of this compound must be reviewed for every continuing calibration standard and QC check solution (i.e. LCS, and Matrix Spike) to ensure that the integration is the same as the manual integration performed in the initial calibration (ICAL) mid-point. A consistent manner of integration must be achieved.
13. All manual integrations must be reviewed and approved according to SOP 1255 Manual Integration.

13.3 Continuing Calibration Verification (CCV)

13.3.1 The mass spec must pass tune criteria (see Section 13.1) every 12 hours during analysis of samples.

13.3.2 A continuing calibration verification (CCV) sample is analyzed every 12 hours during analysis of samples. Different standards are analyzed for the CCV such that a wider range of the calibration curve is verified. For example: on successive days analyze the 50 µg/L and the next day the 100 µg/L standard solution. Compare the response factors, of the SPCCs and the CCCs, and the internal standards from the CCV with the following criteria.

13.3.3 The SPCC compounds must meet the minimum criteria as stated in Section 13.2.3.

13.3.4 Control limits for the CCC compounds are ± 20% difference from the ICAL Response Factor (RF) if the average RF is used for quantitation, or ± 20% drift from the true concentration of the CCV compound if linear regression is used.

13.3.5 The areas of the internal standards in the CCV must be between –50% and +100% of the respective areas of the internal standards in the ICAL mid-point calibration standard.

13.3.6 The retention times of the internal standards in the CCV must be within ± 30 seconds of the respective retention times of the internal standards in the ICAL mid-point calibration standard.

13.3.7 If the CCV results obtained are outside the acceptance criteria, corrective actions must be performed. If routine corrective actions fail to produce an acceptable *second consecutive (immediate)* CCV, then either the lab has to demonstrate performance after corrective action with two consecutive successful CCVs, or a new ICAL must be performed. If the instrument has not demonstrated acceptable performance, sample analyses cannot continue until a new ICAL is established and verified with an ICV. However, sample data associated with an unacceptable CCV may be reported as qualified data under the following special conditions:

13.3.7.1 When the acceptance criteria for CCV are exceeded high, i.e., high bias, and there are associated samples that are non-detects, then those non-detects may be reported. Otherwise the samples affected by the unacceptable calibration verification must be reanalyzed after a new ICAL has been established, evaluated and accepted.

13.3.7.2 When the acceptance criteria for the CCV are exceeded low, i.e., low bias, those sample results may be reported if they exceed a maximum regulatory limit/decision level. Otherwise the samples affected by the unacceptable verification must be reanalyzed after a new ICAL is established and verified with an ICV.

13.3.7.3 When the acceptance criteria for the CCV are exceeded and it is not possible to reanalyze the sample due to limited sample quantity AND a new sample cannot be obtained by the laboratory, the data may be reported with the appropriate data qualifiers if the client has been contacted and agrees, in writing, to accept the qualified data.

13.4 Records: Initial and Continuing Calibration Records will contain, at a minimum, the following:

1) Calibration date
2) Test method
3) Instrument
4) Analysis date
5) Each compound name
6) Analyst's initials or signature
7) Standard Concentration (appropriate units) and number of standards
8) Response (appropriate units)
9) Calibration curve or response factor
10) Evaluation of and Statistics for ICAL curve fit in order to judge calibration curve acceptance
11) Evaluation of and Acceptance Limits for ICV analysis in order to judge calibration curve acceptance
12) Evaluation of and Acceptance Limits for CCV analysis in order to judge continuing calibration acceptance

13.5 Thermometers - The thermometers in the sample refrigerators and the standards freezer must be checked daily. They must meet performance criteria. Check the thermometer to ensure the calibration is not expired (see SOP 1040 General Laboratory Practices).

13.6 Balances - Be sure the balance is checked prior to use and performance criteria are met (see SOP 1040 General Laboratory Practices).

14. PROCEDURE

14.1 Sample Preparation

14.1.1 Samples are removed from the refrigerator and placed in the Archon autosampler. The samples are allowed to warm to ambient temperature prior to analysis. All standards, method blanks, and QC solutions (made from the same reagent water) are prepared in 40 mL VOA vials and put in the Archon.

14.1.2 Samples are prepared for analysis by using a Purge and Trap. If the trap is new, condition it by purging it with Helium at 40ml/min for 30 minutes at room temperature followed by a bake at 270°C in the bake mode with Helium flow of 40 mL/min.

14.1.3 Purge and Trap Conditions

Purge and Trap operating conditions	
Purge Ready Temp	30°C
Sample Size	5 mL
Purge Time	11 minutes
Purge Flow	40 mL/min
Dry Purge Time	5 minutes
Pre-heat Temp	245°C
Desorb Temp	250°C
Desorb Time	2 minutes
Bake Temp	260°C
Bake Time	7 minutes
Transfer Line Temp.	250°C
Purge Gas	UHP Helium

14.1.4 Check the Internal Standards/Surrogate Solution reservoir to ensure that enough solution is present. One (1) microliter of this solution is added automatically to the 5 mL (or 25mL) water sample aliquot as it transfers to the 5 ml (or 25 ml) purging vessel. Soils samples are treated similarly except they are purged directly in the 40 ml VOA vial without opening. Five (5) ml of reagent water is added to transfer the one (1) microliter of internal standard/surrogate solution to the sample vial.

14.2 GC/MS Analysis

14.2.1 GC/MS Conditions:

GC/MS operating conditions	
EMV	1300-2500
Mass Range	35-300
Scan Sampling Rate	2^2
Initial Column Temp.	40°C
Initial Temp Holding Time	4 minutes
Ramp 1 Temp Program	10°C/minute
Ramp 1 Final Column Temp.	230°C
Ramp 1 Holding Time	5 minutes
Injector Temp.	220°C
Source Temp.	250°C
Transfer Line Temp.	250°C
Split Ratio	50:1
Carrier Gas	UHP Helium

14.2.2 Access the computer and create a batch sequence file by following Section 14.3.

14.2.3 Using a 10µL syringe, inject 2 µL of BFB tuning standard solution directly on to the column (50 ng on column). Analyze using the BFB method. Evaluate using the tune acceptance criteria (See Section 13.1).

14.2.4 Analyze the Continuing Calibration Verification Standard (CCV) and evaluate using CCV acceptance criteria (See Section 13.3).

14.2.5 Analyze the Method Blank The method blank must contain less than the reporting level for all target compounds. If target parameters achieve these limits, recovery and retention times of the surrogate compounds are within acceptance limits, and the chromatography (baseline noise and compound tailing) is acceptable, continue the analysis. If any one of these criteria is not met, take appropriate corrective action to identify and correct the problem.

14.2.6 Analyze the Laboratory Control Sample (in duplicate if a Matrix Spike/Matrix Spike Duplicate is not analyzed). Recovery (and RPD) must meet criteria specified in section 18.2.

14.2.7 If all criteria are met, continue with sample analysis as outlined below.

14.2.8 Water samples – a 5 mL (or 25mL) water sample aliquot is transferred to the 5 ml (or 25ml) purging vessel. One (1) microliter of Internal Standards/Surrogate Solution is added automatically to the 5 mL (or 25ml) water sample aliquot as it transfers to the 5 ml (or 25ml) purging vessel.

14.2.9 Soil samples: - VOA soil samples are prepared for analysis in the field with pre-preserved and pre-weighed 40 ml VOA Vial (5035 Kit). These vials are post-weighed and the sample amount is determined by the difference between post-weight and pre-weight. The weight is recorded in the VOA Soil Sample Prep Logbook and in the Prep Batch in LIMS (sees SOP 1400 LIMS). Each VOC sub-sample is assigned its

own unique Prep Batch. Three (3) EnCore samples (or equivalent) are usually collected for each sampling point and are placed in a tared 40 ml Vial with stir bar. The entire EnCore (or equivalent) soil sample is placed in the 40 ml VOA vial with the use of the extrusion tool (in cases where the sample collector has provided one 5 gm EnCore and one 25 gm Encore, the initial analysis is performed using the 5 gm EnCore and re-analysis and/or dilutions are performed using the 25 gm EnCore). The vial is weighed and recorded in the VOA Soil Sample Prep Logbook and the Prep Batch in LIMS (see SOP 1400 LIMS). Soil samples received in jars are also prepared into tared 40 ml VOA vials in a similar manner with care taken to minimize exposure of the sample to the environment (these samples are always reported without mention of Method 5035). The type of VOC collection device is recorded with the sample weights (5035 Kit, EnCore, or Jars). The sample of known weight is placed in the Archon autosampler and five (5) ml of reagent water is added to transfer the one (1) microliter of internal standard/surrogate solution to the sample vial. Medium level analysis is performed upon samples preserved in 5 ml or 10 ml (P&T) methanol. The volume of P&T methanol is noted. Aliquots of methanol are removed as appropriate; a 100 µL aliquot of methanol extract is the largest aliquot that can be analyzed as methanol may affect the system chemistry.

14.2.10 If the response for any quantitation ion exceeds the initial calibration curve range of the GC/MS system, sample dilution and reanalysis is an option. If sample dilution is required for water samples, the sample is diluted using the following procedure: A 50 mL volumetric flask is filled with reagent water close to the mark. A 5 mL syringe is filled with sample from a second (intact) 40 mL VOA vial. An appropriate amount of sample (minimum 1 mL) is injected into the flask, the solution is brought to volume with water and capped. The flask is gently inverted three times to mix the diluted sample. The contents of the neck portion of the flask are discarded prior to taking an aliquot. The diluted solution from the volumetric flask is gently decanted into an individual 40 mL VOA vial until the vial is filled to almost overflowing. The screw cap with Teflon faced septum is carefully placed on the vial; no air bubbles are trapped in solution. The VOA vial is placed in the Archon for analysis. If sample dilution is required for soil samples, the sample is diluted using the following procedure: Using microliter syringes, an appropriate amount of methanol extract (minimum 5.0 uL) is removed from sample preserved with methanol, and is injected into a 40ml VOA vial containing a stir bar and 5ml of reagent water. The VOA vial is placed in the Archon autosampler for analysis. Note: Some soil samples will be reported with an "E" (exceeded the calibration range on the undiluted analysis and reported with a "J" value on the diluted analysis. The "E" value is reported and a Quality Control Exception Report is generated and delivered to the project manager.

14.2.11 Perform all qualitative and quantitative measurements as described in Sections 14.4 and 14.5. After water (5030) analysis, check the sample pH using the pH strips and record the result. Used vials are kept for 14 days in VOC room and then disposed according to SOP 1330 Waste Disposal.

14.3 Analytical Sequence

START CHEMSTATION SOFTWARE:

From NT Desktop: Start/Programs/MSD ChemStation/Instrument #1/Instrument #1

The software will locate the instrument and all peripheral equipment. Once the software is fully loaded there will be two windows visible. Window one is the instrument control window. Instrument parameters are readily viewed from this window. The second window is the sequence control window. No instrument parameters are viewable from this window.

SEQUENCE SETUP

From menu: Sequence/Load

1. Load the method you want to use for analysis (soil/water)
2. OK (to save changes)

From menu: Sequence/Run

3. Set current date in Data File Directory space (ie., C:\MSDCHEM\1\DATA\060702\)
4. OK (to save changes)

From menu: Sequence/Edit Sample Log Table

1. Set data file name using current date using the following format MMDDYY## (ie., 06070201)
2. Set up sequence order using the following format: (**NOTE:** Tune and CCV must always run first)

LINE	TYPE	VIAL	DATA FILE	METHOD	SAMPLE NAME-INSTRUMENT
1	Sample	100	11240201	BFBS	TUNE VBFB112402-1
2	Sample	1	11240202	S1121002	CCV VSTD050
3	Sample	2	11240203	S1121002	MBLK VBLK112402-1
4	Sample	3	11240204	S1121002	LCS VLCS112402-1
5	Sample	4	11240205	S1121002	SAMP ##########
6	Sample	5	11240206	S1121002	SAMP ##########
7	Sample	6	11240207	S1121002	SAMP ##########

NOTE: The number of samples, including tune and CCV that can be analyzed within the 12 hour window varies with each analysis. Use this list as a guide but always check that the samples were analyzed within 12 hours of the BFB injection.

3. OK (to save changes)

From menu: Method/Set New Default Paths

1. Update the method and data file paths using the current date (ie., C:\MSDCHEM\1\DATA\060702\)
2. OK (to save changes)

Using Windows Explorer copy all of the method files from the previous day's folder into the current day's folder. Note: After each ICAL, the water/soil method is saved using the following format: matrixinstrumentMMDDYYof last ICAL (ie., S1121002).

TO START SEQUENCE:

From menu: Sequence/Run/Run Sequence

Start of the 12 hour sequence (as documented as the date/time stamp on the data file for the Tune Standard):

The analytical sequence for Initial Calibration is:

BFB (Tune Standard)
Calibration standard (S1)
Calibration standard (S2)
Calibration standard (S3)
Calibration standard (S4)
Calibration standard (S5)
Calibration standard (S6) optiona
Calibration standard (S7) optiona
Initial Calibration Verification Standard (ICV)
Method Blank (MBLK)

The analytical sequence for Sample Analysis is:

BFB
Continuing Calibration Verification Standard (CCV)
Method Blank (MBLK)
LCS
(LCS Duplicate optional)
Sample #1
Sample #1 Matrix Spike (MS)
Sample #1 Matrix Spike Duplicate (MSD)
Sample #1 Laboratory Duplicate (optional)
Samples #2, #3, etc. until the end of 12 hour tune period

14.4 Data Interpretation - Qualitative Analysis

14.4.1 An compound is identified based upon Relative Retention Time (RRT) and by comparison of the sample mass ions with the mass ions of a standard of the suspected compound (standard reference ions). The reference mass ion ratio must be generated by the laboratory using the conditions of this method. The characteristic ions from the reference mass ion are defined to be the two or three ions of greatest relative intensity. See Attachment 2 for the ions to be monitored. Two criteria must be satisfied to verify identification: (1) elution of sample component at the same GC relative retention time (RRT) as those of the standard component; and (2) correspondence of the sample component and the standard component mass ions. Intensities of the characteristic ions must maximize in the same scan or within one scan of each other.

14.4.2 The RRT of the sample component is within ± 0.06 RRT units of the RRT of the standard component.

14.4.3 The relative intensities of the characteristic ions must agree within 20% of the relative intensities of these ions in the reference spectrum. (example: For an ion abundance of 50% in the reference, the corresponding abundance in a sample spectrum can range between 30% and 70%.)

14.4.4 Structural isomers that produce very similar mass spectra must be identified as individual isomers if they have sufficiently different GC retention times. Sufficient GC resolution is achieved if the height of the valley between two isomer peaks is less than 25% of the sum of the two peak heights. Otherwise, structural isomers are identified as isomeric pairs. The Manual Integration SOP 1255 is used for guidance in the integration of these two peaks and for other situations that may require analyst efforts to correct computer generated integrations that are not technically sound.

14.4.5 Identification is hampered when sample components are not resolved chromatographically or co-elute and produce mass spectra containing ions contributed by more than one compound. When gas chromatographic peaks obviously represent more than one sample component (i.e., a broadened peak with shoulder(s) or a valley between two or more maxima), appropriate selection of compound spectra and background spectra is important. Examination of extracted ion current profiles of appropriate ions can aid in the selection of spectra, and in qualitative identification of compounds, but each compound spectrum will contain extraneous ions contributed by the coeluting compound.

14.4.6 For samples containing components not associated with the calibration standards, a library search may be made for the purpose of tentative identification. The necessity to perform this type of identification will be determined by the purpose of the analyses being conducted. Computer generated library search routines must not use normalization routines that would misrepresent the library or unknown spectra when compared to each other. Only after visual comparison of sample spectra with the nearest library searches will the mass spectral interpretation specialist assign a tentative identification. Guidelines for making tentative identification are:

14.4.6.1 Relative intensities of major ions in the reference spectrum (ions >10% of the most abundant ion) must be present in the sample spectrum.

14.4.6.2 The relative intensities of the major ions must agree within ± 20%. (Example: For an ion with an abundance of 50% in the standard spectrum, the corresponding sample ion abundance must be between 30 and 70%).

14.4.6.3 Molecular ions present in the reference spectrum must be present in the sample spectrum.

14.4.6.4 Ions present in the sample spectrum but not in the reference spectrum must be reviewed for possible background contamination or presence of coeluting compounds.

14.4.6.5 Ions present in the reference spectrum but not in the sample spectrum must be reviewed for possible subtraction from the sample spectrum because of background contamination or coeluting peaks. Data system library reduction programs can sometimes create these discrepancies.

14.5 Data Interpretation - Quantitative Analysis

14.5.1 Once a compound has been identified, the quantitation of that compound must be based on the integrated abundance from the EICP of the primary characteristic ion. The internal standard used shall be the one nearest the retention time of that of a given compound.

14.5.2 If the RSD of a compound's response factors is 15% or less, then the concentration in the sample is determined using the average response factor (RF) from initial calibration data (13.2). See Method 8000, Sec. 7.0, for the equations describing internal standard calibration and either linear or non-linear calibrations.

14.5.3 Where applicable or required, the concentration of any non-target compounds (TICs) identified in the sample are estimated. The same formulae must be used with the following modifications: The areas A_x and A_{is} must be from the total ion chromatograms, and the RF for the compound must be assumed to be 1. The resulting concentration must be reported indicating: (1) that the value is an estimate, and (2) which internal standard was used to determine concentration. Use the nearest internal standard free of interferences.

14.6 Record the following information in the appropriate logbook or data file. Include any deviations from this procedure. Analyst initials, date of analysis, sample number or ID, initial sample volume or weight processed, calibration standard sample or solution identifier, QC sample or solution identifier, surrogate solution identifier, internal standard solution identifier, any dilution information, readings from support equipment, data file name, instrument method name, visual observations, and any other information as deemed necessary.

14.7 Troubleshooting - The experience of the analyst performing GC/MS analyses is invaluable to the success of the methods. Each day that the analysis is performed, the daily calibration standard (CCV) must be evaluated to determine if the chromatographic system is operating properly. Questions that must be asked: Do the peaks look normal? Is the response obtained comparable to the response from previous calibrations? Careful examination of the standard chromatogram can indicate whether the column is still good, the injector is leaking, the injector septum needs replacing, etc. If any major changes are made to the system (e.g. column changed or detector cleaned), recalibration of the system must take place.

14.8 Routine Maintenance - Record all maintenance, including the problem encountered, steps taken to correct the problem, and verification that the problem has been corrected (i.e. tune passed).

14.8.1 Change the septum and or the injection port liner as needed according to sample throughput. Trim a short section from the analytical column as necessary.

14.8.2 Clean the source on an as needed basis (loss of sensitivity).

14.8.3 Inspect the Archon autosampler, perform routine maintenance as necessary. Refill the standard reservoir of the autosampler with Internal Standards/Surrogate solution as needed according to sample throughput. Check Helium purge flow, clean the vial gripper, clean soil purge needle, and recalibrate as necessary.

14.8.4 Check the carrier gas supply; replace as necessary, record carrier gas change in the maintenance log book.

15. DATA REDUCTIONS, CALCULATIONS, AND LOADING

15.1 The data system performs the calculations.

15.1.1 If the %RSD of a compound's relative response factor is 15% or less, then the concentration in the sample may be determined using the average response factor (RF) from the initial calibration data (13.2) and the following equation. The equation is based upon all sample sizes equivalent to either 5 ml or 5 gram.

$$\text{Concentration } (\mu g/L \text{ or } \mu g/Kg) = \frac{A_x * C_{is} * D}{A_{is} * RF}$$

where:

A_x = Area of the characteristic ion for the compound being measured
C_{is} = Concentration of the specific internal standard (50 µg/L for this method)
A_{is}= Area of the characteristic ion for the specific internal standard
RF= average response factor for compound being measured
D = Dilution factor if dilutions are made

If another sample weight is analyzed, adjust the concentration using the factor: 5g / initial weight g

15.1.2 Alternatively, linear regression (Sec. 13.2) is used for determination of the sample concentration.

15.2 If appropriate, recalculate the concentration of the compound in the sample using the equations in Secs. 15.2.1, 15.2.2, and 15.2.3.

15.2.1 The concentration of the compound in the sample is reported as µg/L or µg/Kg. If conversion to mg/L or mg/Kg is required, calculate as follows:

$$\text{Concentration (mg/L or mg/Kg)} = \frac{\text{Conc (µg/L or µg/Kg)} * D}{1000}$$

15.2.2 For soil samples reported on dry weight basis, divide the concentration by the decimal equivalent of the Percent Solids. For example: a sample contains 90% solids, thus

$$\text{Concentration (µg/Kg or mg/Kg) dry weight} = \frac{\text{Conc (µg/Kg or mg/Kg)}}{0.90}$$

15.2.3 If an aliquot of a methanol extract was analyzed, calculate as follows:

$$\text{Concentration in sample (mg/Kg)} = \frac{\text{Conc } (\mu g/L \text{ readout}) * 5 * V_{ex}}{W_i * V_a}$$

V_a = amount of methanol extract analyzed in μL
V_{ex} = total extract volume of methanol in mL
W_i = initial sample weight in g

15.3 The procedure for uploading data into the LIMS system is detailed in SOP 1400 LIMS.

16. METHOD PERFORMANCE

16.1 Demonstration of Capability (DOC)

All parameters of interest must meet the method acceptance criteria before actual sample analysis begins. See SOP 1230 Training for the procedure to perform and document the DOC. The DOCs for the analysts performing this method are located in the analysts' training form folders located in the QA office files.

A quality control (QC) reference concentrate in methanol is required containing each compound at a concentration of 10 µg/L to 200 µg/L. The QC reference sample used is the LCS solution (see Section 10.7). The QC reference sample is made using stock standards prepared independently from those used for calibration. This analysis is performed in quadruplicate. For each analyte calculate the mean recovery (X), standard deviation (s) and average % Recovery (%R). Water and soil recovery must be between 70 to 130%.

Continuing Demonstration of Capability will be documented with the use of PT sample results and four consecutive Laboratory Control Samples (LCS). This must be documented annually.

16.2 Comparison to Reference Method Data

EPA Method 8000B provides guidance for the establishment of control limits for the LCS and MS QC samples. Recovery limits of 70% to 130% are provided as initial benchmarks for performance (8000B Section 8.5.4). These limits are designed for a wide variety of organic test methods. Individual compound performance may vary.

16.3 In-House Control Limits

Method performance data is on file in the laboratory QC department. Comparison of method performance data for the laboratory to the reference method criteria occurs when laboratory in-house acceptance limits are generated. In-house generated data is compared to the specifications of the reference method. If the in-house limits are within the specifications of the reference method, the control limits are updated in LIMS. If the in-house limits are not within specifications, an investigation is performed to determine the cause(s) of the problem and a corrective action is completed. The analysis may continue until enough data points are collected to regenerate new control limits. Any QC data generated outside of reference method limits during that time frame is flagged.

The laboratory maintains performance records to document the quality of data that is generated. Method accuracy for samples is assessed and records maintained. After the analysis of at least 20 laboratory control samples and surrogates, calculate the average percent recovery (R) and the standard deviation of the percent recovery (S).

Control limits for method parameters are generated by the QC staff generates the method parameters and distributed to the analysts via updates to the LIMS control charts. The control limits are calculated based on in-house performance data. At a minimum, these limits are reviewed annually.

17. POLLUTION PREVENTION

The preparation of excessive volumes of laboratory reagents and standards shall be avoided so that waste and potential for pollution are minimized. Samples, reagents and standards shall be disposed in compliance with the lab waste disposal program, SOP 1130. With the consent of the client, the samples may be returned to their origin for treatment.

Uncontaminated paper waste, glass and cans should be separated for recycling. Laboratory staff are required to protect the laboratory's and our clients' business information when disposing of recycled paper or waste from the facility.

18. DATA ASSESSMENT AND CRITERIA FOR QUALITY CONTROL MEASURES

Data assessment includes review of: proper sample condition, preservation, and storage; analysis within holding time limitations; deviations from the SOP, evaluation of performance based or in-house control limits, reference method limits or project specific limits.

The laboratory must maintain records to document the quality of data that is generated. Ongoing data quality checks are compared with established performance criteria to determine if the results of analyses meet the performance characteristics of the method. When results of sample spikes indicate atypical method performance, a calibration verification standard is used to confirm the measurements were performed in an in-control mode of operation. The data review is conducted according to SOP 1250 Data Review.

18.1 Blanks

The method blank must contain less than reporting level for all target compounds. If the blank exceeds these limits, the source of contamination must be investigated and corrective actions taken. Re-analyze the method blank. If after re-analysis, the blank criteria is still exceeded, stop the analysis prior to sample analyses and correct the problem. Consult with the department manager for guidance. Refer to a client specific QAPP for additional guidance, if applicable.

If samples were analyzed with a contaminated method blank during unattended automated analysis, affected samples must be reanalyzed or data must be appropriately qualified if:

1) The concentration of a targeted compound in the blank is at or above the reporting limit as established by the SOP or by regulation, AND is greater than 1/10 of the amount measured in any sample.

2) The blank contamination otherwise affects the sample results as per the test method requirements or the individual project data quality objectives.

18.2 Laboratory Control Samples (LCS)

The results of the individual batch LCS are calculated in percent recovery (%R) and compared to established acceptance criteria. Current acceptance criteria used are 70 - 130% (SW-846 8000B Section 8.5.4) and 50-150% for water soluble compounds, until in-house LCS limits for both soils and waters are developed. If LCS Duplicate (LCSD) is performed, recovery limits must be met and the Relative Percent Difference (RPD) see the STAT QAM, Section 5.4 for the calculation for RPD, must be less than 20%. If the LCS is outside the acceptance criteria the analytical system is "out of control". Any affected samples associated with an out of control LCS must be reprocessed and reanalyzed or the results reported with appropriate data qualifiers. If after re-analysis the control criteria has not been met, the entire analysis batch must be re-analyzed. Always refer to a client specific QAPP for additional guidance.

18.3 Surrogates

18.3.1 The results of the individual Surrogate compounds are calculated in percent recovery (%R) and are compared to established acceptance criteria derived from in house generated control limits, see Attachment 3. Water Surrogate Recovery Limits are per Method 8260B. Soil Surrogate Recovery Limits are based on in house control limits due to the high clay content of Northeastern Illinois soils. Surrogates outside the acceptance criteria must be re-analyzed to determine matrix effect. Separate Soil Surrogate Recovery Limits are generated for samples preserved with sodium bisulfate as this acid has a destructive matrix effect (excessive CO_2 generation, reduction of metals to the elemental state, carbon dilsulfide and sulfur dioxide generation) using this preservative.

If surrogate recoveries are not within the established acceptance criteria, proceed as follows (SW-846 8000B):

1) Check to be sure that there are no errors in the calculations, surrogate solutions or internal standards. If errors are found, recalculate the data accordingly. Examine chromatograms for interfering peaks and integrated peak areas.

2) Check instrument performance. If an instrument performance problem is identified, correct the problem and re-analyze the sample.

3) Some samples may require dilution in order to bring one or more target compounds within the calibration range or to overcome significant interferences with some compounds. This may result in the dilution of the surrogate responses to the point that the recoveries cannot be measured. If the surrogate recoveries are available from a less diluted or undiluted aliquot of the sample, those recoveries may be used to demonstrate that the surrogates were within the QC limits, and no further action is required. However, the results of both the diluted and undiluted (or less-diluted) analyses should be provided to the data user.

4) If no instrument problem is found and if sufficient sample is available, the sample should be re-analyzed.

18.3.2 If, upon re-analysis (in either 2 or 4 above), the recovery is again not within limits, generate a Quality Exception Report (QER) as referenced in SOP 230 Corrective Action. If the recovery is within the limits in the re-analysis, provide the re-analysis data to the data user. If the holding time for the method has expired prior to the re-analysis, provide both the original and reanalysis results to the data user, and note the holding time problem.

18.4 Duplicates

The results from laboratory Duplicates are designed to assess the precision of analytical results in a given matrix and are expressed as relative percent difference (RPD). See the STAT QAM, Section 5.4 for the

calculation for RPD. Results are compared to established acceptance criteria as listed in the MS/MSD Attachment 4. For duplicates results outside established criteria corrective action must be documented or the data reported with appropriate data qualifying codes.

For this test method, the analysis of the MS/MSD pair is used for determination of method precision. Duplicate LCS samples will be analyzed for all matrices where it would be impractical to perform a MS/MSD, such as wipe samples. Precision data from 18.2 will be used for RPD acceptance criteria for LCS/LCSD.

18.5 Matrix Spikes

18.5.1 The results from MS/MSD are primarily designed to assess the precision and accuracy of analytical results in a given matrix and are expressed as percent recovery (%R) and relative percent difference (RPD). See the STAT QAM, Section 5.4 for the calculation for RPD. Sixteen compounds are listed in Attachment 4 for in house generated recovery and RPD control limits. Results are compared to established acceptance criteria derived from in house generated control limits. Note: SW846 Method 8000B mandates that RPD's be calculated based on concentration rather than % recovery. VOC soils have widely varied samples weights due to EnCore/5035 preservations. This will lead to very broad RPD control limits. For matrix spike results outside established criteria corrective action must be documented or the data reported with appropriate data qualifying codes.

18.6 Internal Standards

The results of the individual Internal Standard compounds on all samples, blanks, and spikes are calculated in percent recovery (%R) and are compared to established acceptance criteria. If the Internal Standard recovery is outside the acceptance criteria, see Table 7, corrective action may be taken. Note: the recovery of internal standards in these samples within the stated limits is not mandatory per the reference method, 8260B. It can be a useful diagnostic tool. Client specific project criteria may require the adherence to these limits. If so, then corrective action must be documented or the data reported with appropriate data qualifying codes.

Table 7 Internal Standards

INTERNAL STD COMPOUND	CRITERIA (%)
Chlorobenzene-d_5	-50 to +200
Pentafluorobenzene	-50 to +200
1,4-Dichlorobenzene-d_4	-50 to +200
1,4-Difluorobenzene	-50 to +200

18.6 Other

The laboratory will analyze standard reference materials and/or participate in relevant performance evaluation studies quarterly.

19 CORRECTIVE ACTIONS FOR OUT-OF-CONTROL DATA

The process for handling unacceptable and out of control data is found in SOP 230 Corrective Action.

If the CCV, MB, LCS/LCSD, MS/MSD, lab duplicate, surrogate, or internal standard recovery of any parameter falls outside the designated acceptance range, the laboratory performance for that parameter is judged to be out of control, and the problem must be immediately identified and corrected. The analytical result for that parameter in the samples is suspect and is only reported for regulatory compliance purposes with the appropriate corrective action form. Immediate corrective action includes reanalyzing all affected samples by using any retained sample before the expiration of the

holding time. Final data results must be qualified in the client report for reported results not meeting the laboratory defined criteria.

1) Review standards preparation logbocks. Check all calculations and ensure dilution factors are properly recorded.
2) Re-prepare the suspected standard or QC sample to identify possible preparation errors of the standard or QC sample.
3) Re-Analyze the samples when the CCV or LCS are not within acceptable limits.
4) Perform routine preventative maintenance following manufacturer's specification. Record all maintenance in the instrument logbook.

20 CONTINGENCIES FOR HANDLING OUT-OF-CONTROL OR UNACCEPTABLE DATA

Every effort is made to prevent problems from occurring. When out of control or unacceptable data occurs the first option is to identify the problem and reanalyze the samples within the holding times. When this is not possible, the QA Manager and/or the Laboratory Director reviews data and discusses options with the client. Reanalysis or reporting the data with qualification are alternatives. Out of control or unacceptable data reported to the client must include the data qualifier, flag and discussion on the rationale for reporting.

Holding time exceedence, improper preservation and improper sample condition or storage are noted on the corrective action form and included on the final report.

Review the CCV standard response, LCS result, surrogate recovery, and internal standard recovery for acceptable performance for each batch of samples. Record any trends or unusual performance on a corrective action form. Final data results must be qualified in the client report for results not meeting the laboratory defined criteria.

Manual integration must be minimized for standards, reagent blanks and surrogates. Routine manual integration of the same parameters indicates a system performance problem. Correct this problem or note in the instrument analysis logbook the suspected causes for routine manual integration. Sign and date all manually integrated chromatograms.

20.1 The process for handling unacceptable and out of control data is found in the Laboratory QAM Section 11. The reporting of data that is out of control must be approved and documented by Quality Assurance Manager and either the Technical Manager or the Laboratory Director.

20.2 Client Requested Modifications:

20.2.1 Clients must request modifications from the laboratory SOP in writing to the lab.

20.2.2 The lab director, technical manager and quality assurance manager will evaluate the requested client deviations, determine the feasibly of the deviation and the potential effects on the data.

20.2.3 If it is determined that the lab will perform the requested deviations, lab director, technical manager and quality assurance manager will decide if a method validation study is required.

20.2.4 The designated project manager will retain all documentation concerning the requested deviation, including all correspondence with the client, in the client folder.

20.2.5 The final analytical report must include the statement "*This report has analyses performed using client requested modifications*".

21 WASTE MANAGEMENT

The STAT Analysis Corporation Waste Disposal SOP 1130 identifies proper waste management practices for the chemicals and biological materials used in this procedure. Samples are stored and discarded accordance with SOP 1130 Waste Disposal.

22 REFERENCES

22.1 Method 8260B, Revision 2; Method 5030B, Revision 2; Method 5035 Revision 0, U.S. EPA SW-846 "Test Methods for Evaluating Solid Waste, Physical/Chemical Methods" Update III, December 1996
22.2 STAT SOPs: 1210 [support equipment, recordkeeping, MDLs, etc]
22.3 SOP 230 Corrective Actions
22.4 SOP 1010 Standard and Reagent Preparation
22.5 SOP 1400 LIMS
22.6 SOP 1130 Waste Disposal
22.7 SOP 003 Chemical Hygiene Plan
22.8 SOP 1250 Data Review
22.9 Manufacturers' Equipment Instruction Manuals
22.10 SOP 1255 Manual Integration
22.11 SW-846 8000B Determinative Chromatographic Separations
22.12 SOP 1230 Training
22.13 "USEPA Contract Laboratory Program Statement of Work for Organic Analysis" Revision OLM04.2 May 1999, U. S. Environmental Protection Agency. Office of Solid Waste, Washington DC 20460.
22.14 NIST Library of Reference Spectra, 1998

23 FORMS, FIGURES, TABLES, DIAGRAMS, FLOWCHARTS, ATTACHMENTS OR VALIDATION DATA

Attachment 1
MDLs and REPORTING LIMITS FOR VOLATILE COMPOUNDS

CASN	Compound name	MDL (µg/L)	RL (µg/L)	RL (mg/L)	MDL (µg/Kg)	RL (µg/Kg)	RL (mg/Kg)
75-71-8	Dichlorodifluoromethane	0.2	10	0.01	0.1	10	0.01
75-01-4	Vinyl Chloride	0.2	5	0.005	0.1	5	0.005
74-87-3	Chloromethane	0.3	10	0.01	0.1	10	0.01
106-99-0	1,3-Butadiene	0.3	10	0.01	0.2	10	0.01
74-83-9	Bromomethane	0.6	10	0.01	0.3	10	0.01
75-00-3	Chloroethane	0.4	10	0.01	0.2	10	0.01
75-69-4	Trichlorofluoromethane	0.3	5	0.01	0.1	5	0.005
67-63-0	Isopropyl alcohol	39	400	0.4	55	400	0.4
67-64-1	Acetone	4.3	10	0.01	5.7	25	0.025
60297	Ethyl ether	0.4	50	0.05	0.2	50	0.05
76-13-1	Freon-TF	0.2	5	0.005	0.1	5	0.005
107925	Acrolein	1.6	50	0.05	2.9	50	0.05
75-35-4	1,1-Dichloroethene	0.2	5	0.005	0.1	5	0.005
75-15-0	Carbon Disulfide	0.3	5	0.005	0.1	5	0.005
75-09-2	Methylene Chloride	0.3	5	0.005	0.1	10	0.01
107131	Acrylonitrile	1.7	5	0.005	2.0	5	0.005
1634-04-4	MTBE	0.4	5	0.005	0.1	5	0.005
110-54-3	Hexane	0.3	5	0.005	0.1	5	0.005
156-60-5	trans-1,2-Dichloroethene	0.3	5	0.005	0.1	5	0.005
108-05-4	Vinyl acetate	0.4	10	0.01	1.5	10	0.01
75-34-3	1,1-Dichloroethane	0.2	5	0.005	0.1	5	0.005
78-93-3	2-Butanone	3.0	10	0.01	3.0	10	0.01
78-87-5	2,2-Dichloropropane	0.2	5	0.005	0.2	5	0.005
156-59-2	cis-1,2-Dichloroethene	0.3	5	0.005	0.1	5	0.005
67-66-3	Chloroform	0.3	5	0.005	0.1	5	0.005
78-83-1	Isobutyl alcohol	87	400	0.4	59	400	0.4
74-97-5	Bromochloromethane	0.2	5	0.005	0.2	5	0.005
141-78-6	Ethyl acetate	1.9	50	0.05	4.1	50	0.05
71-55-6	1,1,1-Trichloroethane	0.2	5	0.005	0.1	5	0.005
71-36-3	1-Butanol	55	400	0.400	69	400	0.4
563-58-6	1,1-Dichloropropene	0.3	5	0.005	0.1	5	0.005
56-23-5	Carbon Tetrachloride	0.3	5	0.005	0.1	5	0.005
107-06-2	1,2-Dichloroethane	0.2	5	0.005	0.1	5	0.005
71-43-2	Benzene	0.2	5	0.005	0.1	5	0.005
79-46-9	2-Nitropropane	1.6	50	0.05	2.9	50	0.05
74-95-3	Dibromomethane	0.1	5	0.005	0.3	5	0.005
79-01-6	Trichloroethene	0.2	5	0.005	0.1	5	0.005
78-87-5	1,2-Dichloropropane	0.3	5	0.005	0.1	5	0.005
107-06-2	1,4-Dioxane	50	200	0.2	33	200	0.2
75-27-4	Bromodichloromethane	0.3	5	0.005	0.2	5	0.005
110-75-8	2-Chloroethyl vinyl ether	4.8	50	0.05	1.2	50	0.05

Attachment 1
MDLs and REPORTING LIMITS FOR VOLATILE COMPOUNDS

CASN	Compound name	MDL (µg/L)	RL (µg/L)	RL (mg/L)	MDL (µg/Kg)	RL (µg/Kg)	RL (mg/Kg)
108-10-1	4-Methyl-2-Pentanone	0.4	10	0.01	0.2	10	0.01
10061-01-5	cis-1,3-Dichloropropene	0.3	5	0.005	0.1	5	0.005
108-88-3	Toluene	0.3	5	0.005	0.1	5	0.005
10061-02-6	trans-1,3-Dichloropropene	0.3	5	0.005	0.2	5	0.005
79-00-5	1,1,2-Trichloroethane	0.3	5	0.005	0.2	5	0.005
106-93-4	1,2-Dibromoethane	0.2	5	0.005	0.2	5	0.005
591-78-6	2-Hexanone	0.3	10	0.01	2.1	10	0.01
142-28-9	1,3-Dichloropropane	0.2	5	0.005	0.2	5	0.005
630-20-6	1,1,1,2-Tetrachloroethane	0.2	5	0.005	0.1	5	0.005
127-18-4	Tetrachloroethene	0.3	5	0.005	0.2	5	0.005
124-48-1	Dibromochloromethane	0.2	5	0.005	0.2	5	0.005
108-90-7	Chlorobenzene	0.2	5	0.005	0.2	5	0.005
100-41-4	Ethylbenzene	0.2	5	0.005	0.1	5	0.005
108-38-3	m&p-Xylene	0.5	10	0.01	0.3	10	0.01
95-47-6	o-Xylene	0.3	5	0.005	0.2	5	0.005
100-42-5	Styrene	0.2	5	0.005	0.2	5	0.005
75-25-2	Bromoform	0.2	5	0.005	0.9	5	0.005
108-94-1	Cyclohexanone	420	500	0.5	120	500	0.5
98-82-8	Isopropylbenzene	0.3	5	0.005	0.2	5	0.005
79-34-5	1,1,2,2-Tetrachloroethane	0.2	5	0.005	0.2	5	0.005
96-18-4	1,2,3-Trichloropropane	0.7	5	0.005	1.8	5	0.005
103-65-1	n-Propylbenzene	0.2	5	0.005	0.2	5	0.005
108-86-1	Bromobenzene	0.2	5	0.005	0.3	5	0.005
108-67-8	1,3,5-Trimethylbenzene	0.3	5	0.005	0.1	5	0.005
95-49-8	2-Chlorotoluene	0.2	5	0.005	0.7	5	0.005
106-43-4	4-Chlorotoluene	0.3	5	0.005	0.6	5	0.005
611-14-3	1-Ethyl-2-methylbenzene	0.3	5	0.005	0.2	5	0.005
98-06-6	tert-Butylbenzene	0.3	5	0.005	0.2	5	0.005
95-63-6	1,2,4-Trimethylbenzene	0.2	5	0.005	0.2	5	0.005
135-98-8	sec-Butylbenzene	0.3	5	0.005	0.2	5	0.005
98-82-8	p-Isopropyltoluene	0.3	5	0.005	0.2	5	0.005
541-73-1	1,3-Dichlorobenzene	0.3	5	0.005	0.4	5	0.005
106-46-7	1,4-Dichlorobenzene	0.2	5	0.005	0.4	5	0.005
104-51-8	n-Butylbenzene	0.3	5	0.005	0.3	5	0.005
95-50-1	1,2-Dichlorobenzene	0.3	5	0.005	0.3	5	0.005
96-12-8	1,2-Dibromo-3-chloropropane	1.4	10	0.010	2.1	10	0.010
87-61-6	1,2,3-Trichlorobenzene	0.5	5	0.005	0.9	5	0.005
120-82-1	1,2,4-Trichlorobenzene	0.4	5	0.005	0.9	5	0.005
87-68-3	Hexachlorobutadiene	0.8	5	0.005	0.6	5	0.005
91-20-3	Naphthalene	0.3	15	0.015	0.9	15	0.015

Attachment 2
CHARACTERISTIC IONS FOR VOLATILE COMPOUNDS

#	Compounds	Retention Time (min.)	Primary Ion	Secondary Ion(s)
1	Dichlorodifluoromethane	1.22	85	87
2	Vinyl Chloride	1.43	62	64
3	Chloromethane	1.35	50	52
4	1,3-Butadiene	1.45	39	54
5	Bromomethane	1.65	94	96
6	Chloroethane	1.73	64	66
7	Trichlorofluoromethane	1.93	101	103
8	Ethyl ether	2.17	59	45,74
9	Isopropyl Alcohol	2.54	45	43,59
10	Acrolein	2.27	56	55
11	Acetone	2.4	43	58
12	Freon-TF	2.36	151	101,152
13	1,1-Dichloroethene	2.36	96	61, 63
14	Carbon Disulfide	2.54	76	78
15	Methylene Chloride	2.77	84	49, 86
16	Acrylonitrile	2.99	53	52, 51
17	MTBE	3.02	73	57
18	Hexane	3.27	57	56, 41
19	trans-1,2-Dichloroethene	3.02	96	61, 98
20	Vinyl acetate	3.46	43	86
21	1,1-Dichloroethane	3.4	63	65, 83
22	2-Butanone	3.97	72	43, 57
23	Ethyl Acetate	4.04	45	43, 61
24	2,2-Dichloropropane	3.95	77	41,97
25	cis-1,2-Dichloroethene	3.95	96	61, 98
26	Chloroform	4.27	83	85, 47
27	Isobutyl Alcohol	4.79	43	74,41,42
28	Bromochloromethane	4.18	128	130, 49
29	1,1,1-Trichloroethane	4.44	97	61, 99
30	1-Butanol	5.5	56	41, 43
31	1,1-Dichloropropene	4.61	75	110, 77
32	Carbon Tetrachloride	4.61	117	119, 82
33	1,2-Dichloroethane	4.84	62	49, 98
34	Benzene	4.82	78	51
35	Dibromomethane	5.88	93	95, 174
36	Trichloroethene	5.51	95	97, 130, 132
37	1,2-Dichloropropane	5.75	63	112
38	2-Nitropropane	6.33	41	39, 43
39	1,4-Dioxane	5.92	88	58
40	Bromodichloromethane	6.07	83	85, 127
41	2-Chloroethylvinyl ether	6.44	63	65, 106
42	4-Methyl-2-Pentanone	6.78	43	58,85
43	cis-1,3-Dichloropropene	6.59	75	77, 39
44	Toluene	6.97	92	91
45	trans-1,3-Dichloropropene	7.26	75	77, 39
46	1,1,2-Trichloroethane	7.48	83	85, 97

Attachment 2
CHARACTERISTIC IONS FOR VOLATILE COMPOUNDS

#	Compounds	Retention Time (min.)	Primary Ion	Secondary Ion(s)
47	1,2-Dibromoethane	8.08	107	109, 188
48	2-Hexanone	7.81	43	58, 100
49	1,3-Dichloropropane	7.68	76	78
50	1,1,1,2-Tetrachloroethane	8.84	131	133, 119
51	Tetrachloroethene	7.63	164	129, 131, 166
52	Dibromochloromethane	7.95	129	127
53	Ethylbenzene	8.88	91	106
54	m&p-Xylene	9.04	106	91
55	o-Xylene	9.56	106	91
56	Styrene	9.59	104	78
57	Bromoform	9.81	173	175, 254
58	Chlorobenzene	8.72	112	77, 114
59	Isopropyl benzene	10.07	105	120
60	1,1,2,2-Tetrachloroethane	10.5	83	131, 85
61	Cyclohexanone	10.17	55	42, 69
62	1,2,3-Trichloropropane	10.90	75	77
63	n-Propyl benzene	10.64	91	120
64	Bromobenzene	10.44	156	77, 158
65	1,3,5-Trimethylbenzene	10.9	105	120
66	2-Chlorotoluene	10.73	91	126
67	4-Chlorotoluene	10.83	91	126
68	1-Ethyl-2-methylbenzene	11.17	105	120
69	tert-Butylbenzene	11.34	119	91, 134
70	1,2,4-Trimethylbenzene	11.41	105	120, 77
71	sec-Butylbenzene	11.65	105	134
72	p-Isopropyl Toluene	11.87	119	91, 134
73	1,3-Dichlorobenzene	11.77	146	111, 148
74	1,4-Dichlorobenzene	11.9	146	111, 148
75	n-Butylbenzene	12.46	91	92, 134
76	1,2-Dichlorobenzene	12.41	146	111, 148
77	1,2-Dibromo-3-chloropropane	13.54	75	155, 157
78	1,2,3-Trichlorobenzene	15.43	180	182, 145
79	1,2,4-Trichlorobenzene	14.74	180	182, 145
80	Hexachlorobutadiene	15.02	225	223, 227
81	Naphthalene	15.07	128	102
	Internal Standards:			
82	Pentafluorobenzene	4.49	168	99
83	1,4-Difluorobenzene	5.24	114	88
84	Chlorobenzene-d5	8.68	82	117, 119
85	1,4–Dichlorobenzene-d4	11.87	152	115, 150
	Surrogates:			
86	Dibromofluoromethane	4.43	113	111,192
87	1,2-Dichloroethane-d4	4.76	102	65
88	Toluene-d8	6.89	98	100
89	Bromoflurobenzene	10.27	174	95, 176

Attachment 3
SURROGATES RECOVERY LIMITS FOR VOC COMPOUNDS

Surrogate Compound	Soil % Recovery	Water% Recovery
1,2-Dichloroethane-d4	84 - 129	80 - 120
Toluene-d_8	85 - 110	88 - 110
4-Bromofluorobenzene	63 - 110	86 - 115
Dibromofluoromethane	83 - 119	86 - 118
$NaHSO_4$ Preserved		
1,2-Dichloroethane-d4	78 – 160	
Toluene-d_8	62 - 122	
4-Bromofluorobenzene	44 - 114	
Dibromofluoromethane	74 - 150	

Attachment 4
MS/MSD RECOVERY LIMITS FOR VOC COMPOUNDS

MATRIX SPIKE –WATER			
Compound	Amount added µg/L	RPD Limit	% Recovery
1,1-Dichloroethene	50	15	64 - 140
Methylene Chloride	50	11	71 - 134
trans-1,2-Dichloroethene	50	12	76 - 130
1,1-Dichloroethane	50	10	71 - 123
cis-1,2-Dichloroethene	50	8	71 - 133
Chloroform	50	9	74 - 127
1,1,1-Trichloroethane	50	9	87 - 118
Carbon tetrachloride	50	9	78 - 121
Benzene	50	8	78 - 123
Trichloroethene	50	11	74 - 124
cis-1,3-Dichloropropene	50	10	77 - 129
Toluene	50	10	80 - 123
trans-1,3-Dichloropropene	50	9	73 - 149
Tetrachloroethene	50	8	80 - 120
Chlorobenzene	50	8	88 - 115
Ethylbenzene	50	10	83 - 119
MATRIX SPIKE –SOIL			
Compound	Amount added µg/Kg	RPD Limit	% Recovery
1,1-Dichloroethene	50	54	61 - 137
Methylene Chloride	50	53	63 - 131
trans-1,2-Dichloroethene	50	53	61 - 134
1,1-Dichloroethane	50	54	60 - 123
cis-1,2-Dichloroethene	50	55	55 - 129
Chloroform	50	56	56 - 129
1,1,1-Trichloroethane	50	51	62 - 137
Carbon tetrachloride	50	55	59 - 131
Benzene	50	53	56. - 129
Trichloroethene	50	58	31 - 135
cis-1,3-Dichloropropene	50	58	45 - 120
Toluene	50	58	39 - 131
trans-1,3-Dichloropropene	50	65	45 - 133
Tetrachloroethene	50	62	39 - 132
Chlorobenzene	50	64	35 - 121
Ethylbenzene	50	59	41 - 130

Attachment 5
Volatile Internal Standards with Corresponding Compounds Assigned for Quantitation

Pentafluorobenzene (I)	1,4-Difluorobenzene (I)	Chlorobenzene-d5 (I)	1,4-Dichlorobenzene-d4 (I)
Dichlorodifluoromethane	1,2-Dichloroethane-d4 (S)	trans-1,3-Dichloropropene	1,2,3-Trichloropropane
Chloromethane (SPCC)	Isobutyl Alcohol	2-Hexanone	n-Propylbenzene
Vinyl Chloride (CCC)	Carbon Tetrachloride	1,1,2-Trichloroethane	Bromobenzene
1,3-Butadiene	1,2-Dichloroethane	1,3-Dichloropropane	1,3,5-Trimethylbenzene
Bromomethane	1,1,1-Trichloroethane	Tetrachloroethene	2-Chlorotoluene
Chloroethane	1,1-Dichloropropene	Dibromochloromethane	4-Chlorotoluene
Trichlorofluoromethane	1-Butanol	1,2-Dibromoethane	1-Ethyl-2-methylbenzene
Ethyl ether	Benzene	Chlorobenzene (SPCC)	tert-Butylbenzene
Isopropyl Alcohol	Trichloroethene	Ethylbenzene (CCC)	1,2,4-Trimethylbenzene
Acrolein	1,2-Dichloropropane (CCC)	1,1,1,2-Tetrachloroethane	sec-Butylbenzene
Acetone	1,4-Dioxane	m&p-Xylene	p-Isopropyl Toluene
Freon-TF	2-Nitropropane	o-Xylene	1,3-Dichlorobenzene
1,1-Dichloroethene (CCC)	Bromodichloromethane	Styrene	1,4-Dichlorobenzene
Methylene Chloride	Dibromomethane	Isopropyl benzene	n-Butylbenzene
Carbon Disulfide	2-Chloroethylvinyl ether	Cyclohexanone	1,2-Dichlorobenzene
Acrylonitrile	4-Methyl-2-Pentanone	Bromoform (SPCC)	1,2-Dibromo-3-hloropropane
MTBE	cis-1,3-Dichloropropene	1,1,2,2-Tetrachloroethane (SPCC)	1,2,4-Trichlorobenzene
Hexane	Toluene-d8 (S)	Bromofluorobenzene (S)	Hexachlorobutadiene
trans-1,2-Dichloroethene	Toluene (CCC)		Naphthalene
Vinyl acetate			1,2,3-Trichlorobenzene
1,1-Dichloroethane (SPCC)			
2-Butanone			
Ethyl Acetate			
2,2-Dichloropropane			
cis-1,2-Dichloroethene			
Chloroform (CCC)			
Bromochloromethane			
Dibromofluoromethane (S)			

(I) = Internal Standard
(S) = Surrogate
(CCC) = Calibration Check Compounds
(SPCC) = System Performance Check Compounds

STAT Analysis Corporation

Book No.: 282
Page 1 of 100

VOC SOIL PREP LOG

Date/Time	Analyst	Work Order	Sample Number	Sampling Type	Weight (gm)					
					Samp	Batch #	RA	Batch #	MeOH *	Batch #

Comments: ______________________________

* MeOH 5 mls final volume (unless otherwise indicated) MeOH Reagent ID:________

Reviewed By: ________________ Date: ______

STA Analysis Corporation:

STANDARD OPERATING PROCEDURE 4020

SEMIVOLATILE ORGANIC COMPOUNDS BY GAS CHROMATOGRAPHY/MASS SPECTROMETRY (GC/MS) (EPA Method 8270C)

Revision 03
Effective Date: October 31, 2003

Author: Jeremiah Favero

Printed Name	**Signature/Date**
Jeremiah Favero Organic Manager	_____
Laurie Fetterman QA Manager	_____
Dennis Jachim Technical Manager	_____
Thomas M. Bauer Laboratory Director	_____

This Standard Operating Procedure has been prepared for the sole use of STAT Analysis Corporation.

Copy Number: _____

The absence of a Copy Number indicates this is an uncontrolled copy of the document supplied for information only.

Table of Contents

Title Page 1
Table of Contents 2
1. Identification of Test Method 3
2. Applicable Matrix or Matrices 3
3. Detection Limits 3
4. Scope and Application 3
5. Summary of Test Method 4
6. Definitions 4
7. Interferences 4
8. Safety 5
9. Equipment and Supplies 5
10. Reagents and Standards 5
11. Sample Collection, Preservation, Shipment and Storage 9
12. Quality Control 9
13. Calibration and Standardization 10
14. Procedure 16
15. Data Reduction, Calculations and Loading 23
16. Method Performance 24
17. Pollution Prevention 26
18. Data Assessment and Criteria For Quality Control Measures 26
19. Corrective Actions for Out-Of-Control Data 31
20. Contingencies for Handling Out-Of-Control Or Unacceptable Data 31
21. Waste Management 32
22. References 32
23. Forms, Figures, Tables, Diagrams, Flowcharts, Attachments or Validation Data 33
Attachment 1 MDLs and Reporting Limits for SemiVolatile Compounds 33
Attachment 2 Characteristic Ions for SemiVolatile Compounds 35

1.0 IDENTIFICATION OF TEST METHOD

SOP Title: SemiVolatile Organic Compounds by Gas Chromatography/Mass Spectrometry (GC/MS) is abbreviated as SVOC in laboratory records.

2.0 APPLICABLE MATRICES

Methylene chloride and organic solvent extracts from soil, sediment, ground and surface water, and mobility extracts are analyzed using this method.

3.0 DETECTION LIMITS

The lab follows the procedure found in 40CFR Part 136B to determine the MDL for each matrix type on an annual basis. See the STAT Analysis SOP 1210 for the MDL procedure, frequency and acceptance criteria. The MDLs measured by the lab and all supporting documentation are in the laboratory QA files for review.

The laboratory determined MDL must always be less than the reporting limit (RL), which is determined by the lowest calibration standard. The RLs will usually range from three to ten times the laboratory measured MDLs but this relationship may vary dependent on dilution of sample aliquots, matrix interferences, moisture adjustments (in solid samples), or method-specified requirements. Attachment 1 contains the current MDLs and reporting limits (RLs) for this SOP.

4.0 SCOPE AND APPLICATION

4.1 This standard operating procedure describes in detail the precise methods used at STAT Analysis Corporation for the analysis of environmental samples for SemiVolatile Organic Compounds (SVOCs) by GC-MS. This SOP as written is to be applied when SW-846 Method 8270C is requested. This SOP is used to determine the concentration of (SVOC's) in extracts prepared from all types of solid waste matrices, soils, and ground water.

4.2 SOP 4020 can be used to quantitate SVOCs that are soluble in methylene chloride and other organic solvents and are capable of being eluted without derivatization as sharp peaks from a gas chromatographic fused-silica capillary column coated with a slightly polar silicone. See Attachment 2 for a list of compounds and their characteristic ions that have been evaluated on the specified GC/MS system.

4.3 The reporting limits (RLs) for this SOP are shown in Attachment 1 for soils and water. RLs will be proportionately higher for sample extracts and samples that require dilution or reduced sample size to avoid saturation of the detector.

4.4 This method is restricted to use by or under the supervision of analysts experienced in the use of a Gas Chromatograph/Mass Spectrometer (GC/MS) and skilled in the interpretation of mass spectra. Each analyst must demonstrate the ability to generate acceptable results with this method.

5.0 SUMMARY OF TEST METHOD

5.1 Prior to using this method, the samples must be prepared for the GC/MS using the appropriate sample preparation and cleanup SOPs (Section 14.1). Samples are extracted at neutral pH with methylene chloride. This method describes chromatographic conditions that will allow for the separation of the compounds in the extract and for their qualitative and quantitative analysis by gas chromatography/mass spectrometry. Identification of target analytes is accomplished by comparing component retention times to those of authentic standards and by comparing their mass spectra with the electron impact (or electron impact-like) spectra of authentic standards. Quantitation is accomplished by comparing the response of a major (quantitation) ion relative to an internal standard using a five-point calibration curve.

5.2 **Method Modifications from Reference** – This SOP is based on EPA Method 8270C except that no polychlorinated biphenyls (PCBs), pesticides, organophosphate esters or quinolines are reported. PCBs and Pesticides are reported using STAT Analysis SOP 4050. Organophosphate esters and quinolines are not reported by the lab. The Mass Spectrometer Tuning criteria used in this SOP is referenced from the CLP Statement of Work (SOW) for Organic Analyses Revision OLM04.2 May 1999. This is an option in Method SW-846 8270C.

6.0 DEFINITIONS

The STAT Analysis Quality Manual Section 19.0 contains all the definitions of standard terms used in SOPs.

7.0 INTERFERENCES

7.1 Raw GC/MS data from all blanks, samples, and spikes must be evaluated for interferences. Determine if the source of interference is in the preparation and/or cleanup of the samples and take corrective action to eliminate the problem.

7.2 Contamination by carryover can occur whenever high-concentration and low-concentration samples are sequentially analyzed. To reduce carryover, the sample syringe must be rinsed out between samples with solvent. Whenever an unusually concentrated sample is encountered, the sample after it must be reanalyzed to check for cross contamination.

8.0 SAFETY

Methylene chloride is a suspected carcinogen as are numerous compounds analyzed by this method. Proper personal protective equipment including safety glasses, nitrile gloves and a lab coat are required during different parts of this method. Other safety precautions must be conducted in accordance with the Chemical Hygiene Plan (STAT QA SOP 003). Other actions can also be applied if deemed necessary. A reference file of Material Safety Data Sheets (MSDS) is available to all personnel involved in this method.

9.0 EQUIPMENT AND SUPPLIES

The following apparatus is recommended for performing this procedure. Equivalent items can be used, if with their use, the analytical and QA/QC requirements in this SOP can be met. All catalog numbers in this SOP are current as of the effective date and thereafter subject to change.

9.1 Gas Chromatograph/Mass Spectrometer system (GC/MS)

9.1.1 Gas chromatograph(GC) – Agilent 6890 with electronic flow control gas chromatograph with the column directly coupled to the source. Equipped with an Agilent Autosampler Model 7683

9.1.2 Column - 30 m x 0.25 mm ID (or 0.33mm ID) 0.5µm film thickness silicone-coated fused-silica capillary column (J&W Scientific HP-5MS).

9.1.3 Mass spectrometer(MS) - Agilent 5973N.

9.1.4 Data system - An Agilent Kayak computer system using 3365 Chemstation Version C.00.01 to interpret data is attached to the GC.

9.1.5 NIST Library of Reference Spectra, Edition Number NIST98

9.2 Micro syringes - 10 µL, 25 µL, 100 µL, 250 µL, 500 µL and 1,000 µL.

9.3 Volumetric flasks, Class A - 10 mL, 25 mL, 50 mL with ground glass stoppers.

9.4 Glass vials - 2-mL, for GC auto sampler with Teflon-lined screw caps or crimp tops.

9.5 Amber glass vials - 10 mL with Teflon-lined screw caps

10.0 REAGENTS AND STANDARDS

The following reagents and standards are required to perform this procedure. When instructions are given on how to prepare a specific volume of a reagent or standard, larger or smaller volumes can be prepared as needed so long as the final concentrations remain the same. Any other deviations from the reagents or

standards listed in this SOP could be detrimental to the quality of the data produced. Such deviations would have to be approved and documented (see SOP QA 230 Corrective Action). Equivalent items can be used, if with their use, the analytical and QA/QC requirements in this SOP can be met.

Instructions for labeling and record keeping of reagents and standards are contained in SOP 1010 Analytical Standards and Reagents Receipt and Preparation.

10.1 Analytical reagent grade chemicals shall be used in all tests. Unless otherwise indicated, all reagents shall conform to the specifications of the Committee on Analytical Reagents of the American Chemical Society, where such specifications are available.

10.2 Organic-free reagent water - All references to water in this SOP refers to Type II reagent water (in-house system).

10.3 Stock Standard solutions - Standard solutions can be prepared from pure standard materials or purchased as certified solutions (e.g. SV standards). The routine laboratory practice is to purchase these standards from approved vendors. The standards used are: 8270 MegaMix (Restek Catalog # 31686), 605-Benzidines Standard (Restek Catalog # 31030), Custom 8270 Addition (Restek Catalog # 555680), Base/Neutral Surrogate Spike Mix (Restek Catalog # 31072) and Acids Surrogate Spike Mix (Restek Catalog # 31003). Stock standard solutions and QC solutions are stored at < -10°C and must be replaced after six months, or sooner if comparison with quality control check samples indicates a problem. Different storage conditions and expiration dates of other solutions are noted as warranted.

10.3.1 Secondary Stock Standard Solution – This solution is made using the individual Stock Standard solutions. Using microliter syringes, the following amounts of each Stock Standard solution is injected into a 10 mL volumetric flask. The solution is brought to volume with methylene chloride. The final concentration of each component is listed in Table 1. Note: this Secondary Stock Standard solution is also used as the high-level calibration standard. It is also the source solution to prepare the calibration standards in Section 10.4. This standard is stored at < -10°C in a 10 mL amber screw cap vial equipped with a Teflon lined cap. It is freshly prepared every six months, or sooner if check standards indicate a problem.

Table 1 Secondary Stock Standard Solution

Stock Solution	Conc. Stock (µg/ml)	Vol. Stock (µL)	Final Conc. (µg/ml)
8270 Mega-mix	500-1000	1600	160
605 Benzidines	2000	800	160
Custom 8270 Addition	2000	800	160
B/N Surr.	5000	320	160
Acid Surr.	1500	1067	160

10.4 Calibration standards - A minimum of five calibration standards are prepared. The low standard is the RL and above the MDL. The others define the working range of the GC/MS system. Calibration standards in current use: 5, 10, 20, 50, 80, 120 and 160 µg/ml. (Table 2). Using microliter syringes, the following amount of the Secondary Stock solution is injected into a 1 ml syringe. The solution is brought to volume with Methylene chloride. The final concentration of each component is listed in Table 2. Each solution is transferred to an autosampler vial. Each 1 mL aliquot of calibration standard must be spiked with 10 µL of the internal standard solution (4000 µg/ml) prior to analysis. Storage is as indicated in 10.1.4. The continuing calibration verification standards (CCV) are prepared weekly and stored at 4°C. Levels 2, 3 and 4 (20, 50, 80 µg/mL) are used for the CCVs.

Table 2 Calibration Standards

Level	Volume (µL) Secondary Stock	Volume (µL) $MeCl_2$	Final Concentration (µg/ml)
1	31.25	968.75	5
2	62.5	937.5	10
3	125	875	20
4	312.5	687.5	50
5	500	500	80
6	750	250	120
7	1000	0	160

10.5 Surrogate standards - The surrogate standards phenol-d_6, 2-fluorophenol, 2,4,6-tribromophenol, nitrobenzene-d_5, 2-fluorobiphenyl and p-terphenyl-d_{14} (1,2-dichlorobenzene-d_4, 2-chlorophenol-d_4 are optional surrogate compounds). Surrogate stock solutions are purchased from Supelco (Cat. No. 4-7261 and 4-7262, store at room temp until dilution is prepared). The spike solution is prepared by injecting 1000 µL of the stock standard solution, concentration of 5000 µg/mL for Base/Neutrals and 10000 µg/mL for Acids, into a 100mL volumetric flask. The flask is diluted to the mark with methanol for a final concentration of 50 µg/mL for Base/Neutral surrogates and 100 µg/mL for Acid surrogates. All samples, blanks, LCSs, and MS/MSDs are spiked with 1.0 mL of the surrogate spike solution prior to extraction. This standard is stored at $< -10°C$ in an amber glass vial with a Teflon lined screw cap.

10.6 Internal standard solutions - The internal standards used are 1,4-dichlorobenzene-d_4, naphthalene-d_8, acenaphthene-d_{10}, phenanthrene-d_{10}, chrysene-d_{12}, and perylene-d_{12}. The SV internal standards containing the recommended compounds at 4000 µg/mL are purchased from Supelco (cat. no. 4-7906). Just prior to analysis 10 µL of the solution (4000 µg/ml) is injected into each sample vial. Store at room temperature per manufacturer's instructions when not being used. The internal standards permit most of the compounds of interest in a chromatogram to have retention times of 0.80-1.20 relative to one of the internal standards. Use the base peak ion from the specific internal standard as the primary ion for quantitation (see Attachment 2, i.e. for 1,4-dichlorobenzene-d_4, use 152 m/z for quantitation). If interferences are noted, use the next most intense ion as the quantitation ion.

10.7 GC/MS tuning standard - A methylene chloride solution containing 50 ng/µL each of decafluorotriphenylphosphine (DFTPP), 4,4'-DDT, pentachlorophenol, and benzidine is used to tune the mass spectrometer, and to verify injection port inertness and GC column performance. The SV tuning standard is purchased from Supelco (Cat. No. 4-7387). Store at < -10°C when not being used. Inject 1 µL of this standard at the start of every 12 hours of operation.

10.8 Laboratory Control Sample/Matrix Spike standards - The LCS/matrix spike compounds are phenol, 2-chlorophenol, 1,4-dichlorobenzene, N-nitrosodi-n-propylamine, 1,2,4-trichlorobenzene, 4-chloro-3-methylphenol, acenaphthene, 4-nitrophenol, 2,4-dinitrotoluene, pentachlorophenol and pyrene. Samples will be spiked with acid compounds at 100 mg/sample, 3330 mg/kg for soil and 100 mg/L for water and base/neutral compounds at 50 mg/sample, 1670 mg/kg for soil and 50 mg/L for water (see SOP 3500 for LCS/Matrix Spike Solution preparation). This standard is stored at < -10°C in an amber glass vial with a Teflon lined screw cap.

10.9 Initial Calibration Verification Standard – A standard prepared from a different source at the midpoint of the calibration to verify the initial calibration. This solution concentration is 50 µg/mL The solution is made using the individual ICV Stock Standard solutions purchased from Supelco. Using microliter syringes, the following amounts of each Stock Standard solution is injected into a 10 mL volumetric flask. The solution is brought to volume with methylene chloride. The final concentration of each component is listed in Table 1a. This standard is stored at < -10°C.

Table 1a ICV Secondary Stock Standard Solution

Stock Solution	Conc. Stock (µg/ml)	Vol. Stock (µL)	Final Conc. (µg/ml)
TCL Base/Neutrals Mix 1	2000	250	50
TCL Base/Neutrals Mix 2	2000	250	50
TCL PNA Mix	2000	250	50
TCL Phenols Mix	2000	250	50
TCL Benzidine Mix	2000	250	50
TCL Hazardous Mix 1	2000	250	50
TCL Hazardous Mix 2	2000	250	50
3-Methyl Phenol Standard	5000	100	50
1-Chloronaphthalene Standard	2000	250	50
B/N Surrogate	5000	100	50
Acids Surrogate	10000	50	50

10.8 Acetone, hexane, methylene chloride, isooctane, carbon disulfide, toluene and other appropriate solvents, pesticide quality or equivalent.

10.9 Helium – UHP grade

11.0 SAMPLE COLLECTION, PRESERVATION, AND HANDLING

11.1 Containers used to collect samples for the determination of semivolatile organic compounds are glass: 1 Liter bottles for water samples and various size jars for soil samples. They are equipped with screw caps with Teflon liners. Water samples containing residual chlorine should be field treated to remove the chlorine prior to collection. Plastic containers or lids may NOT be used for the storage of samples due to the possibility of sample contamination from the phthalate esters and other hydrocarbons within the plastic.

11.2 Samples must be stored under refrigeration at between 0.1 and 6.0°C. Extraction must be within 7 days from sampling date for water and 14 days for solids. Sample extracts are stored in the dark at between 0.1 and 6.0°C and must be analyzed within 40 days of extraction.

11.3 No chemical preservation is required for this method.

11.4 All samples are stored away from all standards, reagents, food, and other potentially contaminating sources in order to prevent cross contamination.

12.0 QUALITY CONTROL

The following details the QC requirements that apply to this analysis. Each Quality Control Indicator (QCI) provides information pertaining to either method or individual sample performance. Our goal is to produce defensible data of known and documented quality. The results of these Quality Control Indicator (QCI) samples are used to assess the acceptability of data.

12.1 Blanks

Method Blank analysis is performed to determine if any contamination is present in the analytical process and is used to evaluate acceptance of the batch of samples. A method blank shall be prepared once per preparation batch of 20 or less samples per matrix type. If more than 20 samples are prepared a second blank shall be prepared after the twentieth sample. The method blank shall be processed through all preparatory steps used for the samples, including cleanup procedures. The blank shall be analyzed using the same instrument and conditions as the samples.

The Solvent Blank, clean solvent injected into the GC/MS, is used to monitor the GC/MS system for potential cross-contamination from one sample to another or for residual contamination in the system.

12.2 Calibration Verification

An Initial Calibration Verification (ICV) standard containing all of the target analytes reported in this method (refer to section 10.9) shall be analyzed immediately after the completion of the initial calibration. The ICV shall be purchased from a second source to verify analyte concentrations.

12.3 Laboratory Control Sample (LCS)

The LCS is used to evaluate the performance of the total analytical system, including all preparation and analysis steps. The LCS shall be prepared once per preparation batch of 20 or less samples per matrix type. If more than 20 samples are prepared a second LCS shall be prepared after the twentieth sample.

The LCS shall be processed through all preparatory steps used for the samples, including cleanup procedures. The LCS shall be analyzed using the same instrument and conditions as the samples. Refer to section 10.8 for LCS analytes and concentrations.

12.4 Surrogates

The surrogates used for this method are added to all samples, standards, and blanks. Refer to section 10.5 for preparation and concentration instructions.

12.5 Duplicates

Duplicates of field samples or of the LCS must be prepared in compliance with the method requirements and client directives. Duplicate LCS's are prepared for sample wipes. It would be impractical to prepare a matrix spike and matrix spike duplicate. Reproducibility performance would be the same as for a matrix spike/matrix spike duplicate.

12.6 Matrix Spike and Matrix Spike Duplicate (MS/MSD)

MS/MSDs indicate the effect of the sample matrix on the precision and accuracy of the results generated using the selected method. This information does not determine the validity of the entire batch. MS/MSDs must be analyzed at a minimum of 1 per 20 samples per matrix per preparation procedure, or one per preparation batch, or as specified by the required test method. For cases where the sample cannot be divided (e.g., wipes, air samples, not enough sample provided by customer) and thus a MS/MSD pair is cannot be prepared in the preparation batch, an LCS/LCSD pair is prepared and analyzed to measure precision. Samples chosen for matrix spiking are rotated among different clients and/or different client projects. This is accomplished through communication between the Department Manager and the analyst. In addition, designated samples, as indicated by client request or contract requirement, are matrix spiked. The MS/MSD pair shall be processed through all preparatory steps used for the samples. They shall be analyzed using the same instrument and conditions as the samples. Refer to section 10.8 for MS analytes and concentrations. Some clients may require different spiking levels and/or target analytes, these specific needs are documented on the request for analysis forms.

12.7 Internal Standards

The internal standards used for this method are added to all samples, standards, and blanks. Refer to section 10.6 for preparation and concentration instructions.

13.0 CALIBRATION AND STANDARDIZATION

13.1 Mass Spectrometer Tuning

Each GC/MS system must be software-tuned to meet the criteria in Table 3 for a 50 ng injection of DFTPP. Analyses must not begin until all these criteria are met. Tuning criteria used in this SOP is referenced from the CLP Statement of Work (SOW) for Organic Analyses Revision OLM04.2 May 1999.

Using the ChemStation software to tune the GC/MS perform the following steps:

Set oven temperature to 250 °C (the elution temperature for DFTPP)

On the Instrument Control Panel click on View/Manual Tune…
On the Manual Tune Panel click on File/Load Tune Values/ and select DFTPP.u
On the Manual Tune Panel click on Tune/DFTPP Tune
The software automatically adjusts the tune parameters using PFTBA to meet the criteria in Table 3. After the software has completed the tune click on File/Save Tune Values/ and select DFTPP.u and save the new parameters.
Click on View/Instrument Control to start analyzing standards and samples.

Table 3 Acceptance Criteria for DFTPP

Target Mass	Relative to Mass	Lower Limit%	Upper Limit%
51	198	30	80
68	69	0	2
69	198	0	100
70	69	0	2
127	198	25	75
197	198	0	1
198	198	100	100
199	198	5	9
275	198	10	30
365	198	1	100
441	443	0.01	100
442	198	40	110
443	442	15	24

Using the autosampler, inject 1 µL of DFTPP tuning standard solution on to the column. Analyze the solution using the DFTPP method which accelerates the elution of the compounds of interest.

Background subtraction must be straightforward and designed only to eliminate column bleed or instrument background ions. Obtain a background-corrected mass spectrum of DFTPP and confirm that all the key m/z criteria in Table 3 are achieved. Three scans (the peak apex scan and the scans immediately preceding and following the apex) are acquired and averaged. Background subtraction is required, and must be accomplished using a single scan no more than 20 scans prior to the elution of DFTPP. Do not background subtract part of the DFTPP peak. Option: a single scan with background subtraction can also be used to evaluate the DFTPP spectrum. Note: the tuning file used to obtain and evaluate the DFTPP criteria must also be used to obtain and evaluate the sample data. If the criteria are not passed, the analyst must perform needed maintenance, retune the mass spectrometer and repeat the test until all criteria are achieved.

The GC/MS tuning standard must also be used to assess GC column performance and injection port inertness. Degradation of DDT to DDE and DDD must not exceed 20%. The following formula is used to calculate the percent breakdown:

$$\% \text{ breakdown of DDT} = \frac{\text{sum of degradation peak areas (DDE + DDD) * 100 \%}}{\text{sum of all peak areas (DDT + DDE + DDD)}}$$

Benzidine and pentachlorophenol must be present at their normal responses, and no peak tailing must be visible. If degradation is excessive and/or poor chromatography is noted, the injection port may require cleaning. It may also be necessary to cut off an additional 10 to 20 cm of the capillary column.

To generate a custom report that calculates the % breakdown of DDT perform the following steps. Within the Data Review software click on Quant/QEdit Quant Result. Verify that all of the target peaks are correctly identified. Exit QEdit and click on CustRpt/Print Report. To review the report before printing click on CustRpt/Custom Reports…/ Select Edit Template DFTPP.CRT/OK. The report can be printed by clicking on the printer button or clicking on File/Print/OK.

Note: the 12 hour tune period begins at the start of the DFTPP analysis which is recorded as the data acquisition start time on the data file. The last valid calibration standard in the ICAL must have a data acquisition start time less than 12 hours from the start of the tune period.

13.2 **Initial Calibration (ICAL)**

13.2.1 Analyze 1 µL of each calibration standard and tabulate the area of the analyte against concentration for each compound. Calculate response factors (RFs) for each compound in each calibration standard as follows:

13.2.2

$$RF = \frac{A_x * C_{is}}{A_{is} * C_x}$$

where:

A_x = Area of the characteristic ion for the compound being measured.

A_{is} = Area of the characteristic ion for the specific internal standard.

C_{is} = Concentration of the specific internal standard (40 ng/µL for this method)

C_x = Concentration of the compound being measured (ng/µL = µg/mL = mg/L).

13.2.3 Calculate the average response factor ($\overline{RF}$) for each compound as follows:

$$\overline{RF} = (S\ RF_1 \text{ to } RF_n)/n$$

where: RF = RF for each of the calibration levels (i.e., 5)
n = Number of RF values (i.e., 5)

13.2.3 A system performance check must be performed to ensure that minimum average RFs are met before the calibration curve is used. For semivolatiles the System Performance Check Compounds (SPCCs) are: N-Nitroso-di-n-propylamine, Hexachlorocyclopentadiene, 2,4-

Dinitrophenol, and 4-Nitrophenol. The minimum acceptable average RF for these compounds is 0.050. If it is determined that one calibration level has an unacceptable response, that level may be reanalyzed once. If the minimum average RF is still not met, corrective action must be taken and the calibration sequence repeated. If any major changes are made to the system (e.g. column changed or detector cleaned), recalibration of the system must take place.

13.2.4 Calibration Check Compound (CCC) responses are monitored to check the integrity of the system. The CCCs are as follows:

Base/Neutral Fraction	Acid Fraction
1,4-Dichlorobenzene	Phenol
Hexachlorobutadiene	2-Nitrophenol
Acenaphthene	2,4-Dichlorophenol
N-Nitrosodiphenylamine	4-Chloro-3-methylphenol
Fluoranthene	2,4,6-Trichlorophenol
Di-n-octyl phthalate	Pentachlorophenol
Benzo(a)pyrene	

Using the RFs from the initial calibration, calculate the percent relative standard deviation (%RSD) for the Calibration Check Compounds (CCC).

To calculate %RSD: $\%RSD = 100\% \times SD/\overline{RF}$

where:

%RSD = % Relative Standard Deviation

$\overline{RF}$ = average of initial RFs for a compound
SD = standard deviation (n-1) of average RFs for a compound

To calculate Standard Deviation (n-1 degrees of freedom)

$$SD = N \sqrt{\sum_{i=1} \frac{(RF_i - \overline{RF})^2}{n-1}}$$

where: RF_i = RF for each of the 5 calibration levels
n = Number of RF values (i.e., 5)

13.2.5 If the %RSD of any CCC compound is > 30%, then the chromatographic system is too reactive for analysis to begin. Clean or replace the injector and/or capillary column, then repeat the calibration procedure beginning with section 13.2.1.

13.2.6 Linearity - If the %RSD of any compound is 15% or less, then the relative response factor is assumed to be constant over the calibration range, and the average relative response factor is used for quantitation. If the %RSD is greater than 15%, first order linear regression is used. The calibration curve must meet the requirements for curve fitting listed in SW-846 8000B and the correlation coefficient is = 0.99. The equation is not forced through the origin.

13.2.7 Retention Times: The Relative Retention Times (RRT) of each compound in each calibration standard should be within ± 0.06 RT units.

13.2.8 Before sample analysis can begin, a Initial Calibration Verification (ICV) (see Sec. 10.9) must be performed. The ICV results must be within the acceptance criteria as established for the CCV compounds (Section 13.3). Other components should be recovered within 70 to 130% of the true value. Note: Benzidine is one exception: Recovery of > 50% is acceptable for this compound.

NOTE:

1. All calibration curves must have a unique identifier. It is recommended that the calibration date be incorporated into the identifier for easy reference.
2. All initial calibration standards must be analyzed within the 12 hour DFTPP tune window.
3. Calibration must be completed (all standard levels analyzed) within 24 hours or the entire calibration sequence must be repeated. If the calibration was not completed in the first tune window it may continue into a second tune window. Standard calibration levels from either tune window can be used. An exception follows: If DFTPP criteria does not pass criteria for the second tune window and major maintenance was done to the instrument or the Mass Spectrometer tuning parameters were adjusted in order to obtain an acceptable tune for DFTPP, the entire calibration sequence must be repeated.
4. All initial calibration standards must be analyzed as a group. No field sample analyses are allowed during the calibration sequence.
5. Do not add calibration standards and update the curve after the original calibration date.
6. Multiple analyses of the same calibration level are not allowed to be included in the calibration curve.
7. Compound responses cannot be selected from different analyses of the same calibration level (i.e. all compound responses for level 1 must come from the same data file).
8. If more than five calibration levels are analyzed, it is permissible to either drop the low compound concentration (poor response) or the high compound concentration (detector saturation). It is not allowed to drop a point in the middle of the curve.
9. If more than five calibration levels are analyzed, it is permissible to drop an entire level if the analyst can document a specific reason or reasons why that level should be excluded. Mechanical failure, significant loss of all analyte responses possibly due to poor technique in standard preparation, or software malfunction during data acquisition (system did not acquire all compound data) are plausible reasons. The reason must be justified and documented. The supervisor should review this situation and approve the analyst's decision.
10. The need to analyze more than two analyses of the same calibration level indicates a potential problem with the secondary stock solution. Prepare a fresh secondary stock solution and

repeat all seven calibration levels. It is recommended that all calibration standard levels come from the same secondary stock solution.

11. Manual integration must only be used if the software fails to properly integrate the peak. If manual integration is used for a particular compound, all levels of that compound do not have to be manually integrated, but all levels must be integrated in a similar manner. Example: the computer generated integration of a compound in the low level standard is not technically sound. A manual integration of the compound is performed (due to baseline noise, etc) in order to achieve a technically sound integration. Other levels of the compound are integrated correctly by the computer. The manual integration of the low level must match, as best as possible, the computer generated integrations for all other levels.
12. If any compound in the mid-point level is manually integrated, the integration of this compound must be reviewed for every continuing calibration standard and QC check solution (i.e. LCS, and Matrix Spike) to ensure that the integration is the same as the manual integration performed in the initial calibration (ICAL) mid-point. A consistent manner of integration must be achieved.
13. All manual integrations must be reviewed and approved at the supervisory level.

13.3 Continuing Calibration Verification (CCV)

13.3.1 The mass spectrometer must pass tune criteria (see Section 13.1) every 12 hours during analysis of samples.

13.3.2 A continuing calibration verification (CCV) sample is analyzed every 12 hours during analysis of samples. Different standards are analyzed for the CCV such that a wider range of the calibration curve is verified. For example: on successive days analyze the 20 µg/mL, then the 50 µg/mL and on the third day, the 80 µg/mL standard solution. Compare the response factors, of the SPCC's and the CCC's, and the internal standards from the CCV with the following criteria.

13.3.3 The SPCC compounds must have an RF = 0.05.

13.3.4 Control limits for the CCC compounds are ± 20% difference from the ICAL Response Factor (RF) if the average RF is used for quantitation, or ± 20% drift from the true concentration of the CCV compound if linear regression is used.

13.3.5 The areas of the internal standards in the CCV must be between –50% and +100% of the respective areas of the internal standards in the ICAL mid-point calibration standard.

13.3.6 The retention times of the internal standards in the CCV must be within ± 30 seconds of the respective retention times of the internal standards in the ICAL mid-point calibration standard.

13.3.7 If the CCV results obtained are outside the acceptance criteria, corrective actions must be performed. If routine corrective actions fail to produce an acceptable second consecutive (immediate) CCV, then either the lab has to demonstrate performance after corrective action with two consecutive successful CCVs, or a new ICAL must be performed. If the instrument has not

demonstrated acceptable performance, sample analyses cannot continue until a new ICAL is established and verified with an ICV. However, sample data associated with an unacceptable CCV may be reported as qualified data under the following special conditions:

13.3.7.1 When the acceptance criteria for CCV are exceeded high, i.e., high bias, and there are associated samples that are non-detects, then those non-detects may be reported. Otherwise the samples affected by the unacceptable calibration verification must be reanalyzed after a new ICAL has been established, evaluated and accepted.

13.3.7.2 When the acceptance criteria for the CCV are exceeded low, i.e., low bias, those sample results may be reported if they exceed a maximum regulatory limit/decision level. Otherwise the samples affected by the unacceptable verification must be reanalyzed after a new ICAL is established and verified with an ICV.

13.3.7.3 When the acceptance criteria for the CCV are exceeded and it is not possible to reanalyze the sample due to limited sample quantity AND a new sample cannot be obtained by the laboratory, the data may be reported with the appropriate data qualifiers if the client has been contacted and agrees, in writing, to accept the qualified data.

13.4 Records: Initial and Continuing Calibration Records will contain, at a minimum, the following:

1) Calibration date
2) Test method
3) Instrument
4) Analysis date
5) Each analyte name
6) Analyst's initials or signature
7) Standard Concentration (appropriate units) and number of standards
8) Response (appropriate units)
9) Calibration curve or response factor
10) Evaluation of and Statistics for ICAL curve fit in order to judge calibration curve acceptance
11) Evaluation of and Acceptance Limits for ICV analysis in order to judge calibration curve acceptance
12) Evaluation of and Acceptance Limits for CCV analysis in order to judge continuing calibration acceptance

13.5 Thermometers - The thermometers in the sample refrigerators and the standards freezer must be checked daily. They must meet performance criteria.

14. PROCEDURE

14.1 Sample Preparation

14.1.1 Water, soil, sediment and waste samples must be prepared by SOP 3500 Extractions of Samples for Semi-Volatile Organic Analyses (EPA Methods 3510C, 3520C, 3550B, 3580A) prior to GC/MS analysis.

14.1.2 Extract Cleanup: Extracts may be cleaned up by any of the following methods prior to GC/MS analysis.

Compounds	**SOPs**
Semivolatile hydrocarbons	3330 Silicia Gel Clean-up for Semivolatile Organic Analyses
PCB Pesticides	3060 Florisil Clean-up for PCB's and Pesticides

14.1.3 Direct Injection: In very limited applications direct injection of the sample into the GC/MS system with a 10 µL syringe may be appropriate (see SOP 3500 for preparation). The reporting limit is very high (approximately 100 to 1000 mg/L); therefore, it is only applicable where concentrations in excess of 100 mg/L are expected.

14.1.4 Extract Preparation: Sample extracts and the Internal Standard solution should be at ambient temperature prior to use. Using a 10 µL microliter syringe, inject 10 µL of the Internal Standard solution into the 1 mL sample extract just prior to the start of the analytical batch. Ensure that there is no precipitation in the internal standard mixture. If there is precipitation then gently warm the standard until all is dissolved.

14.2 GC/MS Analysis

14.2.1 Instrument Conditions: The recommended GC/MS operating conditions:

EMV	1600 to 2500 (nominal)
Mass range:	35 to 500 amu (see Attachment 2 for ions monitored)
Scan time:	3.15 scans/sec
Initial temperature:	40°C hold for 1 minutes
Ramp 1 temperature program	15.0 °C/min
Final temperature 1:	100 °C hold for 0.0 minutes
Ramp 2 temperature program	15 °C/min
Final temperature 2:	240 °C hold for 0.0 minutes
Ramp 3 temperature program	10 °C/min
Final temperature 3:	310°C hold for 9.0 minutes
Injector temperature:	250°C
Source temperature:	310 °C
Sample volume:	1 µL
Carrier gas:	Helium at 44 cm/sec
Split flow:	Splitless
Flow Ramp	
Initial Flow	1.2 mL/min hold for 0.0 minutes
Ramp 1 Fow program	99 ml/min^2

Final Flow 1:	2.0 mL/min hold for 3.5 minutes
Ramp 2 Flow program	10 ml/min^2
Final Flow 2:	1.2 ml/min hold for 0.0 minutes

14.2.2 Access the computer and create a batch sequence file. Refer to section 14.3 for instructions.

14.2.3 Using the autosampler, inject 1 µL of the Tuning Standard (DFTPP) and evaluate using tune acceptance criteria. See Section 13.1

14.2.4 Inject 1 µL of the Continuing Calibration Verification Standard (CCV) and evaluate using CCV acceptance criteria. See Section 13.3.

14.2.5 If all criteria are met, continue with sample analysis, injecting 1 µL of each extract, as outlined below.

14.2.6 If the response for any quantitation ion exceeds the initial calibration curve range of the GC/MS system, extract dilution is an option. If extract dilution is required, additional internal standard must be added to the diluted extract to maintain the required 40 ng/µL of each internal standard in the extracted volume. Then the diluted extract is analyzed.

DILUTION PROCEDURE

1. Clean a 1ml syringe equipped with a luer lock needle with rinse and clean solvent. (dichloromethane or hexane) Fill syringe with clean solvent such that there is sufficient volume remaining for the dilution volume (see Table 4) and remove the needle. Place the needle on the counter top such that the tip of the syringe is elevated.

2. Clean an appropriate syringe (see Table 4) with rinse and clean solvent. Expel excess solvent by pumping plunger several times. Puncture the sample vial with the syringe needle and withdraw the sample into the syringe.

3. Remove the syringe from the sample vial and insert the needle into the barrel of the 1ml syringe. Inject the sample into the clean solvent. Hold the 1ml syringe so that the tip is up and gently push up on the plunger to remove excess air from the barrel.

4. Replace the needle on the 1ml syringe and add sufficient clean solvent to a final volume of 1ml. Transfer the entire contents of the syringe into a labeled sample vial. Add an appropriate amount of internal standard (see Table 4) if necessary. Cap vial.

Table 4 STANDARD DILUTIONS

Dilution	Sample Volume µL	Total Volume µL	Amount of Internal Standard

			added µL
1:5	200	1000	8.0
1:10	100	1000	9.0
1:20	50	1000	9.5
1:50	20	1000	9.8
1:100	10	1000	9.9

14.2.7 Perform all qualitative and quantitative measurements as described in Sections 14.4 and 14.5. After analysis, store the extracts in the dark at 0.1- 6°C.

14.3 Analytical Sequence

START CHEMSTATION SOFTWARE:

From NT Desktop: Start/Programs/MSD ChemStation/Instrument #1/Instrument #1

The software will locate the instrument and all peripheral equipment. Once the software is fully loaded there will be two windows visible. Window one is the instrument control window. Instrument parameters are readily viewed from this window. The second window is the sequence control window. No instrument parameters are viewable from this window.

SEQUENCE SETUP

From menu: Sequence/Run

1. Set current date in Data File Directory space (ie., C:\MSDCHEM\1\DATA\060702\)
2. OK (to save changes)

From menu: Sequence/Edit Sample Log Table

1. Set data file name using current date using the following format MMDDYY## (ie., 06070201)
2. Set up sequence order using the following format: (**NOTE:** Tune and CCV must always run first)

VIAL	METHOD	SAMPLE NAME
1	DFTPP	TUNE STUNE001
2	SVOC0610	CCV SSTD050-1
3	SVOC0610	MBLK MB-1234-SVOC
4	SVOC0610	LCS LCS-1234-SVOC
5	SVOC0610	SAMP 0206001-001A
…	…	…
18	SVOC0610	SAMP 0206001-010A
1	DFTPP	TUNE STUNE002
2	SVOC0610	CCV SSTD050-2

19	SVOC0610	SAMP 0206001-011A

NOTE: The number of samples, including tune and CCV that can be analyzed within the 12 hour window varies with each analysis. Use this list as a guide but always check that the samples were analyzed within 12 hours of the DFTPP injection.

SVOC = 18 total samples
PNA(SIM) = 21 total samples
PCB/PEST = 20 total samples

3. OK (to save changes)

From menu: Method/Set New Default Paths

1. Update the method and data file paths using the current date (ie., C:\MSDCHEM\1\DATA\060702\)
2. OK (to save changes)

Use Windows Explorer to copy all of the method files from the previous day's folder into the current day's folder.

TO START SEQUENCE:

From menu: Sequence/Run/Run Sequence

Start of the 12 hour sequence (as documented as the date/time stamp on the data file for the Tune Standard):

The analytical sequence for Initial Calibration is:

DFTPP (Tune Standard)
Calibration standard (S1)
Calibration standard (S2)
Calibration standard (S3)
Calibration standard (S4)
Calibration standard (S5)
Calibration standard (S6) optional
Calibration standard (S7) optional
Initial Calibration Verification Standard (ICV)

The analytical sequence for Sample Analysis is:

DFTPP

Continuing Calibration Verification Standard (CCV)
Method Blank (MB)
LCS
LCS Duplicate (if applicable)
Sample #1
Sample #1 Matrix Spike (MS)
Sample #1 Matrix Spike Duplicate (MSD)
Sample #1 Laboratory Duplicate (if applicable)
Samples #2, #3, etc. until the end of 12 hour tune period

DFTPP
CCV
Samples up to #20
Method Blank (MB) #2
LCS #2
LCSD #2 (if applicable)
Sample #21
Sample #21 Matrix Spike (MS)
Sample #21 Matrix Spike Duplicate (MSD)
Sample #21 Laboratory Duplicate (if applicable)
Samples #22, #23, etc. until the end of 12 hour tune period

14.4 Data Interpretation - Qualitative Analysis

14.4.1 An analyte is identified based upon Relative Retention Time (RRT) and by comparison of the sample mass ions with the mass ions of a standard of the suspected compound (standard reference ions). The reference mass ion ratio must be generated by the laboratory using the conditions of this method. The characteristic ions from the reference mass ion are defined to be the two or three ions of greatest relative intensity. See Attachment 2 for the ions to be monitored. Two criteria must be satisfied to verify identification:
(1) elution of sample component at the same GC relative retention time (RRT) as those of the standard component; and (2) correspondence of the sample component and the standard component mass ions. Intensities of the characteristic ions must maximize in the same scan or within one scan of each other.

14.4.2 The RRT of the sample component is within ± 0.06 RRT units of the RRT of the standard component.

14.4.3 The relative intensities of the characteristic ions must agree within 30% of the relative intensities of these ions in the reference spectrum. (example: For an ion abundance of 50% in the reference, the corresponding abundance in a sample spectrum can range between 20% and 80%.)

14.4.4 Structural isomers that produce very similar mass spectra must be identified as individual isomers if they have sufficiently different GC retention times. Sufficient GC resolution is achieved if the height of the valley between two isomer peaks is less than 25% of the sum of the two peak heights. Otherwise, structural isomers are identified as isomeric pairs. An exception to this guidance occurs for the compounds Benzo(b)fluoranthene and Benzo(k)fluoranthene. Although the GC resolution may be minimal between the two, they are routinely reported as individual compounds. The Manual Integration SOP 1255 is used for guidance in the integration of these two peaks and for other situations that may require analyst efforts to correct computer generated integrations that are not technically sound.

14.4.5 Identification is hampered when sample components are not resolved chromatographically or coelute and produce mass spectra containing ions contributed by more than one analyte. When gas chromatographic peaks obviously represent more than one sample component (i.e., a broadened peak with shoulder(s) or a valley between two or more maxima), appropriate selection of analyte spectra and background spectra is important. Examination of extracted ion current profiles of appropriate ions can aid in the selection of spectra, and in qualitative identification of compounds, but each analyte spectrum will contain extraneous ions contributed by the coeluting compound.

14.4.6 For samples containing components not associated with the calibration standards, a library search may be made for the purpose of tentative identification. The necessity to perform this type of identification will be determined by the purpose of the analyses being conducted. Computer generated library search routines must not use normalization routines that would misrepresent the library or unknown spectra when compared to each other. For example, the RCRA permit or waste delisting requirements may require the reporting of nontarget analytes. Only after visual comparison of sample spectra with the nearest library searches will the mass spectral interpretation specialist assign a tentative identification. Guidelines for making tentative identification are:

14.4.6.1 Relative intensities of major ions in the reference spectrum (ions >10% of the most abundant ion) must be present in the sample spectrum.

14.4.6.2 The relative intensities of the major ions must agree within ± 20%. (Example: For an ion with an abundance of 50% in the standard spectrum, the corresponding sample ion abundance must be between 30 and 70%).

14.4.6.3 Molecular ions present in the reference spectrum must be present in the sample spectrum.

14.4.6.4 Ions present in the sample spectrum but not in the reference spectrum must be reviewed for possible background contamination or presence of coeluting compounds.

14.4.6.5 Ions present in the reference spectrum but not in the sample spectrum must be reviewed for possible subtraction from the sample spectrum because of background contamination or coeluting peaks. Data system library reduction programs can sometimes create these discrepancies.

14.5 Data Interpretation - Quantitative Analysis

14.5.1 Once a compound has been identified, the quantitation of that compound must be based on the integrated abundance from the EICP of the primary characteristic ion. The internal standard used shall be the one nearest the retention time of that of a given analyte.

14.5.2 If the RSD of a compound's response factor is 15% or less, then the concentration in the extract is determined using the average response factor (RF) from initial calibration data (13.2). See Method 8000, Sec. 7.0, for the equations describing internal standard calibration and either linear or non-linear calibrations.

14.5.3 Where applicable or required, the concentration of any non-target analytes (TICs) identified in the sample are estimated. The same formulae must be used with the following modifications: The areas A_x and A_{is} must be from the total ion chromatograms, and the RF for the compound must be assumed to be 1. The resulting concentration must be reported indicating: (1) that the value is an estimate, and (2) which internal standard was used to determine concentration. Use the nearest internal standard free of interferences.

14.6 Record the following information in the appropriate logbook or data file. Include any deviations from this procedure. Analyst initials, date of analysis, sample number or ID, initial sample volume or weight processed, final extract volume, calibration standard sample or solution identifier, QC sample or solution identifier, surrogate solution identifier, internal standard solution identifier, any dilution information, readings from support equipment, data file name, instrument method name, visual observations, and any other information as deemed necessary.

14.7 Troubleshooting

The experience of the analyst performing GC/MS analyses is invaluable to the success of the methods. Each day that the analysis is performed, the daily calibration standard (CCV) must be evaluated to determine if the chromatographic system is operating properly. Questions that must be asked: Do the peaks look normal? Is the response obtained comparable to the response from previous calibrations? Careful examination of the standard chromatogram can indicate whether the column is still good the injector is leaking, the injector septum needs replacing, etc. If any major changes are made to the system (e.g. column changed or detector cleaned), recalibration of the system must take place.

14.8 Routine Maintenance - Record all maintenance

14.8.1 Daily, or as needed according to sample throughput, change the septum and or the injection port liner. Trim a short section from the analytical column as necessary. Alternatively, the use of a guard column helps to protect the analytical column from residue buildup. A short section, 10 to 20 cm, of the guard column may be trimmed as to improve column performance.

14.8.2 Clean the source on an as needed basis (loss of sensitivity).

14.8.3 Inspect the autosampler syringe for wear; replace as necessary.

14.8.4 Check the carrier gas supply; replace as necessary.

15. DATA REDUCTIONS, CALCULATIONS, AND LOADING

15.1 The data system performs the calculations.

15.1.1 If the %RSD of a compound's relative response factor is 15% or less, then the concentration in the extract may be determined using the average response factor (RF) from the initial calibration data (13.2) and the following equation:

$$C_{ex}(mg/L) = \frac{A_x \times C_{is}}{A_{is} \times RF}$$

where C_{ex} is the concentration of the compound in the extract, and the other terms are defined in Sec. 13.2.

15.1.2 Alternatively, linear regression (Sec. 13.2) may be used for determination of the extract concentration.

15.2 Compute the concentration of the analyte in the sample using the equations in Secs. 15.2.1 and 15.2.2.

15.2.1 The concentration of the analyte in the liquid samples is calculated using the concentration of the analyte in the extract and the volume of liquid extracted, as follows:

$$\text{Concentration in liquid (mg/L)} = \frac{C_{ex} * V_f}{V_i}$$

or

$$\text{Concentration in liquid (µg/L)} = \frac{C_{ex} * V_f * 1000}{V_i}$$

where:

V_f = final extract volume in mL (includes any dilution volumes)
V_i = initial volume of liquid extracted, in mL.

15.2.2 The concentration of the analyte in the solid sample is calculated using the concentration of the analyte in the extract and the weight of the solid extracted, as follows:

$$\text{Concentration in solid (mg/Kg)} = \frac{C_{ex} * V_f}{}$$

W_i

or

$$\text{Concentration in solid } (\mu g/Kg) = \frac{C_{ex} * V_f * 1000}{W_i}$$

where:

V_f = final extract volume in mL (includes any dilution volumes)
W_i = initial sample weight, in g.

For soil samples reported on dry weight basis, divide the Concentration by the decimal equivalent of the Percent Solids. For example: a sample contains 90% solids, thus

$$\text{Concentration in solid (mg/Kg) dry weight} = \frac{C_{ex} * V_f}{W_i * 0.90}$$

16. METHOD PERFORMANCE

Demonstration of Capability (DOC)

All parameters of interest must meet the method acceptance criteria before actual sample analysis begins. See SOP 1230 Training for the procedure to perform and document the DOC. The DOCs for the analysts performing this method are located in the analysts' training form folders located in the QA office files.

A quality control (QC) reference concentrate is required containing each analyte at a concentration of 50 µg/mL in acetone. The QC reference sample used is the Semivolatiles ICV (refer to Section 10.9 for composition). The QC reference sample is made using stock standards prepared independently from those used for calibration.

For each analyte calculate the mean recovery (x) and standard deviation (s) and the average % Recovery (%R). Compare X and s and %R with the corresponding acceptance criteria for accuracy and precision, respectively. Note: x must be within 15 and 75 µg/mL and s must be less than 25 µg/L and %R must be within 30 TO 150%**.** If x and s and %R for all analytes meet the acceptance criteria, the system performance is acceptable and analysis of actual samples can begin. If any individual x or %R falls outside the range for accuracy or any individual s exceeds the precision limit, then the system performance is unacceptable for that analyte and corrective action must be taken.

Locate and correct the source of the problem and repeat the test only for those analytes that failed to meet criteria. Repeated failure, however, will confirm a general problem with the measurement system. If this occurs, locate and correct the source of the problem and repeat the test for all compounds of interest.

Comparison to Reference Method Data

EPA Method 8000B provides guidance for the establishment of control limits for the LCS and MS QC samples. Recovery limits of 70% to 130% are provided as initial benchmarks for performance (8000B Section 8.5.4). These limits are designed for a wide variety of organic test methods. Individual analyte performance may vary. The control limits stated in Section 18 of this SOP are referenced from the CLP Statement of Work (SOW) for Organic Analyses Revision OLM04.2 May 1999 and in-house recovery data.

In-House Control Limits

Method performance data is on file in the laboratory QC department. Comparison of method performance data for the laboratory to the reference method criteria occurs when laboratory in-house acceptance limits are generated. In-house generated data is compared to the specifications of the reference method. If the in-house limits are within the specifications of the reference method, the control limits are updated in LIMS. If the in-house limits are not within specifications, an investigation is performed to determine the cause(s) of the problem and a corrective action is completed. The analysis may continue until enough data points are collected to regenerate new control limits. Any QC data generated outside of reference method limits during that time frame is flagged.

The laboratory maintains performance records to document the quality of data that is generated. Method accuracy for samples is assessed and records maintained. After the analysis of 20 laboratory control samples and surrogates, calculate the average percent recovery (R) and the standard deviation of the percent recovery (S).

Control limits for the method parameters are generated by the QC staff and distributed to the analysts via updates to the LIMS control charts. The control limits are calculated based on in-house performance data. At a minimum, these limits are updated annually.

17. POLLUTION PREVENTION

The preparation of excessive volumes of laboratory reagents and standards shall be avoided so that waste and potential for pollution are minimized. Samples, reagents and standards shall be disposed in compliance with the lab waste disposal program, SOP 1130 Waste Disposal. With the consent of the client, the samples may be returned to their origin for treatment.

Uncontaminated paper waste, glass and cans should be separated for recycling. Laboratory staff are required to protect the laboratory's and our clients' business information when disposing recycled paper or waste from the facility.

18. DATA ASSESSMENT AND CRITERIA FOR QUALITY CONTROL MEASURES

Data assessment includes review of: proper sample condition, preservation, and storage; analysis within holding time limitations; deviations from the SOP, evaluation of performance based or in-house control limits, reference method limits or project specific limits.

The laboratory must maintain records to document the quality of data that is generated. Ongoing data quality checks are compared with established performance criteria to determine if the results of analyses meet the performance characteristics of the method. When results of sample spikes indicate atypical method performance, a calibration verification standard is used to confirm the measurements were performed in an in-control mode of operation. The data review is conducted according to SOP 1250 Data Review.

18.1 Blanks

If the blank exceeds the RL (usually the lowest calibration standard or specifically defined in this test method SOP), the source of contamination must be investigated and corrective actions taken. The compound concentrations in the method blank of an extraction batch must be less than the RL's listed in Attachment 1, except for common laboratory contaminants, i.e. bis-2-ethylhexyl phthalate which must be less than 5 times the RL listed in Attachment 1. If this criteria is exceeded, re-analyze the method blank. If after re-analysis, the blank criteria is still exceeded, then the entire extraction batch must be re-extracted. Always refer to a client specific QAPP for additional guidance.

If the surrogate recovery is outside the QA limits as defined in this test method the source of the nonconformance must be investigated and corrective actions taken. If this criteria is exceeded, re-analyze the method blank. If after re-analysis, the blank criteria is still exceeded, then the entire extraction batch must be re-extracted. Always refer to a client specific QAPP for additional guidance.

Affected samples must be reprocessed and reanalyzed or Data must be appropriately qualified if:

1) The concentration of a targeted analyte in the blank is at or above the reporting limit as established by the SOP or by regulation, AND is greater than 1/10 of the amount measured in any sample.

2) The blank contamination otherwise affects the sample results as per the test method requirements or the individual project data quality objectives.

18.2 Laboratory Control Samples (LCS)

The results of the individual batch LCS are calculated in percent recovery (%R) and compared to established acceptance criteria from in house analyses. If the LCS is outside the acceptance criteria, see Table 5 for current acceptance criteria, the analytical system is "out of control." Any affected samples associated with an out of control LCS must be reprocessed and reanalyzed or the results reported with appropriate data qualifiers. If after re-analysis the control criteria has not been met, the entire extraction batch must be re-extracted. Always refer to a client specific QAPP for additional guidance.

Table 5 LCS

Compound	Soil % Recovery	Water % Recovery
Phenol	46 – 78	12 – 101
2-Chlorophenol	51 – 82	30 – 97
1,4-Dichlorobenzene	49 – 81	27 – 99
N-Nitrosodi-n-propylamine	46 – 106	36 – 104
1,2,4-Trichlorobenzene	51 – 85	31 – 101
4-Chloro-3-methylphenol	54 – 101	43 – 113
Acenaphthene	58 – 106	43 – 122
4-Nitrophenol	52 – 114	10 – 129
2,4-Dinitrotoluene	52 – 116	10 – 123
Pentachlorophenol	50 – 111	50 – 113
Pyrene	42 – 136	54 – 131

18.3 Surrogates

18.3.1 The results of the individual Surrogate compounds are calculated in percent recovery (%R) and are compared to established acceptance criteria from the CLP Statement of Work (SOW) for Organic Analyses Revision OLM04.2 May 1999. Surrogates outside the acceptance criteria, see Table 6 for current acceptance criteria, must be evaluated for the effect indicated for the individual sample results.

Table 6 Surrogates

Surrogate Compound	Soil % Recovery	Water % Recovery
Nitrobenzene-d_5	51-104	35-114
2-Fluorobiphenyl	54-105	43-116
Terphenyl-d_{14}	62-110	33-141
Phenol-d_5	48-115	10-110
2-Fluorphenol	54-109	21-110
2,4,6-Tribromophenol	55-115	10-123
1,2-Dichlorobenzene-d_4	31-121	16-110
2-Chlorophenol-d_4	34-123	33-110

If surrogate recoveries are not within the established acceptance criteria, proceed as follows (SW-846 8000B):

1) Check to be sure that there are no errors in the calculations, surrogate solutions or internal standards. If errors are found, recalculate the data accordingly. Examine chromatograms for interfering peaks and integrated peak areas.

2) Check instrument performance. If an instrument performance problem is identified, correct the problem and re-analyze the extract (or re-analyze the sample for volatiles).

3) Some samples may require dilution in order to bring one or more target analytes within the calibration range or to overcome significant interferences with some analytes. This may result in the dilution of the surrogate responses to the point that the recoveries cannot be measured. If the surrogate recoveries are available from a less diluted or undiluted aliquot of the sample or sample extract, those recoveries may be used to demonstrate that the surrogates were within the QC limits, and no further action is required. However, the results of both the diluted and undiluted (or less-diluted) analyses should be provided to the data user.

4) If no instrument problem is found and if sufficient sample is available, the sample should be re-extracted and re-analyzed.

18.3.2 If, upon re-analysis (in either 2 or 4 above), the recovery is again not within limits, report the data as an "estimated concentration." If the recovery is within the limits in the re-analysis, provide the re-analysis data to the data user. If the holding time for the method has expired prior to the re-analysis, provide both the original and reanalysis results to the data user, and note the holding time problem.

18.4 Duplicates

The results from laboratory duplicates are designed to assess the precision of analytical results in a given matrix and are expressed as relative percent difference (RPD). See the STAT Quality Assurance

Manual, Section 5.4 for the calculation for RPD. Results are compared to established acceptance criteria as listed in the MS/MSD Tables 7 and 8. For duplicates results outside established criteria, corrective action must be documented or the data reported with appropriate data qualifying codes.

For this test method, the analysis of the MS/MSD pair is used for determination of method precision. For cases where the sample cannot be divided (e.g., wipes, air samples, not enough sample provided by customer) and thus a MS/MSD pair is cannot be prepared in the preparation batch, an LCS/LCSD pair is prepared and analyzed to measure precision. Precision data from Tables 7 and 8 will be used for RPD acceptance criteria for LCS/LCSD.

18.5 Matrix Spikes

18.5.1 The results from MS/MSD are primarily designed to assess the precision and accuracy of analytical results in a given matrix and are expressed as percent recovery (%R) and relative percent difference (RPD). See the STAT Quality Assurance Manual, Section 5.4 for the calculation for RPD. Results are compared to established acceptance criteria from the CLP Statement of Work (SOW) for Organic Analyses Revision OLM04.2 May 1999. For matrix spike results outside established criteria corrective action must be documented or the data reported with appropriate data qualifying codes.

18.5.2 Tables 7 and 8 show the compounds spiked, the levels and the current QC criteria for soils and water samples.

Table 7 Matrix Spike - Soil

Compound	Amount added µg/Kg	RPD Limit	% Recovery
Phenol	3330	35	46 – 78
2-Chlorophenol	3330	50	51 – 82
1,4-Dichlorobenzene	1670	27	49 – 81
N-Nitrosodi-n-propylamine	1670	38	46 – 106
1,2,4-Trichlorobenzene	1670	23	51 – 85
4-Chloro-3-methylphenol	3330	33	54 – 101
Acenaphthene	1670	19	58 – 106
4-Nitrophenol	3330	50	52 – 114
2,4-Dinitrotoluene	1670	47	52 – 116
Pentachlorophenol	3330	47	50 – 111
Pyrene	1670	36	42 – 136

Table 8 Matrix Spike - Water

Compound	Amount added µg/L	RPD Limit	% Recovery
Phenol	200	42	12 – 101
2-Chlorophenol	200	40	30 – 97
1,4-Dichlorobenzene	100	28	27 – 99
N-Nitrosodi-n-propylamine	100	38	36 – 104
1,2,4-Trichlorobenzene	100	28	31 – 101
4-Chloro-3-methylphenol	200	42	43 – 113
Acenaphthene	100	31	43 – 122
4-Nitrophenol	200	50	10 – 129
2,4-Dinitrotoluene	100	38	10 – 123
Pentachlorophenol	200	50	50 – 113
Pyrene	100	31	54 – 131

18.6 Internal Standards

The results of the individual Internal Standard compounds on all samples, blanks, and spikes are calculated in percent recovery (%R) and are compared to established acceptance criteria. If the Internal Standard recovery is outside the acceptance criteria, see Table 9, corrective action should be taken. Note: the recovery of internal standards in these samples within the stated limits is not mandatory per the reference method, 8270C. It can be a useful diagnostic tool. Client specific project criteria may require the adherence to these limits. If so, then corrective action must be documented or the data reported with appropriate data qualifying codes.

Table 9 Internal Standards

INTERNAL STD COMPOUND	CRITERIA (%)
Acenaphthene-d_{10}	-50 to +100
Chrysene-d_{12}	-50 to +100
1,4-Dichlorobenzene-d_4	-50 to +100
Naphthalene-d_8	-50 to +100
Perylene-d_{12}	-50 to +100
Phenathrene-d_{10}	-50 to +100

18.7 Other

The laboratory will analyze standard reference materials and participate in relevant performance evaluation studies quarterly.

19 CORRECTIVE ACTIONS FOR OUT-OF-CONTROL DATA

The process for handling unacceptable and out of control data is found in SOP 230 Corrective Action.

If the CCV, MB, LCS/LCSD, MS/MSD, lab duplicate, surrogate, internal standard, or recovery of any parameter falls outside the designated acceptance range, the laboratory performance for that parameter is judged to be out of control, and the problem must be immediately identified and corrected. The analytical result for that parameter in the samples is suspect and is only reported for regulatory compliance purposes with the appropriate corrective action form. Immediate corrective action includes reanalyzing all affected samples by using any retained sample before the expiration of the holding time. Final data results must be qualified in the client report for reported results not meeting the laboratory defined criteria.

1) Review standards preparation logbooks. Check all calculations and ensure dilution factors are properly recorded.
2) Re-prepare the suspected standard or QC sample to identify possible preparation errors of the standard or QC sample.
3) Re-Analyze the samples when the CCV or LCS is not within acceptable limits.
4) Perform routine preventative maintenance following manufacturer's specification. Record all maintenance in the instrument logbook.

20 CONTINGENCIES FOR HANDLING OUT-OF-CONTROL OR UNACCEPTABLE DATA

Every effort is made to prevent problems from occurring. When out of control or unacceptable data occurs the first option is to identify the problem and reanalyze the samples within the holding times. When this is not possible, the QA Manager and/or the Laboratory Director reviews data and discusses options with the client. Reanalysis or reporting the data with qualification are alternatives. Out of control or unacceptable data reported to the client must include the data qualifier, flag and discussion on the rationale for reporting.

Holding time exceedence, improper preservation and improper sample condition or storage are noted on the corrective action form and included on the final report.

Review the CCV standard response, LCS result, the surrogate recovery, and internal standard recovery for acceptable performance for each batch of samples. Record any trends or unusual performance on a corrective action form. Final data results must be qualified in the client report for results not meeting the laboratory defined criteria.

Manual integration must be minimized for standards, reagent blanks and surrogates. Routine manual integration of the same parameters indicates a system performance problem. Correct this problem or note in the instrument analysis logbook the suspected causes for routine manual integration. Sign and date all manually integrated chromatograms.

20.1 The process for handling unacceptable and out of control data is found in the Laboratory QAM Section 11. The reporting of data that is out of control must be approved and documented by Quality Assurance Manager and either the Technical Manager or the Laboratory Director.

20.2 Client Requested Modifications:

20.2.1 Clients must request modifications from the laboratory SOP in writing to the lab.

20.2.2 The lab director, technical manager and quality assurance manager will evaluate the requested client deviations, determine the feasibly of the deviation and the potential effects on the data.

20.2.3 If it is determined that the lab will perform the requested deviations, lab director, technical manager and quality assurance manager will decide if a method validation study is required.

20.2.4 The designated project manager will retain all documentation concerning the requested deviation, including all correspondence with the client, in the client folder.

20.2.5 The final analytical report must include the statement "This report has analyses performed using client requested modifications ".

21 WASTE MANAGEMENT

The STAT Analysis Corporation Waste Disposal SOP 1130 identifies proper waste management practices for the chemicals and biological materials used in this procedure. Samples are stored and discarded accordance with SOP 1130 Waste Disposal.

22 REFERENCES

22.1 Method 8270C, Revision 3, December 1996; U.S. EPA SW-846 "Test Methods for Evaluating Solid Waste, Physical/Chemical Methods" Update III, December 1996.
22.2 STAT SOP for sample prep: 3500
22.3 STAT Extract Cleanup SOPs: 3060, 3330
22.4 STAT SOPs: 1210 Method Detection Limits
22.5 SOP 230 Corrective Actions
22.6 SOP 1010 Standard and Reagent Preparation
22.7 SOP 1400 LIMSa
22.8 SOP 1130 Waste Disposal
22.9 SOP 003 Chemical Hygiene Plan
22.10 SOP 1250 Data Review
22.11 Manufacturers' Equipment Instruction Manuals
22.12 SOP 1255 Manual Integration
22.13 SW-846 8000B Determinative Chromatographic Separations
22.14 SOP 1230 Training

22.15 "USEPA Contract Laboratory Program Statement of Work for Organic Analysis" Revision OLM04.2 May 1999, U. S. Environmental Protection Agency. Office of Solid Waste, Washington DC 20460.

22.16 NIST Library of Reference Spectra, Edition Number NIST98

23 FORMS, FIGURES, TABLES, DIAGRAMS, FLOWCHARTS, ATTACHMENTS OR VALIDATION DATA

MDLs and REPORTING LIMITS FOR SEMIVOLATILE COMPOUNDS (Attachment 1)

CASN	Compounds	MDL (µg/L)	RL (µg/L)	RL (mg/L)	MDL (µg/Kg)	RL (µg/Kg)	RL (mg/Kg)
83-32-9	Acenaphthene	2.8	10	0.010	124	330	0.33
208-96-8	Acenaphthylene	2.7	10	0.010	123	330	0.33
62-53-3	Aniline	2.0	10	0.010	134	330	0.33
120-12-7	Anthracene	4.0	10	0.010	113	330	0.33
65-85-0	Benzoic acid	12.4	50	0.050	169	1700	1.7
56-55-3	Benzo(a)anthracene	3.9	10	0.010	110	330	0.33
205-99-2	Benzo(b)fluoranthene	3.3	10	0.010	159	330	0.33
207-08-9	Benzo(k)fluoranthene	3.8	10	0.010	102	330	0.33
191-24-2	Benzo(g,h,i)perylene	3.3	10	0.010	137	330	0.33
50-32-8	Benzo(a)pyrene	4.1	10	0.010	120	330	0.33
100-51-6	Benzyl alcohol	1.8	10	0.010	152	330	0.33
111-91-1	Bis(2-chloroethoxy)methane	2.0	10	0.010	116	330	0.33
111-44-4	Bis(2-chloroethyl) ether	1.6	10	0.010	147	330	0.33
108-60-1	2,2'-oxybis(1-Chloropropane)	1.9	10	0.010	119	330	0.33
117-81-7	Bis(2-ethylhexyl)phthalate	3.2	10	0.010	112	330	0.33
101-55-3	4-Bromophenyl phenyl ether	3.8	10	0.010	140	330	0.33
85-68-7	Butyl benzyl phthalate	3.8	10	0.010	106	330	0.33
106-47-8	4-Chloroaniline	2.5	10	0.010	118	330	0.33
59-50-7	4-Chloro-3-methylphenol	3.5	10	0.010	123	330	0.33
91-58-7	2-Chloronaphthalene	2.5	10	0.010	125	330	0.33
95-57-8	2-Chlorophenol	2.0	10	0.010	98	330	0.33
7005-72-3	4-Chlorophenyl phenyl ether	3.2	10	0.010	124	330	0.33
218-01-9	Chrysene	3.9	10	0.010	117	330	0.33
53-70-3	Dibenz(a,h)anthracene	3.2	10	0.010	281	330	0.33
132-64-9	Dibenzofuran	2.9	10	0.010	115	330	0.33
84-74-2	Di-n-butyl phthalate	5.4	10	0.010	116	330	0.33
95-50-1	1,2-Dichlorobenzene	1.8	10	0.010	98	330	0.33
541-73-1	1,3-Dichlorobenzene	1.8	10	0.010	127	330	0.33
106-46-7	1,4-Dichlorobenzene	1.8	10	0.010	107	330	0.33
91-94-1	3,3'-Dichlorobenzidine	4.6	20	0.020	231	660	0.66
120-83-2	2,4-Dichlorophenol	2.1	10	0.010	124	330	0.33
84-66-2	Diethyl phthalate	3.7	10	0.010	119	330	0.33
131-11-3	Dimethyl phthalate	3.7	10	0.010	154	330	0.33
534-52-1	4,6-Dinitro-2-methylphenol	3.5	50	0.050	121	1700	1.7
51-28-5	2,4-Dinitrophenol	10.5	50	0.050	86	1700	1.7

121-14-2	2,4-Dinitrotoluene	3.2	10	0.010	133	330	0.33
606-20-2	2,6-Dinitrotoluene	3.4	10	0.010	127	330	0.33
117-84-0	Di-n-octyl phthalate	3.1	10	0.010	100	330	0.33
206-44-0	Fluoranthene	4.1	10	0.010	114	330	0.33
86-73-7	Fluorene	3.0	10	0.010	129	330	0.33
118-74-1	Hexachlorobenzene	3.8	10	0.010	102	330	0.33
87-68-3	Hexachlorobutadiene	2.3	10	0.010	121	330	0.33
77-47-4	Hexachlorocyclopentadiene	1.8	10	0.010	90	330	0.33
CASN	**Compounds**	**MDL (µg/L)**	**RL (µg/L)**	**RL (mg/L)**	**MDL (µg/Kg)**	**RL (µg/Kg)**	**RL (mg/Kg)**
67-72-1	Hexachloroethane	1.7	10	0.010	88	330	0.33
193-39-5	Indeno(1,2,3-cd)pyrene	3.1	10	0.010	270	330	0.33
95-48-7	2-Methylphenol	2.0	10	0.010	115	330	0.33
108-39-4	3-Methylphenol	1.9	10	0.010	107	330	0.33
106-44-5	4-Methylphenol	1.9	10	0.010	107	330	0.33
91-20-3	Naphthalene	2.2	10	0.010	110	330	0.33
88-74-4	2-Nitroaniline	3.4	10	0.010	117	330	0.33
99-09-2	3-Nitroaniline	3.6	10	0.010	152	330	0.33
100-01-6	4-Nitroaniline	3.7	10	0.010	134	330	0.33
98-95-3	Nitrobenzene	1.7	10	0.010	111	330	0.33
88-75-5	2-Nitrophenol	2.2	10	0.010	85	330	0.33
100-02-7	4-Nitrophenol	10.9	50	0.050	117	1700	1.7
62-75-9	N-Nitrosodimethylamine	1.2	10	0.010	151	330	0.33
86-30-6	N-Nitrosodiphenylamine	3.5	10	0.010	117	330	0.33
621-64-7	N-Nitrsosdi-n-propylamine	2.2	10	0.010	125	330	0.33
87-86-5	Pentachlorophenol	4.1	50	0.050	110	1700	1.7
85-01-8	Phenanthrene	3.9	10	0.010	125	330	0.33
108-95-2	Phenol	1.0	10	0.010	131	330	0.33
129-00-0	Pyrene	4.1	10	0.010	114	330	0.33
110-86-1	Pyridine	1.5	10	0.010	151	330	0.33
120-82-1	1,2,4-Trichlorobenzene	2.0	10	0.010	121	330	0.33
95-95-4	2,4,5-Trichlorophenol	3.2	10	0.010	118	330	0.33
88-06-2	2,4,6-Trichlorophenol	3.2	10	0.010	120	330	0.33

Attachment 2: CHARACTERISTIC IONS FOR SEMIVOLATILE COMPOUNDS

#	Compounds	Retention Time (min.)	Primary Ion	Secondary Ion(s)
1	1,4-Dichlorobenzene-d4 (ISTD)	8.63	152	150, 154
2	N-Nitrosodimethylamine	2.69	74	79, 42
3	Pyridine	2.58	79	51, 52
4	2-Fluorophenol (SURR)	5.29	112	64, 92
5	Phenol-d5 (SURR)	8.35	99	71, 42
6	Phenol (MS)	8.40	94	65, 66
7	Aniline	7.84	66	65, 39
8	bis-(2-Chloroethyl)ether	8.17	63	65
9	2-Chlorophenol (MS)	8.22	128	64, 130, 132
10	1,3-Dichlorobenzene	8.48	146	148, 75, 111
11	1,4-Dichlorobenzene (MS)	8.69	146	148, 111
12	Benzyl Alcohol	9.60	108	107, 79
13	1,2-Dichlorobenzene-d4 (SURR)	9.28	152	154, 115
14	2-Chlorophenol-d4 (SURR)	8.13	132	134
15	1,2-Dichlorobenzene	9.33	146	148, 111
16	2-Methylphenol	10.37	107	108, 79
17	2,2'-oxybis(1-Chloropropane)	10.10	45	41, 121
18	3- & 4-Methylphenol	11.06	107	108, 77
19	N-Nitrosodi-n-propylamine (MS)	10.74	70	43, 42
20	Hexachloroethane	10.38	117	119, 121
21	Nitrobenzene-d5 (SURR)	10.90	82	128, 54
22	Nitrobenzene	10.97	77	123, 51
23	Isophorone	12.01	82	138, 95
24	2-Nitrophenol	12.24	139	109, 65
25	2,4-Dimethylphenol	13.03	122	107, 121
26	Benzoic acid	14.49	122	105, 77
27	bis(2-Chloroethoxy)methane	13.23	93	63, 95
28	2,4-Dichlorophenol	13.44	162	98, 164, 166
29	1,2,4-Trichlorobenzene (MS)	13.47	180	182, 184
30	Naphthalene-d8 (ISTD)	13.58	136	68
31	Naphthalene	13.67	128	129, 127
32	4-Chloroaniline	14.40	127	129, 65
33	Hexachlorobutadiene	14.61	225	223, 227
34	4-Chloro-3-methylphenol (MS)	17.04	107	142, 144
35	2-Methylnaphthalene	16.69	142	115, 141
36	Hexachlorocylopentadiene	17.76	237	235, 239
37	2,4,6-Trichlorophenol	18.36	196	198, 200
38	2,4,5-Trichlorophenol	18.55	196	132, 97, 198
39	2-Fluorobiphenyl (SURR)	18.60	172	171, 170
40	2-Chloronaphthalene	18.70	162	127, 164
41	1-Chloronaphthalene	18.80	162	127, 164
42	2-Nitroaniline	19.36	138	92, 65
43	Dimethyl phthalate	19.98	163	194, 77
44	Acenaphthylene	19.80	152	151, 76

45	2,6-Dinitrotoluene	20.08	165	89, 63
#	Compounds	Retention Time (min.)	Primary Ion	Secondary Ion(s)
46	3-Nitroaniline	20.35	138	92, 65
47	Acenaphthene-d10 (ISTD)	20.16	164	162, 160
48	Acenaphthene (MS)	20.23	153	154, 152
49	2,4-Dinitrophenol	20.50	184	154, 63
50	Dibenzofuran	20.56	168	139
51	4-Nitrophenol (MS)	20.93	109	65, 39
52	2,4-Dinitrotoluene (MS)	20.79	165	89, 63
53	Diethyl phthalate	21.29	149	177, 150
54	4-Chlorophenyl phenyl ether	21.25	204	206, 141
55	Fluorene	21.16	166	165, 167
56	4-Nitroaniline	21.43	138	108, 92
57	N-Nitrosodiphenylamine	21.49	169	168, 167
58	4,6-Dinitro-2-methylphenol	21.46	198	51, 105
59	Azobenzene	21.49	77	51, 182
60	2,4,6-Tribromophenol (SURR)	21.61	330	332, 328
61	4-Bromophenyl phenyl ether	21.97	248	250, 141
62	Hexachlorobenzene	22.13	284	286, 282
63	Pentachlorophenol (MS)	22.44	266	264, 268
64	Phenanthrene-d10 (ISTD)	22.54	188	94, 80
65	Phenanthrene	22.58	178	176, 152
66	Anthracene	22.64	178	176, 179
67	Carbazole	22.91	167	166, 168
68	Di-n-butyl phthalate	23.51	149	104, 150
69	Fluoranthene	24.11	202	200, 203
70	Benzidine	24.35	184	185, 183
71	Pyrene (MS)	24.38	202	200, 203
72	p-Terphenyl-d14 (SURR)	24.65	244	240, 243
73	Butyl benzyl phthalate	25.33	149	206, 91
74	3,3'-Dichlorobenzidine	25.90	252	254, 256
75	Chrysene-d12 (ISTD)	25.90	240	236, 120
76	Benzo(a)anthracene	25.87	228	226, 229
77	Chrysene	25.94	228	226, 229
78	bis-(2-Ethylhexyl)phthalate	26.08	149	167, 279
79	Di-n-octyl phthalate	26.80	149	279, 43
80	Benzo(b)fluoranthene	27.12	252	250, 126
81	Benzo(k)fluoranthene	27.15	252	250, 126
82	Benzo(a)pyrene	27.46	252	126, 113
83	Perylene-d12 (ISTD)	27.51	264	260, 265
84	Indeno(1,2,3-cd)pyrene	28.75	276	138, 277
85	Dibenz(a,h)anthracene	28.77	278	139, 279
86	Benzo(g,h,i)perylene	29.08	276	138, 277

ISTD = Internal Standard
SURR = Surrogate

MS = Matrix Spike

STAT Analysis Corporation:

STANDARD OPERATING PROCEDURE 4050

ORGANOCHLORINE PESTICIDES & POLYCHLORINATED BIPHENYLS by GAS CHROMATOGRAPHY/ ELECTRON CAPTURE DETECTOR (EPA Methods 8081A and 8082)

Revision 02
Effective Date: November 27, 2002

Author: Jeremiah Favero

Printed Name	Signature/Date
Jeremiah Favero Organic Manager	_____
Ian Graske QA/QC Manager	_____
Dennis Jachim Technical Manager	_____
Thomas M. Bauer Laboratory Director	_____

This Standard Operating Procedure has been prepared for the sole use of STAT Analysis Corporation.

Copy Number: _____

The absence of a Copy Number indicates this is an uncontrolled copy of the document supplied for information only.

Table of Contents

Title Page 1
Table of Contents 2
1. Identification of Test Method 3
2. Applicable Matrix or Matrices 3
3. Detection Limits 3
4. Scope and Application 3
5. Summary of Test Method 4
6. Definitions 4
7. Interferences 4
8. Safety 4
9. Equipment and Supplies 5
10. Reagents and Standards 5
11. Sample Collection, Preservation, Shipment and Storage 10
12. Quality Control 10
13. Calibration and Standardization 11
14. Procedure 16
15. Data Reduction, Calculations and Loading 23
16. Method Performance 24
17. Pollution Prevention 25
18. Data Assessment and Criteria For Quality Control Measures 25
19. Corrective Actions for Out-Of-Control Data 29
20. Contingencies for Handling Out-Of-Control Or Unacceptable Data 29
21. Waste Management 30
22. References 30
23. Forms, Figures, Tables, Diagrams, Flowcharts, Attachments or Validation Data 32
Attachment 1 MDLs and Reporting Limits for Organochlorine Pesticides & PCBs 32
Attachment 2 Retention Times for Organochlorine Pesticides & PCBs 33
Attachment 3 Procedure for Establishing Retention Time Windows 34

1.0 IDENTIFICATION OF TEST METHOD

SOP Title: Organochlorine Pesticides & Polychlorinated Biphenyls by Gas Chromatography/Electron Capture Detector is abbreviated as Pest-PCBs in laboratory records.

2.0 APPLICABLE MATRICES

Methylene chloride and organic solvent extracts from soil, sediment, ground and surface water, and mobility extracts are analyzed using this method.

3.0 DETECTION LIMITS

The lab follows the procedure found in 40CFR Part 136B to determine the MDL for each matrix type on an annual basis. See the STAT Analysis SOP 1210 for the MDL procedure, frequency and acceptance criteria. The MDLs measured by the lab and all supporting documentation are in the laboratory QA files for review.

The laboratory determined MDL must always be less than the reporting limit (RL), which is determined by the lowest calibration standard. The RLs will usually range from three to ten times the laboratory measured MDLs but this relationship may vary dependent on dilution of sample aliquots, matrix interferences, moisture adjustments (in solid samples), or method-specified requirements. Attachment 1 contains the current MDLs and reporting limits (RLs) for this SOP.

4.0 SCOPE AND APPLICATION

4.1 This standard operating procedure describes in detail the precise methods used at STAT Analysis Corporation for the analysis of environmental samples for Organochlorine Pesticides & PCBs by GC/ECD. This SOP as written is to be applied when SW-846 Methods 8081A or 8082 are requested. This SOP is used to determine the concentration of Pest-PCBs in extracts prepared from all types of solid waste matrices, soils, and ground water.

4.2 SOP 4020 can be used to quantitate Pest-PCBs that are soluble in hexane and other organic solvents and are capable of being eluted without derivatization as sharp peaks from gas chromatographic fused-silica capillary columns coated with a slightly polar silicone.

4.3 The reporting limits (RLs) for this SOP are shown in Attachment 1 for soils and water. RLs will be proportionately higher for sample extracts and samples that require dilution or reduced sample size to avoid saturation of the detector. PCBs are reported as Aroclors.

4.4 This method is restricted to use by or under the supervision of analysts experienced in the use of a Gas Chromatograph/Electron Capture Detector (GC/ECD) and skilled in the interpretation of complex chromatograms. Each analyst must demonstrate the ability to generate acceptable results with this method.

5.0 SUMMARY OF TEST METHOD

5.1 Prior to using this method, the samples must be prepared for the GC/ECD using the appropriate sample preparation and cleanup SOPs (Section 14.1). Samples are extracted at neutral pH with methylene chloride or other mixed organic solvents, and then solvent exchanged with hexane. This method describes chromatographic conditions that will allow for the separation of the compounds in the extract and for their qualitative and quantitative analysis by gas chromatography using an Electron Capture Detectors. Electron Capture Detectors are selective to electronegative compounds, especially chlorinated, fluorinated or brominated molecules. The ECD utilizes a radioactive ^{63}Ni source that ionizes the makeup gas (argon/methane 5%, P5) to form a stable cloud of free electrons in the ECD cell. When an electronegative compound enters the cell it immediately combines with some of the free electrons. This reduction of free electrons is proportional to the concentration of the compound. Identification of target analytes is accomplished by comparing component retention times to those of authentic standards. Quantitation is accomplished by comparing the response of a compound relative to an external standard using a five-point calibration curve.

5.2 **Method Modifications from Reference** – This SOP is based on EPA Methods 8081A and 8082 except that all samples are cleaned for sulfur by the addition into the autosampler vial of a small amount of granulated copper metal prior to analysis.

6.0 DEFINITIONS

The STAT Analysis Quality Manual Section 19.0 contains all the definitions of standard terms used in SOPs.

7.0 INTERFERENCES

7.1 GC/ECD data from all blanks, samples, and spikes must be evaluated for interferences. Determine if the source of interference is in the preparation and/or cleanup of the samples and take corrective action to eliminate the problem. Specific interferences are sulfur, polynuclear aromatics, chlorophenols, and phthalates.

7.2 Contamination by carryover can occur whenever high-concentration and low-concentration samples are sequentially analyzed. To reduce carryover, the sample syringe must be rinsed out between samples with solvent. Whenever an unusually concentrated sample is encountered, the sample after it must be reanalyzed to check for cross contamination.

7.3 Extract Cleanup SOPs (Section 14.1) are employed to remove interferences.

8.0 SAFETY

Numerous compounds analyzed by this method are suspected carcinogens. Proper personal protective equipment including safety glasses, nitrile gloves and a lab coat are required during different parts of this method. Other safety precautions must be conducted in accordance with the Chemical Hygiene Plan. Other actions can also be applied if deemed necessary. A reference file of Material Safety Data Sheets (MSDS) is available to all personnel involved in this method. The Electron Capture Detector (ECD) uses a radioactive source (Ni^{63}) as a source of electrons for analyte detection. The detector is wipe tested every six months for radioactive leakage. The wipes are analyzed by the National Leak Test Center in North Tonawanda, NY or at another Nuclear Regulatory Committee certified laboratory. Records of the leak tests are kept with the instrument.

9.0 EQUIPMENT AND SUPPLIES

The following apparatus is recommended for performing this procedure. Equivalent items can be used, if with their use, the analytical and QA/QC requirements in this SOP can be met. All catalog numbers in this SOP are current as of the effective date and thereafter subject to change.

9.1 Gas Chromatograph/Electron Capture Detector (GC/ECD)

9.1.1 Gas chromatograph(GC) – Agilent 6890 with electronic flow control Gas Chromatograph with Dual Agilent Microelectron Capture Detectors (Agilent G2397A) capable of utilizing dual capillary columns coupled to the detectors. The columns are coupled together and joined to a single injection port. Equipped with an Agilent Autosampler Model 7683

9.1.2 Primary column: 30 m x 0.25 mm ID x 0.25µm film thickness silicone-coated fused-silica capillary column (Restek Rtx-CLPesticides or equivalent)

9.1.3 Confirmatory column: 30 m x 0.25 mm ID x 0.25µm film thickness silicone-coated fused-silica capillary column (Restek Rtx-CLPesticides2 or equivalent)

9.1.4 Data system - An Agilent Kayak computer system using 3365 Chemstation Version C.00.01 to interpret data is attached to the GC

9.2 Micro syringes - 10 µL, 25 µL, 100 µL, 250 µL, 500 µL and 1,000 µL

9.3 Volumetric flasks, Class A - 10 mL, 25 mL, 50 mL with ground glass stoppers

9.4 Glass vials - 2-mL, for GC auto sampler with Teflon-lined screw caps or crimp tops

9.5 Amber glass vials - 10 mL with Teflon-lined screw caps

10.0 REAGENTS AND STANDARDS

The following reagents and standards are required to perform this procedure. When instructions are given on how to prepare a specific volume of a reagent or standard, larger or smaller volumes can be prepared as needed so long as the final concentrations remain the same. Any other deviations from the reagents or standards listed in this SOP could be detrimental to the quality of the data produced. Such deviations would have to be approved and documented (see 230 Corrective Action SOP).

Instructions for labeling and record keeping of reagents and standards are contained in SOP 1010 Standard and Reagent Preparation.

10.1 Analytical reagent grade chemicals shall be used in all tests. Unless otherwise indicated, all reagents shall conform to the specifications of the Committee on Analytical Reagents of the American Chemical Society, where such specifications are available.

10.2 Organic-free reagent water - All references to water in this SOP refers to Type II reagent water (in-house system).

10.3 Stock Standard solutions - Standard solutions can be prepared from pure standard materials or purchased as certified solutions. The routine laboratory practice is to purchase these standards from approved vendors. The standards used are: Organochlorine Pesticide Mix AB #2 (Restek catalog # 32292) and Pesticides Surrogate Mix (Restek catalog #32000). The standards used for the PCB stock solution are Aroclor 1016/1260 (Restek catalog #32039 or equivalent) and Pesticides Surrogate Mix (Restek catalog # 32000). Stock standard solutions and QC solutions are stored at < -10°C and must be replaced after six months, or sooner if comparison with quality control check samples indicates a problem. Different Storage conditions and expiration dates of other solutions are noted as warranted. The Aroclors are prepared using the following purchased standards: Aroclor 1221 (Supelco Catalog #4-8098), Aroclor 1232 (Supelco Catalog # 4-4805), Aroclor 1242 (Supelco Catalog #), Aroclor 1248 (Supelco Catalog #), Aroclor 1254 (Supelco Catalog #), Aroclor 1262 (Supelco Catalog # 4-4810) and Aroclor 1268 (Supelco Catalog # 502146). The Toxaphene stock standard is prepared using Supelco Catalog # 4-8243) and the technical Chlordane stock standard is prepared using Supelco Catalog # 4-8699.

10.3.1 Secondary Stock Standard Solutions – These two solutions are made using the individual Stock Standard solutions. Using microliter syringes, the following amounts of each Pesticide/Surrogate Stock solution are injected into a 10 mL volumetric flask containing 8 to 9 mL of hexane. The solution is brought to volume with hexane. The same procedure is used to make the PCB/Surrogate solution. The final concentration of each component is listed in Table 1. Note: these Secondary Stock solutions are the source solutions to prepare the calibration standards in Section 10.4. These standards are stored at < -10°C in 10 mL amber screw cap vials equipped with a Teflon lined caps. They are freshly prepared every six months, or sooner if check standards indicate a problem.

Table 1 Secondary Stock Standard Solutions

Stock Solution	Conc. Stock (µg/ml)	Vol. Stock (µL)	Final Conc. (µg/ml)
			Pesticide Secondary Stock Solution
Pesticide Mix AB #2 *	8 (16) (80)	125	0.10 (0.20) (1.0) *
Pesticide Surrogate	200	10	0.20
			PCB Secondary Stock Solution
Aroclor 1016	1000	100	10
Aroclor 1260	1000	100	10
Pesticide Surrogate	200	50	1.0

* Some analytes, that exhibit less sensitive responses, are at double the concentration , Methoxychlor is at 10 times the concentration

10.4 Calibration standards - A minimum of five calibration standards are prepared. The low standard is the RL and above the MDL. The others define the working range of the GC/ECD system. Calibration standards in current use for Pesticides: 0.005, 0.010, 0.025, 0.050, and 0.100µg/ml. Some analytes are at double the stated concentrations. (Table 2). Note: The Secondary Stock Solution standard is also used as the high level calibration standard. Calibration standards in current use for PCBs: 0.1, 0.5, 1.0, 1.5, and 2.0 µg/ml (Table 3). Using microliter syringes, the following amount of the Secondary Stock solution is injected into a 1 ml syringe. The solution is brought to volume with hexane. The final concentration of each component is listed in Table 2 and Table 3. Each solution is transferred to an autosampler vial. Storage is as indicated in 10.1.4. The continuing calibration verification standards (CCVs) are prepared weekly and stored at 4°C. Levels 2, 3 and 4 are used for the CCVs.

Table 2 Pesticide Calibration Standards

Level	Volume (µL) Secondary Stock	Volume (µL) hexane	Final Concentration (µg/ml) * +
1	50	950	0.005 (0.010)
2	100	900	0.010 (0.020)
3	250	750	0.025 (0.050)
4	500	500	0.050 (0.10)
5	1000	0	0.10 (0.20)

* Some analytes, that exhibit less sensitive responses, are at double the concentration,
\+ The surrogate concentration is equal to the concentration in ( )

For the multipeak response organochlorine pesticides, initially inject the midpoint calibration level for the target analyte to assist in qualitative identification. Initial calibration is performed if qualitative identification of a multipeak response pesticide is made in a sample. To perform the initial calibration, inject at least 3 concentration levels of separate standards for Technical Chlordane and Toxaphene into the gas chromatographic system. The following table provides guidance for concentration levels of the commonly performed target analytes. At least one of the levels for the calibration standards corresponds to a sample concentration at or below the reporting limit. The remaining standards correspond to the range of concentrations found in actual samples but do not exceed the working range of the GC system.

Components (units in ug/mL)	**Level 1**	**Level 2**	**Level 3**	**Level 4**	**Level 5**
Technical Chlordane	0.1	0.5	1.0	1.5	2.0
Toxaphene	0.1	0.5	1.0	1.5	2.0

Table 3: PCB Calibration Standards 1016 and 1260

Level	Volume (µL) Secondary Stock	Volume (µL) hexane	Final Concentration (µg/ml) #
1	10	990	0.10 (0.01)
2	50	950	0.50 (0.05)
3	100	900	1.0 (0.10)
4	150	850	1.5 (0.15)
5	200	800	2.0 (0.20)

\# The surrogate concentration is equal to the concentration in ( )

In addition, these calibration standards can be used qualitatively to demonstrate that a sample does not contain peaks that represent any one of the seven reported Aroclors.

A single midpoint standard of each of the other five Aroclors are required to aid the analyst in pattern recognition. The Aroclor 1016/1260 standards have been used to demonstrate the linearity of the detector, the midpoint standard of the remaining five Aroclors is used to determine the calibration factor for each Aroclor when qualitative identification of an

Aroclor is found in a sample. Preparation of the secondary stock standards is provided in the following table. The working standard is prepared by diluting 100 uL of the secondary stock standard solution to a final volume of 1000 uL in Hexane.

Aroclor Secondary Stock Standard Solutions

Stock Solution	Conc. Stock (µg/ml)	Vol. Stock (µL)	Final Conc. (µg/ml)
Aroclor 1221	1000	100	10.0
Pesticide Surrogate	200	50	1.0
Aroclor 1232	1000	100	10.0
Pesticide Surrogate	200	50	1.0
Aroclor 1242	1000	100	10.0
Pesticide Surrogate	200	50	1.0
Aroclor 1248	1000	100	10.0
Pesticide Surrogate	200	50	1.0
Aroclor 1254	1000	100	10.0
Pesticide Surrogate	200	50	1.0
Aroclor 1262	1000	100	10.0
Pesticide Surrogate	200	50	1.0
Aroclor 1268	1000	100	10.0
Pesticide Surrogate	200	50	1.0

10.5 Surrogate standards – Tetrachloro-meta-xylene (TCMX) and Decachlorobiphenyl (DCB) are the surrogates used for this method. Surrogate spike solutions are prepared using a stock standard solution purchased from Supelco (Cat. No. 4-8460 or equivalent). The spike solution is prepared by injecting 500 µL of the stock standard solution, concentration of 200 µg/mL, into a 100 ml volumetric flask. The flask is diluted to the mark with acetone for a final concentration of 1.0 µg/mL. All samples, blanks, LCSs, and MS/MSDs are spiked with 1.0 mL of the surrogate spike solution prior to extraction. This standard is stored at < -10°C in a glass vial with a Teflon lined screw cap.

10.6 Pesticide Performance Check (PPC) (Pesticide Breakdown Check Solution)- A hexane solution containing 4,4'-DDT and Endrin is used to verify injection port inertness and GC column performance. The breakdown standard used is Pesticide Performance Evaluation Mix w/ Surrogates (Restek Catalog #32074) Store at < -10°C when not being used. Inject 1 µL of this standard at the start of every 12 hours of operation.

10.7 Laboratory Control Sample/Matrix Spike standards - The LCS/matrix spike compounds for Pesticides are aldrin, alpha-BHC, beta-BHC, delta-BHC, gamma-BHC, p,p'-DDD, p,p'-DDE, p,p'-DDT, dieldrin, endosulfan I, endosulfan II, endosulfan sulfate, endrin, endrin aldehyde, endrin ketone, heptachlor, heptachlor epoxide and methoxychlor. Pesticide samples will be spiked at 0.25 µg/sample, 8.33 µg/kg for soil, 0.25 ug/kg for waste dilutions and 0.25 µg/L for water. The LCS/matrix spike compounds for PCBs are Aroclor 1016 and Aroclor 1260 unless otherwise client specified. PCB samples will be spiked at 1.0 µg/sample, 33.3 µg/kg for soil, 1.0 ug/mL for waste dilutions and 1.0 µg/L for water. See SOP 3500 for soils and SOPs 3030 and 3040 for water for LCS/Matrix Spike Solutions preparation. These standards are stored at < -10°C in a glass vial with Teflon lined screw cap.

10.8 Initial Calibration Verification Standards – Standards prepared from a different source at the midpoint of the calibration to verify the initial calibration. These two solutions are made using the following individual Stock Standard solutions: TCL Pesticides Mix (Supelco Cat. # 4-8913) and Pesticide Surrogate Spike Mix (Supelco Cat. # 4-8460 or equivalent; Aroclor 1016 (Supelco Cat. # 4-8097 or equivalent) and Aroclor 1260 (Supelco Cat. # 4-4809 or equivalent. Using microliter syringes, the following amounts of each Pesticide/Surrogate Stock solution are injected into a 10 mL volumetric flask containing 8 to 9 mL of hexane. The solution is brought to volume with hexane. The same procedure is used to make the PCB/Surrogate solution. The final concentration of each component is listed in Table 4. Note: these solutions are the Secondary ICV Stock source solutions to prepare the ICV Check Standards in Table 5. The Secondary Stock Standards are stored at < -10°C. in 10 mL amber screw cap vials equipped with Teflon lined caps. They are freshly prepared every six months, or sooner if check standards indicate a problem.

Table 4 Pesticide and PCBs ICV Secondary Stock Standards

Stock Solution	Conc. Stock (µg/ml)	Vol. Stock (µL)	Final Conc. (µg/ml)
			Pesticide Secondary ICV Stock Solution
TCL Pesticides Mix	2000	125	0.10
Pesticide Surrogate Mix	200	50	1.0
			PCB Secondary ICV Stock Solution
Aroclor 1016	1000	100	10
Aroclor 1260	1000	100	10
Pesticide Surrogate Mix	200	50	1.0

To prepare the ICV Check Standards: Using microliter syringes, the following amounts of the ICV Secondary Stock solution is injected into a 1 ml syringe. The solution is brought to volume with hexane. The final concentration of each component is listed in Table 5. Each solution is transferred to an autosampler vial. Storage is as indicated in 10.1.4.

Table 5 Pesticide and PCBs ICV Calibration Check Standards

Level	Volume (µL) ICV Secondary Stock	Volume (µL) hexane	Final Concentration (µg/ml)
PEST	250	750	0.025 (0.050) +
PCB	100	900	1.0 (0.10) #

+ The surrogate concentration is equal to the concentration in ( )
# The surrogate concentration is equal to the concentration in ( )

10.9 Acetone, hexane, isooctane, toluene and other appropriate solvents, pesticide quality or equivalent.

10.10 Helium – UHP grade

10.11 Copper – Granular, J.T. Baker Catalog #1720-01 or equivalent.

11.0 SAMPLE COLLECTION, PRESERVATION, AND HANDLING

11.1 Containers used to collect samples for the determination of semivolatile organic compounds are glass: 1 Liter bottles for water samples and various size jars for soil samples. They are equipped with screw caps with Teflon liners. Water samples containing residual chlorine should be field treated to remove the chlorine prior to collection. Plastic containers or lids may NOT be used for the storage of samples due to the possibility of sample contamination from the phthalate esters and other hydrocarbons within the plastic.

11.2 Samples must be stored under refrigeration at between 0.1 and 6.0°C. Extraction must be within 7 days from sampling date for water and 14 days for solids. Sample extracts are stored in the dark at between 0.1 and 6.0°C and must be analyzed within 40 days of extraction.

11.3 No chemical preservation is required for this method.

11.4 All samples are stored away from all standards, reagents, food, and other potentially contaminating sources in order to prevent cross contamination.

12.0 QUALITY CONTROL

The following details the QC requirements that apply to this analysis. Each Quality Control Indicator (QCI) provides information pertaining to either method or individual sample performance. Our goal is to produce defensible data of known and documented quality. The results of these Quality Control Indicator (QCI) samples are used to assess the acceptability of data.

12.1 Blanks

Method Blank analysis is performed to determine if any contamination is present in the analytical process and is used to evaluate acceptance of the batch of samples. A method blank shall be prepared once per preparation batch of 20 or less samples per matrix type. If more than 20 samples are prepared a second blank shall be prepared after the twentieth sample. The method blank shall be processed through all preparatory steps used for the samples, including cleanup procedures. The blank shall be analyzed using the same instrument and conditions as the samples.

The Solvent Blank, clean solvent injected into the GC/ECD, is used to monitor the GC/ECD system for potential cross-contamination from one sample to another or for residual contamination in the system.

12.2 Calibration Verification

An Initial Calibration Verification (ICV) standard containing all of the target analytes reported in this method (refer to section 10.9) shall be analyzed immediately after the completion of the initial calibration. The ICV shall be purchased from a second source to verify analyte concentrations.

12.3 Laboratory Control Sample (LCS)

The LCS is used to evaluate the performance of the total analytical system, including all preparation and analysis steps. The LCS shall be prepared once per preparation batch of 20 or less samples per matrix type. If more than 20 samples are prepared a second LCS shall be prepared after the twentieth sample. The LCS shall be processed through all preparatory steps used for the samples, including cleanup procedures. The LCS shall be analyzed using the same instrument and conditions as the samples. Refer to section 10.8 for LCS analytes and concentrations.

12.4 Surrogates

The surrogates used for this method are added to all samples, standards, and blanks. Refer to section 10.5 for preparation and concentration instructions.

12.5 Duplicates

Duplicates of field samples or of the LCS must be prepared in compliance with the method requirements and client directives. Duplicate LCS's are prepared for sample wipes. It would be impractical to prepare a matrix spike and matrix spike duplicate. Reproducibility performance would be the same as for a matrix spike/matrix spike duplicate.

12.6 Matrix Spike and Matrix Spike Duplicate (MS/MSD)

MS/MSDs indicate the effect of the sample matrix on the precision and accuracy of the results generated using the selected method. This information does not determine the validity of the entire batch. MS/MSDs must be analyzed at a minimum of 1 per 20 samples per matrix per preparation procedure, or as specified by the required test method. If an MS/MSD pair is not analyzed in the preparation batch, an LCS/LCSD pair is analyzed. Samples chosen for matrix spiking are rotated among different clients and/or different client projects. This is accomplished through communication between the Department Manager and the analyst. In addition, designated samples, as indicated by client request or contract requirement, are matrix spiked. The MS/MSD pair shall be processed through all preparatory steps used for the samples. They shall be analyzed using the same instrument and conditions as the samples. Refer to section 10.8 for MS analytes and concentrations. Some clients may require different spiking levels and/or target analytes, these specific needs are documented on the request for analysis forms.

13.0 CALIBRATION AND STANDARDIZATION

13.1 GC Performance

Because of the sensitivity of the electron capture detector, the injection port and column should always be cleaned prior to performing the initial calibration. If the instrument has been idle for a few days, it may have to be primed by injecting a high level standard followed by a solvent blank. This may help to coat active sites on the column and determine if any residue elutes from the column.

Each GC/ECD system must be evaluated to meet the criteria of ≤15% breakdown of 4,4'-DDT and ≤15% breakdown of Endrin using the PPC solution in 10.6. Using the autosampler, inject 1 µL of the solution on to the column. Analyze the solution using the same instrument operational procedure as the samples. A custom report was written using the ChemStation software to automatically calculate pesticide breakdown. It is invoked by clicking on CustRpt/Print Report after reviewing the pesticide breakdown injection.
The following formulae are used to calculate the percent breakdown:

$$\%\ \text{breakdown of DDT} = \frac{\text{sum of degradation peak areas (DDE + DDD)} * 100\ \%}{\text{sum of all peak areas (DDT + DDE + DDD)}}$$

$$\%\ \text{breakdown of Endrin} = \frac{\text{sum of degradation peak areas (aldehyde + ketone)} * 100\ \%}{\text{sum of all peak areas (Endrin + aldehyde + ketone)}}$$

Analyses must not begin until these criteria are met. If degradation exceeds criteria for either compound and/or poor chromatography is noted, the injection port may require cleaning. It may also be necessary to cut off an additional 10 to 20 cm of the capillary column.

Note: the 12 hour analytical batch period begins at the start of the PPC analysis (DDT/Endrin breakdown check) that is recorded as the data acquisition start time on the data file. The last valid calibration standard in the ICAL must have a data acquisition start time less than 12 hours from the start of the batch period.

13.2 **Initial Calibration (ICAL)**

13.2.1 Analyze 1 µL of each calibration standard and tabulate the area of the analyte against concentration for each compound. Calculate Calibration Factors (CFs) for each compound in each calibration standard as follows:

$$CF = A_x / C_x$$

where:

A_x = Area of the peak for the compound being measured.

C_x = Concentration of the compound being measured (ng/µL = µg/mL = mg/L).

13.2.2 Calculate the average calibration factor ($\overline{CF}$) for each compound as follows:

$$\overline{CF} = (\Sigma\, CF_1 \text{ to } CF_n)/n$$

where: CF = CF for each of the calibration levels (i.e., 5)

n = Number of CF values (i.e., 5)

13.2.3 The initial calibration information for the single peak response organochlorine pesticides, the multipeak response organochlorine pesticides and the Aroclors are stored in separate quantitation files for processing. The quantitation of multipeak organochlorine pesticides and aroclors are performed by pattern recognition and fingerprinting techniques using 5 peaks corresponding to major (>25% height of largest peak) components unique to the 1016/1260 mixture; 3 to 5 peaks for all other aroclors; and 4 to 6 peaks for multipeak response organochlorine pesticides. If it is determined that one calibration level has an unacceptable response, that level may be reanalyzed once. If any major changes are made to the system (e.g. column changed or detector cleaned), recalibration of the system must take place.

13.2.4 Using the CFs from the initial calibration, calculate the percent relative standard deviation (%RSD) for the compounds as follows:

To calculate %RSD: $\%RSD = 100\% \times SD/\overline{CF}$

where:

%RSD = % Relative Standard Deviation

$\overline{CF}$ = average of initial CF's for a compound

SD = standard deviation (n-1) of average CFs for a compound

To calculate Standard Deviation (n-1 degrees of freedom)

$$\sqrt{\overline{\quad\quad}}$$

$$SD = \sum_{i=1}^{N} \frac{(CF_i - CF)^2}{n-1}$$

where: CF_i = CF for each of the 5 calibration levels
n = Number of CF values (i.e., 5)

13.2.5 Guidance: If the %RSD of any compound is > 30%, then the chromatographic system may be too reactive for analysis to begin. Check the linearity test in Section 13.2.6 to determine if the calibration curve is acceptable (it will probably fail criteria of r ≥0.99). Clean or replace the injector and/or capillary column, then repeat the calibration procedure beginning with section 13.1.

13.2.6 Linearity - If the %RSD of any compound is 20% or less, then the calibration factor is assumed to be constant over the calibration range, and the average calibration factor is used for quantitation. If the %RSD is greater than 20%, first order linear regression is used. The calibration curve must meet the requirements for curve fitting listed in SW-846 8000B and the correlation coefficient is ≥0.99. The equation is not forced through the origin.

The regression will produce the slope and intercept terms for a linear equation in the form:

$y = (a * x) + b$

where:

y = Instrument response (peak area or height)
a = Slope of the line (also called the coefficient of x)
x = Concentration of the calibration standard
b = The intercept

13.2.7 Retention Time Windows: See Attachment 3 for the procedure to establish Retention Time Windows. If, in the professional judgment of the Department Manager or the Technical Manager, the calculated window is artificially too narrow and the potential for reporting a false negative exists, the retention time window is expanded.

13.2.8 PCB analysis: A minimum of 3 peaks must be chosen for each Aroclor, and preferably 5 peaks. The peaks must be characteristic of the Aroclor in question. Choose peaks in the Aroclor standards that are at least 25% of the height of the largest Aroclor peak. For each Aroclor, the set of 3 to 5 peaks should include at least one peak that is unique to that Aroclor. Use at least five peaks for the Aroclor 1016/1260 mixture, none of which should be found in both of these Aroclors. Late-eluting Aroclor peaks are generally the most stable in the environment. NOTE: this same approach is used for the multi-component pesticide Technical Chlordane. Toxaphene is quantitated using a total peak area summary. The individual concentrations for each peak are transferred to the LIMS software. The LIMS software is set up to add all the individual peaks and calculate the average of all the multi-component peaks. The calculated average is used to determine, based on sample preparation values, the final concentration of the Aroclor or multi-component pesticide.

13.2.9 Before sample analysis can begin, a Initial Calibration Verification (ICV) (see Sec. 10.9) must be performed. The ICV results must be within the acceptance criteria as established for the CCV compounds (Section 13.3).

NOTE:

1. All calibration curves must have a unique identifier. It is recommended that the calibration date be incorporated into the identifier for easy reference.
2. All initial calibration standards (Pesticide or PCBs) should be analyzed within 12 hours after the start time of the PPC check analysis. See also point #3.
3. Calibration must be completed (all standard levels analyzed) within 24 hours or the entire calibration sequence must be repeated. If the calibration was not completed in the first 12 hour period, it may continue into a second 12 hour period. Standard calibration levels from either 12 hour period can be used. An exception follows: If the PPC check analysis does not pass criteria for the second 12 hour period and major maintenance was done to the instrument or the instrument parameters were adjusted in order to obtain an acceptable PPC check analysis, the entire calibration sequence must be repeated.
4. All initial calibration standards must be analyzed as a group. No field sample analyses are allowed during the calibration sequence.
5. Do not add calibration standards and update the curve after the original calibration date.
6. Multiple analyses of the same calibration level are not allowed to be included in the calibration curve.
7. Compound responses cannot be selected from different analyses of the same calibration level (i.e. all compound responses for level 1 must come from the same data file).
8. If more than five calibration levels are analyzed, it is permissible to either drop the low compound concentration (poor response) or the high compound concentration (detector saturation). It is not allowed to drop a point in the middle of the curve.
9. If more than five calibration levels are analyzed, it is permissible to drop an entire level if the analyst can document a specific reason or reasons why that level should be excluded. Mechanical failure, significant loss of all analyte responses possibly due to poor technique in standard preparation, or software malfunction during data acquisition (system did not acquire all compound data) are plausible reasons. The reason must be justified and documented. The supervisor should review this situation and approve the analyst's decision.
10. The need to analyze more than two analyses of the same calibration level indicates a potential problem with the secondary stock solution. Prepare a fresh secondary stock solution and repeat all five calibration levels. It is recommended that all calibration standard levels come from the same secondary stock solution.
11. Manual integration must only be used if the software fails to properly integrate the peak. If manual integration is used for a particular compound, all levels of that compound do not have to be manually integrated, but all levels must be integrated in a similar manner. Example: the computer generated integration of a compound in the low level standard is not technically sound. A manual integration of the compound is performed (due to baseline noise, etc) in order to achieve a technically sound integration. Other levels of the compound are integrated correctly by the computer. The manual integration of the low level must match, as best as possible, the computer generated integrations for all other levels.
12. If any compound in the mid-point level is manually integrated, the integration of this compound must be reviewed for every continuing calibration standard and QC check solution (i.e. LCS, and Matrix Spike) to ensure that the integration is the same as the manual integration performed in the initial calibration (ICAL) mid-point. A consistent manner of integration must be achieved.
13. All manual integrations must be reviewed and approved at the supervisory level.

13.3 Continuing Calibration Verification (CCV)

13.3.1 The GC/ECD system must meet performance criteria every 12 hours during analysis of samples (see Section 13.1).

13.3.2 A continuing calibration verification (CCV) standard is analyzed every 12 hours during analysis of samples. Different standards are analyzed for the CCV such that a wider range of the calibration curve is verified. For example: on successive days analyze the Level 2, then the Level 3 and on the third day, the Level 4

standard solution. Compare the calibration factors and retention times from the CCV with the following criteria.

13.3.3 Control limits for the CCV compounds are ± 15% difference from the ICAL Calibration Factor (CF) if the average CF is used for quantitation, or ± 15% drift from the true concentration of the CCV compound if linear regression is used.

EXCEPTION: If this criterion is exceeded for any compound, use the approach described in Sec. 7 of EPA Method 8000B to calculate the average percent difference across all compounds. If the average of the responses for all compounds is within ±15%, then the calibration has been verified. However, the conditions in Sec. 7 of EPA Method 8000B also apply, e.g., the average must include all compounds in the calibration, regardless of whether they are target compounds for a specific project, and the data user must be provided with the calibration verification data or a list of those compounds that exceeded the ±15% limit.

13.3.4 Compare the retention time of each compound in the calibration standard with the absolute retention time windows. The center of the absolute retention time window for each compound is its retention time in the mid-concentration standard analyzed during the initial calibration. Each compound in each standard must fall within its respective retention time window. If not, the gas chromatographic system must either be adjusted so that a second analysis of the standard does result in all compounds falling within their retention time windows, or a new initial calibration must be performed and new retention time windows established.

13.3.5 If the CCV results obtained are outside the acceptance criteria, corrective actions must be performed. If routine corrective actions fail to produce an acceptable *second consecutive (immediate)* CCV, then either the lab has to demonstrate performance after corrective action with two consecutive successful CCVs, or a new ICAL must be performed. If the instrument has not demonstrated acceptable performance, sample analyses cannot continue until a new ICAL is established and verified with an ICV. However, sample data associated with an unacceptable CCV may be reported as qualified data under the following special conditions:

13.3.5.1 When the acceptance criteria for CCV are exceeded high, i.e., high bias, and there are associated samples that are non-detects, then those non-detects may be reported. Otherwise the samples affected by the unacceptable calibration verification must be reanalyzed after a new ICAL has been established, evaluated and accepted.

13.3.5.2 When the acceptance criteria for the CCV are exceeded low, i.e., low bias, those sample results may be reported if they exceed a maximum regulatory limit/decision level. Otherwise the samples affected by the unacceptable verification must be reanalyzed after a new ICAL is established and verified with an ICV.

13.3.5.3 When the acceptance criteria for the CCV are exceeded and it is not possible to reanalyze the sample due to limited sample quantity AND a new sample cannot be obtained by the laboratory, the data may be reported with the appropriate data qualifiers if the client has been contacted and agrees, in writing, to accept the qualified data.

13.4 Records: Initial and Continuing Calibration Records will contain, at a minimum, the following:

1) Calibration date
2) Test method
3) Instrument
4) Analysis date
5) Each analyte name
6) Analyst's initials or signature

7) Standard Concentration (appropriate units) and number of standards
8) Response (appropriate units)
9) Calibration curve or calibration factor
10) Evaluation of and Statistics for ICAL curve fit in order to judge calibration curve acceptance
11) Evaluation of and Acceptance Limits for ICV analysis in order to judge calibration curve acceptance
12) Evaluation of and Acceptance Limits for CCV analysis in order to judge continuing calibration acceptance

13.5 Thermometers - The thermometers in the sample refrigerators and the standards freezer must be checked daily. They must meet performance criteria.

14. PROCEDURE

14.1 Sample Preparation

14.1.1 Samples must be prepared in accordance with SOP 3500.

14.1.2 Extract Cleanup: Extracts may be cleaned up by any of the following methods prior to GC/ECD analysis. Fine powdered copper is added to all blank, LCS, MS, MSD and sample vials immediately prior to analysis. This is a preliminary step in sulfur cleanup.

Compounds	**SOPs**
Polychlorinated Biphenyls	3060, 3070, 3080, 3330
Pesticides	3060, 3070, 3330

If crystals of sulfur are present in the extract, then SOP 3070 (EPA Method 3660B) should be employed prior to Florisil cleanup.

14.1.3 Direct Injection: In very limited applications direct injection of the sample into the GC/ECD system with a 10 µL syringe may be appropriate (see SOP 3050 for preparation). The reporting limit is very high (approximately 1 to 10 mg/L); therefore, it is only applicable where concentrations in excess of 1 mg/L are expected.

14.1.4 Extract Preparation: Sample extracts should be at ambient temperature prior to use. If there is precipitation in any sample autosampler vial, notify the Department Manager prior to analysis to determine what approach to take.

14.2 GC/ECD Analysis

14.2.1 Instrument Conditions: The recommended GC/ECD operating conditions:

Initial temperature:	140°C hold for 2 minutes
Ramp 1 temperature program	10.0°C/min
Final temperature 1:	200°C hold for 0.0 minutes
Ramp 2 temperature program	20 °C/min
Final temperature 2:	310 °C hold for 6.50 minutes
Injector temperature:	250°C
Source temperature:	300 °C
Sample volume:	1 µL
Carrier gas:	Helium at 1.2 mL/min
Split flow:	Splitless
Makeup (Ar/Me) Flow:	60 ml/minute (constant)

14.2.2 Access the computer and create a batch sequence file. See Section 14.3

14.2.3 Using the autosampler, inject 1 µL of the PPC and inject 1 µL of the column performance check solution. Evaluate using acceptance criteria. See Section 13.1

14.2.4 Inject 1 µL of the Continuing Calibration Verification Standard (CCV) and evaluate using CCV acceptance criteria. See Section 13.3.

14.2.5 If all criteria are met, continue with sample analysis, injecting 1 µL of each extract, as outlined below.

14.2.6 If the extract result exceeds the initial calibration curve range of the GC/ECD system, extract dilution is an option. If extract dilution is required, perform the appropriate dilution. Then the diluted extract is analyzed.

14.2.7 Perform all qualitative and quantitative measurements as described in Sections 14.4 and 14.5. After analysis, store the extracts in the dark at 0.1- 6°C.

14.3 Analytical Sequence

START CHEMSTATION SOFTWARE:

From NT Desktop: Start/Programs/MSD ChemStation/Instrument #1/Instrument #1

The software will locate the instrument and all peripheral equipment. Once the software is fully loaded there will be two windows visible. Window one is the instrument control window. Instrument parameters are readily viewed from this window. The second window is the sequence control window. No instrument parameters are viewable from this window.

SEQUENCE SETUP

From menu: Sequence/Run

1. Set current date in Data File Directory space (ie., C:\MSDCHEM\1\DATA\060702\)
2. OK (to save changes)

From menu: Sequence/Edit Sample Log Table

1. Set data file name using current date using the following format MMDDYY## (ie., 06070201)
2. Set up sequence order using the following format: (**NOTE:** Tune and CCV must always run first)

Vial	METHOD	SAMPLE NAME
1	BAKEOUT	BLANK001
2	PCB0610	PE PESTEVAL
3	PCB0610	CCV PESTSTD0.025
4	PCB0610	CCV PCBSTD1.0
5	PCB0610	CCV PCB1242STD1.0
6	PCB0610	CCV PCB1254STD1.0
7	PCB0610	MBLK MB-4426-PP
8	PCB0610	LCS LCS-4426-PCB
9	PCB0610	LCS LCS-4426-PEST
10	PCB0610	SAMP 0211034-001B

...	...	...
33	PCB0610	SAMP 0211045-010A
1	BAKEOUT	BLANK002
2	PCB0610	PE PESTEVAL
3	PCB0610	CCV PESTSTD0.025-2
4	PCB0610	CCV PCBSTD1.0-2
5	PCB0610	CCV PCB1242STD1.0-2
6	PCB0610	CCV PCB1254STD1.0-2
34	PCB0610	SAMP 0211045-011A

NOTE: The number of samples, including tune and CCV that can be analyzed within the 12 hour window varies with each analysis. Use this list as a guide but always check that the samples were analyzed within 12 hours of the PPC injection.

PCB/PEST = 32 total samples

3. OK (to save changes)

From menu: Method/Set New Default Paths

1. Update the method and data file paths using the current date (ie., C:\MSDCHEM\1\DATA\060702\)
2. OK (to save changes)

Using Windows Explorer copy all of the method files from the previous day's folder into the current day's folder.

TO START SEQUENCE:

From menu: Sequence/Run/Run Sequence

Start of the 12 hour sequence (as documented as the date/time stamp on the data file for the PPC Standard):

The analytical sequence for Initial Calibration is: * Solvent Blanks are optional if carryover is not an issue.

Solvent Blank
PPC Standard (breakdown check)
Calibration standard (S1) Pesticides
Calibration standard (S2) Pesticides
Calibration standard (S3) Pesticides
Calibration standard (S4) Pesticides
Calibration standard (S5) Pesticides
Toxaphene mid-point concentration standard (optional)
Technical Chlordane mid-point concentration standard (optional)
Initial Calibration Verification Standard (ICV) Pesticides

Solvent Blank
PPC Standard (breakdown check if also analyzing for Pesticides)
Calibration standard (S1) PCBs 1016 / 1260
Calibration standard (S2) PCBs 1016 / 1260
Calibration standard (S3) PCBs 1016 / 1260
Calibration standard (S4) PCBs 1016 / 1260
Calibration standard (S5) PCBs 1016 / 1260
PCB 1221 mid-point concentration standard (optional)
PCB 1232 mid-point concentration standard (optional)

PCB 1242 mid-point concentration standard
PCB 1248 mid-point concentration standard
PCB 1254 mid-point concentration standard
Initial Calibration Verification Standard (ICV) PCBs 1016 / 1260

The analytical sequence for Sample Analysis is:

Start of first 12 hour period

Solvent Blank*
PPC Standard (breakdown check) (if analyzing for pesticides)
Continuing Calibration Verification Standard (CCV) Pesticides (as per sample batch requirement)
Continuing Calibration Verification Standard (CCV) PCBs (as per sample batch requirement)
Method Blank (MB)
LCS
(LCS Duplicate optional)
Sample #1
Sample #1 Matrix Spike (MS)
Sample #1 Matrix Spike Duplicate (MSD)
Sample #1 Laboratory Duplicate (optional)
Samples #2, #3, etc.
End of 12 hour period

Start of second 12 hour period

Solvent Blank*
PPC Standard (breakdown check) (if analyzing for pesticides)
(CCV) Pesticides (as per sample batch requirement)
(CCV) PCBs (as per sample batch requirement)
Samples up to #20
Method Blank (MB) #2
LCS #2
(LCS #2 Duplicate optional)
Sample #21
Sample #21 Matrix Spike (MS)
Sample #21 Matrix Spike Duplicate (MSD)
Sample #21 Laboratory Duplicate (optional)
Samples #22, #23, etc.
End of 12 hour period

14.4 Data Interpretation - Qualitative Analysis

14.4.1 An analyte is tentatively identified based upon Retention Time (RT). See Attachment 2 for approximate analyte retention times for both GC columns. Two criteria must be satisfied to verify identification: (1) elution of sample component at the same GC retention time (RT) as those of the standard component on the first column; and (2) elution of sample component at the same GC retention time (RT) as those of the standard component on the second (confirmational) column. Note: both columns must exhibit acceptable performance for the tentatively identified component (13.3).

14.4.2 PCB analysis: A minimum of 3 peaks must be chosen for each Aroclor, and preferably 5 peaks. The peaks must be characteristic of the Aroclor in question. Choose peaks in the Aroclor standards that are at least 25% of the height of the largest Aroclor peak. For each Aroclor, the set of 3 to 5 peaks should include at least one peak that is unique to that Aroclor. Use at least five peaks for the Aroclor 1016/1260 mixture, none of which should be found in both of these Aroclors. Late-eluting Aroclor peaks are generally the most stable in the environment. NOTE: this same approach is used for the multi-component pesticide Technical Chlordane. Toxaphene is quantitated using a total peak area summary. The analyst must use his professional judgment to determine if chromatographic patterns are discernable and if they match those of known multi-component Aroclors or pesticides. The Department Manager must also agree with the conclusions of the analyst.

14.4.3 Comparison between results from different columns. When sample results are confirmed using the two dissimilar columns, the agreement between the quantitative results should be evaluated after the identification has been confirmed. Calculate the relative percent difference (RPD) between the two results. If one result is significantly higher (e.g., >40%), check the chromatograms to see if an obviously overlapping peak is causing an erroneously high result. If no overlapping peaks are noted, examine the baseline parameters established by the instrument data system (or operator) during peak integration. If no anomalies are noted, review the chromatographic conditions. If there is no evidence of chromatographic problems, report the higher result. This approach is conservative relative to protection of the environment. The data user should be advised of the disparity between the results on the two columns.

14.4.4 Closely eluting compounds: Sufficient GC resolution is achieved if the height of the valley between two peaks is less than 25% of the sum of the two peak heights. An exception to this guidance occurs for the compounds Endosulfan I and p,p'-DDE (4,4'-DDE). Although the GC resolution may be minimal between the two, they are routinely reported as individual compounds. The Manual Integration SOP 1255 is used for guidance in the integration of these two peaks and for other situations that may require analyst efforts to correct computer generated integrations that are not technically sound.

14.4.5 Identification is hampered when sample components are not resolved chromatographically or coelute. When gas chromatographic peaks obviously represent more than one sample component (i.e., a broadened peak with shoulder(s) or a valley between two or more peaks), the analyst must use his professional judgment to determine the presence/absence of the target compound and its concentration. Or the elevation of the reporting limit that would indicate a level at which the compound concentration could not exceed. The Department Manager must also agree with the conclusions of the analyst.

14.4.6 Confirmational analysis: Note: Confirmational analysis is required for GC analysis methods of organic compounds unless stipulated in writing by the client. For this GC method, dual dissimilar column analyses are employed to verify the compound identification and quantitation when results greater than the reporting limit are detected on a sample from a location that has not been previously tested by the laboratory. Note that confirmations are documented and included with the initial analysis.

14.4.6.1 The routine laboratory approach: Identify the analyte and calculate its concentration from one column and confirm the analyte identification and concentration using data from the second (confirmational) column. The following may also be employed:

14.4.6.2 GC/MS confirmation may be used if the concentration is sufficient for detection by GC/MS using a SIM mode for qualitative screening purposes. GC/MS confirmation should be accomplished by analyzing the same extract that is used for GC/ECD analysis and the extract of the associated method blank. The base/neutral/acid extract and the associated blank may be used for GC/MS confirmation if the surrogates and internal standards do not interfere and if it is demonstrated that the analyte is stable during acid/base partitioning. However, if the compounds are *not* detected in the base/neutral/acid extract, then GC/MS analysis of the pesticide extract must be performed. A QC reference sample containing the compound must also be analyzed by GC/MS. The concentration of the QC reference sample must demonstrate that those pesticides identified by GC/ECD can be confirmed by GC/MS.

14.4.6.3 Confirmation is by using GC/MS SIM mode: A solution containing the compound in question at a known concentration is injected into the GC/MS and analyzed. The retention time and a major ion are determined. The sample extract is then injected and analyzed to confirm the presence of the compound. If present, the GC analysis concentration is reported unless, in the professional judgment of the GC/MS analyst, the GC concentration is > twice the estimated GC/MS value. Further analysis can be performed to clarify the data or all data can be reported to the client.

14.4.6.4 As noted in Section 14.4.6.1, the laboratory confirms positive findings for the single peak response analytes from the second (confirmational) column. GC/MS quantitation is not performed unless specifically required by the pertinent regulatory authority or per client project requirements.

14.5 Data Interpretation - Quantitative Analysis

14.5.1 Once a compound has been identified, the quantitation of that compound is based on its response (peak area).

14.5.2 If the RSD of an analyte's average calibration factor is ≤15%, then the concentration in the extract is determined using the average calibration factor (CF) from initial calibration data. If the RSD of an analyte's average calibration factor is > 15%, linear regression is used to determine the concentration (13.2).

14.5.3 PCB analysis: The following information is taken directly from EPA Method 8082 Sections 7.7.3 and 7.9:

7.7.3 When samples are analyzed from a source known to contain specific Aroclors, the results from a single-column analysis may be confirmed on the basis of a clearly recognizable Aroclor pattern. This approach should not be attempted for samples from unknown or unfamiliar sources or for samples that appear to contain mixtures of Aroclors. In order to employ this approach, the analyst must document:

• The peaks that were evaluated when comparing the sample chromatogram and the Aroclor standard.

• The absence of major peaks representing any other Aroclor.

• The source-specific information indicating that Aroclors are anticipated in the sample (e.g., historical data, generator knowledge, etc.). This information should either be provided to the data user or maintained by the laboratory.

7.9 Quantitation of PCBs as Aroclors

The quantitation of PCB residues as Aroclors is accomplished by comparison of the sample chromatogram to that of the most similar Aroclor standard. A choice must be made as to which Aroclor is most similar to that of the residue and whether that standard is truly representative of the PCBs in the sample.

7.9.1 Use the individual Aroclor standards (not the 1016/1260 mixtures) to determine the pattern of peaks on Aroclors 1221, 1232, 1242, 1248, 1254, 1262 and 1268. The patterns for Aroclors 1016 and 1260 will be evident in the mixed calibration standards.

7.9.2 Once the Aroclor pattern has been identified, compare the responses of 3 to 5 major peaks in the single-point calibration standard for that Aroclor with the peaks observed in the sample extract. The amount of Aroclor is calculated using the individual calibration factor for each of the 3 to 5 characteristic peaks chosen in (this SOP Section 14.4.2) and the calibration model (linear or non-linear) established from the multi-point calibration of the 1016/1260 mixture. A concentration is determined using each of the characteristic peaks and then those 3 to 5 concentrations are averaged to determine the concentration of that Aroclor.

7.9.3 Weathering of PCBs in the environment and changes resulting from waste treatment processes may alter the PCBs to the point that the pattern of a specific Aroclor is no longer recognizable. Samples containing more than one Aroclor present similar problems. If the purpose of the analysis is not regulatory compliance monitoring on the basis of Aroclor concentrations, then it may be more appropriate to perform the analyses using the PCB congener approach described in this method (EPA Method 8082). If results in terms of Aroclors are required, then the quantitation as Aroclors may be performed by measuring the total area of the PCB pattern and quantitating on the basis of the Aroclor standard that is most similar to the sample. Any peaks that are not identifiable as PCBs on the basis of retention times should be subtracted from the total area. When quantitation is performed in this manner, the problems should be fully described for the data user and the specific procedures employed by the analyst should be thoroughly documented.

14.6 Record the following information in the appropriate logbook or data file. Include any deviations from this procedure. Analyst initials, date of analysis, sample number or ID, initial sample volume or weight processed, final extract volume, calibration standard sample or solution identifier, QC sample or solution identifier, surrogate solution identifier, any dilution information, readings from support equipment, data file name, instrument method name, visual observations, and any other information as deemed necessary.

14.7 Troubleshooting

The experience of the analyst performing GC/ECD analyses is invaluable to the success of the methods. Each day that the analysis is performed, the daily calibration standard (CCV) must be evaluated to determine if the chromatographic system is operating properly. Questions that must be asked: Do the peaks look normal? Is the response obtained comparable to the response from previous calibrations? Careful examination of the standard chromatogram can indicate whether the column is still good, the injector is leaking, the injector septum needs replacing, etc. If any major changes are made to the system (e.g. column changed or detector cleaned), recalibration of the system must take place.

14.8 Routine Maintenance - Record all maintenance

14.8.1 Daily, or as needed according to sample throughput, change the septum and or the injection port liner. Trim a short section from the analytical column as necessary. Alternatively, the use of a guard column helps to protect the analytical column from residue buildup. A short section, 10 to 20 cm, of the guard column may be trimmed as to improve column performance.

14.8.2 Clean the detector on an as needed basis (loss of sensitivity). Follow the manufacturer's instructions.

14.8.3 Inspect the autosampler syringe for wear; replace as necessary.

14.8.4 Check the carrier gas supply; replace as necessary.

15. DATA REDUCTIONS, CALCULATIONS, AND LOADING

15.1 The data system performs the calculations.

15.1.1 If the %RSD of an analyte's calibration factor is 15% or less, then the concentration in the extract may be determined using the average calibration factor (CF) from the initial calibration data (13.2) and the following equation:

$C_{ex}(mg/L) = A_x / CF$

where:

A_x = Area of the peak for the compound being measured.
C_{ex} = Concentration of the compound being measured in the extract (ng/µL = µg/mL = mg/L).

15.1.2 Alternatively, linear regression (Sec. 13.2) may be used for determination of the extract concentration.

15.2 Compute the concentration of the analyte in the sample using the equations in Secs. 15.2.1 and 15.2.2.

15.2.1 The concentration of the analyte in the liquid samples is calculated using the concentration of the analyte in the extract and the volume of liquid extracted, as follows:

$$\text{Concentration in liquid (mg/L)} = \frac{C_{ex} * V_f}{V_i}$$

or

$$\text{Concentration in liquid (µg/L)} = \frac{C_{ex} * V_f * 1000}{V_i}$$

where:

V_f = final extract volume in mL (includes any dilution volumes)
V_i = initial volume of liquid extracted, in mL.

15.2.2 The concentration of the analyte in the solid sample is calculated using the concentration of the analyte in the extract and the weight of the solid extracted, as follows:

$$\text{Concentration in solid (mg/Kg)} = \frac{C_{ex} * V_f}{W_i}$$

or

$$\text{Concentration in solid (µg/Kg)} = \frac{C_{ex} * V_f * 1000}{W_i}$$

where:

V_f = final extract volume in mL (includes any dilution volumes)
W_i = initial sample weight, in g.

For soil samples reported on dry weight basis, divide the Concentration by the decimal equivalent of the Percent Solids. For example: a sample contains 90% solids, thus

$$\text{Concentration in solid (mg/Kg) dry weight} = \frac{C_{ex} * V_f}{W_i * 0.90}$$

15.3 The procedure for uploading data into the LIMS system is detailed in SOP 1400 LIMS.

16. METHOD PERFORMANCE

Demonstration of Capability (DOC)

All parameters of interest must meet the method acceptance criteria before actual sample analysis begins. See SOP 1230 Training for the procedure to perform and document the DOC. The DOCs for the analysts performing this method are located in the analysts' training form folders located in the QA office files.

A quality control (QC) reference concentrate is required. For the single component Pesticides, the concentration is 0.25 µg/mL in acetone. For the PCBs 1016/1260, the concentration is 10 µg/mL in acetone. The sources of the QC reference samples are the ICV Stock Solutions listed in Section 10.9. The QC reference samples are made using stock standards prepared independently from those used for calibration.

For each analyte calculate the mean recovery (X) and standard deviation (s) and the average % Recovery (%R). Compare X and s and %R with the corresponding acceptance criteria for accuracy and precision, respectively. Note: For the single component Pesticides, X must be within 0.075 and 0.375 µg/L and s must be less than 0.0625 µg/L and %R must be within 30 and 150%. For the PCBs 1016/1260, X must be within 3.0 and 15 µg/L and s must be less than 2.5 µg/L and %R must be within 30 and 150%. These limits are taken from the EPA CLP Statement of Work (SOW) for Organic Analyses Revision OLM04.2 May 1999. If X and s and %R for all analytes meet the acceptance criteria, the system performance is acceptable and analysis of actual samples can begin. If any individual X or %R falls outside the range for accuracy or any individual s exceeds the precision limit, then the system performance is unacceptable for that analyte and corrective action must be taken.

Comparison to Reference Method Data

EPA Method 8000B provides guidance for the establishment of control limits for the LCS and MS QC samples. Recovery limits of 70% to 130% are provided as initial benchmarks for performance (8000B Section 8.5.4). These limits are designed for a wide variety of organic test methods. Individual analyte performance may vary. The control limits stated in Section 18 of this SOP are referenced from the CLP Statement of Work (SOW) for Organic Analyses Revision OLM04.2 May 1999.

In-House Control Limits

Method performance data is on file in the laboratory QC department. Comparison of method performance data for the laboratory to the reference method criteria occurs when laboratory in-house acceptance limits are generated. In-house generated data is compared to the specifications of the reference method. If the in-house limits are within the specifications of the reference method, the control limits are updated in LIMS. If the in-house limits are not within specifications, an investigation is performed to determine the cause(s) of the problem and a corrective action is completed. The analysis may continue until enough data points are collected to regenerate new control limits. Any QC data generated outside of reference method limits during that time frame, is flagged.

The laboratory maintains performance records to document the quality of data that is generated. Method accuracy for samples is assessed and records maintained. After the analysis of 20 laboratory control samples and surrogates, calculate the average percent recovery (R) and the standard deviation of the percent recovery (S).

Control limits for the method parameters are generated by the QC staff and distributed to the analysts via updates to the LIMS control charts. The control limits are calculated based on in-house performance data. At a minimum, these limits are updated annually.

17. POLLUTION PREVENTION

The preparation of excessive volumes of laboratory reagents and standards shall be avoided so that waste and potential for pollution are minimized. Samples, reagents and standards shall be disposed in compliance with the lab waste disposal program, SOP 1130. With the consent of the client, the samples may be returned to their origin for treatment.

Uncontaminated paper waste, glass and cans should be separated for recycling. Laboratory staff are required to protect the laboratory's and our clients' business information when disposing recycled paper or waste from the facility.

18. DATA ASSESSMENT AND CRITERIA FOR QUALITY CONTROL MEASURES

Data assessment includes review of: proper sample condition, preservation, and storage; analysis within holding time limitations; deviations from the SOP, evaluation of performance based or in-house control limits, reference method limits or project specific limits.

The laboratory must maintain records to document the quality of data that is generated. Ongoing data quality checks are compared with established performance criteria to determine if the results of analyses meet the performance characteristics of the method. When results of sample spikes indicate atypical method performance, a calibration verification standard is used to confirm the measurements were performed in an in-control mode of operation. The data review is conducted according to SOP 1250 Data Review.

18.1 Blanks

If the blank exceeds the RL (usually the lowest calibration standard or specifically defined in this test method SOP), the source of contamination must be investigated and corrective actions taken. The analyte concentrations in the method blank of an extraction batch must be less than the RL's listed in Attachment 1. If this criteria is exceeded, re-analyze the method blank. If after re-analysis, the blank criteria is still exceeded, then the entire extraction batch must be re-extracted. Always refer to a client specific QAPP for additional guidance.

Affected samples must be reprocessed and reanalyzed **or** Data must be appropriately qualified if:

1) The concentration of a targeted analyte in the blank is at or above the reporting limit as established by the SOP or by regulation, AND is greater than 1/10 of the amount measured in any sample.

2) The blank contamination otherwise affects the sample results as per the test method requirements or the individual project data quality objectives.

18.2 Laboratory Control Samples (LCS)

The results of the individual batch LCS are calculated in percent recovery (%R) and compared to established acceptance criteria from the EPA CLP Statement of Work (SOW) for Organic Analyses Revision OLM04.2 May 1999. If the LCS is outside the acceptance criteria, see Table 4 for current acceptance criteria, the analytical system is "out of control". Any affected samples associated with an out of control LCS must be reprocessed and reanalyzed or the results reported with appropriate data qualifiers. If after re-analysis the control criteria has not been met, the entire extraction batch must be re-extracted. Always refer to a client specific QAPP for additional guidance.

Table 4: LCS

Compound	Water % Recovery	Soil % Recovery
Alpha-BHC	30 – 150	30 – 150
Beta-BHC	30 – 150	30 – 150
Gamma-BHC	30 – 150	30 – 150
Delta-BHC	30 – 150	30 – 150
Heptachlor	30 – 150	30 – 150
Aldrin	30 – 150	30 – 150
Heptachlor Epoxide	30 – 150	30 – 150
Endosulfan I	30 – 150	30 – 150
Dieldrin	30 – 150	30 – 150
P,P'-DDE	30 – 150	30 – 150
Endrin	30 – 150	30 – 150
Endosulfan II	30 – 150	30 – 150
P,P'-DDD	30 – 150	30 – 150
Endrin Aldehyde	30 – 150	30 – 150
Endosulfan Sulfate	30 – 150	30 – 150
P,P'-DDT	30 – 150	30 – 150
Endrin Ketone	30 – 150	30 – 150
Methoxychlor	30 – 150	30 – 150
Alpha-Chlordane	30 – 150	30 – 150
Gamma-Chlordane	30 – 150	30 – 150
Chlordane, Technical	30 – 150	30 – 150
Toxaphene	30 – 150	30 – 150
Aroclor 1016	30 – 150	30 – 150
Aroclor 1260	30 – 150	30 – 150
Aroclors 1221, 1232, 1242, 1248, 1254	30 – 150	30 – 150

18.3 Surrogates

18.3.1 The results of the individual Surrogate compounds are calculated in percent recovery (%R) and are compared to established acceptance criteria from the CLP Statement of Work (SOW) for Organic Analyses Revision OLM04.2 May 1999. Surrogates outside the acceptance criteria, see Table 5 for current acceptance criteria, must be evaluated for the effect indicated for the individual sample results.

Table 5: Surrogates

Surrogate Compound	Water % Recovery	Soil % Recovery
Tetrachloro-m-xylene (TCMX)	30-150	30-150
Decachlorobiphenyl (DCB)	30-150	30-150

If surrogate recoveries are not within the established acceptance criteria, proceed as follows (SW-846 8000B):

1) Check to be sure that there are no errors in the calculations, surrogate solutions or internal standards. If errors are found, recalculate the data accordingly. Examine chromatograms for interfering peaks and integrated peak areas.

2) Check instrument performance. If an instrument performance problem is identified, correct the problem and re-analyze the extract (or re-analyze the sample for volatiles).

3) Some samples may require dilution in order to bring one or more target analytes within the calibration range or to overcome significant interferences with some analytes. This may result in the dilution of the surrogate responses to the point that the recoveries cannot be measured. If the surrogate recoveries are available from a less diluted or undiluted aliquot of the sample or sample extract, those recoveries may be used to demonstrate that the surrogates were within the QC limits, and no further action is required. However, the results of both the diluted and undiluted (or less-diluted) analyses should be provided to the data user.

4) If no instrument problem is found and if sufficient sample is available, the sample should be re-extracted and re-analyzed.

18.3.2 If, upon re-analysis (in either 2 or 4 above), the recovery is again not within limits, report the data as an "estimated concentration." If the recovery is within the limits in the re-analysis, provide the re-analysis data to the data user. If the holding time for the method has expired prior to the re-analysis, provide both the original and reanalysis results to the data user, and note the holding time problem.

18.4 Duplicates

The results from laboratory Duplicates are designed to assess the precision of analytical results in a given matrix and are expressed as relative percent difference (RPD). See the STAT QAM, Section 5.4 for the calculation for RPD. Results are compared to established acceptance criteria as listed in the MS/MSD tables 6 and 7. For duplicates results outside established criteria corrective action must be documented or the data reported with appropriate data qualifying codes.

For this test method, the analysis of the MS/MSD pair is used for determination of method precision. Duplicate LCS samples will be analyzed for all matrices where it would be impractical to perform a MS/MSD, such as wipe samples. Precision data from Tables 6 and 7 will be used for RPD acceptance criteria for LCS/LCSD.

18.5 Matrix Spikes

18.5.1 The results from MS/MSD are primarily designed to assess the precision and accuracy of analytical results in a given matrix and are expressed as percent recovery (%R) and relative percent difference (RPD). See the STAT QAM, Section 5.4 for the calculation for RPD. Results are compared to established acceptance criteria from the CLP Statement of Work (SOW) for Organic Analyses Revision OLM04.2 May 1999. For matrix spike results outside established criteria corrective action must be documented or the data reported with appropriate data qualifying codes.

18.5.2 Tables 6 and 7 show the compounds spiked, the levels and the current QC criteria for soils and water samples.

Table 6: Matrix Spikes - Soil

Compound	Amount added µg/Kg	RPD Limit	% Recovery
Alpha-BHC	8.0	25	30-150
Beta-BHC	8.0	25	30-150
Gamma-BHC	8.0	25	30-150
Delta-BHC	8.0	25	30-150
Heptachlor	8.0	25	30-150
Aldrin	8.0	25	30-150
Heptachlor Epoxide	8.0	25	30-150
Endosulfan I	8.0	25	30-150
Dieldrin	8.0	25	30-150
P,P'-DDE	8.0	25	30-150
Endrin	8.0	25	30-150
Endosulfan II	8.0	25	30-150
P,P'-DDD	8.0	25	30-150
Endrin Aldehyde	8.0	25	30-150
Endosulfan Sulfate	8.0	25	30-150
P,P'-DDT	8.0	25	30-150
Endrin Ketone	8.0	25	30-150
Methoxychlor	8.0	25	30-150
Alpha-Chlordane			
Gamma-Chlordane			
Chlordane, Technical			
Toxaphene			
Aroclor 1016	330	25	30-150
Aroclor 1260	330	25	30-150
Aroclors 1221, 1232, 1242, 1248, 1254			

Table 7: Matrix Spikes - Water

Compound	Amount added µg/L	RPD Limit	% Recovery
Alpha-BHC	0.50	25	30-150
Beta-BHC	0.50	25	30-150
Gamma-BHC	0.50	25	30-150
Delta-BHC	0.50	25	30-150
Heptachlor	0.50	25	30-150
Aldrin	0.50	25	30-150
Heptachlor Epoxide	0.50	25	30-150
Endosulfan I	0.50	25	30-150
Dieldrin	0.50	25	30-150
P,P'-DDE	0.50	25	30-150
Endrin	0.50	25	30-150
Endosulfan II	0.50	25	30-150

P,P'-DDD	0.50	25	30-150
Endrin Aldehyde	0.50	25	30-150
Endosulfan Sulfate	0.50	25	30-150
P,P'-DDT	0.50	25	30-150
Endrin Ketone	0.50	25	30-150
Methoxychlor	0.50	25	30-150
Alpha-Chlordane			
Gamma-Chlordane			
Chlordane, Technical			
Toxaphene			
Aroclor 1016	20	25	30-150
Aroclor 1260	20	25	30-150
Aroclors 1221, 1232, 1242, 1248, 1254			

18.6 Other

The laboratory will analyze standard reference materials and participate in relevant performance evaluation studies quarterly.

19 CORRECTIVE ACTIONS FOR OUT-OF-CONTROL DATA

The process for handling unacceptable and out of control data is found in SOP 230 Corrective Action.

If the CCV, MB,LCS/LCSD, MS/MSD, lab duplicate, surrogate, or [some other QC sample] recovery of any parameter falls outside the designated acceptance range, the laboratory performance for that parameter is judged to be out of control, and the problem must be immediately identified and corrected. The analytical result for that parameter in the samples is suspect and is only reported for regulatory compliance purposes with the appropriate corrective action form. Immediate corrective action includes reanalyzing all affected samples by using any retained sample before the expiration of the holding time. Final data results must be qualified in the client report for reported results not meeting the laboratory defined criteria.

1) Review standards preparation logbooks. Check all calculations and ensure dilution factors are properly recorded.
2) Re-prepare the suspected standard or QC sample to identify possible preparation errors of the standard or QC sample.
3) Re-Analyze the samples when the CCV or LCS are not within acceptable limits.
4) Perform routine preventative maintenance following manufacturer's specification. Record all maintenance in the instrument logbook.

20 CONTINGENCIES FOR HANDLING OUT-OF-CONTROL OR UNACCEPTABLE DATA

Every effort is made to prevent problems from occurring. When out of control or unacceptable data occurs the first option is to identify the problem and reanalyze the samples within the holding times. When this is not possible, the QA Manager and/or the Laboratory Director reviews data and discusses options with the client. Reanalysis or reporting the data with qualification are alternatives. Out of control or unacceptable data reported to the client must include the data qualifier, flag and discussion on the rationale for reporting.

Holding time exceedence, improper preservation and improper sample condition or storage are noted on the corrective action form and included on the final report.

Review the CCV standard response, LCS result, and surrogate recovery for acceptable performance for each batch of samples. Record any trends or unusual performance on a corrective action form. Final data results must be qualified in the client report for results not meeting the laboratory defined criteria.

Manual integration must be minimized for standards, reagent blanks and surrogates. Routine manual integration of the same parameters indicates a system performance problem. Correct this problem or note in the instrument analysis logbook the suspected causes for routine manual integration. Sign and date all manually integrated chromatograms.

20.1 The process for handling unacceptable and out of control data is found in the Laboratory QAM Section 11. The reporting of data that is out of control must be approved and documented by Quality Assurance Manager and either the Technical Manager or the Laboratory Director.

20.2 Client Requested Modifications:

20.2.1 Clients must request modifications from the laboratory SOP in writing to the lab.

20.2.2 The lab director, technical manager and quality assurance manager will evaluate the requested client deviations, determine the feasibly of the deviation and the potential effects on the data.

20.2.3 If it is determined that the lab will perform the requested deviations, lab director, technical manager and quality assurance manager will decide if a method validation study is required.

20.2.4 The designated project manager will retain all documentation concerning the requested deviation, including all correspondence with the client, in the client folder.

20.2.5 The final analytical report must include the statement "*This report has analyses performed using client requested modifications*".

21 WASTE MANAGEMENT

The STAT Analysis Corporation Waste Disposal SOP 1130 identifies proper waste management practices for the chemicals and biological materials used in this procedure. Samples are stored and discarded accordance with SOP 1130 Waste Disposal.

22 REFERENCES

22.1 Method 8081A and 8082, Revision 3, December 1996; U.S. EPA SW-846 "Test Methods for Evaluating Solid Waste, Physical/Chemical Methods" Update III, December 1996
22.2 STAT SOPs for sample prep: 3030, 3040, 3210, 3050
22.3 STAT Extract Cleanup SOPs: 3060, 3330
22.4 STAT SOPs: 4050, 1210 [support equipment, recordkeeping, MDLs, etc]
22.5 SOP 230 Corrective Actions
22.6 SOP 1010 Standard and Reagent Preparation
22.7 SOP 1400 LIMS
22.8 SOP 1130 Waste Disposal
22.9 SOP 003 Chemical Hygiene Plan
22.10 SOP 1250 Data Review

22.11 Manufacturers' Equipment Instruction Manuals
22.12 SOP 1255 Manual Integration
22.13 SW-846 8000B Determinative Chromatographic Separations
22.14 SOP 1230 Training
22.15 "USEPA Contract Laboratory Program Statement of Work for Organic Analysis" Revision OLM04.2 May 1999, U. S. Environmental Protection Agency. Office of Solid Waste, Washington DC 20460.

23 FORMS, FIGURES, TABLES, DIAGRAMS, FLOWCHARTS, ATTACHMENTS OR VALIDATION DATA

Attachment 1: MDLs and Reporting Limits
Attachment 2: Retention Times
Attachment 3: Procedure for Establishing Retention Time Windows

ATTACHMENT 1: MDLs and Reporting Limits

MDLs and REPORTING LIMITS for SEMIVOLATILE COMPOUNDS (Attachment 1)

CASN	Compounds	MDL (µg/L)	RL (µg/L)	RL (mg/L)	MDL (µg/Kg)	RL (µg/Kg)	RL (mg/Kg)
309-00-2	Aldrin	0.020	0.050	0.00005	0.002	0.008	0.000008
319-84-6	Alpha-BHC	0.020	0.050	0.00005	0.002	0.008	0.000008
319-85-7	Beta-BHC	0.020	0.050	0.00005	0.002	0.008	0.000008
319-86-8	Delta-BHC	0.020	0.050	0.00005	0.002	0.008	0.000008

58-89-9	Gamma-BHC (Lindane)	0.020	0.050	0.00005	0.002	0.008	0.000008
72-55-9	P,P'-DDE	0.020	0.100	0.0001	0.002	0.008	0.000008
72-54-8	P,P'-DDD	0.040	0.100	0.0001	0.002	0.008	0.000008
50-29-3	P,P'-DDT	0.020	0.100	0.0001	0.002	0.008	0.000008
60-57-1	Dieldrin	0.010	0.100	0.0001	0.002	0.016	0.000016
959-98-8	Endosulfan I	0.010	0.050	0.00005	0.002	0.008	0.000008
33212-65-9	Endosulfan II	0.010	0.100	0.0001	0.002	0.016	0.000016
1031-07-8	Endosulfan Sulfate	0.100	0.100	0.0001	0.002	0.016	0.000016
72-20-8	Endrin	0.010	0.100	0.0001	0.002	0.016	0.000016
7421-93-4	Endrin Aldehyde	0.050	0.100	0.0001	0.002	0.016	0.000016
53494-70-5	Endrin Ketone	0.030	0.100	0.0001	0.002	0.016	0.000016
76-44-8	Heptachlor	0.030	0.050	0.00005	0.002	0.008	0.000008
1024-57-3	Heptachlor Epoxide	0.010	0.050	0.00005	0.002	0.008	0.000008
72-43-5	Methoxychlor	0.020	0.500	0.0005	0.002	0.080	0.00008
5103-71-9	Alpha-Chlordane	0.025	0.500	0.0005	0.002	0.008	0.000008
5103-74-2	Gamma-Chlordane	0.025	0.500	0.0005	0.002	0.008	0.000008
57-74-9	Chlordane, Technical	0.025	0.500	0.0005	0.002	0.080	0.00008
8001-35-2	Toxaphene	1.000	1.000	0.001	0.002	0.160	0.00016
12674-11-2	Aroclor 1016	0.100	0.500	0.0005	0.010	0.080	0.00008
11104-28-2	Aroclor 1221	0.100	1.0	0.0005	0.010	0.160	0.00008
11141-16-5	Aroclor 1232	0.100	0.500	0.0005	0.010	0.080	0.00008
53469-21-9	Aroclor 1242	0.100	0.500	0.0005	0.010	0.080	0.00008
12672-29-6	Aroclor 1248	0.100	0.500	0.0005	0.010	0.080	0.000008
11097-69-1	Aroclor 1254	0.100	0.500	0.001	0.010	0.080	0.00016
11096-82-5	Aroclor 1260	0.100	0.500	0.001	0.010	0.080	0.00016

ATTACHMENT 2: Retention Times

RETENTION TIMES for SINGLE RESPONSE COMPOUNDS

#	Compounds	Retention Time (min.) Column 1	Retention Time (min.) Column 2
1	TCMX (surrogate)	7.89	6.37
2	Alpha-BHC	9.26	7.68
3	Gamma-BHC (Lindane)	9.89	8.37
4	Beta-BHC	10.02	8.56
5	Delta-BHC	10.47	8.88
6	Heptachlor	10.56	9.22
7	Aldrin	11.01	9.69
8	Heptachlor Epoxide	11.71	10.55
9	Gamma-Chlordane	11.93	10.71
10	Alpha-Chlordane	12.09	10.87
11	Endosulfan I	12.16	11.03
12	P,P'-DDE	12.25	10.99
13	Dieldrin	12.46	11.31
14	Endrin	12.78	11.57
15	P,P'-DDD	12.84	11.65
16	Endosulfan II	12.99	11.82
17	P,P'-DDT	13.15	11.94
18	Endrin Aldehyde	13.31	12.26
19	Methoxychlor	13.78	12.43
20	Endosulfan Sulfate	13.58	12.69
21	Endrin Ketone	14.15	12.96
22	DCB (surrogate)	15.62	13.87

ATTACHMENT 3:

PROCEDURE for ESTABLISHING RETENTION TIME WINDOWS EPA METHOD 8000B SECTION 7.6 (Attachment 3)

7.6 Retention time windows are crucial to the identification of target compounds. Retention time windows are established to compensate for minor shifts in absolute retention times as a result of sample loadings and normal chromatographic variability. The width of the retention time window should be carefully established to minimize the occurrence of both false positive and false negative results. Tight retention time windows may result in false negatives and/or may cause unnecessary reanalysis of samples when surrogates or spiked compounds are erroneously not identified. Overly wide retention time windows may result in false positive results that cannot be confirmed upon further analysis.

7.6.1 Before establishing retention time windows, make sure that the chromatographic system is operating reliably and that the system conditions have been optimized for the target analytes and surrogates in the sample matrix to be analyzed. Make three injections of all single component standard mixtures and multi-component analytes (such as PCBs) over the course of a 72-hour period. Serial injections or injections over a period of less than 72 hours may result in retention time windows that are too tight.

7.6.2 Record the retention time for each single component analyte and surrogate to three decimal places (e.g., 0.007). Calculate the mean and standard deviation of the three absolute retention times for each single component analyte and surrogate. For multi-component analytes, choose three to five major peaks (see the determinative methods for more details) and calculate the mean and standard deviation of those peaks.

7.6.3 If the standard deviation of the retention times for a target compound is 0.000 (i.e., no difference between the absolute retention times), then the laboratory may either collect data from additional injections of standards or use a default standard deviation of 0.01 minutes. (Recording retention times to three decimal places rather than only two should minimize the instances in which the standard deviation is calculated as 0.000).

7.6.4 The width of the retention time window for each analyte, surrogate, and major constituent in multi-component analytes is defined as ± 3 times the standard deviation of the mean absolute retention time established during the 72-hour period. If the default standard deviation in Sec. 7.6.3 is employed, the width of the window will be 0.03 minutes.

7.6.5 Establish the center of the retention time window for each analyte and surrogate by using the absolute retention time for each analyte and surrogate from the calibration verification standard at the beginning of the analytical shift. For samples run during the same shift as an initial calibration, use the retention time of the mid-point standard of the initial calibration.

7.6.6 The laboratory must calculate absolute retention time windows for each analyte and surrogate on each chromatographic column and instrument. New retention time windows must be established when a new GC column is installed. The retention time windows should be reported with the analysis results in support of the identifications made.

7.6.7 If the instrument data system is not capable of employing compound-specific retention time windows, then the analyst may choose the widest window and apply it to all compounds. As noted above, other approaches may also be employed, but must be documented by the analyst.

7.6.8 The surrogates are added to each sample, blank, and QC sample and are also contained in each calibration standard. Although the surrogates may be diluted out of certain sample extracts, their retention times in the calibration standards may be useful in tracking retention time shifts. Whenever the observed retention time of a surrogate is outside of the established retention time window, the analyst is advised to determine the cause and correct the problem before continuing analyses.

STAT Analysis Corporation:

STANDARD OPERATING PROCEDURE 4080

CHLOROPHENOXY HERBICIDES BY HPLC (EPA Method 8321A)

Revision 00
Effective Date: August 16, 2004

Author: Jeremiah Favero

Printed Name	Signature/Date
Jeremiah Favero Organic Manager	_____
Laurie Fetterman QA Manager	_____
Dennis Jachim Technical Manager	_____
Thomas M. Bauer Laboratory Director	_____

This Standard Operating Procedure has been prepared for the sole use of STAT Analysis Corporation.

Copy Number: _____

The absence of a Copy Number indicates this is an uncontrolled copy of the document supplied for information only.

Table of Contents

Title Page 1
Table of Contents 2
1. Identification of Test Method 3
2. Applicable Matrix or Matrices 3
3. Detection Limits 3
4. Scope and Application 3
5. Summary of Test Method 4
6. Definitions 4
7. Interferences 4
8. Safety 4
9. Equipment and Supplies 4
10. Reagents and Standards 5
11. Sample Collection, Preservation, Shipment and Storage 8
12. Quality Control 8
13. Calibration and Standardization 10
14. Procedure 13
15. Data Reduction, Calculations and Loading 18
16. Method Performance 19
17. Pollution Prevention 20
18. Data Assessment and Criteria For Quality Control Measures 20
19. Corrective Actions for Out-Of-Control Data 25
20. Contingencies for Handling Out-Of-Control Or Unacceptable Data 25
21. Waste Management 26
22. References 26
23. Forms, Figures, Tables, Diagrams, Flowcharts, Attachments or Validation Data 27
Attachment 1. MDL's And Reporting Limits for Herbicide Compounds 28

1.0 IDENTIFICATION OF TEST METHOD

SOP Title: Chlorophenoxy Herbicides by HPLC (EPA Method 8321A).

2.0 APPLICABLE MATRICES

Methylene chloride, ether and organic solvent extracts from soil, sediment, ground and surface water, and mobility extracts are analyzed using this method.

3.0 DETECTION LIMITS

The lab follows the procedure found in 40CFR Part 136B to determine the MDL for each matrix type on an annual basis. See the STAT Analysis SOP 1210 Method Detection Limits for the MDL procedure, frequency and acceptance criteria. The MDL's measured by the lab and all supporting documentation are in the laboratory QA files for review.

The laboratory determined MDL must always be less than the reporting limit (RL), which may be determined by the lowest calibration standard. The RL's will usually range from three to ten times the laboratory measured MDL's but this relationship may vary depending upon dilution of sample aliquots, matrix interferences, moisture adjustments (in solid samples), or method-specified requirements. Attachment 1 contains the current MDLs and reporting limits (RL's) for this SOP.

4.0 SCOPE AND APPLICATION

4.1 This standard operating procedure describes in detail the precise methods used at STAT Analysis Corporation for the analysis of environmental samples for Chlorophenoxy Herbicides by HPLC. This SOP as written is to be applied when SW-846 Method 8321A is requested. This SOP is used to determine the concentration of herbicides in extracts prepared from all types of solid waste matrices, soils, and ground water.

4.2 This SOP can be used to quantitate herbicides that are soluble in methylene chloride, ether and other organic solvents and are capable of being eluted without derivatization as sharp peaks from a liquid chromatographic column. See Attachment 1 for a list of compounds that have been evaluated on the specified HPLC system.

4.3 The reporting limits (RL's) for this SOP are shown in Attachment 1 for soils and water. RL's will be proportionately higher for sample extracts and samples that require dilution or reduced sample size to avoid saturation of the detector.

4.4 This method is restricted to use by or under the supervision of analysts experienced in the use of a High Performance Liquid Chromatograph (HPLC) and skilled in the interpretation of chromatograms. Each analyst must demonstrate the ability to generate acceptable results with this method.

5.0 SUMMARY OF TEST METHOD

5.1 Prior to using this method, the samples must be prepared for the HPLC using the appropriate sample preparation and cleanup SOPs (Section 14.1). Solid samples are extracted at acidic pH with methylene chloride. Aqueous samples are extracted at acidic pH with ether. This method describes chromatographic conditions that will allow for the separation of the compounds in the extract and for their qualitative and quantitative analysis by high performance liquid chromatography. Identification of target analytes is accomplished by comparing component retention times to those of authentic standards. Quantitation is accomplished by comparing the response of the peak area using a five-point calibration curve.

5.2 **Method Modifications from Reference** – A daily Continuing Calibration Verification (CCV) must be analyzed on the same day as analysis of samples. EPA Method 8321A requires that a calibration curve be generated on the same day as analysis. This SOP is based on EPA Method 8321A except that only the chlorinated phenoxyacid compounds are reported. This lab does not report the other compounds.

6.0 DEFINITIONS

The STAT Analysis Quality Manual Section 19.0 contains all the definitions of standard terms used in SOPs.

7.0 INTERFERENCES

7.1 Raw HPLC data from all blanks, samples, and spikes must be evaluated for interferences. Determine if the source of interference is in the preparation and/or cleanup of the samples and take corrective action to eliminate the problem.

7.2 Contamination by carryover can occur whenever high-concentration and low-concentration samples are sequentially analyzed. To reduce carryover, the sample syringe must be rinsed out between samples with solvent. Whenever an unusually concentrated sample is encountered, the sample after it must be reanalyzed to check for cross contamination.

8.0 SAFETY

Methylene chloride is a suspected carcinogen as are numerous compounds analyzed by this method. Ether is extremely flammable and an anesthetic. Only use ether in a properly functioning fume hood. Proper personal protective equipment including safety glasses, nitrile gloves and a lab coat are required during different parts of this method. Other safety precautions must be conducted in accordance with the SOP 003 Chemical Hygiene Plan. Other actions can also be applied if deemed necessary. A reference file of Material Safety Data Sheets (MSDS) is available to all personnel involved in this method.

9.0 EQUIPMENT AND SUPPLIES

The following apparatus is recommended for performing this procedure. Equivalent items can be used, if with their use, the analytical and QA/QC requirements in this SOP can be met. All catalog numbers in this SOP are current as of the effective date and thereafter subject to change.

9.1 High Performance Liquid Chromatography System

9.1.1 Liquid Chromatograph(LC) – Agilent 1100 with a Vacuum Degasser (G1322A), Quarternary Pump (G1311A), Autosampler (G1313A), Fluorescence Detector (G1321A), Variable Wavelength Detector (G1314A) and a Column Heater (G1316A)

9.1.2 Column – 50m x 4.6mm, 3 µm particle size, (Restek Ultra Aqueous C18, Cat# 9178355)

9.1.3 Data system - An Agilent Kayak computer system using Chemstation for LC Version A.09.03 [1417] to collect data is attached to the LC. An Agilent Kayak computer system using ChemStation version C.00.00 is used to quantitate the data.

9.2 Micro syringes - 10 µL, 25 µL, 100 µL, 250 µL, 500 µL and 1,000 µL.

9.3 Volumetric flasks, Class A - 10 mL, 25 mL, 50 mL with ground glass stoppers.

9.4 Glass vials - 2-mL, for GC auto sampler with Teflon-lined screw caps or crimp tops.

9.5 Amber glass vials - 10 mL with Teflon-lined screw caps

10.0 REAGENTS AND STANDARDS

The following reagents and standards are required to perform this procedure. When instructions are given on how to prepare a specific volume of a reagent or standard, larger or smaller volumes can be prepared as needed so long as the final concentrations remain the same. Any other deviations from the reagents or standards listed in this SOP could be detrimental to the quality of the data produced. Such deviations would have to be approved and documented (see SOP QA 230 Corrective Action). Equivalent items can be used, if with their use, the analytical and QA/QC requirements in this SOP can be met.

Instructions for labeling and record keeping of reagents and standards are contained in SOP 1010 Analytical Standards and Reagents Receipt and Preparation.

10.1 Analytical reagent grade chemicals shall be used in all tests. Unless otherwise indicated, all reagents shall conform to the specifications of the Committee on Analytical Reagents of the American Chemical Society, where such specifications are available.

10.2 Standards

10.2.1 At least one of the standards must be traceable to a NIST traceable source when available. The manufacturer should include a certificate of analysis for each standard. If one is not provided, contact the manufacturer. Retain all certificates in the designated binder (see SOP 1010 Analytical Standards and Reagents Receipt and Preparation).

10.2.2 Standards must be prepared volumetrically using class-A volumetric glassware, calibrated micropipettes, or gas tight syringes. Do not use disposable pipettes to prepare standards.

10.2.3 The use of alternative standards will be allowed as long as the analytical and quality objectives of this SOP can be met.

10.3 Organic-free reagent water - All references to water in this SOP refers to Type II reagent water (in-house system).

10.4 Mobile Phase – Phosphoric Acid solution 0.05%. Prepare by adding 50 mL of 10% Phosphoric Acid (VWR Catalog # VW-3346-1) to a 1000 ml volumetric flask. Dilute to volume with reagent water. Store at room temperature.

10.5 Stock Standard solutions - Standard solutions can be prepared from pure standard materials or purchased as certified solutions (e.g. SV standards). The routine laboratory practice is to purchase these standards from approved vendors. The standards used are: Chlorinated Acids by HPLC, Mix A (Restek Catalog # 32431), Chlorinated Acids by HPLC, Mix B (Restek Catalog # 32430), Herbicide Mix #2 (Restek Catalog # 32056) and Herbicide Surrogate Mix (Restek Catalog # 32049). Stock standard solutions and QC solutions are stored at < -10°C and must be replaced after six months, or sooner if comparison with quality control check samples indicates a problem. Different storage conditions and expiration dates of other solutions are noted as warranted.

10.5.1 Secondary Stock Standard Solution – This solution is made using the individual Stock Standard solutions. Using microliter syringes, the following amounts of each Stock Standard solution is injected into a 10 mL volumetric flask. The solution is brought to volume with acetonitrile. The final concentration of each component is listed in Table 1.
Note: this Secondary Stock Standard solution is also used as the high-level calibration standard. It is also the source solution to prepare the calibration standards in Section 10.6. This standard is stored at < -10°C in a 10 mL amber screw cap vial equipped with a Teflon lined cap. It is freshly prepared every six months, or sooner if check standards indicate a problem.

Table 1 Secondary Stock Standard Solution

Stock Solution	Conc. Stock (µg/ml)	Vol. Stock (µL)	Final Conc. (µg/ml)
Chlorinated Acids, Mix A	1000	100	10
Chlorinated Acids, Mix B	1000	100	10
Herbicide Mix #2, Dalapon	2000	500	100
Herbicide Surrogate Mix	200	500	10

10.6 Calibration standards - A minimum of five calibration standards are prepared. The low standard is the RL and above the MDL. The others define the working range of the LC system. Calibration standards in current use: 0.1, 0.5, 1.0, 5.0, 7.5 and 10.0 µg/ml. (Table 2). Using microliter syringes, the following amount of the Secondary Stock solution is injected into a 1 ml syringe. The solution is brought to volume with methanol. The final concentration of each component is listed in Table 2. Each solution is transferred to an autosampler vial. Storage is as indicated in 10.5.1. The continuing calibration verification standards (CCV) are prepared weekly and stored at 4°C. Levels 2, 3 and 4 (0.5, 1.0, 5.0 µg/mL) are used for the CCVs.

Table 2 Calibration Standards

Level	Volume (µL) Secondary Stock	Volume (µL) Acetonitrile	Final Concentration (µg/ml)
1	10	990	0.1 (1.0)
2	50	950	0.5 (5.0)
3	100	900	1.0 (10.0)
4	500	500	5.0 (50.0)
5	750	250	7.5 (75.0)
6	1000	----	10.0 (100.0)

( ) Concentration of Dalapon

10.7 Laboratory Control Sample/Matrix Spike standards - The LCS/matrix spike compounds listed in Table 3. Samples will be spiked at 1.0 ug/sample, 0.033 mg/Kg for soil and 0.001 mg/L for water (see SOP 3500 for LCS/Matrix Spike Solution preparation). This standard is stored at < -10°C in an amber glass vial with a Teflon lined screw cap.

Table 3. ICV Secondary Stock (LCS/MS/MSD)Standard Solution

Compound	Conc. Stock (µg/ml)	Vol. Stock (µL)	Final Conc. (µg/ml)
2,4-D	100	100	1.0
2,4-DB acid	100	100	1.0
Dalapon	1000	100	10.0
Dicamba	100	100	1.0
Dichlorprop	100	100	1.0
Dinoseb	100	100	1.0
MCPA	100	100	1.0
MCPP	100	100	1.0
Pentachlorophenol	100	100	1.0
Picloram	100	100	1.0
2,4,5-T	100	100	1.0
2,4,5-TP (Silvex)	100	100	1.0

10.8 Surrogate Standard – The surrogate standard is 2,4-dichlorophenyl acetic acid. Surrogate stock solution is purchased from AccuStandard (Cat. No. 5-ACES-8150B-SS, store at room temp until dilution is prepared). The spike solution is prepared by diluting 1000 µL of the stock standard into a 100mL volumetric flask. The flask is diluted to the mark with acetone for a final concentration of 1.0 µg/mL. All samples, blanks, LCS's, and MS/MSDs are spiked with 1.0 mL of the surrogate spike solution prior to extraction. This standard is stored at < -10°C in an amber glass vial with a Teflon lined screw cap.

10.9 Initial Calibration Verification Standard – A standard prepared from a different source at the midpoint of the calibration to verify the initial calibration. The solution is made using the custom ICV Stock Standard solution (Supelco Catalog # 20481237). Using microliter syringes, 100 µl of Stock Standard solution is injected into a 10 mL volumetric flask. The solution is brought to volume with acetonitrile. The final concentration of each component is listed in Table 3. This standard is stored at < -10°C.

10.10 Acetone, hexane, acetonitrile, methanol, diethyl ether and other appropriate solvents, pesticide quality or equivalent.

11.0 SAMPLE COLLECTION, PRESERVATION, AND HANDLING

11.1 Containers used to collect samples for the determination of herbicides are glass: 1 Liter bottles for water samples and various sizes of jars for soil samples. They are equipped with screw caps with Teflon liners. Water samples containing residual chlorine should be field treated to remove the chlorine prior to collection. Plastic containers or lids may NOT be used for the storage of samples due to the possibility of sample contamination from the phthalate esters and other hydrocarbons within the plastic.

11.2 Samples must be stored under refrigeration at between 0.1 and 6.0°C. Extraction must be within 7 days from sampling date for water and 14 days for solids. Sample extracts are stored in the dark at between 0.1 and 6.0°C and must be analyzed within 40 days of extraction.

11.3 No chemical preservation is required for this method.

11.4 All samples are stored away from all standards, reagents, food, and other potentially contaminating sources in order to prevent cross contamination.

12.0 QUALITY CONTROL

The following details the QC requirements that apply to this analysis. Each Quality Control Indicator (QCI) provides information pertaining to either method or individual sample performance. Our goal is to produce defensible data of known and documented quality. The results of these Quality Control Indicator samples are used to assess the acceptability of data.

12.1 Blanks

Method Blank analysis is performed to determine if any contamination is present in the analytical process and is used to evaluate acceptance of the batch of samples. A method blank shall be prepared once per preparation batch of 20 or less samples per matrix type. If more than 20 samples are prepared a second blank shall be prepared after the twentieth sample. The method blank shall be processed through all preparatory steps used for the samples, including cleanup procedures. The blank shall be analyzed using the same instrument and conditions as the samples.

The Solvent Blank, clean acetonitrile injected into the HPLC, is used to monitor the HPLC system for potential cross-contamination from one sample to another or for residual contamination in the system.

12.2 Calibration Verification

An Initial Calibration Verification (ICV) standard containing all of the target analytes reported in this method (Attachment 1) shall be analyzed immediately after the completion of the initial calibration. The ICV shall be purchased from a second source to verify analyte concentrations.

12.3 Laboratory Control Sample (LCS)

The LCS is used to evaluate the performance of the total analytical system, including all preparation and analysis steps. The LCS shall be prepared once per preparation batch of 20 or less samples per matrix type. If more than 20 samples are prepared a second LCS shall be prepared after the twentieth sample. The LCS shall be processed through all preparatory steps used for the samples, including cleanup procedures. The LCS shall be analyzed using the same instrument and conditions as the samples. Refer to section 10.7 for LCS analytes and concentrations.

12.4 Surrogate

The surrogate used for this method is added to all samples, standards, and blanks. Refer to section 10.8 for preparation and concentration instructions.

12.5 Duplicates

Duplicates of field samples or of the LCS must be prepared in compliance with the method requirements and client directives. Duplicate LCS's are prepared for sample wipes. It would be impractical to prepare a matrix spike and matrix spike duplicate. Reproducibility performance would be the same as for a matrix spike/matrix spike duplicate.

12.6 Matrix Spike and Matrix Spike Duplicate (MS/MSD)

MS/MSD's indicate the effect of the sample matrix on the precision and accuracy of the results generated using the selected method. This information does not determine the validity of the entire batch. MS/MSDs must be analyzed at a minimum of 1 per 20 samples per matrix per preparation procedure, or one per preparation batch, or as specified by the required test method. For cases where the sample cannot be divided (e.g., wipes, air samples, not enough sample provided by customer) and thus a MS/MSD pair cannot be prepared in the preparation batch, an LCS/LCSD pair is prepared and analyzed to measure precision.

Samples chosen for matrix spiking are rotated among different clients and/or different client projects. This is accomplished through communication between the Department Manager and the analyst. In addition, designated samples, as indicated by client request or contract requirement, are matrix spiked. The MS/MSD pair shall be processed through all preparatory steps used for the samples. They shall be analyzed using the same instrument and conditions as the samples. Refer to section 10.7 for MS analytes and concentrations. Some clients may require different spiking levels and/or target analytes; these specific needs are documented on the request for analysis forms.

13.0 CALIBRATION AND STANDARDIZATION

13.1 Initial Calibration (ICAL)

13.1.1 Analyze 10 µL of each calibration standard and tabulate the area of the analyte against concentration for each compound. Calculate calibration factors (CF's) for each compound in each calibration standard as follows:

$$CF = \frac{A_x}{C_x}$$

where:

A_x = Area of the compound being measured.

C_x = Concentration of the compound being measured (ng/µL = µg/mL = mg/L).

13.1.2 Calculate the average response factor ($\overline{CF}$) for each compound as follows:

$$\overline{CF} = (\Sigma\ CF_1 \text{ to } CF_n)/n$$

where: CF = CF for each of the calibration levels (i.e., 6)
n = Number of RF values (i.e., 6)

13.1.3 Calibration Check Compound (CCC) responses are monitored to check the integrity of the system. The CCCs are all compounds reported by this method. Refer to Attachment 1 for a complete compound list.

Using the CF's from the initial calibration, calculate the percent relative standard deviation (%RSD) for the Calibration Check Compounds (CCC).

To calculate %RSD: $\%RSD = 100\% \times SD/\overline{CF}$

where:

%RSD = % Relative Standard Deviation

$\overline{CF}$ = average of initial CFs for a compound

SD = standard deviation (n-1) of average CFs for a compound

To calculate Standard Deviation (n-1 degrees of freedom)

$$SD = \sum_{i=1}^{N} \sqrt{\frac{(CF_i - \overline{CF})^2}{n-1}}$$

where: CF_i =CF for each of the 6 calibration levels
n = Number of RF values (i.e., 6)

13.1.4 Linearity - If the %RSD of any compound is 20% or less, then the relative response factor is assumed to be constant over the calibration range, and the average relative response factor is used for quantitation. If the %RSD is greater than 20%, use first order linear regression. The calibration curve must meet the requirements for curve fitting listed in SW-846 8000B and the correlation coefficient is ≥ 0.99. The equation is not forced through the origin.

13.1.5 Retention Times: The Retention Times (RT) of each compound in each calibration standard should be within ± 0.03 RT units.

13.1.6 Before sample analysis can begin, a Initial Calibration Verification (ICV) (see Sec. 10.9) must be performed. The ICV results must be within the acceptance criteria as established for the CCV compounds (Section 13.2).

NOTES:

1. All calibration curves must have a unique identifier. It is recommended that the calibration date be incorporated into the identifier for easy reference.
2. Calibration must be completed (all standard levels analyzed) within 24 hours or the entire calibration sequence must be repeated.
3. All initial calibration standards must be analyzed as a group. No field sample analyses are allowed during the calibration sequence.
4. Do not add calibration standards and update the curve after the original calibration date.
5. Multiple analyses of the same calibration level are not allowed to be included in the calibration curve.
6. Compound responses cannot be selected from different analyses of the same calibration level (i.e. all compound responses for level 1 must come from the same data file).
7. If more than five calibration levels are analyzed, it is permissible to either drop the low compound concentration (poor response) or the high compound concentration (detector saturation). It is not allowed to drop a point in the middle of the curve.
8. If more than five calibration levels are analyzed, it is permissible to drop an entire level if the analyst can document a specific reason or reasons why that level should be excluded. Mechanical failures, significant loss of all analyte responses possibly due to poor technique in standard preparation, or software malfunction during data acquisition (system did not acquire all compound data) are plausible reasons. The reason must be justified and documented. The supervisor should review this situation and approve the analyst's decision.
9. The need to analyze more than two analyses of the same calibration level indicates a potential problem with the secondary stock solution. Prepare a fresh secondary stock solution and repeat all calibration levels. It is recommended that all calibration standard levels come from the same secondary stock solution.
10. Manual integration must only be used if the software fails to properly integrate the peak. If manual integration is used for a particular compound, all levels of that compound do not have to be manually integrated, but all levels must be integrated in a similar manner. Example: the computer generated integration of a compound in the low level standard is not technically sound. A manual integration of the compound is performed (due to baseline noise, etc) in order to achieve a technically sound integration. Other levels of the compound are integrated correctly by the computer. The manual integration of the low level must match, as best as possible, the computer generated integrations for all other levels.

11. If any compound in the mid-point level is manually integrated, the integration of this compound must be reviewed for every continuing calibration standard and QC check solution (i.e. LCS, and Matrix Spike) to ensure that the integration is the same as the manual integration performed in the initial calibration (ICAL) mid-point. A consistent manner of integration must be achieved.
12. All manual integrations must be reviewed and approved at the supervisory level.

13.2 Continuing Calibration Verification (CCV)

13.2.1 A continuing calibration verification (CCV) sample is analyzed before samples and after every 20 samples during analysis. Different standards are analyzed for the CCV such that a wider range of the calibration curve is verified. For example: on successive days analyze the 1 µg/mL, then the 5 µg/mL and on the third day, the 7.5 µg/mL standard solution. Compare the response factors of the with the following criteria:

13.2.1.1 Control limits for the CCC compounds are ± 20% difference from the ICAL Response Factor (RF) if the average RF is used for quantitation, or ± 20% drift from the true concentration of the CCV compound if linear regression is used.

13.2.1.2 If the CCV results obtained are outside the acceptance criteria, corrective actions must be performed. If routine corrective actions fail to produce an acceptable *second consecutive (immediate)* CCV, then either the lab has to demonstrate performance after corrective action with two consecutive successful CCVs, or a new ICAL must be performed. If the instrument has not demonstrated acceptable performance, sample analyses cannot continue until a new ICAL is established and verified with an ICV. However, sample data associated with an unacceptable CCV may be reported as qualified data under the following special conditions:

13.2.1.2.1 When the acceptance criteria for CCV are exceeded high, i.e., high bias, and there are associated samples that are non-detects, then those non-detects may be reported. Otherwise the samples affected by the unacceptable calibration verification must be reanalyzed after a new ICAL has been established, evaluated and accepted.

13.2.1.2.2 When the acceptance criteria for the CCV are exceeded low, i.e., low bias, those sample results may be reported if they exceed a maximum regulatory limit/decision level. Otherwise the samples affected by the unacceptable verification must be reanalyzed after a new ICAL is established and verified with an ICV.

13.2.1.2.3 When the acceptance criteria for the CCV are exceeded and it is not possible to reanalyze the sample due to limited sample quantity AND the laboratory cannot obtain a new sample, the data may be reported with the appropriate data qualifiers if the client has been contacted and agrees, in writing, to accept the qualified data.

13.3 Records:

Initial and Continuing Calibration Records will contain, at a minimum, the following:

1) Calibration date.
2) Test method.
3) Instrument.
4) Analysis date.
5) Each analyte name.
6) Analyst's initials or signature.
7) Standard Concentration (appropriate units) and number of standards.
8) Response (appropriate units).
9) Calibration curve or response factor.
10) Evaluation of and Statistics for ICAL curve fit in order to judge calibration curve acceptance.
11) Evaluation of and Acceptance Limits for ICV analysis in order to judge calibration curve acceptance.
12) Evaluation of and Acceptance Limits for CCV analysis in order to judge continuing calibration acceptance.

13.4 Thermometers

The thermometers in the sample refrigerators and the standards freezer must be checked daily. They must meet performance criteria.

14.0 PROCEDURE

14.1 Sample Preparation

14.1.1 Water, soil, sediment and waste samples must be prepared by SOP 3500 Extractions of Samples for Organic Analyses (EPA Methods 3510C, 3520C, 3550B, 3580A, 8151A) prior to HPLC analysis.

14.1.2 Direct Injection: In very limited applications direct injection of the sample into the HPLC system with a 10 µL syringe may be appropriate (see SOP 3500 for preparation). The reporting limit is very high (approximately 100 to 1000 mg/L); therefore, it is only applicable where concentrations in excess of 100 mg/L are expected.

14.1.3 Extract Preparation: Sample extracts should be at ambient temperature prior to use.

14.2 HPLC Analysis

14.2.1 Instrument Conditions: The recommended HPLC with Variable Wavelength Detector operating conditions:

Detector Wavelength:	225 nm
Sample volume:	10 µL
Column:	Ultra Aqueous C18, 150 x 4.0mm, 5 µm (Restek Catalog #
Guard Column:	Pelliguard LC-18 (Supelco Catalog # 59654)
Column Flow:	1.0 ml/minute
Column Temperature:	40 °C
Stop Time:	26.0 minutes

Solvents:

Solvent A:	Water
Solvent B:	Acetonitrile
Solvent C:	0.05% Phosphoric Acid
Solvent D:	Isopropanol

Gradient Program:

Time	% B (Acetonitrile)	% C (0.05% Phosphoric)
0	20	80
15	80	20
20	80	20
21	20	80

14.2.2 Access the computer and create a batch sequence file. Refer to section 14.3 for instructions.

14.2.3 Inject 10 µL of the Continuing Calibration Verification Standards (CCV) and evaluate using CCV acceptance criteria. See Section 13.2.

14.2.4 If all criteria are met, continue with sample analysis, injecting 10 µL of each extract, as outlined below.

DILUTION PROCEDURE

1. Clean a 1ml syringe equipped with a luer lock needle with rinse and clean solvent. (Acetonitrile) Fill syringe with clean solvent such that there is sufficient volume remaining for the dilution volume (see Table 4) and remove the needle. Place the needle on the counter top such that the tip of the syringe is elevated.

2. Clean an appropriate syringe (see Table 4) with rinse and clean solvent. Expel excess solvent by pumping plunger several times. Puncture the sample vial with the syringe needle and withdraw the sample into the syringe.

3. Remove the syringe from the sample vial and insert the needle into the barrel of the 1ml syringe. Inject the sample into the clean solvent. Hold the 1-ml syringe so that the tip is up and gently push up on the plunger to remove excess air from the barrel.

4. Replace the needle on the 1-ml syringe and add sufficient clean solvent to a final volume of 1 ml. Transfer the entire contents of the syringe into a labeled sample vial. Cap vial.

Table 4 STANDARD DILUTIONS

Dilution	Sample Volume mL	Total Volume µL
1:5	200	1000
1:10	100	1000
1:20	50	1000
1:50	20	1000
1:100	10	1000

14.2.5 Perform all qualitative and quantitative measurements as described in Sections 14.4 and 14.5. After analysis, store the extracts in the dark at 0.1- 6°C.

14.3 Analytical Sequence

START CHEMSTATION SOFTWARE:
From NT Desktop: Start/Programs/MSD ChemStation/Instrument #1/Instrument #1

The software will locate the instrument and all peripheral equipment. Once the software is fully loaded there will be one window visible. All instrument and sequence controls are accessed through this one window.

Check the solvent bottles on top of the instrument to ensure that there is sufficient solvent to last for the entire sequence. If necessary, fill bottles with appropriate solvent and adjust the bottle level in the software. In the Method and Run Control panel select Instrument/More Pump/Bottle Filling... and adjust the fill levels to the appropriate amount.

From Method and Run Control panel select Instrument/System On to start the pump and the detectors.

SEQUENCE SETUP

From menu: Sequence/Sequence Parameters

1. Set current date in Prefix and Subdirectory space (i.e., 060704)
2. OK (to save changes)

From menu: Sequence/Sequence Table

1. Set up sequence order using the following format: (**NOTE:** CCVs must always run first)

LOCATION	SAMPLE NAME	METHOD NAME	Inj./ Location	SAMPLE TYPE
Vial 1	BLANK ACN	HERB0330	1	SAMPLE
Vial 2	CCV HERB-A-1.0	HERB0330	1	SAMPLE
Vial 3	CCV HERB-B-1.0	HERB0330	1	SAMPLE
Vial 4	MB-9513-HERB	HERB0330	1	SAMPLE

Vial 5	LCS-9513-HERB	HERB0330	1	SAMPLE
Vial 6	0405123-001A	HERB0330	1	SAMPLE
...	...	...	...	...
Vial 18	0405123-012A	HERB0330	1	SAMPLE
Vial 1	BLANK ACN	HERB0330	1	SAMPLE
Vial 2	CCV HERB-A-1.0	HERB0330	1	SAMPLE
Vial 3	CCV HERB-B-1.0	HERB0330	1	SAMPLE

NOTE: The number of samples, including CCV's that can be analyzed within the 12-hour window varies with each analysis. Use this list as a guide but always check that the samples were analyzed within 12-hours of the first CCV injection.

2. OK (to save changes)
3. Save the sequence to the current subdirectory by selecting Sequence/Save Sequence As.../ and renaming the sequence to match the current subdirectory name (i.e., 060704.s).
4. Save the method to the current subdirectory by selecting Sequence/Save Method As.../ and saving the method to the current subdirectory.

TO START SEQUENCE:
From Method and Run Control panel click on the "START →" button.

Start of the 12 hour sequence (as documented as the date/time stamp on the data file for the CCV Standard):

The analytical sequence for Initial Calibration is:

Blank (Solvent Blank)
Calibration standard-A (S1)
Calibration standard-A (S2)
Calibration standard-A (S3)
Calibration standard-A (S4)
Calibration standard-A (S5)
Calibration standard-A (S6) optional
Calibration standard-A (S7) optional
Calibration standard-B (S1)
Calibration standard-B (S2)
Calibration standard-B (S3)
Calibration standard-B (S4)
Calibration standard-B (S5)
Calibration standard-B (S6) optional
Calibration standard-B (S7) optional
Initial Calibration Verification Standard (ICV)

The analytical sequence for Sample Analysis is:

Blank (Solvent Blank)
Continuing Calibration Verification Standard-A (CCV-A)
Continuing Calibration Verification Standard-B (CCV-B)
Method Blank (MB)
LCS
LCS Duplicate (if applicable)
Sample #1
Sample #1 Matrix Spike (MS)
Sample #1 Matrix Spike Duplicate (MSD)
Sample #1 Laboratory Duplicate (if applicable)
Samples #2, #3, etc. until the end of 12-hour period
Blank (Solvent Blank)
Continuing Calibration Verification Standard-A (CCV-A)
Continuing Calibration Verification Standard-B (CCV-B)
Samples up to #20
Method Blank (MB) #2
LCS #2
LCSD #2 (if applicable)
Sample #21
Sample #21 Matrix Spike (MS)
Sample #21 Matrix Spike Duplicate (MSD)
Sample #21 Laboratory Duplicate (if applicable)
Samples #22, #23, etc. until the end of 12-hour period

14.4 Interpretation - Qualitative Analysis

14.4.1 An analyte is identified based upon the Retention Time (RT) of a standard of the suspected compound.

14.4.2 The RT of the sample component is within ± 0.06 RT units of the RT of the standard component.

14.4.3 Identification is hampered when sample components are not resolved chromatographically or coelute. When chromatographic peaks obviously represent more than one sample component (i.e., a broadened peak with shoulder(s) or a valley between two or more maxima), use SOP 1255 Manual Integration for guidance in the integration of these two peaks. Use SOP 1255 Manual Integration for other situations that may require analyst efforts to correct computer generated integrations that are not technically sound.

14.4.4 Several sets of compounds coelute on this analytical column. The following pairs of compounds coelute:

Bentazon and 2,4-Dichlorophenylacetic acid (surrogate)
2,4-D and MCPA
Dichlorprop and MCPP

Perform the following steps to help identify the correct peak during analysis:

14.4.4.1 The surrogate is present in every sample analyzed. The peak is assumed to be 2,4-Dichlorophenylacetic acid unless there is an enhanced response as in the case of the analysis of an LCS/LCSD or MS/MSD when Bentazon has been spiked in the sample.

14.4.4.1 If there is a peak for 2,4-D and MCPA assume that the peak is 2,4-D and not MCPA. In an LCS/LCSD and an MS/MSD both peaks are present.

14.4.4.1 If there is a peak for Dichloroprop and MCPP the analyst will use best judgement to determine the identification of the peak. Confer with the Project Manager to determine which compounds are suspected. In an LCS/LCSD and an MS/MSD both peaks are present.

14.5 Data Interpretation - Quantitative Analysis

14.5.1 Once a compound has been identified, the quantitation of that compound must be based on the integrated abundance.

14.5.2 If the RSD of a compound's response factor is 20% or less, then the concentration in the extract is determined using the average calibration factor (CF) from initial calibration data (13.2). See Method 8000, Sec. 7.0, for the equations describing internal standard calibration and either linear or non-linear calibrations. If the RSD is greater than 20%, refer to section 15.1.2.

14.6 Logbook Records

Record the following information in the appropriate logbook or data file. Include any deviations from this procedure. Analyst initials, date of analysis, sample number or ID, initial sample volume or weight processed, final extract volume, calibration standard sample or solution identifier, QC sample or solution identifier, surrogate solution identifier, any dilution information, readings from support equipment, data file name, instrument method name, visual observations, and any other information as deemed necessary.

14.7 Troubleshooting

The experience of the analyst performing HPLC analyses is invaluable to the success of the methods. Each day that the analysis is performed, the daily calibration standards (CCV-A and CCV-B) must be evaluated to determine if the chromatographic system is operating properly. Questions that must be asked: Do the peaks look normal? Is the response obtained comparable to the response from previous calibrations? Careful examination of the standard chromatogram can indicate whether the column is still good, if there is a leak, the inline filter needs replacing, etc. If any major changes are made to the system (e.g. column changed or detector cleaned), recalibration of the system must take place.

14.8 Routine Maintenance - Record all maintenance

14.8.1 Daily, or as needed according to sample throughput, change the inline filters and/or rinse the column. Alternatively, the use of a guard column helps to protect the analytical column from residue buildup. Replacing the guard column may be done to improve column performance.

14.8.2 Clean the detector windows on an as needed basis (loss of sensitivity).

14.8.3 Inspect the autosampler syringe for wear; replace as necessary.

14.8.4 Check the solvent supply; replace as necessary.

15.0 DATA REDUCTIONS, CALCULATIONS, AND LOADING

15.1 The data system performs the calculations.

15.1.1 If the %RSD of a compound's relative response factor is 15% or less, then the concentration in the extract may be determined using the average response factor (RF) from the initial calibration data (13.2) and the following equation:

$$C_{ex}(mg/L) = \frac{A_x \times C_{is}}{A_{is} \times CF}$$

where C_{ex} is the concentration of the compound in the extract, and the other terms are defined in Sec. 13.2.

15.1.2 Alternatively, linear regression (Sec. 13.2) may be used for determination of the extract concentration.

15.2 Compute the concentration of the analyte in the sample using the equations in Secs. 15.2.1 and 15.2.2.

15.2.1 The concentration of the analyte in the liquid samples is calculated using the concentration of the analyte in the extract and the volume of liquid extracted, as follows:

$$\text{Concentration in liquid (mg/L)} = \frac{C_{ex} * V_f}{V_i}$$

or

$$\text{Concentration in liquid (µg/L)} = \frac{C_{ex} * V_f * 1000}{V_i}$$

where:
V_f = final extract volume in mL (includes any dilution volumes)
V_i = initial volume of liquid extracted, in mL.

15.2.2 The concentration of the analyte in the solid sample is calculated using the concentration of the analyte in the extract and the weight of the solid extracted, as follows:

$$\text{Concentration in solid (mg/Kg)} = \frac{C_{ex} * V_f}{W_i}$$

or

$$\text{Concentration in solid (µg/Kg)} = \frac{C_{ex} * V_f * 1000}{W_i}$$

where:
V_f = final extract volume in mL (includes any dilution volumes)
W_i = initial sample weight, in g.

For soil samples reported on dry weight basis, divide the Concentration by the decimal equivalent of the Percent Solids. For example: a sample contains 90% solids, thus

$$\text{Concentration in solid (mg/Kg) dry weight} = \frac{C_{ex} * V_f}{W_i * 0.90}$$

15.3 See Section 14.10 of STAT SOP 1040 General Laboratory Practices for calculations.

16.0 METHOD PERFORMANCE

Demonstration of Capability (DOC)
All parameters of interest must meet the method acceptance criteria before actual sample analysis begins. See SOP 1230 Training for the procedure to perform and document the DOC. The DOCs for the analysts performing this method are located in the analysts' training form folders located in the QA office files.

A quality control (QC) reference concentrate is required containing each analyte at a concentration of 1 µg/mL in acetone. The QC reference sample used is the Herbicides ICV (refer to Section 10.9 for composition). The QC reference sample is made using stock standards prepared independently from those used for calibration.

For each analyte calculate the mean recovery (x) and standard deviation (s) and the average % Recovery (%R). Compare X and s and %R with the corresponding acceptance criteria for accuracy and precision, respectively. Note: x must be within 0.5 and 1.5 µg/mL and s must be less than 0.25 µg/L and %R must be within 50 to 150%. If x and s and %R for all analytes meet the acceptance criteria, the system performance is acceptable and analysis of actual samples can begin. If any individual x or %R falls outside the range for accuracy or any individual s exceeds the precision limit, then the system performance is unacceptable for that analyte and corrective action must be taken.

Locate and correct the source of the problem and repeat the test only for those analytes that failed to meet criteria. Repeated failure, however, will confirm a general problem with the measurement system. If this occurs, locate and correct the source of the problem and repeat the test for all compounds of interest.

Comparison to Reference Method Data
EPA Method 8000B provides guidance for the establishment of control limits for the LCS and MS QC samples. Recovery limits of 70% to 130% are provided as initial benchmarks for performance (8000B Section 8.5.4). These limits are designed for a wide variety of organic test methods. Individual analyte performance may vary.

In-House Control Limits
Method performance data is on file in the laboratory QC department. Comparison of method performance data for the laboratory to the reference method criteria occurs when laboratory in-house acceptance limits are generated. In-house generated data is compared to the specifications of the reference method. If the in-house limits are within the specifications of the reference method, the control limits are updated in LIMS. If the in-house limits are not within specifications, an investigation is performed to determine the cause(s) of the problem and a corrective action is completed. The analysis may continue until enough data points are collected to regenerate new control limits. Any QC data generated outside of reference method limits during that time frame is flagged.

The laboratory maintains performance records to document the quality of data that is generated. Method accuracy for samples is assessed and records maintained. After the analysis of 20 laboratory control samples and surrogates, calculate the average percent recovery (R) and the standard deviation of the percent recovery (S).

Control limits for the method parameters are generated by the QC staff and distributed to the analysts via updates to the LIMS control charts. The control limits are calculated based on in-house performance data. At a minimum, these limits are reviewed annually.

17.0 POLLUTION PREVENTION

The preparation of excessive volumes of laboratory reagents and standards shall be avoided so that waste and potential for pollution are minimized. Samples, reagents and standards shall be disposed in compliance with the lab waste disposal program, SOP 1130 Waste Disposal. With the consent of the client, the samples may be returned to their origin for treatment.

Uncontaminated paper waste, glass and cans should be separated for recycling. Laboratory staff are required to protect the laboratory's and our clients' business information when disposing recycled paper or waste from the facility.

18.0 DATA ASSESSMENT AND CRITERIA FOR QUALITY CONTROL MEASURES

Data assessment includes review of: proper sample condition, preservation, and storage; analysis within holding time limitations; deviations from the SOP, evaluation of performance based or in-house control limits, reference method limits or project specific limits.

The laboratory must maintain records to document the quality of data that is generated. Ongoing data quality checks are compared with established performance criteria to determine if the results of analyses meet the performance characteristics of the method. When results of sample spikes indicate atypical method performance, a calibration verification standard is used to confirm the measurements were performed in an in-control mode of operation. The data review is conducted according to SOP 1250 Data Review.

18.1 Blanks

If the blank exceeds the RL (usually the lowest calibration standard or specifically defined in this test method SOP), the source of contamination must be investigated and corrective actions taken. The compound concentrations in the method blank of an extraction batch must be less than the RL's listed in Attachment 1. If this criteria is exceeded, re-analyze the method blank. If after re-analysis, the blank criteria is still exceeded, then the entire extraction batch must be re-extracted. Always refer to a client specific QAPP for additional guidance.

If the surrogate recovery is outside the QA limits as defined in this test method the source of the nonconformance must be investigated and corrective actions taken. If this criteria is exceeded, re-analyze the method blank. If after re-analysis, the blank criteria is still exceeded, then the entire extraction batch must be re-extracted. Always refer to a client specific QAPP for additional guidance.

Affected samples must be reprocessed and reanalyzed **or** Data must be appropriately qualified if:

1) The concentration of a targeted analyte in the blank is at or above the reporting limit as established by the SOP or by regulation, AND is greater than 1/10 of the amount measured in any sample.

2) The blank contamination otherwise affects the sample results as per the test method requirements or the individual project data quality objectives.

18.2 Laboratory Control Samples (LCS)

The results of the individual batch LCS are calculated in percent recovery (%R) and compared to established acceptance criteria from in house analyses. If the LCS is outside the acceptance criteria, see Table 5 for current acceptance criteria, the analytical system is "out-of-control." Any affected samples associated with an out-of-control LCS must be reprocessed and reanalyzed or the results reported with appropriate data qualifiers. If after re-analysis the control criteria has not been met, the entire extraction batch must be re-extracted. Always refer to a client specific QAPP for additional guidance.

Table 5 LCS

Compound	Soil Recovery %	Water Recovery %
2,4-D	50-150	50-150
2,4-DB acid	50-150	50-150
Dalapon	50-150	50-150
Dicamba	50-150	50-150
Dichlorprop	50-150	50-150
Dinoseb	50-150	50-150
MCPA	50-150	50-150
MCPP	50-150	50-150
Pentachlorophenol	50-150	50-150
Picloram	50-150	50-150
2,4,5-T	50-150	50-150
2,4,5-TP (Silvex)	50-150	50-150
Acifluorfen	50-150	50-150
Bentazon	50-150	50-150
Chloramben	50-150	50-150
3,5-Dichlorobenzoic Acid	50-150	50-150
4-Nitrophenol	50-150	50-150

18.3 Surrogates

18.3.1 The results of the individual Surrogate compounds are calculated in percent recovery (%R). Surrogates outside the acceptance criteria, see Table 6 for current acceptance criteria, must be evaluated for the effect indicated for the individual sample results.

Table 6 Surrogate

Surrogate Compound	Soil % Recovery	Water % Recovery
2,4-Dichlorophenylacetic acid	50-150	50-150

If surrogate recoveries are not within the established acceptance criteria, proceed as follows (SW-846 8000B):

1) Check to be sure that there are no errors in the calculations, surrogate solutions or internal standards. If errors are found, recalculate the data accordingly. Examine chromatograms for interfering peaks and integrated peak areas.

2) Check instrument performance. If an instrument performance problem is identified, correct the problem and re-analyze the extract (or re-analyze the sample for volatiles).

3) Some samples may require dilution in order to bring one or more target analytes within the calibration range or to overcome significant interferences with some analytes. This may result in the dilution of the surrogate responses to the point that the recoveries cannot be measured. If the surrogate recoveries are available from a less diluted or undiluted aliquot of the sample or sample extract, those recoveries may be used to demonstrate that the surrogates were within the QC limits, and no further action is required. However, the results of both the diluted and undiluted (or less-diluted) analyses should be provided to the data user.

4) If no instrument problem is found and if sufficient sample is available, the sample should be re-extracted and re-analyzed.

18.3.2 If, upon re-analysis (in either 2 or 4 above), the recovery is again not within limits, report the data as an "estimated concentration." If the recovery is within the limits in the re-analysis, provide the re-analysis data to the data user. If the holding time for the method has expired prior to the re-analysis, provide both the original and reanalysis results to the data user, and note the holding time problem.

18.4 Duplicates

The results from laboratory duplicates are designed to assess the precision of analytical results in a given matrix and are expressed as relative percent difference (RPD). See the STAT Quality Assurance Manual, Section 5.4 for the calculation for RPD. Results are compared to established acceptance criteria as listed in the MS/MSD Tables 7. For duplicates results outside established criteria, corrective action must be documented or the data reported with appropriate data qualifying codes.

For this test method, the analysis of the MS/MSD pair is used for determination of method precision. For cases where the sample cannot be divided (e.g., wipes, air samples, not enough sample provided by customer) and thus a MS/MSD pair cannot be prepared in the preparation batch, an LCS/LCSD pair is prepared and analyzed to measure precision. Precision data from Tables 7 will be used for RPD acceptance criteria for LCS/LCSD.

18.5 Matrix Spikes

18.5.1 The results from MS/MSD are primarily designed to assess the precision and accuracy of analytical results in a given matrix and are expressed as percent recovery (%R) and relative

percent difference (RPD). See the STAT Quality Assurance Manual, Section 5.4 for the calculation for RPD.

18.5.2 Tables 7 show the compounds spiked, the levels and the current QC criteria for soils and water samples.

Table 7 Matrix Spike – Soil and Aqueous

Compound	Amount added µg/Kg	Amount added µg/L	RPD Limit	% Recovery
2,4-D	33.3	1.0	25	50-150
2,4-DB acid	33.3	1.0	25	50-150
Dalapon	33.3	1.0	25	50-150
Dicamba	33.3	1.0	25	50-150
Dichlorprop	33.3	1.0	25	50-150
Dinoseb	33.3	1.0	25	50-150
MCPA	33.3	1.0	25	50-150
MCPP	33.3	1.0	25	50-150
Pentachlorophenol	33.3	1.0	25	50-150
Picloram	33.3	1.0	25	50-150
2,4,5-T	33.3	1.0	25	50-150
2,4,5-TP (Silvex)	33.3	1.0	25	50-150
Acifluorfen	33.3	1.0	25	50-150
Bentazon	33.3	1.0	25	50-150
Chloramben	33.3	1.0	25	50-150
3,5-Dichlorobenzoic Acid	33.3	1.0	25	50-150
4-Nitrophenol	33.3	1.0	25	50-150

18.6 Other

The laboratory will analyze standard reference materials and participate in relevant performance evaluation studies quarterly.

19.0 CORRECTIVE ACTIONS FOR OUT-OF-CONTROL DATA

The process for handling unacceptable and out-of-control data is found in SOP 230 Corrective Action.

If the CCV, MB, LCS/LCSD, MS/MSD, lab duplicate, surrogate, or recovery of any parameter falls outside the designated acceptance range, the laboratory performance for that parameter is judged to be out-of-control, and the problem must be immediately identified and corrected. The analytical result for that parameter in the samples is suspect and is only reported for regulatory compliance purposes with the appropriate corrective action form. Immediate corrective action includes reanalyzing all affected samples by using any retained sample before the expiration of the holding time. Final data results must be qualified in the client report for reported results not meeting the laboratory-defined criteria.

1) Review standards preparation logbooks. Check all calculations and ensure dilution factors are properly recorded.
2) Re-prepare the suspected standard or QC sample to identify possible preparation errors of the standard or QC sample.
3) Re-Analyze the samples when the CCV or LCS is not within acceptable limits.
4) Perform routine preventative maintenance following manufacturer's specification. Record all maintenance in the instrument logbook.

20.0 CONTINGENCIES FOR HANDLING OUT-OF-CONTROL OR UNACCEPTABLE DATA

Every effort is made to prevent problems from occurring. When out-of-control or unacceptable data occurs the first option is to identify the problem and reanalyze the samples within the holding times. When this is not possible, the QA Manager and/or the Laboratory Director reviews data and discusses options with the client. Reanalysis or reporting the data with qualification are alternatives. Out-of-control or unacceptable data reported to the client must include the data qualifier, flag and discussion on the rationale for reporting.

Holding time exceedence, improper preservation and improper sample condition or storage are noted on the corrective action form and included on the final report.

Review the CCV standard response, LCS result, the surrogate recovery, and internal standard recovery for acceptable performance for each batch of samples. Record any trends or unusual performance on a corrective action form. Final data results must be qualified in the client report for results not meeting the laboratory-defined criteria.

Manual integration must be minimized for standards, reagent blanks and surrogates. Routine manual integration of the same parameters indicates a system performance problem. Correct this problem or note in the instrument analysis logbook the suspected causes for routine manual integration. Sign and date all manually integrated chromatograms.

20.1 The process for handling unacceptable and out-of-control data is found in the Laboratory QAM Section 10. The reporting of data that is out-of-control must be approved and documented by Quality Assurance Manager and either the Technical Manager or the Laboratory Director.

20.2 Client Requested Modifications:

20.2.1 Clients must request modifications from the laboratory SOP in writing to the lab.

20.2.2 The lab director, technical manager and quality assurance manager will evaluate the requested client deviations, determine the feasibly of the deviation and the potential effects on the data.

20.2.3 If it is determined that the lab will perform the requested deviations, lab director, technical manager and quality assurance manager will decide if a method validation study is required.

20.2.4 The designated project manager will retain all documentation concerning the requested deviation, including all correspondence with the client, in the client folder.

20.2.5 The final analytical report must include the statement "*This report has analyses performed using client requested modifications* ".

21.0 WASTE MANAGEMENT

The STAT Analysis Corporation Waste Disposal SOP 1130 identifies proper waste management practices for the chemicals and biological materials used in this procedure. Samples are stored and discarded accordance with SOP 1130 Waste Disposal.

22.0 REFERENCES

22.1 Method 8321A, Revision 1, December 1996; U.S. EPA SW-846 "Test Methods for Evaluating Solid Waste, Physical/Chemical Methods" Update III, December 1996.
22.2 SW-846 8000B Determinative Chromatographic Separations
22.3 "USEPA Contract Laboratory Program Statement of Work for Organic Analysis" Revision OLM04.2 May 1999, U. S. Environmental Protection Agency. Office of Solid Waste, Washington DC 20460.
22.4 SOP for sample prep: 3500
22.5 SAP 003 Chemical Hygiene Plan
22.6 SOP 230 Corrective Actions
22.7 SOP 1010 Analytical Standards and Reagents Receipt and Preparation
22.8 SOP 1130 Waste Disposal
22.9 SOP 1210 Method Detection Limits
22.10 SOP 1230 Training
22.11 SOP 1250 Data Review
22.12 SOP 1255 Manual Integration
22.13 SOP 1400 LIMS
22.14 Manufacturers' Equipment Instruction Manuals

23.0 FORMS, FIGURES, TABLES, DIAGRAMS, FLOWCHARTS, ATTACHMENTS OR VALIDATION DATA

Attachment 1. MDL's And Reporting Limits for Herbicide Compounds

ATTACHMENT 1. MDL's and REPORTING LIMITS FOR HERBICIDE COMPOUNDS

CASN	Compounds	MDL (µg/L)	RL (µg/L)	RL (mg/L)	MDL (µg/Kg)	RL (µg/Kg)	RL (mg/Kg)
94-75-7	2,4-D	0.115	0.3	0.0003	2.86	8.6	0.0086
94-82-6	2,4-DB acid	0.077	0.2	0.0002	5.85	17.6	0.0176
75-99-0	Dalapon	8.120	24.4	0.0244	1.83	5.5	0.0055
1918-00-9	Dicamba	0.074	0.2	0.0002	51.14	153.4	0.1534
120-36-5	Dichlorprop	0.084	0.3	0.0003	4.93	14.8	0.0148
88-85-7	Dinoseb	0.204	0.6	0.0006	5.77	17.3	0.0173
94-74-6	MCPA	0.094	0.3	0.0003	2.17	6.5	0.0065
7085-19-0	MCPP	0.063	0.2	0.0002	4.97	14.9	0.0149
87-86-5	Pentachlorophenol	0.155	0.5	0.0005	8.32	25.0	0.0250
1918-02-1	Picloram	0.079	0.2	0.0002	4.32	13.0	0.0130
93-76-5	2,4,5-T	0.046	0.1	0.0001	1.05	3.2	0.0032
93-72-1	2,4,5-TP (Silvex)	0.063	0.2	0.0002	1.34	4.0	0.0040
133-90-4	Chloramben	0.141	0.4	0.0004	2.30	6.9	0.0069
51-36-5	3,5-Dichlorobenzoic Acid	0.125	0.4	0.0004	0.87	2.6	0.0026
100-02-7	4-Nitrophenol	0.043	0.4	0.0004	25.30	75.9	0.0759

STAT Analysis Corporation:

STANDARD OPERATING PROCEDURE 4090

TOTAL PETROLEUM HYDROCARBONS (TPH) BY GC-FID

(EPA Method 8015B)

Revision 00
Effective Date: October 20, 2004

Author: Jeremiah Favero

Printed Name	Signature/Date
Jeremiah Favero Organic Manager	_____
Laurie Fetterman QA Manager	_____
Dennis Jachim Technical Manager	_____
Thomas M. Bauer Laboratory Director	_____

This Standard Operating Procedure has been prepared for the sole use of STAT Analysis Corporation.

Copy Number: _____

The absence of a Copy Number indicates this is an uncontrolled copy of the document supplied for information only.

Table of Contents

Title Page 1
Table of Contents 2
1. Identification of Test Method 3
2. Applicable Matrix or Matrices 3
3. Detection Limits 3
4. Scope and Application 3
5. Summary of Test Method 4
6. Definitions 4
7. Interferences 4
8. Safety 5
9. Equipment and Supplies 5
10. Reagents and Standards 5
11. Sample Collection, Preservation, Shipment and Storage 7
12. Quality Control 8
13. Calibration and Standardization 9
14. Procedure 12
15. Data Reduction, Calculations and Loading 17
16. Method Performance 18
17. Pollution Prevention 19
18. Data Assessment and Criteria For Quality Control Measures 19
19. Corrective Actions for Out-Of-Control Data 21
20. Contingencies for Handling Out-Of-Control Or Unacceptable Data 22
21. Waste Management 23
22. References 23
23. Forms, Figures, Tables, Diagrams, Flowcharts, Attachments or Validation Data 23
Attachment 1: MDL's and Reporting Limits For TPH Compound Ranges 24

1.0 IDENTIFICATION OF TEST METHOD

SOP Title: Total Petroleum Hydrocarbons (TPH) by GC-FID SW-846 8015B.

2.0 APPLICABLE MATRICES

Methylene chloride and organic solvent extracts from soil, sediment, ground and surface water, and mobility extracts are analyzed using this method.

3.0 DETECTION LIMITS

The lab follows the procedure found in 40CFR Part 136B to determine the MDL for each matrix type on an annual basis. See the STAT Analysis SOP 1210 for the MDL procedure, frequency and acceptance criteria. The MDL's measured by the lab and all supporting documentation are in the laboratory QA files for review.

The laboratory determined MDL must always be less than the reporting limit (RL), which is determined by the lowest calibration standard. The RLs will usually range from three to ten times the laboratory measured MDLs but this relationship may vary dependent on dilution of sample aliquots, matrix interferences, moisture adjustments (in solid samples), or method-specified requirements. Attachment 1 contains the current MDLs and reporting limits (RLs) for this SOP.

4.0 SCOPE AND APPLICATION

4.1 This standard operating procedure describes in detail the precise methods used at STAT Analysis Corporation for the analysis of environmental samples for Total Petroleum Hydrocarbons (TPH) by GC-FID. This SOP as written is to be applied when SW-846 Method 8015B is requested. This SOP is used to determine the concentration of TPH in extracts prepared from all types of solid waste matrices, soils, and ground water.

4.2 SOP 4090 can be used to quantitate petroleum hydrocarbons that are soluble in methylene chloride and other organic solvents and are capable of being eluted without derivatization as sharp peaks from a gas chromatographic column. See Attachment 1 for a list of ranges that have been evaluated on the specified GC-FID system.

Gasoline Range: $C_6 - C_{10}$ (boiling range 60 °C – 220 °C)
Diesel Range: $C_{10} - C_{18}$ (boiling range 170 °C – 430 °C)
Oil Range: $C_{18} - C_{28}$

4.3 The reporting limits (RLs) for this SOP are shown in Attachment 1 for soils and water. RLs will be proportionately higher for sample extracts and samples that require dilution or reduced sample size to avoid saturation of the detector.

4.4 This method is restricted to use by or under the supervision of analysts experienced in the use of a Gas Chromatograph (GC) and skilled in the interpretation of chromatograms. Each analyst must demonstrate the ability to generate acceptable results with this method.

5.0 SUMMARY OF TEST METHOD

5.1 Prior to using this method, the samples must be prepared for the GC using the appropriate sample preparation SOP (Section 14.1). Solid samples are extracted as received with methylene chloride. Aqueous samples are extracted as received with methylene chloride. This method describes chromatographic conditions that will allow for the separation of the compound ranges in the extract and for their qualitative and quantitative analysis by Gas Chromatography- Flame Ionization Detection. Identification of target analytes is accomplished by comparing component retention time ranges to those of authentic standards. Quantitation is accomplished by comparing the response of the peak area using a five-point calibration curve.

5.2 **Method Modifications from Reference**

5.2.1 This SOP is based on EPA SW-846 Method 8015B except that the TPH are reported as a range of compounds (i.e., gasoline range, diesel range and oil range) and not as individual peaks.

5.2.2 Samples are extracted for all ranges including GRO. Internal Blind samples have shown acceptable quality control using this technique.

5.2.3 No surrogate or internal standards are used in this method, because they would interfere with analyses of the ranges.

6.0 DEFINITIONS

The STAT Analysis Quality Manual Section 19.0 contains all the definitions of standard terms used in SOPs.

7.0 INTERFERENCES

7.1 Raw GC data from all blanks, samples, and spikes must be evaluated for interferences. Determine if the source of interference is in the preparation and/or cleanup of the samples and take corrective action to eliminate the problem.

7.2 Contamination by carryover can occur whenever high-concentration and low-concentration samples are sequentially analyzed. To reduce carryover, the sample syringe must be rinsed out between samples with solvent. Whenever an unusually concentrated sample is encountered, the sample after it should be reanalyzed to check for cross contamination.

8.0 SAFETY

Methylene chloride is a suspected carcinogen as are numerous compounds analyzed by this method. Proper personal protective equipment including safety glasses, nitrile gloves and a lab coat are required during different parts of this method. Other safety precautions must be conducted in accordance with the Chemical Hygiene Plan (STAT QA SAP 003). Other actions can also be applied if deemed necessary. A reference file of Material Safety Data Sheets (MSDS) is available to all personnel involved in this method.

9.0 EQUIPMENT AND SUPPLIES

The following apparatus is recommended for performing this procedure. Equivalent items can be used, if with their use, the analytical and QA/QC requirements in this SOP can be met. All catalog numbers in this SOP are current as of the effective date and thereafter subject to change.

9.1 Gas Chromatography System

9.1.1 Gas Chromatograph (GC) – Hewlett Packard 5890 Series II equipped with a Flame Ionization Detector (FID) and an Agilent Technologies 18593B autosampler.

9.1.2 Column – 30m x 0.250mm, 0.25 um film, (Agilent HP-5MS, Catalog # 19091S-433)

9.1.4 Data system – A Hewlett Packard Vectra VL computer system using EnviroQuant Chemstation G1701AA Version A.03.00 to collect and process the data is attached to the GC.

9.2 Micro syringes - 10 µL, 25 µL, 100 µL, 250 µL, 500 µL and 1,000 µL.

9.3 Volumetric flasks, Class A - 10 mL, 25 mL, 50 mL with ground glass stoppers.

9.4 Glass vials - 2-mL, for GC auto sampler with Teflon-lined screw caps or crimp tops.

9.5 Amber glass vials - 10 mL with Teflon-lined screw caps

10.0 REAGENTS AND STANDARDS

The following reagents and standards are required to perform this procedure. When instructions are given on how to prepare a specific volume of a reagent or standard, larger or smaller volumes can be prepared as needed so long as the final concentrations remain the same. Any other deviations from the reagents or standards listed in this SOP could be detrimental to the quality of the data produced. Such deviations would have to be approved and documented (see SOP QA 230 Corrective Action). Equivalent items can be used, if with their use, the analytical and QA/QC requirements in this SOP can be met.

Instructions for labeling and record keeping of reagents and standards are contained in SOP 1010 Analytical Standards and Reagents Receipt and Preparation.

10.1 Analytical reagent grade chemicals shall be used in all tests. Unless otherwise indicated, all reagents shall conform to the specifications of the Committee on Analytical Reagents of the American Chemical Society, where such specifications are available.

10.2 Organic-free reagent water - All references to water in this SOP refers to Type II reagent water (in-house system).

10.3 Stock Standard solutions - Standard solutions can be prepared from pure standard materials or purchased as certified solutions (e.g. SV standards). The routine laboratory practice is to purchase these standards from approved vendors. The standards used are: XHc Unleaded Gasoline Composite (Restek Catalog 30205), Diesel Fuel #2 Composite (Restek Catalog 31258) and Motor Oil Composite (Restek Catalog 31464). Stock standard solutions and QC solutions are stored at < -10°C and must be replaced after six months, or sooner if comparison with quality control check samples indicates a problem. Different storage conditions and expiration dates of other solutions are noted as warranted.

10.3.1 Secondary Stock Standard Solution – This solution is made using the individual Stock Standard solutions. Using microliter syringes, the following amounts of each Stock Standard solution is injected into three separate 10 mL volumetric flasks. The solution is brought to volume with methylene chloride. The final concentration of each component is listed in Table 1. Note: this Secondary Stock Standard solution is also used as the high-level calibration standard. It is also the source solution to prepare the calibration standards in Section 10.4. This standard is stored at < -10°C in a 10 mL amber screw cap vial equipped with a Teflon lined cap. It is freshly prepared every six months, or sooner if check standards indicate a problem.

Table 1 Secondary Stock Standard Solution

Stock Solution	Conc. Stock (µg/ml)	Vol. Stock (µL)	Final Conc. (µg/ml)
Gasoline Composite	50000	1000	5000
Diesel Fuel #2 Composite	50000	1000	5000
Motor Oil Composite	50000	1000	5000

10.4 Calibration standards - A minimum of five calibration standards are prepared. The low standard is the RL and above the MDL. The others define the working range of the GC system. Calibration standards in current use: 20, 100, 500, 1000, 2500 and 5000 µg/ml. (Table 2). Using microliter syringes, the following amount of the Secondary Stock solution is injected into a 1 ml syringe. The solution is brought to volume with methylene chloride. The final concentration of each component is listed in Table 2. Each solution is transferred to an autosampler vial. Storage is as indicated in 10.3. The continuing calibration verification standards (CCV) are prepared weekly and stored at 0.1-6 °C. Levels 3, 4 and 5 (500, 1000, 2500 µg/mL) are used for the CCVs.

Table 2 Calibration Standards

Level	Volume (µL) Secondary Stock	Volume (µL) Methylene Chloride	Final Concentration (µg/ml)

1	20 µL of 100 µg/ml	980	20
2	20	980	100
3	100	900	500
4	200	800	1000
5	500	500	2500
6	1000	----	5000

10.5 Laboratory Control Sample/Matrix Spike standards - The LCS/matrix spike compound range is composed of all these ranges. Samples will be spiked at 1000 ug/sample, 200 mg/Kg for soil and 1.0 mg/L for water (see SOP 3500 for LCS/Matrix Spike Solution preparation). This standard is stored at < -10°C in an amber glass vial with a Teflon lined screw cap.

10.6 Initial Calibration Verification Standard – A standard prepared from a different source at the midpoint of the calibration to verify the initial calibration. The solution is made using the following stock standards from AccuStandard. Gasoline-Regular Unleaded (Catalog GA-001-D-40X), #2 Diesel Fuel (Catalog FU-009-D-40X) and SAE 30W Motor Oil (Catalog FU-018-D-40X). Using microliter syringes, 500 µl of each Stock Standard solution is injected into a separate 10 mL volumetric flask. The solution is brought to volume with methylene chloride. The final concentration of each component is listed in Table 3 . This standard is stored at < -10°C.

Table 3 ICV Secondary Stock Standard Solutions

Compound Range	Conc. Stock (µg/ml)	Vol. Stock (µL)	Final Conc. (µg/ml)
Gasoline – Regular Unleaded	20000	500	1000
#2 Diesel Fuel	20000	500	1000
SAE 30W Motor Oil	20000	500	1000

10.7 Acetone, hexane, methanol, and other appropriate solvents, pesticide quality or equivalent.

11.0 SAMPLE COLLECTION, PRESERVATION, AND HANDLING

11.1 Containers used to collect samples for the determination of Total Petroleum Hydrocarbons are glass: 1 Liter bottles for water samples and various size jars for soil samples. They are equipped with screw caps with Teflon liners. Water samples containing residual chlorine should be field treated to remove the chlorine prior to collection. Plastic containers or lids may NOT be used for the storage of samples due to the possibility of sample contamination from the phthalate esters and other hydrocarbons within the plastic.

11.2 Samples must be stored under refrigeration at between 0.1 and 6.0°C. Extraction must be within 7 days from sampling date for water and 14 days for solids. Sample extracts are stored in the dark at between 0.1 and 6.0°C and must be analyzed within 40 days of extraction.

11.3 No chemical preservation is required for this method.

11.4 All samples are stored away from all standards, reagents, food, and other potentially contaminating sources in order to prevent cross contamination.

12.0 QUALITY CONTROL

The following details the QC requirements that apply to this analysis. Each Quality Control Indicator (QCI) provides information pertaining to either method or individual sample performance. Our goal is to produce defensible data of known and documented quality. The results of these Quality Control Indicator (QCI) samples are used to assess the acceptability of data.

12.1 Blanks

Method Blank analysis is performed to determine if any contamination is present in the analytical process and is used to evaluate acceptance of the batch of samples. A method blank shall be prepared once per preparation batch of 20 or less samples per matrix type. If more than 20 samples are prepared a second blank shall be prepared after the twentieth sample. The method blank shall be processed through all preparatory steps used for the samples, including cleanup procedures. The blank shall be analyzed using the same instrument and conditions as the samples.

The Solvent Blank, clean methylene chloride injected into the GC, is used to monitor the GC system for potential cross-contamination from one sample to another or for residual contamination in the system.

12.2 Calibration Verification

An Initial Calibration Verification (ICV) standard containing all of the target analytes reported in this method (refer to 10.6) shall be analyzed immediately after the completion of the initial calibration. The ICV shall be purchased from a second source to verify analyte concentrations.

12.3 Laboratory Control Sample (LCS)

The LCS is used to evaluate the performance of the total analytical system, including all preparation and analysis steps. The LCS shall be prepared once per preparation batch of 20 or less samples per matrix type. If more than 20 samples are prepared a second LCS shall be prepared after the twentieth sample. The LCS shall be processed through all preparatory steps used for the samples, including cleanup procedures. The LCS shall be analyzed using the same instrument and conditions as the samples. Refer to section 10.5 for LCS analytes and concentrations.

12.4 Duplicates

Duplicates of field samples or of the LCS must be prepared in compliance with the method requirements and client directives. Duplicate LCS's are prepared for sample wipes. It would be impractical to prepare a matrix spike and matrix spike duplicate. Reproducibility performance would be the same as for a matrix spike/matrix spike duplicate.

12.5 Matrix Spike and Matrix Spike Duplicate (MS/MSD)

MS/MSDs indicate the effect of the sample matrix on the precision and accuracy of the results generated using the selected method. This information does not determine the validity of the entire batch. MS/MSDs must be analyzed at a minimum of 1 per 20 samples per matrix per preparation procedure, or one per preparation batch, or as specified by the required test method. For cases where

the sample cannot be divided (e.g., wipes, air samples, not enough sample provided by customer) and thus a MS/MSD pair is cannot be prepared in the preparation batch, an LCS/LCSD pair is prepared and analyzed to measure precision. Samples chosen for matrix spiking are rotated among different clients and/or different client projects. This is accomplished through communication between the Department Manager and the analyst. In addition, designated samples, as indicated by client request or contract requirement, are matrix spiked. The MS/MSD pair shall be processed through all preparatory steps used for the samples. They shall be analyzed using the same instrument and conditions as the samples. Refer to section 10.5 for MS analytes and concentrations. Some clients may require different spiking levels and/or target analytes, these specific needs are documented on the request for analysis forms.

13.0 CALIBRATION AND STANDARDIZATION

13.1 Initial Calibration (ICAL)

13.1.1 Analyze 1 µL of each calibration standard and tabulate the area sum of the analyte against concentration for each compound range. All compounds are reported as boiling point ranges. All peak areas within defined retention times are summed and reported as one peak. Calculate calibration factors (CFs) for each range in each calibration standard as follows:

$$CF = \frac{A_x}{C_x}$$

where:

A_x = Area of the compound range being measured.

C_x = Concentration of the compound range being measured (ng/µL = µg/mL = mg/L).

13.1.2 Calculate the average calibration factor ($\overline{CF}$) for each compound range as follows:

$$\overline{CF} = (\Sigma\, CF_1 \text{ to } CF_n)/n$$

where: CF = CF for each of the calibration levels (i.e., 5)

n = Number of CF values (i.e., 5)

13.1.3 Calibration Check Compound Range (CCC) responses are monitored to check the integrity of the system.

Using the CFs from the initial calibration, calculate the percent relative standard deviation (%RSD) for the Calibration Check Compound Ranges (CCC).

To calculate %RSD: $\%RSD = 100\% \times SD/\overline{CF}$

where:

%RSD = % Relative Standard Deviation

$\overline{CF}$ = average of initial CFs for a compound range

SD = standard deviation (n-1) of average CFs for a compound range

To calculate Standard Deviation (n-1 degrees of freedom)

$$SD = \sum_{i=1}^{N} \sqrt{\frac{(CF_i - \overline{CF})^2}{n-1}}$$

where: CF_i =CF for each of the 5 calibration levels
n = Number of CF values (i.e., 5)

13.1.4 Linearity - If the %RSD of any range is 20% or less, then the relative calibration factor is assumed to be constant over the calibration range, and the average relative calibration factor is used for quantitation. If the %RSD is greater than 20%, first order linear regression is used. The calibration curve must meet the requirements for curve fitting listed in SW-846 8000B and the correlation coefficient is $\geq$0.99. The equation is not forced through the origin.

13.1.5 Before sample analysis can begin, a Initial Calibration Verification (ICV) (see Sec. 10.9) must be performed. The ICV results must be within the acceptance criteria as established for the CCV ranges (Section 13.2).

NOTES:

1. All calibration curves must have a unique identifier. It is recommended that the calibration date be incorporated into the identifier for easy reference.
2. Calibration must be completed (all standard levels analyzed) within 24 hours or the entire calibration sequence must be repeated.
3. All initial calibration standards must be analyzed as a group. No field sample analyses are allowed during the calibration sequence.
4. Do not add calibration standards and update the curve after the original calibration date.
5. Multiple analyses of the same calibration level are not allowed to be included in the calibration curve.
6. If more than five calibration levels are analyzed, it is permissible to either drop the low compound range concentration (poor response) or the high compound range concentration (detector saturation). It is not allowed to drop a point in the middle of the curve.
7. If more than five calibration levels are analyzed, it is permissible to drop an entire level if the analyst can document a specific reason or reasons why that level should be excluded. Mechanical failures, significant loss of all analyte responses possibly due to poor technique in standard preparation, or software malfunction during data acquisition (system did not acquire all compound range data) are plausible reasons. The reason must be justified and documented. The supervisor should review this situation and approve the analyst's decision.
8. The need to analyze more than two analyses of the same calibration level indicates a potential problem with the secondary stock solution. Prepare a fresh secondary stock solution and repeat all calibration levels. It is recommended that all calibration standard levels come from the same secondary stock solution.
9. Manual integration must only be used if the software fails to properly integrate the peak. If manual integration is used for a particular compound range, all levels of that compound range do not have to be manually integrated, but all levels must be integrated in a similar manner. Example: the computer generated integration of a compound range in the low level standard is not technically sound. A manual integration of the compound range is performed

(due to baseline noise, etc) in order to achieve a technically sound integration. The computer integrates other levels of the compound range correctly. The manual integration of the low level must match, as best as possible, the computer generated integrations for all other levels.

10. If any compound range in the mid-point level is manually integrated, the integration of this compound range must be reviewed for every continuing calibration standard and QC check solution (i.e. LCS, and Matrix Spike) to ensure that the integration is the same as the manual integration performed in the initial calibration (ICAL) mid-point. A consistent manner of integration must be achieved.
11. All manual integrations must be reviewed and approved at the supervisory level.

13.2 Continuing Calibration Verification (CCV)

13.2.1 All three continuing calibration verification (CCV) samples are analyzed every 20 samples during analysis of samples. Different standards are analyzed for the CCV such that a wider range of the calibration curve is verified. For example: on successive days analyze the 500 µg/mL, then the 1000 µg/mL and on the third day, the 2500 µg/mL standard solution. Compare the calibration factors of the CCC's from the CCV with the following criteria.

13.2.2 Control limits for the CCC ranges are ± 15% difference from the ICAL Calibration Factor (CF) if the average CF is used for quantitation, or ± 15% drift from the true concentration of the CCV range if linear regression is used.

13.2.3 If the CCV results obtained are outside the acceptance criteria, corrective actions must be performed. If routine corrective actions fail to produce an acceptable *second consecutive (immediate)* CCV, then either the lab has to demonstrate performance after corrective action with two consecutive successful CCVs, or a new ICAL must be performed. If the instrument has not demonstrated acceptable performance, sample analyses cannot continue until a new ICAL is established and verified with an ICV. However, sample data associated with an unacceptable CCV may be reported as qualified data under the following special conditions:

13.2.3.1 When the acceptance criteria for CCV are exceeded high, i.e., high bias, and there are associated samples that are non-detects, then those non-detects may be reported. Otherwise the samples affected by the unacceptable calibration verification must be reanalyzed after a new ICAL has been established, evaluated and accepted.

13.2.3.2 When the acceptance criteria for the CCV are exceeded low, i.e., low bias, those sample results may be reported if they exceed a maximum regulatory limit/decision level. Otherwise the samples affected by the unacceptable verification must be reanalyzed after a new ICAL is established and verified with an ICV.

13.2.3.3 When the acceptance criteria for the CCV are exceeded and it is not possible to reanalyze the sample due to limited sample quantity AND a new sample cannot be obtained by the laboratory, the data may be reported with the appropriate data qualifiers if the client has been contacted and agrees, in writing, to accept the qualified data.

13.3 Records: Initial and Continuing Calibration Records will contain, at a minimum, the following:

1) Calibration date
2) Test method
3) Instrument
4) Analysis date
5) Each analyte name

6) Analyst's initials or signature
7) Standard Concentration (appropriate units) and number of standards
8) Response (appropriate units)
9) Calibration curve or calibration factor
10) Evaluation of and Statistics for ICAL curve fit in order to judge calibration curve acceptance
11) Evaluation of and Acceptance Limits for ICV analysis in order to judge calibration curve acceptance
12) Evaluation of and Acceptance Limits for CCV analysis in order to judge continuing calibration acceptance

13.4 Thermometers - The thermometers in the sample refrigerators and the standards freezer must be checked daily. They must meet performance criteria.

14.0 PROCEDURE

14.1 Sample Preparation

14.1.1 Water, soil, sediment and waste samples must be prepared by SOP 3500 Extractions of Samples for Semi-Volatile Organic Analyses (EPA Methods 3510C, 3520C, 3550B, 3580A) prior to GC/FID analysis.

14.1.2 Extract Preparation: Sample extracts should be at ambient temperature prior to use.

14.2 GC Analysis

14.2.1 Instrument Conditions: The recommended GC with Flame Ionization Detector (FID) operating conditions:

Sample volume:	1 µL
Column Head Pressure:	10 psig Helium
Oven Temperature Program:	
Initial Temperature	40 °C
Initial Time	4 minutes
Temperature Ramp	20 °C/minute
Final Temperature	300 °C
Final Time	13 minutes
Injection Port (B)	250 °C
Detector (B)	300 °C
Flame Ionization Detector Fuel Flowrates:	
Hydrogen	30 ml/minute
Zero Air	300 ml/minute
Makeup (Helium)	30 ml/minute

14.2.2 Access the computer and create a batch sequence file. Refer to section 14.3 for instructions.

14.2.3 Inject 1 µL of the Continuing Calibration Verification Standards (CCV) and evaluate using CCV acceptance criteria. See Section 13.2.

14.2.4 If all criteria are met, continue with sample analysis, injecting 1 µL of each extract, as outlined below.

Dilution Procedure

1. Clean a 1ml syringe equipped with a luer lock needle with rinse and clean solvent (methylene chloride). Fill syringe with clean solvent such that there is sufficient volume remaining for the dilution volume (see Table 4) and remove the needle. Place the needle on the counter top such that the tip of the syringe is elevated.

2. Clean an appropriate syringe (see Table 4) with rinse and clean solvent. Expel excess solvent by pumping plunger several times. Puncture the sample vial with the syringe needle and withdraw the sample into the syringe.

3. Remove the syringe from the sample vial and insert the needle into the barrel of the 1ml syringe. Inject the sample into the clean solvent. Hold the 1ml syringe so that the tip is up and gently push up on the plunger to remove excess air from the barrel.

4. Replace the needle on the 1ml syringe and add sufficient clean solvent to a final volume of 1ml. Transfer the entire contents of the syringe into a labeled sample vial. Consult Table 4 for the appropriate volumes for standard dilutions. Cap vial.

Table 4 STANDARD DILUTIONS

Dilution	Sample Volume mL	Total Volume µL
1:5	200	1000
1:10	100	1000
1:20	50	1000
1:50	20	1000
1:100	10	1000

14.2.5 Perform all qualitative and quantitative measurements as described in Sections 14.4 and 14.5. After analysis, store the extracts in the dark at 0.1- 6°C.

14.3 **Analytical Sequence**

START CHEMSTATION SOFTWARE:

From Win95 Desktop: Start/Programs/GC_MS Instrument #1/GC_MS Instrument #1

The software will locate the instrument and all peripheral equipment. Once the software is fully loaded there will be two windows visible. Window one is the instrument control window. Instrument parameters are readily viewed from this window. The second window is the sequence control window. No instrument parameters are viewable from this window.

SEQUENCE SETUP

From menu: Sequence/Run

1. Set current date in Data File Directory space (i.e., C:\HPCHEM\1\DATA\060702\)
2. OK (to save changes)

From menu: Sequence/Edit Sample Log Table

1. Set data file name using current date using the following format MMDDYY## (e.g., 06070201)
2. Set up sequence order using the following format: (**NOTE:** CCV must always run first)

VIAL	METHOD	SAMPLE NAME
1	TPH_0219	BLANK
2	TPH_0219	CCV TPHDIESEL-500
3	TPH_0219	CCV TPHGAS-500
4	TPH_0219	CCV TPHOIL-500
5	TPH_0219	MBLK MB-1234-TPH
6	TPH_0219	LCS LCS-1234-TPH
7	TPH_0219	SAMP 0206001-001A
...	...	...
24	TPH_0219	SAMP 0206001-010A
1	TPH_0219	BLANK002
2	TPH_0219	CCV TPHDIESEL-500-2
3	TPH_0219	CCV TPHGAS-500
4	TPH_0219	CCV TPHOIL-500
25	TPH_0219	SAMP 0206001-011A

NOTE: The CCV must be run after every 20 samples.

3. OK (to save changes)

From menu: Method/Set New Default Paths

1. Update the method and data file paths using the current date (i.e., C:\MSDCHEM\1\DATA\060702\)
2. OK (to save changes)

Use Windows Explorer to copy all of the method files from the previous day's folder into the current day's folder.

TO START SEQUENCE:
From menu: Sequence/Run/Run Sequence

The analytical sequence for Initial Calibration is:

Solvent Blank
Calibration standard (S1) (Gasoline)
Calibration standard (S2) (Gasoline)
Calibration standard (S3) (Gasoline)
Calibration standard (S4) (Gasoline)
Calibration standard (S5) (Gasoline)

Calibration standard (S6) (Gasoline)
Calibration standard (S7) optional
Initial Calibration Verification Standard (ICV) (Gasoline)
Calibration standard (S1) (Diesel)
Calibration standard (S2) (Diesel)
Calibration standard (S3) (Diesel)
Calibration standard (S4) (Diesel)
Calibration standard (S5) (Diesel)
Calibration standard (S6) (Diesel)
Calibration standard (S7) optional
Initial Calibration Verification Standard (ICV) (Diesel)
Calibration standard (S1) (Motor Oil)
Calibration standard (S2) (Motor Oil)
Calibration standard (S3) (Motor Oil)
Calibration standard (S4) (Motor Oil)
Calibration standard (S5) (Motor Oil)
Calibration standard (S6) (Motor Oil)
Calibration standard (S7) optional
Initial Calibration Verification Standard (ICV) (Motor Oil)

The analytical sequence for Sample Analysis is:

Solvent Blank
Continuing Calibration Verification Standard (CCV (oil, gas, diesel))
Method Blank (MB)
LCS
LCS Duplicate (if applicable)
Sample #1
Sample #1 Matrix Spike (MS)
Sample #1 Matrix Spike Duplicate (MSD)
Sample #1 Laboratory Duplicate (if applicable)
Samples #2, #3, etc. until the 20th injection from the last CCV

Solvent Blank
CCV (oil, gas, diesel)
Samples #21
Method Blank (MB) #2
LCS #2
LCSD #2 (if applicable)
Sample #21
Sample #21 Matrix Spike (MS)
Sample #21 Matrix Spike Duplicate (MSD)
Sample #21 Laboratory Duplicate (if applicable)
Samples #22, #23, etc. until the 20th injection from the last CCV

14.4 Data Interpretation - Qualitative Analysis

14.4.1 An analyte is identified based upon the Retention Time (RT) range of a standard of the suspected compounds, unless requested otherwise by the client.

14.4.2 Identification is determined by retention time of the area summed peaks. Use SOP 1255 Manual Integration for other situations that may require analyst efforts to correct computer generated integrations that are not technically sound.

14.4.3 The following area sum start and stop times are to be used as a guide. Determine the appropriate stop and start times by overlaying the chromatograms of the three different standards at the 5000 ppm level.

Gasoline Range	3.6 – 10.0 minutes (gasoline start time – after $MeCl_2$ peak)
Diesel Range	10.0 – 16.5 minutes (gas/diesel stop/start – at lowest intersection)
Oil Range	16.5 – 30 minutes (diesel/oil) stop/start – at lowest intersection)

14.5 Data Interpretation - Quantitative Analysis

14.5.1 Once a compound range has been identified, the quantitation of that compound range must be based on the integrated abundance.

14.5.2 If the RSD of a range's response factor is 20 % or less, then the concentration in the extract is determined using the average calibration factor (CF) from initial calibration data (13.2). See Method 8000, Sec. 7.0, for the equations describing internal standard calibration and either linear or non-linear calibrations.

14.6 Records

Record the following information in the appropriate logbook or data file. Include any deviations from this procedure. Analyst initials, date of analysis, sample number or ID, initial sample volume or weight processed, final extract volume, calibration standard sample or solution identifier, QC sample or solution identifier, surrogate solution identifier, any dilution information, readings from support equipment, data file name, instrument method name, visual observations, and any other information as deemed necessary.

14.7 Troubleshooting

The experience of the analyst performing GC analyses is invaluable to the success of the methods. Each day that the analysis is performed, the daily calibration standards must be evaluated to determine if the chromatographic system is operating properly. Questions that must be asked: Do the peaks look normal? Is the response obtained comparable to the response from previous calibrations? Careful examination of the standard chromatogram can indicate whether the column is still good, if the injector is leaking, the injector septum needs replacing, etc. If any major changes are made to the system (e.g. column changed or detector cleaned), recalibration of the system must take place.

14.8 Routine Maintenance - Record all maintenance

14.8.1 Daily, or as needed according to sample throughput, change the septum and or the injection port liner. Trim a short section from the analytical column as necessary. Alternatively, the use of a guard column helps to protect the analytical column from residue buildup. A short section, 10 to 20 cm, of the guard column may be trimmed as to improve column performance. Replace the column on an as needed basis (loss of resolution).

14.8.2 Clean the detector on an as needed basis (loss of sensitivity).

14.8.3 Inspect the autosampler syringe for wear; replace as necessary.
14.8.4 Check the carrier gas supply; replace as necessary.

15.0 DATA REDUCTIONS, CALCULATIONS, AND LOADING

15.1 The data system performs the calculations.

15.1.1 If the %RSD of a range's relative calibration factor is 20% or less, then the concentration in the extract may be determined using the average calibration factor (CF) from the initial calibration data (13.2) and the following equation:

$$C_{ex}(mg/L) = \frac{A_x \times C_{is}}{A_{is} \times CF}$$

where C_{ex} is the concentration of the compound range in the extract, and the other terms are defined in Sec. 13.2.

15.1.2 Alternatively, linear regression (Sec. 13.2) may be used for determination of the extract concentration.

15.2 Compute the concentration of the analyte in the sample using the equations in Secs. 15.2.1 and 15.2.2.

15.2.1 The concentration of the analyte in the liquid samples is calculated using the concentration of the analyte in the extract and the volume of liquid extracted, as follows:

$$\text{Concentration in liquid (mg/L)} = \frac{C_{ex} * V_f}{V_i}$$

or

$$\text{Concentration in liquid (µg/L)} = \frac{C_{ex} * V_f * 1000}{V_i}$$

where:
V_f = final extract volume in mL (includes any dilution volumes)
V_i = initial volume of liquid extracted, in mL.

15.2.2 The concentration of the analyte in the solid sample is calculated using the concentration of the analyte in the extract and the weight of the solid extracted, as follows:

$$\text{Concentration in solid (mg/Kg)} = \frac{C_{ex} * V_f}{W_i}$$

or

$$\text{Concentration in solid (µg/Kg)} = \frac{C_{ex} * V_f * 1000}{W_i}$$

where:
V_f = final extract volume in mL (includes any dilution volumes)

W_i = initial sample weight, in g.

For soil samples reported on dry weight basis, divide the Concentration by the decimal equivalent of the Percent Solids. For example: a sample contains 90% solids, thus

$$\text{Concentration in solid (mg/Kg) dry weight} = \frac{C_{ex} * V_f}{W_i * 0.90}$$

15.3 See SOP 1040 General Laboratory Practices for additional calculations.

16.0 METHOD PERFORMANCE

Demonstration of Capability (DOC)

All parameters of interest must meet the method acceptance criteria before actual sample analysis begins. See SOP 1230 Training for the procedure to perform and document the DOC. The DOCs for the analysts performing this method are located in the analysts' training form folders located in the QA office files.

A quality control (QC) reference concentrate is required containing each analyte at a concentration of 1000 µg/mL in acetone. The QC reference sample used is the ICV Spike solutions (refer to Section 10.6 for composition). The QC reference sample is made using stock standards prepared independently from those used for calibration.

For each analyte calculate the mean recovery (x) and standard deviation (s) and the average % Recovery (%R). Compare X and s and %R with the corresponding acceptance criteria for accuracy and precision, respectively. Note: x must be within 25% (750 and 1250 µg/mL) and s must be less than 250 µg/L and %R must be within 50 to 150%. If x and s and %R for all analytes meet the acceptance criteria, the system performance is acceptable and analysis of actual samples can begin. If any individual x or %R falls outside the range for accuracy or any individual s exceeds the precision limit, then the system performance is unacceptable for that analyte and corrective action must be taken.

Locate and correct the source of the problem and repeat the test only for those analytes that failed to meet criteria. Repeated failure, however, will confirm a general problem with the measurement system. If this occurs, locate and correct the source of the problem and repeat the test for all compound ranges of interest.

Comparison to Reference Method Data

EPA Method 8000B provides guidance for the establishment of control limits for the LCS and MS QC samples. Recovery limits of 70% to 130% are provided as initial benchmarks for performance (8000B Section 8.5.4). These limits are designed for a wide variety of organic test methods. Individual analyte performance may vary.

In-House Control Limits

Method performance data is on file in the laboratory QC department. Comparison of method performance data for the laboratory to the reference method criteria occurs when laboratory in-house acceptance limits are generated. In-house generated data is compared to the specifications of the reference method. If the in-house limits are within the specifications of the reference method, the control limits are updated in

LIMS. If the in-house limits are not within specifications, an investigation is performed to determine the cause(s) of the problem and a corrective action is completed. The analysis may continue until enough data points are collected to regenerate new control limits. Any QC data generated outside of reference method limits during that time frame is flagged.

The laboratory maintains performance records to document the quality of data that is generated. Method accuracy for samples is assessed and records maintained. After the analysis of 20 laboratory control samples, calculate the average percent recovery (R) and the standard deviation of the percent recovery (S).

Control limits for the method parameters are generated by the QC staff and distributed to the analysts via updates to the LIMS control charts. The control limits are calculated based on in-house performance data. At a minimum, these limits are reviewed annually.

17.0 POLLUTION PREVENTION

The preparation of excessive volumes of laboratory reagents and standards shall be avoided so that waste and potential for pollution are minimized. Samples, reagents and standards shall be disposed in compliance with the lab waste disposal program, SOP 1130 Waste Disposal. With the consent of the client, the samples may be returned to their origin for treatment.

Uncontaminated paper waste, glass and cans should be separated for recycling. Laboratory staff are required to protect the laboratory's and our clients' business information when disposing recycled paper or waste from the facility.

18.0 DATA ASSESSMENT AND CRITERIA FOR QUALITY CONTROL MEASURES

Data assessment includes review of: proper sample condition, preservation, and storage; analysis within holding time limitations; deviations from the SOP, evaluation of performance based or in-house control limits, reference method limits or project specific limits.

The laboratory must maintain records to document the quality of data that is generated. Ongoing data quality checks are compared with established performance criteria to determine if the results of analyses meet the performance characteristics of the method. When results of sample spikes indicate atypical method performance, a calibration verification standard is used to confirm the measurements were performed in an in-control mode of operation. The data review is conducted according to SOP 1250 Data Review.

18.1 Blanks

If the blank exceeds the RL, the lowest calibration standard, the source of contamination must be investigated and corrective actions taken. The range concentrations in the method blank of an extraction batch must be less than the RL's listed in Attachment 1. If this criteria is exceeded, re-analyze the method blank. If after re-analysis, the blank criteria is still exceeded, then the entire extraction batch must be re-extracted. Always refer to a client specific QAPP for additional guidance.

Affected samples must be reprocessed and reanalyzed **or** Data must be appropriately qualified if:

1) The concentration of a targeted analyte in the blank is at or above the reporting limit as established by the SOP or by regulation, AND is greater than 1/10 of the amount measured in any sample.

2) The blank contamination otherwise affects the sample results as per the test method requirements or the individual project data quality objectives.

18.2 Laboratory Control Samples (LCS)

The results of the individual batch LCS are calculated in percent recovery (%R) and compared to established acceptance criteria from in house analyses. If the LCS is outside the acceptance criteria, see Table 5 for current acceptance criteria, the analytical system is "out of control." Any affected samples associated with an out of control LCS must be reprocessed and reanalyzed or the results reported with appropriate data qualifiers. If after re-analysis the control criteria has not been met, the entire extraction batch must be re-extracted. Always refer to a client specific QAPP for additional guidance.

Table 5 LCS

Compound range	Soil Recovery %	Water Recovery %
Gas Range	30-150	30-150
Diesel Range	30-150	30-150
Oil range	30-150	30-150

18.3 Duplicates

The results from laboratory duplicates are designed to assess the precision of analytical results in a given matrix and are expressed as relative percent difference (RPD). See the STAT Quality Assurance Manual, Section 5.4 for the calculation for RPD. Results are compared to established acceptance criteria as listed in the MS/MSD Tables 7 and 8. For duplicates results outside established criteria, corrective action must be documented or the data reported with appropriate data qualifying codes.

For this test method, the analysis of the MS/MSD pair is used for determination of method precision. For cases where the sample cannot be divided (e.g., wipes, air samples, not enough sample provided by customer) and thus a MS/MSD pair is cannot be prepared in the preparation batch, an LCS/LCSD pair is prepared and analyzed to measure precision. Precision data from Tables 7 and 8 will be used for RPD acceptance criteria for LCS/LCSD.

18.4 Matrix Spikes

18.4.1 The results from MS/MSD are primarily designed to assess the precision and accuracy of analytical results in a given matrix and are expressed as percent recovery (%R) and relative percent difference (RPD). See the STAT Quality Assurance Manual, Section 5.4 for the calculation for RPD. For matrix spike results outside established criteria corrective action must be documented or the data reported with appropriate data qualifying codes.

18.4.2 Table 7 shows the compound ranges spiked, the levels and the current QC criteria for soils and water samples.

Table 7 Matrix Spike – Soil and Aqueous

Compound range	Amount added µg/Kg	Amount added µg/L	RPD Limit	% Recovery
Gas Range	200	1000	25	30-150
Diesel Range	200	1000	25	30-150
Oil Range	200	1000	25	30-150

18.5 Other

The laboratory will analyze standard reference materials and participate in relevant Internal Blind QC studies semi-annually.

19.0 CORRECTIVE ACTIONS FOR OUT-OF-CONTROL DATA

The process for handling unacceptable and out of control data is found in SOP 230 Corrective Action.

If the CCV, MB, LCS/LCSD, MS/MSD, lab duplicate, or recovery of any parameter falls outside the designated acceptance range, the laboratory performance for that parameter is judged to be out of control, and the problem must be immediately identified and corrected. The analytical result for that parameter in the samples is suspect and is only reported for regulatory compliance purposes with the appropriate corrective action form. Immediate corrective action includes reanalyzing all affected samples by using any retained sample before the expiration of the holding time. Final data results must be qualified in the client report for reported results not meeting the laboratory-defined criteria.

1) Review standards preparation logbooks. Check all calculations and ensure dilution factors are properly recorded.
2) Re-prepare the suspected standard or QC sample to identify possible preparation errors of the standard or QC sample.
3) Re-Analyze the samples when the CCV or LCS is not within acceptable limits.
4) Perform routine preventative maintenance following manufacturer's specification. Record all maintenance in the instrument logbook.

20.0 CONTINGENCIES FOR HANDLING OUT-OF-CONTROL OR UNACCEPTABLE DATA

Every effort is made to prevent problems from occurring. When out of control or unacceptable data occurs the first option is to identify the problem and reanalyze the samples within the holding times. When this is not possible, the QA Manager and/or the Laboratory Director reviews data and discusses options with the client. Reanalysis or reporting the data with qualification are alternatives. Out of control or unacceptable data reported to the client must include the data qualifier, flag and discussion on the rationale for reporting.

Holding time exceedence, improper preservation and improper sample condition or storage are noted on the corrective action form and included on the final report.

Review the CCV standard response and LCS result for acceptable performance for each batch of samples. Record any trends or unusual performance on a corrective action form. Final data results must be qualified in the client report for results not meeting the laboratory-defined criteria.

Manual integration must be minimized for standards and reagent blanks. Routine manual integration of the same parameters indicates a system performance problem. Correct this problem or note in the instrument analysis logbook the suspected causes for routine manual integration. Sign and date all manually integrated chromatograms.

20.1 The process for handling unacceptable and out of control data is found in the Laboratory QAM Section 11. The reporting of data that is out of control must be approved and documented by Quality Assurance Manager and either the Technical Manager or the Laboratory Director.

20.2 Client Requested Modifications:

20.2.1 Clients must request modifications from the laboratory SOP in writing to the lab.

20.2.2 The lab director, technical manager and quality assurance manager will evaluate the requested client deviations, determine the feasibly of the deviation and the potential effects on the data.

20.2.3 If it is determined that the lab will perform the requested deviations, lab director, technical manager and quality assurance manager will decide if a method validation study is required.

20.2.4 The designated project manager will retain all documentation concerning the requested deviation, including all correspondence with the client, in the client folder.

20.2.5 The final analytical report must include the statement "*This report has analyses performed using client requested modifications*".

21.0 WASTE MANAGEMENT

The STAT Analysis Corporation Waste Disposal SOP 1130 identifies proper waste management practices for the chemicals and biological materials used in this procedure. Samples are stored and discarded accordance with SOP 1130 Waste Disposal.

22.0 REFERENCES

22.1 Method 8015B, Revision 1, December 1996; U.S. EPA SW-846 "Test Methods for Evaluating Solid Waste, Physical/Chemical Methods" Update III, December 1996.
22.2 SW-846 8000B Determinative Chromatographic Separations
22.3 "USEPA Contract Laboratory Program Statement of Work for Organic Analysis" Revision OLM04.2 May 1999, U. S. Environmental Protection Agency. Office of Solid Waste, Washington DC 20460.
22.4 SAP 003 Chemical Hygiene Plan
22.5 SOP QA 230 Corrective Actions
22.6 SOP 1000 Control and Use of Laboratory Notebooks
22.7 SOP 1010 Analytical Standards and Reagents Receipt and Preparation
22.8 SOP 1040 General Laboratory Practices
22.9 SOP 1130 Waste Disposal
22.10 SOP 1210 Method Detection Limit
22.11 SOP 1230 Training
22.12 SOP 1250 Data Review
22.13 SOP 1255 Manual Integration
22.14 SOP 1400 LIMS
22.15 SOP 3500 Extractions of Samples for Semi-Volatile Organic Analysis
22.16 Manufacturers' Equipment Instruction Manuals

23.0 FORMS, FIGURES, TABLES, DIAGRAMS, FLOWCHARTS, ATTACHMENTS OR VALIDATION DATA

Attachment 1: MDL's and REPORTING LIMITS FOR TPH COMPOUND RANGES

Attachment 1: MDL's and REPORTING LIMITS FOR TPH COMPOUND RANGES

Compound ranges	Water MDL (µg/L)	Water RL (mg/L)	Soil MDL (mg/Kg)	Soil RL (mg/Kg)
Gasoline Range	0.03	0.1	3.0	20
Diesel Range	0.05	0.1	0.9	20
Oil Range	0.01	0.1	1.1	20

STAT Analysis Corporation

STANDARD OPERATING PROCEDURE 4210

pH of Aqueous, Soil, and Waste Samples by EPA 9040B, 9045C, 150.1

Revision 01

Effective Date: 07/15/05

Author: Bruce Anderson and Ian Graske

Printed Name	Signature/Date
Bruce Anderson **Inorganic Manager**	7-14-05
Dennis Jachim **Technical Manager**	7/15/05
Laurie Fetterman **QA Manager**	7/14/05
Donald Cortes **Laboratory Director**	7/15/05

This Standard Operating Procedure has been prepared for the sole use of STAT Analysis Corporation.

Copy Number: _____

The absence of a Copy Number indicates this is an uncontrolled copy of the document supplied for information only.

Table of Contents

	Title Page	1
	Table of Contents	2
1.	Identification of Test Methods	3
2.	Applicable Matrix or Matrices	3
3.	Detection Limit	3
4.	Scope and Application	3
5.	Summary of Test Method	3
6.	Definitions	4
7.	Interferences	4
8.	Safety	4
9.	Equipment and Supplies	4
10.	Reagents and Standards	5
11.	Sample Collection, Preservation, Shipment and Storage	5
12.	Quality Control	6
13.	Calibration and Standardization	6
14.	Procedure	8
15.	Data Reduction, Calculations and Loading	11
16.	Method Performance	11
17.	Pollution Prevention	12
18.	Data Assessment and Criteria for Quality Control Measures	12
19.	Corrective Actions for Out-Of-Control Data	12
20.	Contingencies for Handling Out-Of-Control Or Unacceptable Data	13
21.	Waste Management	13
22.	References	13
23.	Forms, Figures, Tables, Diagrams, Flowcharts, Attachments or Validation Data	13

1.0 Identification of Test Method

SOP Title: pH of Aqueous, Soil, and Waste Samples by EPA 9040B, 9045C, 150.1 is also known as pH in the laboratory records.

2.0 Applicable Matrix or Matrices

The applicable matrices for this analysis are water, soils and non-aqueous wastes Multiphasic aqueous wastes must contain at least 20% aqueous content for this test to be effective. Soils and non-aqueous waste must contain less than 20% aqueous content for this test to be effective. The method is not applicable to organic liquids and concentrated acids and bases.

3.0 Detection Limits

There is no laboratory Reporting Limit (RL) for this method. This method measures a property of the tested sample and is based upon the instrument used to perform the analysis. The theoretical range for pH measurement is 0 to14 pH units. MDL is not applicable for this test. However, the laboratory uses a reporting range of 2 to 12.4 pH units.

4.0 Scope and Application

This method is used to measure the pH or hydrogen ion content of aqueous liquids and aqueous extracts of solid samples. pH is a measure of the acidic (increased hydrogen ion content), neutral, or basic (decreased hydrogen ion content) nature of the tested material. A reading of 7 indicates a neutral solution. pH readings less than 7 indicate an acidic nature. The lower the pH reading, the more acidic the solution. pH readings greater than 7 indicate a basic nature. The higher the pH reading, the more basic the solution.

Note: Each analyst/ work cell must demonstrate the ability to generate acceptable results with this method.

5.0 Summary of Method

5.1 The pH of the sample is determined electrometrically using either a glass electrode in combination with a reference potential or a combination electrode.

5.2 The pH of a sample is measured using a pH meter calibrated using a series of standard solutions of known pH.

5.3 Whenever possible, samples are analyzed @ 25°C. Unless a temperature correction routine is used by the instrument, samples of different temperatures must be equilibrated to and results reported @ 25°C.

5.4 The instrument used for this test has an automatic temperature compensation routine to correct pH readings at various temperatures. The reported result is stated as pH @ 25°C.

5.5 For solid samples and non-aqueous sludges, the sample is mixed with laboratory reagent water. The pH of the water extract is then measured.

Method Modifications from Reference

a) The method recommends that the sample pH measurement be determined as soon as possible. The laboratory endeavors to perform this test as soon as is reasonably possible after sample receipt.
b) The laboratory measures reagent water used in 9040 B and 9045C in grams instead of milliliters.

6.0 Definitions

The STAT Analysis Corporation Quality Assurance Manual (QAM) contains the definitions of standard terms used in this SOP.

7.0 Interferences

7.1 The glass electrode, in general, is not subject to solution interferences from color, turbidity, colloidal matter, oxidants, reductants, or moderate (<0.1 molar solution) salinity.

7.2 Sodium error at pH levels >10 can be reduced or eliminated by using a low-sodium-error electrode.

7.3 Coatings of oily material or particulate matter can impair electrode response. These coatings can usually be removed by gentle wiping or detergent washing followed by rinsing with reagent water. An additional treatment with hydrochloric acid (1:10) may be necessary to remove any remaining film.

7.4 Temperature effects on the electrometric determination of pH arise from two sources. The first is caused by the change in electrode output at various temperatures. This interference should be controlled with instruments having temperature compensation or by calibrating the electrode-instrument system at the temperature of the samples. The second source of temperature effects is the change of pH due to changes in the sample as the temperature changes. This error is sample-dependent and cannot be controlled.

8.0 Safety

8.1 All samples must be assumed as hazardous and appropriate precautions taken during handling.

8.2 Safety glasses, gloves, lab coats and closed toe shoes are to be worn.

8.3 Other safety precautions must be conducted in accordance with the Chemical Hygiene Plan. Other actions can also be applied if deemed necessary. A reference file of material safety data sheets (MSDS) is available in each room for personnel involved in an analysis using chemicals.

9.0 Equipment and Supplies

9.1 Model 340 pH meters with electrode (a combination electrode that incorporates both measuring and referenced functions with solid, gel-type filling materials that require minimal maintenance).

9.2 Top loading balance, capable of weighing to 0.01 g

9.3 Glass Beaker, 50 mL, 100 mL and 250 mL

9.4 Magnetic stirrer with stir bar

9.5 Disposable plastic beakers

9.6 Glass or plastic storage bottles with caps

9.7 Metal or wooden spatulas

10.0 Reagents and Standards

The following reagents and standards are required to perform this procedure. When instructions are given on how to prepare a specific volume of a reagent or standard, larger or smaller volumes can be prepared as needed so long as the final concentrations remain the same. Any other deviations from the reagents or standards listed in this SOP could be detrimental to the quality of the data produced. Such deviations would have to be approved and documented (see SOP 230 Corrective Action).

10.1 Instructions for labeling and record keeping of reagents and standards are contained in SOP 1010 Analytical Standards and Reagents Receipt and Preparation.

10.2 Reagents – In methods where the purity of reagents is not specified, analytical reagent grade shall be used. Reagents of lesser purity than those specified by the test method shall not be used.

10.3 Standards

10.3.1 At least one of the standards must be traceable to a NIST traceable source when available. The manufacturer should include a certificate of analysis for each standard. If one is not provided, contact the manufacturer. Retain all certificates in the designated binder (see SOP 1010 Analytical Standards and Reagents Receipt and Preparation).

10.3.2 pH buffer solutions: Commercially purchased used for the ICAL. Buffers at pH 4 and 10. The solutions can be stored in the original container at room temperature for 1 year or as indicated per the manufacturer's instructions.

10.3.3 pH buffer solutions: Commercially purchased used for the ICV/CCV. These must be from a second source or different lot number from the ICAL buffer solutions. Buffers are at pH 2, 4, 7, 10, and 12.45. The solutions can be stored in the original container at room temperature for 1 year or as indicated per the manufacturer's instructions.

10.3.4 pH buffers may be transferred from the original container and stored in small plastic or glass vials for up to one week. The electrode may be placed directly in the vial for pH determination. Cap the vial after each use. Label each vial accordingly.

11.0 Sample Collection, Shipment, Preservation and Storage

11.1 Sample Collection

Samples should be collected in plastic (preferable) or glass bottles. All bottles must be thoroughly cleaned and rinsed with reagent water. The volume collected (minimum 100 mL or 4 oz) should be sufficient to insure a representative sample, allow for replicate analysis (if required), and minimize waste disposal.

11.2 Sample Preservation
Aqueous samples must be analyzed as soon as possible upon receipt at the laboratory. Store samples at 0.1 to 6 °C. Non-aqueous samples must be analyzed as soon as is reasonably possible upon receipt at the laboratory or when requested by the client. Store samples at 0.1 to 6 °C.

11.3 Sample Shipment and Handling
Samples should be received by the laboratory on ice (preferably in a cooler).

11.4 Sample Storage
Samples are stored refrigerated at 0.1 - 6°C. Sample analysis cannot be performed within holding time (15 minutes). See Section 5, Method Modifications.

12.0 Quality Control

The following details the QC requirements that apply to this analysis. Each Quality Control Indicator (QCI) provides information pertaining to either method or individual sample performance.

The results of these QCI samples are used to assess the acceptability of data.

Duplicates
Duplicates are defined as replicate aliquots of the same sample taken through the entire analytical procedure. The results from this analysis indicate the precision of the results for the specific sample using the selected method. The duplicate provides a usable measure of precision only when target analytes are found in the sample chosen for duplication.

Duplicates are analyzed at one per batch of 20 samples or fewer. Duplicates are performed on replicate aliquots of actual samples.

Samples chosen for duplicate analyses are rotated among different clients and/or different client projects. This is accomplished through communication between the Department Manager and the analyst. In addition, designated samples, as indicated by client request or contract requirement, are analyzed as laboratory duplicates.

13.0 Calibration and Standardization

Initial Calibration (ICAL)
In addition to achieving the reference method requirements for the minimum number of calibration standards and the acceptance criteria (statistics) for calibration curve fit, the following ICAL criteria also apply:

13.1 The ICAL must be a minimum of 2 standards.

13.2 The ICAL must be verified with a second source standard (ICV) prior to the analysis of samples.

13.3 The theoretical range of measurement for the instrument is 0 to 14 pH units.

13.4 MDL is not applicable for this test.

Initial Calibration Verification (ICV):
The following ICV criteria also apply:

13.5 Must be a second source standard from the ICAL standards or from a different manufacturer lot number.

13.6 Must be traceable to NIST when available.

Continuing Calibration Verification (CCV)
In addition to the method requirements, the following CCV criteria also apply:

13.7 May be repeated at the beginning of each analytical batch.

13.8 Must be repeated every 10 samples and at the end of each analytical batch.

13.9 If the CCV results obtained are outside the acceptance criteria, routine corrective actions must be performed. If routine corrective actions fail to produce an acceptable *second consecutive (immediate)* CCV, then either the lab has to demonstrate performance after corrective action with two consecutive successful CCVs, or a new ICAL must be performed. If the instrument has not demonstrated acceptable performance, sample analyses cannot continue until a new ICAL is established and verified with an ICV.

13.10 Records: Initial and Continuing Calibration Records will contain, at a minimum, the following:

Calibration date
Test method
Instrument
Analysis date
Analyst's initials or signature
Standard pH and number of standards
Response (appropriate units)
Evaluation of and Acceptance Limits for ICV analysis in order to judge calibration curve acceptance
Evaluation of and Acceptance Limits for CCV analysis in order to judge continuing calibration acceptance
Calibration Standards Solutions IDs

Table 13.1 Quick reference of Instrument Calibration Requirements

QCI	Frequency	Standards	Control Limits	Corrective Action
ICAL	Daily, or as needed	pH 4 and 10 buffers	N/A	Correct problem then repeat initial calibration
ICV	After ICAL	pH 7 buffer,	± 0.05 pH unit	Correct problem then repeat initial calibration
CCV	Beginning (optional), every 10 sample and end of batch	pH 7 buffer, as applicable to the 4 to 10 test range	± 0.1 pH unit	Correct problem then repeat CCV or repeat initial calibration
CCV	Beginning (optional) and after samples < 4	pH 2 buffer, as applicable to the test range	± 0.1 pH unit	Correct problem then repeat CCV or repeat initial calibration
CCV	After any sample with pH > 10	pH 12.45 buffer, as applicable to the test range	± 0.1 pH units*	Correct problem then repeat CCV or repeat initial calibration

* The 12.45 buffers is temperature sensitive. Record the test conditions (i.e., temperature) for comparison purposes to the certified value.

Balances - Be sure the balance is checked prior to use and performance criteria are met (see SOP 1040 General Laboratory Practices for Calibration of Balances).

14.0 Procedure

14.1 Instrument Set-Up (General)

14.1.1 Connect the electrode to the meter

14.1.2 Plug the AC power connector into the back of the unit and plug the adaptor into the AC power source.

14.1.3 Turn on the pH meter – on/off button.

14.1.4 Place the electrode in the solution, stir electrode in solution or use magnetic stirrer, allow meter to stabilize and read answer on display.

14.1.5 Turn off pH meter – on/off button.

14.2 Calibration

14.2.1 Erase any existing calibration data.

14.2.1.1. Press the "cal" button, then the "clear" button to remove the existing calibration.

14.2.1.2. The message "clr" appears in the numeric display. To confirm the removal of the calibration, press "clear" again.

14.2.2 Pour the ICAL solution (first pH buffer) into a clean beaker with stir-bar and place on magnetic stirrer.

14.2.3 Insert the electrode completely into the ICAL solution.

14.2.4 Press "read" key. Wait until the Auto-eye stops flashing, indicative of a stable reading.

14.2.5 Repeat the above steps 14.2.2 through 14.2.4 for the additionalcalibration buffers.

14.2.6 Press "cal" to complete calibration.

14.2.7 The instrument is now calibrated.

14.2.8 Analyze the ICV/CCV buffer according to Table 13.1. Take corrective action if sample acceptance criteria are not met.

14.3 pH Measurement – Aqueous Samples

14.3.1 Allow samples to come to room temperature (23 to 27°C) if possible.

14.3.2 Place the electrode in the sample solution (15 to 50 mL of sample in a clean beaker or disposable plastic cup with stir-bar) and place on magnetic stirrer. Swirling the electrode, instead of using a magnetic stir bar, in the solution is permitted provided that the solution is well mixed and a steady reading is obtained.

14.3.3 Read the answer on the digital display while stirring the electrode in the solution. Record the pH value in the logbook. Ensure that the temperature compensation is in effect.

14.3.4 Set the ON/OFF toggle switch to the OFF position when finished.

NOTE: For samples containing multiple phases, where the aqueous content is greater than 20%, remove approximately 20 mL of the aqueous phase. From the subsampled portion, follow the above procedure (14.3)

14.4 pH Measurement – Soil Samples

14.4.1 Weigh 20 g of soil (to the nearest 0.5 g) in a 50-mL beaker, record weight in logbook, add 20 g of reagent water, add a stir bar, and continuously stir the suspension for 5 minutes on the magnetic stirrer. Be sure to break up solid material as much as possible in order to obtain a homogeneous sample while stirring. Additional dilutions are allowed if working with hygroscopic soils and salts or other problematic matrices.

14.4.1.1 NOTE: There is a pH test for soil samples that is called "10% pH". This is a specific request and has its own test code in LIMS. For this test, perform the following: Weigh 10 g of soil (to the nearest 0.1 g) in a 250-mL beaker, add 100 g of reagent water, add a stir bar, and continuously stir the suspension for 5 minutes on the magnetic stirrer. Record the weight of the sample in the logbook.

14.4.2 Let the soil suspension stand for about 30 minutes to allow most of the suspended clay to settle out from the suspension or filter or centrifuge off the aqueous phase for pH measurement.

14.4.3 Place the electrode in the sample solution, immerse just below the suspension to obtain good contact.

14.4.4 Read the answer on the digital display. Record the pH value in the logbook.

14.4.5 Set the ON/OFF toggle switch located on the back of the unit to the OFF position when finished.

14.5 pH Measurement – Non-Aqueous Waste Samples

14.5.1 Weigh 20 g of waste sample (to the nearest 0.5 g) in a 50-mL beaker, add 20g of reagent water, add a stir bar, and continuously stir the suspension for 5 minutes on the magnetic stirrer. Record the weight of the sample in the logbook. Additional dilutions are allowed if working with hygroscopic wastes and salts or other problematic matrices.

14.5.2 Let the waste suspension stand for about 15 minutes to allow most of the suspended waste to settle out from the suspension or filter or centrifuge off aqueous phase for pH measurement. NOTE: If the waste is hygroscopic and absorbs all the reagent water, begin the determination again using 20 g of waste and 40 g of reagent water. NOTE: If the supernatant is multiphasic, decant the oily phase and measure the pH of the aqueous phase. The electrode may need to be cleaned if it becomes coated with an oily material.

14.5.3 Place the electrode in the sample solution, immerse just below the suspension to obtain good contact.

14.5.4 Read the answer on the digital display. Record the pH value.

14.5.5 Set the ON/OFF toggle switch located on the back of the unit to the OFF position when finished.

14.6 General Operating Techniques

14.6.1 Use very clean beakers or disposable cups.

14.6.2 Avoid cross-contamination between measurements by rinsing the electrode in reagent water and by rinsing the electrode and the beaker in the solution to be tested.

14.6.3 For best results, the solution temperature should remain constant during the readings. The ideal temperature is 25.0°C (77.0°F).

14.6.4 Make certain to sustain flow through the electrode while making your readings. Stirring helps prevent polarization, ensures that the solution is well mixed, and helps to maintain a uniform temperature within the solution.

14.6.5 When finished using the electrode, always rinse it in reagent water and store dry or in reagent water. Solutions which are allowed to dry on the electrode will eventually block the membrane and the surface area will be reduced. A new electrode may be required.

14.7 Troubleshooting and cleaning procedures can be found in the instrument manual.

15.0 Data Reduction, Calculations and Loading

15.1 The procedure for uploading data into the LIMS system is detailed in SOP 1400 LIMS.

15.2 Temperature correction: All readings displayed are automatically temperature compensated and corrected to the internationally accepted standard of 25°C.

15.3 Report results as pH @ 25°C.

16.0 Method Performance

Demonstration of Capability (DOC)
All parameters of interest must meet the method acceptance criteria before actual sample analyses begin. See SOP 1230 Training for the procedure to perform and document the DOC. The DOCs for the analysts performing this method are located in the analysts' training form folders located in the QA office files.

The ICV/CCV solution, pH 7 @ 25°C, may be used for calculating the DOC.

For each determination, calculate the mean recovery (x) and standard deviation (s). Compare x and s with the corresponding acceptance criteria for accuracy and precision, respectively. Note: x must be within 0.1 pH units @ 25°C and s must be less than 0.1 pH units @ 25°C. These limits are based upon the reference method. If x and s for the determinations meet the acceptance criteria, the system performance is acceptable and analysis of actual samples can begin. If any individual x falls outside the range for accuracy, or s exceeds the precision limit, then the system performance is unacceptable for the determination and corrective action must be taken.

Comparison to Reference Method Data
There is no reference method data for laboratory duplicate analyses of environmental test sample matrices.

In-House Control Limits
Method performance data is on file in the laboratory QC department. Comparison of method performance data for the laboratory to the reference method criteria occurs when laboratory in-house acceptance limits are generated. In-house generated data is compared to the specifications of the reference method. If the in-house limits are within the specifications of the reference method, the control limits are updated in LIMS. If the in-house limits are not within specifications, an investigation is performed to determine the cause(s) of the problem and a corrective action is completed. The analysis may continue until enough data points are collected to regenerate new control limits. Any QC data generated outside of reference method limits during that time frame is flagged.

The laboratory maintains performance records to document the quality of data that is generated. Method accuracy for samples is assessed and records maintained.

17.0 Pollution Prevention

The preparation of excessive volumes of laboratory reagents and standards shall be avoided so that waste and potential for pollution are minimized. Samples, reagents and standards shall be disposed in compliance with the laboratory waste disposal program and applicable waste disposal regulations. With the consent of the client, the samples may be returned to their origin for treatment.

Uncontaminated paper waste, glass and cans should be separated for recycling. Laboratory staff are required to protect the laboratory's and our clients' business information when disposing of recycling or waste from the facility.

18.0 Data Assessment and Criteria for Quality Control Measures

The laboratory must maintain records to document the quality of data that is generated. Ongoing quality checks are compared with established performance criteria to determine if the results of analyses meet the performance characteristics of the method. The data review is conducted according to SOP 1250 Data Review.

Duplicates

The results from laboratory Duplicates are designed to assess the precision of analytical results in a given matrix and are expressed as relative percent difference (RPD). See the STAT QAM, Section 5.4 for the calculation for RPD.

Results are compared to established acceptance criteria (in-house limits); Duplicate RPD limits are 10% for water samples and 20% for solid or waste samples.

For duplicates results outside established criteria corrective action must be documented, or the data for the duplicate sample is reported with appropriate data qualifying codes.

19.0 Corrective Actions for Out-of-Control Data

The process for handling corrective actions is found in SOP 230 Corrective Action.

If the CCV or lab duplicate recovery falls outside the designated acceptance range, the laboratory performance for that parameter is judged to be out of control, and the problem must be immediately identified and corrected. The analytical result for that parameter in the samples is suspect and is only reported for regulatory compliance purposes with the appropriate corrective action form. Immediate corrective action includes reanalyzing all affected samples by using any retained sample before the expiration of the holding time. Final data results must be qualified in the client report for reported results not meeting the laboratory-defined criteria.

1) Review standards preparation logbooks. Check all calculations and ensure dilution factors are properly recorded.

2) Re-prepare the suspected standard or QC sample to identify possible preparation errors of the standard or QC sample.

3) Re-Analyze the samples when the CCV is not within acceptable limits.

4) Perform routine preventative maintenance following manufacturer's specification. Record all maintenance in the logbook.

20.0 Contingencies for Handling Out-of-Control Or Unacceptable Data

Every effort is made to prevent problems from occurring. When out of control or unacceptable data occurs the first option is to identify the problem and reanalyze the samples within the holding times. When this is not possible, the QA Manager and/or the Laboratory Director reviews data and discusses options with the client. Reanalysis or reporting the data with qualification are alternatives. Out of control or unacceptable data reported to the client must include the data qualifier, flag and discussion on the rationale for reporting.

20.1 The process for handling unacceptable and out of control data is found in the Laboratory QAM Section 11. The reporting of data that is out of control must be approved and documented by Quality Assurance Manager and either the Technical Manager or the Laboratory Director.

21.0 Waste Management

The STAT Analysis Corporation SOP 1130 Waste Disposal identifies proper waste management practices for the chemicals and biological materials used in this procedure. Samples are stored and discarded accordance with SOP 1130 Waste Disposal. Buffer solutions may be disposed of in the sink.

22.0 References

22.1 Methods 9040B and 9045C, U.S. EPA SW-846 "Test Methods for Evaluating Solid Waste, Physical/Chemical Methods" Update III, December 1996
22.2 Method 150.1, EPA Manual 600/4-079-020, Revised March 1983
22.3 Instruction Manual for Bench pH Meter
22.4 STAT Analysis Corporation Quality Assurance Manual
22.5 STAT SOP 003 Chemical Hygiene Plan
22.6 STAT SOP 230 Corrective Actions
22.7 STAT SOP 1000 Control and Use of Laboratory Notebooks
22.8 STAT SOP 1010 Standard and Reagent Preparation
22.9 STAT SOP 1040 General Laboratory Procedures
22.10 STAT SOP 1130 Waste Disposal
22.11 STAT SOP 1230 Training
22.12 STAT SOP 1250 Data Review
22.13 STAT SOP 1400 LIMS

23.0 Forms, Figures, Tables, Diagrams, Flowcharts, Attachments or Validation Data

Not applicable to the SOP.

STAT Analysis Corporation:

STANDARD OPERATING PROCEDURE 4510

METALS ANALYSIS BY INDUCTIVELY COUPLED PLASMA - MASS SPECTROMETRY (EPA METHOD 6020 AND EPA METHOD IO-3.5)

Revision 05

Effective Date: May 16, 2005

Author: Dennis Jachim, Bruce Anderson

Printed Name	Signature/Date
Bruce Anderson Inorganic Manager	_____
Laurie Fetterman QA Manager	_____
Dennis Jachim Technical Manager	_____
Donald Cortes Laboratory Director	_____

This Standard Operating Procedure has been prepared for the sole use of STAT Analysis Corporation.

Copy Number: _____

The absence of a Copy Number indicates this is an uncontrolled copy of the document supplied for information only.

Table of Contents

	Title Page	1
	Table of Contents	2
1.	Identification of Test Methods	3
2.	Applicable Matrix or Matrices	3
3.	Detection Limits	3
4.	Scope and Application	3
5.	Summary of Test Method	4
6.	Definitions	4
7.	Interferences	5
8.	Safety	6
9.	Equipment and Supplies	6
10.	Reagents and Standards	7
11.	Sample Collection, Preservation, Shipment and Storage	12
12.	Quality Control	12
13.	Calibration and Standardization	15
14.	Procedure	17
15.	Data Reduction, Calculations and Loading	23
16.	Method Performance	24
17.	Pollution Prevention	25
18.	Data Assessment and Criteria for Quality Control Measures	26
19.	Corrective Actions for Out-Of-Control Data	28
20.	Contingencies for Handling Out-Of-Control Or Unacceptable Data	29
21.	Waste Management	29
22.	References	29
23.	Forms, Figures, Tables, Diagrams, Flowcharts, Attachments or Validation Data	30
	Attachment 1 MDLs and Reporting Limits	31
	Attachment 2 ICS Solutions and Concentrations	32
	Attachment 3 LCS/MS Spiking Solution Concentrations	33
	Attachment 4 Tune Adjustment Parameters	34

1.0 IDENTIFICATION OF TEST METHOD

SOP Title: Metals Analysis by Inductively Coupled Plasma - Mass Spectrometry (EPA Method 6020 and EPA Method IO-3.5) is abbreviated as ICP-MS in the laboratory records.

2.0 APPLICABLE MATRICES

Inductively coupled plasma-mass spectrometry (ICP-MS) is applicable to the determination of µg/L and sub-µg/L concentrations of a large number of elements in water samples and in waste extracts or digests. When dissolved constituents are required, samples must be filtered and acid-preserved prior to analysis. No digestion is required prior to analysis for dissolved elements in water samples. Acid digestion prior to filtration and analysis is required for aqueous, solids, and air filters for which total (acid-leachable) elements are required.

3.0 DETECTION LIMITS

The lab follows the procedure found in 40CFR Part 136B to determine the MDL for each matrix type on an annual basis. See the STAT Analysis SOP 1210 Method Detection Limits for the MDL procedure, frequency, and acceptance criteria. The MDLs measured by the lab and all supporting documentation are in the laboratory QA files for review.

The laboratory determined method detection limit (MDL) must always be less than the reporting limit (RL). The RLs will usually range from three to ten times the laboratory measured MDLs but this relationship may vary dependent on dilution, reduced sample size to avoid saturation of the detector, matrix interferences, moisture adjustments (in solid samples), or method-specified requirements. Attachment 1 contains the current MDLs and reporting limits (RLs) for soils, waters and air filters.

4.0 SCOPE AND APPLICATION

4.1 Inductively coupled plasma-mass spectrometry (ICP-MS) is applicable to the determination of sub-µg/L concentrations of a large number of elements in water samples and in waste extracts or digests. When dissolved constituents are required, samples must be filtered and acid-preserved prior to analysis. No digestion is required prior to analysis for dissolved elements in water samples. Acid digestion prior to filtration and analysis is required for groundwater, aqueous samples, industrial wastes, soils, sludges, sediments, air filters, wipes, and other solid wastes for which total (acid-leachable) elements are required.

4.2 ICP-MS has been historically applied to the determination of over 60 elements in various matrices. Analytes determined at this laboratory for this method are listed in Attachment 1 (along with the masses used for determination). If Method 6020 is used to determine any analyte not listed in Attachment 1, it is the responsibility of the laboratory to demonstrate the accuracy and precision of this method in the material to be analyzed. The analyst is always

required to monitor potential sources of interferences and take appropriate action to ensure data of known quality (see Section 14.4 Qualitative Analysis).

4.3 This method is restricted to use by or under the supervision of analysts experienced in the use of ICP-MS and knowledgeable in the recognition and correction of spectral, chemical, and physical interferences in ICP-MS. Each analyst must demonstrate the ability to generate acceptable results with this method.

5.0 SUMMARY OF TEST METHOD

5.1 Samples that require total "acid-leachable" values must be digested using appropriate sample preparation methods prior to analysis.

5.2 EPA methods 6020 and IO-3.5 describes the multi-elemental determination of analytes by ICP-MS. The method measures ions produced by a radio frequency inductively coupled plasma. Analyte species originating in a liquid are nebulized and the resulting aerosol transported by argon gas into the plasma. The ions produced are entrained in the plasma gas and introduced, by means of an interface, into a mass spectrometer. The ions are sorted according to their mass-to-charge ratios and quantified with a channel electron multiplier. Interferences must be assessed and valid corrections applied or the data flagged to indicate problems. Interference correction must include compensation for background ions contributed by the plasma gas, reagents, and constituents of the sample matrix. An appropriate internal standard is required for each analyte determined by ICP-MS.

5.3 Method Modifications from Reference – This SOP is based on EPA Method 6020 and incorporates IO-3.5 for TSP/PM10 high-volume filters except that: 1) polypropylene volumetric flasks are used since analysis for boron is occasionally required, 2) the instrument resolution is set for 1 amu peak width at 10% peak height according to 6020 but is less stringent than IO-3.5, 3) samples which fail high or low for one or more internal standards are diluted as needed to bring within range for the internal standard, 4) A matrix spike and matrix spike duplicate are digested and analyzed, since a duplicate sample is not typically analyzed, 5) Dilution test may be performed on aqueous matrices. Non-aqueous matrices are already diluted before analysis 6) reagent water must be at least Type II (ASTM) for all standards, solutions, and sample preparation according to 6020 but is less stringent than IO-3.5, 7) internal standards and tuning solutions cover the entire mass range of analysis, but the elements used vary slightly from IO-3.5, 8) the MDLs are determined annually according to the requirements described in SOP 1210 Method Detection Limits 9) the ICB/CCB acceptance limit is the lower reporting limit and not the MDL per IO-3.5, since we do not report down to the MDL. 10) Germanium instead of yttrium is used as an internal standard, since yttrium is found in environmental samples.

6.0 DEFINITIONS

The STAT Analysis Quality Assurance Manual Section 19.0 contains all the definitions of standard terms used in SOPs.

7.0 INTERFERENCES

7.1 Isobaric elemental interferences in ICP-MS are caused by isotopes of different elements forming atomic ions with the same nominal mass-to-charge ratio (m/z). A data system must be used to correct for these interferences. This involves determining the signal for another isotope of the interfering element and subtracting the appropriate signal from the analyte isotope signal. Since commercial ICP-MS instruments nominally provide unit resolution at 10% of the peak height, very high ion currents at adjacent masses can also contribute to ion signals at the mass of interest. Although this type of interference is uncommon, it is not easily corrected, and samples exhibiting a significant problem of this type could require resolution improvement, matrix separation, or analysis using another verified and documented isotope, or use of another method.

7.2 Isobaric molecular and doubly charged ion interferences in ICP-MS are caused by ions consisting of more than one atom or charge, respectively. Most isobaric interferences that could affect ICP-MS determinations have been identified in the literature. Examples include $ArCl^+$ ions on the ^{75}As signal and MoO^+ ions on the cadmium isotopes. While the approach used to correct for molecular isobaric interferences is demonstrated below using the natural isotope abundances from the literature, the most precise coefficients for an instrument can be determined from the ratio of the net isotope signals observed for a standard solution at a concentration providing suitable (<1 percent) counting statistics. Because the ^{35}Cl natural abundance of 75.77 percent is 3.13 times the ^{37}Cl abundance of 24.23 percent, the chloride correction for arsenic can be calculated (approximately) as follows (where the ^{38}Ar ^{37}Cl contribution at m/z 75 is a negligible 0.06 percent of the ^{40}Ar ^{35}Cl signal): corrected arsenic signal (using natural isotopes abundances for coefficient approximations) = (m/z 75 signal) - (3.13) (m/z 77 signal) + (2.73) (m/z 82 signal), (where the final term adjusts for any selenium contribution at 77 m/z).

NOTE: Arsenic values can be biased high by this type of equation when the net signal at m/z 82 is caused by ions other than $^{82}Se^+$, (e.g., $^{81}BrH^+$ from bromine wastes. Similarly, corrected cadmium signal (using natural isotopes abundances for coefficient approximations) = (m/z 114 signal) - (0.027)(m/z 118 signal) - (1.63)(m/z 108 signal), (where last 2 terms adjust for any tin or MoO^+ contributions at m/z 114).

NOTE: Cadmium values will be biased low by this type of equation when $^{92}ZrO^+$ ions contribute at m/z 108, but use of m/z 111 for Cd is even subject to direct ($^{94}ZrOH^+$) and indirect ($^{90}ZrO^+$) additive interferences when Zr is present.

NOTE: As for the arsenic equation above, the coefficients in the Cd equation are **ONLY** illustrative. The most appropriate coefficients for an instrument can be determined from the ratio of the net isotope signals observed for a standard solution at a concentration providing suitable (<1 percent) counting precision. The accuracy of these types of equations is based upon the constancy of the OBSERVED isotopic ratios for the interfering species. Corrections that presume a constant fraction of a molecular ion relative to the "parent" ion have not been found to be reliable, e.g., oxide levels can vary. If a correction for an oxide ion is based upon the ratio of parent-to-oxide ion intensities, the correction must be adjusted for the degree of oxide formation by the use of an appropriate oxide internal standard previously demonstrated to form a similar level of oxide as the interferent. This

type of correction has been reported for oxide-ion corrections using ThO^+ /Th^+ for the determination of rare earth elements. The use of aerosol, desolvation, and/or mixed plasmas has been shown to greatly reduce molecular interferences. These techniques can be used provided that method detection limits, accuracy, and precision requirements for analysis of the samples can be met.

7.3 Physical interferences are associated with the sample nebulization and transport processes as well as with ion-transmission efficiencies. Nebulization and transport processes can be affected if a matrix component causes a change in surface tension or viscosity. Changes in matrix composition can cause significant signal suppression or enhancement. Dissolved solids can deposit on the nebulizer tip of a pneumatic nebulizer and on the interface skimmers (reducing the orifice size and the instrument performance). Total solid levels below 0.2% (2,000 mg/L) have been currently recommended to minimize solid deposition. An internal standard can be used to correct for physical interferences, if it is carefully matched to the analyte so that the two elements are similarly affected by matrix changes. When the intensity level of an internal standard is less than 30 percent or greater than 120 percent of the intensity of the first standard used during calibration, the sample must be reanalyzed after a fivefold (1+4) or greater dilution has been performed.

7.4 Memory interferences can occur when there are large concentration differences between samples or standards which are analyzed sequentially, deposition on the sampler and skimmer cones, spray chamber design, and the type of nebulizer affect the extent of the memory interferences which are observed. The rinse period between samples must be long enough to eliminate significant memory interference. Whenever an unusually concentrated sample is encountered, the sample after it may need to be reanalyzed to check for cross contamination.

8.0 SAFETY

Proper personal protective equipment including safety glasses, gloves and a lab coat are required during different parts of this method. Other safety precautions must be conducted in accordance with the Chemical Hygiene Plan. Other actions can also be applied if deemed necessary. A reference file of Material Safety Data Sheets (MSDS) for all reagents/chemical involved in this method is available to all personnel.

Stock metal standards and acid solutions (strong oxidizers) may pose potential health risks. Extreme care should be utilized when handling these solutions.

9.0 EQUIPMENT AND SUPPLIES

The following apparatus is recommended for performing this procedure. Equivalent items can be used, if with their use, the analytical and QA/QC requirements in this SOP can be met.

9.1 Inductively coupled plasma-mass spectrometer: Aglient 7500i or equivalent.

9.1.1 A system capable of providing resolution, better than or equal to 1.0 amu at 10% peak height is required. The system must have a mass range from at least 6 to 240 amu and

a data system that allows corrections for isobaric interferences and the application of the internal standard technique. Use of a mass-flow controller for the nebulizer argon and a peristaltic pump for the sample solution are recommended.

9.1.2 Chiller - Neslab CT 100 or equivilent

9.1.3 Argon gas supply – high purity grade (99.99%).

9.1.4 Data system - An Agilent Kayak computer system using 3365 Chemstation Version C.00.01 to interpret spectral data is attached to the ICP-MS.

9.1.5 Autosampler – Cetac ASX-450 or equivalent.

9.2 Autopipettes – 0.01 to 0.10 mL, 0.1 to 1.0 mL, 1.0 to 5.0 mL.

9.3 Dispensing pipettes – 1 to 10 mL

9.4 Polypropylene Volumetric Flasks, - 50 mL, 100 mL, 250 mL, and 500 mL with screw caps. See section 14.8 for the procedure of checking the flask volume.

9.5 Plastic Tubes – 14 mL culture tubes and 50-mL graduated with screw caps.

9.6 Plastic bottles – 250 mL, 500 mL and one liter with Teflon screw caps

10.0 REAGENTS AND STANDARDS

The following reagents and standards are required to perform this procedure. When instructions are given on how to prepare a specific volume of a reagent or standard, larger or smaller volumes can be prepared as needed so long as the final concentrations remain the same. Any other deviations from the reagents or standards listed in this SOP could be detrimental to the quality of the data produced. Such deviations would have to be approved and documented (see SOP 230 Corrective Action).

Instructions for labeling and record keeping of reagents and standards are contained in SOP 1010 Analytical Standards and Reagents Receipt and Preparation. All standards solutions and QC solutions are stored at room temperature in plastic bottles.

10.1 Analytical reagent grade chemicals shall be used in all tests. Unless otherwise indicated, all reagents shall conform to the specifications of the Committee on Analytical Reagents of the American Chemical Society, where such specifications are available.

10.2 Reagent water - All references to water in this SOP refers to Type II reagent water (in-house system).

10.3 Calibration Stock Standard - Standard solutions can be prepared from pure standard materials or purchased as certified solutions. The routine laboratory practice is to purchase these standards from approved vendors. These stock standard solutions are purchased or prepared from ultra-high purity grade chemicals or metals (99.99 or greater purity) for most elements. The stock standards for individual elements are usually at concentrations of 1000 or 10,000 mg/L in solution. Custom blend stock standard solutions may also be purchased and used. Stock standard solutions and QC solutions are stored at room temperature in their original containers.

10.3.1 Secondary Calibration Stock Standard – These solutions are made using the individual Stock Standard solutions. Three secondary solutions are prepared by combining and diluting the individual stock standard solutions to levels in the linear range for the instrument in a matrix consisting of 2% (v/v) HNO_3 in reagent water. When preparing the secondary stock standards, each stock solution must be initially verified to determine correct preparation and/or the presence of impurities. Care must be taken when preparing the mixed standards that the elements are compatible and stable. The following amounts of each Stock Standard solution are pipetted into a 250 mL volumetric flask. The solution is brought to volume with 2% nitric acid (HNO_3). The final concentration of each component is listed in Table 1. These Secondary Stock Standard solutions are the source solutions to prepare the calibration standards in Section 10.4. Fresh mixed standards must be prepared as needed with the realization that concentrations can change on aging. Calibration standards must be initially verified using a quality control standard and monitored weekly for stability.

Table 1 Secondary Calibration Stock Standard Solutions

Secondary Stock Solution	Elements	Conc. Stock (mg/L)	Vol. Stock (mL)	Final Volume (mL)	Final Conc. (mg/L)
A	Al, As, B, Ba Be, Cd, Cr, Co, Cu, Pb, Mn, Ni, Se, Tl, V, Zn	1000 each	2.5 mL each	250	10
	Sb, Mo, Sn, Ti		1.25 mL each		5
B	Ag	1000 each	2.5 mL each	250	10
C	Na, Ca, Mg, K, Fe	10,000 each	2.5 mL each	250	100

10.4 Calibration standards - Four calibration standards are prepared. Calibration standards in current use: 1, 10, 100, and 200 mg/L (for all elements except Ca, Fe, K, Mg, Mo, Na, Sb, Sn , and Ti (see Table 2). The following amounts of Secondary Stock Standard Solutions A, B, and C are pipetted into a 50 mL volumetric flask. Each calibration standard solution is brought to volume with 2% nitric acid (HNO_3). The final concentration of each component is listed in Table 2. Level 1 Calibration standard can be prepared by taking 5 mL of level 2 and diluting to 50 mL.

Table 2 Calibration Standards

Level	Volume (µL) Secondary Stock A and B	Volume (µL) Secondary Stock C	Final Volume (mL)	Final Conc. Trace Elements * (µg/L)	Final Conc. of Sb, Mo, Sn, & Ti (µg/L)	Final Conc. Major Elements (µg/L) Na, Ca, Mg, K, Fe
1	5mL of level 2 standard		50	1	0.5	10
2	50	50	50	10	5	100
3	500	500	50	100	50	1000
4	1000	5000	50	200	100	10000

* Except Sb, Mo, Sn, and Ti.

10.5 ICP-MS Internal Standard Stock Solutions: A solution containing 100 µg/mL ^{6}Li, ^{45}Sc, ^{159}Tb, ^{89}Y, ^{115}In and ^{209}Bi. Single element Germanium Standard 1000 mg/L. These solutions are purchased commercially.

10.5.1. Working Internal Standard Solution (1 mg/L): Pipette 1.0 mL of the mixed ICP-MS Internal Standard Stock Solution and 0.10 mL of the Germanium Standard into a 100 mL volumetric flask and bring to volume with 2% nitric acid (HNO_3). The working internal standard solution is added to a reservoir and will be added on-line to each standard, QC sample, and test sample at the time of analysis using a second channel of the peristaltic pump and an appropriate mixing manifold. This will deliver approximately 40 mg/L at the instrument for every sample/standard analyzed. Generally, an internal standard should be no more than 50 amu removed from the analyte.

10.6 ICP-MS Tuning Solution Stock 10 mg/L: Commercially purchased. This solution contains 10 mg/L each of Ce, Tl, Li and Y.

10.6.1. Working ICP-MS Tuning Solution 10 µg/L: Pipette 0.25 mL of the ICP-MS Tuning Stock Solution into a 250 mL volumetric flask and bring to volume with 2% nitric acid (HNO_3).

10.7 Stock 6020 Tune Check Solution: A solution containing elements representing all of the mass regions of interest (10 mg/L each of Li, Co, In, and Tl) must be prepared to verify that the resolution and mass calibration of the instrument are within the required specifications. This solution is also used to verify that the instrument has reached thermal stability. Purchased commercially.

10.7.1. Working 6020 Tune Check Solution 100 µg/L: Pipette 1.0 mL of the Stock 6020 Tune Check Solution into a 100 mL volumetric flask and bring to volume with 2% nitric acid (HNO_3).

10.8 Stock P/A Factor Tuning Solution (10 mg/L): Using multi-element Standards prepare a 10 mg/L Standard in 2% Nitric Acid.

10.8.1. Working P/A Factor Tuning solution 100 µg/L: Pipette 1.0 mL of the Stock 6020 Tune Check Solution into a 100 mL volumetric flask and bring to volume with 2% nitric acid (HNO_3).

NOTE: Working Calibration Standards 1, 2, 3, and 4 may also be used to determine P/A Factors.

10.9 ICP-MS Interference Check Solutions A and AB: Purchased commercially. See Attachment 2 for concentrations.

Working ICS Solutions:

10.9.1. ICS-A: Pipette 20.0 mL of ICP-MS Interference Check Solution A and 2 mL of concentrated Nitric Acid into a 100 mL volumetric flask and bring to volume with reagent water. ICS solution A must be prepared fresh weekly.

10.9.2. ICS-AB: Pipette 20.0 mL of ICP-MS Interference Check Solution AB and 2 mL of concentrated Nitric Acid into a 100 mL volumetric flask and bring to volume with reagent water. ICS solution AB must be prepared fresh weekly. The analyst should be aware that the solution might precipitate silver more quickly.

10.10 Laboratory Control Sample/Matrix Spike Stock - The LCS/matrix spike is prepared from individually purchased elements or custom blend stock standards. The Calibration Verification Stock Standards or Independent Stock Standards may be used to prepare the solution. The LCS/Matrix Spike Stock is prepared according to Table 3 below. Fill a 1000 mL volumetric flask with 400 mL of 2% v/v nitric acid. Pipette the appropriate volume of each analyte into the flask and bring to volume with 2% v/v nitric acid. This solution has a shelf life of six months.

Table 3 Laboratory Control Sample/Matrix Spike Stock

Elements	Conc. Stock (mg/L)	Vol. Stock (mL)	Final Volume (mg/L)	Final Conc. (mg/L)
Al, As, B, Ba Be, Cd, Cr, Co, Cu, Pb, Mn, Ni, Se, Tl, V, Zn	1000 each	25 mL each	1000	25
Sb, Mo, Sn, Ti	1000 each	12.5 mL ea.		12.5
Ag	1000 each	10 mL each		10
Na, Ca, Mg, K, Fe	10,000 each	10 mL each		100

Spike with one milliliter of this stock solution per 50 ml digestate when preparing the LCS, LCSD, MS, MSD. For the Post Digestion Spike (PDS) samples, spike in the ratio of 1 mL per 50 mL digestate.

10.10.1 If ambient air filters are to be analyzed for Barium or Zinc, additional spike will need to be added. The additional spike should have a concentration of 24 mg/L of Barium and 0.5 mg/L of Zinc. Spike with 1 mL of the Barium and Zinc spike. To prepare this solution, add 100 mL of 2% HNO_3 to a 250 mL volumetric flask.

Pipette 6 mL of 1000 mg/L Ba standard and 0.125 mL of 1000 g/mL Zn standard. Dilute to volume.

10.11 Calibration Verification Stock Standard Solutions (ICV/CCV) – The Calibration Verification Stock Standard Solutions A and B are prepared from 1000mg/L single element standards. These solutions are prepared by combining and diluting individual stock standard to levels in the linear range for the instrument in a matrix consisting of 2 percent (v/v) HNO_3 in reagent water. Prior to preparing the calibration verification stock standards, each stock solution must be analyzed to determine correct preparation and/or the presence of impurities. Care must be taken when preparing the mixed standards that the elements are compatible and stable. The following amounts of each Stock Standard solution are pipetted into a 250 mL volumetric flask. The solution is brought to volume with 2 percent (v/v) HNO_3 in reagent water. The final concentration of each component is listed in Table 4. These Calibration Verification Stock Standard Solutions are the source solutions to prepare the Initial Calibration Verification (ICV), and Continuing Calibration Verification (CCV) standards. Fresh mixed standards must be prepared as needed with the realization that concentrations can change on aging. Calibration standards must be initially verified using a quality control standard and monitored for stability.

Table 4. Calibration Verification Stock Standard Solutions (ICV/CCV)

Secondary Stock Solution	Elements	Conc. Stock (mg/L)	Vol. Stock (mL)	Final Volume (mL)	Final Conc. (mg/L)
A	Al, As, B, Ba Be, Cd, Cr, Co, Cu, Pb, Mn, Ni, Se, Tl, V, Zn	1000 each	2.5 mL each	250	10
	Sb, Mo, Sn, Ti	1000 each	1.25	250	5
	Na, Ca, Mg, K, Fe	10,000 each	2.5 mL each	250	100
B	Ag	1000 each	2.5 mL each	250	10

10.11.1 Initial Calibration Verification Standard (ICV) - To a 100-mL volumetric flask add about 80 mL of 2% Nitric Acid (HNO_3). Pipette 0.5 ml of secondary stock solutions A and B into this flask and dilute to the mark with 2 percent (v/v) HNO_3 .

10.11.2 Continuing Calibration Verification Standard (CCV) – To a 250-mL volumetric flask add about 200 mL of 2% Nitric Acid HNO_3). Pipette 2.5 ml of secondary stock solutions A and B into a 250-ml flask and dilute to the mark with 2 percent (v/v) HNO_3.

10.12 Blanks: Three types of blanks are required for the analysis. The calibration blank is used in establishing the calibration curve. The method blank is used to monitor for possible contamination resulting from the sample preparation procedure. The rinse blank is used to flush the system between all samples and standards.

10.12.1 The calibration blank consists of the same concentration(s) of the same acid(s) used to prepare the calibration standard solutions of the analytes (usually 2 % HNO_3in reagent water).

10.12.2 The method (or digestion) blank must be carried through the complete digestion procedure and contain the same volumes of reagents as the sample solutions.

10.12.3 The rinse blank consists of 2% HNO_3 in reagent water. Prepare a sufficient quantity to flush the system between standards and samples.

10.13 Nitric Acid: Acids used in the preparation of standards and for sample processing must be of high purity. Redistilled acids are recommended because of the high sensitivity of ICP-MS. Many more molecular-ion interferences are observed on the analytes when hydrochloric and sulfuric acids are used.

10.13.1 1:1 HNO_3: Cautiously and slowly add 100 mL concentrated HNO_3 to 100 mL of reagent water.

10.13.2 2% v/v HNO_3: Cautiously and slowly add 20 mL concentrated HNO_3 to a 1000 mL volumetric flask and bring to volume with reagent water and mix.

10.14 Argon gas supply: high-purity grade (99.99%).

11.0 SAMPLE COLLECTION, PRESERVATION, AND HANDLING

11.1 The recommended containers used to collect samples for the determination of metals are polyethylene or fluorocarbon (TFE or PFA): 500 mL for water samples and 4 to 8 oz jars for soil samples.

11.2 Samples may be transported to the laboratory and stored at room temperature. Solid samples may be stored under refrigeration at between 0.1 and 6.0°C until time of digestion. Digestion and analysis must be within 180 days from sampling date. Sample digestates are stored at room temperature.

11.3 Aqueous samples must be preserved with 1:1 HNO_3 to a pH < 2.

11.4 For proper handling and storage of the PM10/SPM filters, see SOP 3115 Extraction of High Volume Filters.

12.0 QUALITY CONTROL

The following details the QC requirements that apply to this analysis. Each Quality Control Indicator (QCI) provides information pertaining to either method or individual sample performance. Our goal is to produce defensible data of known and documented quality. The results of these QCI samples are used to assess the acceptability of data.

12.1 **Blanks**

Method Blank analysis is performed to determine if any contamination is present in the analytical process and is used to evaluate acceptance of the batch of samples. A method blank shall be prepared once per preparation batch of 20 or less samples per matrix type. If more than 20 samples are prepared a second blank shall be prepared after the twentieth sample. The method blank shall be processed through all preparatory steps used for the

samples, including cleanup procedures. The blank shall be analyzed using the same instrument and conditions as the samples.

The Calibration Blank is used to monitor the initial level of contamination in the reagent solutions prior to initial calibration.

The Rinse Blank is used to monitor the ICP-MS system for potential cross-contamination from one sample to another or for residual contamination in the system.

12.2 **Initial Calibration Verification (ICV)**

An Initial Calibration Verification (ICV) standard containing all of the target analytes reported in this method (refer to section 10.11.1) shall be analyzed immediately after the completion of the initial calibration. The ICV shall be purchased from or prepared from second source standards to verify analyte concentrations.

12.3 **Continuing Calibration Verification (CCV)**

A CCV standard containing all of the target analytes reported in this method (refer to section 10.11.2) shall be analyzed after every tenth sample. The CCV standard shall be at a different concentration than the ICV, and shall be used to confirm the system is in calibration.

12.4 **Laboratory Control Sample (LCS)**

The LCS is used to evaluate the performance of the total analytical system, including all preparation and analysis steps. The LCS shall be prepared once per preparation batch of 20 or less samples per matrix type. If more than 20 samples are prepared a second LCS shall be prepared after the twentieth sample. The LCS shall be processed through all preparatory steps used for the samples, including cleanup procedures. The LCS shall be analyzed using the same instrument and conditions as the samples. Refer to section 10.10 for LCS analytes and concentrations.

12.5 **Duplicates**

Duplicates of field samples or of the LCS must be prepared in compliance with the method requirements and client directives. Note: the analysis of the Matrix Spike Duplicate (MSD) is used as a substitute for the laboratory duplicate. In those cases when there is insufficient sample to perform either a duplicate analysis or MSD analysis or the sample cannot be divided (e.g., wipes), the duplicate analysis of the LCS (LCS/LCSD) is used to judge the precision of the analytical results.

12.6 **Matrix Spike and Matrix Spike Duplicate (MS/MSD)**

MS/MSDs indicate the effect of the sample matrix on the precision and accuracy of the results generated using the selected method. This information does not determine the validity of the entire batch. MS/MSDs must be analyzed at a minimum of 1 per 20 samples per matrix per preparation procedure, or as specified by the required test method. If an MS/MSD pair is not analyzed in the preparation batch, an LCS/LCSD pair is analyzed. Samples chosen for matrix spiking are rotated among different clients and/or different client projects. This is accomplished through communication between the Department Manager and the analyst. In addition, designated samples, as indicated by client request or

contract requirement, are matrix spiked. The MS/MSD pair shall be processed through all preparatory steps used for the samples. They shall be analyzed using the same instrument and conditions as the samples. Refer to section 10.10 for MS analytes and concentrations. Some clients may require different spiking levels and/or target analytes. These specific needs are documented on the request for analysis forms.

12.7 **Internal Standards**

The internal standards for this method are used to monitor physical and matrix interferences and they are added to all samples, standards, and blanks. Refer to section 10.5 for preparation and concentration instructions.

12.8 **Interference Check Solutions**

The interference check solution (ICS) is prepared to contain known concentrations of interfering elements that will demonstrate the magnitude of interferences and provide an adequate test of any corrections. Chloride in the ICS provides a means to evaluate software corrections for chloride-related interferences such as $^{35}Cl^{16}O^{+}$ on ^{51}V and $^{40}Ar^{35}Cl^{+}$ on 75As+. Iron is used to demonstrate adequate resolution of the spectrometer for the determination of manganese. Molybdenum serves to indicate oxide effects on cadmium isotopes. The other components are present to evaluate the ability of the measurement system to correct for various molecular-ion isobaric interferences. The ICS is used to verify that the interference levels are corrected by the data system within quality control limits. The ICS pair, solutions A and AB, is analyzed after calibration, every twelve hours of analysis, and at the end of the analytical batch. Refer to Section 10.9 for the preparation of these solutions.

Note: For ambient air filters, the ICS pair is analyzed every eight hours of analysis, and at the end of the analytical batch.

12.9 **Serial Dilutions**

If the analyte concentration is within the linear dynamic range of the instrument and sufficiently high (minimally, a factor of at least 100 times greater than the concentration in the reagent blank, an analysis of a fivefold (1+4) dilution must agree within 10% of the original determination. If not, an interference effect must be suspected. One dilution test may be included for each twenty samples (or less) in a batch.

12.10 **Post-Digestion Spike**

This test may be applied for new or unusual matrices. An analyte spike added to a portion of a prepared sample, or its dilution, should be recovered to within 75 to 125 %R of the known value or within the laboratory derived acceptance criteria. The spike addition should be based on the indigenous concentration of each element of interest in the sample. If the spike is not recovered within the specified limits, the sample must be diluted and reanalyzed to compensate for the matrix effect. Results must agree to within 10% of the original determination. The use of a standard-addition analysis procedure may also be used to compensate for this effect.

13.0 CALIBRATION AND STANDARDIZATION

Calibrate the instrument after tuning to generate an acceptable Tune Report (section 14.2.1), and setting the Pulse/Analog factors for each analyte.

Note: Generating a tune report and setting the Pulse/Analog factors needs to be done only once each day. After calibration the software goes immediately into sample analysis. Step by step instructions to calibrate are listed in the procedure in section 14.

Initial Calibration (ICAL)
In addition to achieving the reference method requirements for the minimum number of calibration standards and the acceptance criteria (statistics) for calibration curve fit, the following ICAL criteria also apply:

13.1 The ICAL must be a minimum of two standards, not including a blank. Flush the system with the rinse blank between each standard solution. Use the average of at least three integrations for both calibration and sample analyses. All masses that could affect data quality should be monitored to determine potential effects from matrix components on the analyte peaks.
13.2 The ICAL must be verified with a second source standard (ICV) prior to the analysis of samples.
13.3 Results of samples not within the linear range of the instrument must be qualified on the final report. Dilute the sample and reanalyze in order to achieve a result within the linear range of the instrument.
13.4 The lowest calibration standard may establish the reporting limit: see Attachment 1 for analyte reporting limits (RL). The RL must be greater than the detection limit.

Initial Calibration Verification (ICV)
In addition to the method requirements, the following ICV criteria also apply:

13.5 Must be a second source standard from the ICAL standards or from a different manufacturer lot number.
13.6 Must be traceable to NIST when available.

13.7 Initial Calibration Blank (ICB): (2% HNO_3) Analyzed immediately after the ICV. Acceptance limits are ± RL.

Continuing Calibration Verification (CCV)
In addition to the method requirements, the following CCV criteria also apply:

13.8 Must be analyzed every 10 samples and at the end of each analytical batch.
13.9 Continuing Calibration Blank (CCB): (2% HNO_3 Analyze immediately after the CCV. Acceptance limits are ± RL.
13.10 If the CCV results obtained are outside the acceptance criteria, corrective actions must be performed. If routine corrective actions fail to produce an acceptable second consecutive CCV, then sample analyses cannot continue until a new ICAL is established and verified with an ICV.
NOTE: For calibration verification purposes, the CCV/CCB is analyzed as a set.

However, sample data associated with an unacceptable CCV may be reported as qualified data under the following special conditions:

13.10.1 When the acceptance criteria for CCV are exceeded high, i.e., high bias, and there are associated samples that are non-detects, then those non-detects may be reported. Otherwise the samples affected by the unacceptable calibration verification must be reanalyzed after a new ICAL has been established, evaluated and accepted.

13.10.2 When the acceptance criteria for the CCV are exceeded low, i.e., low bias, those sample results may be reported if they exceed a maximum regulatory limit/decision level. Otherwise the samples affected by the unacceptable verification must be reanalyzed after a new ICAL is established and verified with an ICV.

13.10.3 When the acceptance criteria for the CCV are exceeded and it is not possible to reanalyze the sample due to limited sample quantity AND a new sample cannot be obtained by the laboratory, the data may be reported with the appropriate data qualifiers if the client has been contacted and agrees, in writing, to accept the qualified data.

13.11 Records: Initial and Continuing Calibration Records will contain, at a minimum, the following:

1. Calibration date
2. Test method
3. Instrument
4. Analysis date
5. Each analyte name
6. Analyst's initials or signature
7. Standard Concentration (appropriate units) and number of standards
8. Response (appropriate units)
9. Calibration curve or response factor
10. Statistics for ICAL curve fit in order to judge calibration curve acceptance
11. Acceptance Limits for ICV analysis in order to judge calibration curve acceptance
12. Acceptance Limits for CCV analysis in order to judge continuing calibration acceptance
13. Calibration Standards and Reagent Solutions ID's

Table 5 Calibration Requirements

QCI	Frequency	Standards	Control Limits	Corrective Action
ICAL	Daily or as needed	Minimum of two standards, see Table 2 for concentrations	r = 0.995	Correct problem then repeat initial calibration
ICV	After each new ICAL	25µg/L, 50 µg/L, 500 µg/L	± 10% of true value	Correct problem then repeat ICV or initial calibration
ICB	After each new ICV	Reagent Blank (2% HNO_3)	< RL	Correct problem then repeat ICB
CCV	Every 10 samples, and end of the batch	50 µg/L, 100 µg/L, 1000 µg/L	± 10% of true value	Correct problem then repeat CCV and associated samples, or repeat initial calibration
CCB	After each CCV	Reagent Blank (2% HNO_3)	< RL	Correct problem then repeat CCB and associated samples

Support Equipment
Autopipettes - Check autopipette to ensure standardization is within control limits (see SOP 1040 General Laboratory Practices for Pipette Calibration).

Dispensing Pipettes Check pipette to ensure standardization is within control limits (see SOP 1040 General Laboratory Practices for Pipette Calibration

14.0 PROCEDURE

14.1 Sample Preparation

14.1.1 Acid Digestion: Samples requiring digestion must be prepared by one of the following methods prior to ICP-MS analysis.

Matrix	SOPs
Water	3005
Soil/sediment/Waste	3110
TSP/PM10 filters	3115

14.1.2 Direct Analysis
For Dissolved Metals Analysis:
Filtering the Sample Through a 0.45 Micron Filter.
Wash the filter paper or filter disk with 5 mL of 2% nitric acid followed by 2-3 mL of sample before filtering the aliquot to be tested. Record this procedure in the comments section of the ICP-MS Preparations logbook. Take a 10 ml aliquot of the filtered sample and acidify with 0.2 mL of concentrated HNO_3. Filter a MB and LCS to be analyzed with the batch.

Also prepare a MS/MSD (if sample amount permits, otherwise prepare an LCS/LCSD), by spiking 10 mL of the filtered sample with 0.2 mL of LCS/MS stock (section 10.10) and analyze with the samples. Report results as dissolved metals.

For Drinking Water Analysis - Take a 10 ml aliquot of the sample and acidify with 0.4 mL of 1:1 HNO_3. Report results as total metals.

14.2 ICP-MS Analysis

Turn on the argon flow (100 psi minimum) from the Dewar. Turn on the water chiller. Connect all pump tubing. Double click ICP-MS Top icon. A message will appear "Is ISIS power on?" Turn it on if not already on. Click <yes>, <instrument>, <instrument control>, <plasma>, and <plasma on> to ignite the plasma and allow at least 30 minutes for warm up.

14.2.1 TUNING:
Click <ALS> in the instrument control screen, and <Go To>, to move the sipper probe to the tune solution. Put the internal standard tubing into reagent water. Close the Instrument Control Window. Open the tune screen by clicking <Instrument> and <Tune>. The tune window will open. Click <start> to monitor the counts per 0.1 seconds, and give a visual display of the RSD for counts for ^{7}Lithium, ^{89}Yttrium and ^{205}Thallium. The tune screen also displays the settings for

the Plasma Orientation, Gas Flows, Peripump RPMs, Lens settings, Q-Pole settings and Detector Parameters.

Tune the Agilent 7500 for sensitivity to ensure that the instrument produces the best results for the masses being analyzed. Achieve good sensitivity by running a recommended tuning solution of 10 parts per billion (ppb) of Li, Y, Ce and Tl. [ICP-MS Working Tuning Solution, 10.6]. If necessary adjust the tune parameters for maximum sensitivity, reducing Oxide Ions, and Doubly Charged Ions.

Operating conditions: Attachment 4 lists the affects of adjusting the parameters in the tune window on the tune of the instrument. Once you have adjusted the parameters satisfactorily, generate a Tune Report.

NOTE: A Tune Report MUST be generated prior to analyzing samples every day, whether the parameters have been changed or not.

TUNE SPECIFICATIONS:
Sensitivity:
Li > 5,000 cts/0.1sec @10 ppb concentration
Y > 10,000 cts/0.1 sec @ 10 ppb concentration
Tl > 5,000 cts/0.1sec @ 10ppb concentration

Precision:
Li < 15% RSD (0.1 sec integration time)
Y < 10% RSD (0.1 sec integration time)
Tl < 10% RSD (0.1 sec integration time)

Oxides: < 1.2 %

Double Charged: Ce ++/Ce+ < 5.0%

Background:
Li < 30 cps
Y <15 cps
Tl < 15 cps

Mass Resolution: W-10% 0.65 – 0.8 AMU

Mass Axis: nominal mass +/- 0.1 AMU for ^{7}Li, ^{89}Y and ^{205}Tl

After generating an acceptable tune report insert the sample tube for internal standards into the Internal Standard working solution and place the sipper probe for the sample line into 2% v/v HNO_3 rinse solution. Allow the system to rinse out the lines for at least five minutes.

14.2.2 SETTING P/A FACTORS:

ChemStation automatically switches between pulse and analog mode. For linear calibration curves, these two modes should be adjusted by using P/A Factor tuning.

The counts of each element must range from 400,000 to 4,000,000 cps to get accurate P/A Factors. The P/A factor adjustment must be performed everyday to get accurate results in a sample with a wide concentration range where both the pulse and analog mode are used.

Determine the P/A Factors by

1. Moving the sipper probe in the lowest concentration P/A solution.
2. After the solution has rinsed through into the plasma, click <tune> <adjust P/A factors>. 3. Click on <Load masses from acq. method> in the window that pops up.4. Click <run>. After about 20 seconds a message appears saying, "accept current P/A factors?" Check the clipboard window behind the message. Either a number (the P/A factor) or a message that states "sensitivity is too low" appears next to each mass. Click <yes> to accept the P/A factors and close out the clipboard window. If a message appears that states "sensitivity is too high" you can accept the P/A factor but will need to P/A with a lower concentration solution to get the P/A factor for the mass that gave "sensitivity too high."

Repeat steps 1, 2, and 4 for successively higher analyte concentrations until you have P/A factors for all masses of interest. Check the box "Merge in the current data" if not already checked. This will add in successive P/A factors without deleting the P/A factors for the masses, which have P/A factors already.

DO NOT REPEAT STEP 3 (click on <Load masses from acq. method> for each successive solution). This clears out all your P/A factors and should only be clicked on before you first start to P/A.

14.2.3 Load the appropriate method. (IO35.M for ambient airs samples, or 6020G.M for all other analyses.

14.2.4 TUNE CHECK:

Prior to calibration and analysis the tune conditions must be verified by analyzing a Tune Check Solution at least five times with relative standard deviations of < 5% for the analytes contained in the tuning solution.

Conduct mass calibration and resolution checks in the mass regions of interest. The mass calibration and resolution parameters are required criteria, which must be met prior to any samples being analyzed. If the mass calibration differs more than 0.1 amu from the true value, then the mass calibration must be adjusted to the correct value. The resolution must also be verified to be less than 0.9 amu full-width at 10 percent peak height.

14.2.4.1 After tuning and P/A adjustments go to ICPMS top and click on <sequence>, <edit>, in the dropdown box on the left select TUNE, CCV, CALIB, or ICS, to edit the comment section in each of these screens. Enter any new solution preparation numbers for standards, ICV, CCV, ICB, ICS A, etc. in the comment column. Click <OK> at the bottom to save changes.

14.2.4.2 Click on <sequence>, <edit> again and select "SMPL" from the dropdown box to open up the sample sequence table. Edit inserting information under the column headings, VIAL (vial position), METHOD, SAMPLE (sample ID), COMMENT (sample test code), and Dil/Lv (dilution factor) for all samples to be analyzed. Click <print> to print out the list to refer to when placing the sample tubes in the racks and checking the order for correctness before starting analysis. Then click <save> to save the sample table. Samples are analyzed in order as they appear in the sample table.

14.2.4.3 Uncap and place all standards, tune check, and check standards in their proper places in rack #1. Racks #2-4 are for sample tubes.

14.2.4.4 Start the calibration and running of samples by clicking <sequence>, <run>. "Full Method'" and "Overwrite Existing Data Files," should be checked. Enter the instrument ID and your initials in the box for operator name and click <run sequence>. The software will run a blank, tune check, then the calibration followed by samples. After all samples have run the software will analyze a final ICS A, ICS AB, blank, CCV, and CCB. The plasma will then shut off and the ISIS program will stop. If additional samples will be analyzed later it will be necessary to insert blanks into the sample table to keep the instrument running.

14.2.4.5 Verify the Tune Check when complete. RSDs for Li, Co, In, and Tl must be < 5% and the mass calibration for each mass must be within 0.1 AMU of the mass number and <0.9 AMU at 10% peak height. If not abort the run and restart to rerun the Tune Check.

14.2.5 Initial Calibration and Quality Control Checks

14.2.5.1 Check each standard to determine if all internal standard cps are within 20% of the calibration blank's cps. If not abort the run and restart.

14.2.5.2 Check the ICV and ICB to determine if masses of interest are within tolerance. If they are continue with sample analysis. Rinse time before and after the samples are programmed into the method as well as analysis of CCV and CCB after every ten samples.

14.2.5.3 If an internal standard fails for any mass in a sample the system will run a blank before proceeding with analysis.

14.2.5.4 Perform all qualitative and quantitative measurements as described in Sections 14.4 and 14.5. After analysis, store the digests at room temperature.

14.2.6 The analytical sequence for Initial Calibration is:
(Tune Check)
Blank
Calibration Blank
Calibration standard (S1)
Calibration standard (S2)
Calibration standard (S3)
Calibration standard (S4)
Blank
Initial Calibration Verification Standard (ICV)

Initial Calibration Blank (ICB)
Interference Check Solution A (ICS A)
Interference Check Solution AB (ICS AB)
Blank

A typical analytical sequence for Sample Analysis is:
Method Blank (MB)
LCS
(LCS Duplicate optional)
Sample #1
Sample #1 Matrix Spike (MS)
Sample #1 Matrix Spike Duplicate (MSD)
Samples #2, #3, etc. up to 10 analytical samples
CCV
CCB
10 analytical samples (which may include, MB, LCS, MS, MSD, samples)
CCV
CCB
….
ICS A
ICS AB
blank
CCV
CCB

14.3 Data Interpretation - Qualitative Analysis

To obtain analyte data of known quality, it is necessary to measure more than the analytes of interest in order to apply corrections or to determine whether interference corrections are necessary. If the concentrations of interference sources (such as C, Cl, Mo, Zr, W) are such that, at the correction factor, the analyte is less than the limit of quantification and the concentration of interferents are insignificant, then the data may go uncorrected. Note that monitoring the interference sources does not necessarily require monitoring the interferent itself, but that a molecular species may be monitored to indicate the presence of the interferent. When correction equations are used, all QC criteria must also be met. Extensive QC for interference corrections are required at all times. The monitored masses must include those elements whose hydrogen, oxygen, hydroxyl, chlorine, nitrogen, carbon and sulfur molecular ions could impact the analytes of interest. Unsuspected interferences may be detected by adding pure major matrix components to a sample to observe any impact on the analyte signals. When an interference source is present, the sample elements impacted must be flagged to indicate (a) the percentage interference correction applied to the data or (b) an uncorrected interference by virtue of the elemental equation used for quantitation. The isotope proportions for an element or molecular-ion cluster provide information useful for quality assurance.

NOTE: Only isobaric elemental, molecular, and doubly charged interference corrections that use the observed isotopic-response ratios or parent-to-oxide ratios are acceptable corrections for use in this method.

14.4 Data Interpretation - Quantitative Analysis

Calculations including appropriate interference corrections, internal-standard normalization, and the summation of signals at 206, 207, and 208 m/z for lead (to compensate for any differences in the abundances of these isotopes between samples and standards), are performed automatically by the instrument during analysis.

14.5 Records

Record the following information in the appropriate logbook or data file. Include any deviations from this procedure. Analyst initials, date of analysis, sample number or ID, initial sample volume or weight processed, calibration standard, sample, or solution identifier, QC sample or solution identifier, internal standard solution identifier, any dilution information, readings from support equipment, data file name, instrument method name, visual observations, and any other information as deemed necessary.

14.6 Troubleshooting

The sample line tubing and internal standard tubing should be checked for even flow when the instrument is first started by observing and air bubble passing through the line. Adjust the tension on the tubing so that it is just tight enough to allow the air to evenly move through the tubing without any pulsing.

Check for leaks and air bubbles at tubing connections, tee connectors and fittings. The majority of problems you encounter occur somewhere along the sample introduction path.

Ensure that the argon Dewar has enough argon to maintain a pressure of 100 psi throughout the run.

14.7 Routine Maintenance

Record all maintenance in the instrument logbook. For non-routine maintenance record the problem, what was done to correct it and whether the correction solved the problem.

14.7.1 Daily, or as needed according to sample throughput, examine the tubing
14.7.2 Clean the sample and skimmer cones on an as needed basis (loss of sensitivity).
14.7.3 Inspect the pump tubing for wear and replace as necessary. Check the Argon gas supply; replace as necessary.

14.8 Calibration of the Polypropylene Volumetric Flasks

(Yearly, independently check flask volume with reagent water using a balance to monitor weight of water volume: tolerance is stated volume ± 0.1%). Perform this check every year.

14.8.1 Initially check the volume of each flask. Using an analytical balance, record the weight of the empty and dry flask.
14.8.2 Add room temperature de-ionized reagent water.
14.8.3 Fill to mark and re-weigh.
14.8.4 Subtract initial weight from final weight.
14.8.5 Divide the result by the volume of the flask and multiply by 100.
14.8.6 The percent recovery should be ±0.1%.
14.8.7 Record this information and label the flask for reference.

15.0 DATA REDUCTIONS, CALCULATIONS, AND LOADING

15.1 The data system prepares a calibration curve by plotting response versus standard concentration. Sample concentration is calculated from the regression equation.

NOTE: The LIMS program will convert µg/L to the appropriate reporting units.

15.2 Report only those values that fall between the lowest calibration standard and the linear range of the instrument. Samples exceeding the linear range must be diluted and reanalyzed.

15.3 For sample results greater than the linear range, dilute the sample in a 15 mL centrifuge tube using 2% HNO_3. Pipette in the appropriate volume of sample into the tube and dilute to volume with 2% HNO_3. Dilution Factor = (10 mL/ digestate volume analyzed in mL). Use the dilution factor and calculate the concentration in the digestate as follows:

Concentration in mg/L = readout * 0.001 (10 mL/ digestate volume analyzed in mL)

15.4 Air Samples: calculate the concentration as follows:

Conc. in µg/m^3 = readout in µg/L * (10 mL/ initial sample air volume in m^3) * 1 L/1000 mL

NOTE: 1m^3 = 1000 Liters

15.5 TSP/ PM10 Ambient Air Samples

15.5.1 Each filter should have an associated volume of air sampled, average temperature and pressure. This value is corrected to the EPA standard volume using the equation listed below.

$$V_{std} = V_{avg}(P_{avg}/760\text{mm Hg})(298K/T_{avg})$$

Where:
V_{avg} is the calculated average flow rate during the elapsed sampling time (field data)
P_{avg} is the average barometric pressure in mm Hg during the sample run (field data)
T_{avg} is the average temperature in K during the sample run (field data)

15.5.2 Metals concentration in the air samples can then be calculated as follows:

$$C = [(\mu g \text{ metal/L}) \times (\text{Digestion volume, L/strip})(9) - F_m]/V_{std}$$

where:
C = concentration, µg metal/m3.
µg metal/L =determined metal concentration determined
final extract volume (L)/strip = total sample extraction volume from extraction procedure
9 = Useable filter area, [20 cm x 23 cm (8" x 9")]
Exposed area of one strip, [2.5 cm x 20 cm (1" x 8")].
F_m = average concentration of blank filters, µg.

V_{std} = standard air volume pulled through filter, std. m^3 (@25°C and 760 mm Hg).

15.5.3 When corrected average volume, average pressure and average temperature are NOT provided for a given filter, calculate µg metal/filter using the following equation

µg metal/ filter =[(µg metal/L) x (Digestion volume, L/strip)(9) - F_m]

15.5.4 Reported values should be blank subtracted for filters that STAT Analysis supplies to the client.

15.6 Wipe Samples: calculate the concentration as follows:

Conc. in µg/ft^2 = readout in µg/L * (50 mL/ initial wipe area in ft^2) * 1 L/1000 mL

NOTE: 1 ft^2 = 144 in^2 = 12 in * 12 in

15.7 Aqueous Samples: The concentration readout for aqueous sample digestates is µg/L. It does not need further data reduction unless the initial sample volume was less than 50 mL. If less than 50 mL sample was digested, calculate the concentration as follows:

Concentration in mg /L = readout *0.001 *(50mL/ initial sample volume digested in mL)

15.8 Soil Samples: The concentration readout for soil samples must be multiplied by the following factor: Factor = (50 / sample weight in g). Calculate the concentration in soil samples as follows:

Conc. in mg/Kg = readout * 0.001 (50 mL/ sample weight in g) * 1 L/1000 mL * 1000 g /1 Kg

15.9 Soil samples reported on a dry weight basis: The concentration is divided by the decimal equivalent of the percent residue of the soil after oven drying at 105 °C.

15.10 Report results in the appropriate units.

15.11 The procedure for uploading data into the LIMS system is detailed in SOP 1400 LIMS.

16.0 METHOD PERFORMANCE

Demonstration of Capability (DOC)
All parameters of interest must meet the method acceptance criteria before actual sample analysis begins. See SOP 1230 Training for the procedure to perform and document the DOC. The DOCs for the analysts performing this method are located in the analysts' training form folders located in the QA office files.

A QC reference concentrate is required containing each analyte at a concentration of either 10 or 100 mg/L. The QC reference sample used is a ten-fold dilution of the CCV solution. The QC

reference sample is made using stock standards prepared independently from those used for calibration.

For each analyte calculate the mean recovery (X) and standard deviation (s) and the average % Recovery (%R). Compare X and s and %R with the corresponding acceptance criteria for accuracy and precision, respectively. X must be within 9/90 and 11/110 µg/L, respectively, and s must be less than 1.0/10.0 µg/L, respectively, and %R must be within 100 ± 10%.

These limits are taken from established in-house criteria. If X and s and %R for all analytes meet the acceptance criteria, the system performance is acceptable and analysis of actual samples can begin. If any individual X or %R falls outside the range for accuracy or any individual s exceeds the precision limit, then the system performance is unacceptable for that analyte and corrective action must be taken.

Comparison to Reference Method Data:
EPA Method 6020 Table 4, aqueous samples, provides guidance for the establishment of control limits for the LCS samples.

EPA Method 6020 Table 5, solid samples, provides guidance for the establishment of control limits for the LCS samples.

EPA Method IO-3.5, Table 7, solid samples, provides guidance for the establishment of control limits for the LCS samples.

In-House Control Limits: Method performance data is on file in the laboratory QC department. Comparison of method performance data for the laboratory to the reference method criteria occurs when laboratory in-house acceptance limits are generated. In-house generated data is compared to the specifications of the reference method. If the in-house limits are within the specifications of the reference method, the control limits are updated in LIMS. If the in-house limits are not within specifications, an investigation is performed to determine the cause(s) of the problem and a corrective action is completed. The analysis may continue until enough data points are collected to regenerate new control limits. Any QC data generated outside of reference method limits during that time frame is flagged.

The laboratory maintains performance records to document the quality of data that is generated. Method accuracy for samples is assessed and records maintained.

Control limits for the method parameters are generated by the QC staff and distributed to the analysts via updates to the LIMS control charts. The control limits are calculated based on in-house performance data. At a minimum, these limits are reviewed annually.

17.0 POLLUTION PREVENTION

The preparation of excessive volumes of laboratory reagents and standards shall be avoided so that waste and potential for pollution are minimized. Samples, reagents and standards shall be disposed in compliance with the lab waste disposal program, SOP 1130 Waste Disposal. With the consent of the client, the samples may be returned to their origin for treatment.

Uncontaminated paper waste, glass and cans should be separated for recycling. Laboratory staff is required to protect the laboratory and our clients' business information when disposing of recycled paper or waste from the facility.

18.0 DATA ASSESSMENT AND CRITERIA FOR QUALITY CONTROL MEASURES

Data assessment includes review of: proper sample condition, preservation, and storage; analysis within holding time limitations; deviations from the SOP, evaluation of performance based on in-house control limits, reference method limits or project specific limits.

The laboratory must maintain records to document the quality of data that is generated. Ongoing data quality checks are compared with established performance criteria to determine if the results of analyses meet the performance characteristics of the method. When results of sample spikes indicate atypical method performance, a calibration verification standard is used to confirm the measurements were performed in an in-control mode of operation. The data review is conducted according to SOP 1250 Data Review.

18.1 Blanks

If the Method Blank, ICB or CCB exceeds the RL the source of contamination must be investigated and corrective actions taken. The analyte concentrations in the method blank of a digestion batch must be less than the RLs listed in Attachment 1. If these criteria are exceeded, re-analyze the method blank. If after re-analysis, the blank criteria are still exceeded, then the entire digestion batch must be re-digested or qualified. Always refer to a client specific QAPP for additional guidance.

Affected samples must be reprocessed and reanalyzed or Data must be appropriately qualified if:

1) The concentration of a targeted analyte in the blank is at or above the reporting limit as established by the SOP or by regulation, AND is greater than 1/10 of the amount measured in any sample.
2) The blank contamination otherwise affects the sample results as per the test method requirements or the individual project data quality objectives.

18.2 Laboratory Control Samples (LCS)

The results of the individual batch LCS are calculated in percent recovery (%R). Results are compared to established acceptance criteria: 100 ± 20% for all samples. If the LCS is outside the acceptance criteria the analytical system is "out-of-control." Any affected samples associated with an out of control LCS must be reprocessed and reanalyzed or the results reported with appropriate data qualifiers. If after re-analysis the control criteria have not been met, the entire digestion batch must be redigested for the out of control analytes of interest. Always refer to a client specific QAPP for additional guidance.

18.3 Duplicates

The results from laboratory duplicates are designed to assess the precision of analytical results in a given matrix and are expressed as relative percent difference (RPD). See the STAT QAM, Section 5.4 for the calculation for RPD. Results are compared to established

acceptance criteria as listed in the MS/MSD. For duplicates results outside established criteria corrective action must be documented or the data reported with appropriate data qualifying codes.

For this test method, the analysis of the MS/MSD pair is used for determination of method precision. Duplicate LCS samples will be analyzed for all matrices where it would be impractical to perform a MS/MSD, such as wipe samples. Precision limits of 20% will be used for RPD acceptance criteria for MS/MSD and LCS/LCSD.

18.4 Matrix Spikes

The results from MS/MSD are primarily designed to assess the precision and accuracy of analytical results in a given matrix and are expressed as percent recovery (%R) and relative percent difference (RPD). See the STAT QAM, Section 5.4 for the calculation for RPD. Results are compared to established acceptance criteria: 100 ± 25%R and 20% RPD for all samples. For matrix spike results outside established criteria corrective action must be documented or the data reported with appropriate data qualifying codes. The RPD control limits are for analyte values greater than 100 times the instrumental detection limit. If this limit is exceeded, the reason for the out-of-control situation must be found and corrected.

NOTE: The %R limits will not apply to samples with analyte concentrations that are greater than four times the spike level.

Post Digestion Spike (PDS): This test may be applied for new or unusual matrices. An analyte spike added to a portion of a prepared sample, or its dilution, should be recovered to within 75 to 125 %R of the known value or within the laboratory derived acceptance criteria. The spike addition should be based on the indigenous concentration of each element of interest in the sample. If the spike is not recovered within the specified limits, the sample must be diluted and reanalyzed to compensate for the matrix effect. Results must agree to within 10% of the original determination. The use of a standard-addition analysis procedure may also be used to compensate for this effect.

18.5 Internal Standards

The results of the individual Internal Standard compounds on all samples, blanks, and spikes are calculated in percent recovery (%R) and are compared to established acceptance criteria. For instrument method 6020G.M, if the Internal Standard recovery in the test sample is outside the acceptance criteria, 30 to 120% of the response of the applicable internal standard in the ICAL Blank, corrective action must be taken. For ambient air samples, instrument method IO35.M, this limit is 60-125 %R. A dilution test (1+4) may be performed to minimize the matrix effect. Report the results from the diluted sample if internal standard recovery is acceptable.

NOTE: If the Internal Standard recovery in the calibration standards, ICV, ICB, CCV, or CCB is outside the acceptance criteria, 80 to 120% of the response of the applicable internal standard in the ICAL Blank, corrective action must be taken and affected samples must be reanalyzed.

18.6 Dilution Test

If the analyte concentration is within the linear dynamic range of the instrument and sufficiently high (minimally, a factor of at least 100 times greater than the concentration in the reagent blank, an analysis of a fivefold (1+4) dilution must agree within 10% of the original determination. If not, an interference effect must be suspected. One dilution test may be included for each twenty samples (or less) in a batch.

18.7 ICS

Verify the magnitude of elemental and molecular-ion isobaric interferences and the adequacy of any corrections at the beginning of an analytical run and once every 12 hours for instrument method 6020G.M. For ambient air sample, instrument method IO35.M, the ICS pair is analyzed at the beginning of the analytical run and once every eight hours. The ICS pair is analyzed at the end of the run as well for both methods. Do this by analyzing the interference check solutions A and AB. The analyst should be aware that precipitation from solution AB may occur with some elements, specifically silver. The recovery of each element in the ICS solution should be 100 ± 20%.

18.8 Instrument Detection Limits

IDLs in µg/L can be estimated by calculating the average of the standard deviations of the three runs on three non-consecutive days from the analysis of a reagent blank solution with seven consecutive measurements per day. Each measurement must be performed as though it were a separate analytical sample (i.e., each measurement must be followed by a rinse and/or any other procedure normally performed between the analysis of separate samples). IDLs must be determined at least every three months and kept on file.

19.0 CORRECTIVE ACTIONS FOR OUT-OF-CONTROL DATA

The process for handling unacceptable and out of control data is found in SOP 230 Corrective Action.

If the ICV, ICB, CCV, CCB, MB, LCS/LCSD, MS/MSD, PDS, lab duplicate, or internal standard recovery of any parameter falls outside the designated acceptance range, the laboratory performance for that parameter is judged to be out of control, and the problem must be immediately identified and corrective action taken. The analytical result for that parameter in the samples is suspect and is only reported for regulatory compliance purposes with the appropriate corrective action. Immediate corrective action includes reanalyzing all affected samples by using any retained sample before the expiration of the holding time. Final data results must be qualified in the client report for reported results not meeting the laboratory-defined criteria.

1) Review standards preparation logbooks. Check all calculations and ensure dilution factors are properly recorded.
2) Re-prepare the suspected standard or QC sample to identify possible preparation errors of the standard or QC sample.
3) Re-Analyze the samples when the CCV or LCS is not within acceptable limits.
4) Perform routine preventative maintenance following manufacturer's specification. Record all maintenance in the instrument logbook.

20.0 CONTINGENCIES FOR HANDLING OUT-OF-CONTROL OR UNACCEPTABLE DATA

Every effort is made to prevent problems from occurring. When out of control or unacceptable data occurs the first option is to identify the problem and reanalyze the samples within the holding times. When this is not possible, the QA Manager and/or the Laboratory Director will review data and discuss options with the client. Reanalysis or reporting the data with qualification are alternatives. Out of control or unacceptable data reported to the client must include the data qualifier, flag and discussion on the rationale for reporting.
Holding time exceedence, improper preservation and improper sample condition or storage are noted on the corrective action form and included on the final report.
Review the CCV standard response, LCS result, ICS results, and internal standard recovery for acceptable performance for each batch of samples. Record any trends or unusual performance on a corrective action form. Final data results must be qualified in the client report for results not meeting the laboratory-defined criteria.

20.1 The process for handling unacceptable and out of control data is found in the Laboratory QAM Section 11. The reporting of data that is out of control must be approved and documented by Quality Assurance Manager and either the Technical Manager or the Laboratory Director.

20.2 Client Requested Modifications:

- 20.2.1 Clients must request modifications from the laboratory SOP in writing to the lab.
- 20.2.2 The lab director, technical manager and quality assurance manager will evaluate the requested client deviations, determine the feasibly of the deviation and the potential effects on the data.
- 20.2.3 If it is determined that the lab will perform the requested deviations, lab director, technical manager and quality assurance manager will decide if a method validation study is required.
- 20.2.4 The designated project manager will retain all documentation concerning the requested deviation, including all correspondence with the client, in the client folder.
- 20.2.5 The final analytical report must include the statement “This report has analyses performed using client requested modifications.”

21.0 WASTE MANAGEMENT

The STAT Analysis Corporation Waste Disposal SOP 1130 identifies proper waste management practices for the chemicals and biological materials used in this procedure. Samples are stored and discarded accordance with SOP 1130 Waste Disposal.

22.0 REFERENCES

22.1 Method 6020, Revision 0, December 1996; U.S. EPA SW-846 “Test Methods for Evaluating Solid Waste, Physical/Chemical Methods” Update III, December 1996

22.2 Compendium Method IO-3.5 Compendium of Methods for the Determination of Inorganic Compounds in Ambient Air: Determination of Metals in Ambient Particulate Matter Using Inductively Coupled Plasma/ Mass Spectrometry (ICP/MS), U.S. EPA, June 1999.

22.3 STAT Analysis Corporation Quality Assurance Manual
22.4 STAT SAP 003 Chemical Hygiene Plan
22.5 STAT SOP 230 Corrective Actions
22.6 STAT SOP 1000 Control and Use of Laboratory Notebooks
22.7 STAT SOP 1010 Standard and Reagent Preparation
22.8 STAT SOP 1040 General Laboratory Procedures
22.9 STAT SOP 1130 Waste Disposal
22.10 STAT SOP 1210 Method Detection Limits (MDLs)
22.11 STAT SOP 1230 Training
22.12 STAT SOP 1250 Data Review
22.13 STAT SOP 1400 LIMS
22.14 STAT SOP 3005 SW846 3005A Acid Digestion of Waters for Total Recoverable or Dissolved Metals for Analysis by FLAA, ICP, or ICP-MS
22.15 STAT SOP 3110 SW846 3050B Acid Digestion of Sediments, Sludges, and Soils for Metals Analysis by FLAA, ICP, or ICP-MS
22.16 STAT SOP 3115 Acid Digestion of High Volume Filters
22.17 Manufacturers' Equipment Instruction Manuals

23.0 FORMS, FIGURES, TABLES, DIAGRAMS, FLOWCHARTS, ATTACHMENTS OR VALIDATION DATA

Attachment 1: MDLs and Reporting Limits
Attachment 2: Concentrations of ICS Solutions
Attachment 3: Concentrations of Spike Solutions
Attachment 4: Tune adjustment Parameters

ATTACHMENT 1: MDLs and REPORTING LIMITS FOR ELEMENTS

				Aqueous		Soil		Air	
CAS #	**Element**	**Mass (Isotope) *, ****	**IDL (mg/L)**	**MDL (mg/L)**	**RL (mg/L)**	**MDL (mg/Kg)**	**RL (mg/Kg)**	**MDL (µg/ filter)**	**RL (µg/ filter)**
7429-90-5	Aluminum	27	0.235	0.00309	0.02	0.3271	2	NA	NA
7440-36-0	Antimony	**121***, 123	0.606	0.00249	0.003	0.1099	0.2	0.75	5
7440-38-2	Arsenic	75	0.063	0.00097	0.002	0.0429	0.1	0.69	5
7440-39-3	Barium	135, **137***	0.007	0.00140	0.002	0.0260	0.1	27	200
7440-41-7	Beryllium	9	0.004	0.00027	0.001	0.0074	0.05	0.25	5
7440-43-9	Cadmium	**111***, 114	0.015	0.00021	0.001	0.0078	0.05	0.20	5
7440-47-3	Chromium	**52*,** 53	0.027	0.00054	0.002	0.0260	0.1	1.4	10
7440-48-4	Cobalt	59	0.019	0.00011	0.002	0.0051	0.1	0.18	5
7440-50-8	Copper	**63***, 65	0.080	0.00158	0.005	0.0404	0.25	0.52	5
7439-92-1	Lead	**206,207, 208****	0.019	0.00059	0.001	0.0065	0.05	0.40	5
7439-96-5	Manganese	55	0.020	0.00029	0.002	0.0114	0.1	0.82	10
7440-02-0	Nickel	**60***, 62	0.186	0.00107	0.002	0.0434	0.1	0.54	10
7782-49-2	Selenium	82	0.210	0.00172	0.002	0.0646	0.1	0.44	5
7440-22-4	Silver	**107***, 109	0.050	0.00079	0.002	0.0278	0.1	0.071	5
7440-28-0	Thallium	205, **203***	0.096	0.00026	0.002	0.0080	0.1	0.17	5
7440-32-6	Titanium	46, 47*		0.00057	0.005	.0261	0.25	1.1	10
7440-66-6	Zinc	**66***, 67, 68	0.080	0.00160	0.01	0.1157	0.5	2.2	25
7440-23-5	Sodium	23	0.671	0.07706	0.15	1.0965	6	NA	NA
7439-95-4	Magnesium	**24***, 25	0.193	0.00832	0.05	0.4429	3	NA	NA
7440-09-7	Potassium	39	0.585	0.03922	0.05	0.7043	3	NA	NA
7440-70-2	Calcium	44	2.698	0.07448	0.10	6.3708	6	NA	NA
7440-62-2	Vanadium	51	0.009	0.00087	0.002	0.0959	0.1	0.52	5
7439-89-6	Iron	**57***, (54)	0.611	0.01154	0.05	0.6888	3	4.6	50
7439-98-7	Molybdenum	92,94,96,97, **98***	0.020	0.00033	0.005	0.0405	0.5	0.37	5
7440-31-5	Tin	**120***, 118	0.026	0.00054	0.01	0.0772	0.5	0.24	5
7440-42-8	Boron	**11***, 10	.332	0.00551	0.02	0.2322	1	NA	NA

NOTES:

* Primary mass used for quantitation. Other masses are optionally used if proper instrument QC is available.

** The summation of all three lead masses is used for quantitation.

NA = not applicable

ATTACHMENT 2: CONCENTRATIONS of ICS SOLUTIONS

Solution A: Concentration in mg/L

Element	Stock	Working
Al	500	100
C	1000	200
Ca	500	100
Cl	3600	720
Fe	500	100
K	500	100
Mg	500	100
Mo	10	2
Na	500	100
P	500	100
S	500	100
Ti	10	2

Solution AB: Concentration in mg/L

Element	Stock	Working		Element	Stock	Working
Al	500	100		Ag	0.100	0.020
C	1000	200		As	0.100	0.020
Ca	500	100		Cd	0.050	0.010
Cl	3600	720		Co	0.200	0.040
Fe	500	100		Cr	0.100	0.020
K	500	100		Cu	0.100	0.020
Mg	500	100		Mn	0.100	0.020
Mo	10	2		Ni	0.200	0.040
Na	500	100		Se	0.100	0.020
P	500	100		V	0.200	0.040
S	500	100		Zn	0.100	0.020
Ti	10	2				

ATTACHMENT 3: CONCENTRATIONS OF LCS/MS SPIKING SOLUTION

Element	Concentration (mg/L)
Aluminum	25
Antimony	12.5
Arsenic	25
Barium	25
Beryllium	25
Boron	25
Cadmium	25
Chromium	25
Cobalt	25
Copper	25
Lead	25
Manganese	25
Molybdenum	12.5
Nickel	25
Selenium	25
Silver	10
Thallium	25
Titanium	12.5
Tin	12.5
Vanadium	25
Zinc	25
Calcium	100
Iron	100
Magnesium	100
Potassium	100
Sodium	100

ATTACHMENT 4: Tune Adjustment Parameters

Plasma conditions:
Higher RF Power generally increases the sensitivity.

Sample Depth
Shortening sample depth increases sensitivity and raises oxide levels.

To reduce Oxide Ions <1.2%

- Increase the sampling depth
- Decrease the carrier gas flow
- Increase the RF power
- Decrease the sample flow rate

To Reduce the Doubly Charged Ions < 5%

- Increase the sampling depth
- Decrease the carrier gas flow
- Increase the RF power
- Decrease the sample flow rate

Resolution and Mass Axis
Peak width at 10 % should be 0.65 – 0.8 AMU
Mass Axis should be within +/- 0.1 AMU of the selected mass

AMU Gain - Adjusts the peak width. The higher the value the narrower the peak width for heaver masses

AMU Offset - Adjusts the peak width. The higher the value the narrower the peak width for ALL masses

Axis Gain - Adjusts mass calibration. Higher value shifts the peak of heavier masses towards higher mass

Axis Offset - Adjusts mass calibration. Higher value shifts the peak of ALL masses towards higher mass

QP Bias - Controls the speed of ions as they pass through the Q-Pole.

STAT Analysis Corporation

Standard Operating Procedure 4530:

Mercury In Water, Solid Or Semisolid Water (Manual Digestion/Automated Analysis Cold-Vapor Technique)
(EPA METHODS 7470A & 7471A)

Revision 03
Effective Date: January 9, 2003

Authors: **Dennis Jachim**

Printed Name	Signature/Date
Dennis Jachim **Technical Manager**	_____
Ian H. Graske **QA/QC Manager**	_____
Thomas M. Bauer **Laboratory Director**	_____
Bruce Anderson **Inorganics Manager**	_____

This Standard Operating Procedure has been prepared for the sole use of STAT Analysis Corporation.

Copy Number: _____

Table of Contents

1. Identification of Test Methods	3
2. Applicable Matrix or Matrices	3
3. Detection Limits	3
4. Scope and Application	3
5. Summary of Test Method	3
6. Definitions	4
7. Interferences	4
8. Safety	4
9. Equipment and Supplies	5
10. Reagents and Standards	5
11. Sample Collection, Preservation, Shipment and Storage	8
12. Quality Control	9
13. Calibration and Standardization	10
14. Procedure	13
15. Data Reduction, Calculations and Loading	15
16. Method Performance	15
17. Pollution Prevention	17
18. Data Assessment and Criteria for Quality Control Measures	17
19. Corrective Actions for Out-Of-Control Data	18
20. Contingencies for Handling Out-Of-Control Or Unacceptable Data	19
21. Waste Management	19
22. References	20
23. Forms, Figures, Tables, Diagrams, Flowcharts, Attachments or Validation Data	20

1.0 Identification of Test Method

Mercury In Water, Solid Or Semisolid Water (Manual Digestion/Automated Analysis Cold-Vapor Technique) - EPA METHODS 7470A & 7471A

2.0 Applicable Matrix or Matrices

This method is applicable to the following matrices: non-potable water, solid and chemical waste.

3.0 Detection Limits

The lab follows the procedure found in 40CFR Part 136B to determine the MDL for each matrix type on an annual basis. See the STAT Analysis SOP 1210 for the MDL Procedure, frequency and acceptance criteria. The MDLs measured by the laboratory and all supporting documentation are in the laboratory QA files for review.

The laboratory determined MDL must always be less than the reporting limit (RL). The RLs will usually range from three to ten times the laboratory measured MDLs, but this relationship may vary dependent on dilution of sample aliquots, matrix interferences, moisture adjustments (in solid samples), or method specific requirements.

The reporting limits for this method is 0.00025 mg/L for waters and 0.025 mg/kg for soils. The method detection limits for these methods are 0.000015 mg/L for waters and 0.0022 mg/kg for soils. Reporting limits are based upon the lowest calibration standard

4.0 Scope and Application

This method is a cold-vapor atomic absorption procedure for determining the concentration of mercury in mobility-procedure extracts, aqueous wastes, and ground waters (EPA Method 7470A) as well as measuring total mercury (organic and inorganic) in soils, sediments, bottom deposits, and sludge-type materials (EPA Method 7471A). All samples must be subjected to an appropriate dissolution step prior to analysis. If this dissolution procedure is not sufficient to dissolve a specific matrix type or sample, then this method is not applicable for that matrix.

NOTE: Each analyst must demonstrate the ability to generate acceptable results with this method.

5.0 Summary of Test Method

5.1 Prior to analysis, the liquid samples and the solid or semi-solid samples must be prepared according to the procedures discussed in this method.

5.2 The cold-vapor absorption method is based on the absorption of radiation at the 253.7-nm wavelength by mercury vapor. The mercury is reduced to the elemental state and aerated from solution in a closed system. The mercury vapor passes through a cell positioned in the light path

of an atomic absorption spectrophotometer. Absorbance (peak height) is measured as a function of mercury concentration.

5.3 **Method modifications from Reference** - This procedure utilizes an automated cold-vapor technique, mixing stannous chloride with an aliquot of the sample digestion at the instrument. Digestions take place in graduated 50-ml tubes.

6.0 Definitions

The STAT Analysis Corporation Quality Assurance Manual (QAM) contains the definitions of standard terms used in this SOP.

7.0 Interferences

7.1 Potassium permanganate is added to eliminate possible interference from sulfide. Concentrations as high as 20 ppm of sulfide as sodium sulfide do not interfere with the recovery of added inorganic mercury from reagent water.

7.2 Copper has also been reported to interfere; however, copper concentrations as high as 10 ppm had no effect on recovery of mercury from spiked samples.

7.3 For liquid analysis: seawaters, brines, and industrial effluents high in chlorides require additional permanganate (as much as 25 mL) because, during the oxidation step, chlorides are converted to free chlorine, which also absorbs radiation of 253 nm. Care must therefore be taken to ensure that free chlorine is absent before the mercury is reduced and swept into the cell. This may be accomplished by using an excess of hydroxylamine hydrochloride reagent. Both inorganic and organic mercury spikes have been quantitatively recovered from seawater by using this technique.

7.4 For solid analysis: samples high in chlorides require additional permanganate (as much as 25 mL) because, during the oxidations step, chlorides are converted to free chlorine, which also absorbs radiation of 253 nm. Care must therefore be taken to ensure that free chlorine is absent before the mercury is reduced and swept into the cell. This may be accomplished by using an excess of hydroxylamine sulfate reagent (25 mL). In addition, the dead air space in the digestion vessel must be purged before adding stannous chloride.

7.5 Certain volatile organic materials that absorb at this wavelength may also cause interference. A preliminary run without reagents should determine if this type of interference is present.

8.0 Safety

8.1 General laboratory protection (safety glasses, lab coat, disposal latex/nitrile gloves) should be worn at all times when handling samples or reagents.

8.2 The digestion, and all reagent additions, must be performed in a fume hood.

8.3 The potential health hazards from the samples cannot be determined. Therefore, exposure to the samples should be minimized to the extent possible. Other safety precautions must be conducted in accordance with the Chemical Hygiene Plan. Other actions can also be applied if deemed necessary.

8.4 A reference file of material safety data sheets (MSDS) is available in each room for personnel involved in an analysis using chemicals.

9.0 Equipment and Supplies

The following apparatus is recommended for performing this procedure. Equivalent items can be used, if with their use, the analytical and QA/QC requirements in this SOP can be met.

9.1 Cetac M-6000A Mercury Analyzer with ASX-500 autosampler. This instrument utilizes cold vapor atomic absorption to measure mercury concentration. Manufacturer recommended settings are used during operation.

9.2 Water Bath or Hot plate – adjustable and capable of maintaining a temperature of 90-95°C.

9.3 Analytical balance, capable of measuring 0.001 g.

9.4 Argon gas supply: high-purity grade (99.99%).

9.5 Graduated 50 mL centrifuge tubes, with screw caps

9.6 Thermometer capable of measuring 90-100 °C with suitable precision and accuracy.

9.7 Disposable tubes, approximately 14 mL

9.8 Autopipettor: 0.010 to 0.10 mL, 0.10 to 1.0 mL, 1.0 to 5.0 mL

9.9 Dispensing pipets: 1-5 mL, 1-10 mL, 1-20 mL

10.0 Reagents and Standards

The following reagents and standards are required to perform this procedure. When instructions are given on how to prepare a specific volume of a reagent or standard, larger or smaller volumes can be prepared as needed so long as the final concentrations remain the same. Any other deviations from the reagents or standards listed in this SOP could be detrimental to the quality of the data produced. Such deviations would have to be approved and documented.

10.1 Instructions for labeling and record keeping of reagents and standards are contained in SOP 1010 Standard and Reagent Preparation.

10.2 Reagents – In methods where the purity of reagents is not specified, analytical reagent grade shall be used. Reagents of lesser purity than those specified by the test method shall not be used.

10.3 Standards

10.3.1 At least one of the standards must be traceable to a NIST traceable source when available. The manufacturer should include a certificate of analysis for each standard. If one is not provided, contact the manufacturer. Retain all certificates in the designated binder (see SOP 1010 Reagent Receiving).

10.3.2 Intermediate and Working standards (Sections 10.20 – 10.23) must be prepared volumetrically using class A volumetric glassware, calibrated micro-pipettes, or gas tight syringes. Do not use disposable pipettes to prepare standards.

10.3.3 The use of alternative standards will be allowed as long as the analytical and quality objectives of the SOP can be met.

10.4 Reagent Water: Reagent water will be interference free. All references to water in this method will refer to reagent water unless otherwise specified.

10.5 Sulfuric acid (H_2SO_4), concentrated: Trace Metal grade.

10.6 Hydrochloric Acid (HCl), concentrated: Trace Metal grade.

10.7 Nitric Acid (HNO_3), concentrated: Trace Metal grade.

10.8 Aqua Regia: Prepare immediately before use by carefully adding three volumes of concentrated HCl to one volume of concentrated HNO_3.

10.9 Stannous Chloride, Dihydrate ($SnCl_2 2H_2O$): Reagent Grade

10.10 Stannous chloride, 10% solution (w/v): Dissolve 100 g of $SnCl_2$ in 70 mL of concentrated HCl and dilute to 1 liter with reagent water.

10.11 Sodium Chloride (NaCl): Reagent Grade.

10.12 Hydroxylamine Hydrochloride: Reagent Grade, "Suitable for Mercury Determination".

10.13 Sodium chloride – hydroxylamine hydrochloride solution: dissolve 120 g of sodium chloride and 120 g of hydroxylamine hydrochloride in reagent water and dilute to 1 liter.

10.14 Potassium Permanganate ($KMnO_4$): Reagent Grade, "Suitable for Mercury Determination".

10.15 Potassium permanganate ($KMnO_4$), 5% solution (w/v): Dissolve 50 g of $KMnO_4$ in 1 liter of reagent water.

10.16 Potassium persulfate ($K_2S_2O_8$): Reagent Grade.

10.17 Potassium persulfate ($K_2S_2O_8$), 5% solution (w/v): Dissolve 50 g of $K_2S_2O_8$ in 1 liter of reagent water.

10.18 2%HNO_3/2%HCl rinse: Add 40mL of concentrated HNO_3 and 40 mL of concentrated HCl in reagent water and dilute to 2 liters.

10.19 Ottawa Sand

10.20 Stock Standard Solutions: 1000 mg/L mercury standards are purchased commercially. Standards from two separate sources are purchased, one to be used for calibration and the second to be used for calibration verification.

10.21 Intermediate Calibration Standard Solution: (CAL STD 10 mg/L) Add approximately 80 mL of reagent water to a 100 mL volumetric flask, add 0.500 mL of Nitric Acid, add 1.00 mL of Stock Standard Solution (1000 mg/L), dilute to final volume. Prepare fresh every 28 Days.

10.22 Intermediate Calibration Verification Standard Solution: (ICV/CCV 10 mg/L) Add approximately 80 mL of reagent water to a 100 mL volumetric flask, add 0.500 mL of Nitric Acid, add 1.00 mL of the second source Stock Standard Solution (1000 mg/L), dilute to final volume. Prepare fresh every 28 Days.

10.23 Working Calibration Standard Solution: (100.0 µg/L) Add approximately 80 mL of reagent water to a 100 mL volumetric flask, add 0.500 mL of Nitric Acid, add 1.00 mL of Intermediate Calibration Standard Solution (10.0 mg/L, Section 10.20), dilute to final volume. Prepare fresh weekly (Expires in 7 days).

10.24 Working Calibration Verification Standard Solution: (ICV/CCV 100.0 µg/L) Add approximately 80 mL of reagent water to a 100 mL volumetric flask, add 0.500 mL of Nitric Acid, add 1.00 mL of Intermediate Calibration Verification Standard Solution (10.0 mg/L, Section 10.21), dilute to final volume. Prepare fresh weekly (Expires in 7 days).

10.25 ICV Standard: Into a 50.0 mL centrifuge tube spike 0.30 mL of Working Calibration Verification Standard Solution: (ICV/CCV 100 µg/L, Section 10.23). Dilute to 30 mL with reagent water, **TV= 1.0 µg/L.**

10.26 CCV Standard: Into a 50.0 mL centrifuge tube spike 0.750 mL of Working Calibration Verification Standard Solution: (ICV/CCV 100 µg/L, Section 10.23). Dilute to 30 mL with reagent water, **TV= 2.50 µg/L.**

10.27 LCS/MS/MSD Spiking Solution: Spike 0.750 mL of Working Calibration Verification Standard Solution: (ICV/CCV 100 µg/L, Section 10.23) per sample.

10.28 Prepare Calibration Standards in 50.0 mL centrifuge tubes from the Working Calibration Standard Solution (100 µg/L Section 10.21) by dilution to 30.0 mL as follows:

Table 1 Mercury Calibration Standards

Calibration Standard Concentration, µg/L	Amount of solution to add to graduated tube, mL	Concentration of solution added to graduated tube, µg/mL	Final Volume, mL	µg Hg per 30 mL
7.00	2.10	100	30	0.21
5.00	1.50	100	30	0.15
2.50	0.75	100	30	0.075
1.00	0.30	100	30	0.03
0.50	0.15	100	30	0.015
0.25	0.075	100	30	0.075

11.0 Sample Collection, Preservation, Shipment and Storage

11.1 All samples are stored away from all standards, reagents, food, and other potentially contaminating sources in order to prevent cross contamination.

11.2 The following table summarizes the requirements for proper sample collection, preservation, shipment and storage.

Matrix	**Bottle Type**	**Preservation**	**Shipping & Storage**	**Minimum Sample Amount**	**Prep/Analysis Hold Time**
Solid	P, G	Chill to 4°C	Chill to 4°C	4 Oz.	28 days
Liquid	P, G	Acidify with HNO_3 to pH < 2		250 mL	28 days

[P= Polyethylene, G = Glass, AG = Amber Glass, etc.].

11.3 All sample containers should be pre-washed with detergents, acids, and reagent water. Plastic and glass containers are both suitable.

11.4 Aqueous samples must be acidified to a pH < 2 with HNO_3.

11.5 The maximum holding time for mercury is 28 days.

11.6 Non-aqueous samples shall be refrigerated, when possible, and analyzed as soon as possible.

11.7 It can be difficult to obtain a representative sample with wet or damp materials. Wet samples may be dried, crushed, and ground to reduce sub-sample variability as long as drying does not affect the extraction of the analytes of interest in the sample.

11.8 Sample Storage

11.8.1 Non-aqueous samples must be chilled to 4°C.

12.0 Quality Control

The following details the QC requirements that apply to this analysis. Each Quality Control Indicator (QCI) provides information pertaining to either method or individual sample performance. Our goal is to produce defensible data of known and documented quality.

The results of these QCI samples are used to assess the acceptability of data.

12.1 Blanks

The Method Blank analysis is performed to determine if any contamination is present in the analytical process and is used to evaluate acceptance of the batch of samples. The method blank must be processed along and under the same conditions as the associated samples, including cleanup procedures. The method blank must be analyzed at a minimum of 1 per preparation batch (see Section 8 for definition of a prep batch). The method blank is of a similar matrix (e.g., reagent water, Ottawa sand, glass beads, etc.) to the associated samples and is known to be free of the analytes of interest.

12.2 Laboratory Control Sample (LCS)

The LCS is used to evaluate the performance of the total analytical system, including all preparation and analysis steps. The LCS is a controlled matrix (e.g., reagent water, Ottawa sand; glass beads, etc.), known to be free of analytes of interest, spiked with known and verified concentrations of analytes. Alternatively the LCS may consist of a media containing known and verified concentrations of analytes or as Certified Reference Material (CRM). All LCS analyte concentrations must be within the calibration range. The LCS must be analyzed at a minimum of 1 per preparation batch (see Section 8 for definition of a prep batch).

12.3 Matrix Spike and Matrix Spike Duplicate (MS/MSD)

MS/MSDs indicate the effect of the sample matrix on the precision and accuracy of the results generated using the selected method. This information does not determine the validity of the entire batch. MS/MSDs must be analyzed at a minimum of 1 per 20 samples per matrix per preparation procedure, or as specified by the required test method. If an MS/MSD pair is not analyzed in the preparation batch, an LCS/LCSD pair is analyzed.

Samples chosen for matrix spiking are rotated among different clients and/or different client projects. This is accomplished through communication between the Department Manager and the analyst. In addition, designated samples, as indicated by client request or contract requirement, are matrix spiked.

12.4 Duplicates

Duplicates are defined as replicate aliquots of the same sample taken through the entire analytical procedure. The results from this analysis indicate the precision of the results for the specific sample using the selected method. The duplicate provides a usable measure of precision only when target analytes are found in the sample chosen for duplication. Duplicates are performed on replicate aliquots of actual samples. The duplicate analysis may be analyzed at a frequency of 1 per 20 samples per matrix per preparation procedure.

Samples chosen for duplicate analyses are rotated among different clients and/or different client projects. This is accomplished through communication between the Department Manager and the analyst.

Note: For this test method, the analysis of the Matrix Spike Duplicate (MSD) is used as a substitute for the laboratory duplicate. In those cases when there is insufficient sample to perform a MS and MSD analysis, the duplicate analysis is used to judge the precision of the analytical results. In those cases when there is insufficient sample to perform either a duplicate analysis or MSD analysis, the duplicate analysis of the LCS (LCS/LCSD) is used to judge the precision of the analytical results.

12.5 Post Digestion Spikes (PDS)

Post Digestion Spikes are used to check for matrix interference on a given matrix. Added after sample preparation, they provide a measure of recovery for every sample matrix. They may be analyzed at a frequency of 1 per 20 samples per matrix per preparation procedure.

13.0 Calibration and Standardization

Initial Calibration (ICAL)

In addition to achieving the reference method requirements for the minimum number of calibration standards and the acceptance criteria (statistics) for calibration curve fit, the following ICAL criteria also apply:

13.1 The ICAL must be a minimum of 5 standards, not including a blank.

13.2 The ICAL must be verified with a second source standard (ICV) prior to the analysis of samples.

13.3 Results of samples not bracketed by the ICAL range must be qualified on the final report. If possible, dilute the sample or extract and reanalyze in order to achieve a result within the calibrated range of the instrument.

13.4 The lowest calibration standard may establish the reporting limit. The reporting limit may also be based upon another point in the calibration curve. It must be greater than the detection limit.

13.5 The ICAL is digested weekly, and analyzed daily with the preparation batch. The digested standards are stored near the instrument and are labeled with the standard concentration, the matrix (S or W), and the date the standard was digested.

Initial Calibration Verification (ICV)

In addition to the method requirements, the following ICV criteria also apply:

13.6 Must be a second source standard from the ICAL standards or from a different manufacturer lot number.

13.7 Must be traceable to NIST when available.

13.8 Must be digested/analyzed every day a preparation batch is performed.

Continuing Calibration Verification (CCV)

In addition to the method requirements, the following CCV criteria also apply:

13.9 Must be digested/analyzed every day a preparation batch is performed.

13.10 Must be analyzed after every 10 samples and at the end of each analytical batch.

13.11 If the CCV results obtained are outside the acceptance criteria, corrective actions must be performed. If routine corrective actions fail to produce an acceptable *second consecutive (immediate)* CCV, then either the lab has to demonstrate performance after corrective action with two consecutive successful CCVs, or a new ICAL must be performed. If the instrument has not demonstrated acceptable performance, sample analyses cannot continue until a new ICAL is established and verified with an ICV. However, sample data associated with an unacceptable CCV may be reported as qualified data under the following special conditions:

13.11.1 When the acceptance criteria for CCV are exceeded high, i.e., high bias, and there are associated samples that are non-detects, then those non-detects may be reported. Otherwise the samples affected by the unacceptable calibration verification must be reanalyzed after a new ICAL has been established, evaluated and accepted.

13.11.2 When the acceptance criteria for the CCV are exceeded low, i.e., low bias, those sample results may be reported if they exceed a maximum regulatory limit/decision level. Otherwise the samples affected by the unacceptable verification must be reanalyzed after a new ICAL is established and verified with an ICV.

13.11.3 When the acceptance criteria for the CCV are exceeded and it is not possible to reanalyze the sample due to limited sample quantity AND a new sample cannot be obtained by the laboratory, the data may be reported with the appropriate data qualifiers if the client has been contacted and agrees, in writing, to accept the qualified data.

13.12 Records: Initial and Continuing Calibration Records will contain, at a minimum, the following:

Calibration date
Instrument
Analysis date
Analyst's initials or signature
Standard Concentration (appropriate units) and number of standards
Response (appropriate units)
Calibration curve
Evaluation of and Statistics for ICAL curve fit in order to judge calibration curve acceptance

Initial/Continuing Calibration Blank (ICB/CCB – Reagent Blank)

In addition to the method requirements, the following ICB/CCB criteria also apply:

13.13 Must be digested/analyzed every day a preparation batch is performed.

Note: For aqueous digestions, the Method Blank may act as the ICB/CCB.

13.14 Must be analyzed after Initial Calibration Verification (ICV).

13.15 Must be analyzed after every Continuing Calibration Verification (CCV).

Calibration Acceptance Summary (see Table 2):

Table 2 Quick reference of instrument Calibration Requirements

QCI	Frequency	Standards	Control Limits	Corrective Action
ICAL	Digested weekly, analyzed daily	Minimum 5 standards, see Table 1 for concentrations	r ≥0.995	Correct problem then repeat initial calibration
ICV	Digested and analyzed daily	1.00 µg/L	± 10% of true value	Correct problem then repeat ICV or repeat initial calibration
CCV	Digested and analyzed daily	2.50 µg/L	± 20% of true value	Correct problem then repeat CCV or repeat initial calibration
ICB/CCB	Digested daily, and analyzed after each ICV and CCV		< RL	Correct problem then repeat ICB/CCB or repeat initial calibration

Support Equipment

Autopipettes - Check autopipette to ensure standardization is within control limits (see SOP for Pipette Calibration).

Balances - Be sure the balance is checked prior to use and performance criteria are met (see SOP for Calibration of Balances).

Thermometers - Check the thermometer to ensure the calibration is not expired (see SOP for Thermometer Calibration). Check the thermometer during the analysis and record the corrected temperature in the analysis logbook.

14.0 Procedure

14.1 Digestion Procedure for Aqueous Samples (EPA METHOD 7470A)

14.1.1 Measure 30 ml of sample aliquot (or portion of sample diluted to 30 mL) into a 50 ml centrifuge tube. **Addition of all reagents should be done in the hood.**

14.1.2 Add 1.5 ml of concentrated H_2SO_4.

14.1.3 Add 0.75 ml of concentrated HNO_3.

14.1.4 Add 4.5 ml of $KMNO_4$ solution, cap, invert to mix, and let sit for at least 15 minutes. If samples are no longer purple after 15 minutes, (i.e. brown or clear) re-prepare sample at dilution.

14.1.5 Add 2.4 ml of $K_2S_2O_8$ solution, screw cap on tube and invert to mix.

14.1.6 Heat for two hours at 90-95°C in water bath or hot block. Record time in/time out in prep logbook. Record thermometer ID and bath/block temperature in prep logbook.

14.1.7 Cool and add 1.8 ml of Sodium Chloride - Hydroxylamine Hydrochloride solution to reduce excess $KMNO_4$. Invert to mix.

14.1.8 Samples are now ready for analysis on Cetac M-6000A according to method and instrument parameters.

14.1.9 Record all reagents used in prep logbook.

14.2 Digestion Procedure for Solid or Semisolid Samples (EPA METHOD 7471A)

14.2.1 Weigh approximately 0.3 g of sample into a 50 ml centrifuge tube. For Method Blank and LCS, weigh approximately 0.3 g of Ottawa sand.

14.2.2 Add 1.5 ml of DI H_2O

14.2.3 Add 1.5 ml Aqua Regia. **Add Aqua Regia and all other reagents in hood.**

14.2.4 Heat in a water bath or hot block at 90-95 °C for 2 minutes. Record time in/time out in prep logbook. Record thermometer ID and bath/block temperature in prep logbook.

14.2.5 Allow to cool for 5 minutes.

14.2.6 Add 15 ml DI H_2O.

14.2.7 Add 4.5 ml of $KMNO_4$, cap and invert to mix.

14.2.8 Heat in water bath at 90-95°C for 30 minutes. Record time in/time out in prep book.

14.2.9 Allow to cool for 15 minutes.

14.2.10 Add 1.8 ml Sodium Chloride – Hydroxylamine Hydrochloride solution to reduce excess $KMNO_4$.

14.2.11 Add 16.5 ml DI H_2O. Invert to mix.

14.2.12 Samples are now ready for analysis on Cetac M-6000A according to method and instrument parameters.

14.2.13 Standards for soils will be prepared as noted above in section 10.27 (Table 1). Before addition of reagents add 3 ml of DI H_2O to ensure the final volume is the same for samples and standards. Otherwise treat standards in the same manner as samples with regard to reagent addition, except add no additional water (omit steps 14.2.2, 14.2.6 and 14.2.11). Final volume of samples and standards should be 40.8 ml.

14.2.14 Record all reagents used in prep logbook.

14.3 Analysis

14.3.1 Turn on the gas.

14.3.2 Turn on the power to the instrument, the lamp, and the autosampler. Allow the lamp to warm up for at least 20 minutes.

14.3.3 Double click on the **Hg Analysis** icon on the desktop.

14.3.4 The main menu appears. Click on **Worksheet**, click on **Open**, and select an appropriate worksheet for analysis (currently **Daniel**).

14.3.5 Click on the **Filing** tab. Click on **Rename**, Click on **Yes**. Change the analyst, and the ICAL and QC solutions, as appropriate.

14.3.6 Disconnect the outlet gas (top tube) from the gas-liquid separator.

14.3.7 Attach the tubing to the pump – Stannous chloride solution on top, followed by the sample tubing, and finally the drain tubings.

14.3.8 Turn on the pump, and allow stannous chloride and rinse solution to start pumping into the gas-liquid separator. Pinch the drain tubing (or disconnect) to allow the gas-liquid separator to fill with solution. This process "wets" the center post of the gas-liquid separator. Once the center post has been sufficiently wetted, reconnect the drain tubing on the pump, and allow the gas-liquid separator to drain completely. Reattach the outlet gas tubing to the gas-liquid separator.

14.3.9 Click on the **Labels** tab. Type the samples into the table.

14.3.10 Load the samples into the autosampler tray.

14.3.11 Click on the **Analysis** tab. Click on **Instrument** on the menu and click on **Zero**. Click on the **Read** button, click on **Standard**, select **Standard 6**, and click **OK**. The instrument will now analyze the highest standard. Check for adequate response, and reproducibility.

14.3.12 Click on the **Start** button. Check the boxes for calibration (as necessary), instrument zero, and for report printing, and click **OK**.

14.3.13 Dilute and reanalyze any sample that exceeds the highest standard. Reanalyze any detectable sample if the %RSD exceeds 5 %.

14.3.14 After analysis, rinse the gas-liquid separator with an HNO_3 solution. Drain the gas-liquid separator completely. Turn off the gas, pump, autosampler, lamp, and then the instrument.

15.0 Data Reduction, Calculations and Loading

15.1 The data system will then prepare a calibration curve by plotting response versus standard concentration. Sample concentration is calculated from the regression equation.

NOTE: The LIMS program will convert µg/L (part per billion) concentrations from the instrument readout to mg/L or mg/Kg (part per million).

15.2 Report only those values that fall between the lowest and highest calibration standards. Samples exceeding the highest standard must be diluted and reanalyzed.

15.3 Aqueous samples - The concentration readout for aqueous sample distillates is µg Hg/L. It does not need further data reduction unless the initial sample volume was less than 30 mL. If less than 30 mL sample was digested, calculate the concentration as follows:

Concentration in mg Hg/L = readout * 0.001 (30 mL/ initial sample volume analyzed in mL)

15.4 Solid Samples – The concentration readout for soil and solid samples must be multiplied by the following factor: Factor = (30/ sample weight in g). Calculate the concentration of Hg in soil and solid samples as follows:

Concentration in mg Hg/L = readout * 0.001 (30 mL/ initial sample weight in g)

15.5 The procedure for uploading data into the LIMS system is detailed in SOP 1400 LIMS.

16.0 Method Performance

Demonstration of Capability (DOC)

All parameters of interest must meet the method acceptance criteria before actual sample analysis begins. See SOP 1230 Training for the procedure to perform and document the DOC. The DOCs for the analysts performing this method are located in the analysts' training form folders located in the QA office files.

A quality control (QC) reference concentrate is required containing each analyte at a concentration of 0.00025 mg/L for aqueous samples and 0.025 mg/Kg for soil samples using the ICV/CCV solution. The

QC reference sample is made using stock standards prepared independently from those used for calibration.

For each analyte calculate the mean recovery (X) and standard deviation (s) and the average % Recovery (%R). Compare X and s and %R with the corresponding acceptance criteria for accuracy and precision, respectively. Note: For aqueous samples, X must be within 0.00025 ± 0.00005 mg/L and s must be less than 0.00005 mg/L and %R must be within 100 ± 20%. Note: For soil samples, X must be within 0.025 ± 0.005 mg/Kg and s must be less than 0.005 mg/Kg and %R must be within 100 ± 20%. These limits are taken from established in-house criteria. If X and s and %R for all analytes meet the acceptance criteria, the system performance is acceptable and analysis of actual samples can begin. If any individual X or %R falls outside the range for accuracy, or any individual s exceeds the precision limit, then the system performance is unacceptable for that analyte and corrective action must be taken.

The Analyst performing the analysis on the Cetac Mercury Analyzer need only perform one DOC (either the aqueous or the soil DOC) to demonstrate capability in the analysis.

Comparison to Reference Method Data

There is no stated reference method criteria for LCS, Duplicates, or MS/MSD recoveries in EPA Methods 7470A or 7471A. EPA Method 7000 does require the recovery of an independent check standard (ICV) to be within ± 10% of the true value, and that the calibration check standard (CCV) be within ± 20% of the true value. EPA Methods 7470A and 7471A require a blank and 5 standards for the calibration curve. EPA Methods 7470A and 7471A recommend that the standards be digested daily. The laboratory digests the calibration standards weekly, but digests the ICV, CCV, and Reagent Blank with every preparation batch.

In-House Control Limits

Method performance data is on file in the laboratory QC department. Comparison of method performance data for the laboratory to the reference method criteria occurs when laboratory in-house acceptance limits are generated. In-house generated data is compared to the specifications of the reference method. If the in-house limits are within the specifications of the reference method, the control limits are updated in LIMS. If the in-house limits are not within specifications, an investigation is performed to determine the cause(s) of the problem and a corrective action is completed. The analysis may continue until enough data points are collected to regenerate new control limits. Any QC data generated outside of reference method limits during that time frame, is flagged.

The laboratory maintains performance records to document the quality of data that is generated. Method accuracy for samples is assessed and records maintained. After the analysis of 20 laboratory control samples, calculate the average percent recovery (R) and the standard deviation of the percent recovery (S).

Control limits for the method parameters are generated by the QC staff and distributed to the analysts via updates to the LIMS control charts. The control limits are calculated based on in-house performance data. At a minimum, these limits are reviewed annually.

17.0 Pollution Prevention

17.1 The preparation of excessive volumes of laboratory reagents and standards shall be avoided so that waste and potential for pollution are minimized. Samples, reagents and standards shall be disposed in compliance with the laboratory waste disposal program, SOP 1130. With the consent of the client, the samples may be returned to their origin for treatment.

17.2 Uncontaminated paper waste, glass and cans should be separated for recycling. Laboratory staff are required to protect the laboratory's and our clients' business information when disposing of recycling or waste from the facility.

18.0 Data Assessment and Criteria for Quality Control Measures

The laboratory must maintain records to document the quality of data that is generated. Ongoing data quality checks are compared with established performance criteria to determine if the results of analyses meet the performance characteristics of the method. When results of QC samples indicate atypical method performance, a calibration verification standard is used to confirm the measurements were performed in an in-control mode of operation. The data review is conducted according to SOP 1250 Data Review.

Method Blank (MB)

If the blank exceeds the RL (usually the lowest calibration standard), the source of contamination must be investigated and corrective actions taken.

Affected samples must be reprocessed and reanalyzed **or** Data must be appropriately qualified if:

1) The concentration of a targeted analyte in the blank is at or above the reporting limit as established by the SOP or by regulation, AND is greater than 1/10 of the amount measured in any sample.

2) The blank contamination otherwise affects the sample results as per the test method requirements or the individual project data quality objectives.

Laboratory Control Sample (LCS)

The results of the individual batch LCS are calculated in percent recovery (%R) and compared to established acceptance criteria (in-house limits). LCS %R limits are 100 ± 20% for both aqueous and soil samples. If the LCS is outside the acceptance criteria, the analytical system is "out of control". Any affected samples associated with an out of control LCS must be reprocessed and reanalyzed or the results reported with appropriate data qualifiers.

Note: An LCS consisting of a media containing known and verified concentrations, or a Certified Reference Material (CRM) may have limits different from the limits listed above.

Matrix Spikes

The results from MS/MSD are primarily designed to assess the precision and accuracy of analytical results in a given matrix and are expressed as percent recovery (%R) and relative percent difference (RPD). See the STAT QAM, Section 5.4 for the calculation for RPD. Results are compared to established acceptance criteria (in-house limits). For aqueous and soil samples, MS/MSD %R limits are 100 ± 25% and RPD limits are 20%. For matrix spike results outside established criteria corrective action must be documented, or the data for the spiked sample is reported with appropriate data qualifying codes.

Note: If the original sample result is sufficiently high (greater than four times the MS/MSD spike level), then % R limits may not apply.

Duplicates

The results from laboratory Duplicates are designed to assess the precision of analytical results in a given matrix and are expressed as relative percent difference (RPD). See the STAT QAM, Section 5.4 for the calculation for RPD. Results are compared to established acceptance criteria (in-house limits). RPD limits are 20 %. For duplicates results outside established criteria corrective action must be documented, or the data for the duplicate sample is reported with appropriate data qualifying codes.

Post Digestion Spike

The results from PDS are primarily designed to assess the accuracy of analytical results in a given matrix and are expressed as percent recovery (%R). For aqueous and soil samples, PDS %R limits are 100 ± 15%. For post digestion spike results outside established criteria corrective action must be documented, or the data for the spiked sample is reported with appropriate data qualifying codes.

19.0 Corrective Actions for Out-of-Control Data

The process for handling unacceptable and out of control data is found in SOP 230 Corrective Action.

If the CCV, MB, LCS/LCSD, MS/MSD, lab duplicate, PDS, or some other QC sample recovery of any parameter falls outside the designated acceptance range, the laboratory performance for that parameter is judged to be out of control, and the problem must be immediately identified and corrected. The analytical result for that parameter in the samples is suspect and is only reported for regulatory compliance purposes with the appropriate corrective action form. Immediate corrective action includes reanalyzing all affected samples by using any retained sample before the expiration of the holding time. Final data results must be qualified in the client report for reported results not meeting the laboratory defined criteria.

1) Review standards preparation logbooks. Check all calculations and ensure dilution factors are properly recorded.
2) Re-prepare the suspected standard or QC sample to identify possible preparation errors of the standard or QC sample.
3) Re-Analyze the samples when the CCV or LCS are not within acceptable limits.

4) Perform routine preventative maintenance following manufacturer's specification. Record all maintenance in the instrument logbook.

20.0 Contingencies for Handling Out-of-Control or Unacceptable Data

Every effort is made to prevent problems from occurring. When out of control or unacceptable data occurs the first option is to identify the problem and reanalyze the samples within the holding times. When this is not possible, the QA Manager and/or the Laboratory Director reviews data and discusses options with the client. Reanalysis or reporting the data with qualification are alternatives. Out of control or unacceptable data reported to the client must include the data qualifier, flag and discussion on the rationale for reporting.

Holding time exceedence, or improper preservation are noted on the corrective action form and included on the final report.

20.1 The process for handling unacceptable and out of control data is found in the Laboratory QAM Section 11. The reporting of data that is out of control must be approved and documented by Quality Assurance Manager and either the Technical Manager or the Laboratory Director.

20.2 Client Requested Modifications:

20.2.1 Clients must request modifications from the laboratory SOP in writing to the lab.

20.2.2 The Laboratory Director, Technical Manager and Quality Assurance Manager will evaluate the requested client deviations, determine the feasibly of the deviation and the potential effects on the data.

20.2.3 If it is determined that the laboratory will perform the requested deviations, the Laboratory Director, Technical Manager and Quality Assurance Manager will decide if a method validation study is required.

20.2.4 The designated project manager will retain all documentation concerning the requested deviation, including all correspondence with the client, in the client folder.

20.2.5 The final analytical report must include the statement "*This report has analyses performed using client requested modifications* ".

21.0 Waste Management

The STAT Analysis Corporation Waste Disposal SOP 1130 identifies proper waste management practices for the chemicals and biological materials used in this procedure. Samples are stored and discarded in accordance with SOP 1130 Waste Disposal.

22.0 References

22.1 SW 846 3rd Edition, Method 7471A, Mercury in Solid or Semisolid Waste and 7470A Mercury in Liquid Waste.
22.2 STAT SOPs [sample prep]
22.3 STAT SOPs [support equipment, recordkeeping, MDLs, etc]
22.4 SOP 230 Corrective Actions
22.5 SOP 1010 Standard and Reagent Preparation
22.6 SOP 1400 LIMS
22.7 SOP 1130 Waste Disposal
22.8 SOP 003 Chemical Hygiene Plan
22.9 SOP 1250 Data Review
22.10 Manufacturers' Equipment Instruction Manuals
22.11 SOP 1230 Training
22.12 STAT Analysis Corporation Quality Assurance Manual
22.13 NELAC Chapter 5 Quality Systems, Approved May 25, 2001
22.14 Guidance for the Preparation of Standard Operating Procedures (G-6) EPA/240/B-01/004 March 2001

23.0 Forms, Figures, Tables, Diagrams, Flowcharts, Attachments or Validation Data.

23.1 Appendix A Prep Logbook

Appendix A – Prep Logbook

Mercury Prep LogBook (SOP# 4530)

Matrix: W = Water, S = Soil, T = TCLP

Time in Bath ______________
Time out of Bath ______________
Water Bath Temperature ______________
Thermometer ID ______________

Analyst(s)	Date	Sample ID	Bottle #	Matrix	Sample Wt./ Vol. (g or mls)	Final Volume (mls)	Spike Volume (mls)	Spike Solution ID#	Comments

Digestion Reagents

Potassium Permanganate ______________
Potassium Persulfate ______________
Hydroxylamine Hydrochloride ______________

Sulfuric Acid ______________
Hydrochloric Acid ______________
Nitric Acid ______________

Reviewed by ______________

Page 1 of 200

DISPOSAL FACILITY INFORMATION

DETROIT, Inc.
1923 FREDERICK STREET • DETROIT, MICHIGAN 48211 • TEL 800 495 6059 • FAX 313 923 3375 • www.eqonline.com

September 10, 2008

Mr. Richard Conforti
Hazardous Waste Management Unit
Michigan Department of Environmental Quality
Constitution Hall, Atrium North
525 West Allegan Street
Lansing, MI 48933

Dear Mr. Conforti

Re: EQ Detroit, Inc. EPA No. MID 980 991 566

Part A and Part B Permit Application

EQD is submitting the following items to the Michigan Department of Environmental Quality (MDEQ), Waste and Hazardous Materials Division to fulfill the Part A and Part B Permit re-application requirements in accordance with Part 111 of Michigan's Natural Resources and Environmental Protection Act, 1994 PA 451, as amended and 40 CFR Part 270:

1. Binder #1: Permit Sections A through O
2. Binder #2: Appendices, Tables and Figures
3. 1 set B size Engineering Drawings
4. 1 set full size Engineering Drawings
5. CD #1: Permit Sections A through O, Appendices, Tables and Figures
6. CD #2: Engineering Drawings
7. CD #3: Hydrogeological Data
8. $500.00 Check

If you have any questions or comments, please don't hesitate to call me at 313-347-1300.

Sincerely,

Scott Binder

Director of Operations

MODIFICATION 1 – TRANSFER TO EQ DETROIT, INC.

DEQ

State of Michigan
Department of Environmental Quality
HAZARDOUS WASTE MANAGEMENT FACILITY OPERATING LICENSE

NAME OF LICENSEE: EQ Detroit, Inc.

NAME OF OWNER: EQ Detroit, Inc.

NAME OF OPERATOR: EQ Detroit, Inc.

NAME OF TITLEHOLDER OF LAND: EQ Detroit, Inc.

FACILITY NAME: EQ Detroit, Inc.

FACILITY LOCATION: 1923 Frederick Street, Detroit, Michigan 48211-2603

EPA IDENTIFICATION NUMBER: MID 980 991 566 EFFECTIVE DATE: December 12, 2003

REAPPLICATION DATE: June 15, 2008 EXPIRATION DATE: December 12, 2008

AUTHORIZED ACTIVITIES

Pursuant to Part 111 of Michigan's Natural Resources and Environmental Protection Act, 1994 PA 451, as amended (Act 451), being §§324.11101 to 324.11152 of the Michigan Compiled Laws, and the hazardous waste management administrative rules (hereafter called the "rules") promulgated thereunder, being R 299.9101 *et seq.* of the Michigan Administrative Code, by the Michigan Department of Environmental Quality (MDEQ), an operating license (hereafter called the "license") is issued to EQ Detroit, Inc. (hereafter called the "licensee") to operate a hazardous waste management facility located in Detroit, Michigan at latitude 42°22'17" and longitude 83°3'11". The licensee is authorized to conduct the following hazardous waste management activities:

☒ STORAGE	☒ TREATMENT	☐ DISPOSAL	☐ POST CLOSURE
☒ Container	☒ Container	☐ Landfill	☐ Tank
☒ Tank	☒ Tank	☐ Land Application	☐ Surface Impoundment
☐ Waste Pile	☐ Surface Impoundment	☐ Surface Impoundment	☐ Landfill
☐ Surface Impoundment	☐ Incinerator		☐ Waste Pile
☐ Drip Pad	☐ Other:		

APPLICABLE REGULATIONS AND LICENSE APPROVAL

The conditions of this license were developed in accordance with the applicable provisions of the rules, effective September 11, 2000. The licensee shall comply with all terms and conditions of this license. This license consists of the 27 pages of conditions attached hereto (including those in any Attachments 1 through 14) and the applicable regulations contained in R 299.9101 through R 299.11008, as specified in the license. For purposes of compliance with this license, applicable rules are those which are in effect on the date of issuance of this license in accordance with R 299.9521(3)(a).

This license is based on the information contained in the license application submitted on September 29, 1999 and any subsequent amendments (hereafter referred to as "the application"). Pursuant to R 299.9519(11)(c), the license may be revoked if the licensee fails, in the application or during the license issuance process, to disclose fully all relevant facts or, at any time, misrepresents any relevant facts. As specified in R 299.9519(1), the facility shall be constructed, operated, and maintained in accordance with Part 111 of Act 451, the rules, and this license.

This license is effective on the date of issuance and shall remain in effect for five years from the date of issuance, unless revoked pursuant to R 299.9519 or continued in effect as provided by the Michigan Administrative Procedures Act, 1969 PA 306, as amended (Act 306).

Issued this 12th day of December, 2003

By */s/ George W. Bruchmann*
George W. Bruchmann, Chief
Waste and Hazardous Materials Division

This license is hereby modified for transfer from US Liquids of Detroit, Inc. to EQ Detroit, Inc.

Modified this 15th day of March, 2004

By _____
George W. Bruchmann, Chief
Waste and Hazardous Materials Division

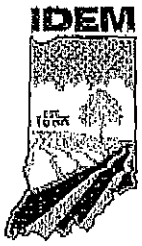

INDIANA DEPARTMENT OF ENVIRONMENTAL MANAGEMENT
We Protect Hoosiers and Our Environment.

Mitchell E. Daniels Jr.
Governor

Thomas W. Easterly
Commissioner

100 North Senate Avenue
Indianapolis, Indiana 46204
(317) 232-8603
Toll Free (800) 451-6027
www.idem.IN.gov

PART 70 Operating Permit Renewal
OFFICE OF AIR QUALITY

Veolia ES Blackfoot Landfill, Inc
3726 State Road 64 East
Winslow, Indiana 47598

(herein known as the Permittee) is hereby authorized to operate subject to the conditions contained herein, the source described in Section A (Source Summary) of this permit.

The Permittee must comply with all conditions of this permit. Noncompliance with any provision of this permit is grounds for enforcement action; permit termination, revocation and reissuance, or modification; or denial of a permit renewal application. Noncompliance with any provision of this permit, except any provision specifically designated as not federally enforceable, constitutes a violation of the Clean Air Act. It shall not be a defense for the Permittee in an enforcement action that it would have been necessary to halt or reduce the permitted activity in order to maintain compliance with the conditions of this permit. An emergency does constitute an affirmative defense in an enforcement action provided the Permittee complies with the applicable requirements set forth in Section B, Emergency Provisions.

This permit is issued in accordance with 326 IAC 2 and 40 CFR Part 70 Appendix A and contains the conditions and provisions specified in 326 IAC 2-7 as required by 42 U.S.C. 7401, et. seq. (Clean Air Act as amended by the 1990 Clean Air Act Amendments), 40 CFR Part 70.6, IC 13-15 and IC 13-17. This permit also addresses certain new source review requirements for existing equipment and is intended to fulfill the new source review procedures 326 IAC 2-7-10.5, applicable to those conditions.

Operating Permit No.: 125-17696-00033	
Issued by: Janet G. McCabe, Assistant Commissioner Office of Air Quality	Issuance Date: May 20, 2004 Expiration Date: May 20, 2009

Significant Permit Modification No.: 125-26702-00033	
Issued by: Tripurari Sinha Tripurari P. Sinha, Ph.D., Section Chief Office of Air Quality	Issuance Date: October 15, 2008 Expiration Date: May 20, 2009

INDIANA DEPARTMENT OF ENVIRONMENTAL MANAGEMENT
We Protect Hoosiers and Our Environment.

Mitchell E. Daniels, Jr.
Governor

Thomas W. Easterly
Commissioner

100 North Senate Avenue
Indianapolis, Indiana 46204
(317) 232-8603
Toll Free (800) 451-6027
www.idem.IN.gov

Mr. Joe Sutton
Veolia ES Blackfoot Landfill, Inc
3726 SR East
Winslow, 47598

October 15, 2008

Re: 125-26702-00033
Significant Permit Modification to
Part 70 Renewal No.: T 125-17696-00033

Dear Mr. Joe Sutton:

Veolia ES Blackfoot Landfill, Inc was issued a Part 70 Operating Permit Renewal on May 20, 2004 for a municipal solid waste landfill (MSLWLF). A letter requesting changes to this permit was received on June 23, 2008. Pursuant to the provisions of 326 IAC 2-7-12 a significant permit modification to this permit is hereby approved as described in the attached Technical Support Document.

All other conditions of the permit shall remain unchanged and in effect. For your convenience, the entire Part 70 Operating Permit as modified will be provided at issuance.

This decision is subject to the Indiana Administrative Orders and Procedures Act – IC 4-21.5-3-5. If you have any questions on this matter, please contact Josiah Balogun, OAQ, 100 North Senate Avenue, MC 61-53, Room 1003, Indianapolis, Indiana, 46204-2251, or call at (800) 451-6027, and ask for Josiah Balogun or extension (4-5257), or dial (317) 234-5257.

Sincerely,

Tripurari Sinha

Tripurari P. Sinha, Ph.D., Section Chief
Permits Branch
Office of Air Quality

Attachments:
Updated Permit
Technical Support Document

JB

cc: File – Pike County
Pike County Health Department
U.S. EPA, Region V
Regional Office
Air Compliance Inspector
Compliance Data Section
Permits Administration and Development

BACKFILL MATERIAL INFORMATION

Pinaki Banerjee
STAT Analysis Corp
2242 W Harrison Street
Suite 200
Chicago, IL 60612

SOIL-64™ Final Report

Soil/Hazardous Waste Proficiency Testing

Soil Study

Open Date: 10/20/08

Close Date: 12/04/08

Report Issued Date: 12/23/08

December 23, 2008

Pinaki Banerjee
STAT Analysis Corp
2242 W Harrison Street
Suite 200
Chicago, IL 60612

Enclosed is your final report for ERA's SOIL-64 Proficiency Testing (PT) study. Your final report includes an evaluation of all results submitted by your laboratory to ERA.

Data Evaluation Protocols: All analytes in ERA's SOIL-64 Proficiency Testing (PT) study have been evaluated using the following tiered approach. If the analyte is listed in the most current National Environmental Laboratory Accreditation Conference (NELAC) PT Field of Testing tables, the evaluation was completed by comparing the reported result to the acceptance limits generated using the criteria contained in the NELAC FoPT tables. If the analyte is not included in the NELAC FoPT tables, the reported result has been evaluated using the procedures outlined in ERA's Standard Operating Procedure for the Generation of Performance Acceptance Limits (SOP 0260).

Corrective Action Help: As part of your accreditation(s), you may be required to identify the root cause of any "Not Acceptable" results, implement the necessary corrective actions, and then satisfy your PT requirements by participating in a Supplemental (QuiK™ Response) or future ERA PT study. ERA's technical staff is available to help your laboratory resolve any technical issues that may be impairing your PT performance and possibly affecting your routine data quality. Our laboratory and technical staff have well over three hundred years of collective experience in performing the full range of environmental analyses. As part of our technical support, ERA offers QC samples that can be helpful in helping you work through your technical issues.

Thank you for your participation in ERA's SOIL-64 Proficiency Testing study. If you have any questions, please contact Shawn Kassner, Proficiency Testing Manager, or Curtis Wood, Director of Regulatory Affairs and Business Development, at 1-800-372-0122.

Sincerely,

Shawn Kassner
Proficiency Testing Manager

Jay R. McBurney
Quality Program Manager

attachments
smk

Report Recipient	Contact/Phone Number	Reporting Type
Illinois	Scott Siders / 217-785-5163	All Analytes
Oregon	Irene Ronning Ph.D / 503-693-4122	All Analytes

SOIL-64 Definitions & Study Discussion

Study Dates: 10/20/08 - 12/04/08 **Report Issued: 12/23/08**

SOIL Study Definitions

The Reported Value is the value that the laboratory reported to ERA.

The ERA assigned value for the Organic Proficiency Testing Standards is equal to 100% of the parameter present in the standard as determined by gravimetric and/or volumetric measurements made during standard preparation as applicable. The ERA assigned value for the Inorganic Proficiency Testing Standards, with the exception of the TCLP Metals in Soil, is equal to the maximum amount of the parameter available in the standard by applicable EPA methodologies. The ERA assigned value for the TCLP metals is equal to the mean of ERA's internal analytical analyses. All NELAC parameters not added to a standard are given an assigned Value of "0", per the guidance issued by the NELAC Board of Directors, on December 14, 2000. Non-NELAC parameters not added to a standard may be given an assigned value of less than a minimum verified concentration as determined in the background soil for applicable EPA methodologies.

The Acceptance Limits are established per the criteria contained in the most current USEPA/NELAC FoPT tables, or ERA's SOP for the Generation of Performance Acceptance Limits™ as applicable.

The Performance Evaluation:

Acceptable	= Reported Value falls within the Acceptance Limits.
Not Acceptable	= Reported Value falls outside the Acceptance Limits.
No Evaluation	= Reported Value cannot be evaluated.
Not Reported	= No Value reported.

The Method Description is the method the laboratory reported to ERA.

SOIL Study Discussion

ERA's SOIL-64 Proficiency Testing (PT) study has been reviewed by ERA senior management and certified compliant with the requirements of the National Environmental Laboratory Accreditation Conference (NELAC), Proficiency Testing Program Standards, Chapter 2, July 2003.

Per the requirements of the NELAC Proficiency Testing Program, a full review of all homogeneity, stability, and accuracy verification data was completed. All analytical verification data for all analytes in the Soil study standards met the acceptance criteria contained in the NELAC Proficiency Testing Program Standards, Chapter 2, July 2003. If the analyte is included in the NELAC Fields of Testing list the acceptance limits were calculated based on the NELAC Proficiency Testing Program Standards, Chapter 2, July 2003. If the analyte is not included in the NELAC Fields of Testing list, the acceptance limits were calculated using the procedures outlined in ERA's Standard Operating Procedure for the Generation of Performance Acceptance Limits (SOP 0260, Rev. 2.0).

The data submitted by participating laboratories was also examined for study anomalies. There was one anomaly observed during the statistical review of the data. If your laboratory received the Volatiles in Soil standard this anomaly is addressed on the following page.

ERA's SOIL-64 Proficiency Testing study reports shall not be reproduced except in its entirety and not without the permission of the participating laboratory. The report must not be used by the participating laboratories to claim product endorsement any agency of the U. S. government.

The data contained herein are confidential and intended for your use only.

If you have any questions or concerns regarding your assessment in ERA's SOIL Proficiency Testing program, please contact Shawn Kassner, Proficiency Testing Manager, or Curtis Wood, Director of Regulatory Affairs and Business Development, at 1-800-372-0122.

ACCREDITED

SOIL-64 Study Anomalies

Study Dates: 10/20/08 - 12/04/08 **Report Issued: 12/23/08**

Study Discussion Volatiles in Soil - Acetonitrile

In ERA's Soil-64 study, acetonitrile was spiked into the Volatiles in Soil sample at 567 µg/kg. Acetonitrile is not a NELAC analyte and its acceptance limits for this study were set to ± 3 standard deviations around the study mean. Based on the number of less than values reported in this study and the range of associated detection limits, the following criteria were used to evaluate these reported values. If the numeric value associated with a less than result was greater than the lower acceptance limit, the reported value was evaluated as "Acceptable". If the numeric value associated with a less than value was below the lower acceptance limit, the reported value was evaluated as "Not Acceptable".

If you have any questions concerning the analysis of Acetonitrile, please call ERA's Organic Chemistry Group. If you have any questions concerning the evaluation of the data please call ERA's PT Group. Both can be reached at 1-800-372-0122.

Study: **SOIL-64**

ERA Customer Number: **S744101**

Laboratory Name: **STAT Analysis Corp**

SOIL-64 Final Complete Report

Pinaki Banerjee
STAT Analysis Corp
2242 W Harrison Street
Suite 200
Chicago, IL 60612
(312) 563-0371

EPA ID: IL00086
ERA Customer Number: S744101
Report Issued: 12/23/08
Study Dates: 10/20/08 - 12/04/08

Anal. No.	Analyte	Units	Reported Value	Assigned Value	Acceptance Limits	Performance Evaluation	Method Description
SOIL Metals in Soil							
1000	Aluminum	mg/kg	10500	12100	4710 - 15900	Acceptable	EPA 6020
1005	Antimony	mg/kg	95.9	237	23.7 - 261	Acceptable	EPA 6020
1010	Arsenic	mg/kg	151	170	111 - 204	Acceptable	EPA 6020
1015	Barium	mg/kg	336	366	258 - 438	Acceptable	EPA 6020
1020	Beryllium	mg/kg	99.1	115	79.4 - 133	Acceptable	EPA 6020
1025	Boron	mg/kg	126	160	86.0 - 186	Acceptable	EPA 6020
1030	Cadmium	mg/kg	168	206	137 - 237	Acceptable	EPA 6020
1035	Calcium	mg/kg	8630	10000	7280 - 12000	Acceptable	EPA 6020
1040	Chromium	mg/kg	79.1	100	61.9 - 117	Acceptable	EPA 6020
1050	Cobalt	mg/kg	248	302	206 - 348	Acceptable	EPA 6020
1055	Copper	mg/kg	112	137	96.9 - 162	Acceptable	EPA 6020
1070	Iron	mg/kg	14800	18700	7920 - 29200	Acceptable	EPA 6020
1075	Lead	mg/kg	175	187	127 - 216	Acceptable	EPA 6020
1085	Magnesium	mg/kg	4440	5310	3590 - 6470	Acceptable	EPA 6020
1090	Manganese	mg/kg	556	647	492 - 773	Acceptable	EPA 6020
1095	Mercury	mg/kg		8.52	3.76 - 10.9	Not Reported	
1100	Molybdenum	mg/kg	80	94.0	55.4 - 105	Acceptable	EPA 6020
1105	Nickel	mg/kg	87.8	111	71.5 - 126	Acceptable	EPA 6020
1125	Potassium	mg/kg	3500	4470	2600 - 5420	Acceptable	EPA 6020
1140	Selenium	mg/kg	139	164	99.4 - 196	Acceptable	EPA 6020
1150	Silver	mg/kg	76	71.0	44.2 - 87.7	Acceptable	EPA 6020
1155	Sodium	mg/kg	765	910	519 - 1250	Acceptable	EPA 6020
1160	Strontium	mg/kg		185	124 - 228	Not Reported	
1165	Thallium	mg/kg	257	303	186 - 349	Acceptable	EPA 6020
1175	Tin	mg/kg	122	135	71.9 - 174	Acceptable	EPA 6020
1180	Titanium	mg/kg	309	491	50.8 - 846	Acceptable	EPA 6020
1185	Vanadium	mg/kg	170	219	142 - 246	Acceptable	EPA 6020
1190	Zinc	mg/kg	313	418	286 - 502	Acceptable	EPA 6020

All analytes are included in ERA's A2LA accreditation. Lab Code: 1539-01

SOIL-64 Final Complete Report

Pinaki Banerjee
STAT Analysis Corp
2242 W Harrison Street
Suite 200
Chicago, IL 60612
(312) 563-0371

EPA ID: IL00086
ERA Customer Number: S744101
Report Issued: 12/23/08
Study Dates: 10/20/08 - 12/04/08

Anal. No.	Analyte	Units	Reported Value	Assigned Value	Acceptance Limits	Performance Evaluation	Method Description
SOIL Metals in Soil							
1000	Aluminum	mg/kg		12100	4710 - 15900	Not Reported	
1005	Antimony	mg/kg		237	23.7 - 261	Not Reported	
1010	Arsenic	mg/kg		170	111 - 204	Not Reported	
1015	Barium	mg/kg		366	258 - 438	Not Reported	
1020	Beryllium	mg/kg		115	79.4 - 133	Not Reported	
1025	Boron	mg/kg		160	86.0 - 186	Not Reported	
1030	Cadmium	mg/kg		206	137 - 237	Not Reported	
1035	Calcium	mg/kg		10000	7280 - 12000	Not Reported	
1040	Chromium	mg/kg		100	61.9 - 117	Not Reported	
1050	Cobalt	mg/kg		302	206 - 348	Not Reported	
1055	Copper	mg/kg		137	96.9 - 162	Not Reported	
1070	Iron	mg/kg		18700	7920 - 29200	Not Reported	
1075	Lead	mg/kg		187	127 - 216	Not Reported	
1085	Magnesium	mg/kg		5310	3590 - 6470	Not Reported	
1090	Manganese	mg/kg		647	492 - 773	Not Reported	
1095	Mercury	mg/kg	7.5	8.52	3.76 - 10.9	Acceptable	EPA 7471A
1100	Molybdenum	mg/kg		94.0	55.4 - 105	Not Reported	
1105	Nickel	mg/kg		111	71.5 - 126	Not Reported	
1125	Potassium	mg/kg		4470	2600 - 5420	Not Reported	
1140	Selenium	mg/kg		164	99.4 - 196	Not Reported	
1150	Silver	mg/kg		71.0	44.2 - 87.7	Not Reported	
1155	Sodium	mg/kg		910	519 - 1250	Not Reported	
1160	Strontium	mg/kg		185	124 - 228	Not Reported	
1165	Thallium	mg/kg		303	186 - 349	Not Reported	
1175	Tin	mg/kg		135	71.9 - 174	Not Reported	
1180	Titanium	mg/kg		491	50.8 - 846	Not Reported	
1185	Vanadium	mg/kg		219	142 - 246	Not Reported	
1190	Zinc	mg/kg		418	286 - 502	Not Reported	
SOIL Hexavalent Chromium in Soil							
1045	Chromium VI	mg/kg	92.5	109	16.3 - 140	Acceptable	EPA 7196A
SOIL Cyanide in Soil							
1635	Cyanide, total	mg/kg	25.5	31.5	15.2 - 41.0	Acceptable	EPA 9012A
1640	Reactive Cyanide	mg/kg	< 1	< 25.0		Acceptable	EPA 9012A

All analytes are included in ERA's A2LA accreditation. Lab Code: 1539-01

Study: **SOIL-64**

ERA Customer Number: **S744101**

Laboratory Name: **STAT Analysis Corp**

SOIL-64 Final Complete Report

Pinaki Banerjee
STAT Analysis Corp
2242 W Harrison Street
Suite 200
Chicago, IL 60612
(312) 563-0371

EPA ID: IL00086
ERA Customer Number: S744101
Report Issued: 12/23/08
Study Dates: 10/20/08 - 12/04/08

Anal. No.	Analyte	Units	Reported Value	Assigned Value	Acceptance Limits	Performance Evaluation	Method Description
SOIL Volatiles in Soil							
4315	Acetone	µg/kg	340.11	372	40.0 - 627	Acceptable	EPA 8260B
4320	Acetonitrile	µg/kg		567	18.2 - 869	Not Reported	
4325	Acrolein	µg/kg	< 50	0.00		Acceptable	EPA 8260B
4375	Benzene	µg/kg	25.93	28.7	15.4 - 41.0	Acceptable	EPA 8260B
4385	Bromobenzene	µg/kg	159.76	177	105 - 242	Acceptable	EPA 8260B
4395	Bromodichloromethane	µg/kg	77.33	87.6	56.1 - 121	Acceptable	EPA 8260B
4400	Bromoform	µg/kg	< 5	0.00		Acceptable	EPA 8260B
4950	Bromomethane	µg/kg	131.24	114	33.0 - 172	Acceptable	EPA 8260B
4410	2-Butanone (MEK)	µg/kg	403.78	387	86.6 - 590	Acceptable	EPA 8260B
5000	tert-Butyl methyl ether (MTBE)	µg/kg	98.81	115	48.4 - 172	Acceptable	EPA 8260B
4450	Carbon disulfide	µg/kg	< 5	0.00		Acceptable	EPA 8260B
4455	Carbon tetrachloride	µg/kg	26.65	29.5	14.5 - 44.0	Acceptable	EPA 8260B
4475	Chlorobenzene	µg/kg	97.17	103	57.8 - 142	Acceptable	EPA 8260B
4575	Chlorodibromomethane	µg/kg	119.13	134	81.8 - 184	Acceptable	EPA 8260B
4485	Chloroethane	µg/kg	< 10	0.00		Acceptable	EPA 8260B
4500	2-Chloroethylvinylether	µg/kg	< 50	0.00		Acceptable	EPA 8260B
4505	Chloroform	µg/kg	70.68	69.3	41.5 - 97.3	Acceptable	EPA 8260B
4960	Chloromethane	µg/kg	< 10	0.00		Acceptable	EPA 8260B
4570	1,2-Dibromo-3-chloropropane (DBCP)	µg/kg	167.11	168	91.6 - 237	Acceptable	EPA 8260B
4585	1,2-Dibromoethane (EDB)	µg/kg	64.73	72.7	52.6 - 94.5	Acceptable	EPA 8260B
4595	Dibromomethane	µg/kg	< 5	0.00		Acceptable	EPA 8260B
4610	1,2-Dichlorobenzene	µg/kg	< 5	0.00		Acceptable	EPA 8260B
4615	1,3-Dichlorobenzene	µg/kg	183.49	196	77.4 - 289	Acceptable	EPA 8260B
4620	1,4-Dichlorobenzene	µg/kg	< 5	0.00		Acceptable	EPA 8260B
4625	Dichlorodifluoromethane (Freon 12)	µg/kg	< 10	0.00		Acceptable	EPA 8260B
4630	1,1-Dichloroethane	µg/kg	108.23	118	66.9 - 170	Acceptable	EPA 8260B
4635	1,2-Dichloroethane	µg/kg	< 5	0.00		Acceptable	EPA 8260B
4640	1,1-Dichloroethylene	µg/kg	222.18	192	110 - 301	Acceptable	EPA 8260B
4645	cis-1,2-Dichloroethylene	µg/kg	40.01	42.4	23.6 - 58.9	Acceptable	EPA 8260B
4700	trans-1,2-Dichloroethylene	µg/kg	55.47	55.1	32.8 - 80.7	Acceptable	EPA 8260B
4655	1,2-Dichloropropane	µg/kg	146.08	166	97.0 - 221	Acceptable	EPA 8260B
4680	cis-1,3-Dichloropropylene	µg/kg	42.03	47.8	32.4 - 57.1	Acceptable	EPA 8260B

All analytes are included in ERA's A2LA accreditation. Lab Code: 1539-01

Pinaki Banerjee
STAT Analysis Corp
2242 W Harrison Street
Suite 200
Chicago, IL 60612
(312) 563-0371

EPA ID: IL00086
ERA Customer Number: S744101
Report Issued: 12/23/08
Study Dates: 10/20/08 - 12/04/08

Anal. No.	Analyte	Units	Reported Value	Assigned Value	Acceptance Limits	Performance Evaluation	Method Description
SOIL Volatiles in Soil (Continued)							
4685	trans-1,3-Dichloropropylene	µg/kg	< 2	0.00		Acceptable	EPA 8260B
4765	Ethylbenzene	µg/kg	77.85	93.2	51.4 - 134	Acceptable	EPA 8260B
4860	2-Hexanone	µg/kg	358.14	384	114 - 599	Acceptable	EPA 8260B
4900	Isopropylbenzene	µg/kg	< 5	0.00		Acceptable	EPA 8260B
4975	Methylene chloride	µg/kg	75.6	77.3	35.9 - 114	Acceptable	EPA 8260B
4995	4-Methyl-2-pentanone (MIBK)	µg/kg	129.53	135	57.4 - 199	Acceptable	EPA 8260B
5005	Naphthalene	µg/kg	96.78	104	36.6 - 157	Acceptable	EPA 8260B
5100	Styrene	µg/kg	< 5	0.00		Acceptable	EPA 8260B
5105	1,1,1,2-Tetrachloroethane	µg/kg	129.74	147	96.0 - 199	Acceptable	EPA 8260B
5110	1,1,2,2-Tetrachloroethane	µg/kg	< 5	0.00		Acceptable	EPA 8260B
5115	Tetrachloroethylene	µg/kg	< 5	0.00		Acceptable	EPA 8260B
5140	Toluene	µg/kg	131.28	138	79.5 - 194	Acceptable	EPA 8260B
5155	1,2,4-Trichlorobenzene	µg/kg	52.48	67.1	29.8 - 97.2	Acceptable	EPA 8260B
5160	1,1,1-Trichloroethane	µg/kg	29.20	34.2	17.4 - 48.3	Acceptable	EPA 8260B
5165	1,1,2-Trichloroethane	µg/kg	< 5	0.00		Acceptable	EPA 8260B
5170	Trichloroethylene	µg/kg	159.81	182	93.8 - 259	Acceptable	EPA 8260B
5175	Trichlorofluoromethane	µg/kg	200.30	168	95.4 - 260	Acceptable	EPA 8260B
5180	1,2,3-Trichloropropane (TCP)	µg/kg	84.39	88.7	21.2 - 143	Acceptable	EPA 8260B
5225	Vinyl acetate	µg/kg	< 10	0.00		Acceptable	EPA 8260B
5235	Vinyl chloride	µg/kg	180.98	160	70.9 - 274	Acceptable	EPA 8260B
5260	Xylenes, total	µg/kg	239.97	283	140 - 414	Acceptable	EPA 8260B

All analytes are included in ERA's A2LA accreditation. Lab Code: 1539-01

SOIL-64 Final Complete Report

Pinaki Banerjee
STAT Analysis Corp
2242 W Harrison Street
Suite 200
Chicago, IL 60612
(312) 563-0371

EPA ID: **IL00086**
ERA Customer Number: **S744101**
Report Issued: **12/23/08**
Study Dates: **10/20/08 - 12/04/08**

Anal. No.	Analyte	Units	Reported Value	Assigned Value	Acceptance Limits	Performance Evaluation	Method Description
SOIL Base/Neutrals and Acids in Soil							
5500	Acenaphthene	µg/kg	4900	8700	2420 - 10300	Acceptable	EPA 8270C
5505	Acenaphthylene	µg/kg	3700	5920	1460 - 7610	Acceptable	EPA 8270C
5145	2-Amino-1-methylbenzene (o-toluidine)	µg/kg		0.00		Not Reported	
5545	Aniline	µg/kg	< 170	0.00		Acceptable	EPA 8270C
5555	Anthracene	µg/kg	4300	8340	2160 - 10700	Acceptable	EPA 8270C
5595	Benzidine	µg/kg	< 800	0.00		Acceptable	EPA 8270C
5610	Benzoic acid	µg/kg	< 800	0.00		Acceptable	EPA 8270C
5575	Benzo(a)anthracene	µg/kg	1400	2050	639 - 2850	Acceptable	EPA 8270C
5585	Benzo(b)fluoranthene	µg/kg	6100	9310	2730 - 12500	Acceptable	EPA 8270C
5600	Benzo(k)fluoranthene	µg/kg	1700	5420	1510 - 7200	Acceptable	EPA 8270C
5590	Benzo(g,h,i)perylene	µg/kg	2600	4240	972 - 6020	Acceptable	EPA 8270C
5580	Benzo(a)pyrene	µg/kg	1800	3080	757 - 4230	Acceptable	EPA 8270C
5630	Benzyl alcohol	µg/kg	< 170	0.00		Acceptable	EPA 8270C
5760	bis(2-Chloroethoxy)methane	µg/kg	4500	13600	2820 - 16100	Acceptable	EPA 8270C
5765	bis(2-Chloroethyl)ether	µg/kg	2700	9340	1770 - 10500	Acceptable	EPA 8270C
5780	bis(2-Chloroisopropyl)ether	µg/kg	1900	6730	834 - 7930	Acceptable	EPA 8270C
5660	4-Bromophenyl-phenylether	µg/kg	8100	9560	3000 - 12400	Acceptable	EPA 8270C
5670	Butylbenzylphthalate	µg/kg	< 170	0.00		Acceptable	EPA 8270C
5680	Carbazole	µg/kg	< 170	0.00		Acceptable	EPA 8270C
5745	4-Chloroaniline	µg/kg	< 170	0.00		Acceptable	EPA 8270C
5700	4-Chloro-3-methylphenol	µg/kg	3700	8460	2250 - 9640	Acceptable	EPA 8270C
5790	1-Chloronaphthalene	µg/kg		0.00		Not Reported	
5795	2-Chloronaphthalene	µg/kg	1000	1920	337 - 2490	Acceptable	EPA 8270C
5800	2-Chlorophenol	µg/kg	3600	10800	1760 - 11900	Acceptable	EPA 8270C
5825	4-Chlorophenyl-phenylether	µg/kg	< 170	0.00		Acceptable	EPA 8270C
5855	Chrysene	µg/kg	1400	1890	612 - 2810	Acceptable	EPA 8270C
5895	Dibenz(a,h)anthracene	µg/kg	1200	1800	237 - 2720	Acceptable	EPA 8270C
5905	Dibenzofuran	µg/kg	4800	9040	2390 - 11000	Acceptable	EPA 8270C
5925	Di-n-butylphthalate	µg/kg	< 170	0.00		Acceptable	EPA 8270C
4610	1,2-Dichlorobenzene	µg/kg	4200	13900	1390 - 15300	Acceptable	EPA 8270C
4615	1,3-Dichlorobenzene	µg/kg	< 170	0.00		Acceptable	EPA 8270C
4620	1,4-Dichlorobenzene	µg/kg	< 170	0.00		Acceptable	EPA 8270C

All analytes are included in ERA's A2LA accreditation. Lab Code: 1539-01

Pinaki Banerjee
STAT Analysis Corp
2242 W Harrison Street
Suite 200
Chicago, IL 60612
(312) 563-0371

EPA ID: IL00086
ERA Customer Number: S744101
Report Issued: 12/23/08
Study Dates: 10/20/08 - 12/04/08

Anal. No.	Analyte	Units	Reported Value	Assigned Value	Acceptance Limits	Performance Evaluation	Method Description
SOIL Base/Neutrals and Acids in Soil (Continued)							
5945	3,3'-Dichlorobenzidine	µg/kg	< 330	0.00		Acceptable	EPA 8270C
6000	2,4-Dichlorophenol	µg/kg	1400	2800	300 - 3690	Acceptable	EPA 8270C
6005	2,6-Dichlorophenol	µg/kg		5410	1550 - 5950	Not Reported	
6070	Diethylphthalate	µg/kg	< 170	0.00		Acceptable	EPA 8270C
6130	2,4-Dimethylphenol	µg/kg	< 170	0.00		Acceptable	EPA 8270C
6135	Dimethylphthalate	µg/kg	4800	7820	2230 - 9750	Acceptable	EPA 8270C
6175	2,4-Dinitrophenol	µg/kg	2400	11400	0.00 - 12500	Acceptable	EPA 8270C
6185	2,4-Dinitrotoluene	µg/kg	4400	6530	1220 - 8830	Acceptable	EPA 8270C
6190	2,6-Dinitrotoluene	µg/kg	4000	6030	1810 - 7380	Acceptable	EPA 8270C
6200	Di-n-octylphthalate	µg/kg	9600	11300	1820 - 17400	Acceptable	EPA 8270C
6255	bis(2-Ethylhexyl)phthalate	µg/kg	< 330	0.00		Acceptable	EPA 8270C
6265	Fluoranthene	µg/kg	2700	4130	1360 - 5410	Acceptable	EPA 8270C
6270	Fluorene	µg/kg	4500	5740	1880 - 7330	Acceptable	EPA 8270C
6275	Hexachlorobenzene	µg/kg	< 170	0.00		Acceptable	EPA 8270C
4835	Hexachlorobutadiene	µg/kg	< 170	0.00		Acceptable	EPA 8270C
6285	Hexachlorocyclopentadiene	µg/kg	< 170	0.00		Acceptable	EPA 8270C
4840	Hexachloroethane	µg/kg	< 170	0.00		Acceptable	EPA 8270C
6315	Indeno(1,2,3-cd)pyrene	µg/kg	< 170	0.00		Acceptable	EPA 8270C
6320	Isophorone	µg/kg	< 170	0.00		Acceptable	EPA 8270C
6360	4,6-Dinitro-2-methylphenol	µg/kg	< 800	0.00		Acceptable	EPA 8270C
6385	2-Methylnaphthalene	µg/kg	2000	3800	1120 - 4420	Acceptable	EPA 8270C
6400	2-Methylphenol	µg/kg	2900	10700	1070 - 11800	Acceptable	EPA 8270C
6410	3&4-Methylphenol	µg/kg	1800	4720	421 - 5190	Acceptable	EPA 8270C
5005	Naphthalene	µg/kg	3500	6510	1300 - 7480	Acceptable	EPA 8270C
6460	2-Nitroaniline	µg/kg	< 800	0.00		Acceptable	EPA 8270C
6465	3-Nitroaniline	µg/kg	< 800	0.00		Acceptable	EPA 8270C
6470	4-Nitroaniline	µg/kg	< 800	0.00		Acceptable	EPA 8270C
5015	Nitrobenzene	µg/kg	4000	11000	1980 - 12600	Acceptable	EPA 8270C
6490	2-Nitrophenol	µg/kg	2900	6980	732 - 8400	Acceptable	EPA 8270C
6500	4-Nitrophenol	µg/kg	8600	13400	1340 - 18000	Acceptable	EPA 8270C
6525	N-Nitrosodiethylamine	µg/kg		0.00		Not Reported	
6530	N-Nitrosodimethylamine	µg/kg	2100	4720	633 - 5190	Acceptable	EPA 8270C

All analytes are included in ERA's A2LA accreditation. Lab Code: 1539-01

Pinaki Banerjee
STAT Analysis Corp
2242 W Harrison Street
Suite 200
Chicago, IL 60612
(312) 563-0371

EPA ID: IL00086
ERA Customer Number: S744101
Report Issued: 12/23/08
Study Dates: 10/20/08 - 12/04/08

Anal. No.	Analyte	Units	Reported Value	Assigned Value	Acceptance Limits	Performance Evaluation	Method Description
SOIL Base/Neutrals and Acids in Soil (Continued)							
6535	N-Nitrosodiphenylamine	µg/kg	< 170	0.00		Acceptable	EPA 8270C
6545	N-Nitroso-di-n-propylamine	µg/kg	< 170	0.00		Acceptable	EPA 8270C
6590	Pentachlorobenzene	µg/kg		0.00		Not Reported	
6605	Pentachlorophenol	µg/kg	4000	8240	824 - 9060	Acceptable	EPA 8270C
6615	Phenanthrene	µg/kg	4600	8060	2680 - 10000	Acceptable	EPA 8270C
6625	Phenol	µg/kg	3800	11400	1140 - 13400	Acceptable	EPA 8270C
6665	Pyrene	µg/kg	4900	8450	2570 - 10700	Acceptable	EPA 8270C
5095	Pyridine	µg/kg	< 170	0.00		Acceptable	EPA 8270C
6715	1,2,4,5-Tetrachlorobenzene	µg/kg		0.00		Not Reported	
6735	2,3,4,6-Tetrachlorophenol	µg/kg		0.00		Not Reported	
5155	1,2,4-Trichlorobenzene	µg/kg	2600	6610	1140 - 7570	Acceptable	EPA 8270C
6835	2,4,5-Trichlorophenol	µg/kg	3800	7240	1090 - 8870	Acceptable	EPA 8270C
6840	2,4,6-Trichlorophenol	µg/kg	8500	13000	2830 - 14800	Acceptable	EPA 8270C
SOIL Organochlorine Pesticides in Soil							
7025	Aldrin	µg/kg	350	348	95.5 - 419	Acceptable	EPA 8081A
7110	alpha-BHC	µg/kg	190	191	45.1 - 229	Acceptable	EPA 8081A
7115	beta-BHC	µg/kg	320	353	62.8 - 451	Acceptable	EPA 8081A
7105	delta-BHC	µg/kg	220	228	47.4 - 294	Acceptable	EPA 8081A
7120	gamma-BHC(Lindane)	µg/kg	420	438	111 - 513	Acceptable	EPA 8081A
7240	alpha-Chlordane	µg/kg	160	157	48.5 - 199	Acceptable	EPA 8081A
7245	gamma-Chlordane	µg/kg	430	429	164 - 498	Acceptable	EPA 8081A
7355	4,4'-DDD	µg/kg	350	368	116 - 456	Acceptable	EPA 8081A
7360	4,4'-DDE	µg/kg	440	416	140 - 534	Acceptable	EPA 8081A
7365	4,4'-DDT	µg/kg	170	194	43.4 - 270	Acceptable	EPA 8081A
7470	Dieldrin	µg/kg	230	230	67.8 - 282	Acceptable	EPA 8081A
7540	Endrin	µg/kg	190	219	80.5 - 278	Acceptable	EPA 8081A
7530	Endrin aldehyde	µg/kg	330	437	50.5 - 481	Acceptable	EPA 8081A
7535	Endrin ketone	µg/kg	380	408	95.9 - 511	Acceptable	EPA 8081A
7510	Endosulfan I	µg/kg	340	460	91.1 - 506	Acceptable	EPA 8081A
7515	Endosulfan II	µg/kg	170	223	42.1 - 245	Acceptable	EPA 8081A
7520	Endosulfan sulfate	µg/kg	350	366	74.4 - 488	Acceptable	EPA 8081A
7685	Heptachlor	µg/kg	210	209	57.6 - 267	Acceptable	EPA 8081A
7690	Heptachlor epoxide	µg/kg	470	474	149 - 558	Acceptable	EPA 8081A
7810	Methoxychlor	µg/kg	240	229	22.9 - 365	Acceptable	EPA 8081A
SOIL Chlordane in Soil							
7250	Chlordane, technical	µg/kg	480	658	136 - 900	Acceptable	EPA 8081
SOIL Toxaphene in Soil							
8250	Toxaphene	µg/kg	1400	1170	117 - 1780	Acceptable	EPA 8081

All analytes are included in ERA's A2LA accreditation. Lab Code: 1539-01

SOIL-64 Final Complete Report

Pinaki Banerjee
STAT Analysis Corp
2242 W Harrison Street
Suite 200
Chicago, IL 60612
(312) 563-0371

EPA ID: IL00086
ERA Customer Number: S744101
Report Issued: 12/23/08
Study Dates: 10/20/08 - 12/04/08

Anal. No.	Analyte	Units	Reported Value	Assigned Value	Acceptance Limits	Performance Evaluation	Method Description
SOIL Chlorinated Acid Herbicides in Soil							
8505	Acifluorfen	µg/kg	310	577	155 - 635	Acceptable	8321A
8530	Bentazon	µg/kg		624	0.00 - 958	Not Reported	
8540	Chloramben	µg/kg	< 3.3	362	0.00 - 439	Acceptable	8321A
8545	2,4-D	µg/kg	210	374	37.4 - 417	Acceptable	8321A
8560	2,4-DB	µg/kg	430	784	0.00 - 1100	Acceptable	8321A
8550	Dacthal diacid (DCPA)	µg/kg		725	0.00 - 1120	Not Reported	
8555	Dalapon	µg/kg	< 33	0.00		Acceptable	8321A
8595	Dicamba	µg/kg	560	783	86.3 - 937	Acceptable	8321A
8600	3,5-Dichlorobenzoic acid	µg/kg	530	579	0.00 - 865	Acceptable	8321A
8605	Dichlorprop	µg/kg	580	740	4.74 - 935	Acceptable	8321A
8620	Dinoseb	µg/kg	460	359	0.00 - 572	Acceptable	8321A
7775	MCPA	µg/kg	< 3.3	0.00		Acceptable	8321A
7780	MCPP	µg/kg	< 6.7	0.00		Acceptable	8321A
6500	4-Nitrophenol	µg/kg	450	470	17.0 - 620	Acceptable	8321A
6605	Pentachlorophenol	µg/kg	730	890	147 - 1000	Acceptable	8321A
8645	Picloram	µg/kg	< 6.7	367	0.00 - 404	Acceptable	8321A
8655	2,4,5-T	µg/kg	290	442	44.2 - 590	Acceptable	8321A
8650	2,4,5-TP (Silvex)	µg/kg	480	623	62.3 - 968	Acceptable	8321A
SOIL PCBs in Soil							
8880	Aroclor 1016	mg/kg	< 0.08	0.00		Acceptable	EPA 8082
8885	Aroclor 1221	mg/kg	< 0.08	0.00		Acceptable	EPA 8082
8890	Aroclor 1232	mg/kg	< 0.08	0.00		Acceptable	EPA 8082
8895	Aroclor 1242	mg/kg	< 0.08	0.00		Acceptable	EPA 8082
8900	Aroclor 1248	mg/kg	< 0.08	0.00		Acceptable	EPA 8082
8905	Aroclor 1254	mg/kg	4.3	7.57	1.63 - 10.5	Acceptable	EPA 8082
8910	Aroclor 1260	mg/kg	< 0.08	0.00		Acceptable	EPA 8082
SOIL Gasoline Range Organics (GRO) in Soil							
9408	Gasoline Range Organics (GRO)	mg/kg	950	1320	257 - 1980	Acceptable	EPA 8015
4375	Benzene in GRO	mg/kg		10.7	0.00 - 11.8	Not Reported	
4765	Ethylbenzene in GRO	mg/kg		54.8	20.4 - 61.5	Not Reported	
5140	Toluene in GRO	mg/kg		210	15.2 - 231	Not Reported	
5260	Xylenes, total in GRO	mg/kg		304	106 - 355	Not Reported	
SOIL Diesel Range Organics (DRO) in Soil							
9369	Diesel Range Organics (DRO)	mg/kg	1800	2430	800 - 3020	Acceptable	EPA 8015

All analytes are included in ERA's A2LA accreditation. Lab Code: 1539-01

APPENDIX C

EMPIRICAL LABORATORIES CERTIFICATION LETTER, LABORATORY SPECIFICATIONS, AND STANDARD OPERATING PROCEDURES

EMPIRICAL LABORATORIES CERTIFICATION LETTER

State of New Jersey
Department of Environmental Protection

Certifies That

Empirical Laboratories, LLC

Laboratory Certification ID # TN473

having duly met the requirements of the

Regulations Governing The Certification Of
Laboratories And Environmental Measurements N.J.A.C. 7:18 et. seq.

and

having been found compliant with the standards approved by the

The NELAC Institute

is hereby approved as a

Nationally Accredited Environmental Laboratory

to perform the analyses as indicated on the Annual Certified Parameter List
which must accompany this certificate to be valid

Expiration Date June 30, 2010

Debra Walker for JA

Joseph F. Aiello, Chief
Office of Quality Assurance

NJDEP is a NELAP Recognized Accrediting Authority

This certificate is to be conspicuously displayed at the laboratory with the annual certified parameter list in a location on the premises visible to the public.
Consumers are urged to verify the laboratory's current accreditation status with the State of NJ, NELAP.

State of New Jersey

JON S. CORZINE
Governor

DEPARTMENT OF ENVIRONMENTAL PROTECTION

Office of Quality Assurance
401 East State Street, 2nd Floor, P.O. Box 424
Trenton, New Jersey 08625
Tel: (609) 292-3950
Fax: (609) 777-1774

Mark Mauriello
Acting Commissioner

August 4, 2009

Randy Ward
Empirical Laboratories, LLC
621 Mainstream Drive, Suite 270
Nashville, TN 37228

Dear Mr. Ward:

Re: Accreditation Status Modification Request
Laboratory Certification ID# TN473

Based on your request for certification for the parameter(s) listed below and a review of your supporting documentation, enclosed is an updated annual certified parameter list (ACPL). This will replace the current ACPL your laboratory holds. Please review it carefully and notify this office immediately if any discrepancies are noted.

Parameter Code	Parameter	Method	Status
SHW04.05000	Aluminum	SW-846 6010C	Certified
SHW04.06500	Antimony	SW-846 6010C	Certified
SHW04.09000	Arsenic	SW-846 6010C	Certified
SHW04.11500	Barium	SW-846 6010C	Certified
SHW04.13500	Beryllium	SW-846 6010C	Certified
SHW04.15500	Cadmium	SW-846 6010C	Certified
SHW04.17500	Calcium	SW-846 6010C	Certified
SHW04.18500	Chromium	SW-846 6010C	Certified
SHW04.22500	Cobalt	SW-846 6010C	Certified
SHW04.24500	Copper	SW-846 6010C	Certified
SHW04.26000	Iron	SW-846 6010C	Certified
SHW04.27500	Lead	SW-846 6010C	Certified
SHW04.30500	Magnesium	SW-846 6010C	Certified
SHW04.31500	Manganese	SW-846 6010C	Certified
SHW04.33500	Mercury - solid waste	SW-846 7471B	Certified
SHW04.34000	Molybdenum	SW-846 6010C	Certified
SHW04.35500	Nickel	SW-846 6010C	Certified
SHW04.38000	Potassium	SW-846 6010C	Certified
SHW04.39000	Selenium	SW-846 6010C	Certified
SHW04.41000	Silver	SW-846 6010C	Certified

Parameter Code	Parameter	Method	Status
SHW04.43000	Sodium	SW-846 6010C	Certified
SHW04.45000	Thallium	SW-846 6010C	Certified
SHW04.47100	Tin	SW-846 6010C	Certified
SHW04.47500	Vanadium	SW-846 6010C	Certified
SHW04.49000	Zinc	SW-846 6010C	Certified
SHW06.04010	Gasoline range organic	SW-846 8015C	Certified
SHW06.04500	Diesel range organic	SW-846 8015C	Certified
SHW07.04665	Acetophenone	SW-846 8270D	Certified
SHW07.04670	Acetylaminofluorene (2-)	SW-846 8270D	Certified
SHW07.04675	Aminobiphenyl (4-)	SW-846 8270D	Certified
SHW07.04680	Aramite	SW-846 8270D	Certified
SHW07.04705	Chlorobenzilate	SW-846 8270D	Certified
SHW07.04715	Diallate (cis)	SW-846 8270D	Certified
SHW07.04720	Diallate (trans)	SW-846 8270D	Certified
SHW07.04755	Dichlorophenol (2,6-)	SW-846 8270D	Certified
SHW07.04760	Dimethoate	SW-846 8270D	Certified
SHW07.04767	Dimethylaminoazobenzene	SW-846 8270D	Certified
SHW07.04770	Dimethylbenz(a)anthracene (7,12-)	SW-846 8270D	Certified
SHW07.04775	Dimethyl benzidine (3,3-)	SW-846 8270D	Certified
SHW07.04780	Dinitrobenzene (1,3-)	SW-846 8270D	Certified
SHW07.04785	Dinoseb	SW-846 8270D	Certified
SHW07.04790	Disulfoton	SW-846 8270D	Certified
SHW07.04795	Famphur	SW-846 8270D	Certified
SHW07.04800	Hexachlorophene	SW-846 8270D	Certified
SHW07.04810	Isodrin	SW-846 8270D	Certified
SHW07.04815	Isosafrole (cis-)	SW-846 8270D	Certified
SHW07.04820	Isosafrole (trans-)	SW-846 8270D	Certified
SHW07.04825	Kepone	SW-846 8270D	Certified
SHW07.04830	Methanesulfonate (Ethyl-)	SW-846 8270D	Certified
SHW07.04835	Methanesulfonate (Methyl-)	SW-846 8270D	Certified
SHW07.04840	Methapyrilene	SW-846 8270D	Certified
SHW07.04845	Methylcholanthrene (3-)	SW-846 8270D	Certified
SHW07.04850	Napthoquinone (1,4-)	SW-846 8270D	Certified
SHW07.04855	Napththylamine (1-)	SW-846 8270D	Certified
SHW07.04860	Napththylamine (2-)	SW-846 8270D	Certified
SHW07.04870	N-Nitroso-di-n-butylamine	SW-846 8270D	Certified
SHW07.04875	N-Nitrosomorpholine	SW-846 8270D	Certified
SHW07.04880	N-Nitrosopiperidine	SW-846 8270D	Certified
SHW07.04885	Parathion	SW-846 8270D	Certified
SHW07.04890	Parathion methyl	SW-846 8270D	Certified
SHW07.04895	Pentachlorobenzene	SW-846 8270D	Certified
SHW07.04900	Pentachloroethane	SW-846 8270D	Certified
SHW07.04905	Pentachloronitrobenzene	SW-846 8270D	Certified
SHW07.04910	Phenacetin	SW-846 8270D	Certified
SHW07.04915	Phenylenediamine (1,4-)	SW-846 8270D	Certified

Parameter Code	Parameter	Method	Status
SHW07.04920	Phenylethylamine (alpha, alpha-Dimethyl)	SW-846 8270D	Certified
SHW07.04925	Phorate	SW-846 8270D	Certified
SHW07.04930	Phosphorothioate (O,O,O-triethyl)	SW-846 8270D	Certified
SHW07.04935	Phosphorothioate (O,O-diethyl-O-2-pyrazinyl) [Thionazin]	SW-846 8270D	Certified
SHW07.04940	Picoline (2-)	SW-846 8270D	Certified
SHW07.04945	Pronamide	SW-846 8270D	Certified
SHW07.04950	Quinoline -1-Oxide (4-Nitro)	SW-846 8270D	Certified
SHW07.04955	Safrole	SW-846 8270D	Certified
SHW07.04960	Sulfotepp	SW-846 8270D	Certified
SHW07.04975	Tetrachlorobenzene (1,2,4,5-)	SW-846 8270D	Certified
SHW07.04980	Tetrachlorophenol (2,3,4,6-)	SW-846 8270D	Certified
SHW07.04985	Toluidine (2-) (2-Methylaniline)	SW-846 8270D	Certified
SHW07.04990	Toluidine (5-Nitro-2-)	SW-846 8270D	Certified
SHW07.04995	Trinitrobenzene (1,3,5-)	SW-846 8270D	Certified
SHW07.05004	N-Nitrosodiethylamine	SW-846 8270D	Certified
SHW07.05005	N-Nitrosodimethylamine	SW-846 8270D	Certified
SHW07.05006	N-Nitroso-di-n-propylamine	SW-846 8270D	Certified
SHW07.05010	N-Nitrosodiphenylamine	SW-846 8270D	Certified
SHW07.05011	N-Nitrosomethylethylamine	SW-846 8270D	Certified
SHW07.05012	N-Nitrosopyrrolidine	SW-846 8270D	Certified
SHW07.05020	Diphenylamine	SW-846 8270D	Certified
SHW07.05030	Carbazole	SW-846 8270D	Certified
SHW07.05040	Dichlorobenzidine (3,3'-)	SW-846 8270D	Certified
SHW07.05048	Aniline	SW-846 8270D	Certified
SHW07.05050	Chloraniline (4-)	SW-846 8270D	Certified
SHW07.05060	Nitroaniline (2-)	SW-846 8270D	Certified
SHW07.05062	Nitroaniline (3-)	SW-846 8270D	Certified
SHW07.05063	Nitroaniline (4-)	SW-846 8270D	Certified
SHW07.05070	Chloronaphthalene (2-)	SW-846 8270D	Certified
SHW07.05080	Hexachlorobenzene	SW-846 8270D	Certified
SHW07.05090	Hexachlorobutadiene (1,3-)	SW-846 8270D	Certified
SHW07.05100	Hexachlorocyclopentadiene	SW-846 8270D	Certified
SHW07.05110	Hexachloroethane	SW-846 8270D	Certified
SHW07.05115	Hexachloropropene	SW-846 8270D	Certified
SHW07.05120	Trichlorobenzene (1,2,4-)	SW-846 8270D	Certified
SHW07.05130	Bis (2-chloroethoxy) methane	SW-846 8270D	Certified
SHW07.05132	Bis (2-chloroethyl) ether	SW-846 8270D	Certified
SHW07.05140	Bis (2-chloroisopropyl) ether	SW-846 8270D	Certified
SHW07.05150	Chlorophenyl-phenyl ether (4-)	SW-846 8270D	Certified
SHW07.05160	Bromophenyl-phenyl ether (4-)	SW-846 8270D	Certified
SHW07.05170	Dinitrotoluene (2,4-)	SW-846 8270D	Certified
SHW07.05180	Dinitrotoluene (2,6-)	SW-846 8270D	Certified
SHW07.05190	Isophorone	SW-846 8270D	Certified
SHW07.05200	Nitrobenzene	SW-846 8270D	Certified
SHW07.05210	Butyl benzyl phthalate	SW-846 8270D	Certified

Parameter Code	Parameter	Method	Status
SHW07.05220	Bis (2-ethylhexyl) phthalate	SW-846 8270D	Certified
SHW07.05230	Diethyl phthalate	SW-846 8270D	Certified
SHW07.05240	Dimethyl phthalate	SW-846 8270D	Certified
SHW07.05250	Di-n-butyl phthalate	SW-846 8270D	Certified
SHW07.05260	Di-n-octyl phthalate	SW-846 8270D	Certified
SHW07.05270	Acenaphthene	SW-846 8270D	Certified
SHW07.05280	Anthracene	SW-846 8270D	Certified
SHW07.05290	Acenaphthylene	SW-846 8270D	Certified
SHW07.05300	Benzo(a)anthracene	SW-846 8270D	Certified
SHW07.05310	Benzo(a)pyrene	SW-846 8270D	Certified
SHW07.05320	Benzo(b)fluoranthene	SW-846 8270D	Certified
SHW07.05330	Benzo(ghi)perylene	SW-846 8270D	Certified
SHW07.05340	Benzo(k)fluoranthene	SW-846 8270D	Certified
SHW07.05350	Chrysene	SW-846 8270D	Certified
SHW07.05360	Dibenzo(a,h)anthracene	SW-846 8270D	Certified
SHW07.05370	Fluoranthene	SW-846 8270D	Certified
SHW07.05380	Fluorene	SW-846 8270D	Certified
SHW07.05390	Indeno(1,2,3-cd)pyrene	SW-846 8270D	Certified
SHW07.05400	Methylnaphthalene (2-)	SW-846 8270D	Certified
SHW07.05410	Naphthalene	SW-846 8270D	Certified
SHW07.05420	Phenanthrene	SW-846 8270D	Certified
SHW07.05430	Pyrene	SW-846 8270D	Certified
SHW07.05440	Methyl phenol (4-chloro-3-)	SW-846 8270D	Certified
SHW07.05450	Chlorophenol (2-)	SW-846 8270D	Certified
SHW07.05460	Dichlorophenol (2,4-)	SW-846 8270D	Certified
SHW07.05470	Dimethylphenol (2,4-)	SW-846 8270D	Certified
SHW07.05480	Dinitrophenol (2,4-)	SW-846 8270D	Certified
SHW07.05490	Dinitrophenol (2-methyl-4,6-)	SW-846 8270D	Certified
SHW07.05500	Methylphenol (2-)	SW-846 8270D	Certified
SHW07.05510	Methylphenol (4-)	SW-846 8270D	Certified
SHW07.05520	Nitrophenol (2-)	SW-846 8270D	Certified
SHW07.05530	Nitrophenol (4-)	SW-846 8270D	Certified
SHW07.05540	Pentachlorophenol	SW-846 8270D	Certified
SHW07.05550	Phenol	SW-846 8270D	Certified
SHW07.05560	Trichlorophenol (2,4,5-)	SW-846 8270D	Certified
SHW07.05570	Trichlorophenol (2,4,6-)	SW-846 8270D	Certified
SHW07.05590	Methylphenol (3-)	SW-846 8270D	Certified
SHW07.05600	Dibenzofuran	SW-846 8270D	Certified
SHW07.05691	Dichlorobenzene (1,2-)	SW-846 8270D	Certified
SHW07.05692	Dichlorobenzene (1,3-)	SW-846 8270D	Certified
SHW07.05700	Dichlorobenzene (1,4-)	SW-846 8270D	Certified
SHW07.05720	Benzyl alcohol	SW-846 8270D	Certified
SHW07.05750	Pyridine	SW-846 8270D	Certified
SHW09.19000	Total organic carbon (TOC)	SW-846 9060A	Certified

If this office can be of any further assistance, please call Amy Bowman or me at (609) 292-3950.

Sincerely,

Joseph F. Aiello, Chief

Enclosure
C: File

New Jersey Department of Environmental Protection

National Environmental Laboratory Accreditation Program

ANNUAL CERTIFIED PARAMETER LIST AND CURRENT STATUS

Effective as of 08/03/2009 until 06/30/2010

Laboratory Name: EMPIRICAL LABORATORIES, LLC Laboratory Number: TN473 Activity ID: NLC090002
621 MAINSTREAM DR
STE 270
NASHVILLE, TN 37228

Category: SHW04 -- Inorganic Parameters

Status	Eligible to Report NJ Data	State	Code	Matrix	Technique Description	Approved Method	Parameter Description
Certified	Yes	NJ	SHW04.01000	NPW	Acid Digestion/Surface and Groundwater, ICP, FLAA	[SW-846 3005A, Rev. 1, 7/92]	Metals, Total Rec and Dissolved
Certified	Yes	NJ	SHW04.01500	NPW	Acid Digestion/Aqueous Samples, ICP, FLAA	[SW-846 3010A, Rev. 1, 7/92]	Metals, Total
Certified	Yes	NJ	SHW04.33000	NPW	AA, Manual Cold Vapor	[SW-846 7470A, Rev. 1, 9/94]	Mercury - liquid waste

Category: SHW05 -- Organic Parameters, Prep. / Screening

Status	Eligible to Report NJ Data	State	Code	Matrix	Technique Description	Approved Method	Parameter Description
Certified	Yes	NJ	SHW05.01000	NPW	Separatory Funnel Extraction	[SW-846 3510C, Rev. 3, 12/96]	Semivolatile organics
Certified	Yes	NJ	SHW05.02000	NPW	Continuous Liquid-Liquid Extraction	[SW-846 3520C, Rev. 3, 12/96]	Semivolatile organics
Certified	Yes	NJ	SHW05.02100	NPW	Solid Phase Extraction (SPE)	[SW-846 3535, Rev. 0, 12/96]	Semivolatile organics
Certified	Yes	NJ	SHW05.07000	NPW	Purge & Trap Aqueous	[SW-846 5030B, Rev. 2, 12/96]	Volatile organics

Category: WPP02 -- Inorg. Parameters, Nutrients and Demands

Status	Eligible to Report NJ Data	State	Code	Matrix	Technique Description	Approved Method	Parameter Description
Certified	Yes	NJ	WPP02.01500	NPW	Electrometric or Color Titration	[SM 2320 B]	Alkalinity as CaCO3
Applied	No	NJ	WPP02.02000	NPW	Automated Titration	[EPA 310.2]	Alkalinity as CaCO3
Applied	No	NJ	WPP02.03500	NPW	Distillation, Electrode	[SM 4500-NH3 B+D or E (19/20th ed.)]	Ammonia
Certified	Yes	NJ	WPP02.04000	NPW	Automated Phenate	[SM 4500-NH3 B+G (20th ed.)]	Ammonia
Certified	Yes	NJ	WPP02.05000	NPW	Dissolved Oxygen Depletion	[SM 5210 B]	Biochemical oxygen demand
Certified	Yes	NJ	WPP02.09500	NPW	Dissolved Oxygen Depletion, Nitrification Inhibition	[SM 5210 B]	Carbonaceous BOD (CBOD)
Certified	Yes	NJ	WPP02.10500	NPW	Spectrophotometric Manual/Auto	[EPA 410.4]	Chemical oxygen demand
Certified	Yes	NJ	WPP02.12600	NPW	Ion Chromatography	[EPA 300.0]	Chloride
Certified	Yes	NJ	WPP02.15500	NPW	Distillation, Spectrophotometric (Auto)	[EPA 335.4]	Cyanide
Certified	Yes	NJ	WPP02.16000	NPW	Manual Distillation, Titrimetr/Spectro	[SM 4500-CN C,G]	Cyanide - amenable to Cl2
Certified	Yes	NJ	WPP02.18100	NPW	Ion Chromatography	[EPA 300.0]	Fluoride
Certified	Yes	NJ	WPP02.20100	NPW	Ca + Mg Carbonates, ICP	[EPA 200.7]	Hardness - total as CaCO3
Certified	Yes	NJ	WPP02.22500	NPW	Digestion, Distillation, Semiautomated Digestor	[EPA 351.2]	Kjeldahl nitrogen - total

KEY: AE = Air and Emissions, BT = Biological Tissues, DW = Drinking Water, NPW = Non-Potable Water, SCM = Solid and Chemical Materials

ANNUAL CERTIFIED PARAMETER LIST AND CURRENT STATUS

Effective as of 08/03/2009 until 06/30/2010

Laboratory Name: EMPIRICAL LABORATORIES, LLC Laboratory Number: TN473 Activity ID: NLC090002
621 MAINSTREAM DR
STE 270
NASHVILLE, TN 37228

Category: WPP02 -- Inorg. Parameters, Nutrients and Demands

Status	Eligible to Report NJ Data	State	Code	Matrix	Technique Description	Approved Method	Parameter Description
Certified	Yes	NJ	WPP02.24000	NPW	Digestion, ICP	[EPA 200.7]	Magnesium
Certified	Yes	NJ	WPP02.26100	NPW	Ion Chromatography	[EPA 300.0]	Nitrate
Certified	Yes	NJ	WPP02.27000	NPW	Cadmium Reduction, Automated	[EPA 353.2]	Nitrate - nitrite
Applied	No	NJ	WPP02.28000	NPW	Spectrophotometric, Manual	[SM 4500-NO2 B]	Nitrite
Certified	Yes	NJ	WPP02.28600	NPW	Ion Chromatography	[EPA 300.0]	Nitrite
Certified	Yes	NJ	WPP02.29100	NPW	Gravimetric, Hexane Extractable Material-LL	[EPA 1664A]	Oil & grease - hem-LL
Certified	Yes	NJ	WPP02.30000	NPW	Combustion or Oxidation	[SM 5310 B, C or D]	Total organic carbon (TOC)
Certified	Yes	NJ	WPP02.31500	NPW	Ascorbic Acid, Manual Single Reagent	[SM 4500-P, E]	Orthophosphate
Certified	Yes	NJ	WPP02.32500	NPW	Manual Distillation, Colorimetric 4AAP	[EPA 420.1]	Phenols
Certified	Yes	NJ	WPP02.33000	NPW	Manual Distillation, Colorimetric Auto	[EPA 420.1 + .2]	Phenols
Certified	Yes	NJ	WPP02.34000	NPW	Persulfate Digestion + Manual	[SM 4500-P B5 + E]	Phosphorus (total)
Certified	Yes	NJ	WPP02.38000	NPW	Gravimetric, 103-105 Degrees C	[SM 2540 B]	Residue - total
Certified	Yes	NJ	WPP02.38500	NPW	Gravimetric, 180 Degrees C	[SM 2540 C]	Residue - filterable (TDS)
Certified	Yes	NJ	WPP02.39000	NPW	Gravimetric, 103-105 Degrees C, Post Washing	[SM 2540 D]	Residue - nonfilterable (TSS)
Certified	Yes	NJ	WPP02.44000	NPW	Digestion, ICP	[EPA 200.7]	Sodium
Certified	Yes	NJ	WPP02.45500	NPW	Wheatstone Bridge	[EPA 120.1]	Specific conductance
Certified	Yes	NJ	WPP02.47100	NPW	Ion Chromatography	[EPA 300.0]	Sulfate
Certified	Yes	NJ	WPP02.47500	NPW	Titrimetric, Iodine	[SM 4500-S E or F]	Sulfides
Certified	Yes	NJ	WPP02.50000	NPW	Nephelometric	[EPA 180.1]	Turbidity

Category: WPP03 -- Analyze-Immediately Inorganic Parameters

Status	Eligible to Report NJ Data	State	Code	Matrix	Technique Description	Approved Method	Parameter Description
Certified	Yes	NJ	WPP03.09000	NPW	Electrometric	[SM 4500-H B]	pH

Category: WPP04 -- Inorganic Parameters, Metals

Status	Eligible to Report NJ Data	State	Code	Matrix	Technique Description	Approved Method	Parameter Description
Certified	Yes	NJ	WPP04.02000	NPW	Digestion, ICP	[EPA 200.7]	Aluminum

KEY: AE = Air and Emissions, BT = Biological Tissues, DW = Drinking Water, NPW = Non-Potable Water, SCM = Solid and Chemical Materials

New Jersey Department of Environmental Protection

National Environmental Laboratory Accreditation Program

ANNUAL CERTIFIED PARAMETER LIST AND CURRENT STATUS

Effective as of 08/03/2009 until 06/30/2010

Laboratory Name: EMPIRICAL LABORATORIES, LLC Laboratory Number: TN473 Activity ID: NLC090002
621 MAINSTREAM DR
STE 270
NASHVILLE, TN 37228

Category: WPP04 -- Inorganic Parameters, Metals

Status	Eligible to Report NJ Data	State	Code	Matrix	Technique Description	Approved Method	Parameter Description
Certified	Yes	NJ	WPP04.04500	NPW	Digestion, ICP	[EPA 200.7]	Antimony
Certified	Yes	NJ	WPP04.05600	NPW	Digestion, ICP	[EPA 200.7]	Arsenic
Certified	Yes	NJ	WPP04.08000	NPW	Digestion, ICP	[EPA 200.7]	Barium
Certified	Yes	NJ	WPP04.11000	NPW	Digestion, ICP	[EPA 200.7]	Beryllium
Certified	Yes	NJ	WPP04.13500	NPW	Digestion, ICP	[EPA 200.7]	Cadmium
Certified	Yes	NJ	WPP04.15000	NPW	0.45u Filter, Colorimetric DPC	[SM 3500-Cr D]	Chromium (VI)
Certified	Yes	NJ	WPP04.18000	NPW	Digestion, ICP	[EPA 200.7]	Chromium
Certified	Yes	NJ	WPP04.19500	NPW	Digestion, ICP	[EPA 200.7]	Cobalt
Certified	Yes	NJ	WPP04.21500	NPW	Digestion, ICP	[EPA 200.7]	Copper
Certified	Yes	NJ	WPP04.26500	NPW	Digestion, ICP	[EPA 200.7]	Iron
Certified	Yes	NJ	WPP04.28000	NPW	Digestion, ICP	[EPA 200.7]	Lead
Certified	Yes	NJ	WPP04.31000	NPW	Digestion, ICP	[EPA 200.7]	Manganese
Certified	Yes	NJ	WPP04.33000	NPW	Manual Cold Vapor	[EPA 245.1]	Mercury
Certified	Yes	NJ	WPP04.35000	NPW	Digestion, ICP	[EPA 200.7]	Molybdenum
Certified	Yes	NJ	WPP04.37500	NPW	Digestion, ICP	[EPA 200.7]	Nickel
Certified	Yes	NJ	WPP04.45500	NPW	Digestion, ICP	[EPA 200.7]	Selenium
Certified	Yes	NJ	WPP04.48000	NPW	Digestion, ICP	[EPA 200.7]	Silver
Certified	Yes	NJ	WPP04.50000	NPW	Digestion, ICP	[EPA 200.7]	Thallium
Certified	Yes	NJ	WPP04.51100	NPW	Digestion, ICP	[EPA 200.7]	Tin
Certified	Yes	NJ	WPP04.54000	NPW	Digestion, ICP	[EPA 200.7]	Vanadium
Certified	Yes	NJ	WPP04.56500	NPW	Digestion, ICP	[EPA 200.7]	Zinc

Category: WPP05 -- Organic Parameters, Chromatography

Status	Eligible to Report NJ Data	State	Code	Matrix	Technique Description	Approved Method	Parameter Description
Certified	Yes	NJ	WPP05.09010	NPW	Extract/GC (ECD)	[EPA 608]	Aldrin
Certified	Yes	NJ	WPP05.09020	NPW	Extract/GC (ECD)	[EPA 608]	Alpha BHC
Certified	Yes	NJ	WPP05.09030	NPW	Extract/GC (ECD)	[EPA 608]	Beta BHC
Certified	Yes	NJ	WPP05.09040	NPW	Extract/GC (ECD)	[EPA 608]	Delta BHC
Certified	Yes	NJ	WPP05.09050	NPW	Extract/GC (ECD)	[EPA 608]	Lindane (gamma BHC)

KEY: AE = Air and Emissions, BT = Biological Tissues, DW = Drinking Water, NPW = Non-Potable Water, SCM = Solid and Chemical Materials

ANNUAL CERTIFIED PARAMETER LIST AND CURRENT STATUS

Effective as of 08/03/2009 until 06/30/2010

Laboratory Name: EMPIRICAL LABORATORIES, LLC Laboratory Number: TN473 Activity ID: NLC090002
621 MAINSTREAM DR
STE 270
NASHVILLE, TN 37228

Category: WPP05 -- Organic Parameters, Chromatography

Status	Eligible to Report NJ Data	State	Code	Matrix	Technique Description	Approved Method	Parameter Description
Certified	Yes	NJ	WPP05.09060	NPW	Extract/GC (ECD)	[EPA 608]	Chlordane
Certified	Yes	NJ	WPP05.09070	NPW	Extract/GC (ECD)	[EPA 608]	DDD (4,4'-)
Certified	Yes	NJ	WPP05.09080	NPW	Extract/GC (ECD)	[EPA 608]	DDE (4,4'-)
Certified	Yes	NJ	WPP05.09090	NPW	Extract/GC (ECD)	[EPA 608]	DDT (4,4'-)
Certified	Yes	NJ	WPP05.09100	NPW	Extract/GC (ECD)	[EPA 608]	Dieldrin
Certified	Yes	NJ	WPP05.09110	NPW	Extract/GC (ECD)	[EPA 608]	Endosulfan I
Certified	Yes	NJ	WPP05.09120	NPW	Extract/GC (ECD)	[EPA 608]	Endosulfan II
Certified	Yes	NJ	WPP05.09130	NPW	Extract/GC (ECD)	[EPA 608]	Endosulfan sulfate
Certified	Yes	NJ	WPP05.09140	NPW	Extract/GC (ECD)	[EPA 608]	Endrin
Certified	Yes	NJ	WPP05.09150	NPW	Extract/GC (ECD)	[EPA 608]	Endrin aldehyde
Certified	Yes	NJ	WPP05.09160	NPW	Extract/GC (ECD)	[EPA 608]	Endrin ketone
Certified	Yes	NJ	WPP05.09170	NPW	Extract/GC (ECD)	[EPA 608]	Heptachlor
Certified	Yes	NJ	WPP05.09180	NPW	Extract/GC (ECD)	[EPA 608]	Heptachlor epoxide
Certified	Yes	NJ	WPP05.09190	NPW	Extract/GC (ECD)	[EPA 608]	Methoxychlor
Certified	Yes	NJ	WPP05.09200	NPW	Extract/GC (ECD)	[EPA 608]	Toxaphene
Certified	Yes	NJ	WPP05.11010	NPW	Extract/GC (ECD)	[EPA 608]	PCB 1016
Certified	Yes	NJ	WPP05.11020	NPW	Extract/GC (ECD)	[EPA 608]	PCB 1221
Certified	Yes	NJ	WPP05.11030	NPW	Extract/GC (ECD)	[EPA 608]	PCB 1232
Certified	Yes	NJ	WPP05.11040	NPW	Extract/GC (ECD)	[EPA 608]	PCB 1242
Certified	Yes	NJ	WPP05.11050	NPW	Extract/GC (ECD)	[EPA 608]	PCB 1248
Certified	Yes	NJ	WPP05.11060	NPW	Extract/GC (ECD)	[EPA 608]	PCB 1254
Certified	Yes	NJ	WPP05.11070	NPW	Extract/GC (ECD)	[EPA 608]	PCB 1260

Category: WPP06 -- Organic Parameters, Chromatography/MS

Status	Eligible to Report NJ Data	State	Code	Matrix	Technique Description	Approved Method	Parameter Description
Certified	Yes	NJ	WPP06.02010	NPW	GC/MS, P & T, Capillary Column	[EPA 624]	Benzene
Certified	Yes	NJ	WPP06.02020	NPW	GC/MS, P & T, Capillary Column	[EPA 624]	Bromodichloromethane
Certified	Yes	NJ	WPP06.02030	NPW	GC/MS, P & T, Capillary Column	[EPA 624]	Bromoform
Certified	Yes	NJ	WPP06.02040	NPW	GC/MS, P & T, Capillary Column	[EPA 624]	Bromomethane

KEY: AE = Air and Emissions, BT = Biological Tissues, DW = Drinking Water, NPW = Non-Potable Water, SCM = Solid and Chemical Materials

ANNUAL CERTIFIED PARAMETER LIST AND CURRENT STATUS

Effective as of 08/03/2009 until 06/30/2010

Laboratory Name: EMPIRICAL LABORATORIES, LLC Laboratory Number: TN473 Activity ID: NLC090002
621 MAINSTREAM DR
STE 270
NASHVILLE, TN 37228

Category: WPP06 -- Organic Parameters, Chromatography/MS

Status	Eligible to Report NJ Data	State	Code	Matrix	Technique Description	Approved Method	Parameter Description
Certified	Yes	NJ	WPP06.02050	NPW	GC/MS, P & T, Capillary Column	[EPA 624]	Carbon tetrachloride
Certified	Yes	NJ	WPP06.02060	NPW	GC/MS, P & T, Capillary Column	[EPA 624]	Chlorobenzene
Certified	Yes	NJ	WPP06.02070	NPW	GC/MS, P & T, Capillary Column	[EPA 624]	Chloroethane
Certified	Yes	NJ	WPP06.02080	NPW	GC/MS, P & T, Capillary Column	[EPA 624]	Chloroethyl vinyl ether (2-)
Certified	Yes	NJ	WPP06.02090	NPW	GC/MS, P & T, Capillary Column	[EPA 624]	Chloroform
Certified	Yes	NJ	WPP06.02100	NPW	GC/MS, P & T, Capillary Column	[EPA 624]	Chloromethane
Certified	Yes	NJ	WPP06.02110	NPW	GC/MS, P & T, Capillary Column	[EPA 624]	Dibromochloromethane
Certified	Yes	NJ	WPP06.02120	NPW	GC/MS, P & T, Capillary Column	[EPA 624]	Dichlorobenzene (1,2-)
Certified	Yes	NJ	WPP06.02130	NPW	GC/MS, P & T, Capillary Column	[EPA 624]	Dichlorobenzene (1,3-)
Certified	Yes	NJ	WPP06.02140	NPW	GC/MS, P & T, Capillary Column	[EPA 624]	Dichlorobenzene (1,4-)
Certified	Yes	NJ	WPP06.02150	NPW	GC/MS, P & T, Capillary Column	[EPA 624]	Dichloroethane (1,1-)
Certified	Yes	NJ	WPP06.02160	NPW	GC/MS, P & T, Capillary Column	[EPA 624]	Dichloroethane (1,2-)
Certified	Yes	NJ	WPP06.02170	NPW	GC/MS, P & T, Capillary Column	[EPA 624]	Dichloroethene (1,1-)
Certified	Yes	NJ	WPP06.02180	NPW	GC/MS, P & T, Capillary Column	[EPA 624]	Dichloroethene (trans-1,2-)
Certified	Yes	NJ	WPP06.02190	NPW	GC/MS, P & T, Capillary Column	[EPA 624]	Dichloropropane (1,2-)
Certified	Yes	NJ	WPP06.02200	NPW	GC/MS, P & T, Capillary Column	[EPA 624]	Dichloropropene (cis-1,3-)
Certified	Yes	NJ	WPP06.02210	NPW	GC/MS, P & T, Capillary Column	[EPA 624]	Dichloropropene (trans-1,3-)
Certified	Yes	NJ	WPP06.02220	NPW	GC/MS, P & T, Capillary Column	[EPA 624]	Ethylbenzene
Certified	Yes	NJ	WPP06.02230	NPW	GC/MS, P & T, Capillary Column	[EPA 624]	Methylene chloride (Dichloromethane)
Certified	Yes	NJ	WPP06.02232	NPW	GC/MS, P & T, Capillary Column	[EPA 624]	Methyl tert-butyl ether
Certified	Yes	NJ	WPP06.02234	NPW	GC/MS, P & T, Capillary Column	[EPA 624]	Tert-butyl alcohol
Certified	Yes	NJ	WPP06.02238	NPW	GC/MS, P & T, Capillary Column	[EPA 624]	Styrene
Certified	Yes	NJ	WPP06.02240	NPW	GC/MS, P & T, Capillary Column	[EPA 624]	Tetrachloroethane (1,1,2,2-)
Certified	Yes	NJ	WPP06.02250	NPW	GC/MS, P & T, Capillary Column	[EPA 624]	Tetrachloroethene
Certified	Yes	NJ	WPP06.02260	NPW	GC/MS, P & T, Capillary Column	[EPA 624]	Toluene
Certified	Yes	NJ	WPP06.02270	NPW	GC/MS, P & T, Capillary Column	[EPA 624]	Trichloroethane (1,1,1-)
Certified	Yes	NJ	WPP06.02280	NPW	GC/MS, P & T, Capillary Column	[EPA 624]	Trichloroethane (1,1,2-)
Certified	Yes	NJ	WPP06.02290	NPW	GC/MS, P & T, Capillary Column	[EPA 624]	Trichloroethene
Certified	Yes	NJ	WPP06.02300	NPW	GC/MS, P & T, Capillary Column	[EPA 624]	Trichlorofluoromethane
Certified	Yes	NJ	WPP06.02310	NPW	GC/MS, P & T, Capillary Column	[EPA 624]	Vinyl chloride
Certified	Yes	NJ	WPP06.02312	NPW	GC/MS, P & T, Capillary Column	[EPA 624]	Xylenes (total)
Certified	Yes	NJ	WPP06.03010	NPW	Extract, GC/MS	[EPA 625]	Acenaphthene

KEY: AE = Air and Emissions, BT = Biological Tissues, DW = Drinking Water, NPW = Non-Potable Water, SCM = Solid and Chemical Materials

New Jersey Department of Environmental Protection

National Environmental Laboratory Accreditation Program

ANNUAL CERTIFIED PARAMETER LIST AND CURRENT STATUS

Effective as of 08/03/2009 until 06/30/2010

Laboratory Name: EMPIRICAL LABORATORIES, LLC Laboratory Number: TN473 Activity ID: NLC090002
621 MAINSTREAM DR
STE 270
NASHVILLE, TN 37228

Category: WPP06 -- Organic Parameters, Chromatography/MS

Status	Eligible to Report NJ Data	State	Code	Matrix	Technique Description	Approved Method	Parameter Description
Certified	Yes	NJ	WPP06.03020	NPW	Extract, GC/MS	[EPA 625]	Acenaphthylene
Certified	Yes	NJ	WPP06.03030	NPW	Extract, GC/MS	[EPA 625]	Anthracene
Certified	Yes	NJ	WPP06.03040	NPW	Extract, GC/MS	[EPA 625]	Benzo(a)anthracene
Certified	Yes	NJ	WPP06.03050	NPW	Extract, GC/MS	[EPA 625]	Benzo(b)fluoranthene
Certified	Yes	NJ	WPP06.03060	NPW	Extract, GC/MS	[EPA 625]	Benzo(k)fluoranthene
Certified	Yes	NJ	WPP06.03070	NPW	Extract, GC/MS	[EPA 625]	Benzo(a)pyrene
Certified	Yes	NJ	WPP06.03080	NPW	Extract, GC/MS	[EPA 625]	Benzo(ghi)perylene
Certified	Yes	NJ	WPP06.03090	NPW	Extract, GC/MS	[EPA 625]	Butyl benzyl phthalate
Certified	Yes	NJ	WPP06.03100	NPW	Extract, GC/MS	[EPA 625]	Bis (2-chloroethyl) ether
Certified	Yes	NJ	WPP06.03110	NPW	Extract, GC/MS	[EPA 625]	Bis (2-chloroethoxy) methane
Certified	Yes	NJ	WPP06.03120	NPW	Extract, GC/MS	[EPA 625]	Bis (2-ethylhexyl) phthalate
Certified	Yes	NJ	WPP06.03130	NPW	Extract, GC/MS	[EPA 625]	Bis (2-chloroisopropyl) ether
Certified	Yes	NJ	WPP06.03140	NPW	Extract, GC/MS	[EPA 625]	Bromophenyl-phenyl ether (4-)
Certified	Yes	NJ	WPP06.03150	NPW	Extract, GC/MS	[EPA 625]	Chloronaphthalene (2-)
Certified	Yes	NJ	WPP06.03160	NPW	Extract, GC/MS	[EPA 625]	Chlorophenyl-phenyl ether (4-)
Certified	Yes	NJ	WPP06.03170	NPW	Extract, GC/MS	[EPA 625]	Chrysene
Certified	Yes	NJ	WPP06.03180	NPW	Extract, GC/MS	[EPA 625]	Dibenzo(a,h)anthracene
Certified	Yes	NJ	WPP06.03186	NPW	Extract, GC/MS	[EPA 625]	Dibenzofuran
Certified	Yes	NJ	WPP06.03190	NPW	Extract, GC/MS	[EPA 625]	Di-n-butyl phthalate
Certified	Yes	NJ	WPP06.03230	NPW	Extract, GC/MS	[EPA 625]	Dichlorobenzidine (3,3'-)
Certified	Yes	NJ	WPP06.03240	NPW	Extract, GC/MS	[EPA 625]	Diethyl phthalate
Certified	Yes	NJ	WPP06.03250	NPW	Extract, GC/MS	[EPA 625]	Dimethyl phthalate
Certified	Yes	NJ	WPP06.03260	NPW	Extract, GC/MS	[EPA 625]	Dinitrotoluene (2,4-)
Certified	Yes	NJ	WPP06.03270	NPW	Extract, GC/MS	[EPA 625]	Dinitrotoluene (2,6-)
Certified	Yes	NJ	WPP06.03280	NPW	Extract, GC/MS	[EPA 625]	Di-n-octyl phthalate
Certified	Yes	NJ	WPP06.03290	NPW	Extract, GC/MS	[EPA 625]	Fluoranthene
Certified	Yes	NJ	WPP06.03300	NPW	Extract, GC/MS	[EPA 625]	Fluorene
Certified	Yes	NJ	WPP06.03310	NPW	Extract, GC/MS	[EPA 625]	Hexachlorobenzene
Certified	Yes	NJ	WPP06.03320	NPW	Extract, GC/MS	[EPA 625]	Hexachlorobutadiene (1,3-)
Certified	Yes	NJ	WPP06.03330	NPW	Extract, GC/MS	[EPA 625]	Hexachloroethane
Certified	Yes	NJ	WPP06.03340	NPW	Extract, GC/MS	[EPA 625]	Indeno(1,2,3-cd)pyrene
Certified	Yes	NJ	WPP06.03350	NPW	Extract, GC/MS	[EPA 625]	Isophorone

KEY: AE = Air and Emissions, BT = Biological Tissues, DW = Drinking Water, NPW = Non-Potable Water, SCM = Solid and Chemical Materials

ANNUAL CERTIFIED PARAMETER LIST AND CURRENT STATUS

Effective as of 08/03/2009 until 06/30/2010

Laboratory Name: EMPIRICAL LABORATORIES, LLC Laboratory Number: TN473 Activity ID: NLC090002
621 MAINSTREAM DR
STE 270
NASHVILLE, TN 37228

Category: WPP06 -- Organic Parameters, Chromatography/MS

Status	Eligible to Report NJ Data	State	Code	Matrix	Technique Description	Approved Method	Parameter Description
Certified	Yes	NJ	WPP06.03358	NPW	Extract, GC/MS	[EPA 625]	Methylnaphthalene (2-)
Certified	Yes	NJ	WPP06.03360	NPW	Extract, GC/MS	[EPA 625]	Naphthalene
Certified	Yes	NJ	WPP06.03366	NPW	Extract, GC/MS	[EPA 625]	Chloroaniline (4-)
Certified	Yes	NJ	WPP06.03367	NPW	Extract, GC/MS	[EPA 625]	Nitroaniline (2-)
Certified	Yes	NJ	WPP06.03368	NPW	Extract, GC/MS	[EPA 625]	Nitroaniline (3-)
Certified	Yes	NJ	WPP06.03369	NPW	Extract, GC/MS	[EPA 625]	Nitroaniline (4-)
Certified	Yes	NJ	WPP06.03370	NPW	Extract, GC/MS	[EPA 625]	Nitrobenzene
Certified	Yes	NJ	WPP06.03380	NPW	Extract, GC/MS	[EPA 625]	N-Nitroso-di-n-propylamine
Certified	Yes	NJ	WPP06.03390	NPW	Extract, GC/MS	[EPA 625]	Phenanthrene
Certified	Yes	NJ	WPP06.03400	NPW	Extract, GC/MS	[EPA 625]	Pyrene
Certified	Yes	NJ	WPP06.03410	NPW	Extract, GC/MS	[EPA 625]	Trichlorobenzene (1,2,4-)
Certified	Yes	NJ	WPP06.03420	NPW	Extract, GC/MS	[EPA 625]	Methyl phenol (4-chloro-3-)
Certified	Yes	NJ	WPP06.03430	NPW	Extract, GC/MS	[EPA 625]	Chlorophenol (2-)
Certified	Yes	NJ	WPP06.03440	NPW	Extract, GC/MS	[EPA 625]	Dichlorophenol (2,4-)
Certified	Yes	NJ	WPP06.03450	NPW	Extract, GC/MS	[EPA 625]	Dimethylphenol (2,4-)
Certified	Yes	NJ	WPP06.03460	NPW	Extract, GC/MS	[EPA 625]	Dinitrophenol (2,4-)
Certified	Yes	NJ	WPP06.03470	NPW	Extract, GC/MS	[EPA 625]	Dinitrophenol (2-methyl-4,6-)
Certified	Yes	NJ	WPP06.03480	NPW	Extract, GC/MS	[EPA 625]	Nitrophenol (2-)
Certified	Yes	NJ	WPP06.03490	NPW	Extract, GC/MS	[EPA 625]	Nitrophenol (4-)
Certified	Yes	NJ	WPP06.03500	NPW	Extract, GC/MS	[EPA 625]	Pentachlorophenol
Certified	Yes	NJ	WPP06.03510	NPW	Extract, GC/MS	[EPA 625]	Phenol
Certified	Yes	NJ	WPP06.03518	NPW	Extract, GC/MS	[EPA 625]	Trichlorophenol (2,4,5-)
Certified	Yes	NJ	WPP06.03520	NPW	Extract, GC/MS	[EPA 625]	Trichlorophenol (2,4,6-)
Certified	Yes	NJ	WPP06.03530	NPW	Extract, GC/MS	[EPA 625]	Benzoic acid
Certified	Yes	NJ	WPP06.03540	NPW	Extract, GC/MS	[EPA 625]	Methylphenol (4-)
Certified	Yes	NJ	WPP06.03570	NPW	Extract, GC/MS	[EPA 625]	Aniline
Certified	Yes	NJ	WPP06.03580	NPW	Extract, GC/MS	[EPA 625]	Benzidine
Certified	Yes	NJ	WPP06.03590	NPW	Extract, GC/MS	[EPA 625]	Carbazole
Certified	Yes	NJ	WPP06.03610	NPW	Extract, GC/MS	[EPA 625]	Methylphenol (2-)
Certified	Yes	NJ	WPP06.03660	NPW	Extract, GC/MS	[EPA 625]	Hexachlorocyclopentadiene
Certified	Yes	NJ	WPP06.03680	NPW	Extract, GC/MS	[EPA 625]	N-Nitrosodimethylamine
Certified	Yes	NJ	WPP06.03690	NPW	Extract, GC/MS	[EPA 625]	N-Nitrosodiphenylamine

KEY: AE = Air and Emissions, BT = Biological Tissues, DW = Drinking Water, NPW = Non-Potable Water, SCM = Solid and Chemical Materials

ANNUAL CERTIFIED PARAMETER LIST AND CURRENT STATUS

Effective as of 08/03/2009 until 06/30/2010

Laboratory Name: EMPIRICAL LABORATORIES, LLC Laboratory Number: TN473 Activity ID: NLC090002
621 MAINSTREAM DR
STE 270
NASHVILLE, TN 37228

Category: WPP06 -- Organic Parameters, Chromatography/MS

Status	Eligible to Report NJ Data	State	Code	Matrix	Technique Description	Approved Method	Parameter Description
Certified	Yes	NJ	WPP06.03720	NPW	Extract, GC/MS	[EPA 625]	Pyridine

Category: WPP08 -- Acute Toxicity Parameters

Status	Eligible to Report NJ Data	State	Code	Matrix	Technique Description	Approved Method	Parameter Description
Certified	Yes	NJ	WPP08.01010	NPW	Daphnia SPP. Mortality	[EPA 2021.0] [OTHER N.J.A.C. 7:18]	Toxicity - acute, FW organism
Certified	Yes	NJ	WPP08.01020	NPW	Ceriodaphnia Mortality	[EPA 2002.0] [OTHER N.J.A.C. 7:18]	Toxicity - acute, FW organism
Certified	Yes	NJ	WPP08.01030	NPW	Fathead Minnow (FHM) Mortality	[OTHER N.J.A.C. 7:18] [EPA 2000.0]	Toxicity - acute, FW organism
Certified	Yes	NJ	WPP08.01060	NPW	Bannerfish Shiner Mortality	[OTHER N.J.A.C. 7:18] [EPA 2000.0]	Toxicity - acute, FW organism
Certified	Yes	NJ	WPP08.01070	NPW	Mysid Mortality	[EPA 2007.0] [OTHER N.J.A.C. 7:18]	Toxicity - acute, estuary and marine organism
Certified	Yes	NJ	WPP08.01080	NPW	Sheephead Minnow (SHM) Mortality	[EPA 2004.0] [OTHER N.J.A.C. 7:18]	Toxicity - acute, estuary and marine organism
Certified	Yes	NJ	WPP08.01090	NPW	Menidia SPP Mortality	[EPA 2006.0] [OTHER N.J.A.C. 7:18]	Toxicity - acute, estuary and marine organism
Certified	Yes	NJ	WPP08.02010	NPW	FHM Larval Survival & Growth	[EPA 1000.0]	Toxicity - chronic, FW organism
Certified	Yes	NJ	WPP08.02030	NPW	Ceriodaphnia Survival & Reproduction	[EPA 1002.0]	Toxicity - chronic, FW organism
Applied	No	NJ	WPP08.03060	NPW	Champia Parvula Reproduction	[EPA 1009.0]	Toxicity - chronic, estuary & marine organism

Category: SHW02 -- Characteristics of Hazardous Waste

Status	Eligible to Report NJ Data	State	Code	Matrix	Technique Description	Approved Method	Parameter Description
Certified	Yes	NJ	SHW02.01000	NPW, SCM	Pensky Martens	[SW-846 1010A]	Ignitability
Certified	Yes	NJ	SHW02.03000	NPW, SCM	Aqueous Waste, Potentiometric	[SW-846 9040B, Rev. 2, 1/95]	Corrosivity - pH waste, >20% water
Certified	Yes	NJ	SHW02.04000	NPW, SCM	Weight Loss In Acid Media	[SW-846 1110, Rev. 0, 9/86]	Corrosivity toward steel
Certified	Yes	NJ	SHW02.06900	NPW, SCM	TCLP, Toxicity Procedure, ZHE	[SW-846 1311, Rev. 0, 7/92]	Volatile organics
Certified	Yes	NJ	SHW02.07000	NPW, SCM	TCLP, Toxicity Procedure, Shaker	[SW-846 1311, Rev. 0, 7/92]	Metals
Certified	Yes	NJ	SHW02.08000	NPW, SCM	Synthetic PPT Leachate Procedure	[SW-846 1312, Rev. 0, 9/94]	Metals - organics

KEY: AE = Air and Emissions, BT = Biological Tissues, DW = Drinking Water, NPW = Non-Potable Water, SCM = Solid and Chemical Materials

New Jersey Department of Environmental Protection

National Environmental Laboratory Accreditation Program

ANNUAL CERTIFIED PARAMETER LIST AND CURRENT STATUS

Effective as of 08/03/2009 until 06/30/2010

Laboratory Name: EMPIRICAL LABORATORIES, LLC Laboratory Number: TN473 Activity ID: NLC090002
621 MAINSTREAM DR
STE 270
NASHVILLE, TN 37228

Category: SHW04 -- Inorganic Parameters

Status	Eligible to Report NJ Data	State	Code	Matrix	Technique Description	Approved Method	Parameter Description
Certified	Yes	NJ	SHW04.05000	NPW, SCM	ICP	[SW-846 6010B] [SW-846 6010C]	Aluminum
Certified	Yes	NJ	SHW04.06500	NPW, SCM	ICP	[SW-846 6010B] [SW-846 6010C]	Antimony
Certified	Yes	NJ	SHW04.09000	NPW, SCM	ICP	[SW-846 6010C] [SW-846 6010B]	Arsenic
Certified	Yes	NJ	SHW04.11500	NPW, SCM	ICP	[SW-846 6010B] [SW-846 6010C]	Barium
Certified	Yes	NJ	SHW04.13500	NPW, SCM	ICP	[SW-846 6010C] [SW-846 6010B]	Beryllium
Certified	Yes	NJ	SHW04.15500	NPW, SCM	ICP	[SW-846 6010B] [SW-846 6010C]	Cadmium
Certified	Yes	NJ	SHW04.17500	NPW, SCM	ICP	[SW-846 6010C] [SW-846 6010B]	Calcium
Certified	Yes	NJ	SHW04.18500	NPW, SCM	ICP	[SW-846 6010B] [SW-846 6010C]	Chromium
Certified	Yes	NJ	SHW04.21000	NPW, SCM	Colorimetric	[SW-846 7196A, Rev. 1, 7/92]	Chromium (VI)
Certified	Yes	NJ	SHW04.22500	NPW, SCM	ICP	[SW-846 6010C] [SW-846 6010B]	Cobalt
Certified	Yes	NJ	SHW04.24500	NPW, SCM	ICP	[SW-846 6010B] [SW-846 6010C]	Copper
Certified	Yes	NJ	SHW04.26000	NPW, SCM	ICP	[SW-846 6010B] [SW-846 6010C]	Iron
Certified	Yes	NJ	SHW04.27500	NPW, SCM	ICP	[SW-846 6010C] [SW-846 6010B]	Lead
Certified	Yes	NJ	SHW04.30500	NPW, SCM	ICP	[SW-846 6010B] [SW-846 6010C]	Magnesium
Certified	Yes	NJ	SHW04.31500	NPW, SCM	ICP	[SW-846 6010C] [SW-846 6010B]	Manganese
Certified	Yes	NJ	SHW04.34000	NPW, SCM	ICP	[SW-846 6010C] [SW-846 6010B]	Molybdenum
Certified	Yes	NJ	SHW04.35500	NPW, SCM	ICP	[SW-846 6010C] [SW-846 6010B]	Nickel
Certified	Yes	NJ	SHW04.38000	NPW, SCM	ICP	[SW-846 6010C] [SW-846 6010B]	Potassium
Certified	Yes	NJ	SHW04.39000	NPW, SCM	ICP	[SW-846 6010C] [SW-846 6010B]	Selenium
Certified	Yes	NJ	SHW04.41000	NPW, SCM	ICP	[SW-846 6010C] [SW-846 6010B]	Silver
Certified	Yes	NJ	SHW04.43000	NPW, SCM	ICP	[SW-846 6010C] [SW-846 6010B]	Sodium
Certified	Yes	NJ	SHW04.45000	NPW, SCM	ICP	[SW-846 6010C] [SW-846 6010B]	Thallium
Certified	Yes	NJ	SHW04.47100	NPW, SCM	ICP	[SW-846 6010C] [SW-846 6010B]	Tin
Certified	Yes	NJ	SHW04.47500	NPW, SCM	ICP	[SW-846 6010C] [SW-846 6010B]	Vanadium
Certified	Yes	NJ	SHW04.49000	NPW, SCM	ICP	[SW-846 6010C] [SW-846 6010B]	Zinc

Category: SHW06 -- Organic Parameters, Chromatography

Status	Eligible to Report NJ Data	State	Code	Matrix	Technique Description	Approved Method	Parameter Description
Certified	Yes	NJ	SHW06.02010	NPW, SCM	Microextraction, GC, ECD	[SW-846 8011, Rev. 0, 7/92]	Dibromoethane (1,2-) (EDB)

KEY: AE = Air and Emissions, BT = Biological Tissues, DW = Drinking Water, NPW = Non-Potable Water, SCM = Solid and Chemical Materials

New Jersey Department of Environmental Protection

National Environmental Laboratory Accreditation Program

ANNUAL CERTIFIED PARAMETER LIST AND CURRENT STATUS

Effective as of 08/03/2009 until 06/30/2010

Laboratory Name: EMPIRICAL LABORATORIES, LLC Laboratory Number: TN473 Activity ID: NLC090002
621 MAINSTREAM DR
STE 270
NASHVILLE, TN 37228

Category: SHW06 -- Organic Parameters, Chromatography

Status	Eligible to Report NJ Data	State	Code	Matrix	Technique Description	Approved Method	Parameter Description
Certified	Yes	NJ	SHW06.02020	NPW, SCM	Microextraction, GC, ECD	[SW-846 8011, Rev. 0, 7/92]	Dibromo-3-chloropropane (1,2-)
Certified	Yes	NJ	SHW06.04010	NPW, SCM	GC P&T, FID	[SW-846 8015C] [SW-846 8015B]	Gasoline range organic
Certified	Yes	NJ	SHW06.04500	NPW, SCM	Extraction, GC, FID	[SW-846 8015C] [SW-846 8015B]	Diesel range organic
Certified	Yes	NJ	SHW06.04511	NPW, SCM	Extraction, GC, FID	[OTHER FL - PRO]	Petroleum Organics
Certified	Yes	NJ	SHW06.12010	NPW, SCM	GC, Extraction, ECD or HECD, Capillary	[SW-846 8081A, Rev. 1, 12/96]	Aldrin
Certified	Yes	NJ	SHW06.12020	NPW, SCM	GC, Extraction, ECD or HECD, Capillary	[SW-846 8081A, Rev. 1, 12/96]	Alpha BHC
Certified	Yes	NJ	SHW06.12030	NPW, SCM	GC, Extraction, ECD or HECD, Capillary	[SW-846 8081A, Rev. 1, 12/96]	Beta BHC
Certified	Yes	NJ	SHW06.12040	NPW, SCM	GC, Extraction, ECD or HECD, Capillary	[SW-846 8081A, Rev. 1, 12/96]	Delta BHC
Certified	Yes	NJ	SHW06.12050	NPW, SCM	GC, Extraction, ECD or HECD, Capillary	[SW-846 8081A, Rev. 1, 12/96]	Lindane (gamma BHC)
Certified	Yes	NJ	SHW06.12060	NPW, SCM	GC, Extraction, ECD or HECD, Capillary	[SW-846 8081A, Rev. 1, 12/96]	Chlordane (technical)
Certified	Yes	NJ	SHW06.12070	NPW, SCM	GC, Extraction, ECD or HECD, Capillary	[SW-846 8081A, Rev. 1, 12/96]	Chlordane (alpha)
Certified	Yes	NJ	SHW06.12080	NPW, SCM	GC, Extraction, ECD or HECD, Capillary	[SW-846 8081A, Rev. 1, 12/96]	Chlordane (gamma)
Certified	Yes	NJ	SHW06.12090	NPW, SCM	GC, Extraction, ECD or HECD, Capillary	[SW-846 8081A, Rev. 1, 12/96]	DDD (4,4'-)
Certified	Yes	NJ	SHW06.12100	NPW, SCM	GC, Extraction, ECD or HECD, Capillary	[SW-846 8081A, Rev. 1, 12/96]	DDE (4,4'-)
Certified	Yes	NJ	SHW06.12110	NPW, SCM	GC, Extraction, ECD or HECD, Capillary	[SW-846 8081A, Rev. 1, 12/96]	DDT (4,4'-)
Certified	Yes	NJ	SHW06.12120	NPW, SCM	GC, Extraction, ECD or HECD, Capillary	[SW-846 8081A, Rev. 1, 12/96]	Dieldrin
Certified	Yes	NJ	SHW06.12130	NPW, SCM	GC, Extraction, ECD or HECD, Capillary	[SW-846 8081A, Rev. 1, 12/96]	Endosulfan I
Certified	Yes	NJ	SHW06.12140	NPW, SCM	GC, Extraction, ECD or HECD, Capillary	[SW-846 8081A, Rev. 1, 12/96]	Endosulfan II
Certified	Yes	NJ	SHW06.12150	NPW, SCM	GC, Extraction, ECD or HECD, Capillary	[SW-846 8081A, Rev. 1, 12/96]	Endosulfan sulfate
Certified	Yes	NJ	SHW06.12160	NPW, SCM	GC, Extraction, ECD or HECD, Capillary	[SW-846 8081A, Rev. 1, 12/96]	Endrin
Certified	Yes	NJ	SHW06.12170	NPW, SCM	GC, Extraction, ECD or HECD, Capillary	[SW-846 8081A, Rev. 1, 12/96]	Endrin aldehyde
Certified	Yes	NJ	SHW06.12180	NPW, SCM	GC, Extraction, ECD or HECD, Capillary	[SW-846 8081A, Rev. 1, 12/96]	Endrin ketone
Certified	Yes	NJ	SHW06.12190	NPW, SCM	GC, Extraction, ECD or HECD, Capillary	[SW-846 8081A, Rev. 1, 12/96]	Heptachlor
Certified	Yes	NJ	SHW06.12200	NPW, SCM	GC, Extraction, ECD or HECD, Capillary	[SW-846 8081A, Rev. 1, 12/96]	Heptachlor epoxide
Certified	Yes	NJ	SHW06.12210	NPW, SCM	GC, Extraction, ECD or HECD, Capillary	[SW-846 8081A, Rev. 1, 12/96]	Methoxychlor
Certified	Yes	NJ	SHW06.12220	NPW, SCM	GC, Extraction, ECD or HECD, Capillary	[SW-846 8081A, Rev. 1, 12/96]	Toxaphene
Certified	Yes	NJ	SHW06.13110	NPW, SCM	GC, Extraction, ECD or HECD, Capillary	[SW-846 8082, Rev. 0, 12/96]	PCB 1016
Certified	Yes	NJ	SHW06.13120	NPW, SCM	GC, Extraction, ECD or HECD, Capillary	[SW-846 8082, Rev. 0, 12/96]	PCB 1221
Certified	Yes	NJ	SHW06.13130	NPW, SCM	GC, Extraction, ECD or HECD, Capillary	[SW-846 8082, Rev. 0, 12/96]	PCB 1232
Certified	Yes	NJ	SHW06.13140	NPW, SCM	GC, Extraction, ECD or HECD, Capillary	[SW-846 8082, Rev. 0, 12/96]	PCB 1242
Certified	Yes	NJ	SHW06.13150	NPW, SCM	GC, Extraction, ECD or HECD, Capillary	[SW-846 8082, Rev. 0, 12/96]	PCB 1248
Certified	Yes	NJ	SHW06.13160	NPW, SCM	GC, Extraction, ECD or HECD, Capillary	[SW-846 8082, Rev. 0, 12/96]	PCB 1254

KEY: AE = Air and Emissions, BT = Biological Tissues, DW = Drinking Water, NPW = Non-Potable Water, SCM = Solid and Chemical Materials

ANNUAL CERTIFIED PARAMETER LIST AND CURRENT STATUS

Effective as of 08/03/2009 until 06/30/2010

Laboratory Name: EMPIRICAL LABORATORIES, LLC Laboratory Number: TN473 Activity ID: NLC090002
621 MAINSTREAM DR
STE 270
NASHVILLE, TN 37228

Category: SHW06 -- Organic Parameters, Chromatography

Status	Eligible to Report NJ Data	State	Code	Matrix	Technique Description	Approved Method	Parameter Description
Certified	Yes	NJ	SHW06.13170	NPW, SCM	GC, Extraction, ECD or HECD, Capillary	[SW-846 8082, Rev. 0, 12/96]	PCB 1260
Certified	Yes	NJ	SHW06.23010	NPW, SCM	GC, Extraction, ECD, Capillary	[SW-846 8151A, Rev 1, 9/96]	Dalapon
Certified	Yes	NJ	SHW06.23020	NPW, SCM	GC, Extraction, ECD, Capillary	[SW-846 8151A, Rev 1, 9/96]	Dicamba
Certified	Yes	NJ	SHW06.23021	NPW, SCM	GC, Extraction, ECD, Capillary	[SW-846 8151A, Rev. 1, 9/96]	Dichlorprop
Certified	Yes	NJ	SHW06.23030	NPW, SCM	GC, Extraction, ECD, Capillary	[SW-846 8151A, Rev 1, 9/96]	Dinoseb
Certified	Yes	NJ	SHW06.23040	NPW, SCM	GC, Extraction, ECD, Capillary	[SW-846 8151A, Rev 1, 9/96]	D (2,4-)
Certified	Yes	NJ	SHW06.23050	NPW, SCM	GC, Extraction, ECD, Capillary	[SW-846 8151A, Rev 1, 9/96]	T (2,4,5-)
Certified	Yes	NJ	SHW06.23060	NPW, SCM	GC, Extraction, ECD, Capillary	[SW-846 8151A, Rev 1, 9/96]	TP (2,4,5-) (Silvex)
Certified	Yes	NJ	SHW06.23063	NPW, SCM	GC, Extraction, ECD, Capillary	[SW-846 8151A, Rev. 1, 9/96]	MCPA
Certified	Yes	NJ	SHW06.23064	NPW, SCM	GC, Extraction, ECD, Capillary	[SW-846 8151A, Rev. 1, 9/96]	MCPP
Certified	Yes	NJ	SHW06.28010	NPW, SCM	HPLC, UV Detector	[SW-846 8330, Rev. 0, 9/94]	HMX
Certified	Yes	NJ	SHW06.28020	NPW, SCM	HPLC, UV Detector	[SW-846 8330, Rev. 0, 9/94]	RDX
Certified	Yes	NJ	SHW06.28030	NPW, SCM	HPLC, UV Detector	[SW-846 8330, Rev. 0, 9/94]	Trinitrobenzene (1,3,5-)
Certified	Yes	NJ	SHW06.28040	NPW, SCM	HPLC, UV Detector	[SW-846 8330, Rev. 0, 9/94]	Dinitrobenzene (1,3-)
Certified	Yes	NJ	SHW06.28050	NPW, SCM	HPLC, UV Detector	[SW-846 8330, Rev. 0, 9/94]	Tetryl
Certified	Yes	NJ	SHW06.28060	NPW, SCM	HPLC, UV Detector	[SW-846 8330, Rev. 0, 9/94]	Nitrobenzene
Certified	Yes	NJ	SHW06.28070	NPW, SCM	HPLC, UV Detector	[SW-846 8330, Rev. 0, 9/94]	Trinitrotoluene (2,4,6-)
Certified	Yes	NJ	SHW06.28080	NPW, SCM	HPLC, UV Detector	[SW-846 8330, Rev. 0, 9/94]	Dinitrotoluene (4-amino-2,6-)
Certified	Yes	NJ	SHW06.28090	NPW, SCM	HPLC, UV Detector	[SW-846 8330, Rev. 0, 9/94]	Dinitrotoluene (2-amino-4,6-)
Certified	Yes	NJ	SHW06.28100	NPW, SCM	HPLC, UV Detector	[SW-846 8330, Rev. 0, 9/94]	Dinitrotoluene (2,4-)
Certified	Yes	NJ	SHW06.28110	NPW, SCM	HPLC, UV Detector	[SW-846 8330, Rev. 0, 9/94]	Dinitrotoluene (2,6-)
Certified	Yes	NJ	SHW06.28120	NPW, SCM	HPLC, UV Detector	[SW-846 8330, Rev. 0, 9/94]	Nitrotoluene (2-)
Certified	Yes	NJ	SHW06.28130	NPW, SCM	HPLC, UV Detector	[SW-846 8330, Rev. 0, 9/94]	Nitrotoluene (3-)
Certified	Yes	NJ	SHW06.28140	NPW, SCM	HPLC, UV Detector	[SW-846 8330, Rev. 0, 9/94]	Nitrotoluene (4-)

Category: SHW07 -- Organic Parameters, Chromatography/MS

Status	Eligible to Report NJ Data	State	Code	Matrix	Technique Description	Approved Method	Parameter Description
Certified	Yes	NJ	SHW07.04010	NPW, SCM	GC/MS, P & T or Direct Injection, Capillary	[SW-846 8260B, Rev. 2, 12/96]	Benzene
Certified	Yes	NJ	SHW07.04012	NPW, SCM	GC/MS, P & T or Direct Injection, Capillary	[SW-846 8260B, Rev. 2, 12/96]	Butyl benzene (n-)

KEY: AE = Air and Emissions, BT = Biological Tissues, DW = Drinking Water, NPW = Non-Potable Water, SCM = Solid and Chemical Materials

ANNUAL CERTIFIED PARAMETER LIST AND CURRENT STATUS

Effective as of 08/03/2009 until 06/30/2010

Laboratory Name: EMPIRICAL LABORATORIES, LLC Laboratory Number: TN473 Activity ID: NLC090002
621 MAINSTREAM DR
STE 270
NASHVILLE, TN 37228

Category: SHW07 -- Organic Parameters, Chromatography/MS

Status	Eligible to Report NJ Data	State	Code	Matrix	Technique Description	Approved Method	Parameter Description
Certified	Yes	NJ	SHW07.04013	NPW, SCM	GC/MS, P & T or Direct Injection, Capillary	[SW-846 8260B, Rev. 2, 12/96]	Sec-butylbenzene
Certified	Yes	NJ	SHW07.04014	NPW, SCM	GC/MS, P & T or Direct Injection, Capillary	[SW-846 8260B, Rev. 2, 12/96]	Tert-butylbenzene
Certified	Yes	NJ	SHW07.04020	NPW, SCM	GC/MS, P & T or Direct Injection, Capillary	[SW-846 8260B, Rev. 2, 12/96]	Chlorobenzene
Certified	Yes	NJ	SHW07.04030	NPW, SCM	GC/MS, P & T or Direct Injection, Capillary	[SW-846 8260B, Rev. 2, 12/96]	Dichlorobenzene (1,2-)
Certified	Yes	NJ	SHW07.04040	NPW, SCM	GC/MS, P & T or Direct Injection, Capillary	[SW-846 8260B, Rev. 2, 12/96]	Dichlorobenzene (1,3-)
Certified	Yes	NJ	SHW07.04050	NPW, SCM	GC/MS, P & T or Direct Injection, Capillary	[SW-846 8260B, Rev. 2, 12/96]	Dichlorobenzene (1,4-)
Certified	Yes	NJ	SHW07.04060	NPW, SCM	GC/MS, P & T or Direct Injection, Capillary	[SW-846 8260B, Rev. 2, 12/96]	Ethylbenzene
Certified	Yes	NJ	SHW07.04065	NPW, SCM	GC/MS, P & T or Direct Injection, Capillary	[SW-846 8260B, Rev. 2, 12/96]	Isopropylbenzene
Certified	Yes	NJ	SHW07.04067	NPW, SCM	GC/MS, P & T or Direct Injection, Capillary	[SW-846 8260B, Rev. 2, 12/96]	Propylbenzene (n-)
Certified	Yes	NJ	SHW07.04070	NPW, SCM	GC/MS, P & T or Direct Injection, Capillary	[SW-846 8260B, Rev. 2, 12/96]	Toluene
Certified	Yes	NJ	SHW07.04071	NPW, SCM	GC/MS, P & T or Direct Injection, Capillary	[SW-846 8260B, Rev. 2, 12/96]	Isopropyltoluene (4-)
Certified	Yes	NJ	SHW07.04072	NPW, SCM	GC/MS, P & T or Direct Injection, Capillary	[SW-846 8260B, Rev. 2, 12/96]	Trichlorobenzene (1,2,3-)
Certified	Yes	NJ	SHW07.04073	NPW, SCM	GC/MS, P & T or Direct Injection, Capillary	[SW-846 8260B, Rev. 2, 12/96]	Trimethylbenzene (1,2,4-)
Certified	Yes	NJ	SHW07.04074	NPW, SCM	GC/MS, P & T or Direct Injection, Capillary	[SW-846 8260B, Rev. 2, 12/96]	Trimethylbenzene (1,3,5-)
Certified	Yes	NJ	SHW07.04080	NPW, SCM	GC/MS, P & T or Direct Injection, Capillary	[SW-846 8260B, Rev. 2, 12/96]	Xylenes (total)
Certified	Yes	NJ	SHW07.04089	NPW, SCM	GC/MS, P & T or Direct Injection, Capillary	[SW-846 8260B, Rev. 2, 12/96]	Bromochloromethane
Certified	Yes	NJ	SHW07.04090	NPW, SCM	GC/MS, P & T or Direct Injection, Capillary	[SW-846 8260B, Rev. 2, 12/96]	Bromodichloromethane
Certified	Yes	NJ	SHW07.04100	NPW, SCM	GC/MS, P & T or Direct Injection, Capillary	[SW-846 8260B, Rev. 2, 12/96]	Bromoform
Certified	Yes	NJ	SHW07.04110	NPW, SCM	GC/MS, P & T or Direct Injection, Capillary	[SW-846 8260B, Rev. 2, 12/96]	Bromomethane
Certified	Yes	NJ	SHW07.04120	NPW, SCM	GC/MS, P & T or Direct Injection, Capillary	[SW-846 8260B, Rev. 2, 12/96]	Carbon tetrachloride
Certified	Yes	NJ	SHW07.04130	NPW, SCM	GC/MS, P & T or Direct Injection, Capillary	[SW-846 8260B, Rev. 2, 12/96]	Chloroethane
Certified	Yes	NJ	SHW07.04150	NPW, SCM	GC/MS, P & T or Direct Injection, Capillary	[SW-846 8260B, Rev. 2, 12/96]	Chloroform
Certified	Yes	NJ	SHW07.04160	NPW, SCM	GC/MS, P & T or Direct Injection, Capillary	[SW-846 8260B, Rev. 2, 12/96]	Chloromethane
Certified	Yes	NJ	SHW07.04180	NPW, SCM	GC/MS, P & T or Direct Injection, Capillary	[SW-846 8260B, Rev. 2, 12/96]	Dibromochloromethane
Certified	Yes	NJ	SHW07.04185	NPW, SCM	GC/MS, P & T or Direct Injection, Capillary	[SW-846 8260B, Rev. 2, 12/96]	Dibromoethane (1,2-) (EDB)
Certified	Yes	NJ	SHW07.04186	NPW, SCM	GC/MS, P & T or Direct Injection, Capillary	[SW-846 8260B, Rev. 2, 12/96]	Dibromomethane
Certified	Yes	NJ	SHW07.04187	NPW, SCM	GC/MS, P & T or Direct Injection, Capillary	[SW-846 8260B, Rev. 2, 12/96]	Dibromo-3-chloropropane (1,2-)
Certified	Yes	NJ	SHW07.04190	NPW, SCM	GC/MS, P & T or Direct Injection, Capillary	[SW-846 8260B, Rev. 2, 12/96]	Dichlorodifluoromethane
Certified	Yes	NJ	SHW07.04200	NPW, SCM	GC/MS, P & T or Direct Injection, Capillary	[SW-846 8260B, Rev. 2, 12/96]	Dichloroethane (1,1-)
Certified	Yes	NJ	SHW07.04210	NPW, SCM	GC/MS, P & T or Direct Injection, Capillary	[SW-846 8260B, Rev. 2, 12/96]	Dichloroethane (1,2-)
Certified	Yes	NJ	SHW07.04220	NPW, SCM	GC/MS, P & T or Direct Injection, Capillary	[SW-846 8260B, Rev. 2, 12/96]	Dichloroethene (1,1-)
Certified	Yes	NJ	SHW07.04230	NPW, SCM	GC/MS, P & T or Direct Injection, Capillary	[SW-846 8260B, Rev. 2, 12/96]	Dichloroethene (trans-1,2-)

KEY: AE = Air and Emissions, BT = Biological Tissues, DW = Drinking Water, NPW = Non-Potable Water, SCM = Solid and Chemical Materials

ANNUAL CERTIFIED PARAMETER LIST AND CURRENT STATUS

Effective as of 08/03/2009 until 06/30/2010

Laboratory Name: EMPIRICAL LABORATORIES, LLC Laboratory Number: TN473 Activity ID: NLC090002
621 MAINSTREAM DR
STE 270
NASHVILLE, TN 37228

Category: SHW07 -- Organic Parameters, Chromatography/MS

Status	Eligible to Report NJ Data	State	Code	Matrix	Technique Description	Approved Method	Parameter Description
Certified	Yes	NJ	SHW07.04235	NPW, SCM	GC/MS, P & T or Direct Injection, Capillary	[SW-846 8260B, Rev. 2, 12/96]	Dichloroethene (cis-1,2-)
Certified	Yes	NJ	SHW07.04240	NPW, SCM	GC/MS, P & T or Direct Injection, Capillary	[SW-846 8260B, Rev. 2, 12/96]	Dichloropropane (1,2-)
Certified	Yes	NJ	SHW07.04241	NPW, SCM	GC/MS, P & T or Direct Injection, Capillary	[SW-846 8260B, Rev. 2, 12/96]	Dichloropropane (1,3-)
Applied	No	NJ	SHW07.04242	NPW, SCM	GC/MS, P & T or Direct Injection, Capillary	[SW-846 8260B]	Dichloropropane (2,2-)
Applied	No	NJ	SHW07.04249	NPW, SCM	GC/MS, P & T or Direct Injection, Capillary	[SW-846 8260B]	Dichloropropene (1,1-)
Certified	Yes	NJ	SHW07.04250	NPW, SCM	GC/MS, P & T or Direct Injection, Capillary	[SW-846 8260B, Rev. 2, 12/96]	Dichloropropene (cis-1,3-)
Certified	Yes	NJ	SHW07.04255	NPW, SCM	GC/MS, P & T or Direct Injection, Capillary	[SW-846 8260B, Rev. 2, 12/96]	Dichloro-2-butene (trans-1,4-)
Certified	Yes	NJ	SHW07.04260	NPW, SCM	GC/MS, P & T or Direct Injection, Capillary	[SW-846 8260B, Rev. 2, 12/96]	Methylene chloride (Dichloromethane)
Certified	Yes	NJ	SHW07.04270	NPW, SCM	GC/MS, P & T or Direct Injection, Capillary	[SW-846 8260B, Rev. 2, 12/96]	Tetrachloroethane (1,1,2,2-)
Certified	Yes	NJ	SHW07.04280	NPW, SCM	GC/MS, P & T or Direct Injection, Capillary	[SW-846 8260B, Rev. 2, 12/96]	Tetrachloroethene
Certified	Yes	NJ	SHW07.04290	NPW, SCM	GC/MS, P & T or Direct Injection, Capillary	[SW-846 8260B, Rev. 2, 12/96]	Trichloroethane (1,1,1-)
Certified	Yes	NJ	SHW07.04300	NPW, SCM	GC/MS, P & T or Direct Injection, Capillary	[SW-846 8260B, Rev. 2, 12/96]	Trichloroethane (1,1,2-)
Certified	Yes	NJ	SHW07.04310	NPW, SCM	GC/MS, P & T or Direct Injection, Capillary	[SW-846 8260B, Rev. 2, 12/96]	Trichloroethene
Certified	Yes	NJ	SHW07.04320	NPW, SCM	GC/MS, P & T or Direct Injection, Capillary	[SW-846 8260B, Rev. 2, 12/96]	Trichlorofluoromethane
Certified	Yes	NJ	SHW07.04322	NPW, SCM	GC/MS, P & T or Direct Injection, Capillary	[SW-846 8260B, Rev. 2, 12/96]	Trichloro (1,1,2-) trifluoroethane (1,2,2-)
Certified	Yes	NJ	SHW07.04325	NPW, SCM	GC/MS, P & T or Direct Injection, Capillary	[SW-846 8260B, Rev. 2, 12/96]	Trichloropropane (1,2,3-)
Certified	Yes	NJ	SHW07.04327	NPW, SCM	GC/MS, P & T or Direct Injection, Capillary	[SW-846 8260B, Rev. 2, 12/96]	Vinyl acetate
Certified	Yes	NJ	SHW07.04330	NPW, SCM	GC/MS, P & T or Direct Injection, Capillary	[SW-846 8260B, Rev. 2, 12/96]	Vinyl chloride
Certified	Yes	NJ	SHW07.04340	NPW, SCM	GC/MS, P & T or Direct Injection, Capillary	[SW-846 8260B, Rev. 2, 12/96]	Acetone
Certified	Yes	NJ	SHW07.04350	NPW, SCM	GC/MS, P & T or Direct Injection, Capillary	[SW-846 8260B, Rev. 2, 12/96]	Carbon disulfide
Certified	Yes	NJ	SHW07.04360	NPW, SCM	GC/MS, P & T or Direct Injection, Capillary	[SW-846 8260B, Rev. 2, 12/96]	Butanone (2-)
Certified	Yes	NJ	SHW07.04367	NPW, SCM	GC/MS, P & T or Direct Injection, Capillary	[SW-846 8260B, Rev. 2, 12/96]	Ethyl methacrylate
Certified	Yes	NJ	SHW07.04370	NPW, SCM	GC/MS, P & T or Direct Injection, Capillary	[SW-846 8260B, Rev. 2, 12/96]	Hexanone (2-)
Certified	Yes	NJ	SHW07.04371	NPW, SCM	GC/MS, P & T or Direct Injection, Capillary	[SW-846 8260B, Rev. 2, 12/96]	Methacrylonitrile
Certified	Yes	NJ	SHW07.04373	NPW, SCM	GC/MS, P & T or Direct Injection, Capillary	[SW-846 8260B, Rev. 2, 12/96]	Methyl methacrylate
Certified	Yes	NJ	SHW07.04375	NPW, SCM	GC/MS, P & T or Direct Injection, Capillary	[SW-846 8260B, Rev. 2, 12/96]	Methyl iodide
Certified	Yes	NJ	SHW07.04376	NPW, SCM	GC/MS, P & T or Direct Injection, Capillary	[SW-846 8260B, Rev. 2, 12/96]	Iso-butyl alcohol
Certified	Yes	NJ	SHW07.04380	NPW, SCM	GC/MS, P & T or Direct Injection, Capillary	[SW-846 8260B, Rev. 2, 12/96]	Pentanone (4-methyl-2-)
Certified	Yes	NJ	SHW07.04385	NPW, SCM	GC/MS, P & T or Direct Injection, Capillary	[SW-846 8260B, Rev. 2, 12/96]	Propionitrile
Certified	Yes	NJ	SHW07.04390	NPW, SCM	GC/MS, P & T or Direct Injection, Capillary	[SW-846 8260B, Rev. 2, 12/96]	Methyl tert-butyl ether
Certified	Yes	NJ	SHW07.04398	NPW, SCM	GC/MS, P & T or Direct Injection, Capillary	[SW-846 8260B, Rev. 2, 12/96]	Acetonitrile
Certified	Yes	NJ	SHW07.04400	NPW, SCM	GC/MS, P & T or Direct Injection, Capillary	[SW-846 8260B, Rev. 2, 12/96]	Acrolein

KEY: AE = Air and Emissions, BT = Biological Tissues, DW = Drinking Water, NPW = Non-Potable Water, SCM = Solid and Chemical Materials

ANNUAL CERTIFIED PARAMETER LIST AND CURRENT STATUS

Effective as of 08/03/2009 until 06/30/2010

Laboratory Name: EMPIRICAL LABORATORIES, LLC Laboratory Number: TN473 Activity ID: NLC090002
621 MAINSTREAM DR
STE 270
NASHVILLE, TN 37228

Category: SHW07 -- Organic Parameters, Chromatography/MS

Status	Eligible to Report NJ Data	State	Code	Matrix	Technique Description	Approved Method	Parameter Description
Certified	Yes	NJ	SHW07.04410	NPW, SCM	GC/MS, P & T or Direct Injection, Capillary	[SW-846 8260B, Rev. 2, 12/96]	Acrylonitrile
Certified	Yes	NJ	SHW07.04500	NPW, SCM	GC/MS, P & T or Direct Injection, Capillary	[SW-846 8260B, Rev. 2, 12/96]	Hexachlorobutadiene (1,3-)
Certified	Yes	NJ	SHW07.04530	NPW, SCM	GC/MS, P & T or Direct Injection, Capillary	[SW-846 8260B, Rev. 2, 12/96]	Hexachloroethane
Certified	Yes	NJ	SHW07.04540	NPW, SCM	GC/MS, P & T or Direct Injection, Capillary	[SW-846 8260B]	Naphthalene
Certified	Yes	NJ	SHW07.04550	NPW, SCM	GC/MS, P & T or Direct Injection, Capillary	[SW-846 8260B, Rev. 2, 12/96]	Styrene
Certified	Yes	NJ	SHW07.04560	NPW, SCM	GC/MS, P & T or Direct Injection, Capillary	[SW-846 8260B, Rev. 2, 12/96]	Tetrachloroethane (1,1,1,2-)
Certified	Yes	NJ	SHW07.04570	NPW, SCM	GC/MS, P & T or Direct Injection, Capillary	[SW-846 8260B, Rev. 2, 12/96]	Trichlorobenzene (1,2,4-)
Certified	Yes	NJ	SHW07.04590	NPW, SCM	GC/MS, P & T or Direct Injection, Capillary	[SW-846 8260B, Rev. 2, 12/96]	Dioxane (1,4-)
Certified	Yes	NJ	SHW07.04665	NPW, SCM	GC/MS, Extract or Dir Inj, Capillary	[SW-846 8270C] [SW-846 8270D]	Acetophenone
Certified	Yes	NJ	SHW07.04670	NPW, SCM	GC/MS, Extract or Dir Inj, Capillary	[SW-846 8270C] [SW-846 8270D]	Acetylaminofluorene (2-)
Certified	Yes	NJ	SHW07.04675	NPW, SCM	GC/MS, Extract or Dir Inj, Capillary	[SW-846 8270C] [SW-846 8270D]	Aminobiphenyl (4-)
Certified	Yes	NJ	SHW07.04680	NPW, SCM	GC/MS, Extract or Dir Inj, Capillary	[SW-846 8270C] [SW-846 8270D]	Aramite
Certified	Yes	NJ	SHW07.04705	NPW, SCM	GC/MS, Extract or Dir Inj, Capillary	[SW-846 8270C] [SW-846 8270D]	Chlorobenzilate
Certified	Yes	NJ	SHW07.04715	NPW, SCM	GC/MS, Extract or Dir Inj, Capillary	[SW-846 8270D] [SW-846 8270C]	Diallate (cis)
Certified	Yes	NJ	SHW07.04720	NPW, SCM	GC/MS, Extract or Dir Inj, Capillary	[SW-846 8270D] [SW-846 8270C]	Diallate (trans)
Certified	Yes	NJ	SHW07.04755	NPW, SCM	GC/MS, Extract or Dir Inj, Capillary	[SW-846 8270C] [SW-846 8270D]	Dichlorophenol (2,6-)
Certified	Yes	NJ	SHW07.04760	NPW, SCM	GC/MS, Extract or Dir Inj, Capillary	[SW-846 8270D] [SW-846 8270C]	Dimethoate
Certified	Yes	NJ	SHW07.04767	NPW, SCM	GC/MS, Extract or Dir Inj, Capillary	[SW-846 8270C] [SW-846 8270D]	Dimethylaminoazobenzene
Certified	Yes	NJ	SHW07.04770	NPW, SCM	GC/MS, Extract or Dir Inj, Capillary	[SW-846 8270D] [SW-846 8270C]	Dimethylbenz(a)anthracene (7,12-)
Certified	Yes	NJ	SHW07.04775	NPW, SCM	GC/MS, Extract or Dir Inj, Capillary	[SW-846 8270C] [SW-846 8270D]	Dimethyl benzidine (3,3-)
Certified	Yes	NJ	SHW07.04780	NPW, SCM	GC/MS, Extract or Dir Inj, Capillary	[SW-846 8270C] [SW-846 8270D]	Dinitrobenzene (1,3-)
Certified	Yes	NJ	SHW07.04785	NPW, SCM	GC/MS, Extract or Dir Inj, Capillary	[SW-846 8270C] [SW-846 8270D]	Dinoseb
Certified	Yes	NJ	SHW07.04790	NPW, SCM	GC/MS, Extract or Dir Inj, Capillary	[SW-846 8270C] [SW-846 8270D]	Disulfoton
Certified	Yes	NJ	SHW07.04795	NPW, SCM	GC/MS, Extract or Dir Inj, Capillary	[SW-846 8270C] [SW-846 8270D]	Famphur
Certified	Yes	NJ	SHW07.04800	NPW, SCM	GC/MS, Extract or Dir Inj, Capillary	[SW-846 8270C] [SW-846 8270D]	Hexachlorophene
Certified	Yes	NJ	SHW07.04810	NPW, SCM	GC/MS, Extract or Dir Inj, Capillary	[SW-846 8270C] [SW-846 8270D]	Isodrin
Certified	Yes	NJ	SHW07.04815	NPW, SCM	GC/MS, Extract or Dir Inj, Capillary	[SW-846 8270C] [SW-846 8270D]	Isosafrole (cis-)
Certified	Yes	NJ	SHW07.04820	NPW, SCM	GC/MS, Extract or Dir Inj, Capillary	[SW-846 8270C] [SW-846 8270D]	Isosafrole (trans-)
Certified	Yes	NJ	SHW07.04825	NPW, SCM	GC/MS, Extract or Dir Inj, Capillary	[SW-846 8270C] [SW-846 8270D]	Kepone
Certified	Yes	NJ	SHW07.04830	NPW, SCM	GC/MS, Extract or Dir Inj, Capillary	[SW-846 8270C] [SW-846 8270D]	Methanesulfonate (Ethyl-)
Certified	Yes	NJ	SHW07.04835	NPW, SCM	GC/MS, Extract or Dir Inj, Capillary	[SW-846 8270C] [SW-846 8270D]	Methanesulfonate (Methyl-)
Certified	Yes	NJ	SHW07.04840	NPW, SCM	GC/MS, Extract or Dir Inj, Capillary	[SW-846 8270C] [SW-846 8270D]	Methapyrilene

KEY: AE = Air and Emissions, BT = Biological Tissues, DW = Drinking Water, NPW = Non-Potable Water, SCM = Solid and Chemical Materials

ANNUAL CERTIFIED PARAMETER LIST AND CURRENT STATUS

Effective as of 08/03/2009 until 06/30/2010

Laboratory Name: EMPIRICAL LABORATORIES, LLC Laboratory Number: TN473 Activity ID: NLC090002
621 MAINSTREAM DR
STE 270
NASHVILLE, TN 37228

Category: SHW07 -- Organic Parameters, Chromatography/MS

Status	Eligible to Report NJ Data	State	Code	Matrix	Technique Description	Approved Method	Parameter Description
Certified	Yes	NJ	SHW07.04845	NPW, SCM	GC/MS, Extract or Dir Inj, Capillary	[SW-846 8270C] [SW-846 8270D]	Methylcholanthrene (3-)
Certified	Yes	NJ	SHW07.04850	NPW, SCM	GC/MS, Extract or Dir Inj, Capillary	[SW-846 8270C] [SW-846 8270D]	Napthoquinone (1,4-)
Certified	Yes	NJ	SHW07.04855	NPW, SCM	GC/MS, Extract or Dir Inj, Capillary	[SW-846 8270C] [SW-846 8270D]	Napththylamine (1-)
Certified	Yes	NJ	SHW07.04860	NPW, SCM	GC/MS, Extract or Dir Inj, Capillary	[SW-846 8270C] [SW-846 8270D]	Napththylamine (2-)
Certified	Yes	NJ	SHW07.04870	NPW, SCM	GC/MS, Extract or Dir Inj, Capillary	[SW-846 8270C] [SW-846 8270D]	N-Nitroso-di-n-butylamine
Certified	Yes	NJ	SHW07.04875	NPW, SCM	GC/MS, Extract or Dir Inj, Capillary	[SW-846 8270C] [SW-846 8270D]	N-Nitrosomorpholine
Certified	Yes	NJ	SHW07.04880	NPW, SCM	GC/MS, Extract or Dir Inj, Capillary	[SW-846 8270C] [SW-846 8270D]	N-Nitrosopiperidine
Certified	Yes	NJ	SHW07.04885	NPW, SCM	GC/MS, Extract or Dir Inj, Capillary	[SW-846 8270C] [SW-846 8270D]	Parathion
Certified	Yes	NJ	SHW07.04890	NPW, SCM	GC/MS, Extract or Dir Inj, Capillary	[SW-846 8270C] [SW-846 8270D]	Parathion methyl
Certified	Yes	NJ	SHW07.04895	NPW, SCM	GC/MS, Extract or Dir Inj, Capillary	[SW-846 8270C] [SW-846 8270D]	Pentachlorobenzene
Certified	Yes	NJ	SHW07.04900	NPW, SCM	GC/MS, Extract or Dir Inj, Capillary	[SW-846 8270C] [SW-846 8270D]	Pentachloroethane
Certified	Yes	NJ	SHW07.04905	NPW, SCM	GC/MS, Extract or Dir Inj, Capillary	[SW-846 8270C] [SW-846 8270D]	Pentachloronitrobenzene
Certified	Yes	NJ	SHW07.04910	NPW, SCM	GC/MS, Extract or Dir Inj, Capillary	[SW-846 8270C] [SW-846 8270D]	Phenacetin
Certified	Yes	NJ	SHW07.04915	NPW, SCM	GC/MS, Extract or Dir Inj, Capillary	[SW-846 8270C] [SW-846 8270D]	Phenylenediamine (1,4-)
Certified	Yes	NJ	SHW07.04920	NPW, SCM	GC/MS, Extract or Dir Inj, Capillary	[SW-846 8270C] [SW-846 8270D]	Phenylethylamine (alpha, alpha-Dimethyl)
Certified	Yes	NJ	SHW07.04925	NPW, SCM	GC/MS, Extract or Dir Inj, Capillary	[SW-846 8270C] [SW-846 8270D]	Phorate
Certified	Yes	NJ	SHW07.04930	NPW, SCM	GC/MS, Extract or Dir Inj, Capillary	[SW-846 8270C] [SW-846 8270D]	Phosphorothioate (O,O,O-triethyl)
Certified	Yes	NJ	SHW07.04935	NPW, SCM	GC/MS, Extract or Dir Inj, Capillary	[SW-846 8270C] [SW-846 8270D]	Phosphorothioate (O,O-diethyl-O-2-pyrazinyl) [Thionazin]
Certified	Yes	NJ	SHW07.04940	NPW, SCM	GC/MS, Extract or Dir Inj, Capillary	[SW-846 8270C] [SW-846 8270D]	Picoline (2-)
Certified	Yes	NJ	SHW07.04945	NPW, SCM	GC/MS, Extract or Dir Inj, Capillary	[SW-846 8270C] [SW-846 8270D]	Pronamide
Certified	Yes	NJ	SHW07.04950	NPW, SCM	GC/MS, Extract or Dir Inj, Capillary	[SW-846 8270C] [SW-846 8270D]	Quinoline -1-Oxide (4-Nitro)
Certified	Yes	NJ	SHW07.04955	NPW, SCM	GC/MS, Extract or Dir Inj, Capillary	[SW-846 8270C] [SW-846 8270D]	Safrole
Certified	Yes	NJ	SHW07.04960	NPW, SCM	GC/MS, Extract or Dir Inj, Capillary	[SW-846 8270C] [SW-846 8270D]	Sulfotepp
Certified	Yes	NJ	SHW07.04975	NPW, SCM	GC/MS, Extract or Dir Inj, Capillary	[SW-846 8270D] [SW-846 8270C]	Tetrachlorobenzene (1,2,4,5-)
Certified	Yes	NJ	SHW07.04980	NPW, SCM	GC/MS, Extract or Dir Inj, Capillary	[SW-846 8270C] [SW-846 8270D]	Tetrachlorophenol (2,3,4,6-)
Certified	Yes	NJ	SHW07.04985	NPW, SCM	GC/MS, Extract or Dir Inj, Capillary	[SW-846 8270C] [SW-846 8270D]	Toluidine (2-) (2-Methylaniline)
Certified	Yes	NJ	SHW07.04990	NPW, SCM	GC/MS, Extract or Dir Inj, Capillary	[SW-846 8270C] [SW-846 8270D]	Toluidine (5-Nitro-2-)
Certified	Yes	NJ	SHW07.04995	NPW, SCM	GC/MS, Extract or Dir Inj, Capillary	[SW-846 8270D] [SW-846 8270C]	Trinitrobenzene (1,3,5-)
Certified	Yes	NJ	SHW07.05004	NPW, SCM	GC/MS, Extract or Dir Inj, Capillary	[SW-846 8270D] [SW-846 8270C]	N-Nitrosodiethylamine
Certified	Yes	NJ	SHW07.05005	NPW, SCM	GC/MS, Extract or Dir Inj, Capillary	[SW-846 8270C] [SW-846 8270D]	N-Nitrosodimethylamine
Certified	Yes	NJ	SHW07.05006	NPW, SCM	GC/MS, Extract or Dir Inj, Capillary	[SW-846 8270C] [SW-846 8270D]	N-Nitroso-di-n-propylamine

KEY: AE = Air and Emissions, BT = Biological Tissues, DW = Drinking Water, NPW = Non-Potable Water, SCM = Solid and Chemical Materials

New Jersey Department of Environmental Protection

National Environmental Laboratory Accreditation Program

ANNUAL CERTIFIED PARAMETER LIST AND CURRENT STATUS

Effective as of 08/03/2009 until 06/30/2010

Laboratory Name: EMPIRICAL LABORATORIES, LLC Laboratory Number: TN473 Activity ID: NLC090002
621 MAINSTREAM DR
STE 270
NASHVILLE, TN 37228

Category: SHW07 -- Organic Parameters, Chromatography/MS

Status	Eligible to Report NJ Data	State	Code	Matrix	Technique Description	Approved Method	Parameter Description
Certified	Yes	NJ	SHW07.05010	NPW, SCM	GC/MS, Extract or Dir Inj, Capillary	[SW-846 8270C] [SW-846 8270D]	N-Nitrosodiphenylamine
Certified	Yes	NJ	SHW07.05011	NPW, SCM	GC/MS, Extract or Dir Inj, Capillary	[SW-846 8270C] [SW-846 8270D]	N-Nitrosomethylethylamine
Certified	Yes	NJ	SHW07.05012	NPW, SCM	GC/MS, Extract or Dir Inj, Capillary	[SW-846 8270C] [SW-846 8270D]	N-Nitrosopyrrolidine
Certified	Yes	NJ	SHW07.05020	NPW, SCM	GC/MS, Extract or Dir Inj, Capillary	[SW-846 8270C] [SW-846 8270D]	Diphenylamine
Certified	Yes	NJ	SHW07.05030	NPW, SCM	GC/MS, Extract or Dir Inj, Capillary	[SW-846 8270C] [SW-846 8270D]	Carbazole
Certified	Yes	NJ	SHW07.05040	NPW, SCM	GC/MS, Extract or Dir Inj, Capillary	[SW-846 8270C] [SW-846 8270D]	Dichlorobenzidine (3,3'-)
Certified	Yes	NJ	SHW07.05048	NPW, SCM	GC/MS, Extract or Dir Inj, Capillary	[SW-846 8270C] [SW-846 8270D]	Aniline
Certified	Yes	NJ	SHW07.05050	NPW, SCM	GC/MS, Extract or Dir Inj, Capillary	[SW-846 8270C] [SW-846 8270D]	Chloraniline (4-)
Certified	Yes	NJ	SHW07.05060	NPW, SCM	GC/MS, Extract or Dir Inj, Capillary	[SW-846 8270C] [SW-846 8270D]	Nitroaniline (2-)
Certified	Yes	NJ	SHW07.05062	NPW, SCM	GC/MS, Extract or Dir Inj, Capillary	[SW-846 8270C] [SW-846 8270D]	Nitroaniline (3-)
Certified	Yes	NJ	SHW07.05063	NPW, SCM	GC/MS, Extract or Dir Inj, Capillary	[SW-846 8270C] [SW-846 8270D]	Nitroaniline (4-)
Certified	Yes	NJ	SHW07.05070	NPW, SCM	GC/MS, Extract or Dir Inj, Capillary	[SW-846 8270C] [SW-846 8270D]	Chloronaphthalene (2-)
Certified	Yes	NJ	SHW07.05080	NPW, SCM	GC/MS, Extract or Dir Inj, Capillary	[SW-846 8270C] [SW-846 8270D]	Hexachlorobenzene
Certified	Yes	NJ	SHW07.05090	NPW, SCM	GC/MS, Extract or Dir Inj, Capillary	[SW-846 8270C] [SW-846 8270D]	Hexachlorobutadiene (1,3-)
Certified	Yes	NJ	SHW07.05100	NPW, SCM	GC/MS, Extract or Dir Inj, Capillary	[SW-846 8270C] [SW-846 8270D]	Hexachlorocyclopentadiene
Certified	Yes	NJ	SHW07.05110	NPW, SCM	GC/MS, Extract or Dir Inj, Capillary	[SW-846 8270C] [SW-846 8270D]	Hexachloroethane
Certified	Yes	NJ	SHW07.05115	NPW, SCM	GC/MS, Extract or Dir Inj, Capillary	[SW-846 8270C] [SW-846 8270D]	Hexachloropropene
Certified	Yes	NJ	SHW07.05120	NPW, SCM	GC/MS, Extract or Dir Inj, Capillary	[SW-846 8270C] [SW-846 8270D]	Trichlorobenzene (1,2,4-)
Certified	Yes	NJ	SHW07.05130	NPW, SCM	GC/MS, Extract or Dir Inj, Capillary	[SW-846 8270C] [SW-846 8270D]	Bis (2-chloroethoxy) methane
Certified	Yes	NJ	SHW07.05132	NPW, SCM	GC/MS, Extract or Dir Inj, Capillary	[SW-846 8270C] [SW-846 8270D]	Bis (2-chloroethyl) ether
Certified	Yes	NJ	SHW07.05140	NPW, SCM	GC/MS, Extract or Dir Inj, Capillary	[SW-846 8270C] [SW-846 8270D]	Bis (2-chloroisopropyl) ether
Certified	Yes	NJ	SHW07.05150	NPW, SCM	GC/MS, Extract or Dir Inj, Capillary	[SW-846 8270C] [SW-846 8270D]	Chlorophenyl-phenyl ether (4-)
Certified	Yes	NJ	SHW07.05160	NPW, SCM	GC/MS, Extract or Dir Inj, Capillary	[SW-846 8270C] [SW-846 8270D]	Bromophenyl-phenyl ether (4-)
Certified	Yes	NJ	SHW07.05170	NPW, SCM	GC/MS, Extract or Dir Inj, Capillary	[SW-846 8270C] [SW-846 8270D]	Dinitrotoluene (2,4-)
Certified	Yes	NJ	SHW07.05180	NPW, SCM	GC/MS, Extract or Dir Inj, Capillary	[SW-846 8270C] [SW-846 8270D]	Dinitrotoluene (2,6-)
Certified	Yes	NJ	SHW07.05190	NPW, SCM	GC/MS, Extract or Dir Inj, Capillary	[SW-846 8270C] [SW-846 8270D]	Isophorone
Certified	Yes	NJ	SHW07.05200	NPW, SCM	GC/MS, Extract or Dir Inj, Capillary	[SW-846 8270C] [SW-846 8270D]	Nitrobenzene
Certified	Yes	NJ	SHW07.05210	NPW, SCM	GC/MS, Extract or Dir Inj, Capillary	[SW-846 8270C] [SW-846 8270D]	Butyl benzyl phthalate
Certified	Yes	NJ	SHW07.05220	NPW, SCM	GC/MS, Extract or Dir Inj, Capillary	[SW-846 8270C] [SW-846 8270D]	Bis (2-ethylhexyl) phthalate
Certified	Yes	NJ	SHW07.05230	NPW, SCM	GC/MS, Extract or Dir Inj, Capillary	[SW-846 8270C] [SW-846 8270D]	Diethyl phthalate
Certified	Yes	NJ	SHW07.05240	NPW, SCM	GC/MS, Extract or Dir Inj, Capillary	[SW-846 8270C] [SW-846 8270D]	Dimethyl phthalate
Certified	Yes	NJ	SHW07.05250	NPW, SCM	GC/MS, Extract or Dir Inj, Capillary	[SW-846 8270C] [SW-846 8270D]	Di-n-butyl phthalate

KEY: AE = Air and Emissions, BT = Biological Tissues, DW = Drinking Water, NPW = Non-Potable Water, SCM = Solid and Chemical Materials

New Jersey Department of Environmental Protection

National Environmental Laboratory Accreditation Program

ANNUAL CERTIFIED PARAMETER LIST AND CURRENT STATUS

Effective as of 08/03/2009 until 06/30/2010

Laboratory Name: EMPIRICAL LABORATORIES, LLC Laboratory Number: TN473 Activity ID: NLC090002
621 MAINSTREAM DR
STE 270
NASHVILLE, TN 37228

Category: SHW07 -- Organic Parameters, Chromatography/MS

Status	Eligible to Report NJ Data	State	Code	Matrix	Technique Description	Approved Method	Parameter Description
Certified	Yes	NJ	SHW07.05260	NPW, SCM	GC/MS, Extract or Dir Inj, Capillary	[SW-846 8270C] [SW-846 8270D]	Di-n-octyl phthalate
Certified	Yes	NJ	SHW07.05270	NPW, SCM	GC/MS, Extract or Dir Inj, Capillary	[SW-846 8270C] [SW-846 8270D]	Acenaphthene
Certified	Yes	NJ	SHW07.05280	NPW, SCM	GC/MS, Extract or Dir Inj, Capillary	[SW-846 8270C] [SW-846 8270D]	Anthracene
Certified	Yes	NJ	SHW07.05290	NPW, SCM	GC/MS, Extract or Dir Inj, Capillary	[SW-846 8270C] [SW-846 8270D]	Acenaphthylene
Certified	Yes	NJ	SHW07.05300	NPW, SCM	GC/MS, Extract or Dir Inj, Capillary	[SW-846 8270C] [SW-846 8270D]	Benzo(a)anthracene
Certified	Yes	NJ	SHW07.05310	NPW, SCM	GC/MS, Extract or Dir Inj, Capillary	[SW-846 8270C] [SW-846 8270D]	Benzo(a)pyrene
Certified	Yes	NJ	SHW07.05320	NPW, SCM	GC/MS, Extract or Dir Inj, Capillary	[SW-846 8270C] [SW-846 8270D]	Benzo(b)fluoranthene
Certified	Yes	NJ	SHW07.05330	NPW, SCM	GC/MS, Extract or Dir Inj, Capillary	[SW-846 8270C] [SW-846 8270D]	Benzo(ghi)perylene
Certified	Yes	NJ	SHW07.05340	NPW, SCM	GC/MS, Extract or Dir Inj, Capillary	[SW-846 8270C] [SW-846 8270D]	Benzo(k)fluoranthene
Certified	Yes	NJ	SHW07.05350	NPW, SCM	GC/MS, Extract or Dir Inj, Capillary	[SW-846 8270C] [SW-846 8270D]	Chrysene
Certified	Yes	NJ	SHW07.05360	NPW, SCM	GC/MS, Extract or Dir Inj, Capillary	[SW-846 8270C] [SW-846 8270D]	Dibenzo(a,h)anthracene
Certified	Yes	NJ	SHW07.05370	NPW, SCM	GC/MS, Extract or Dir Inj, Capillary	[SW-846 8270C] [SW-846 8270D]	Fluoranthene
Certified	Yes	NJ	SHW07.05380	NPW, SCM	GC/MS, Extract or Dir Inj, Capillary	[SW-846 8270C] [SW-846 8270D]	Fluorene
Certified	Yes	NJ	SHW07.05390	NPW, SCM	GC/MS, Extract or Dir Inj, Capillary	[SW-846 8270C] [SW-846 8270D]	Indeno(1,2,3-cd)pyrene
Certified	Yes	NJ	SHW07.05400	NPW, SCM	GC/MS, Extract or Dir Inj, Capillary	[SW-846 8270C] [SW-846 8270D]	Methylnaphthalene (2-)
Certified	Yes	NJ	SHW07.05410	NPW, SCM	GC/MS, Extract or Dir Inj, Capillary	[SW-846 8270C] [SW-846 8270D]	Naphthalene
Certified	Yes	NJ	SHW07.05420	NPW, SCM	GC/MS, Extract or Dir Inj, Capillary	[SW-846 8270C] [SW-846 8270D]	Phenanthrene
Certified	Yes	NJ	SHW07.05430	NPW, SCM	GC/MS, Extract or Dir Inj, Capillary	[SW-846 8270C] [SW-846 8270D]	Pyrene
Certified	Yes	NJ	SHW07.05440	NPW, SCM	GC/MS, Extract or Dir Inj, Capillary	[SW-846 8270C] [SW-846 8270D]	Methyl phenol (4-chloro-3-)
Certified	Yes	NJ	SHW07.05450	NPW, SCM	GC/MS, Extract or Dir Inj, Capillary	[SW-846 8270C] [SW-846 8270D]	Chlorophenol (2-)
Certified	Yes	NJ	SHW07.05460	NPW, SCM	GC/MS, Extract or Dir Inj, Capillary	[SW-846 8270C] [SW-846 8270D]	Dichlorophenol (2,4-)
Certified	Yes	NJ	SHW07.05470	NPW, SCM	GC/MS, Extract or Dir Inj, Capillary	[SW-846 8270D] [SW-846 8270C]	Dimethylphenol (2,4-)
Certified	Yes	NJ	SHW07.05480	NPW, SCM	GC/MS, Extract or Dir Inj, Capillary	[SW-846 8270C] [SW-846 8270D]	Dinitrophenol (2,4-)
Certified	Yes	NJ	SHW07.05490	NPW, SCM	GC/MS, Extract or Dir Inj, Capillary	[SW-846 8270C] [SW-846 8270D]	Dinitrophenol (2-methyl-4,6-)
Certified	Yes	NJ	SHW07.05500	NPW, SCM	GC/MS, Extract or Dir Inj, Capillary	[SW-846 8270C] [SW-846 8270D]	Methylphenol (2-)
Certified	Yes	NJ	SHW07.05510	NPW, SCM	GC/MS, Extract or Dir Inj, Capillary	[SW-846 8270C] [SW-846 8270D]	Methylphenol (4-)
Certified	Yes	NJ	SHW07.05520	NPW, SCM	GC/MS, Extract or Dir Inj, Capillary	[SW-846 8270C] [SW-846 8270D]	Nitrophenol (2-)
Certified	Yes	NJ	SHW07.05530	NPW, SCM	GC/MS, Extract or Dir Inj, Capillary	[SW-846 8270C] [SW-846 8270D]	Nitrophenol (4-)
Certified	Yes	NJ	SHW07.05540	NPW, SCM	GC/MS, Extract or Dir Inj, Capillary	[SW-846 8270C] [SW-846 8270D]	Pentachlorophenol
Certified	Yes	NJ	SHW07.05550	NPW, SCM	GC/MS, Extract or Dir Inj, Capillary	[SW-846 8270C] [SW-846 8270D]	Phenol
Certified	Yes	NJ	SHW07.05560	NPW, SCM	GC/MS, Extract or Dir Inj, Capillary	[SW-846 8270C] [SW-846 8270D]	Trichlorophenol (2,4,5-)
Certified	Yes	NJ	SHW07.05570	NPW, SCM	GC/MS, Extract or Dir Inj, Capillary	[SW-846 8270C] [SW-846 8270D]	Trichlorophenol (2,4,6-)

KEY: AE = Air and Emissions, BT = Biological Tissues, DW = Drinking Water, NPW = Non-Potable Water, SCM = Solid and Chemical Materials

New Jersey Department of Environmental Protection

National Environmental Laboratory Accreditation Program

ANNUAL CERTIFIED PARAMETER LIST AND CURRENT STATUS

Effective as of 08/03/2009 until 06/30/2010

Laboratory Name: EMPIRICAL LABORATORIES, LLC Laboratory Number: TN473 Activity ID: NLC090002
621 MAINSTREAM DR
STE 270
NASHVILLE, TN 37228

Category: SHW07 -- Organic Parameters, Chromatography/MS

Status	Eligible to Report NJ Data	State	Code	Matrix	Technique Description	Approved Method	Parameter Description
Certified	Yes	NJ	SHW07.05590	NPW, SCM	GC/MS, Extract or Dir Inj, Capillary	[SW-846 8270C] [SW-846 8270D]	Methylphenol (3-)
Certified	Yes	NJ	SHW07.05600	NPW, SCM	GC/MS, Extract or Dir Inj, Capillary	[SW-846 8270C] [SW-846 8270D]	Dibenzofuran
Certified	Yes	NJ	SHW07.05691	NPW, SCM	GC/MS, Extract or Dir Inj, Capillary	[SW-846 8270C] [SW-846 8270D]	Dichlorobenzene (1,2-)
Certified	Yes	NJ	SHW07.05692	NPW, SCM	GC/MS, Extract or Dir Inj, Capillary	[SW-846 8270C] [SW-846 8270D]	Dichlorobenzene (1,3-)
Certified	Yes	NJ	SHW07.05700	NPW, SCM	GC/MS, Extract or Dir Inj, Capillary	[SW-846 8270C] [SW-846 8270D]	Dichlorobenzene (1,4-)
Certified	Yes	NJ	SHW07.05720	NPW, SCM	GC/MS, Extract or Dir Inj, Capillary	[SW-846 8270C] [SW-846 8270D]	Benzyl alcohol
Certified	Yes	NJ	SHW07.05750	NPW, SCM	GC/MS, Extract or Dir Inj, Capillary	[SW-846 8270C] [SW-846 8270D]	Pyridine

Category: SHW09 -- Miscellaneous Parameters

Status	Eligible to Report NJ Data	State	Code	Matrix	Technique Description	Approved Method	Parameter Description
Certified	Yes	NJ	SHW09.02000	NPW, SCM	Distillation	[SW-846 9010B, Rev. 2, 12/96]	Cyanide
Certified	Yes	NJ	SHW09.05000	NPW, SCM	Colorimetric, Automated	[SW-846 9012A, Rev. 1, 12/96]	Cyanide
Certified	Yes	NJ	SHW09.13050	NPW, SCM	Ion Chromatography	[SW-846 9056, Rev. 0, 9/94]	Sulfate
Certified	Yes	NJ	SHW09.14000	NPW, SCM	Electrometric	[SW-846 9040B, Rev. 2, 1/95]	pH - waste, >20% water
Certified	Yes	NJ	SHW09.19000	NPW, SCM	Infrared Spectrometry or FID	[SW-846 9060A] [SW-846 9060]	Total organic carbon (TOC)
Certified	Yes	NJ	SHW09.24100	NPW, SCM	Extraction & Gravimetric - LL or SPE	[SW-846 1664A, Rev. 1, 2/99]	Oil & grease - hem
Certified	Yes	NJ	SHW09.29150	NPW, SCM	Ion Chromatography	[SW-846 9056]	Nitrite
Certified	Yes	NJ	SHW09.30150	NPW, SCM	Ion Chromatography	[SW-846 9056, Rev. 0, 12/94]	Nitrate
Certified	Yes	NJ	SHW09.33100	NPW, SCM	Ion Chromatography	[SW-846 9056, Rev. 0, 12/96]	Chloride
Certified	Yes	NJ	SHW09.34150	NPW, SCM	Ion Chromatography	[SW-846 9056, Rev. 0, 12/96]	Fluoride
Certified	Yes	NJ	SHW09.34165	NPW, SCM	LC/MS or LC/MS/MS	[SW-846 6850]	Perchlorate

Category: SHW04 -- Inorganic Parameters

Status	Eligible to Report NJ Data	State	Code	Matrix	Technique Description	Approved Method	Parameter Description
Certified	Yes	NJ	SHW04.03000	SCM	Acid Digestion, Soil Sediment & Sludge	[SW-846 3050B, Rev. 2, 12/96]	Metals
Certified	Yes	NJ	SHW04.03700	SCM	Chromium VI Digestion	[SW-846 3060A, Rev. 1, 12/96]	Metals
Certified	Yes	NJ	SHW04.33500	SCM	AA, Manual Cold Vapor	[SW-846 7471A] [SW-846 7471B]	Mercury - solid waste

KEY: AE = Air and Emissions, BT = Biological Tissues, DW = Drinking Water, NPW = Non-Potable Water, SCM = Solid and Chemical Materials

New Jersey Department of Environmental Protection

National Environmental Laboratory Accreditation Program

ANNUAL CERTIFIED PARAMETER LIST AND CURRENT STATUS

Effective as of 08/03/2009 until 06/30/2010

Laboratory Name: EMPIRICAL LABORATORIES, LLC Laboratory Number: TN473 Activity ID: NLC090002
621 MAINSTREAM DR
STE 270
NASHVILLE, TN 37228

Category: SHW05 -- Organic Parameters, Prep. / Screening

Status	Eligible to Report NJ Data	State	Code	Matrix	Technique Description	Approved Method	Parameter Description
Certified	Yes	NJ	SHW05.04000	SCM	Automatic Soxhlet Extraction	[SW-846 3541, Rev. 0, 9/94]	Semivolatile organics
Certified	Yes	NJ	SHW05.05000	SCM	Ultrasonic Extraction	[SW-846 3550B, Rev. 2, 12/96]	Semivolatile organics
Certified	Yes	NJ	SHW05.06000	SCM	Waste Dilution	[SW-846 3580A, Rev. 1, 7/92]	Organics
Certified	Yes	NJ	SHW05.06100	SCM	Waste Dilution, Volatile organics	[SW-846 3585, Rev. 0, 12/96]	Organics
Certified	Yes	NJ	SHW05.07300	SCM	Closed System Purge & Trap	[SW-846 5035L, Rev. 0, 12/96]	Volatile organics - low conc.
Certified	Yes	NJ	SHW05.07310	SCM	Methanol Extract, Closed System P & T	[SW-846 5035H, Rev. 0, 12/96]	Volatile organics - high conc.
Certified	Yes	NJ	SHW05.12000	SCM	Cleanup-Florisil	[SW-846 3620B, Rev. 2, 12/96]	Semivolatile organics
Certified	Yes	NJ	SHW05.13000	SCM	Cleanup-Silica Gel	[SW-846 3630C, Rev. 3, 12/96]	Semivolatile organics
Certified	Yes	NJ	SHW05.14000	SCM	Cleanup-Gel Permeation	[SW-846 3640A, Rev. 1, 9/94]	Semivolatile organics
Certified	Yes	NJ	SHW05.15000	SCM	Cleanup-Acid/Base Partition	[SW-846 3650B, Rev. 2, 12/96]	Semivolatile organics
Certified	Yes	NJ	SHW05.16000	SCM	Cleanup-Sulfur Removal	[SW-846 3660B, Rev. 2, 12/96]	Semivolatile organics
Certified	Yes	NJ	SHW05.17000	SCM	Cleanup-Sulfuric Acid/KMnO4	[SW-846 3665A, Rev. 1, 12/96]	Semivolatile organics

Category: SHW09 -- Miscellaneous Parameters

Status	Eligible to Report NJ Data	State	Code	Matrix	Technique Description	Approved Method	Parameter Description
Certified	Yes	NJ	SHW09.16000	SCM	Mix with Water or Calcium Chloride	[SW-846 9045C, Rev. 3, 1/95]	pH - soil and waste
Certified	Yes	NJ	SHW09.29000	SCM	Flow-Through Paint Filter, Observation	[SW-846 9095, Rev. 0, 9/86]	Free liquid

Joseph F. Aiello, Chief

KEY: AE = Air and Emissions, BT = Biological Tissues, DW = Drinking Water, NPW = Non-Potable Water, SCM = Solid and Chemical Materials

RECEIVED
AUG 18 2009
BY:

LABORATORY SPECIFICATION

ATTACHMENT NO. 2

STATEMENT OF WORK/PRICE TABLES

TECHNICAL SPECIFICATION FOR LABORATORY SERVICES
NAVAL SURFACE WARFARE CENTER (NSWC) CRANE, INDIANA
COMPREHENSIVE LONG-TERM ENVIRONMENTAL ACTION - NAVY (CLEAN)
CONTRACT N62472-03-D-0057, CONTRACT TASK ORDER (CTO) NO. F271

VERIFICATION SAMPLING
CHEMICAL ANALYSES

1.0 INTRODUCTION

Tetra Tech NUS, Inc. (TtNUS) under CLEAN Contract N62472-03-D-0057 is procuring laboratory analytical services for NSWC Crane, Indiana in support of verification sampling. Requested analyses include antimony, arsenic, chromium, copper, iron, lead, mercury, silver, tin, and zinc. The turn around time for results will be three business days; with standard turnaround time for the data package.

The laboratory performing these analyses must be certified in the state of Indiana. Additionally the laboratory must provide a copy of their NFESC approval letter, all methods requested must be addressed.

The responding laboratory must submit method detection limits (MDLs) and quantitation limits (QLs) for all analyses and matrices requested by filling out the last two columns of Attachment A and including the completed attachment with the bid response. After award, the laboratory will be required to submit Standard Operating Procedures (SOPs) and relevant precision and accuracy limits for all preparation and analytical methods required under this scope of work. The laboratory will also be asked to complete tables for inclusion in the Sampling and Analysis Plan (SAP). The SAP will be prepared according to the Uniform Federal Policy (UFP) for QAPPs (March 2005) and utilize the UFP SAP worksheets 1 through 37.

2.0 SAMPLE INFORMATION

Samples will be shipped to the laboratory during the period beginning August 2009.

The approximate number of samples to be submitted, the type of analyses to be conducted, and the analytical methods to be used are summarized in the attached Table 1.

Field duplicate samples will be submitted with "blinded" identification to the laboratory. The field crew will designate samples (one per twenty samples of like matrices) upon which matrix spike/matrix spike duplicate (organic analyses) and matrix spike/laboratory duplicate (inorganic analyses) are to be performed; additional volumes of these samples will be provided as necessary.

All samples are expected to be of moderate to high contaminant concentrations. The field crew will attempt to identify any potentially high concentration samples.

For the ICP and mercury metal analyses, perform a matrix spike and a laboratory duplicate analysis instead of matrix spike/matrix spike duplicate. If the matrix spike recovery falls outside the control limits and the sample result does not exceed four times the spike added, a post-digestion spike analysis must be performed. In addition, a five-fold dilution analysis (serial dilution) must be performed on the field-designated QC sample. Results for these QC analyses must be summarized in the corresponding CLP-equivalent forms (Attachment B).

3.0 ANALYSIS/REPORTING INFORMATION

Data package deliverables must be submitted as a hardcopy and PDF (2 copies/2 CDs). The analytical requirements and approximate number of samples to be submitted for analysis are detailed in

Table 1. Any analysis and reporting requirements addressed in the DOD Quality Systems Manual (January 2006 or April 2009 depending on current NFESC approval letter) and the requested methods must be followed. Additionally, it is a requirement of TtNUS that the associated PDF data packages for metals analysis must meet Contract Laboratory Program (CLP) format, reporting, and PDF data package deliverable requirements. The PDF data packages for all the remaining analyses must be fully validatable and contain raw data, summary forms for all sample and laboratory method blank data, and summary forms containing all method specific quality control (results, recoveries, relative percent differences, relative standard deviations, and/or percent differences etc.).

Additionally, each PDF data package must contain a summary data package. This summary data package shall consist of only the summary forms (i.e., for CLP Forms 1 through 15 and non-CLP it shall be the CLP-like equivalent of Forms 1 through 15).

Attachment A details the required target compound list and required QL goals that must be met. The laboratory must submit its MDLs and QLs for all analyses and matrices requested by filling out the last two columns of Attachment A and including the completed attachment with the bid response.

Attachment B details the required summary forms for CLP-like data packages, the requirements for the organization, and bookmarking of PDF data packages.

Non-detected metals results must be reported down to the MDLs submitted by the laboratory in Attachment A with the bid response. Soil samples must be reported on a dry-weight basis.

The PDF data package deliverable must contain a detailed case narrative for all analytical fractions. This case narrative must also include the Contract Task Order (CTO) number, the site name, and the TtNUS Project Manager's name. Data from all analytical runs (i.e., original, dilution, re-analysis) must be reported. All soil and sediment matrix sample results shall be reported on an adjusted dry-weight basis. Additionally, the data package deliverable must include the ORIGINAL chain-of-custody form (received with the samples and signed by the laboratory sample custodian).

As stipulated in the CLEAN Master Services Agreement (MSA), Sample Delivery Group (SDG) and fractionally-specific text (TXT) files containing all environmental sample and field quality control blank analysis results must be generated in accordance with the requirements outlined in Attachment C of this specification.

As part of the laboratory case narrative, it is required that the Laboratory Quality Assurance Manager sign an attestation statement verifying that all electronic diskette deliverables exactly match the data summary forms (i.e. Form Is).

Maximum holding time allowances, as defined in the following table, are to be strictly observed. Calculation of holding time is in calendar days and is to begin from the time of collection. The holding times are as follows:

Analyses	Holding Time
Antimony, arsenic, chromium, copper, iron, lead, mercury, silver, tin, and zinc	6 months to analysis except mercury which is 28 days to analysis

These holding times are based on 40 CFR 136, data validation criteria, and method specific requirements, and are measured from date of collection. The holding time criteria depicted apply to all analyses necessary to successfully determine the contaminant level contained in the sample. Hence, the holding time criteria apply to any/all subsequent sample dilutions and re-analyses.

The TtNUS Project Manager for this project is Mr. Steve Ruffing and he must be contacted in the event of any laboratory problems that could impact project deadlines (i.e., late deliverables, technical problems in the lab that could lead to late deliverables.) To ensure good communication it is required that the laboratory's appointed project manager contact Mr. Ruffing once a week for the entire project duration.

The turn around time for results will be three business days; with standard turnaround time for the data package. Result must be emailed to Mr. Ruffing at below email address. Full hardcopy data package to follow in 14 calendar days.

Contact information for Mr. Ruffing is as follows:

Tetra Tech NUS, Inc.
Foster Plaza 7
661 Andersen Drive
Pittsburgh, PA 15220
Phone: 412-921-8989
Fax: 412-921-4040
e-mail: steve.ruffing@tetratech.com

Analytical data turnaround times are to be measured from receipt of each sample shipment. All PDF analytical data package (2 CDs) and associated electronic (TXT) deliverables are due to the TtNUS Sample Management Coordinator, Ms. Tobrena Skeen, within the expedited MSA turnaround term of 14 calendar days from receipt of the last sample in a Sample Delivery Group (SDG). Additionally all SDGs must contain 20 samples. The frequency in which SDGs contain less than 20 samples should be minimal. All PDF data packages and electronic deliverables must be received at the same time or the deliverable will be considered incomplete and payment deductions may be imposed. **Additionally the laboratory Project Manager must fax copies of chain of custody forms to Ms. Skeen as samples are received by the laboratory.**

Contact information for Ms. Skeen follows:

Tetra Tech NUS, Inc.
Foster Plaza 7
661 Andersen Drive
Pittsburgh, PA 15220
Phone: 412-921-8582

Fax: 412-921-4040
e-mail: tobrena.skeen@tetratech.com

4.0 PERIOD OF PERFORMANCE/BOTTLEWARE INFORMATION

All samples will be shipped to the laboratory via express carrier within 48-hours of collection. Please circle the Yes or No at the bottom of Table 1 which will indicate if the laboratory will provide courier service at no extra charge. Samples will be shipped to the laboratory the period **beginning August 2009**.

Shipment of bottleware to support the entire project will be coordinated at a later date.

The laboratory is to provide all necessary sample containers **(plus approximately 10% extra for breakage)**. All sample containers must meet ICHEM series 300 cleanliness criteria (or equivalent), and documentation of certified cleanliness must be provided. All of the appropriate sample bottleware must be pre-preserved. The bottleware must be shipped to the designated location in Coleman-like coolers. **The laboratory must also provide any extra coolers needed for return shipment of sample to the laboratory for analysis.** The laboratory is also requested to provide a packing slip indicating the analytical parameters for which each container type is designated, sample labels, and chain-of-custody forms. The laboratory is to dispatch proper bottleware for the collection of additional soil, per sampling location, for dry-weight determination.

The laboratory must provide Material Safety Data Sheets (MSDSs) for all preservatives sent with each bottleware shipment to the field. MSDSs must be representative of the chemicals provided as preservatives with regard to mixtures and/or purity of the chemicals. For example if a 35% sulfuric acid solution is the preservative, the MSDS provided should be for 35% sulfuric acid solution not 96% sulfuric acid.

5.0 ADDITIONAL COMMENTS/CONTACTS

Within a laboratory, internal transfers of samples, extracts, and digestates must be accomplished and documented as controlled custody transfers. The laboratory must maintain documentation that supports an unbroken chain of custody for samples, digestates and extracts from time of receipt or production in the laboratory until disposal.

The laboratory is to provide a minimum of 60 days storage of sample extracts and 60 days storage of intact sample aliquots, as stipulated in the MSA. **Additionally, the laboratory must store hardcopy and/or PDF data packages for 5 years.**

All analyses conducted under this subcontract assignment are to be performed at the solicited facility only. The laboratory is not permitted to lower-tier subcontract these analyses, or analyze these samples at a corporate facility other than the facility stipulated without prior notification and consent from the CLEAN Subcontracting Officer.

The unit cost for analysis is to include compensation for containers, preservatives, coolers, shipping costs, storage, disposal, and laboratory quality control analyses (such as matrix spike, matrix spike duplicate, laboratory duplicate, and laboratory control sample analyses.) These items are not to be billed as separate line items.

Technical, quality assurance, and data format concerns are to be directed to Mr. Edward Sedlmyer at 412-921-8704 or via e-mail edward.sedlmyer@tetratech.com. Mr. Sedlmyer must be contacted and informed of any difficulties encountered during the conduct of the requested analyses.

Questions regarding electronic diskette deliverable concerns are to be directed to Ms. Amy Thomson at 412-921-8182 or via e-mail amy.thomson@tetratech.com. Ms. Thomson must be contacted and informed of any difficulties encountered preparing the required electronic deliverables.

Contract concerns, and response to this solicitation, are to be directed to:

Ms. Meg Price
CLEAN Subcontracting Officer
Tetra Tech NUS, Inc.
234 Mall Boulevard, Suite 260
King of Prussia, PA 19406
Phone: 610-491-9688
Fax: 610-491-9645
e-mail: meg.price@tetratech.com

Triplicate copies of invoices associated with the analyses contracted herein are to be submitted to the attention of the Accounting Supervisor:

Tetra Tech NUS, Inc.
661 Andersen Drive, Foster Plaza 7
Pittsburgh, PA 15220
Phone: 412-921-8506
Fax: 412-921-4040

Please confirm the laboratory's ability to perform the methodologies requested at the analyte detection limits indicated. Also confirm available laboratory capacity, and complete/confirm the costing information indicated in Table 1. **All costing information must reflect the terms and conditions established by the 2009 CLEAN MSA.**

TABLE 1
NUMBER OF SAMPLES/ANALYTICAL METHODS
NAVAL SURFACE WARFARE CENTER (NSWC) CRANE, INDIANA
CONFIRMATION SAMPLING

Matrix	Parameter	Method	# Samples	Unit Price	Total Cost
Solid	Antimony, arsenic, chromium, copper, iron, lead, mercury, silver, tin, and zinc	SW-846 6010B or 6010C and SW-846 7471A or B	48	$	$

TOTAL COST $

Can the laboratory provide sample pick-up on site? YES or NO (circle one)
If yes is there an additional charge and what is that charge?_____
Name of Laboratory_____

Signature_____

ATTACHMENT A
Required Target Compound Lists and Quantitation Limits

Matrix: Soil
Analytical Group: Metals

Analyte	CAS Number	Project Action Limit (mg/kg)	Project Action Limit Reference[2]	Project Quantitation Limit Goal (mg/kg)	Laboratory-Specifc	
					Quantitation Limit (mg/kg)	Method Detection Limit (mg/kg)
Antimony	7440-36-0	31	IMWP			
Arsenic	7440-38-2	10.2	IMWP			
Chromium	7440-47-3	26	IMWP			
Copper	7440-50-8	28	IMWP			
Iron	7439-89-6	40,800[(1)]	IMWP			
Lead	7439-92-1	400	IMWP			
Mercury	7439-97-6	2.1	IMWP			
Silver	7440-22-4	4.2	IMWP			
Tin	7440-31-5	10	IMWP			
Zinc	7440-66-6	49	IMWP			

1 Surface and subsurface soil.
2 Interim Measures Work Plan for SWMU 12 Battery Dump Site, NSWC Crane.

ATTACHMENT B
Summary Form Requirements for PDF Deliverable and PDF Data Package Deliverables

PDF DATA PACKAGE DELIVERABLE REQUIREMENTS

The laboratory is to provide 2 compact disks (CDs) containing a PDF file in the following format:

1. Table of Contents
2. Case Narrative
3. Chain-of-Custody
4. Data Summary Package (contains summary of all CLP or CLP like Forms 1 through 15 per analytical fraction)
5. Analytical Fractions (VOA, SVOC, General Chemistry, etc.)
a. QC Summary (summary of all CLP or CLP like Forms 1 through 15 for a particular analytical fraction)
b. Raw Sample Data (includes all sample dilutions, sample re-analyses, QC samples, etc.)
c. Calibration Data (includes all initial and continuing calibrations)
d. Miscellaneous (includes extraction forms, IDLs, MDLs, etc.)

Each of the above sections should be bookmarked in the PDF for easy access.

Summary Form Requirements for PDF data package deliverable for non-CLP Methods:

The following summary forms are required as part of the data package deliverable for SW-846 6010 series for metals:

Results Report - must present all information presented on CLP FORM I.
Initial and Continuing Calibration Summary -must present all information presented on CLP FORM 2A.
CRDL Summary - must present all information presented on CLP FORM 2B.
Blanks - must present all information presented on CLP FORM 3.
ICP Interference Check Sample Summary - must present all information presented on CLP FORM 4.
Matrix Spike Summary - must present all information presented on CLP FORM 5A.
Post Digestion Spike - must present all information presented on CLP FORM 5B.
Lab Duplicate Results - must present all information presented on CLP FORM 6.
LCS Summary - must present all information presented on CLP FORM 7.
MSA Summary (Method of Standard Addition) - must present all information presented on CLP FORM 8.
ICP Serial Dilution Summary - must present all information presented on CLP FORM 9.
Detection Limits - must present all information presented on CLP FORM 10.
Linear range – must present all information presented on CLP FORM 12
Prep Log - must present all information presented on CLP FORM 13.
Analysis Run Log - must present all information presented on CLP FORM 14.
ICP-MS Tune – must present all information on CLP FORM 14 (ILM05.4)
ICP/MS Internal Standard Relative Intensity Summary - must present all information presented on CLP FORM 15 (ILM05.4).

Also must include: Instrument Calibration Records, Chain-of-Custody Forms, and Case Narrative.

ATTACHMENT C
ELECTRONIC DATA DELIVERABLE REQUIREMENTS

ELECTRONIC DATA FORMAT REQUIREMENTS

1.0 INTRODUCTION

The laboratory is to submit text-based tab delimited EDD files for each SDG using Tetra Tech's laboratory data checker explained below. The files must be in the format specified in this Attachment. Additional information such as laboratory name, project name, fractions included, project number, site name/number, laboratory contact person and any specific comments related to the EDD should be included in the comments section of the EDD Submittal page.

The RESULT for nondetects should be populated with the project-specific sample quantitation reporting limits (i.e., either the sample quantitation limit or method detection limit, as specified in Section 3.0 of this scope of work. Any corrections made to the hardcopy data must also be made to the electronic file. Appropriate qualifiers as identified by the analytical protocol must also be designated; laboratory QC non-compliance codes are not to be depicted.

Tetra Tech's electronic EDD format follows the ADAPT structure and requires the A1 and A3 files. The A2 file is only required if the project is using ADAPT; and, for non-ADAPT EDD submittals the A2 file may be omitted. The EDD consists of separate, tab-delimited ASCII text files. Each file corresponds to a database table. The tables are identified as the Analytical Results Table (A1) and Sample Analysis Table (A3). A separate set of text files must be created and submitted for each sample delivery group (SDG). The files must be identified to correspond to the (A1) table and the (A3) table. The file naming convention is: the Sample Delivery Group (SDG) followed by the table identifier (A1 or A3), followed by the ".txt" extension. The file names must not contain spaces or special characters. For example, the EDD file names for a laboratory-reporting batch identified as SDG001 would be as follows:

SDG001A1.txt
SDG001A3.txt

On certain projects Tetra Tech will utilize the ADAPT Electronic Data Validation software, which will require the laboratory to use the ADAPT electronic data deliverable checker software prior to submitting the files through Tetra Tech's laboratory data checker (this will be clearly specified in the Tetra Tech laboratory statement of work). The ADAPT checker software can be downloaded from Laboratory Data Consultants' web site: http://www.lab-data.com. For projects which Tetra Tech is using the ADAPT software, Tetra Tech will provide the laboratory with the project library. The laboratory is not permitted to modify the project library. ADAPT projects will require the laboratory to export all three checked files (A1, A2, and A3) from the ADAPT software and submit them through Tetra Tech's laboratory data checker. **ADAPT error logs generated must be included with the electronic PDF data validation package and cannot be submitted through the laboratory data checker.**

The values reported in the EDD text files must agree exactly with the final values reported on the PDF data package sample result summaries. The details of file naming conventions, data structure and data checker use are discussed below.

Analytical Results Table (A1 File)

The Analytical Results table contains analytical results and related information for target analytes in field samples and associated laboratory quality control samples (excluding calibrations and tunes). Field samples and laboratory method blanks must report a result record for each analyte reported within a method. Laboratory control samples (LCS and LCSD) and matrix spike samples (MS and MSD) must report a result record for every analyte specified as a spiked analyte in the laboratory statement of work. Table A1 in this document lists the field names and data type descriptions for the Analytical Results Table (A1).

Lab Instrument Table (A2 File)

A2 file is only required if the project is using ADAPT. In all other EDD submittals, the A2 file may be omitted. Laboratories should refer to the ADAPT User Guide for populating the A2 Table.

Sample Analysis Table (A3 File)

The Sample Analysis table contains information specific to field environmental samples and laboratory quality control analyses (excluding calibrations and tunes). A sample record must exist for each sample/method/matrix/analysis type combination. Table A3 in this document lists the field names and data type descriptions for the Sample Analysis Table (A3).

All electronic data deliverables are due within the same time established for the associated hardcopy data packages.

In addition, the laboratory QC officer must read and sign a copy of the Quality Assurance Review Form displayed on the next page of this Attachment. Electronic deliverables are not considered to be complete without the accompanying Quality Assurance Review Form.

I _____, as the designated Quality Assurance Officer, hereby attest that all electronic deliverables have been thoroughly reviewed and are in agreement with the associated hardcopy data. The enclosed electronic files have been reviewed for accuracy (including significant figures), completeness and format. The laboratory will be responsible for any labor time necessary to correct enclosed electronic deliverables that have been found to be in error. I can be reached at
(____)_____if there are any questions or problems with the enclosed electronic deliverables.

Signature:_____ Title: _____Date: _____

2.0 EDD Field Properties

Tables A1 and A3 in this document specify the EDD field properties. Laboratories should refer to the ADAPT User Guide for populating the A2 Table. These include the field name, sequence order, field description, data type/length and reporting requirement for each field. Fields in the EDD **must** be sequenced according to the order that they appear below in Tables A1 and A3. For example, in the Analytical Results table (A1), the field "ClientSampleID" will always be the first piece of information to start every new line of data (or database record), followed by the field "LabAnalysisRefMethodID", "AnalysisType", etc.

When creating an EDD as a text file, use the ASCII character set in a file of lines terminated by a carriage return and line feed. No extra characters are allowed at the end of a line, after the carriage return and line feed. Enclose each data value with double quotes (text qualifier) and separate each field value with a **tab** character (tab delimiter). Data fields with no information (null) may be represented by two consecutive tabs. For example, in the Sample Analysis table, since the "Collected", "ShippingBatchID", and "Temperature" fields do not apply to laboratory generated QA/QC samples, the record for a Laboratory Control Sample by Method 8270C would be entered as follows. Note that the first two fields ("ProjectNumber" and "ProjectName") are omitted in this example.

…"LCSW100598" "AQ" "LCSW100598" "LCS" "8270C",…etc.

If a field is populated with less than the maximum allowed number of characters, do not pad the values with leading or trailing spaces. In the above example, although the "MatrixID" field can accommodate up to 10 characters, only 2 characters were entered in this field. **Do not include the delimiter (tab character) within any of the field values.** Example EDD files may be downloaded from the LEDD Checker application.

An example database shall be sent for review prior to the first electronic deliverable in the required .txt format. The example file will be examined for completeness and comments will be sent to the laboratory. Any questions regarding the electronic deliverable should be directed to LabSupport@tetratech.com.

Table A1
Field Descriptions for the Analytical Results Table (Table A1)
Contains laboratory test results and related information for field and QC samples (excluding instrument calibrations) on an analyte level for environmental chemistry including radiochemistry

Field Name	Field Name Description	Field Type	Field Length	Required Value
ClientSampleID	Client or contractor's identifier for a field sample If a sample is analyzed as a laboratory duplicate, matrix spike, or matrix spike duplicate, append suffixes DUP, MS and MSD respectively to the Client Sample ID with no intervening spaces or hyphens (i.e. MW01DUP, MW01MS, and MW01MSD). For Method Blanks, LCS, and LCSD enter the unique LaboratorySampleID into this field. Do not append suffixes to the ClientSampleID for dilutions, reanalyses, or re-extracts (the AnalysisType field is used for this distinction). For example, MW01DL and MW01RE are not allowed. Parent sample records must exist for each MS and MSD. If an MS/MSD is shared between two EDDs, records for the MS/MSD and its parent sample must exist in the Analytical Results table for both EDDs.	Text	25	X
LabAnalysisRefMethodID	Laboratory reference method ID. The method ID may be an EPA Method number or a Lab Identifier for a method such as a SOP Number, however; method ID is specified by the project. The method ID must be entered into the standard list.	Text	25	X
AnalysisType	Defines the analysis type (i.e., Dilution, Reanalysis, etc.). This field provides distinction for sample result records when multiple analyses are submitted for the same sample, method, and matrix; for example dilutions, re-analyses, and re-extracts.	Text	10	X
LabSampleID	Laboratory tracking number for field samples and lab generated QC samples such as method blank, LCS, and LCSD. There are no restrictions for the LabSampleID except for field length and that the LabSampleID must be distinct for a given field sample or lab QC sample and method. Suffixes may be applied to the LabSampleID to designate dilutions, reanalysis, etc.	Text	25	X
LabID	Identification of the laboratory performing the analyses.	Text	7	X
ClientAnalyteID	CAS Number or unique client identifier for an analyte	Text	12	X

Table A1
Field Descriptions for the Analytical Results Table (Table A1)
Contains laboratory test results and related information for field and QC samples (excluding instrument calibrations) on an analyte level for environmental chemistry including radiochemistry

Field Name	Field Name Description	Field Type	Field Length	Required Value
	or isotope. If a CAS Number is not available, use a unique identifier provided by the client or contractor. The ClientAnalyteID for a particular target analyte or isotope should be specified by the project and must exist in the standard value tables for Analytes. For the LCS, LCSD, MS, and MSD, it is only necessary to report the compounds designated as spikes in the library (and surrogates for organic methods.) For TICs from GC/MS analyses, enter the retention time in decimal minutes as the Client Analyte ID.			
AnalyteName	Chemical name for the analyte or isotope. The project specifies how an analyte or isotope is named. The analyte name must be associated to a ClientAnalyteID in the standard values table for Analytes (excluding compounds designated as TIC's).	Text	60	X
Result	Result value for the analyte or isotope. Entries must be numeric. For non-detects of target analytes or isotopes and spikes, **do not enter "ND" or "0". Do not leave this field blank**. If an analyte or spike was not detected, enter the reporting limit value corrected for dilution and percent moisture as applicable. Do not enter "0"	Numeric (1)	20(6)	X
ResultUnits	The units defining how the values in the Result, DetectionLimit, and ReportingLimit fields are expressed. For radiochemistry this also includes how the value in the Error field is expressed.	Text	10	X
LabQualifiers	A string of single letter result qualifiers assigned by the lab based on client-defined rules and values. The "U" Lab Qualifier must be entered for all non-detects. Other pertinent lab qualifiers may be entered with the "U" qualifier. Order is insignificant. Lab qualifiers other than those listed in the standard	Text	7	Q

Table A1
Field Descriptions for the Analytical Results Table (Table A1)
Contains laboratory test results and related information for field and QC samples (excluding instrument calibrations) on an analyte level for environmental chemistry including radiochemistry

Field Name	Field Name Description	Field Type	Field Length	Required Value
	values table may be used. If so, these must be added to the standard value table in the application.			
DetectionLimit	For radiochemistry methods, the minimum detectable activity for the isotope being measured. For all other methods: The minimum detection limit value for the analyte being measured.	Numeric (1)	10(6)	X
DetectionLimitType	Specifies the type of detection limit (i.e., MDA, MDL, IDL, etc.).	Text	10	X
RetentionTime or Error	For radiochemistry methods only, enter the 2 Sigma Counting Errors. The units for error are entered in the ResultUnits field. For GC/MS methods only, enter the time expressed in decimal minutes between injection and detection for GC/MS TICs only For target analytes in all other methods, leave this field blank. Note: GC retention times are not evaluated at this time.	Text	5	T
AnalyteType	Defines the type of result, such as tracer, surrogate, spike, or target compound.	Text	7	X
PercentRecovery	For radiochemistry methods: The tracer yield, if applicable. For all other analytical methods: The percent recovery value of a spiked compound or surrogate. If the spike or surrogate was not recovered because of dilution, enter “DIL”. If a spike or surrogate was not recovered because of matrix interference, enter “INT”. If a spike or surrogate was not recovered because it was not added to the sample, enter “NS”.	Numeric (1)	5(3)	R
RelativePercentDifference	The relative percent difference (RPD) of two QC results, such as MS/MSD, LCS/LCSD, and Laboratory Duplicates. Report RPD in Laboratory Duplicate, LCSD, and MSD records only.	Numeric (1)	5(3)	D
ReportingLimit	Reporting limit value for the measured analyte or isotope Factor in the dilution factor and percent moisture correction, if applicable. The Reporting Limit for each analyte and matrix in a given method is specified in	Numeric (1)	10(6)	X

Table A1
Field Descriptions for the Analytical Results Table (Table A1)
Contains laboratory test results and related information for field and QC samples (excluding instrument calibrations) on an analyte level for environmental chemistry including radiochemistry

Field Name	Field Name Description	Field Type	Field Length	Required Value
	the project library or QAPP.			
ReportingLimitType	Specifies the type of reporting limit (i.e., CRQL, PQL, SQL, RDL, etc). The Reporting Limit Type for each method and matrix is specified in the project library or QAPP.	Text	10	X
ReportableResult	This field indicates whether or not the laboratory chooses an individual analyte or isotope result as reportable. Enter "YES" if the result is reportable. Enter "NO" if the result is not reportable. If only one analysis is submitted for a particular sample and method, enter "YES" for all target compounds (where Analyte Type = TRG). For GC/MS methods enter yes for tentatively identified compounds (where Analyte Type = TIC). If two or more analyses are submitted for a particular sample and method (i.e. initial analysis, reanalysis and/or dilutions), enter "YES" from only one of the analyses for each target compound. For example: a sample was run a second time at dilution because benzene exceeded the calibration range in the initial, undiluted analysis. All target analytes are reported in each analysis. For the initial analysis, (Analysis Type = RES), enter "NO" for benzene and enter "YES" for all other compounds. For the diluted analysis (Analysis Type = DL), enter "YES" for benzene and enter "NO" for all other compounds. For TICs (Analyte Type = TIC), if more than one analysis is submitted for a particular sample and method, choose only one of the analyses where Reportable Result = YES for all TICs. For example, a sample was run a second time because one or more target compounds exceeded the calibration range in the undiluted analysis. Choose a particular analysis and enter "YES" for all TICS. In the other analysis enter "NO" for all TICs. Note that it is not necessary to report the full target analyte list for the initial result, dilution, re-analysis, or re-extraction. However, each target analyte must be reported YES once and once only in the case of multiple analyses for a given sample, method, and matrix. In the case of organics, all surrogates must be reported for all analyses submitted for a given sample, method, and, matrix.	Text	3	X

Table A1
Field Descriptions for the Analytical Results Table (Table A1)
Contains laboratory test results and related information for field and QC samples (excluding instrument calibrations) on an analyte level for environmental chemistry including radiochemistry

Field Name	Field Name Description	Field Type	Field Length	Required Value
SpkConcnAdded	The spike added. This value must be reported in the same units as the result. Where (SA) in the following equation: % Recovery = (SSA-SC)/SA x 100% where : SSA is the spiked sample concentration (amount) after spiking. SC is the sample concentration (amount) before spiking. SA is the the expected increase in sample concentration (amount) as a result of spiking. This value must incorporate all correction factors such as dilution factor and moisture content that are applied to the spiked sample when computing the spiked sample concentration or amount.	Numeric (1)	10(6)	R
SpkParentSampleID	The sampleID of a sample (often called the original sample) that receives a spike aliquot to form a spiked sample such as a matrix spike. This is not the same as the ID of the spiked sample (such as a matrix spike) after spiking. The result for SpkParentSampleID and the result (i.e., SpkConcnAdded) for the spiked sample are used to compute percent recovery of the analyte.	Text	25	R
SamplePrepInitial	The initial sample preparation volume in liters (L) for aqueous samples or grams (g) for solid samples.	Numeric (1)	20(6)	
SamplePrepFinal	The final sample preparation volume in liters (L) for aqueous samples or grams (g) for solid samples.	Numeric (1)	20(6)	
Comment	Add any comments or additional information specific to the analyte test result data record.	Text	200	

X Required field.
Q Only required if laboratory has qualified the result.
T Only required for tentatively identified compounds by GC/MS.
R Only required if Analyte_Type =”SPK” or “SURR”.
D Only required for spiked compounds in the LCSD and MSD.
(1) Field Length indicates decimal precision in parenthesis. For example, 5(2) = a total width of 5 numbers including a maximum of 2 decimal places.

Table A3
Field Description for the Sample Analysis (Table A3)
This table contains information related to analyses of field samples and laboratory QC samples (excluding calibrations and tunes) on a sample level for environmental chemical analyses including radiochemistry

Field Name	Field Name Description	Field Type	Field Length	Required Value
ProjectNumber	Project number assigned by the client.	Text	30	X
ProjectName	Project name assigned by the client.	Text	90	X
ClientSampleID	Client or contractor's identifier for a field sample If a sample is analyzed as a laboratory duplicate, matrix spike, or matrix spike duplicate, append suffixes DUP, MS and MSD respectively to the Client Sample ID with no intervening spaces or hyphens (i.e. MW01DUP, MW01MS, and MW01MSD). For Method Blanks, LCS, and LCSD enter the unique LaboratorySampleID into this field Do not append suffixes to the ClientSampleID for dilutions, reanalyses, or re-extracts (the Analysis_Type field is used for this distinction). For example, MW01DL and MW01RE are not allowed Parent sample records must exist for each MS and MSD. If an MS/MSD is shared between two EDDs, records for the MS/MSD and its parent sample must exist in the Sample Analysis table for both EDDs.	Text	25	X
Collected	Date and Time of sample collection. Refer to the date/time format at the end of this table. Leave this field blank for Method Blank, LCS, and LCSD	Date/ Time	16*	C
MatrixID	Sample matrix (i.e., AQ, SO, etc.)	Text	10	X
LabSampleID	Laboratory tracking number for field samples and lab generated QC samples such as method blank, LCS, and LCSD. There are no restrictions for the LabSampleID except field length and that the LabSampleID must be unique for a given field sample or lab QC sample and method.	Text	25	X
QCType	This record identifies the type of quality control sample QC (i.e., Duplicate, LCS, Method Blank, MS, or MSD). For regular environmental samples, populate this field with "NM".	Text	10	X
ShippingBatchID	Unique identifier assigned to a cooler or shipping container used to transport client or field samples. Links all samples to a cooler or shipping container. No	Text	25	C

Table A3
Field Description for the Sample Analysis (Table A3)
This table contains information related to analyses of field samples and laboratory QC samples (excluding calibrations and tunes) on a sample level for environmental chemical analyses including radiochemistry

Field Name	Field Name Description	Field Type	Field Length	Required Value
	value is required for method blanks, LCS, and LCSD.			
Temperature	Temperature (in centigrade degrees) of the sample as received. This field is not required for radiochemistry methods.	Numeric (1)	10(6)	C
LabAnalysisRefMethodID	Laboratory reference method ID. The method ID may be an EPA Method number or laboratory identifier for a method such as a SOP number, however; values used for Laboratory Method IDs are specified by the project and must in the in standard value list for method IDs.	Text	25	X
PreparationType	Preparation Method Number (i.e., 3010A, 3510C, 3550C, 5030B, etc.) For analytical procedures that do not have a specific preparation method number, use “Gen Prep”.	Text	25	X
AnalysisType	Defines the type of analysis such as initial analysis, dilution, re-analysis, etc. This field provides distinction for sample records when multiple analyses are submitted for the same sample, method, and matrix, for example: dilutions, re-analyses, and re-extracts.	Text	10	X
Prepared	For radiochemistry leave this field blank. For all other methods enter the date and time of sample preparation or extraction. Refer to the date/time format at the end of this table.	Date/ Time	16*	X
Analyzed	Date and time of sample analysis. Refer to the date and time format at the end of this table.	Date/ Time	16*	X
LabID	Identification of the laboratory performing the analysis.	Text	7	X
QCLevel	The level of laboratory QC associated with the analysis reported in the EDD. If only the Analytical Results Table (A1) and the Sample Analysis Table (A3) information are submitted for the sample, enter “COA”. If the Laboratory Instrument Table (A2) information is also submitted for the sample, enter “COCAL”	Text	6	X
ResultBasis	Indicates whether results associated with this sample records are reported as wet or percent moisture corrected. This field is only required for soils and sediments. Enter “WET” if results are not corrected for	Text	3	X

Table A3
Field Description for the Sample Analysis (Table A3)
This table contains information related to analyses of field samples and laboratory QC samples (excluding calibrations and tunes) on a sample level for environmental chemical analyses including radiochemistry

Field Name	Field Name Description	Field Type	Field Length	Required Value
	percent moisture. Enter "DRY" if percent moisture correction is applied to results.			
TotalOrDissolved	This field indicates if the results related to this sample record are reported as a total or dissolved fraction. This field is only required for metal methods. For all other methods leave this field blank.	Text	3	X
Dilution	Dilution of the sample aliquot. Enter "1" for method blanks, LCS, and LCSD, or if the field samples was analyzed without dilution.	Numeric (1)	10(6)	X
HandlingType	Indicates the type of leaching procedure, if applicable (i.e., SPLP, TCLP, WET). Leave this field blank if the sample analysis was not performed on a leachate.	Text	10	L
HandlingBatch	Unique laboratory identifier for a batch of samples prepared together in a leaching procedure (i.e., SPLP, TCLP, or WET preparation). The HandlingBatch links samples with leaching blanks. Leave this field blank if the sample analysis was not performed on a leachate	Text	12	L
LeachateDate	Date and time of leaching procedure (i.e., date for SPLP, TCLP, or WET preparation). Refer to the date and time format at the end of this table. Leave this field blank if the sample analysis was not performed on a leachate	Date /Time	16*	L
Percent_Moisture	Percent of sample composed of water. Enter for soil and sediment samples only.	Numeric (1)	10(6)	X
MethodBatch	Unique laboratory identifier for a batch of samples of similar matrices analyzed by one method and treated as a group for matrix spike, matrix spike duplicate, or laboratory duplicate association The method batch links the matrix spike and/or matrix spike duplicate or laboratory duplicates to associated samples. Note the MethodBatch association may coincide with the PreparationBatch association. The MethodBatch is specifically used to link the MS/MSD and/or DUP to associated samples.	Text	12	X
PreparationBatch	Unique laboratory identifier for a batch of samples	Text	12	X

Table A3
Field Description for the Sample Analysis (Table A3)
This table contains information related to analyses of field samples and laboratory QC samples (excluding calibrations and tunes) on a sample level for environmental chemical analyses including radiochemistry

Field Name	Field Name Description	Field Type	Field Length	Required Value
	prepared together for analysis by one method and treated as a group for method blank, LCS and LCSD association. The PreparationBatch links method blanks and laboratory control samples (blank spikes) to associated samples. Note, the PreparationBatch association may coincide with the MethodBatch association but the PreparationBatch specifically links the Method Blank and LCS to associated samples.			
RunBatch	For radiochemistry methods leave this field blank. For all other methods the RunBatch is the unique identifier for a batch of analyses performed on one instrument under the control of one initial calibration and initial calibration verification. The RunBatch links both the initial calibration and initial calibration verification to subsequently analyzed and associated continuing calibrations, field samples, and QC analyses. For GC/MS methods, the RunBatch also links a BFB or DFTPP tune. A distinct RunBatch must used with every new initial calibration within a method The value entered in this field links a particular sample/method/analysis type record to a set of associated initial calibration and initial calibration verification records from Table A2. This field is only required if the A2 table is included with the EDD.	Text	12	X
AnalysisBatch	For radiochemistry methods leave this field blank. For all other methods the AnalysisBatch is the unique identifier for a batch of analyses performed on one instrument and under the control of a continuing calibration or continuing calibration verification. The AnalysisBatch links the continuing calibration or calibration verification to subsequently analyzed and associated field sample and QC analyses. For GC/MS methods, the AnalysisBatch also links the BFB or DFTPP tune. A distinct AnalysisBatch must be used with every new continuing calibration or continuing calibration verification within a method The value entered in this field links a particular sample/method/analysis type record to a set of associated continuing calibration records in the Laboratory Instrument table.	Text	12	X

Table A3
Field Description for the Sample Analysis (Table A3)
This table contains information related to analyses of field samples and laboratory QC samples (excluding calibrations and tunes) on a sample level for environmental chemical analyses including radiochemistry

Field Name	Field Name Description	Field Type	Field Length	Required Value
	This field is only required if the A2 table is included with the EDD.			
LabReportingBatch	Unique laboratory identifier for the EDD. This is equivalent to the sample delivery group, lab work number, login ID, etc. The LabReportingBatch links all records in the EDD reported as one group. The value entered in this field must be the same in all records.	Text	12	X
LabReceipt	Date and time the sample was received in the lab. A time value of 00:00 may be entered. Refer to the date/time format at the end of this table.	Date/ Time	16*	X
LabReported	Date and time hard copy reported delivered by the lab. A time value of 00:00 may be entered. Refer to the date/time format at the end of this table.	Date/ Time	16*	X
Comment	Add any comments or additional information specific to the sample analysis data record.	Text	200	

C Only required for regular samples, duplicates and MS/MSDs.
L Only required if analysis performed is SPLP, TCLP or WET extracts.
X Required field.
(1) Field Length indicates decimal precision in parenthesis. For example, 5(2) = a total width of 5 numbers including a maximum of 2 decimal places.
* Format Date and Time as MM/DD/YYYY hh:mm; where MM = two digit month, DD = two digit day, and YYYY = four digit year, hh = hour in 24 hour format, and mm = minutes.

3.0 Laboratory Data Checker

The Laboratory Data Checker is a web-based application that will review Laboratory Electronic Data Deliverables (LEDDs) for adherence to Tetra Tech's EDD format requirements. EDDs will be reviewed for elements such as missing data and/or columns of data, and compliance of the data within each column to the required data types/lengths. Once an EDD passes through the checker with no errors, it must be submitted to Tetra Tech through the LEDD Checker application.

Access to the LEDD Checker application will be provided by an initial registration/approval process. An Information Systems Group (ISG) Administrator will approve requests for access**.** To access the site or begin the registration process, visit the ISG web site at http://isg.ttnus.com and select the "Laboratory Checker" link on the left of the home page. Registered users may access the checker immediately by logging in to the system using theircredentials. New users must select the "Register" button and provide all of the requested information**.**

After completing all fields on the registration form, select the "Submit" button to complete the request process. Upon verification by an ISG Administrator, an email notification will be sent verifying the user ID, password and account status. Forgotten passwords may be retrieved by using the "Forgot password?" link on the login page. Note that the email address that was provided for registration or password retrieval is the user ID and must be a valid e-mail address.

The general process for submitting EDD files through the LEDD Checker involves a 3-stage process that includes an upload stage, an error checking stage and a submittal stage.

Log into the LEDD Checker by typing your login credentials and select the "Login" button. The LEDD Checker home page provides a general overview of the checker functionality and EDD file format requirements. At the bottom of the home page, example EDDs are provided that may be viewed or downloaded. To download the files, right click on the link and select "Save target as" from the menu. Each LEDD Checker page includes a navigation bar with links to return to the home page or continue the checking and submittal process. Users should **NOT** use the back or forward buttons on the browser, instead use the links provided in the application to navigate through the site.

Detailed information regarding EDD preparation, formatting requirements and text file naming conventions are provided in the Electronic Data Format Requirements Section of the Laboratory SOW.

Begin the upload stage by selecting the "Upload/Check Files" link on the home page. Follow the steps on the upload page starting with the selection of the laboratory name that corresponds to your organization. If your organization is not listed, contact LabSupport@tetratech.com, and provide a full description of your organization name, contact information and include "Laboratory Contractor ID Request" in the subject line. An ISG Administrator will respond to the request via e-mail.

Load the appropriate A1, A2, or A3 target EDD files by clicking the "Browse" button next to each data table input box. A file browser dialog will appear allowing files to be selected from a local or network drive. After the EDD files are loaded, click the "Upload" button to complete the upload stage. Note that each table may be uploaded and checked separately; however, a minimum of the A1 and A3 files are required in order to submit the EDDs.

If the file upload was successful, the checking page will immediately load. Begin the checking stage by selecting the "Check Files" button. The LEDD Checker will begin validating the EDD files for compliance. Depending on file size and network activity the validation process may take several minutes. The progress should be displayed in the information bar at the bottom of the browser window. **Do not** select the "Check Files" button again or otherwise use the browser during this process. Other applications may be used; however, note that the LEDD Checker may not sit idle for more than 30 minutes. If the time is exceeded a new session must be started in a new browser window.

Any errors will be processed and returned on the error page. The following general errors may be returned.

- Column count / table structure errors – due to column header names being included, improper delimiter, extra tabs, extra or missing columns of data, spaces or other characters at the end of a row.
- Row and column value specific errors – may occur for one or more reasons including: data truncation, invalid date / time format, invalid decimal precision or field width exceedance, or if a value is not in a list of valid values or expected range.

If column count / table structure errors are encountered, the LEDD Checker will return an error and stop the checking process.

The EDDs will not be processed any further until the column errors are resolved. Text fields are validated for truncation. Date / Time fields are validated for truncation and format compliance. Numeric decimal fields are validated for truncation, character type compliance and decimal precision. All required fields are validated for null values or empty text strings (i.e. spaces). The LEDD Checker will return a list of all errors in and include a reference to the row number on which the error occurred. Note that consecutive EDD files may be loaded and checked, and submitted while logged in. However, no data may be submitted until all EDD files have passed through the LEDD Checker without errors. The list of errors may be printed by selecting the "Print this Page" button from the checker error page.

If the EDD files pass with no errors, the submittal page will immediately load. To complete the submittal stage, include the following information in the comment and additional information area of the form: laboratory name, laboratory contact person, project name, project number, site name/number, fractions included and any specific comments related to the EDD. Select the “Submit Files” button to continue the submittal process.

The submittal stage is not considered complete until a unique ticket key reference is returned in the browser window. The ticket key reference must be printed for record of submission and future reference. In addition, a copy of the ticket key reference must be included in the PDF data package.

LABORATORY STANDARD OPERATING PROCEDURES

METALS DIGESTION/PREPARATION

METHODS

USEPA SW846

3005A, 3010A, 3030C, 3031, 3050B

USEPA CLPILM 04.1 Aqueous & Soil/Sediment (NJDEP does not accept CLPILM 04.1 after June, 2003)

Addendum for USEPA CLPILM 05.2 Aqueous & Soil/Sediment

USEPA Methods for Chemical Analysis of Water and Wastes

200.7, Standard Methods 3030C

SOP NUMBER: **SOP-100**

REVISION NUMBER: **19**

APPROVED BY:

SECTION MANAGER

QUALITY ASSURANCE OFFICER

07/25/06
EFFECTIVE DATE

04/10/08
DATE OF LAST REVIEW

METALS DIGESTION/PREPARATION

References:
Methods 3005A/USEPA CLPILM0 4.1 Aqueous, 3010A, 3030C, 3031, 3050B
USEPA CLPILM0 4.1 (Soil/Sediment), 200.7, Standard Methods 3030C
See Addendum for USEPA CLPILM 05.2 (Aqueous & Soil/Sediment)

I. SCOPE AND APPLICATION

A. AQUEOUS

1. Method 3005A and USEPA CLP ILM0 4.1, "Acid Digestion of Waters for Total Recoverable or Dissolved Metals for Analysis by ICP Spectroscopy".

   a. This method is used to prepare surface water, ground water, drinking water and wastewater samples for analysis by inductively coupled argon plasma spectroscopy (ICP).

2. Method 200.7, "Determination of Metals and Trace Metals in Water and Wastes by Inductively Coupled Plasma-Atomic Emission Spectrometry"

   a. This method is used to prepare surface water, ground water, drinking water and wastewater samples for analysis by inductively coupled argon plasma spectroscopy (ICP).

3. Method 3010A, "Acid Digestion of Aqueous Samples and Extracts for Total Metals for Analysis by ICP Spectroscopy".

   a. This method is used to prepare aqueous samples, EP and mobility-procedure extracts, and wastes that contain suspended solids for analysis by ICP. The procedure is used to determine total metals.

4. Method 3030C (Standard methods), "Preliminary Treatment for Acid-Extractable Metals".

   a. This method is used to prepare ground water samples from North Carolina for analysis by ICP.

B. SOLIDS

1. Method 3050B, "Acid Digestion of Sediments, Sludges and Soils".

   a. This method is used to prepare sediments, sludges and soil samples for analysis by ICP. Since certain matrices may result in poor recovery, the method of standard additions may be used when analyzed.

   b. It should be noted that some metals could be biased high with the soil digestion when dilution is necessary. Take necessary measures to ensure that dilutions are made as accurately as possible.

2. USEPA CLP ILM0 4.1, "Acid Digestion of Soil/Sediment"

   a. This method is used to prepare sediments and soil samples for analysis by ICP. Since certain matrices may result in poor recovery, the method of standard additions may be used when analyzed.

C. OILS

1. Method 3031, "Digestion Procedure for Oils".

   a. This method is used to prepare samples containing oils, greases or waxes for analysis by inductively coupled argon plasma emission spectroscopy (ICP).

D. **NOTES:**

1. "Total Metals" includes all metals, inorganically and organically bound and both dissolved and particulate.

2. "Dissolved metals" includes all metals present in a sample after filtration through a 0.45 micron filter followed by digestion.

II. SUMMARY OF METHODS

A. A representative sample of water, soil or oil is put into an acid medium and exposed to heat for a certain amount of time. This allows for reduction of interferences by organic matter and converts metals bound to particulates to form the free metal that can be determined by ICP-Atomic Emission Spectrometry.

NOTE: When a reporting limit is required for a project lower then is customary, a four times concentration must be used in order to reach that lower level. Care

must be taken to matrix match this concentrated aliquot. A blank and laboratory control sample (at a reduced concentration) are required with this concentration. A matrix spike (not at reduced concentration) and duplicate or matrix spike and matrix spike duplicate is needed per 20 samples or per batch.

III. SAMPLE HANDLING AND PRESERVATION

A. AQUEOUS

1. Samples are taken in high density polyethylene, one liter bottles. Samples should be preserved with concentrated HNO_3 to a pH <2 immediately once sampled. If dissolved metals are to be analyzed the sample should be filtered before the HNO_3 is added. The samples should be maintained at 4°C until analysis. The holding time for metals samples is 180 days or approximately 6 months.

B. SOLIDS

1. Samples are taken in high density polyethylene(CLP only) or glass bottles. The samples should be maintained at 4°C until analysis. The holding time for metals samples is 180 days or approximately 6 months.

C. OILS

1. Samples are taken in high density polyethylene bottles. The samples should be maintained at 4°C until analysis. The holding time for metals samples is 180 days or approximately 6 months.

IV. INTERFERENCES

A. AQUEOUS

1. Method 3005A and USEPA CLPILM0 4.1, "Acid Digestion of Waters for Total Recoverable or Dissolved Metals for Analysis by ICP Spectroscopy", SW846, July, 1992.

    a. This digestion procedure may not be sufficiently vigorous to destroy some metal complexes.

2. Method 200.7

3. Method 3010A

    a. See method 6010B.

B. SOLIDS

1. Method 3050B

    a. Sludge samples can contain diverse matrix types, each of which may present its own analytical challenge. Spiked samples and any relevant standard reference material should be processed to aid in determining whether this method is applicable to a given waste.

2. USEPA CLP ILM0 4.1

    a. Sludge samples can contain diverse matrix types, each of which may present its own analytical challenge. Spiked samples and any relevant standard reference material should be processed to aid in determining whether this method is applicable to a given waste.

C. OILS

1. Method 3031

    a. These digestates can have very high dissolved solids, which may necessitate the use of internal standards, dilutions, or the method of standard addition.

V. SAFETY

A. Normal accepted laboratory safety practices should be followed while performing this analysis.

B. Be certain the exhaust hood is functioning before you begin the digestion procedure.

C. Hot acids can be extremely corrosive. Avoid inhalation or contact with skin.

VI. EQUIPMENT/APPARATUS

A. Fume hood, Labconco or equivalent.

B. Hot plate, Thermolyne cimarec-3 or equivalent source for use at 95°C. The temperature of the hot plate must be monitored via the use of a temperature blank.

C. Thermometer capable of reading 80 to 120 degrees C – ERTCO cat# 611-3-SC or equivalent.

D. Vacuum pump for filtering dissolved metals- Gast or equivalent.

E. Analytical balance capable of weighing to 0.01 gram. Mettler model BB300 or equivalent.

F. Beckman CS-6R centrifuge.

G. Various class A volumetric glassware and ribbed watchglasses, Pyrex or equivalent.

H. Whatman No. 41 filter paper or equivalent.

I. Whatman No. 42 filter paper or equivalent.

J. Whatman 0.45 micron filter paper or equivalent.

K. 250 mL beaker or other appropriate vessel such as polypropylene block digester tubes, watch glasses and caps.

L. Stirring device, e.g. magnetic stirrer, glass rod or equivalent.

M. Manual Sample Mill

N. Wiley Sample Mill

O. Clippers for cutting vegetation

NOTE: All glassware should be acid washed.

VII. REAGENTS AND STANDARD PREPARATION

A. REAGENTS

1. Metals grade Nitric acid (HNO_3). Reagent should be analyzed to determine level of impurities. If method blank is <MDL, then the reagent can be used.

2. Metals grade Hydrochloric acid (HCl). Reagent should be analyzed to determine level of impurities. If method blank is <MDL, then the reagent can be used.

3. 30% hydrogen peroxide reagent, ACS Grade. Reagent should be analyzed to determine level of impurities. If method blank is <MDL, then the reagent can be used.

4. Metals grade Sulfuric acid (H_2SO_4). Reagent should be analyzed to determine level of impurities. If method blank is <MDL, then the reagent can be used.

5. Reagent water (Deionized water).

6. Potassium Permanganate - Ultra pure grade. Reagent should be analyzed to determine level of impurities. If method blank is <MDL, then the reagent can be used.

7. Ammonium hydroxide, concentrated, reagent grade. Reagent should be analyzed to determine level of impurities. If method blank is <MDL, then the reagent can be used.

8. Ammonium phosphate, reagent grade- Reagent should be analyzed to determine level of impurities. If method blank is <MDL, then the reagent can be used.

9. Base oil, analyte-free. Oil should be analyzed to determine level of impurities. If method blank is < MDL, then the reagent can be used.

B. STANDARDS

1. Traceability

a. A bound logbook record shall be maintained on all reference materials. The record shall include date of receipt, source, purity, all compositional information, storage conditions and expiration date. These materials/solutions are to be identified by a unique number in the logbook as well as on the container's label.

b. All working standards made from reference materials shall be labeled with a unique ID number with complete information on preparation date, concentration of each compound, solvent, preparer's name, expiration date and the logbook where information is recorded. Reagents shall be labeled with date received and expiration date, if applicable. All of the information described above shall also be recorded in a bound logbook. Measurements made during standards preparation (e.g., from weighing operations, volume diluted to, etc.) shall also be recorded. There should be no container with sample, sample extract, standard solution, etc. that is not correctly labeled and properly stored.

c. The analyst must initial and date each entry made in a logbook. Each analyst must be sure to "Z" out the unused area of each logbook page.

2. PREPARATION

A. Laboratory control sample

1. Aqueous

a. This solution is prepared as follows: 50 mL concentrated HCl, 20 mL concentrated HNO_3, 1 mL of CLP-CAL-1, Solution A, 1 mL of CLP-CAL-1 Solution B, 0.25 mL of CLP-CAL-2, and 0.25 mL of CLP-CAL-3 diluted to 1 L in a volumetric flask. Use 50 mL (100 mL for strict CLPIlM0 4.1) for digestion. This solution is given a unique identifier and recorded in sample digestion logbook.

b. For four times concentrated samples: The solution is prepared as follows: 50 mL concentrated HCl, 20 mL concentrated HNO_3, 1mL CLPP-SPK-4 (Inorganic Ventures) (This solution contains 10 mg/L Selenium, 100 mg/L Antimony, 50 mg/L Cadmium and Thallium, 40 mg/L Arsenic and 20 mg/L Lead) to 1 L in a volumetric flask. This solution is given a unique identifier. Use 12.5 mLs to 50 mLs and prepare two aliquots. Heat at 90 to 95°C to reduce the volume in each vessel to ten mLs and then combine each 10 mL aliquot into one vessel and take to a final volume of 25 mLs. Take care to matrix match acids so that the final 25 mL portion will contain 2% HNO_3 and 5% HCl. Use 0.125 mLs HNO_3 and 0.3125 mLs HCl to each 50 mL vessel.

2. Solids

a. A 1.0 ±0.02 gram aliquot of teflon chips is weighed and spiked using the same spiking solution used for matrix spikes. This sample is given a unique identifier according to the Lot# for the teflon chips used and when digested is given the descriptor. i.e. LCSS(date)A and then B etc. plus the unique identifier number assigned. Alternatively a solid matrix standard reference material is obtained from the manufacturer. This sample is given a unique identifier and recorded in the sample digestion logbook.

3. Oils

a. **An analyte free oil MUST be used or explosive reactions can occur.** An analyte free oil (wesson oil which has been analyzed previously to prove that it is < MDL.) is spiked using the same spiking solution used for matrix spikes. This sample is given a unique identifier. i.e. LCSO(date)A and then B etc.

B. Spiking solution

1. Sample is spiked using 0.1 mL of CLP-CAL-1, Solution A, 0.1 mL of CLP-CAL-1 Solution B, 0.025 mL of CLP-CAL-2 and 0.025 mL of CLP-CAL-3 for a final volume of 100 mL. If only 50 mL is used, decrease amount used appropriately. These solutions are given unique identifiers. Record the amount spiked and the unique identifier of the standard.

2. CLP sample is spiked using 0.1 mL CLPP-SPK-1 and 0.1 mL CLPP-SPK-4 for a final volume of 100 mL. If only 50 mL is used, decrease amount used appropriately. These solutions are given unique identifiers.

3. For samples that require four times concentration, the sample is spiked using 0.0125 mLs of CLPP-SPK-4 to each of two vessels with 50 mLs of sample in each. The volume of each of the vessels is lowered to less then 10 mLs and combined and the final volume of this concentrated sample is 25mLs.

VIII. CALIBRATION

A. The temperature of the samples must be maintained at 95°C and monitored via a temperature blank. 85° for oil samples. Record in digestion logbook.

IX. PROCEDURE

A. Glassware preparation for oil digestion or when the hot-block can not be used:

1. Wash glassware with hot soapy water and rinse thoroughly. (Beakers must be washed as soon as possible after being used, dirty beakers must not be allowed to sit overnight.)

2. Rinse glassware with reagent water that contains 5% HNO_3 and 5% HCl followed by a rinse with reagent water.

3. Prior to use, all glassware must be confirmed clean via a glassware check. Otherwise, repeat step "2" until the glassware check passes.

B. Aqueous sample filtration (for dissolved metals):

1. Thoroughly clean a flask and funnel with hot soapy water. Next, rinse the flask and funnel with 1:5 HNO_3 followed by a thorough D.I. water rinsing. This step is very important because the filters contain some metals (namely Zn) which could contaminate the samples.

2. Rinse a 0.45 micron filter with 1:5 HNO_3 thoroughly, followed by D.I. water.

3. Filter the unpreserved sample. If dissolved Hg analysis is requested for the sample, filter at least 200 mL.

4. Discard the first 50 to 100 mL.

5. A preparation blank must be taken through the filtration step and analyzed with the sample.

6. Preserve the sample with HNO_3 to pH<2.

7. Soluble samples that are clean and clear do not have to be digested. Use 100 mL sample, add 5 mL of concentrated HCl and 2 mL of concentrated HNO_3. **Samples must be digested unless approval for analysis without digestion is received from the project manager.**

C. Aqueous sample preparation

1. Method 3005A and USEPA CLP ILM0 4.1, "**Acid digestion procedure for total recoverable or dissolved metals for analysis by ICP ".**

a. Shake sample thoroughly and pour 50 mL of the well-mixed sample into a digestion vessel. For samples which require concentration pour 50 mLs of the well-mixed sample into two digestion vessels.

b. Add 0.50 mL (1 mL of (1+1) when strict CLP ILM0 4.1 is required) concentrated HNO_3 to the sample. For samples which require concentration, add 0.125 mL (0.25 mL of (1+1) when strict CLP ILM0 4.1 is required) concentrated HNO_3 to the sample.

c. Add 2.5 mL (5 mL of 1+1) when strict CLP ILM0 4.1 is required) concentrated HCl to the sample. For samples which require concentration, add 0.3125 mL (0.625 mL of (1+1) when strict CLP ILM0 4.1 is required) concentrated HCl to the sample.

d. Cover the sample with a ribbed watch glass or equivalent source.

e. Transfer the digestion vessel to a pre-heated hot plate or hot block at 90 to 95°C. A temperature blank will assure correct temperature. The temperature must be recorded in the digestion log book. Take the volume down to between 5 to 10 mL, (12 to 25 mLs when strict CLP ILM0 4.1 is required) **making certain that the sample does not boil**. **This is extremely important. Boiling may lead to vaporization of certain analytes.** Remove the sample from the hot plate and cool

f. When necessary, filter or centrifuge the sample to remove insoluble material that could clog the nebulizer. The filtering apparatus must be thoroughly cleaned with dilute nitric acid prior to filtration.

g. Bring sample to its predigestion volume (or when samples require concentration, to a volume four times lower then what was started with) with DI water in the digestion vessel. The final volume must be recorded in the digestion log book.

h. The sample is now ready for analysis.

i. The digestion log must contain the date, analyst, sample number, client, sample mass/volume, final volume of digestate, lot # of acids used and the preparation and ID of standards plus identification #'s for standards used for spiking and the volume spiked into the sample.

2 Method 200.7, "**Acid digestion procedure for total recoverable metals**".

a. Shake sample thoroughly and pour 50 mL of the well-mixed sample into the digestion vessel. If sample contains undissolved solids >1% refer to Section 11.3 of Method 200.7 for subsequent procedures.

b. Add 1.0 mL concentrated HNO_3 to the sample.

c. Add 2.50 mL concentrated HCl to the sample.

d. Cover the sample with a ribbed watch glass or equivalent source.

e. Transfer the digestion vessel to a pre-heated hot plate or equivalent source at 85°C. Take the volume down to between 10 to 15 mL, **making certain that the sample does not boil**. **This is extremely important. Boiling may lead to vaporization of certain analytes.**

f. Leave sample on hot plate and gently reflux for 30 minutes. Remove from hot plate and cool.

g. Bring sample to its predigestion volume with DI water in the digestion vessel.

h. When necessary, filter or centrifuge the sample to remove insoluble material that could clog the nebulizer. The filtering apparatus must be thoroughly cleaned with dilute nitric acid prior to filtration.

i. The sample is now ready for analysis.

j. The digestion log must contain the date, analyst, sample number, client, sample mass/volume, final volume of digestate, lot # of acids used and the preparation and ID of standards.

3. Method 3010A, "**Acid Digestion of Aqueous Samples and Extracts for Total Metals for Analysis by ICP Spectroscopy**".

a. Shake sample thoroughly and pour 50 mL of the well-mixed sample into the digestion vessel.

b. Add 1.5 mL concentrated HNO_3 to the sample.

c. Cover the sample with a ribbed watch glass.

d. Transfer the digestion vessel to a pre-heated hot plate or hot block at 90 to 95°C. A temperature blank must be used, with the temperature being recorded in the log book. Take the volume down to a low

volume (~5 mL), **making certain that the sample does not boil**. **This is extremely important. Boiling may lead to vaporization of certain analytes. Also make certain that no portion of the bottom of the digestion vessel is allowed to go dry. This may lead to low recoveries.** Remove the sample from the hot plate and cool.

e. Add another 1.5 mL portion of concentrated HNO_3 to the sample.

f. Cover the sample with a ribbed watch glass.

g. Transfer the vessel to the hotblock or equivalent source. Increase the temperature so a gentle reflux occurs. Continue heating, adding additional acid as necessary, until the digestion is complete (generally indicated when the digestate is light in color or does not change in appearance with continued refluxing).

h. Uncover the vessel and evaporate to a low volume (~3 mL) **making certain that no portion of the bottom of the digestion vessel is allowed to go dry.** Remove and cool.

i. Add 2.5 ml of 1:1 HCl (10 mL/100 mL of final solution).

j. Cover the digestion vessel and reflux for an additional 15 minutes.

k. Bring sample to its predigestion volume in digestion vessel.

l. When necessary, filter or centrifuge the sample to remove insoluble material that could clog the nebulizer. The filtering apparatus must be thoroughly cleaned with dilute nitric acid prior to filtration.

Note: When preparing USACE project samples, if any sample in a digestion batch requires filtration, all samples (including QC samples) must be treated in the same manner.

m. The sample is now ready for analysis.

n. The digestion log must contain the date, analyst, sample number, client, sample mass/volume, final volume of digestate, lot # of acids used and the preparation and ID of standards.

4 Method 3030C (Standard Methods), "**Preliminary treatment for Acid-Extractable Metals"**

a. Shake sample thoroughly and pour 50 mL of the well-mixed sample into a 50 mL digestion vessel.

b. Add 2.5 mL 1:1 HCl to the sample.

c. Heat 15 minutes in a hot bath.

d. Filter through a membrane filter.

e. Adjust filtrate volume to 50 mL with DI water.

f. Transfer to ICP analyst.

D. Solid sample preparation

It is extremely important that waste (when appropriate), soil and sediment samples be mixed thoroughly to ensure that the sample is as representative as possible of the sample media. The most common method of mixing is referred to as quartering. The quartering procedure should be performed as follows:

- *The material in the sample pan(inorganic-plastic/organic-aluminum) should be divided into quarters and each quarter should be mixed individually.*
- *Two quarters should then be mixed to form halves.*
- *The two halves should be mixed to form a homogenous matrix.*

This procedure should be repeated several times until the sample is adequately mixed.

NOTE: Samples that are clay type materials should be handled in a different manner. Due to these type sample matrices having an affinity to stick to most anything that touches it, another approach must be followed. Obtain a representative sub-sample aliquot from the center or middle section of the sample container.

Grinding of Vegetation Samples

Remove sample from shipping container and brush off dirt particles. Chop sample into about half inch pieces with clippers or other cutting tool. Place the sample in an aluminum pan and air-dry in an exhaust hood to the appropriate dryness for grinding. It should be dry enough where it won't stick to the inside of the mill. Grind the dried sample to fineness in either the manual sample mill

or the Wiley mill or both if needed. Place the ground sample in a container and label immediately.

1. USEPA CLP ILM0 4.1, **"Acid digestion of Soil/Sediment"**

   a. Mix the sample thoroughly to achieve homogenity. For each digestion procedure, weigh (to the nearest 0.01 g) a 1.0 to 1.5 g portion of sample and transfer to a digestion vessel.

   b. Add 10 mL of 1:1 nitric acid (HNO_3), mix the slurry, and cover with a watch glass or equivalent source. Heat the sample to 92 to 95°C and reflux for 10 minutes without boiling. Allow the sample to cool, add 5.0 mL of concentrated HNO_3, replace with watch glass or equivalent source, as appropriate, and reflux for 30 minutes. Do not allow the volume to be reduced to less than 5 mL while maintaining a covering of solution over the bottom of the heating vessel.

   c. After the second reflux step has been completed and the sample has cooled, add 2 mL of Type II water and 3.0 mL of 30% hydrogen peroxide (H_2O_2). Return the heating vessel to the hot plate or equivalent heating source for warming to start the peroxide reaction. Care must be taken to ensure that losses do not occur due to excessively vigorous effervescence. Heat until effervescence subsides, and cool the heating vessel.

   d. Continue to add 30% H_2O_2 in 1 mL aliquots with warming until the effervescence is minimal or until the general sample appearance is unchanged. (NOTE: Do not add more than a total of 10 mL 30% H_2O_2.)

   e. If the sample is being prepared for ICP analysis of Al, As, Sb, Ba, Be, Ca, Cd, Cr, Co, Cu, Fe, Pb, Mg, Mn, Ni, K, Se, Ag, Na, Tl, V, and Zn, add 5 mL of 1:1 HCl and 10 mL of Type II water, return the covered heating vessel to the hot plate or equivelent heating source, and heat for an additional 10 minutes. After cooling, filter through Whatman No. 42 filter paper (or equivalent) and dilute to 50 mL with Type II water. NOTE: In place of filtering, the sample (after dilution and mixing) may be centrifuged or allowed to settle by gravity overnight to remove insoluble material. Dilute the digestate to 144 mL with DI water, add 5 mLs concentrated HCl and 1 mL of concentrated HNO_3, mix well and place into the appropriate container. The diluted sample has an approximate acid concentration of 2.5% (v/v) HCl and 5% (v/v) HNO_3. The sample is now ready for analysis.

f. The digestion log must contain the date, analyst, sample number, client, sample mass/volume, final volume of digestate, lot # of acids used and the preparation and ID of standards and ID of matrix spikes and the amounts used for spiking.

2. Method 3050B, **"Acid digestion of Sediments, Sludges and Soils"**

a. Mix the sample thoroughly for 5 minutes using a plastic spatula or Teflon coated spatula in a glass or plastic weigh boat to achieve homogeneity.

b. Weigh approximately (to the nearest 0.01 g) a 1 to 1.5 g portion of the sample directly into a digestion vessel. For samples with low percent solids a larger sample size may be used as long as digestion is completed. Record the exact mass in the digestion log.

NOTE: To achieve the lowest reporting limit possible, use a 2.0 g portion of sample with an ending volume of 100 mLs.

c. Add 5 mL D.I. water and 5 mL concentrated HNO_3(1:1), mix the slurry and cover with a watch glass. Place the sample in a preheated hot block and reflux at 95°C for 10 to 15 minutes being certain that the sample does not boil. Record temperature in digestion log book

d. Allow the sample to cool. Add 5 mL concentrated HNO_3, replace the watch glass and heat/reflux again for 30 minutes. If brown fumes are generated, indicating oxidation of the sample by HNO_3, repeat this step (addition of 5 mL of concentrated HNO_3) over and over until no brown fumes are given off by the sample indicating the complete reaction with HNO_3. Using a watch glass or equivalent allow the solution to evaporate to approximately 5 mL without boiling at 95°C $\pm$ 5°C for approximately two hours. Maintain a covering of solution over the bottom of the vessel at all times. Do not allow the volume to be reduced to less than 5 mL while maintaining a covering of solution over the bottom of the beaker. If the volume does get low, add 2.5 mL of D.I. water to bring volume back up.

e. Take the sample off the hot block and allow it to cool. Next, add 2 mL of D.I. water and 3 mL of 30% Hydrogen Peroxide. (The sample will bubble upon the addition of H_2O_2 if it is still warm.) Cover the vessel with a watch glass and return the sample to the hot block or equivalent source and heat until the bubbling subsides. Care must be taken to

ensure that losses do not occur due to excessively vigorous effervescence. Heat until effervescence subsides and cool the beaker. Add two more 3 mL portions of H_2O_2 to the sample in the same manner as before. (NOTE: Do not add more than a total of 10 mL 30% H_2O_2.)

f. Cover the sample with a ribbed watch glass and continue heating the acid-peroxide digestate at 95°C $\pm$ 5°C without boiling for approximately two hours until the volume has been reduced to approximately 2.5 mL. Maintain covering of solution over the bottom of the vessel at all times.

g. Add 2.5 mL of DI water and 2.5 mL of concentrated HCl and 10 mL of DI water, cover the sample with a ribbed watch glass and continue refluxing for an additional 10 minutes without boiling

h. When necessary, filter or centrifuge the sample to remove insoluble material that could clog the nebulizer. The filtering apparatus must be thoroughly cleaned with dilute nitric acid prior to filtration.

i. Bring sample up to 50 mL with D.I. water in the vessel. Add 150 ml of DI water to a 250 ml sample bottle. Invert the 50 ml sample digestion vessel several times to mix the sample and pour sample into the 150 ml of the sample bottle. Pour some sample back into the 50 ml sample digestion vessel to rinse and pour back into the 250 ml sample bottle and cap and mix.

NOTE1: When preparing USACE project samples, if any sample in a digestion batch requires filtration , all samples (including QC samples) must be treated in the same manner.

NOTE2: To achieve the lowest reporting limit possible use 2.0 grams of sample with an ending volume of 100 mLs.

j. The sample is now ready for analysis.

k. The digestion log must contain the date, analyst, sample number, client, sample mass/volume, final volume of digestate, lot # of acids used and the preparation and ID of standards.

E. Oils

1. Method 3031, "**Digestion Procedure for Oils**"

NOTE: THIS METHOD IS VERY TIME CONSUMING--DISCUSS SUB-CONTRACTING SAMPLES WITH YOUR SUPERVISOR AS SOON AS THEY COME IN THE DOOR.

a. Homogenize sample and Weigh approximately (to the nearest 0.01 g) a 0.5 g representative portion of the sample into a 250 mL beaker. Separate and weigh proportional aliquots of the phases if more than one phase is present. Record the exact mass in the digestion log. Larger or smaller sample sizes can be used if needed.

g. Add 0.5 g of potassium permanganate powder. If larger sample sizes are used, increase the amount of potassium permanganate so that the ratio of oil to postassium permanganate is still 1:1. Mix the oil and permanganate thoroughly until homogenous. Thick oils and tars that cannot be mixed should be heated to achieve mixing (the oil may react mildly). It is important to record the amount of potassium permanganate used for each sample if analysis is by ICP-AES and correction is to be made for the amount of manganese. If more than 10% of the sample is aromatic material, such as xylene, then the reaction will be incomplete. If this is the case, increase the amount of potassium permanganate. If the sample is a mixture of oil and other non-organic materials, reduce the amount of potassium permanganate.

NOTE: All steps requiring the use of acids should be conducted under a fume hood by properly trained personnel using appropriate laboratory safety equipment. This should include face shields and latex gloves.

h. Cautiously add 1.0 mL concentrated H_2SO_4, and stir with an appropriate stirring device. If larger sample sizes are used, increase the volume of the sulfuric acid so that the ratio of oil to sulfuric acid is 1 g to 2 mL. The H_2SO_4 can be added dropwise or all at once, depending on analytical needs. (Generally, dropwise is preferred when low reporting limits are needed.)

NOTE: To prevent a strong exothermic reaction, H_2SO_4 should be added dropwise to all samples unfamiliar to the analyst and to all samples that are known to be highly reactive.

The reaction can take several seconds to begin, but when it occurs it will be very quick, vigorous, and exothermic. Generally larger sample sizes will react faster than smaller. Likewise, lower average molecular weight materials will react faster than heavier. Do not be mislead by an initial lack of reactivity. A grey-white vapor will be ejected from the beaker (SO_3) and splattering and bubbling can occur. The beaker will become very hot. This step is complete when no more gases are given off and the sample would be a thick black lumpy paste. Allow the beaker to cool as needed.

NOTE: Care must be taken when working with very light organic materials, such as diesel fuels, as they may flash. Generally, the lower the average molecular weight of the meterial correlates to a greater danger of flashing. The danger of flashing is reduced by adding the sulfuric acid dropwise.

NOTE: If more than 10% of the sample is aromatic material, such as xylene, only a little grey-white vapor will form. This will reduce accuracy and complicate nebulization. If there is a signigicant amount of non-hydrocarbon material, a sputtering recation will occur and black MnO_2 particulates will be given off. See section (b.) above under procedure.

i. Add 2 mL of concentrated HNO_3 and stir. This reaction will be slightly exothermic. If larger sample sizes are used, it is not always necessary to increase the volume of HNO_3 proportionately, depending on analytical needs. Some reddish-brown vapor (NO_2) may be given off. Allow the reaction to continue until complete, that is when the digestate no longer gives off fumes. Allow the beaker to cool as needed.

j. Add 10 mL of concentrated HCl and stir. If larger sample sizes are used, it is not always necessary to increase the volume of HCl proportionately, depending on analytical needs. This reaction will be slightly exothermic and gas formation and foaming will occur. Lighter oils will foam more than will heavier oils. If excess foaming occurs, add water to prevent sample loss. Allow the beaker to cool as needed.

k. Heat the beaker until there is no further gas evolution. (temperature should not exceed 150 °C to prevent volatilization). There may be additional foaming or other milder reactions which may result in overflow from the beaker. If excess foaming occurs, either remove the beaker from the heating source until foaming subsides or add sufficient

water to prevent overflow. The final digestate should be a clear yellow liquid with black or dark reddish-brown particulates.

l. Filter the digestate through Whatman 41 filter paper and collect filtrate in a volumetric flask or beaker.

m. Wash the digestion beaker and filter paper, while still in the funnel, with no more than 5 mL of hot HCl.

NOTE: The purpose of this next step is to recover antimony, barium, and silver that may not have been completely solubilized. If the sample is not being prepared for these analytes, the next step may be skipped.

n. (Optional) After having washed the filter paper, remove the filter and residue from the funnel and place it back in the beaker. Add 5 mL of conc. HCl and place the beaker back on the heating source until the filter paper dissolves (temperature should not exceed 150 °C ±5 °C to prevent volatilization). Remove the beaker from the heating source and wash the cover and sides with reagent grade water and then filter the residue and collect the filtrate in the same flask or beaker as in sections f. and g. above. Allow the filtrate to cool and quantitatively transfer to a volumetric flask. Bring to volume.

o. (Optional) If the filtrate is collected in a beaker, the filtrate can be heated again to drive off excess HC1. This can reduce matrix effects in sample introduction (temperature should not exceed 150 °C ± 5 °C to prevent volatilization). When sufficient HCl has been removed, remove the beaker from the heating source, allow to cool, and then transfer the contents to a volumetric flask and bring to volume. However, if too much HCl is removed, barium, silver and antimony can be lost.

p. Analyze the flitrate by ICP-AES. Depending on the final volume selected, the total solids in the digestate may be high enough to cause nebulization problems. Problems due to high dissolved solids may be corrected by 1) following optional Section i., 2) using internal standards, 3) using flow injection analysis, or 4) using other matrix correction procedures.

Manganese Removal Steps

NOTE: The purpose of these next steps is to remove the manganese in the digest by precipitating it as manganese ammonium phosphate

under alkaline conditions. Elements that do not form insoluble phosphates, such as arsenic, are filtered out and can be analyzed at lower concentrations.

q. Take the digestate, or portion of digestate and reduce the volume to remove as much HCl as possible without going below 10 mL. Then add conc. NH_4OH until pH is 7 or greater. For most matrices, the digestate will change colors (often from yellow to brown) at pH 7. A mild exothermic reaction will occur immediately.

r. Add at least 2 g ammonium phosphate for each 1 g of potassium permanganate used in the digestion and stir. An excess of phosphate is needed for good analyte recovery. Then add enough water and mix to ensure maxium precipitation. A pink or yellow silky amorphous precipitate, manganese ammounium phosphate, will form. If too much NH_4OH is used some of the manganese ammonium phosphate can be solubilized. Stir until precipitation is complete. Some ammonium phosphate may remain unreacted at the bottom of the beaker.

s. Filter the digestate through Whatman 41 filter paper (or equivalent) and collect filtrate in a volumetric flask or beaker.

t. Heat the filtrate to volatilize the ammonia (temperature should not exceed 150 °C ± 5 °C to prevent volatilization). The volume of filtrate can be reduced by heating to no less thatn 10 mL. If too much water is removed ay ammonium chloride formed will solidify. If this occurs, either add enough water to dissolve the solids or filter out the solids and wash the residue with deionized water. The filtrate can be analyzed by ICP-AES.

u. The digestion log must contain the date, analyst, sample number, client, sample mass/volume, final volume of digestate, lot # of acids used and the preparation and ID of standards.

X. CALCULATIONS

A. The analyst must be supplied with both beginning sample masses/volumes and final digestate volumes. This information must be recorded in the digestion log.

XI. QUALITY CONTROL

A. Digestion

1. Temperature blank

   a. The temperature of the hot plate/hot block must be monitored for temperature during the digestion process.

   b. The thermometer must be tagged with annual calibration information. Record the thermometer reading, correction factor and the corrected temperature in the digestion log.

2. Blanks

   a. Digest a blank with every batch of samples digested (20 sample maximum). The blank is prepared by adding all the same reagents added to the samples to a clean dry beaker and taking it through the same process as the samples. **NOTE: The blank for OILs MUST include an analyte-free oil or explosive reactions can occur.**

   b. Also, there must be a blank for every different method of digestion that is set up that day, every 20 samples.

   c. There must also be a blank for every different matrix of samples that is to be digested, every 20 samples.

   d. Sample is given a unique identifier in the digestion log.

3. Laboratory Control Samples

   a. For water samples, one LCS is digested with every batch of samples digested (20 sample maximum).

   b. For water samples, a LCS is digested every day for each type of digestion, every 20 samples.

   c. For soil/sediment samples, a soil matrix standard reference material (SRM) must be digested per batch (20 samples maximum) or alternatively a spiked teflon chip sample.

   d. Sample is given a unique identifier in the digestion log.

   e. Recoveries of standard reference materials or laboratory control samples spiked with organo-metallic standards recoveries should be **±25% of their true values for OILS.**

4. Duplicates

   a. A duplicate is prepared every 20 samples. This usually takes the form of a matrix spike duplicate.

      NOTE: Certain projects require a sample duplicate and a matrix spike duplicate with each set of twenty samples.

5. Blank Spike

   a. This is required for certain projects.

B. Sample Matrix

   NOTE: Field blanks/duplicates, trip blanks, or equipment blanks are not to be used for sample matrix QC samples.

   1. Matrix spike

      a. Digest a spike and spike duplicate every 20 samples where sample volume is adequate to do so. Choose a sample (if possible) that has a lot of metals requested to be analyzed.

         NOTE: For some projects, a sample duplicate and sample spike may be required instead of a spike and spike duplicate. Your supervisor should make you aware of these projects.

      b. The following metals do not get digested spikes when using CLP spike.

         Calcium
         Magnesium
         Sodium
         Potassium

      v. For TCLP samples, a spike must be digested for every matrix. You should inspect the sample (original sample prior to extraction) or check the log book to determine matrix type. (Also the matrix spike aliquot must be added to the extract after filtration but before preservation.)

      d. The CLH project requires that a high and a low spike be prepared and analyzed. Spikes shoud be prepared at 40 mg/Kg and 400 mg/Kg for soil samples and 200 ug/L and 2000 ug/L for aqueous samples.

XII. CORRECTIVE ACTIONS

A. Sample boils during digestion.

1. Redigest another sample aliquot.

B. Sample goes dry or portion of beaker bottom is exposed due to excess evaporation during digestion.

1. Redigest another sample aliquot.
2. Glass beaker dry for an extended period of time? Discard beaker.

XIII. SPECIAL NOTES

A. **Never** take for granted how a sample should be digested. If the sample looks strange or unusual, or if you are not sure what metals the sample gets, what detection limits are required, whether the sample is total or dissolved, or even what method of digestion should be used, always ask your supervisor or the person who is to analyze the sample. How metals need to be digested changes too often to take it for granted.

B. **Antimony (Sb) soils** should be analyzed within 48 hours of digestion whenever possible. When a soil requesting Antimony analysis is received, you must coordinate with the person who will be analyzing it to be sure that they can analyze it on the same day that it is digested.

C. Labels for the digested sample must be written in a neat and legible manner. The labels must include such information as sample number, client name, the date digested, and the volume or mass digested.

D. There are several precautions that must be taken to minimize the possibility of contamination.

1. All metals glassware must be kept separate from all other laboratory glassware.

2. Metals glassware must be washed as soon as possible after being used. **Dirty metals beakers must not be left overnight.**

3. Acid to be used for metals digestions must be kept separate from all other laboratory acid.

E. Samples must be digested in a timely manner to ensure ICP analysis remains on schedule for data generation. Samples received on or before Wednesday of week X must be prepared for ICP digestion by the end of week X. Your supervisor must be consulted if this schedule can not be met at a particular time.

F. Please consult Waste Disposal SOP-405, for information concerning disposal of waste generated from this area. Quantity of chemicals purchased should be based on expected usage during its shelf-life and the disposal cost of unused material. Actual reagent preparation volumes should reflect anticipated usage and reagent stability.

Addendum for USEPA CLPILM 05.2 AQUEOUS &SOIL/SEDIMENT

The following is a list of changes for sample preparation when the 5.2 statement of work is required:

1. Soluble samples are required to be digested unless the chain of custody specifically states that digestion is not required. An MDL study must be done on the unprepared MDL solution in order to provide MDL levels for samples that are not digested. When digestion is not required an LCSW and post digestion spike are not required.

2. Digestates must be stored until 365 days after delivery of a complete, reconciled data package.

3. Preparation codes are used on form 13's. They are found in the 5.2 statement of work page B-39 3.4.12.2.4.

DEFINITIONS – Refer to SOP-431 for common environmental laboratory definitions.

MERCURY ANALYSIS IN WATER

BY MANUAL COLD VAPOR TECHNIQUE

METHODS USEPA SW846 7470A and 245.1

CLP-M 4.1 (NJDEP does not accept CLPILM 04.1 after June, 2003), Addendum for USEPA CLP ILM 05.2

SOP NUMBER:	**SOP-103**
REVISION NUMBER:	**16**
APPROVED BY:	
	SECTION MANAGER
	TECHNICAL DIRECTOR
EFFECTIVE DATE:	**01/28/09**
DATE OF LAST REVIEW	**01/28/09**

MERCURY ANALYSIS IN WATER BY MANUAL COLD VAPOR

References:
SW846 Method 7470A
USEPA Method 245.1
USEPA SOW ILM04.1
See Addendum for SOW ILM05.2

I. SCOPE AND APPLICATION

A. This method is a cold-vapor atomic absorption procedure for determining the concentration of mercury in mobility-procedure extracts, aqueous wastes, and ground waters. This method can also be used for sludge-type wastes. All samples must be subjected to an appropriate dissolution procedure prior to analysis.

B. In addition to inorganic forms of mercury, organic materials may also be present. These organo-mercury compounds will not respond to the cold vapor atomic absorption technique unless they are first broken down and converted to mercuric ions. Potassium permanganate oxidizes many of these compounds, but recent studies have shown that a number of organic mercurials, including phenol mercuric acetate and methyl mercuric chloride, are only partially oxidized by this reagent. Potassium persulfate has been found to give approximately 100% recovery when used as the oxidant step following the addition of the permanganate has been included to insure that organo-mercury compounds, if present, will be oxidized to the mercuric ion before measurement. A heat step is required for methyl mercuric chloride when present in or spiked to a natural system. For distilled water the heat step is not necessary.

C. The range of the method may be varied through instrument and/or recorder expansion. Using a 30 mL sample, a detection limit of 0.2 µg Hg/L can be achieved.

II. SUMMARY OF METHOD

A. The flameless AA procedure is a physical method based on the absorption of radiation at 253.7 nm by mercury vapor. Organic mercury compounds are oxidized and the mercury is reduced to the elemental state and aerated from solution in a closed system. The mercury vapor passes through a cell positioned in the light path of a flow injection Mercury system. Absorbance (peak height) is measured as a function of mercury concentration and recorded in the usual manner.

III. SAMPLE HANDLING AND PRESERVATION

A. Samples are preserved by acidification with nitric acid to a pH of 2 or lower immediately at the time of collection, and refrigeration to 4°C.

B. The holding time for the mercury digestion is 28 days from time of sampling.

IV. INTERFERENCES

A. Possible interference from sulfide is eliminated by the addition of potassium permanganate. Concentrations as high as 20 mg/L of sulfide as sodium sulfide do not interfere with the recovery of added inorganic mercury from distilled water.

B. Copper has also been reported to interfere; however, copper concentrations as high as 10 mg/L had no effect on recovery of mercury from spiked samples.

C. Sea waters, brines and industrial effluents high in chlorides require additional permanganate (as much as 6.25 mL in 30 mL of sample). During the oxidation step, chlorides are converted to free chlorine which will also absorb radiation at 253 nm. Care must be taken to assure that free chlorine is absent before the mercury is reduced and swept into the cell. This is accomplished by using an excess of hydroxylamine sulfate reagent (6.25 mL to 30 mL of sample).

D. Samples containing high concentrations of oxidizable organic materials, as evidenced by high chemical oxygen demand values, may not be completely oxidized of organic mercury will be low. The problem can be eliminated by reducing the sample volume or by increasing the amount of potassium persulfate (and consequently stannous chloride) used in the digestion.

V. Safety

A. Normal accepted laboratory practices should be followed while performing this procedure.

B. The toxicity and carcinogenicity of each reagent in this method have not been fully established. Each chemical should be regarded as a potential health hazard and exposure to these compounds should be minimized by good laboratory practices. Normal accepted laboratory practices should be followed during reagent preparation and instrument operation. Always wear safety glasses or full-face shield for eye protection when working with these reagents. Each laboratory is responsible for maintaining a current safety plan, a current awareness file of OSHA regulations regarding the safe handling of the chemicals specified in this method.

C. Mercury compounds are highly toxic if swallowed, inhaled, or absorbed through the skin. The analyst should use chemical resistant gloves when handling concentrated mercury standards.

D. The analyst should make sure that the system is vented to fresh permanganate in a bottle located at the back. Otherwise Hg vapors could be vented to the room.

VI. EQUIPMENT/APPARATUS

A. Perken Elmer Flow injection Mercury system

B. Mod Block Digester set to maintain 95±2°C for 2 hours.

C. Polypropylene sample digestion vessels with snap or screw caps or equivalent. **Five vessels of each lot of digestion vessels must be taken through analysis to check for mercury.**

VII. REAGENTS AND STANDARD PREPARATION

A. REAGENTS

1. Concentrated sulfuric acid suitable for Hg determination.

2. Concentrated nitric acid suitable for Hg determination.

3. Stannous chloride: in a 1000 mL volumetric flask add approximately 500 mL D.I. water, 30 mL concentrated HCl, add 11 grams stannous chloride crystals swirl to mix and dilute to 1000 mLs. Prepare fresh daily.

4. 3% HCl Carrier Solution: Dilute 30 mL of concentrated metals grade HCl to one liter. Prepare fresh daily.

5. Sodium chloride-hydroxylamine chloride solution: dissolve 120 grams of sodium chloride and 120 grams of hydroxylamine hydrochloride (very high grade --Do not get from Tennessee Reagents) in D.I. water and dilute to 1 liter. Note: this is normally made up 2 Liters at a time.

5. Potassium permanganate: 5% solution, w/v: dissolve 200 grams of potassium permanganate in 4000 mL of D.I. water. Should have "suitable for mercury determination" written on the side of the potassium permanganate bottle. This reagent takes overnight stirring (minimum of 3 hours if absolutely necessary). Use stirring bar already in the reagent bottle for this purpose. It is very easy to contaminate with mercury.

6. Potassium persulfate: 5% solution, w/v: dissolve 100 grams of potassium persulfate in 2000 mL D.I. water. Slight heating with stirring may be necessary to completely dissolve. The formation of crystals in this solution is not a problem.

B. STANDARDS

1. Traceability

a. A bound logbook record shall be maintained on all reference materials. The record shall include date of receipt, source, purity, all compositional information, storage conditions and expiration date. These materials/solutions are to be identified by a unique number in the logbook as well as on the container's label.

b. All working standards made from reference materials shall be labeled with a unique ID number with complete information on preparation date, concentration of each compound, solvent, preparer's name, and expiration date. Reagents shall be labeled with date received and expiration date, if applicable. All of the information described above shall also be recorded in a bound logbook. Measurements made during standards preparation (e.g., from weighing operations, volume diluted to, etc.) shall also be recorded. There should be no container with sample, sample extract, standard solution, etc. that is not correctly labeled and properly stored.

c. The analyst must initial and date each entry made in a logbook. Each analyst must be sure to "Z" out the unused area of each logbook page.

NOTE: All standard solutions should be prepared using class A volumetric flasks, class A volumetric pipettes (or calibrated Eppendorfs). All standards, blanks, and samples are taken through the digestion process.

a. Stock mercury solution: (100 µg/mL). Order from manufacturer already prepared. This solution is given a unique identifier.

b. Primary source and secondary source mercury standard solutions at 200 ug/L: dilute 2 mL of stock solution to 1000 mL in a 1000 mL volumetric flask, with 1.5 mL concentrated HNO_3.

c. Calibration standards

i. Prepared from the primary source working standard. The preparation of the calibration standards, etc. is described below.

a. Dilute the volumes below to 30 mLs in a 70 mL polypropylene vessel. (Note: The standards are diluted to 10 mLs for the initial step of the digestion. From that point when 25 mLs of DI water are added to samples, 15 mLs of DI water is added to the standards.

ug/L Hg	mLs of 200 ug/L standard in 30 mLs
0.20	0.03
0.50	0.075
1.0	0.15
2.0	0.30
4.0	0.60
6.0	0.90
10.0	1.5

iii. Appropriate reagents are added as below in the sample preparation section.

iv. Prepare one vessel for each.

v. It is necessary to digest the calibration standards.

e. Calibration verification standards

i. Initial calibration verification (ICV) solution – 4.0 ug/L

a. Prepared by diluting 0.6 mL of the second source standard to 30 mL with reagent water in a 70 mL polypropylene vessel. (TV = 4.0 ug/L)

b. Appropriate reagents are added as below in the sample preparation section.

c. It is necessary to digest the ICV standards for Method 7470A, Method 245.1 does not require digestion of standards.

ii. Continuing calibration verification (CCV) solution

a. Prepared from the primary source standard.

b. Prepared by diluting 0.3 mL of the primary standard at 200 ug/L to 30 mLs with reagent water in a 70 mL polypropylene vessel for 2.0 ug/L or 0.6 ml to 30 mls for 4.0 ug/L.

c. Appropriate reagents are added as below in the sample preparation section.

d. It is necessary to digest the CCV standards for Method 7470A, Method 245.1 does not require digestion of standards.

f. Digestion standards

i. Laboratory control sample

a. Prepared from the secondary source standard.

b. Prepared by diluting 0.3 mL of the second source standard to 30 mL with reagent water in a 70 mL polypropylene vessel.

c. Appropriate reagents are added as below in the sample preparation section.

d. This solution should be given a unique identifier in the digestion log.

ii.. Matrix Spikes

a. Prepared from the secondary source working standard.

b. Prepared by diluting 0.3 mL of the second source standard to 30 mL with sample in a 70 mL polypropylene vessel. Project specific or method specific requirements may over-ride the spiking level.

c. Appropriate reagents are added as below in the sample preparation section.

VIII. CALIBRATION

A. Set up the instrument with proper operating parameters.

1. Perkin Elmer Flow Injection Mercury System (FIMS).

i. Replace any old tubing that is around the pump cylinder. The sample transfer tubing connected to the seperator cover must not have any moisture in it. If it does replace it. **(Perkin-Elmer tygon**

tubing, waste and carrier 1.52mm I.D., waste only 3.17mm I.D., stannous chloride 1.14mm I.D.)

ii. Also replace the filter membrane with the rough side up. (for instructions refer to page 1-22 in maintenance manual.)

iii. Turn on PE 100 spectrophotmeter; (Note: this must be on in order to start up the software on the computer.)

iv. Turn on computer and go to icon "AA Win LAB Analyst".

v. Go to method; select "Hg CAL 2" then OK.

vi. Wavelength = 253.7; smoothing points =9; measurement = peak height; read time =18sec.; BCC time = 2 sec.

vii. Go to "Sample Info" and enter the order of the samples and other information that may be needed.

viii. Save entered sample list under "Save ….sample info file" Note: description and batch ID are normally the date of analysis.

ix. Go to "auto"; then to set-up. Select Browse in both spaces. One is to bring up your saved "Sample Information" File. The other is to select a results library. Double click on heading and choose.

x. Turn the printer on.

xi. Connect all tubing to the pump and blocks.

xii. Start the pump by going to "FIAS" and click the pump 1 Icon (120).

xiii. The pump will start, then lock down and tighten the tubes onto the pump.

xiv. Turn on the nitrogen tank, it should be above 500 psi on the guage. Replace the nitrogen tank when it is at 500 psi.

xv. The pressure gauge on the PE100 should be just below 100.

xvi. Use the tension adjuster to press down the tubing magazine to the pump head on the top and bottom. Start the pump and then lock them down. This technique needs to be demonstrated so that a new user will be able to understand what is needed here and how to do it.

xvii. Adjust the spring tension tubing until there is a constant "bubble of low rate" coming out to the waste tube.

xviii. Place carrier tubes into carrier and stannous chloride tube into SnCl2. (click valve fill inject and make sure flow is correct and the line is rinsed).

xix. Make sure the permanganate waste bottle is bubbling in order to absorb any Hg vapors which could be vented into the room.

xx. Allow a few minutes for reagents to flow through the system before starting analysis.

xxi. Calibrate: Go to "Auto" click on "Analyze", click on "calibrate".

xxii. "Select Location" enter #'s to be ran, and then press "OK". Samples are done in increments of 10 samples

B. Analyze the calibration standards as below.

1. New calibration points must be analyzed when the ICV analysis is not within ± 5%. **A curve must be analyzed daily for all projects especially USACE and CLP projects.**

2. The curve should be linear with a calculated intercept with a minimum correlation coefficient (r) of $\geq$0.995 (USACE) or 0.998 (other). If not, a new curve must be analyzed.

IX. PROCEDURE

A. Glassware preparation

1. After use, samples are nuetralized and disposed down an acid sink with running water and rinsed with tap water. Or the sample may be discarded into the Mercury waste drum.

2. Acid clean the glassware used for mercury prep as follows:

a. Rinse with low Hg content 1:1 HCl.

b. Rinse with D.I. water.

B. Label the vessels indicating which sample will be in each..

C. Prepare calibration standards as detailed above. Add all reagents to the standards which are added to the samples as outlined below. Record the standard preparation in the digestion log.

D. Sample preparation

1. Transfer 30 mL, or an aliquot diluted to 30 mL of sample to the 30 mL mark on a 50 mL digestion vessel previously marked for this sample.

   NOTE: Normally, **a**n automatic dilution of 10X to 100X is performed for all TCLP extracts. All TCLP samples get one matrix spike unless several come in at one time from the same client with the same matrix. Then one in ten of the same matrix get spiked. Check with your manager.

2. Add 1.5 mL of concentrated sulfuric acid to each vessel and mix.

3. Add 0.75 mL of concentrated nitric acid to each bottle and mix.

4. Add 4.5 mL potassium permanganate solution to each vessel and mix. For sewage samples additional permanganate may be required. Shake and add additional portions of potassium permanganate to the solution if necessary, until the purple color persists for at least 15 minutes (not more than 7.5 mL). If the purple color does not persist after the addition of 7.5 mL $KMnO_4$ the sample must be diluted prior to digestion. Inform your manager that the minimum detection limit cannot be reached for that particular matrix.

   NOTE: The same amount of $KMnO_4$ added to the samples should be present in the standards and blanks.

5. Add 2.4 mL of potassium persulfate to each vessel and mix. Cover.

6. Heat for 2 hours in the block digester at $95\pm2°C$ (the block temperature must be monitored and documented. Record observed temperature, correction factor, and the corrected temperature), cool.

6. Samples may be saved at this point if there is not time to run the whole set that day.

NOTE: Stannous Chloride (VII. A 5.) and 3% HCl (VII. A 8.) are added by the instrument during analysis.

E. Sample analysis

1. Set up the instrument as described in the calibration section above.

2. When ready to run samples, add 1.8 mL of sodium chloride-hydroxylamine chloride to reduce the excess permanganate. Sample analysis must be preceded by the analysis of an ICV with control limits of ±10% for SW846-7470 and ±5 % for 245.1. Followed by the ICB (< ±MDL for USACE or ±RL/CRDL for others and CLP).

3. Each set of ten samples and at the end of the analytical run must be followed by a CCV with control limits of ±20% for SW846-7470 and ±10% for 245.1

4. CCB must always follow the CCV. Control limits are (<±MDL for USACE or ±RL/CRDL for others and CLP). CCB must be run at the beginning and end of a sequence and after every 10 samples. **No analyte must be detected >2xMDL for DOD QSM Ver. 3.**

5. The autosampler log is set up to analyze 106 samples at a time.

Instrument Run Log example:

AS LOC	**Sample ID**
0	Wash
1	0.0
2	0.02
3	0.05
4	0.1
5	0.2
6	0.4
7	0.6
8	1.0
9	ICV
10	ICB
11	LCSW
AS LOC	**Sample ID**
12	PBW
13	Sample
14	Sample
15	Sample
16	Sample
17	Sample
18	Sample
19	Sample
20	Sample
21	CCV

22	CCB
23	Sample
24	Sample
25	Sample
26	Sample
27	Sample
28	Sample
29	Sample
30	Sample
31	MS
32	MSD
33	FCV
34	FCB

F. Data reporting

1. Reduce data to result which will be reported.

2. Complete the data review checklist (attached). Must be completed and attached to each set of USACE data.

X. CALCULATIONS

A. Apply a least squares fit to the calibration standards plotting µg Hg/L versus the absorbance. For the concentration of the standards, assume 30 mL of solution volume (the 0.1 µg Hg standard will be input as 1.0 µg Hg/L) (0.1µg Hg / 0.030 L solution).

B. Input the sample absorbance into the mercury spreadsheet making sure that you are using the correct spreadsheet for the matrix of the sample.

C. Also make sure that the appropriate dilution factor is inputted in the correct space on the spreadsheet.

D. Report the data as µg Hg/L of sample.

XI. QUALITY CONTROL (Reference SW-846, 7470A Update III, USEPA CLP ILMO 4.1 or 245.1, Rev 3.0, 5/94 for further clarification)

A. Daily

1. **The instrument must be calibrated daily for all projects.**

2. Begin each analysis with an ICV(QCS) second source. The control limits are ±10% and IPC(CCV) for 245.1, limits are ± 5% and subsequent analyses are ± 10%.

3. Analyze ICB. Control limits (<±MDL for USACE or ±RL/CRDL for others and CLP)., depending on method. **No analyte detected >2xMDL for DOD QSM Ver. 3.**

4. If the ICV(QCS) is not in control a new curve must be analyzed prior to sample analysis.

5. If the IPC(initial CCV) for 245.1 is not within the limits of ±5%, try preparing another undigested CCV and reanalyzing before recalibrating. If this fails then a recalibration is necessary.

6. Follow each set of 10 samples with a CCV and also must end up with a CCV after the last sample. The control limits are ±20% for SW846-7470 and ± 10% for 245.1.

7. A CCB must always follow a CCV, the control limit is (<±MDL for USACE or ±RL/CRDL for others and CLP). CCB must be run at the beginning and end of a sequence and after every 10 samples. **No analyte detected >2xMDL for DOD QSM Ver. 3.**

B. Quarterly or as needed when doing straight CLP work.

1. IDL's for CLP 4.1.

C. Digestion

1. LCS data should be maintained and available for easy reference or inspection.

2. Preparation blank (<1/2 ±RL or ±RL/CRDL for common contaminates (DOD) and ±RL/CRDL for others and CLP).

a. Employ a minimum of one preparation blank per sample batch to determine if contamination or any memory effects are occurring. The preparation blank is taken through the same digestion/preparation steps as the samples being tested. The result for the preparation blank must be below the method detection limit. If not, the analyst must use good judgment to evaluate the impact upon the associated samples. There is no impact if an associated sample is below the method detection limit nor if the level in the sample is greater than 10X the level found in the

preparation blank. If the level of mercury in a sample is above the method detection limit but less than 10X the level found in the preparation blank, the sample must be redigested and reanalyzed or the data must be qualified on the final report. The project manager or QA manager will make this determination.

3. Laboratory control sample (LCS)

   a. Employ a minimum of one laboratory control sample (LCS) per sample batch to verify the digestion procedure. The LCS is taken through the same digestion/preparation steps as the samples being tested. The minimum control limits are ±20% for SW846-7470 and ±15% for 245.1. If the LCS is not in control, the impact upon the client data should be evaluated and the associated sample(s) should be either redigested or the data should be qualified. The project manager or QA Officer will make this determination.

D. Sample matrix

1. Analyze one replicate sample for every twenty samples. A replicate sample is a sample brought through the whole sample preparation and analytical process in duplicate. It is acceptable to substitute a matrix spike duplicate for the sample replicate. CLP does not allow this. Project specific requirements will take precedence in these situations.

2. Analyze one spiked sample and spiked sample duplicate for every twenty samples. A replicate sample is a sample brought through the whole sample preparation and analytical process in duplicate. Project specific requirements will take precedence in these situations. CLP requires 1 duplicate and 1 spike per batch. If the analyte level in the sample is not greater than four times the spiking level, the spike recoveries should be within ±25% of the true value (**± 20% for DOD projects**). If not, check with supervisor to determine appropriate action. The final analytical report must document this situation.

   NOTE: For TCLP extracts, a matrix spike must be performed for each different matrix. The method of standard additions must be used if the sample spike recovery is not at least 50% and the concentration of Hg does not exceed the regulatory level and if the concentration of Hg measured in the extract is within 20% of the regulatory level.

3. The relative percent difference (RPD) between replicate determinations is to be calculated as referenced in the laboratory QA manual. (A control limit of ± 20% RPD shall be used for sample values greater than ten times

the instrument detection limit.) Supervisor must be notified if the control limit is not met. Supervisor will determine corrective action if required. The final analytical report must document this situation.

4. For 245.1 analyze one serial dilution (1 to 5 dilution) for every 20 samples or per analytical batch, whichever is more frequent. Percent recovery should be ±10%. The concentration of the original sample should be a minimum of 50X the IDL in order to apply the recovery criterion; if not, the serial dilution approach is not used.

5. When the sample matrix is so complex that viscosity, surface tension, and components can not be accurately matched with standards, the method of standard addition (MSA) is recommended. Section 8.6 of SW846-7000A provides tests to evaluate the need for using the MSA.

E. Method Detection Limit (MDL), Empirical Laboratories' Reporting Limit (ERL), Contract Required Quantitation Limit (CRQL) and Analyte Wavelength:

TABLE I

Aqueous Method Detection Limits(MDL), Empirical Laboratories' Reporting Limits(ERL), CLP OLM04.1 & OLM05.2 Contract Required Quantitation Limits (CRQL)				
Mercury by EPA 245.1, 7470A, SOW 4.1 & 5.2	**AQUEOUS MDL(ug/L)**	**AQUEOUS ERL(ug/L)**	**AQUEOUS CRQL ILMO 4.1 (ug/L)**	**AQUEOUS CRQL ILMO 5.2 (ug/L)**
Mercury	0.08	0.20	0.2	0.2

TABLE 2

ANALYTE	**WAVELENGTH**
Mercury	**253.7**

XII. CORRECTIVE ACTIONS

A. INSTRUMENT RELATED

1. ICV(**QCS for 245.1**)- second source not within ± 10%.
   a. If the problem is with the solution.
      i. Reprepare, obtain new stock if necessary.
   b. If the problem is with the calibration.
      i. Recalibrate through analysis of appropriate standards and recheck ICV.
2. CCV not within ± 20% for SW846 and ±10% for (**245.1, ± 5% for initial IPC and + 10% for subsequent IPCs**)
   a. If the problem is with the solution.
      i. Reprepare, obtain new stock if necessary.
   b. If the problem is with the calibration.
      i. Recalibrate through analysis of appropriate standards and reprepare/reanalyze the previous ten sample according the following guidelines.
         a. If the CCV was biased high, any of the previous ten samples which were below the detection limit do not require reanalysis.
         b. If the CCV was biased low, the previous ten samples must be reanalyzed.

B. DIGESTION RELATED

1. The preparation blank less than <1/2 RL or ±RL/CRDL for common contaminates (DOD) and ±RL/CRDL for others and CLP.

   a. If the problem is with the instrument or stannous chloride.
      i. Analyze a reagent blank to determine the stannous chloride and the instrument are behaving properly. If this check has detectable mercury, reprepare the stannous chloride or determine if there are any problems with the instrument. Contact supervisor immediately.

   b. If the problem is with the digestion.

i. All associated samples which are below the RL, CRDL or have a level of mercury greater than 5X the level found in the preparation blank can be reported. If the level of mercury in an associated sample is not BMDL nor greater than 5X the level found in the preparation blank, the sample must be redigested/reanalyzed or reported as qualified. The project manager or QA manager will make this determination.

2. LCS not within control limits (or ±20%, ± 15% for **245.1**).
   a. If the problem is with the instrument.
      i. Reanalyze when instrument is in control if further sample bottles are available.
   b. Is the problem is with the digestion.
      i. If biased low, associated samples must be redigested.
      ii. If biased high, the impact upon the data user must be evaluated. The samples will be redigested or the data will be qualified on the final report.

C. SAMPLE MATRIX RELATED

1. Replicate analysis RPD not within ±20%
   i. The associated sample data must be qualified on the final report.

2. Spike analysis recovery not within ±25%(**± 20% for DOD projects**)
   i. If the analyte level in the sample is greater than 4X the spiking level, the %recovery can not be evaluated and no action is taken.
   ii. If the analyte level in the sample is not greater than 4X the spiking level, the associated sample data must be qualified on the final report. TCLP extracts must be evaluated as in section XI.D.2 above. The associated sample data must be qualified on the final report.

3. When the sample matrix is so complex that viscosity, surface tension, and components can not be accurately matched with standards, the method of standard addition (MSA) is recommended. Section 8.6 of SW846-7000A provides tests to evaluate the need for using the MSA.

XIII. WASTE DISPOSAL and POLLUTION PREVENTION

Please see Waste Disposal SOP-405, for instruction of proper disposal of waste generated from this area.

Quantity of chemicals purchased should be based on expected usage during its shelf-life and the disposal cost of unused material. Actual reagent preparation volumes should reflect anticipated usage and reagent stability.

XIV. REFERENCES

1. *Test Methods for Evaluating Solid Waste Physical/Chemical Methods, SW-846; Third Edition (Update III)*; Method 7470A

2. USEPA *Code of Federal Requlations, 40, CH 1,PT 136;* Method 245.1; APX-B

3. USEPA *Contract Laboratory Program(CLP) for Inorganics ILM04.1; ILM05.2*

XV. DEFINITIONS

1. Refer to SOP-431 for common definitions.

ADDENDUM FOR USEPA SOW ILM05.2

1. The CCV concentration must be different from the ICV.

2. The same CCV shall be used throughout analysis for an SDG.

3. Calibration standards must be within 5% of the standard concentration.

4. A CRA must be analyzed after the ICV/ICB and after each batch of 20 samples, but before the final CCV/CCB. The control limit is ±30%.

5. Spike samples at 1 ug/L for water.

ANALYST DATA REVIEW CHECKLIST

Sample Number(s):
Batch Number(s):
Method: 7470A (Mercury)

QA/QC Item	Yes	No	NA	Second Level Review
1. Were samples analyzed within USACE holding times?				
2. Was initial calibration curve QC criteria met?				
3. Was all continuing calibration criteria in control?				
4. Did any sample exceed the highest calibration standard? (If yes, were appropriate dilutions made to generate samples concentration within calibration range?)				
5. Did LCS or blank spike meet control limits?				
6. Did MS/MSD meet control limits?				
7. Was the preparation (Method) Blank below the project required detection limits?				
8. Did you return samples back to cold storage immediately after use?				
9. Was water bath temperature monitored/documented and did you apply the thermometer correction factor?				
10. Sample preparation information is correct and complete.				

11. Analytical results are correct and complete.	_____	_____	_____	_____
12. The appropriate SOP's have been used and followed.	_____	_____	_____	_____
14. "Raw data" including all manual integration's have been correctly interpreted.	_____	_____	_____	_____
15. "Special" sample preparation and analytical requirements have been met.	_____	_____	_____	_____
16. Documentation complete (e.g., all anomalies in the analytical sequence have been documented, corrective action forms are complete.	_____	_____	_____	_____

Comments on any "No" response:

_____

_____

_____

_____

_____

_____

Analyst: _____ Date: _____

Second-Level Review: _____ Date: _____

MERCURY ANALYSIS IN SOIL/SEDIMENT BY MANUAL COLD VAPOR TECHNIQUE

METHODS SW846 7471A 7471B, EPA 245.5 and CLPILM 04.1 (NJDEP does not accept CLPILM 04.1 after June, 2003), Addendum for USEPA CLP ILM 05.2

SOP NUMBER: SOP-104

REVISION NUMBER: 17

APPROVED BY:

SECTION MANAGER

TECHNICAL DIRECTOR

EFFECTIVE DATE: 01/29/09

DATE OF LAST REVIEW 01/29/09

MERCURY ANALYSIS IN SOIL/SEDIMENT BY MANUAL COLD VAPOR TECHNIQUE

References:
SW846 Method 7471A, 7471B
USEPA Method 245.5, CLP SOW ILM04.1
See Addendum for CLP SOW ILM05.2

I. SCOPE AND APPLICATION:

A This procedure measures total mercury (organic and inorganic) in soils, sediments, bottom deposits and sludge type materials.

B. The range of the method is 0.2 to 2 µg/g. The range may be extended above or below the normal range by increasing or decreasing sample size or through instrument and recorder control.

II. SUMMARY OF METHOD:

A. A weighed portion of the sample is acid digested for 2 minutes at 95±2°C, followed by oxidation with potassium permanganate and with a secondary digestion at 95°C for 30 minutes. Mercury in the digested sample is then measured by the conventional cold vapor technique.

III. SAMPLE HANDLING AND PRESERVATION:

A. Because of the extreme sensitivity of the analytical procedure and the omnipresence of mercury, care must be taken to avoid extraneous contamination. Sampling devices and sample containers should be ascertained to be free of mercury; the sample should not be exposed to any condition in the lab that may result in contact with solid, liquid or airborne mercury.

B. Refrigerate solid samples at 4°C (±2°C) upon receipt until digestion and analysis.

C. The sample should be analyzed without drying. A separate percent solids determination is required

D. The holding time for digestion of mercury samples is 28 days.

IV. INTERFERENCES:

A. Potassium permanganate is added to eliminate possible interference from sulfide. Concentrations as high as 20 mg/Kg of sulfide, as sodium sulfide, do not interfere with the recovery of added inorganic mercury in reagent water.

B. Copper has also been reported to interfere; however, copper concentrations as high as 10 mg/Kg had no effect on recovery of mercury from spiked samples.

C. Samples high in chlorides require additional permanganate (as much as 12.5 mLs) because, during the oxidation step, chlorides are converted to free chlorine, which also absorbs radiation of 253 nm. Care must therefore be taken to ensure that free chlorine is absent before the mercury is reduced and swept into the cell.

D. Certain volatile organic materials that absorb at this wavelength may also cause interference. A preliminary run without reagents should determine if this type of interference is present.

V. SAFETY

A. Normal accepted laboratory practices should be followed while performing this procedure.

B. The toxicity and carcinogenicity of each reagent used in this method has not been fully established. Each chemical should be regarded as a potential health hazard and exposure to these compounds should be minimized by good laboratory practices. Normal accepted laboratory safety practices should be followed during reagent preparation and instrument operation. Always wear safety glasses or full-face shield for eye protection when working with these reagents. Each laboratory is responsible for maintaining a current safety plan, a current awareness file of OSHA regulations regarding the safe handling of the chemicals specified in this method.

C. Mercury compounds are highly toxic if swallowed, inhaled, or absorbed through the skin. Analyses should be conducted in a laboratory exhaust hood. The analyst should use chemical resistant gloves when handling concentrated mercury standards.

VI. EQUIPMENT/APPARATUS:

A. Perkin Elmer Flow Injection Mercury System (FIMS)

B. Perkin Elmer AS 90

C. Mercury lamp

D. Environmental Express Mod-Block digestion block capable of holding 95±2°C for 2 hours

E. A scale or balance capable of weighing to 0.01 ± 0.02 gram.

F. Snap cap digestion polypropylene vessels for use with the mod block digester. **Five vessels of each lot must be taken through analysis to check for mercury**

G. Polypropylene watch glasses suitable for use with the above vessels in F above.

H. Manual Sample Mill

I. Wiley Sample Mill

J. Clippers for cutting vegetation

VII. REAGENTS AND STANDARD PREPARATION:

A. REAGENTS

1. Reagent Water: Reagent water will be interference free. All references to water in this method refer to reagent water unless otherwise specified.

2. Aqua Regia: Prepare immediately before use by carefully adding three volumes of concentrated HCl to one volume of concentrated HNO_3. Both HNO_3 and HCl must be of the reagent grade suitable for mercury determinations.

   NOTE: This reagent is required for use when USACE project samples are being digested.

3. Concentrated HCl.

4. Concentrated HNO_3.

5. Stannous chloride in a one liter volumetric flask add ~500 mL D.I. H_2O, 30 mL concentrated HCl, and 11g stannous chloride crystals. Swirl to mix and dilute to 1 L.

6. Sodium chloride-hydroxylamine chloride solution: Dissolve 120 g of sodium chloride and 120 g of hydroxylamine sulfate in reagent water and dilute to 1 L. Note : this is normally made up 2 liters at a time.

7. Potassium permanganate, mercury-free, 5% solution (w/v): Dissolve 200 g of potassium permanganate in 4 L of reagent water.

8. 3 % HCl carrier solution: 30 mL HCl – 1 L DI H20; Prepare fresh daily.

9. Potassium persulfate 5% solution: Dissolve 100g in 2 liters of D.I. water. Used with digestion of CLP soils.

B. STANDARDS

1. Traceability

a. A bound logbook record shall be maintained on all reference materials. The record shall include date of receipt, source, purity, all compositional information, storage conditions and expiration date. These materials/solutions are to be identified by a unique number in the logbook as well as on the container's label.

b. All working standards made from reference materials shall be labeled with a unique ID number with complete information on preparation date, concentration of each compound, solvent, preparer's name, expiration date. Reagents shall be labeled with date received and expiration date, if applicable. All of the information described above shall also be recorded in a bound logbook. Measurements made during standards preparation (e.g., from weighing operations, volume diluted to, etc.) shall also be recorded. There should be no container with sample, sample extract, standard solution, etc. that is not correctly labeled and properly stored.

c. The analyst must initial and date each entry made in a logbook. Each analyst must be sure to "Z" out the unused area of each logbook page.

2. Preparation

NOTE: All standard solutions should be prepared using class A volumetric flasks, class A volumetric pipettes (or calibrated Eppendorfs). All Standards, blanks, and samples are taken through the digestion process.

a. Stock mercury solution: (100 µg/mL). Order from manufacturer already prepared. This solution is given a unique identifier.

b. Primary source and secondary source mercury standard solutions: dilute 2 mL of stock solution to 1000 mL in a 1000 mL volumetric flask, with 1.5 mL concentrated HNO_3 (200 ug/L).

c. Calibration standards

   i. Prepared from the primary source standard. The preparation of the calibration standards, etc. is described below.

      a. Dilute the volumes below to 5 mLs in a 70 mL polypropylene vessel. (Note: The standards are diluted to 5 mLs for the initial step of the digestion.)

ug/L Hg	mLs of 200 ug/L standard in 50 mL
0.20	0.050
0.50	0.125
1.0	0.25
2.0	0.50
4.0	1.0
6.0	1.5
10.0	2.5

   ii. Appropriate reagents are added as below in the sample preparation section.

   iii. Prepare one vessel of each.

   iv. It is necessary to digest the calibration standards when following all mercury methods.

e. Calibration verification standards

   i. Initial calibration verification (ICV) solution – 4.0 ug/L

      a. Prepared from the secondary source mercury standard (200 ug/L).

      b. Prepared by diluting 1.0 mL of the second source mercury standard to 5 mLs in a polypropylene digestion vessel.

      c. Appropriate reagents are added as below in the sample preparation section.

d. It is necessary to digest the ICV standards when using all mercury methods for soil.

ii. Continuing calibration verification (CCV) solution

a. Prepared from the primary or secondary source mercury standard. The concentration is alternated from 2.0 ug/L to 4.0 ug/L every 20 samples.

b. Prepared by diluting 0.50 for a 2.0 ug/L and 1.0 mL for a 4.0 ug/L of the secondary 200 ug/L standard to 5.0 mL with reagent water in a polypropylene digestion vessel.

c. Appropriate reagents are added as below in the sample preparation section.

d. It is necessary to digest the CCV standards when following all mercury methods for soil.

f. Digestion standards

1. Laboratory control sample

a. The Laboratory Control Sample (LCS) is prepared from the secondary source mercury standard (200 ug/L) and added to ~ 0.3 grams of teflon chips.

b. Prepared by diluting 0.50 mL of the secondary mercury standard (200 ug/L) to 5 mLs in a polypropylene digestion vessel with 0.30 grams of teflon chips.

c. Appropriate reagents are added as below in the sample preparation section.

d. This solution is given a unique identifier in the digestion log.

2. Matrix Spikes

a. Prepared from the primary or secondary source mercury standard (200 ug/L).

b. Prepared by adding 0.50 mL of the mercury standard (200 ug/L) to the sample in a polypropylene digestion vessel. Project specific requirements may over-ride the spiking level.

c. Appropriate reagents are added as below in the sample preparation section.

VIII. CALIBRATION:

A. Set up the instrument with proper operating parameters.

1. Perkin Elmer Flow Injection Mercury System (FIMS)

a. Prepare the instrument for calibration by the following steps:

i. Replace any old tubing that is around the pump cylinder. The sample transfer tubing connected to the seperator cover must not have any moisture in it. If it does replace it. **(Perkin-Elmer tygon tubing, waste and carrier 1.52mm I.D.,waste only 3.17mm I.D., stannous chloride 1.14mm I.D.)**

ii. Also replace the filter membrane with the rough side up. (for instructions refer to page 1-22 in maintenance manual.)

iii. Turn on PE 100 spectrophotometer; (Note: this must be on in order to start up the software on the computer.)

iv. Turn on computer and go to icon "AA Win LAB Analyst"

v. Go to method; select "Hg CAL 2" then OK.

vi. Wavelength = 253.7; smoothing points =9; measurement = peak height; read time = 18 sec.; BCC time = 2 sec.

vii. Go to "Sample Info" and enter the order of the samples and other information that may be needed.

viii. Save entered sample list under "Save …sample info file" Note: description and batch ID are normally the date of analysis.

ix. Go to "auto"; then to set-up. Select Browse in both spaces. One is to bring up your saved "Sample Information." File. The other is to select a results library. Double click on heading and choose.

x. Turn the printer on.

xi. Connect all tubing to the pump and blocks.

xii. Start the pump by going to "FIAS" and click the pump 1 Icon (120).

xiii. The pump witll start, then lock down and tighten the tubes onto the pump.

xiv. Turn on the nitrogen tank, it should be >500 psi on the guage. Replace the nitrogen tank when it is at 500 psi.

xv. The pressure gauge on the PE100 should be just below 100.

xvi. Use the tension adjuster to press down the tubing magazine to the pump head on the top and bottom. Start the pump and then lock them down. This technique needs to be demonstrated so

that a new user will be able to understand what is needed here and how to do it.

xvii. Adjust the spring tension tubing until there is a constant "bubble of low rate" coming out to the waste tube.

xviii. Place carrier tubes into carrier and stannous chloride tube into SnCl2. (click valve fill inject and make sure flow is correct and the line is rinsed)

xix. Make sure the permanganate waste bottle is bubbling in order to absorb any Hg vapors which could be vented into the room.

xx. Allow a few minutes for reagents to flow through the system before starting analysis.

xxi. Calibrate: Go to "Auto" click on "Analyze", click on "calibrate".

xxii. "Select location" enter the #'s of the samples to be analyzed, then "OK".

B. Analyze the calibration standards as below.

1. A curve must be analyzed daily for all projects. A new curve must be analyzed when the ICV analysis is not within ±10% for SW846 7471A and 245.5 methods, or ±20% for 7471B.

2. The curve should be linear with a calculated intercept with a minimum correlation coefficient(r) of $\geq$0.995 (USACE) or 0.998 (other). If not, a new curve must be analyzed.

3. **CLP requires a blank + 5 calibration standards (0, .02, .05, .1, .5 and 1.0 µg). (One standard must be at CRDL or IDL whichever is greater.)**

IX. PROCEDURE:

A. Prepare calibration standards as detailed above. Add all reagents to the standards which are added to the samples as outlined below. Record the standard preparation in the standard log.

B. Sample preparation

It is extremely important that waste (when appropriate), soil and sediment samples be mixed thoroughly to ensure that the sample is as representative as possible of the sample media. The most common method of mixing is referred to as quartering. The quartering procedure should be performed as follows:

- The material in the sample pan(inorganic-plastic/organic-aluminum) should be divided into quarters and each quarter should be mixed individually.

- Two quarters should then be mixed to form halves.
- The two halves should be mixed to form a homogenous matrix.

This procedure should be repeated several times until the sample is adequately mixed.

NOTE: Samples that are clay type materials must be handled in a different manner. Due to these type sample matrices having an affinity to stick to most anything that touches it, another approach must be followed. Obtain a representative sub-sample aliquot from the center or middle section of the sample container.

Grinding of Vegetation Samples

Remove sample from shipping container and brush off dirt particles. Chop sample into about half inch pieces with clippers or other cutting tool. Place the sample in an aluminum pan and air-dry in an exhaust hood to the appropriate dryness for grinding. It should be dry enough where it won't stick to the inside of the mill. Grind the dried sample to fineness in either the manual sample mill or the Wiley mill or both if needed. Place the ground sample in a container and label immediately.

1. Transfer 0.30 g (for USACE work use anywhere from 0.20 to 1.0 g and record the weight in the digestion log) of sample to a polypropylene digestion vessel previously marked for this sample. Record the exact sample mass on the bottle and in the digestion log. (Note: the balance must be calibrated for the specific task. Calibrate by weighing a 0.5 and a 0.1g weight on the balance along with a digestion vessel. Record in specific balance calibration log.)

2. Add 2.5 mL of reagent water, and 2.5 mL of aqua regia and mix for samples. Add 2.5 mL of aqua regia to standards and mix.

3. Cover samples and standards with watch glasses and heat for 2 minutes in the hot block at 95$\pm$2°C (The hot block temperature must be monitored and documented. Record observed temperature, correction factor, and the corrected temperature).

4. Cool, bring to 30 ml with D.I. water

5. Add 7.5 mL potassium permanganate solution to each vessel and mix. For sewage samples additional permanganate may be required. Shake and add additional portions of potassium permanganate to the solution if necessary, until the purple color persists for at least 15 minutes (not more than 12.5 mL).

NOTE: The same amount of $KMnO_4$ added to the samples should be present in the standards and blanks.

6. Heat for 30 minutes on the hot block at 95±2°C (The temperature must be monitored and documented. Record observed temperature, correction factor, and the corrected temperature), cool. Samples may be saved at this point if there is not time to run the whole set that day.

7. Add 3 mLs of sodium chloride-hydroxylamine chloride solution to each vessel.

8. Bring to 50 ml with D.I. water both standards and samples. Cap mix and vent to decolor and release Cl gas. The samples are now ready for analysis.

NOTE: Stannous Chloride (VII. A 5.) and 3% HCl (VII. A 8.) are added by the instrument during analysis.

C. Sample analysis

1. Set up the instrument as described in the calibration section above.

2. When ready to run samples, transfer samples and standards to autosampler tubes and load the auto sampler according to the sample information sheet set up previously. If chlorides are suspected, purge the head space in the polyethylene tube for at least 1 minute to get rid of any chlorine gas collected there. After a delay of at least 30 seconds the sample is ready for step "3". **NOTE:** When aqua-regia is added assume that all samples and standards have chlorine and treat accordingly. Purging the samples of chlorine is accomplished by putting a pasteur pipette on the end of some air tubing hooked to a fish pump. The pasteur pipette is then placed at an angle into the top of the polyethylene vessel without breaking the surface of the sample. It takes about one minute to purge the air above the sample of chlorine.

3. Analysis must be preceded by the analysis of an ICV (concentration at or near mid range) with control limits of ±10% for SW846-7471A or ±20% for 7471B and ±5% for 245.5 methods.

4. The ICB must follow the calibration standards (<±MDL (USACE) or ±RL/CRDL for other or CLP), but not before the ICV. **No analyte must be detected > 2xMDL for DOD QSM Ver. 3.**

5. Each set of ten samples must be followed by a CCV with control limits of ±20% for SW846-7471A and B and ±10% for 245.5 method. The run must also end with a CCV, then CCB.

6. Analyze CCB after calibration and each CCV. The CCB frequency is 10% or every 2 hours whichever is more frequent. (control limit is < ±MDL or ±RL/CRDL for other or CLP). **For DOD QSM Ver.3 CCB at beginning and end of sequence and after every 10 samples. No analyte detected > 2xMDL.**

7. Instrument Run Log example:

AS LOC	Sample ID
0	Wash
1	0.0
2	0.O2
3	0.05
4	0.1
AS LOC	**Sample ID**
5	0.2
6	0.4
7	0.6
8	1.0
9	ICV
10	ICB
11	LCSW
12	PBW
13	Sample
14	Sample
15	Sample
16	Sample
17	Sample
18	Sample
19	Sample
20	Sample
21	CCV
22	CCB
23	Sample
24	Sample
25	Sample
26	Sample
27	Sample
28	Sample
29	Sample
30	Sample
31	MS
32	MSD
33	FCV
34	FCB

8. Sample analysis:

   i. Go to "Analyze", "select location" and type in the range of numbers needed to complete analysis. (ie. 9-54). Press enter and the autosampler will proceed to enter the selected range. NOTE: Check standards are loaded as part of the tray.

   ii. Make sure that the sample wash beaker is filled with 3% HCl.

   iii. Dilute and reanalyze samples that are more concentrated than within 10% of the high standard. Soil sample dilutions are made from the digested aliquot. Sample concentration results that are below the calibration curve but above the MDL are reported flagged as estimated, ("B" flag).

D. Data reporting

1. Reduce data to result which will be reported using the soil spreadsheet found on the network..

2. Complete the data review checklist (attached). Must be completed and attached to each set of USACE data.

X. CALCULATIONS:

A. Pull up the blank spreadsheet at K:\wcm\tests\mercury and fill in all the information pertinent to the current analysis. Save as the date of analysis. This information can be obtained from your mercury digestion log.

B. Input the sample absorbance into the excel spreadsheet in the appropriate cell. The spreadsheet uses the current calibration to calculate the Hg results.

C. Make sure that the appropriate dilution factors are entered into the spreadsheet in the correct cells.

D. The spreadsheet should divide the result which is the µg Hg obtained from the sample mass by the sample mass in grams. This will yield a result of µg Hg/g sample on a wet weight basis. Calculations in the spreadsheet should be checked occassionally to make sure that they are working correctly.

E. If available, divide the result by the %solids to obtain the result on a dry weight basis.

F. Report the data as µg Hg/g of sample (mg/kg wet or mg/kg dry when % solids are available).

XI. QUALITY CONTROL (Reference SW-846, 7471A Update III, 7471B Revision 2 February 2007, USEPA CLP ILMO 4.1 or EPA 245.5 for further clarification)

A. Daily

1. **The instrument must be calibrated daily for all projects.**

2. Begin each analysis with an ICV. The control limits are ±10% for 7471A and 245.5, ±20% for 7471B.

3. Analyze ICB. Control limit is **<± MDL** or ±RL/CRDL for other or CLP. **For DOD QSM Ver. 3, no analyte detected > 2x MDL.**

4. If the ICV is not in control a new curve must be analyzed prior to sample analysis.

5. Follow each set of 10 samples with a CCV and also must end up with CCV after last sample. The control limits are ±20% for SW846-7471A, SW846 7471B and for 245.5. If an exceedance occurs, analyze another CCV, if the second CCV fails, then a new calibration curve should be generated and all affected samples should be reanalyzed.

6. Follow each CCV with a CCB. Control limit is **< ±MDL** or ±RL/CRDL for others or CLP. **For DOD QSM Ver. 3, no analyte detected > 2x MDL.**

B. Quarterly

1. IDLs for CLP (Follow SOP - 414).

C. Annually

1. MDLs must be analyzed for all matrixes (Follow SOP - 414).

D. Digestion

1. LCS data should be maintained and available for easy reference or inspection.

2. Preparation blank (< ±½ RL or ±RL for common contaminates or ±RL/CRDL for others or CLP)

a. Employ a minimum of one preparation blank per sample batch to determine if contamination or any memory effects are occurring. The preparation blank is taken through the same digestion/preparation steps as the samples being tested. The result for the preparation blank must be < ± ½ RL for USACE or ±RL/CRDL for others or CLP. If not, the analyst must use good judgment to evaluate the impact upon the associated samples. There is no impact if an associated sample is below the method detection limit or if the level in the sample is greater than 10X the level found in the preparation blank. If the level of mercury in a sample is above the method detection limit, but less than 10X the level found in the preparation blank, the sample must be redigested and reanalyzed or the data must be qualified on the final report. The project manager or QA officer will make this determination.

3. Laboratory control sample (LCS).

a. Employ a minimum of one LCS per sample batch to verify the digestion procedure.. The LCS is taken through the same digestion/preparation steps as the samples being tested. The minimum control limits are ±20% for SW846-7471A, 7471B and 245.5 solid samples. An LCS will accompany each batch of soil samples. If the LCS is not in control, the Inorganic Manager and QA Officer must be notified immediately. Several possibilities exist at this point and a thorough investigation and data evaluation is essential. The first question is to evaluate the impact upon the data. All samples may need to be retested or flagged with the appropriate qualifier. The next question is to find out why it occurred and to proceed with a corrective action plan to prevent reoccurrence. This corrective action is documented in a CAR.

E. Sample matrix

1. Analyze one replicate sample for every twenty samples or per analytical batch, whichever is more frequent. A replicate sample is a sample brought through the whole sample preparation and analytical process in duplicate. It is acceptable to substitute a matrix spike duplicate for the sample replicate. Project specific requirements will take precedence in these situations.

2. Analyze one spiked sample and spiked sample duplicate for every twenty samples or per analytical batch, whichever is more frequent. A replicate sample is a sample brought through the whole sample preparation and analytical process in duplicate. Project specific requirements will take precedence in these situations. CLP requires 1 duplicate and 1 spike per

batch. If the analyte level in the sample is not greater than four times the spiking level, the spike recoveries should be within ±25% for 7471A and ±20% for 7471B of the true value(**±20% for DOD projects**). If results do not fall within the control limit-redigestion/reanalysis may be required. If reanalysis is not required, the associated batch of samples will be flagged accordingly. Discuss the situation with your supervisor. A Corrective Action Report (CAR) must be filled out and attached to the data as well as emailed or sent to the supervisor when the control limits are exceeded.

3. The relative percent difference (RPD) between replicate determinations is to be calculated as referenced in the laboratory QA manual. (A control limit of ± 20% RPD (non-aqueous samples may routinely exceed this amount) shall be used for sample values greater than ten times the instrument detection limit.) Supervisor must be notified if the control limit is not met. Supervisor will determine corrective action if required. The final analytical report must document this situation. A Corrective Action Report (CAR) must be filled out and attached to the data as well as emailed or sent to the supervisor when the control limits are exceeded.

4. For 245.5 analyze one serial dilution (1 to 5 dilution) for every 20 samples or per analytical batch, whichever is more frequent. Percent recovery should be 10%. The concentration of the original sample should be a minimum of 50X the IDL in order to apply the recovery criterion; if not, the serial dilution approach is not used.

5. When the sample matrix is so complex that viscosity, surface tension, and components can not be accurately matched with standards, the method of standard addition (MSA) is recommended. Section 8.6 of SW846-7000A provides tests to evaluate the need for using the MSA.

F. Method Detection Limit (MDL), Empirical Laboratories' Reporting Limit (ERL), Contract Required Quantitation Limit (CRQL) and Analyte Wavelength:

TABLE I

Solid/Soil Method Detection Limits(MDL), Empirical Laboratories' Reporting Limits(ERL), CLP OLM04.1 & OLM05.2 Contract Required Quantitation Limits (CRQL)				
Mercury by EPA 245.1, 245.5, 7471A, SOW 4.1 & 5.2	**SOLID/SOIL MDL (mg/Kg)**	**SOLID/SOIL ERL (mg/Kg)**	**SOLID/SOIL CRQL ILMO 4.1 (mg/Kg)**	**SOLID/SOIL CRQL ILMO** 5.2 (mg/Kg)

Mercury	0.0157	0.033	0.1	0.1

TABLE 2

ANALYTE	WAVELENGTH
Mercury	**253.7**

XII. CORRECTIVE ACTIONS

A. INSTRUMENT RELATED

1. ICV not within ± 10% (SW846) and (245.5)
   a. If the problem is with the solution.
      i. Reprepare, obtain new stock if necessary.
   b. If the problem is with the calibration.
      i. Recalibrate thru analysis of appropriate standards and recheck ICV.

2. CCV not within ± 20% (SW846) and (245.5)
   a. If the problem is with the solution.
      i. Reprepare, obtain new stock if necessary.
   b. If the problem is with the calibration.
      i. Recalibrate thru analysis of appropriate standards and reprepare/reanalyze the previous ten sample according the following guidelines.
         a. If the CCV was biased high, any of the previous ten samples which were below the minimum detection limit do not require reanalysis.
         b. If the CCV was biased low, the previous ten samples must be reanalysed.

B. DIGESTION RELATED

1. The preparation blank less than ± ½ RL for DOD or ±RL/CRDL for others or CLP.
   a. If the problem is with the instrument or stannous chloride.
      i. Analyze a reagent blank to determine the stannous chloride and the instrument are behaving properly. If this check has detectable mercury, reprepare the stannous chloride or determine if there are any problems with the instrument.
      ii. If the problem was with the instrument or the stannous chloride and the situation is corrected continue analysis with a second aliquot of the preparation blank.
   b. If the problem is with the digestion.

i. All associated samples which are below the method detection limit (MDL) or have a level of mercury greater than 10X the level found in the preparation blank can be reported. If the level of mercury in an associated sample is not <MDL nor greater than 10X the level found in the preparation blank, the sample must be redigested/reanalyzed or reported as qualified. The project manager or QA manager will make this determination.

2. LCS not within control limits.
   a. If the problem is with the instrument.
      i. Reanalyze when instrument is in control with another aliquot of the sample.
   b. If the problem is with the digestion.
      i. If biased low, associated samples must be redigested.
      ii. If biased high, the impact upon the data user must be evaluated. The samples will be redigested or the data will be qualified on the final report.

C. SAMPLE MATRIX RELATED

1. Replicate analysis RPD not within ±20%
   i. The associated sample data must be qualified on the final report.
2. Spike analysis recovery not within ±25% 7471A and ±20% 7471B (**±20% for DOD projects**)
   i. If the analyte level in the sample is greater than 4X the spiking level, the %recovery can not be evaluated and no action is taken.
   ii. If the analyte level in the sample is not greater than 4X the spiking level, the associated sample data must be qualified on the final report. A corrective action report must accompany the data and be emailed or given to the superviser.

XIII. WASTE DISPOSAL and POLLUTION PREVENTION

Please see Waste Disposal SOP-405, for instruction of proper disposal of waste generated from this area.

Quantity of chemicals purchased should be based on expected usage during its shelf-life and the disposal cost of unused material. Actual reagent preparation volumes should reflect anticipated usage and reagent stability.

XIV. REFERENCES

1. *Test Methods for Evaluating Solid Waste Physical/Chemical Methods, SW-846; Third Edition (Update III)*; Method 7471A

2. USEPA *Code of Federal Requlations, 40, CH 1,PT 136;* Method 245.1; APX-B

3. USEPA *Contract Laboratory Program(CLP) for Inorganics ILM04.1; ILM05.2*

XV. DEFINITIONS

1. Refer to SOP-431 for common definitions.

Addendum for USEPA CLP ILM 05.2

1. CCV concentration must be different from ICV.

2. The same CCV shall be used throughout analysis for a sample delivery group.

3. Calibration standards must be within 5% of the standard concentration.

4. 0.2 grams of sample must be used for the sample aliquot, add enough reagent water to each sample to make a total volume of 10 mL. Proceed with method as in the water method SOP 103.0 Revision 9.

5. The ICV and CCV must be at ±20% recovery.

6. A CRA must be analyzed at the beginning and end of each batch of 20 samples. Right after the ICV/ICB and right before the final CCV/CCB. The control limit is ±30%.

7. The matrix spike must be analyzed at the concentration of 0.5 mg/Kg.

Sample Number(s):	
Batch Number(s):	
Method:	**7471A (Mercury)**

QA/QC Item	Yes	No	NA	Second Level Review
1. Were samples analyzed within USACE holding times?				
2. Was initial calibration curve QC criteria met?				
3. Was all continuing calibration criteria in control?				
4. Did any sample exceed the highest calibration standard? (If yes, were appropriate dilutions made to generate samples concentration within calibration range?)				
5. Did LCS or blank spike meet control limits?				
6. Did MS/MSD meet control limits?				
7. Was the preparation (Method) Blank below the project required detection limits?				
8. Did you return samples back to cold storage immediately after use?				
9. Was water bath temperature monitored/documented and did you apply the thermometer correction factor?				
10. Sample preparation information is correct and complete.				
11. Analytical results are correct and complete.				
12. The appropriate SOP's have been used and followed.				
14. "Raw data" including all manual integration's have been correctly interpreted.				
15. "Special" sample preparation and analytical requirements have been met.				
16. Documentation complete (e.g., all anomalies in the analytical sequence have been documented, corrective action forms are complete.				

ANALYST DATA REVIEW CHECKLIST
7471A (Mercury)

Comments on any "No" response:

Analyst: _____ Date: _____

Second-Level Review: _____ Date: _____

METALS ANALYSIS

BY INDUCTIVELY COUPLED PLASMA-ATOMIC EMISSION SPECTROMETRY (ICP-AES) TECHNIQUE

METHODS 200.7, (SW846) 6010B, (SM 19th Edition 2340B) Hardness Calculation, (USEPA CLP) ILMO 4.1 (NJDEP does not accept CLPILM 04.1 after June, 2003)

Addendum for USEPA CLPILM 05.2

SOP NUMBER: SOP-105

REVISION NUMBER: 14

APPROVED BY:

SECTION MANAGER

TECHNICAL DIRECTOR

EFFECTIVE DATE: 09/09/08

DATE OF LAST REVIEW: 09/09/08

ICP METHOD
SOP
References: SW-846, Method 6010B, December 1996
USEPA, Method 200.7, June 1991, Standard Methods 19th Edition 2340B, 1995
USEPA CLP, ILM 04.1. See Addendum for USEPA CLPILM 05.2

I. SCOPE AND APPLICATION

A. Inductively Coupled Argon Plasma (ICP) determines trace elements in solution. **We use the ICP to determine the concentration of the following metals: Ag, Al, As, B, Ba, Be, Ca, Cd, Co, Cr, Cu, Fe, K, Mg, Mn, Mo, Na, Ni, Pb, Sb, Se, Sn, Sr, Ti, Tl, V and Zn.** All matrices, including ground water, aqueous samples, TCLP, SPLP and EP extracts, industrial and organic wastes, soils, sludges, sediments, and other solid wastes, require digestion prior to analysis.

B. **Detection limits, sensitivity, and optimum ranges of the metals may be found in the ICP method file.** Use of this method is restricted to spectroscopists who are knowledgeable in the correction of spectral, chemical, and physical interferences.

II. SUMMARY OF METHOD

A. Prior to analysis, samples must be solubilized or digested using appropriate Sample Preparation Methods (e.g., Methods 3005-3050 and SOW ILM 04.1/05.2). When analyzing for dissolved constituents, acid digestion is not always necessary if the samples are filtered and acid preserved prior to analysis. If particulates form after filtration and preservation the sample must be digested prior to analysis.

NOTE: When selenium is required soluble samples must always be digested.

B. This method describes the simultaneous multi-elemental determination of elements by ICP. The method measures element-emitted light by optical spectrometry. Samples are nebulized and the resulting aerosol is transported to the plasma torch. Element-specific atomic-line emission spectra are produced by a radio-frequency inductively coupled plasma. The spectra are dispersed by a grating spectrometer, and the intensities of the lines are monitored by photomultiplier tubes. Background correction is required for trace element determination. Background must be measured adjacent to analyte lines on samples during analysis. The position selected for the background-intensity measurement, on either or both sides of the analytical line, will be determined by the complexity of the spectrum adjacent to the analyte line. The position used must be free of spectral interference and reflect the same change in background intensity as occurs at the analytic wavelength measured. Background correction is not required in cases of line

broadening where a background correction measurement would actually degrade the analytical result.

C. ICP's primary advantage is that it allows simultaneous determination of any elements in a short time. The primary disadvantage of ICP is background radiation from other elements and the plasma gases. Although all ICP instruments utilize high-resolution optics and background correction to minimize these interferences, analysis for traces of metals in the presence of a large excess of a single metal is difficult. Examples would be traces of metals in an alloy or traces of metals in a limed (high calcium) waste. ICP and Flame AA have comparable detection limits (within a factor of 4) except that ICP exhibits greater sensitivity for refractories (Al, Ba, etc.). Furnace AA, in general, will exhibit lower detection limits than either ICP or FAA.

D. It is standard procedure to use an internal standard (Yttrium) with samples to increase the stability of the instrument as recommended by the manufacturer (TJA). (When samples are suspected of containing Yttrium internal standard cannot be used.)

III. SAMPLE HANDLING AND PRESERVATION

A. Preliminary treatment of most matrices is necessary because of the complexity and variability of sample matrices. Water samples which have been prefiltered and acidified will not need acid digestion as long as the samples and standards are matrix matched and particulates do not form after the filtration and preservation take place. Solubilization and digestion procedures are presented in Sample Preparation Methods (Methods 3005A-3050A).

B. Sample digestates are stored at room temperature for at least 2 months unless a longer time is requested by the client. The samples contain an acid matrix of 3:1. Since the most concentrated acid matrix allowed for direct disposal down an acid sink is a ratio of 20:1, the samples must be diluted with 1 part water to 2 parts sample prior to pouring down the sink while the tap water is running.

C. **The appropriate SOPs should be consulted regarding sample preparation.** The following is a brief summary of the methods we use for metals preparation.

- Method 3005A prepares groundwater and surface water samples for total recoverable and dissolved metals determination by ICP. The unfiltered or filtered sample is heated with dilute HCl and HNO_3 prior to metal determination.

- Method 3010A prepares waste samples for total metal determination by ICP. The samples are vigorously digested with a mixture of nitric acid and hydrochloric acid followed by dilution with laboratory water. The method is applicable to aqueous samples, TCLP and mobility-procedure extracts.

.

- Method 3031 prepares oily waste samples for total metal determination by ICP. The samples are mixed with permanganate, H_2SO_4 , HNO_3, and HCl, then filtered. The filter is then added back to the filtrate and heated with more HNO_3 and filtered once again. If manganese is needed a manganese removal step is necessary.

- Method 3050B prepares waste samples for total metals determination by ICP. The samples are vigorously digested in nitric acid and hydrogen peroxide followed by dilution with either laboratory water or hydrochloric acid and laboratory water. The method is applicable to soils, sludges, and solid waste samples.

IV. INTERFERENCES

A. Spectral interferences are caused by background contribution from continuum or recombination phenomena, stray light from the line emission of high-concentration elements, overlap of a spectral line from another element, or unresolved overlap of molecular band spectra.

1. Background emission and stray light can usually be compensated for by subtracting the background emission determined by measurements adjacent to the analyte wavelength peak. Spectral scans of samples or single element solutions in the analyte regions may indicate when alternate wavelengths are desirable because of severe spectral interference. These scans will also show whether the most appropriate estimate of the background emission is provided by an interpolation from measurements on both sides of the wavelength peak or by measured emission on only one side. The locations selected for the measurement of background intensity will be determined by the complexity of the spectrum adjacent to the wavelength peak. The locations used for routine measurement must be free of off-line spectral interference (interelement or molecular) or adequately corrected to reflect the same change in background intensity as occurs at the wavelength peak. For multivariate methods using whole spectral regions, background scans should be included in the correction algorithm. Off-line interferences are handled by including spectra on interfering species in the algorithm.

2. To determine the appropriate location for off-line background correction, the user must scan the area on either side adjacent to the wavelength and record the apparent emission intensity from all other method analytes. This spectral information must be documented and kept on file. The location selected for background correction must be either free of off-line interelement spectral interference or a computer routine must be used for automatic correction on all determinations. If

a wavelength other than the recommended wavelength is used, the analyst must determine and document both the overlapping and nearby spectral intereference effects from all method anlytes and common elements and provide for their automatic correction on all analyses. Tests to determine spectral interference must be done using anlyte concentrations that will adequtetely describe the interfernce. Normally, 100 mg/L single element solutions are sufficient; however, for analytes such as iron that may be found at high concentration , a more appropriate test would be to use a concentration near the upper analytical range limit.

3. Spectral overlaps may be avoided by using an alternate wavelength or can be compensated by equations that correct for interelement contributions. Instruments that use equations for interelement correction require the interfering elements be analyzed at the same time as the element of interest. When operative and uncorrected, interferences will produce false positive determinations and be reported as analyte concentrations. More extensive information on interferant effects at various wavelengths and resolutions is available in reference wavelength tables and books. Users may apply interelement correction equations determined on their instruments with tested concentration ranges to compensate (off line or on line) for the effects of interfering elements. Some potential spectral interferences observed for the recommended wavelength are listed in the method in table 2. For multivariate methods using whole spectral regions, spectral interferences are handled by including spectra of the interfering elements in the algorithm. The interferences listed are only those that occur between method analytes. Only interferences of a direct overlap nature are listed. These overlaps were observed with a single instrument having a working resolution of 0.035 nm.

4. When using interelement correction equations, the interference may be expressed as analyte concentration equivalents (i.e. false analyte concentrations) arising from 100 mg/L of the interference element. For example, assume that As is to be determined (at 193.696 nm) in a sample containing approximately 10 mg/L of Al. According to Table 2 from the method, 100 mg/L of Al would yield a false signal for As equivalent to approximately 1.3 mg/L. Therefore, the presence of 10 mg/L of Al would result in a false signal for As equivalent to approximatley 0.13 mg/L. The user is cautioned that other instruments may exhibit somewhat different levels of interferences than that shown in Table 2 from the method. The interference effects must be evaluated for each individual instrument since the intensities will vary.

5. Interelement corrections will vary for the same emission line among instruments because of differences in resolution, as determined by the grating, the entrance and exit slit widths, and by the order of

dispersion. Interelement corrections will also vary depending upon the choice of background correction points. Selecting a background correction point where an intefering emission line may appear should be avoided when practical. Interelement corrections that constitute a major portion of an emission signal may not yield accurate data. Users should not forget that some samples may contain uncommon elements that could contribute spectral interferences.

6. The interference effects must be evaluated for each individual instrument whether configured as a sequential or simultaneous instrument. For each instrument, intensities will vary not only with optical resolution but also with operating conditions (such as power, viewing height and agron flow rate). When using the recommended wavelengths, the anlaylst is required to determine and document for each wavelength the effect from referenced interferences as well as any other suspected interferences that may be specific to the instrument of matrix. The analyst is encouraged to utilize a computer routine for automatic correction on all analyses.

7. If the correction routine is operating properly, the determined, apparent analyte(s) concentration from analysis of each interference solution should fall within a specific concentration range around the calibration blank. The concentration range is calculated by multiplying the concentration of the interfering element by the value of the correction factor being tested and divided by 10. If after the subtraction of the calibration blank the apparent analyte concentration falls outside of this range in either a positive or negative direction, a change in the correction factor of more than 10% should be suspected. The cause of the change should be determined and corrected and the correction factor updated. The interference check solutions should be analyzed more than once to confirm a change has occurred. Adquate rinse time between solutions and before analysis of the calibration blank will assist in the confirmation.

8. When interelement corrections are applied, their accuracy should be verified, daily, by analyzing spectral interference check solutions. If the correction factors or multivariate correction matrices tested on a daily basis are found to be within 20% criteria for 5 consecutive days, the required verification frequency of those factors in compliance may be extended to a weekly basis. Also, if the nature of the samples analyzed is such they do not contain concentrations of the interfering elements at ± one reporting limit from zero, daily verification is not required. All interelement spectral correction factors or multivariate correction matrices must be verified and updated every six months or when an instrumentation change, such as in the torch, nebulizer, injector, or plasma conditions occurs. Standard solution should e

inspected to ensure that there is no contamination that may be perceived as a spectral interference.

B. Physical interferences are effects associated with the sample nebulization and transport processes. Changes in viscosity and surface tension can cause significant inaccuracies, especially in samples containing high dissolved solids or high acid concentrations. If physical interferences are present, they must be reduced by diluting the sample or by using a peristaltic pump, by using an internal standard or by using a high solids nebulizer. Another problem that can occur with high dissolved solids is salt buildup at the tip of the nebulizer, affecting aerosol flow rate and causing instrumental drift. The problem can be controlled by wetting the argon prior to nebulization, using a tip washer, using a high solids nebulizer or diluting the sample. Also it is has been reported that better control of the argon flow rate, especially to the nebulizer, improves instrument performance: this may be accomplished with the use of mass flow controllers.

C. Memory interferences result when analytes in a previous sample contribute to the signals measured in a new sample. Memory effects can result from sample deposition on the uptake tubing to the nebulizer and from the build up of sample material in the plasma torch and spray chamber. The site where these effects occur is dependent on the elements and can be minimized by flushing the system with a rinse blank between samples. The possibility of memory interferences should be recognized within an analytical run and suitable rinse times should be used to reduce them. The rinse times necessary for a particular element must be estimated prior to analysis. This may be achieved by aspirating a standard containing elements at a concentration ten times the usual amount or at the top of the linear dynamic range. The aspiration time for this sample should be the same as a normal sample analysis period, followed by analysis of the rinse blank at designated intervals. The length of time required to reduce analyte signals to within a factor of two of the method detection limit should be noted. Until the required rinse time is established, this method suggests a rinse period of at least 60 seconds between samples and standards. If a memory interference is suspected, the sample must be reanalyzed after a rinse period of sufficient length. Alternate rinse times may be established by the analyst based upon their DQOs.

D. Users are advised that high salt concentrations can cause analyte signal suppressions and confuse interference tests. If the instrument does not display negative values, fortify the interference check solution with the elements of interest at 0.5 to 1 mg/L and measure the added standard concentration accordingly. Concentrations should be within 20% of the true spiked concentration or dilution of the samples will be necessary. In the absence of measurable analyte, overcorrection could go undetected if a negative value is reported as zero.

V. SAFETY

A. Normal accepted laboratory safety practices should be followed while performing this analysis.

1. Care should be used in handling all samples. Safety glasses must be worn in the lab at all times. The use of appropriate safety gloves and lab coats is highly recommended.
2. Research into expected sample content and concentration should be done in order to be prepared for additional safety considerations. Generally, any samples that need special consideration have applicable notes on the sample logs.
3. MSDS sheets are available for all reagents and standards that have been purchased. These are located in the bookshelves in the Quality Assurance Officers office.

VI. EQUIPMENT/APPARATUS

A. Inductively coupled argon plasma emission spectrometer: Thermo Jarrell Ash (TJA) 61E trace or equivalent.

B. Computer-controlled emission spectrometer with background correction: Thermo Jarrell Ashe (TJA) 61E trace or equivalent.

C. Radio frequency generator compliant with FCC regulations: TJA 61E trace or equivalent.

D. Argon gas supply – Liquid Argon

E. Class A volumetric flasks

F. Class A volumetric pipettes

G. Analytical balance - capable of accurate measurement to a minimum of three significant figures (.001gm): Mettler model AE100

H. Variable Eppendorf Pipettes 1000µL; 5000µL

VII. REAGENTS AND STANDARD PREPARATION

A. Notes

1. Reagent Water. All references to water in the method refer to reagent grade water unless otherwise specified. Reagent water will be interference free.

2. Reagent grade chemicals shall be used in all tests. Unless otherwise indicated, it is intended that all reagents shall conform to the specifications of the Committee on Analytical Reagents of the American Chemical Society, where such specifications are available. Other grades may be used, provided it is first ascertained that the reagent is of sufficiently high purity to permit its use without lessening the accuracy of the determination. If the purity of a reagent is in question analyze for contamination. If the concentration is less than the MDL then the reagent is acceptable.

B. REAGENTS

1. Hydrochloric acid (concentrated), HCl.
2. Nitric acid (concentrated), HNO_3.

C. STANDARDS

1. Matrix

a. All standards contain 2% HNO_3 and 5% HCl.

2. Storage

a. The standards are stored at room temperature in 500 mL Teflon bottles.

3. Traceability

a. A bound logbook record shall be maintained on all reference materials. The record shall include date of receipt, source, purity, all compositional information, storage conditions and expiration date. These materials/solutions are to be identified by a unique number in the logbook as well as on the container's label.

b. All working standards made from reference materials shall be labeled with a unique ID number with complete information on preparation date, concentration of each compound, solvent, preparer's name, expiration date and the logbook where information is recorded. Reagents shall be labeled with date received and expiration date, if applicable. All of the information described above shall also be recorded in a bound logbook. Measurements made during standards preparation (e.g., from weighing operations, volume diluted to, etc.)

shall also be recorded. There should be no container with sample, sample extract, standard solution, etc. that is not correctly labeled and properly stored.

c. The analyst must initial and date each entry made in a logbook. Each analyst must be sure to "Z" out the unused area of each logbook page.

4. Calibration standards

a. All standards have an acid matrix of 2% HNO_3 and 5% HCl and should be prepared using class A volumetric flasks, class A volumetric pipettes (or calibrated Eppendorfs).

b. STD-1 is the calibration blank: Reagent grade water **matrix matched as in (a) above. Note: when this standard is analyzed the intensities should be compared to a previous run to make sure that no contamination has occurred. Prepare this solution fresh daily.**

c. Stock QC21 solution: (100 ug/mL). Order from the manufacturer already prepared. This solution is given a unique identifier and includes the following metals - Sb, As, Be, Cd, Ca, Cr, Co, Cu, Fe, Pb, Li, Mg, Mn, Mo, Ni, Se, Sr, Tl, Ti, V, and Zn.

d. Stock Boron solution: (1000 ug/mL). Order from the manufacturer already prepared. This solution is given a unique identifier.

e. Stock Tin solution: (10000 ug/mL). Order from the manufacturer already prepared. This solution is given a unique identifier.

d. QC21 High (10 ug/mL). Dilute 50 mL of stock QC21 solution, 5 mL of stock Boron solution and 500 uL of stock Tin solution to 500 mL in a 500 mL volumetric flask, with 25 mL TRACE, Concentrated HCl and 10 mL TRACE, Concentrated HNO3. Prepare this solution fresh every three to six months.This standard is used to calibrate the following-As,B,Be,Cd,Co,Cr,Cu,Mn,Mo,Ni,Pb,Sb,Se,Sn,Ti,Tl,V,Zn.

e. Stock Silver solution: (1000 ug/mL). Order from the manufacturer already prepared. This solution is given a unique identifier.

f. Stock Aluminum solution: (10000 ug/mL). Order from the manufacturer already prepared. This solution is given a unique identifier.

g. Stock Calcium solution: (10000 ug/mL). Order from the manufacturer already prepared. This solution is given a unique identifier.

h. Stock Magnesium solution: (10000 ug/mL). Order from the manufacturer already prepared. This solution is given a unique identifier.

i. Stock Iron solution: (10000 ug/mL). Order from the manufacturer already prepared. This solution is given a unique identifier.

j. Stock Potassium solution: (10000 ug/mL). Order from the manufacturer already prepared. This solution is given a unique identifier.

k. Stock Barium solution: (10000 ug/mL). Order from the manufacturer already prepared. This solution is given a unique identifier.

l. Stock Sodium solution: (10000 ug/mL). Order from the manufacturer already prepared. This solution is given a unique identifier.

m. NAK High solution: (500000 ug/L Al,Fe), (2000 ug/L Ag), (5000 ug/L Ba), (500 mg/L Mg). Dilute 25 mL stock Al, Fe, Mg; and 1 ml stock Ag solution; and 0.25 mL of stock Ba solution to 500 mL in a 500 mL volumetric flask with 25 mL TRACE, Concentrated HCl and 10 mL TRACE, Concentrated HNO3. Solution is stable for 6 months.

n. NAK 100ppm solution: (100 mg/L Ca, Na, K.) Dilute 5.0 mL stock Ca, Na, K solutions into a 500ml flask with 25 mL TRACE, Concentrated HCl and 10 mL TRACE, Concentrated HNO3. Solution is stable for 6 months.

o. Stock Arsenic solution: (1000 ug/mL). Order from the manufacturer already prepared. This solution is given a unique identifier.

p. Stock Cobalt solution: (1000 ug/mL). Order from the manufacturer already prepared. This solution is given a unique identifier.

q. Stock Chromium solution: (1000 ug/mL). Order from the manufacturer already prepared. This solution is given a unique identifier.

r. Stock Copper solution: (1000 ug/mL). Order from the manufacturer already prepared. This solution is given a unique identifier.

s. Stock Manganese solution: (1000 ug/mL). Order from the manufacturer already prepared. This solution is given a unique identifier.

t. Stock Nickel solution: (1000 ug/mL). Order from the manufacturer already prepared. This solution is given a unique identifier.

u. Stock Lead solution: (1000 ug/mL). Order from the manufacturer already prepared. This solution is given a unique identifier.

v. Stock Selenium solution: (1000 ug/mL). Order from the manufacturer already prepared. This solution is given a unique identifier.

w. Stock Thallium solution: (1000 ug/mL). Order from the manufacturer already prepared. This solution is given a unique identifier.

x. Stock Beryllium solution: (1000 ug/mL). Order from the manufacturer already prepared. This solution is given a unique identifier.

y. Stock Cadmium solution: (1000 ug/mL). Order from the manufacturer already prepared. This solution is given a unique identifier.

z. Stock Antimony solution: (1000 ug/mL). Order from the manufacturer already prepared. This solution is given a unique identifier.

aa. Stock Molybdenum solution: (1000 ug/mL). Order from the manufacturer already prepared. This solution is given a unique identifier.

bb. Stock Strontium solution: (1000 ug/mL). Order from the manufacturer already prepared. This solution is given a unique identifier.

cc. Stock Titanium solution: (1000 ug/mL). Order from the manufacturer already prepared. This solution is given a unique identifier.

dd. Stock Vanadium solution: (1000 ug/mL). Order from the manufacturer already prepared. This solution is given a unique identifier.

ee. Stock Zinc solution: (1000 ug/mL). Order from the manufacturer already prepared. This solution is given a unique identifier.

ff. Stock Ultimate Low Standard: (200 µg/L Ag, As, Co, Cr, Cu, Mn, Ni, Pb, Se, Tl); (2500 µg/L Al); (2000 µg/L Fe); (50 µg/L Be, Cd); (10 mg/L B, Sn, Ca, Mg); (500 µg/L Sb, Zn); (1000 µg/L Mo, Sr, Ba, Ti); (200 µg/L V). Dilute 100 uL of stock Ag, As, Co, Cr, Cu, Mn, Ni, Pb, Se, V and Tl solutions; 125 µ/L of stock Al solution; 100 uL of stock

Fe solution; 5 mL of stock B solution; 500 uL of stock Sn, Ca, and Mg solutions; 250 uL of stock Sb and Zn solutions; 500 uL of stock Mo, Sr, Ba and Ti solutions; 1.0 mL of stock Cd and Be diluted to 100 mL and then use 2.5 mL of that solution diluted to 500 mL in a 500 mL volumetric flask with 25 mL TRACE, Concentrated HCl and 10 mL TRACE, Concentrated HNO3. Solution is stable for 6 months.

gg. Ultimate Low Standard: (20 µg/L Ag, As, Co, Cr, Cu, Mn, Ni, Pb, Se, Tl); (250 µg/L Al); (200 µg/L Fe); (5.0 µg/L Be, Cd); (1.0 mg/L B, Sn, Ca, Mg); (50 µg/L Sb, Zn); (100 µg/L Mn, Sr, Ba, Ti); (20 µg/L V). Dilute 10 mL of Stock Ultimate Low Standard to 100 mL in a 100 mL volumetric flask with 5 mL of TRACE, Concentrated HCl and 2 mL TRACE, Concentrated HNO3. This solution is prepared daily.

Stock Ultimate Low Standard and Ultimate Low Standard are only used when specified by client.

5. Calibration Verification standards

a. ICV Prep- 1.0 ml of QC-23, 1.0 ml of QC-7, 0.1 ml of 10,000 ppm Na, 0.09 ml of Fe at 10,000 ppm, and 0.09 ml of Al at 10,000 ppm diluted to 100 ml with 2% HNO3 and 5% HCL matrix. Mix well. CCV Prep- 1.0 ml of QC-21, 1.0 ml of QC-7, 1.0 ml of SN at 100 ppm, 0.1 ml of Na at 10,000 ppm, 0.09 ml of FE at 10,000 ppm,and 0.09 ml of Al at 10,000 ppm diluted to 100 ml with 2% HNO3 and 5% HCL matrix and mix well. This solution is prepared daily. These solutions are given a unique identifier and recorded in the standard log. ICV is prepared from a source independent from that used in the initial calibration.

b. The CRI solution is analyzed to check the accuracy of the instrument down near the contract required detection limits (CRDL). It is analyzed in conjunction with the interference check sample. The sample is prepared from a purchased solution which contains 120 µg/mL Sb, 100 µg/mL Co and V, 80 µg/mL Ni, 50 µg/mL Cu, 40 µg/mL Zn, 30 µg/mL Mn, 20 µg/mL As, Cr, Ag and Tl, 10 µg/mL Be, Cd and Se along with 6 µg/mL Pb. 500 µ/L of the solution is diluted to 500 mL. This solution is stable for 6 months.

b. The interference check solutions (ICSA and ICSAB) are prepared to contain known concentrations of interfering elements that will provide an adequate test of the IECs. A solution containing 500 ug/mL Al, Ca, Mg and 200 ug/mL Fe is diluted 10x to prepare the ICSA. The ICSAB is prepared by diluting 100x a solution containing 10 ug/mL of As and Tl; 20 ug/mL Ag; 50 ug/mL Ba, Be, Cr, Co, Cu, Mn, and V; 100 ug/mL Cd, Ni and Zn; 5 ug/mL Pb and Se; and 60 ug/L Sb. Add to this a solution containing 500 ug/mL Al, Ca, Mg and 200 ug/mL Fe diluted 10x. These solutions are prepared as needed or monthly.

d. Reporting Limit Standard- Prepared 1.0 ml of RL Stock solution A and 1.0 ml of RL Stock Solution B diluted to 100 ml with 2% HNO3 and 5% HCL matrix , mix well. Solution stable for 3 months

6. Digestion standards

a. The Laboratory control sample (LCS) is prepared from High Purity solutions CLP-CAL-1 solution A and B; CLP-CAL-2 and CLP-CAL-3. 0.50 mL of CLP-CAL-1 A and B is diluted to 500 mL with 0.125 mL of CLP-CAL-2 and CLP-CAL-3. 25 mL of HCl and 10 mL of HNO3 are added for preservation. This solution is stored in a Teflon bottle. A portion is reserved in case of a problem with digestion. When there is a problem with the analysis of the LCS the solution is checked first before action is taken to make sure that it was made properly and has not deteriorated since it was made up. This solution is given a unique identifier. The LCS is prepared from a source independent from that used in the calibration standards. This solution is prepared daily or as needed. Note: The analysis of Molybdenum is not a routine procedure but a project-specific requirement. A customized LCSW mix must be prepared to contain this target analyte.

b. The solid Laboratory Control Sample (Soil) (LCSS) is prepared by weighing up 1.0 g of teflon chips and spiking using the same spiking solutions used to spike the sample matrix. This standard is given a unique identifier i.e. LCSS(date prepared)A,B,C etc.

c. The spiking solutions are prepared as follows:

1. Stock Multi-element Spiking Solutions: High Purity <u>CLP-CAL-1</u> <u>solution A</u>: 2000 ug/mL Al and Ba; 50 ug/mL Be; 200 ug/mL Cr; 500 ug/mL Co, Mn, Ni, V and Zn; 250 ug/mL Cu; 1000 ug/mL Fe; 5000 ug/mL Ca, Mg, K and Na; <u>solution B</u>: 250 ug/mL Ag; <u>CLP-CAL-2</u>: 1000 ug/L Sb; <u>CLP-CAL-3</u>: 1000 ug/mL As, Pb, Se, Tl; 500 ug/mL Cd. Order from the manufacturer already prepared. These solutions are given a unique identifier. Add 0.050 mL (0.20 mL for soil samples) of CLP-CAL-1 solutions A and B, and 0.0125 mL (0.05 mL for soil samples) of CLP-CAL-2 and 3 to 50 mL of sample (1gram of sample for soils) for the following spike values: 2000 ug/L Al and Ba; 50 ug/L Be; 200 ug/L Cr; 500 ug/L Co, Mn, Ni, V and Zn; 250 ug/L Cu; 1000 ug/L Fe; 5.0 mg/L Ca, Mg, K and Na, 250 ug/L Ag, Sb, As, Pb, Se and Tl; 125 ug/L Cd. A blank spike should be prepared at the time the samples are spiked to check the actual spike value and accuracy.

2. TCLP Spiking Solution: Use 0.50 mL diluted to 50 mL for digestion:
2.5 mL 10000 mg/L Ba stock standard diluted to 100 mL; 2.5 mL Cr, Pb and As 1000 mg/L stock standard diluted to 100 mL; 0.50 mL Cd and Se diluted to 100 mL . Store in a Teflon bottle. A blank spike should always be prepared at the same time a sample is being spiked. This solution should produce a spike value of 2500 ug/L Ba; 250 ug/L Cr, Pb and As; and 50 ug/L of Cd and Se. Note: Since the samples are diluted 10x when digested the spike value will appear to be 10x greater when analyzed.

3. TCLP Silver Spiking Solution: Use 5.0 mL diluted to 50 mL for digestion:
0.40 mL of 1000 mg/L stock Ag solution diluted to 200 mL. Store in a Teflon bottle. A blank spike should always be prepared at the same time a sample is being spiked. This solution should produce a spike value of 200 ug/L. . Note: Since the samples are diluted 10x when digested the spike value will appear to be 10x greater when analyzed. Also this solution is not very stable and may require fresh preparation at least weekly.

VIII. CALIBRATION AND ASSOCIATED QA/QC

A. Set up the instrument with proper operating parameters. The instrument must be allowed to become thermally stable before beginning (usually requiring at least 30 minutes of operation prior to calibration).

B. Operating conditions - **The instrument settings can be found in method file.** For operation with organic solvents, use of the auxiliary argon inlet is recommended, as are solvent-resistant tubing, increased plasma (coolant) argon flow, decreased nebulizer flow, and increased RF power to obtain stable operation and precise measurements. Sensitivity, instrumental detection limit, precision, linear dynamic range, and interference effects must be established for each individual analyte line on that particular instrument. The analyst must (1) verify that the instrument configuration and operating conditions satisfy the analytical requirements and (2) maintain quality control data confirming instrument performance and analytical results.

C. Profile and calibrate the instrument according to the instrument manufacturer's recommended procedures, using the typical mixed calibration standard solutions. **(See SOP-106, *ICP Instrument Operation*)** Flush the system with 2% HNO_3 / 5% HCl between each standard or as the manufacturer recommends. (Use the average intensity of multiple exposures for both standardization and sample analysis to reduce random error.) The calibration curve consists of a blank and three standards ($r \geq 0.995$). If a three point

calibration curve is not required for the client samples being analyzed Empirical Laboratories may use a blank and one standard as referenced in USEPA - CLP protocols.

D. Before beginning the sample run, analyze the Iron and Aluminum standards at their linear range to check for IEC drifts. Analyze these standards first as QC samples with an IEC check table and action taken should be to calculate IECs. Then reanalyze the standard as a sample to check to see if the correction was made successfully. If the IEC correction overcompensated or under compensated for any one metal which is affected by it, the standard should be run again as a QC as before. Make sure to rinse thoroughly after running these linear range standards, they can cause carry over into the initial QC samples which are analyzed next. The analysis order follows as: ICV (± 10%) for 200.7 (± 5%) and ICB (< ±MDL or ±RL/CRDL for others or CLP, **for CCB, DOD QSM Ver. 3 no analytes detected >2xMDL**) first, then reanalyze the highest mixed calibration standard(s) as if it were a sample. Concentration values obtained should not deviate from the actual values by more than 5%. If they do, follow the recommendations of the instrument manufacturer to correct for this condition.

E. For CLP projects,verify the validity of the curve in the region of 2x the contract required detection limit (CRDL) before and after each batch of 20 samples in the specific order of CRI, ICSA, ICSAB, CCV and CCB(CCB criteria: < ±MDL or ±RL/CRDL for others or CLP, **for CCB, DOD QSM Ver. 3 no analytes detected >2xMDL, beginning and end of sequence and after every 10 samples**) or twice during every 8-hour work shift, whichever is more frequent. Results should be within ±20%. Supervisor must be notified if the control limit is not met. Supervisor will dictate corrective action if required. The final analytical report must document this situation. (For Internal QC)

F. Verify the interelement and background correction factors at the beginning and after each batch of 20 samples in the specific order of CRI, ICSA, ICSAB, CCV and CCB(CCB criteria: < ±MDL or ±RL/CRDL for others or CLP, **for CCB, DOD QSM Ver. 3 no analytes detected >2xMDL, beginning and end of sequence and after every 10 samples**) or twice during every 8-hour work shift, whichever is more frequent. Do this by analyzing the interference check solution A and AB. Results should be within ±20% of the true value for ICSAB. **For ICSA DOD QSM Ver 3. , absolute value of concentration for all non-spiked analytes < 2xMDL**.(ICSAB required at the end for CLP projects)

G. *When analyzing samples associated with North Carolina or with DOD QSM Ver. 3 work, a solution containing analytes at their reporting limit must be analyzed prior to sample analysis. The concentrations must be within 20% DOD(20 or 30% depending on project) of their true values to be acceptable.*

Note: Supervisor must be notified if the control limit is not met. Supervisor will dictate corrective action if required. The final analytical report must document this situation.

H. The instrument must be calibrated once every 24 hours if performing straight CLP work.

I. Note: The instrument software is set up to go to the "L" rack for calibration standards, initial IEC standards and initial and continuing calibration verifications (ICV/CCV). This QC is inserted by the analyst when setting up the autosampler table which is what the instrument software uses for a RUN LOG (The software does not allow the analyst to print the actual run log but prints an autosampler report). The autosampler report is used to load the instrument and does not include ICV and CCVs in racks 2 through 5 because all calibration QC is loaded in the "L" rack and then samples and CCB's are loaded in Racks 2 through 5. When the samples are analyzed the software inserts ICVs and CCVs from the actual run log set up by the analyst. Since each CCV location is visited twice by the autosampler during the run, two locations will be called CCV1 and two locations will be CCV2 and so on. The time and date are printed on the instrument print out with the data so that the data user can distinguish between the two CCVs.

J. Instrument Autosampler Report example:

Calibration or "L" Rack(used by instrument software to insert QC)

1) STD 1-blank
2) NAK-100ppm
3) NAK-high
4) Fe-500,000ppb
5) Mn-10,000ppb
6) QC 21-high
7) Al IEC-QC(calculate IEC)
8) FE IEC-QC(calculate IEC)
9) ICV
10) CCV1
11) CCV2
12) CCV3

Sample Sequence RACK 1

1) Al IEC-(readback)
2) Fe IEC-(readback)
3) ICB-initial
4) RL-reporting limit standard

5) NAK 100ppm-(readback)

Sample Sequence RACK 1 (cont.')

6) NAK High-(readback)
7) QC 21 High-(readback)
8) Rinse
9) CRI-0
10) ICAS-0
11) ICASB-0
12) Rinse
13) CCB 1A
14) Preparation Blank
15) Laboratory Control Sample
16) Sample 1
17) Sample 2
18) Sample 3
19) Sample 4
20) Sample 5
21) Sample 6
22) Sample 7
23) Sample 8
24) CCB 1B
25) Sample 9
26) Sample 10
27) Sample 11
28) Sample 12
29) Sample 13
30) Sample 14
31) Sample 15
32) Sample 16
33) Sample 17
34) Sample 18
35) CCB2A
36) Sample 19
37) Sample 20
38) Sample serial dilution
39) Sample matrix spike
40) Sample matrix spike duplicate
41) Sample post digestion spike
42) CRI-1
43) ICSA-1
44) ICSAB-1
45) Rinse
46) CCB 2B
47) Preparation Blank
48) Laboratory Control Sample

RACK 2

1) Sample 1
2) Sample 2
Etcetera…

Each rack holds 48 samples and there are 4 racks that are used for samples and CCBs and run QC other then ICV/CCV's.

IX. PROCEDURE

A. Once the instrument has been calibrated, begin the analysis of samples.

B. If particulates are visible in the digestate, the sample must be filtered prior to analysis. If filtration is required, a filter blank must be prepared by filtering reagent grade water which has been properly acidified. **In the event USACE samples are filtered, all USACE samples and the QC samples in that QC batch must be filtered. All USACE solid samples and their associated batch QC samples must be filtered prior to analysis.**

C. Flush the system with 2% HNO_3 / 5% HCl for at least 1 minute before the analysis of each sample.

D. Dilute and reanalyze samples that are more concentrated than the linear calibration limit or, for 200.7, $\pm$ 10% of the linear range standard. **In the case of USACE samples, the criterion changes and requires dilution and reanalysis of all samples which produce a concentration that exceeds the highest calibration standard. Sample results detected between the MDL and RL are flagged as estimated with a "B" flag.**

E. Verify calibration every 10 samples or every 2 hours, whichever is more frequent and at the end of the analytical run, using a continuing calibration verification (CCV) sample and a continuing calibration blank (CCB) sample.

- The results of the CCV are to agree within 10% for 6010 (5% for 200.7) on initial verification of the expected value, with relative standard deviation (RSD) < 5% from replicate (minimum of two integrations). If not, terminate the analysis, correct the problem, and reanalyze the previous ten samples. The analyst may continue the analytical run, and after conferring with the section manager it may be necessary to reanalyze a group of samples. The analyst must notify the section manager within 24 hours.

- The results of the calibration blank (this is not the method/preparation blank) are to agree within < ±MDL(SW-846 Method 6010B), and 3 x IDL or CRDL for CLP, for **DOD QSM Ver. 3 no analytes detected**

>2xMDL. If the calibration blank is not in control, evaluate the impact upon the previous 10 samples. Reanalysis may be required after an evaluation of the data. If the blank < 1/10 the concentration of the action level of interest, and no sample is within 10% of the action limit, samples need not be reanalyzed. One must also evaluate the reporting limit (RL) as it relates to 3X the IDL/MDL. If the RL is significantly above 3X IDL or MDL then reanalysis may not be required (Na, K, Mg and Ca are good examples of this situation).

- Total hardness is reported from HNO_3 preserved sample. The final concentration is calculated from the calcium and magnesium results as follows:

  Ca mg/L x 2.5 + Mg mg/L x 4.1 = total Hardness in mg/L as $CaCO_3$

F. Documentation of Capability (DOC) – Each analyst must perform a DOC to demonstrate proficiency with this method. Refer to SOP-413 for guidance.

X. CALCULATIONS

A. The instrument will generate data results in mg/L or µg/L (labeled appropriately). Each result represents an average of three individual readings per metal channel.

B. For aqueous samples, if a post/predigestion dilution is performed , the result must be multiplied by this factor or the dilution factor must be entered into the instrument data table in which case the instrument will generate data corrected for the dilution.

C. For solid samples, if a postdigestion dilution is performed , the result must be multiplied by this factor or the dilution factor must be entered into the instrument data table in which case the instrument will generate data corrected for the dilution. Also, the result must be converted to reporting units which are usually mg/kg.

SR (ug/g or mg/kg) = IR*DF*FED/SM

SR	=	Sample result
IR	=	Instrument result (µg/L)
DF	=	Dilution factor (post digestion)
FED	=	Final volume of digestate (L)
SM	=	Sample mass digested(g)

XI. QUALITY CONTROL

A. Daily

1. See sections VIII and IX above.

B. Quarterly

1. Linear range standards must be analyzed at a frequency no less than once every three months. The linear range standard represents the second standard required for verification that samples are actually linear to the degree claimed. The analyst is responsible for completing this task in a timely manner. The linear range standard must be within +/-5% of true value.

2. The interelement correction factors (IEC) should be verified at the time the linear range standards are analyzed.

3. IDL's if CLP work required.

C. Digestion

1. All quality control data should be maintained and available for easy reference or inspection.

2. Employ a minimum of one method blank per sample batch to determine if contamination or any memory effects are occurring. A method blank, sometimes referred to as the preparation blank is a volume of reagent water acidified with the same amounts of acids as were the standards and samples. These blanks are taken through the same digestion/preparation steps as the sample being tested. The result for the method blank should not indicate contamination greater than ± ½ RL (USACE) or ±RL/CRDL for other or CLP. If exceeded, the impact upon the data should be evaluated and the associated sample(s) should be either redigested or the data should be qualified.

3. Employ a minimum of one laboratory control sample (LCS) for aqueous samples or one teflon chip spiked sample per sample batch to verify the digestion procedure. These LCSs are taken through the same digestion/preparation steps as the sample being tested. The control limits are $\pm$15% method 200.7 - aqueous and soil samples or $\pm$20% for all other methods aqueous and soil samples. If the LCS is not in control, the impact upon the client data should be evaluated and the associated sample(s) should be redigested. Consult your supervisor for further action. Qualifying the associated data may not be permissable for CLH.

D. Sample

1. Analyze one replicate sample for every twenty samples or per analytical batch, whichever is more frequent. A replicate sample is a sample brought through the whole sample preparation and analytical process in duplicate. It is acceptable to substitute a matrix spike duplicate for the sample

replicate. Project specific requirements will take precedence in these situations. NJDEP demands that this requirement be met with a client specific duplicate rather than a spike duplicate. The control limits are 20% RPD (if both are >5x CRDL) or ± the CRDL (if either are <5X CRDL).

2. Analyze one spiked sample and spiked sample duplicate for every twenty samples or per analytical batch, whichever is more frequent. A replicate sample is a sample brought through the whole sample preparation and analytical process in duplicate. Project specific requirements will take precedence in these situations. If the analyte level in the sample is not greater than 4X the spiking level, the spike recoveries should be within ±25% of the true value (**± 20% for DOD projects**). If not, a post digestion spike should be analyzed.

3. The relative percent difference (RPD) between replicate determinations is to be calculated as referenced in the laboratory QA manual. (A control limit of ± 20% RPD (non-aqueous samples may routinely exceed this amount) shall be used for sample values greater than five times the contract required detection limit.) Supervisor must be notified if the control limit is not met. Supervisor will dictate corrective action if required. The final analytical report must document this situation.

4. *The following should be analyzed with each preparation batch containing a matrix spike.*

   - Serial dilution: If the analyte concentration is sufficiently high (minimally, a factor of 50 above the instrumental detection limit after dilution), an analysis of a 1:4 dilution (volumetric glassware must be used) should agree within ±10% of the original determination. If not, a chemical or physical interference effect should be suspected. The analyst and or section manager must note this situation on the final analytical report.

   - Post digestion spike addition: An analyte spike added to a portion of a prepared sample, or its dilution, should be recovered to within 85% to 115% of the known value and is required if the pre-digestion matrix spike (low-level only for CLH) is outside of control limits. The spike addition should produce a minimum level of 10 times and a maximum of 100 times the instrumental detection limit. If the spike is not recovered within the specified limits, a matrix effect should be suspected. The analyst and or section manager must note this situation on the final analytical report.

E. Method Detection Limit (MDL), Empirical Laboratories Reporting Limit (ERL), Contract Required Quantitation Limit (CRQL) and Analyte Wavelength:

TABLE I

Aqueous and Soil Method Detection Limits(MDL), Empirical Laboratories Reporting Limits(ERL), CLP OLM04.1 & OLM05.2 Contract Required Quantitation Limits (CRQL)

Analytes by EPA 200.7,3005A/3050A- 6010B SOW 4.1 & 5.2	AQUEOUS MDL (ug/L)	AQUEOUS ERL (ug/L)	AQUEOUS CRQL ILMO 4.1 (ug/L)	AQUEOUS CRQL ILMO 5.2 (ug/L)	SOLID/SOIL MDL (mg/Kg)	SOLID/SOIL ERL (mg/Kg)	SOLID/SOIL CRQL ILMO 4.1 (mg/Kg)	SOLID/SOIL CRQL ILMO 5.2 (mg/Kg
Silver	**1.0**	**10**	**10**	**10**	**0.20**	**2.0**	**2**	**2**
Aluminum	**50**	**200**	**200**	**200**	**10**	**40**	**40**	**40**
Arsenic	**3.0**	**10**	**10**	**15**	**0.6**	**2.0**	**2**	**3**
Barium	**5.0**	**200**	**200**	**200**	**1.0**	**40**	**40**	**40**
Beryllium	**1.0**	**5.0**	**5**	**5**	**0.20**	**1.0**	**1**	**1**
Calcium	**200**	**5000**	**5000**	**5000**	**20**	**1000**	**1000**	**1000**
Cadmium	**1.0**	**5.0**	**5**	**5**	**0.20**	**1.0**	**1**	**1**
Cobalt	**5.0**	**50**	**50**	**50**	**1.0**	**10**	**10**	**10**
Chromium	**2.0**	**10**	**10**	**10**	**0.40**	**2.0**	**2**	**2**
Copper	**4.0**	**25**	**25**	**25**	**0.40**	**5.0**	**5**	**5**
Iron	**30**	**100**	**100**	**100**	**1.0**	**20**	**20**	**20**
Potassium	**200**	**5000**	**5000**	**5000**	**40**	**1000**	**1000**	**1000**
Magnesium	**200**	**5000**	**5000**	**5000**	**40**	**1000**	**1000**	**1000**
Manganese	**1.0**	**15**	**15**	**15**	**0.20**	**3.0**	**3**	**3**
Sodium	**200**	**5000**	**5000**	**5000**	**40**	**1000**	**1000**	**1000**
Nickel	**3.0**	**40**	**40**	**40**	**1.0**	**8.0**	**8**	**8**
Lead	**1.5**	**5.0**	**3**	**10**	**0.60**	**2.0**	**0.6**	**2**
Selenium	**3.0**	**10**	**5**	**35**	**0.60**	**2.0**	**1**	**7**
Antimony	**5.0**	**60**	**60**	**60**	**1.0**	**12**	**12**	**12**
Thallium	**3.0**	**10**	**10**	**25**	**0.60**	**2.0**	**2**	**5**
Vanadium	**5.0**	**50**	**50**	**50**	**1.0**	**10**	**10**	**10**
Zinc	**5.0**	**20**	**20**	**60**	**1.0**	**4.0**	**4**	**12**

TABLE 2

METAL	WAVELENGTH
Aluminum	308.2
Antimony	206.8
Arsenic	189.0
Barium	493.4
Beryllium	313.0
Cadmium	226.5
Calcium	317.9
Chromium	267.7
Cobalt	228.6
Copper	324.7
Iron	271.4
Lead	220.3
Magnesium	279.0
Manganese	257.6
Nickel	231.6
Potassium	766.4
Selenium	196.0
Silver	328.0
Sodium	330.2
Thallium	190.8
Vanadium	292.4
Zinc	206.2

XII. CORRECTIVE ACTIONS

A. INSTRUMENT RELATED

1. ICV not within ± 10% or ± 5% for 200.7
   a. Is the problem with the solution?
      i. Reprepare or obtain new stock.
   b. Is the problem with the calibration?
      i. Recalibrate through analysis of appropriate standards and recheck ICV.

2. ICB not ±MDL or within ± 3X IDL or CRDL for CLP, **DOD QSM Ver. 3 no analytes detected >2xMDL**

a. Is the problem with the solution?
   i. Reprepare
b. Is the problem with the calibration?
   i. Recalibrate with the blank solution or the low level standard. Restart analysis with the ICV.

3. Check standards not within ± 5%
   a. Is the problem with the solution?
      i. Repour, reprepare or obtain new stock.
   b. Is the problem with the calibration?
      i. Recalibrate thru analysis of appropriate standards. Restart analysis with the ICV.

4. CRI not within ± 20% (Internal QC, only required for CLP work).
   a. Is the problem with the solution?
      i. Reprepare or obtain new stock.
   b. Is the problem with the calibration?
      i. Recalibrate thru analysis of appropriate standards. Restart analysis with the ICV.
5. ICSA metals not present are not less than the CRDL for that metal, **for ICSA DOD QSM Ver 3. , absolute value of concentration for all non-spiked analytes < 2xMDL.**
   a. Is the problem with the solution?
      i. Reprepare or obtain new stock.
   b. Is the problem with the calibration?
      i. Recalibrate thru analysis of appropriate standards. Restart analysis with the ICV.

6. ICSAB not within ± 20%
   a. Is the problem with the solution?
      i. Reprepare or obtain new stock.
   b. Is the problem with the calibration?
      i. Recalibrate thru analysis of appropriate standards. Restart analysis with the ICV.

7. CCV not within ± 10%
   a. Is the problem with the solution?
      i. Reprepare or obtain new stock.
   b. Is the problem with the calibration?
      i. If appropriate, continue the analysis. Discuss effect of the out of control situation with your supervisor. The samples will be reanalyzed or the data will be qualified. Note: CLH data must always be reanalyzed back to the last compliant CCV and not qualified.

8. CCB not ±MDL or within ± 3X IDL or CRDL for CLP, **DOD QSM Ver. 3 no analytes detected >2xMDL**

a. Is the problem with the solution?
   i. Reprepare
b. Is the problem with the calibration?
   i. Apply SW846 guidance. (See Section IX-E for additional guidance). Note: CLH data must always be reanalyzed back to the last compliant CCB and not qualified.

B. DIGESTION RELATED

1. Preparation blank not within ± ½ RL and ± RL for common contaminants USACE or RL/CRDL for other or CLP
   a. Is the problem with the instrument?
      i. Evaluate with respect to instrumental bias or reanalyze when instrument is in control.
   b. Is the problem with the digestion?
      i. If associated samples are less than 10X the level of the preparation blank but above the RL, the sample must be redigested or the data must be qualified on the final report.

2. LCS not within control limits
   a. Is the problem with the instrument?
      i. Evaluate with respect to instrumental bias or reanalyze when instrument is in control.
   b. Is the problem with the digestion?
      i. If biased low, associated samples must be redigested.
      ii. If biased high, the impact upon the data user must be evaluated. The samples will be redigested or the data will be qualified on the final report.

C. SAMPLE MATRIX RELATED

1. Replicate analysis RPD not within ±20% (if both are >5X CRDL) or ± the CRDL (if either are <5X CRDL).
   a. The associated sample data must be qualified on the final report.

2. Spike analysis recovery not within ±25%(**± 20% for DOD projects**)
   a. Is the analyte level in the sample greater than 4X the spiking level?
      i. If yes, the spike recovery is not evaluated.
      ii. If no, a post digestion spike must be analyzed and the associated sample data must be qualified on the final report.

3. When required, post digestion spike analysis recovery not within ±15%.
   a. The associated sample data must be qualified on the final report.
   b. For USACE analysis by MSA is required.

4. Serial dilution analysis percent difference not within ±10%
   a. Is the analyte concentration a factor of 50 above the instrumental detection limit after dilution?
      i. If no, the serial dilution data can not be evaluated.
      iii. If yes, a chemical or physical interference effect should be suspected. The analyst and or section manager must note this situation on the final analytical report.

XIII. WASTE DISPOSAL and POLLUTION PREVENTION

Please see Waste Disposal SOP-405 fot instruction of proper disposal of waste generated from this area.

Quantity of chemicals purchased should be based on expected usage during its shelf-life and the disposal cost of unused material. Actual reagent preparation volumes should reflect anticipated usage and reagent stability.

XIV. REFERENCES

1. *Test Methods for Evaluating Solid Waste Physical/Chemical Methods, SW-846; Third Edition (Update III)*; Method 6010B

2. USEPA *Code of Federal Requlations, 40, CH 1,PT 136;* Method 200.7; APX-B

3. USEPA *Contract Laboratory Program(CLP) for Inorganics ILM04.1; ILM05.2*

Refer to SOP-431 for common environmental laboratory definitions.

Addendum for USEPA CLPILM 05.2

1. The control limit for the ICSA is at 20% or ±CRQL whichever is greater.
2. Preparation codes are required in the digestion log See SOW Exhibit B for a listing of these codes with definitions.

3. The CRQL check standard is run at the concentration of the respective CRQLs. For a listing of CRQL for this SOW see Exhibit C. Several of the metals concentration levels have changed.
4. The spiking level for CLP ILM 05.2 is at 50 ug/L for selenium. All other spike levels remain the same as in SOW ILM 04.1.
5. The CCV shall be analyzed at a different concentration then the ICV (at or near one-half of the calibration standard concentration.
6. The post digestion spike must be analyzed at 2x the indigenous level of the sample or two times the CRQL whichever is greater.
7. A Non-prepared MDL study must be analyzed and the results of this study used for MDL reporting when sample volumes are not digested.

CHANGES TO FORMS for SOWCLPILM 05.2

1. Forms must be double-sided
2. A photocopy of the instrument's direct sequential readout shall be included.
3. Undiluted samples must be reported as well as diluted samples.
4. J flags are used in place of B flags when a sample has a concentration less the CRQL but greater then or equal to the MDL.
5. A D flag is used for samples reported from a dilution.
6. All results are reported down to the MDL not the IDL.
7. Preparation codes are used on form 13.

   The form for method of standard additions (MSA) has been removed and all subsequent QC has move up one form number in other words form 8 is now serial dilution when it used to be the MSA form,etcetera.

ANALYST DATA REVIEW CHECKLIST Sample Number(s):
Batch Number(s):
Method: 6010B (ICP)

QA/QC Item	Yes	No	NA	Second Level Review
1. Were samples analyzed within USACE holding times?				
2. Was initial calibration curve QC criteria met?				
3. Was all continuing calibration criteria in control?				
4. Did any sample exceed the highest calibration standard? (If yes, were appropriate dilutions made to generate samples concentration within calibration range?)				
5. Did LCS or blank spike meet control limits?				
6. Did MS/MSD meet control limits?				
7. Was the preparation (Method) Blank below the project required detection limits?				
8. Did you return samples back to cold storage immediately after use?				
9. Was hot plate temperature monitored/documented and did you apply the thermometer correction factor?				
10. Sample preparation information is correct and complete.				
11. Analytical results are correct and complete.				
12. The appropriate SOP's have been used and followed.				
14. "Raw data" including all manual integration's have been correctly interpreted.				
15. "Special" sample preparation and analytical requirements have been met.				
16. Documentation complete (e.g., all anomalies in the analytical sequence have been documented, corrective action forms are complete.				

Comments on any "No" response:

Analyst: _____ Date: _____

Second-Level Review: _____ Date: _____

LABORATORY SAMPLE RECEIVING, LOG IN AND STORAGE STANDARD OPERATING PROCEDURES

SOP NUMBER: **SOP-404**

REVISION NUMBER: **12**

APPROVED BY:

SECTION MANAGER

TECHNICAL DIRECTOR

EFFECTIVE DATE: **01/05/09**

DATE OF LAST REVIEW : **01/05/09**

LABORATORY SAMPLE RECEIVING, LOG IN AND STORAGE

This SOP lists in as much detail as possible our daily procedures for sample receiving, log in and storage of laboratory samples. Keep in mind that there may be project specific requirements that are more strict or different than our routine procedures. In these instances, the project specific requirements must be met and followed. Although a few project specific requirements are detailed in this SOP, i.e. USACE certification issues, not every situation can be addressed. If there is ever any uncertainty on what procedures must be followed, please see the Testing Coordinator immediately. If ever in doubt, always go with the more stringent requirements. This document will constantly be reviewed and revised as necessary.

SAMPLE ACCEPTANCE CRITERIA

A sample may be rejected for compliance purposes if it does not meet the following criteria. Analyses may only proceed after notification and approval to proceed from the client or from the laboratory manager.

1. Sample must be properly preserved and in the proper container for the requested analysis.
2. Sample integrity must be maintained. The container shall be intact without cracks, leaks, or broken seals.
3. Adequate sample volume must be received for the requested analysis, including volume for any requested QA/QC (MS/MSD).
4. The sample ID on the bottle label must match the sample ID listed on the chain of custody.
5. The sample container label and the chain of custody must be completed with indelible ink. The sample label must be intact and list all necessary information; to include: sample date, sample time, sampler, and sample ID/location. The chain of custody shall also indicate sample date and time, requested analyses, and all necessary client information.
6. Sample temperature must be less than 6°C or received on ice.
7. Sample must be within holding time for the requested analysis.

These issues are discussed in more detail below under the "Sample Receiving" section of this document.

I. Sample Receiving

A. Samples are received at the Empirical Laboratories on French Landing Drive in Nashville, TN.

1. The majority of samples are shipped in coolers by couriers such as Federal Express and UPS. All couriers are generally received in the Empirical Laboratories Sample Receiving (SR) area on the fifth floor. The laboratory is located close to the Federal Express (FedEx) distribution station, therefore we often pick up our coolers at the FedEx

location and transport them back directly to the laboratory. Some coolers and/or samples are delivered directly to the SR area by the sampler and/or client.

2. Some coolers and/or samples may be received directly by Empirical Laboratories Sample Receiving personnel. If samples are hand delivered by the client make sure that necessary paperwork is included and that you sign and date the chain of custody. If the *Empirical Laboratories* ***Chain of Custody [Attachment II***] is used the white and yellow copy of the chain of custody is retained and the pink copy must be given to the client.

B. When going through the required steps for Sample Receiving and Sample Log In, keep in mind that a ***Corrective Action Report (CAR) for Sample Receiving [Attachment III]*** must be completed to document any problems, discrepancies, project changes, etc. encountered during the process. This includes but is not limited to incorrect sample containers, improper preservatives [chemical and temperature], chain of custody discrepancies, sample descriptions, etc. A CAR may be completed just to keep a record of a situation, which is not actually "out of compliance."

1. Make sure that all information on the CAR is stated clearly and very detailed. Many times it is necessary to refer to these documents a year or more after they were completed. Document all correspondence including name, date, company and response.

2. The CAR forms must be numbered starting with No. 001 at the beginning of the year (e.g. 01-001). No two forms should have the same number. All CARs must be forwarded to the Project Manager and/or receiving manager for approval and distribution. THIS MUST BE DONE ASAP OF WHEN THE PROBLEM/SITUATION IS DISCOVERED.

C. Visually inspect all coolers for tampering, custody seals present and intact (if applicable) leakage, etc. If a cooler has been damaged beyond repair, unpack the samples and discard the cooler as to not reuse it. If you suspect a cooler may be damaged or is extremely dirty this cooler must not be reused. If coolers were sent by Federal Express, examine the Federal Express airbills for the number of packages in the shipment and make sure that all the packages (coolers, boxes etc.) in a group have been received. If there are any problems the Project Manager must be contacted immediately. If anything looks unusual, take the time to check it out and document the situation and findings.

D. Open each cooler in order to quickly inspect the contents and to locate the chain of custody. Sample Receiving personnel should wear the following personal protection equipment: gloves, safety glasses and a laboratory coat. All coolers received from projects with the **US Army Corps of Engineering (USACE) and AFCEE** projects should be opened under the hood in the sample storage room. Sign, and list the date and time received on the chain of custody. The time received must reflect the actual time the samples were received even though they may be logged into the system at a later time. Samples received on Saturday may be processed on the following Monday morning, or samples received late in the day during the week may be processed the next morning. All cooler(s) must be opened, examined for leakage, breakage etc., the temperature measured and the chain of custody signed and dated to

reflect the actual date and time which they were received. The samples must be delivered to the appropriate analytical department or put in cold storage as soon as possible.

1. Attach any shipping receipts, work orders, etc. to the chain of custody.

2. If a chain of custody or other paperwork is not sent, the client must be contacted and the samples temporarily placed on hold in cold storage. In some instances the log-in person may complete a chain of custody. The required information may be found on the sample containers or it may be necessary to call the client to get the missing information (i.e. sample ID, collection date and time, etc.). Note on the chain of custody that it was completed by laboratory personnel and record the name of the person with whom you spoke. All attempts to encourage our customers to complete a chain of custody or submit written information for samples must be made.

3. Project specific paperwork may be required. For all projects, a ***Cooler Receipt Form [Attachment IV]*** must be completed for each cooler received. Sample receiving personnel must begin completing this form as soon as a cooler is received and complete this form as samples go through the log in process.

E. The temperature of each cooler or set of samples must be measured as quickly as possible using a thermometer with 0.1°C increments. This thermometer must be calibrated against a NIST certified thermometer once a year and this information recorded in a bound notebook. The Certificate of Calibration for the NIST thermometer is kept on file at the QAO's desk. The thermometer must be tagged with the unique identification number of SR#1 and serial #; (Sample Receiving #1), the date calibrated and the correction factor. This information must also be recorded in a bound notebook. Only this thermometer can be used for recording the temperature of sample coolers upon receipt.

1. To measure the temperature, open the temperature control blank if supplied, point the IR thermometer at the liquid surface, wait 30 seconds for temperature to stabilize. Read the temperature to the nearest 0.1 °C. The corrected value temperature must also be recorded on the chain of custody. (This value will also be recorded into the LIMS at a later point.). All regulatory compliance samples received from North Carolina that do not meet the temperature requirement will be segregated and the client will be notified of the non-compliance. The samples will not be analyzed until we receive client notification to proceed with analyses.

2. If the temperature exceeds 6°C for any sample, the Project Manager or Sample Receiving personnel must contact the client immediately. There may be tighter temperature control limits for specific project requirements. The customer must make the decision to either continue with the analyses or resample. Make sure the client is aware that if the samples are analyzed, the following qualifier is normally included on the final report: "The shipping cooler temperature exceeded 6°C upon receipt to Empirical Laboratories. This may have an impact on the analytical results. The concentration may be considered as

estimated." Not all samples for the project will be flagged, just those samples received above 6°C.

Many times we are not able to get in touch with the client quickly and the best judgment on how to handle the samples must be made after discussion with the Testing Coordinator and/or Laboratory Director or Technical Director. The samples may still need to go through the log in process although it may be eventually determined that the samples will not be analyzed or the samples may temporarily be placed on hold and not logged in. Above all do not allow the samples to set out at room temperature for an extended period of time while waiting for a decision. **A CAR outlining the problem and all correspondence must be completed.**

The only exceptions to the 6°C rule are:

a. Water samples for all Metals, (except Chrome 6+ and mercury) that have been preserved with HNO_3 to a pH of ≤ 2. *Keep in mind that non-aqueous sample for Metals must be cooled.*

b. Samples for Fluoride, Chloride and Bromide.

c. Waste/Product samples for all parameters.

d. Samples generated in the Aquatic Toxicology laboratories and brought directly to Sample Receiving after they are collected. Sample receiving personnel should place these in cold storage as soon as possible.

e. Samples collected locally by Empirical Laboratories personnel or local customers that hand deliver their samples. In some instances these samples may not have had time to cool down, however, these samples should have been placed on ice in an attempt to cool them to the proper temperature. It should be noted if samples are "Received On Ice" (ROI).

f. Samples that are received on ice and it is evident that the client made a good faith attempt to properly cool the samples.

F. If several coolers are received at once, they must be inspected to determine the order in which the samples should be unpacked and logged in. The following priorities should be given:

1. Any analyses, which have a 24-72 hour holding, time. It is the log-in person's responsibility to notify the department manager or section group leader of such samples via e-mail and verbally. In addition to notifying the analyst of samples with short holding times, log-in personnel must log this information into a separate record book daily. It is the analysts' responsibility to review this information and initial each page at the end of each day.

2. Any sample which has almost exceeded its' holding time. (Especially watch for this with waters organic extractions, Solids and Sulfides, all of which have only 7 days). A list of parameters and holding times is posted in the log-in room.

    a. If a sample is received already out of holding time, the project manager must be contacted. The sample can be analyzed at the client's request, but it will be qualified on the final report as being analyzed out of holding time. The project manager must inform you of the client's need.

    b. If a sample is received with limited holding time remaining for any parameter it may be necessary to contact the project manager so that he/she can contact the client. If the sample has to be analyzed on a rush basis to meet the holding time a rush charge may apply. Also it may not be possible to analyze the sample within the holding time due to sample load, etc. A CAR must be completed.

3. Samples requiring rush turnaround.

    a. If sample(s) require 24-hour turnaround they will take first priority. Other rush requests also have high priority.

    b. The Project Manager and/or Section Manager must be contacted for approval concerning any unscheduled rush requests.

G. Unpack all samples from the cooler. If there are any known or suspected hazards this must be done under a hood. All coolers from USACE projects should be unpacked under a hood. It may be necessary to rinse off the outside of the containers in the sink and/or wipe them off with a paper towel.

1. Visually inspect them for tampering and custody seals (if applicable). Sort and inventory the samples against the chain of custody by arranging them in the same order as they are listed on the chain of custody. Normally samples are assigned log numbers in the same order as they are listed on the chain of custody but for certain projects or situations it is acceptable to arrange them in a manner which will make them easiest to log in.

2. Check for leakage as this could compromise the sample integrity. If any spillage occurred in the cooler make sure this is noted. Also list all the other samples in the cooler as cross contamination could occur. A CAR must be completed and the Project Manager and/or the customer may need to be notified in these situations. It may be necessary to resample.

H. Check the chain of custody information against the information recorded on the containers. If these do not agree, contact appropriate person (s) - Project Manager, sampler, client, etc. All problems must be documented with a CAR.

1. If major changes are made on the chain of custody received from an engineering job, then the PE should submit written confirmation of these changes or make the corrections and initial them directly on the chain of custody.

2. Any error found on the chain of custody must be marked through with one line, initialed and dated and the correction written in.

I. Note any unusual requests, methodology, hazards (known or suspected) to the Project Manager and/or Laboratory Section Manager or analysts before the samples are actually logged in. Keep notes of any problems (improper containers, preservatives, temperature, or descriptions, etc.) A CAR must be completed and the analyst or manager should be notified immediately. If ever in doubt, fill one out!

II. Sample Log In

A. After samples have been unpacked, sorted and reviewed, they are then ready to be assigned log numbers and continue through the log in process. Make sure that the parameters for the samples are clearly marked on the chain of custody. If we prepared the sample kits there should be a sample kit work order form. Contact the Project Manager if there are any questions, problems, etc.

B. Assign a work-order and sample number to each individual sample and record it on each sample container and the chain of custody.

1. All containers with the same description must have the same sample number even if they have different preservatives and require different tests. However, each different fraction (bottle type and/or preservative) should be designated with a letter (A, B, C, etc.)

2. Grab and composite samples from the same sample location must be considered as separate samples. It may be necessary to use "grab" or "composite" as part of the sample description to distinguish between the samples. Only assign different log numbers to them if the parameters are clearly marked as grab and as composite. Do not assume that VOC must be analyzed from grab samples so therefore the client must have taken a grab sample.

3. Sample numbers must begin with 001 at the beginning of each year (e.g. 0101001).

C. Check the following items and record this information on the cooler receipt form to further ensure sample integrity. A CAR must be completed if any of the following requirements are not met and it may be necessary to contact the client. We can perform the analyses in most cases and will do so with the client's approval, however the results may be qualified in some manner on the final report.

Preserving sample integrity throughout the log in procedure must be one of our section's top priorities. This includes not only ensuring that the proper chemical preservatives have been added but also that the samples are received and maintained at the proper temperature. ***When samples are unpacked they must be placed in cold storage as soon as possible even if they have not been through the entire log in procedure***. All samples for NPDES compliance monitoring from North Carolina will be stored at a temperature range of 1.0 to 4.4°C. All other NPDES samples will be stored at 4.0 ± 2.0°C. On the days we receive a large volume of samples, or are short handed, etc., we may not be able to completely log in all samples until late in the day or even the next day. Samples should not set out at room temperature if there is a delay. The samples must temporarily be placed in cold storage until you are able to complete the log in procedure. This should also be done when we take lunch breaks.

[Make sure the VOC containers are not temporarily stored in a non designated VOC only storage area.]

1. Determine if the samples were received at the proper temperature. (See section IC)

2. The sample descriptions on the bottle should match those on the chain of custody. (See section 1H)

3. Check to determine if the proper chemical preservatives were added to adjust the sample to the correct pH. All regulatory compliance samples received from North Carolina that do not meet the preservation requirement will be segregated and the client will be notified of non-compliance. The samples will not be analyzed until notification to proceed with analyses is received from the client. A list of parameters and the required chemical preservatives is posted in the log-in room. The verification of this preservation will be recorded on the Cooler Receipt Form for all projects. If Empirical Laboratories prepared and shipped out the sample containers they will have been pre-preserved unless instructed otherwise by the client. Complete traceability of the preservatives used to pre-preserve the sample containers and to preserve samples in the log-in area is required. A bound notebook must be used to trace this information and must include the following: Lot #, Type of preservative, Date Prepped, Amount and Analyst Name. This information must also be labeled on each container, re-pipetter, etc. that the preservative is stored in. Each lot of HNO3 used for Metals preservation must be tested prior to using them for preservation. These analyses are kept on file.

    a. The pH of each container (except VOA vials) which requires pH preservation must be checked. Do not open and check the pH of VOA vials in sample receiving/log-in.

    b. The pH of preserved samples is checked and confirmed using pH narrow range indicator paper. When the client request pH analysis on samples and they must be reported and measured for pH using the narrow range paper, rather then a pH meter, the accuracy of each batch of indicator paper must be calibrated to the nearest tenth versus certified pH buffer and recorded into a bound logbook in accordance with SW846 method 9041A pH Paper method.

c. When taking the pH reading, DO NOT PUT THE pH PAPER DIRECTLY INTO THE SAMPLE CONTAINER. Pour up a small aliquot and dispose of this volume after the pH is taken. For some samples (wastes) the indicator paper may not be accurate due to interferences. The observation of the appropriate color change is a strong indication that no interferences have occurred. If it appears as if there is interference, the pH must be measured using the pH meter. [See SOP ATSD-187 pH , Electrometric.]

4. The following guidelines must be followed to check pH preservation:

a. Water samples for Cyanide analyses must be preserved to a pH of >12 with NaOH upon collection. If the pH of these samples is between 11.0-12.0 upon receipt, and the samples are at the proper temperature and not over 48 hours old it will not be necessary to complete a CAR, however the sample should be adjusted to $\geq$12.0 unless project/client specific requirements are to contact the client first.

b. Water samples for Metals analyses must be preserved to a pH of $\leq$2.0 with HNO_3 upon collection. If the pH of these samples is between 2.0-.3.0 upon receipt, and the samples are not over 48 hours old it will not be necessary to complete a CAR, however the sample should be adjusted to $\leq$2.0. unless project/client specific requirements are to contact the client first.

c. Samples requiring analyses which are preserved with H_2SO_4 (i.e., Nitrogen compounds, Total Phenolics, Oil and Grease, Total Phosphorus, etc.) can be accepted up to a pH of 2.5 without a CAR, however the sample should be adjusted $\leq$2.0 unless project/client specific requirements are to contact the client first. Samples for sulfide analysis must have a pH >9.

d. If a sample is not properly preserved, log-in personnel must either do the following:

- To meet project specific requirements, including all USACE projects, the client must be notified before preserving or adding additional preservative to the sample unless otherwise instructed. If the client instructs us to add chemical preservatives to a sample, complete traceability of the preservatives used is required (See section IIC, #3). A CAR must be completed.

- For other projects it may be acceptable to preserve the sample accordingly before the sample is placed in storage. Complete traceability of the preservatives used is required (See section IIC, #3). A CAR outlining the project and the steps taken must be completed.

- All metals samples preserved upon receipt must be held 24 hours before proceeding with analysis. These samples must be entered into the Unpreserved Metals Log and a CAR generated and the client notified to see if the lab is to proceed with analysis.

e. In some instances it may not be possible to adjust the sample to the proper pH due to matrix problems which cause excessive foaming or require an unusually large amount of acid. Do not continue to add acid if a few mL's of acid does not lower the pH. Notify the Project Manager, Metals Manager and/or analyst. They will make the decision if the sample will be diluted, not analyzed, etc. A CAR must be completed in these situations. Make sure you note on the container and in the LIMS notes that the sample is not at the proper pH as well as any useful information (i.e., foaming, strong odor, etc.).

f. A CAR may not be required for samples generated in the Aquatic Toxicology Laboratories and brought directly to Sample Receiving after they are collected but before they are preserved. Log-in personnel must preserve the samples accordingly before they are placed in storage. Complete traceability of the preservatives used is required (See section IIC, #3). A CAR outlining the project and the steps taken must be completed.

5. Check to make sure samples are in proper containers and that there is adequate volume for all the parameters requested and no leakage.

6. If VOA vials are present, each vial must be inverted and checked for head space. "Pea-sized" bubbles (i.e. bubbles not exceeding 1/4 inch or 6 mm in diameter) are acceptable and should be noted, however, a CAR is not required. Large bubbles or head space is not acceptable and a CAR must be completed. If this occurs, the client must be contacted. The samples can be analyzed with their approval, however the report will be qualified and the data may be questionable. All VOA vials will be preserved with $Na_2S_2O_3$ (0.2g) when chlorine is known to be, or suspected to be present.

7. All pesticide samples to be analyzed by method 608 will be checked by the sample receiving personnel for the correct pH range of 5.0 to 9.0. The pH of the sample(s) will be communicated via E-mail to the Section Manager and appropriate analyst.

8. All chlorinated effluent samples received for Cyanide must be checked for residual chlorine. The one liter sample container should initially contain 1 to 2g/L of Ascorbic Acid. Potassium Iodide starch indicator paper will be used for detecting the presence of residual chlorine. DO NOT PUT THE TEST PAPER DIRECTLY INTO THE SAMPLE CONTAINER. Pour up a small aliquot, neutralize, test and dispose of this volume after the sample is checked. If the test paper turns blue, the sample must be treated for residual chlorine. Add Ascorbic Acid, approximately 0.6g at a time and recheck the sample until there is no residual chlorine present. If the sample required this treatment this information must be included in the LIMS notes. This must be done by log-in personnel before leaving the receiving area. It may be necessary to notify the Inorganic Manager and/or analyst.

9. Be aware of holding time requirements. (See section 1D)

D. Once sample containers have been numbered, they must be checked by another laboratory individual to ensure that the log number on the container matches the log number and sample ID on the Chain of Custody. A ***Sample Receiving Custody and Disposal Form [Attachment VII]*** must be completed each day. Samples should not leave the log-in area until this has been completed. *[see IIC; it may be necessary to temporarily store samples in cold storage until the samples can be second checked, the amount of time that the samples are at room temperature must be minimized as much as possible.]* The original is to remain in Sample Receiving until the samples are disposed of. Once the document is complete, the original will be kept on file. The following information must be logged onto this form:

1. Client and Log #s
2. Date/Time Unpacked
3. Logged In/Numbered By (Initials)
4. 2nd Checked By (Initials)
5. Date/Time Placed in Cold Storage
6. Storage Area (Walk In, VOC Cooler, Quarantined Soils, Quarantined-VOC, Other)
7. Disposed of By/Date
8. Method of Disposal

E. Notify the proper analyst if samples have been logged in for analyses which have a 24-48 hour holding time or if a 1-2 day turnaround has been requested. The log number and description on sample (s) must be second checked before it is released to the analyst. (The analyst can second check the sample, but must initial the custody form.)

III. Sample Storage

A. After samples have been correctly logged in they are then transferred to one of the following cold storage areas and arranged in numerical order by the assigned log in/LIMS sample number. ***Note that aqueous VOC samples must be segregated from all other samples.***

1. The Blue Air refrigerator in Sample Storage Room: All aqueous VOC's must be stored in this refrigerator. Storage blanks consisting of organic free water from the laboratory may be required for specific projects. These will be analyzed for VOCs only. ***Storage blanks are required for all DOD projects.***
2. Walk In Refrigerator in Sample Storage Room: All aqueous samples for all analyses must be stored in this refrigerator.

3. Soil Walk-In Refrigerator in back BC Laboratory: All quarantined and non-quarantined soil samples for all analyses must be stored in this refrigerator.

B. Quarantined soils are those quarantined by the US Department of Agriculture. These soil samples must be segregated from other soil samples during storage. A separate disposal log must be maintained for these soils including the location, date and quantity of the soil received and processed. Soil residues from quarantined samples must be treated according to regulations after testing (see Sample Disposal SOP). Quarantined soils are defined as:

1. Soil taken from much of the southeastern US and parts of New York and Maryland at a depth of three feet or less. *Soils from three feet or more are not regulated provided they are stored separately.* A map of the regulated areas in the United States entitled ***Soil Movement Regulations [Attachment VIII]*** is posted in the log-in room.

2. All soils taken from foreign sources, US. territories and Hawaii .

NOTE: All soils are treated as quarantined soils and are disposed of in accordance with USDA regulations. Above for information purposes only.

C. All samples must be stored in one of the three refrigerators detailed above with the following exceptions:

1. Matrices that may be adversely affected by the cold temperature. (e.g. surfactant samples, multi-phase samples)

2. Highly contaminated waste or product type samples that could jeopardize the integrity of other samples in the walk in cooler. Often these can be stored at room temperature. If these require refrigeration see the Project Manager for other options.

D. The temperature of each sample refrigerator must be monitored and recorded each day by Wet Chem personnel by the following method. A Mercury thermometer or digital min/max thermometer with 1° increments must be used. Each thermometer must be calibrated against a NIST certified thermometer once a year**(digital thermometers quarterly)** and this information recorded in a bound notebook. The Certificate of Calibration for the NIST thermometer is kept on file at the QAO's desk. The thermometers must be tagged with a unique identification, the date calibrated and the correction factor.

The tolerance range for all refrigerators is 1 to 6°C. This range and the range using the corrected reading must be posted on the outside of each cooler. If the temperature exceeds this range, corrective action measures must be put in place immediately. A CAR must be completed specifically noting the date and time the problem was discovered. The Project Manager, Laboratory Director and Technical Director will be notified in order to assess the situation. It may be necessary to put a service call in to the refrigeration repair service.

E. All personnel removing samples from any refrigerator must sign them in and out. This is done by completing the ***Sample Custody Form [Attachment IX]*** which is attached to the door of each refrigerator. These completed forms are kept on file [see section III, #4F]

F. The water walk in refrigerator in the sample room is the largest refrigerator and stores a large majority of the samples. A back up compressor is hooked into the system and scheduled to automatically come on if the main compressor fails. There is a digital min/max thermometer, which monitors the temperature 7 days a week. This thermometer will be calibrated quarterly against the NIST thermometer.

G. As stated above the temperatures for all refrigerators that samples are stored are checked each day Monday-Friday and monitored seven days a week with min/max thermometers. Pay close attention to these readings and watch for signs of possible problems.

H. A temperature maintenance record book is kept for each refrigerator.

I. Samples must be held for a minimum of 30 days after the final report unless specified otherwise. For USACE projects, samples must be held for a minimum of 60 days after the final report unless otherwise specified. See SOP ATSD 405 entitled Analytical Laboratory Waste Disposal SOP for guidance on disposal of samples.

IV. Laboratory Information Management System (LIMS)

A. Log the sample information into the LIMS for each sample. Every attempt should be made to get every sample logged into the LIMS by the end of the day. All information entered should be clearly stated and recorded on the COC provided. After opening the main menu of the LIMS, select the 'Work Orders' tab from the 'Sample Control' drop down menu. Now click on the 'Add' button to create a new Work Order. You will see the following:

1. ***Client*:**

   Select the client I.D. by clicking on the pull-down and choosing from the client list. This list is in alphabetical order. If the desired client is not on the list, a new client must be created by the project manager or I.T. director.

2. ***Projects*:**

   Click on 'Projects' and choose the project I.D. The projects will be client specific. After the project is chosen the "project information" areas should fill in. The 'Project Name,' 'Project Number,' 'TAT,' 'Client Project Manager,' 'Lab Project Manager,' and 'Comments' information should also appear. If there are no applicable project choices, a project must be created by the project manager or I.T. director. There are two types of projects:

a. Internal -- Empirical Laboratories projects;

b. External -- direct laboratory clients.

3. ***Comments:***

This area is to be used to note any information from the project manager for all work orders of this project. It can also be used to list any work order specific notes; this includes but is not limited to information concerning rush turnaround, deliverables or other QC requirements, analyte concentrations, safety issues, quarantined soils, CAR #s, preservation or matrix problems, etc.

4. ***Received By:***

Enter the name of the person who received the samples.

5. ***Logged In By****:*

Enter the name of the person who logged in the samples.

6. ***Received:***

Enter the date and time received separated by a space and using military time.
Example: *08/02/2008 08:30*

7. Project/Package Date Due:

After the date and time received have been entered, the date due for both of these fields will be calculated. If this information is not correct or needs to be amended later, check with the project manager before doing so.

8. ***Shipping Containers:***

Click on the 'Coolers' button and enter the temperature and condition upon receipt. If more than one cooler was received, each cooler must be assigned a different name. For example, if these came in by dedicated courier, enter the last four numbers of the Tracking Number as the name. After all of a cooler's information has been entered, click the 'Save' button. If more than one cooler was received, click the 'Add' button and repeat the process above, then click 'Done' after all the coolers' info has been saved.

9. ***COC Number:***

If an identifiable COC number is listed, record that ID here.

10. ***Shipped By**:*

    Enter the courier used to deliver the samples. If the samples were picked up by a lab employee or dropped of by the client/representative, enter 'Hand-Delivered.'

After these items have been completed, click 'Save,' then the 'Samples' button to continue. To begin entering information for a sample, click the 'Add' button on the bottom of the Samples screen.

11. ***Sample Name:***

    a. Only abbreviate if description is too long for the spaces allotted in the LIMS. This information should come directly from the chain of custody. The sample ID entered into the LIMS will be the sample ID on the final report.

    b. If no sample ID is provided, or is indistinguishable from other samples listed, contact the project manager to ascertain distinction in the samples. Include date as part of the description if this is the only way to differentiate the samples.

    c. When logging in trip blanks that do not have an ID assigned by the client, list them as "Trip Blank # _____". This information should be on the containers. A log book must be kept in the sample kit room which lists all trip blanks and the date they were filled. This will ensure consistency with the descriptions for trip blanks. Make sure you record the trip blank on the chain of custody if it is not listed.

12. ***Collection Date:***

    Enter the date and time the sample was collected. You must use military time and separate by a space. Often the time collected is not given. Although this is a sampling requirement, this information may not be crucial unless a parameter with a short holding time or a data deliverables package is required. All attempts should be made to get all our clients to supply this information.

13. ***Lab/Report Matrix:***

    Click on pull down and select matrix. Many times it is difficult to discern the matrix if it is not specified on the COC, and log-in personnel must use their best judgment with regard to analytes/methods requested. Keep in mind that the detection limits and units on the LIMS reports are linked to the matrix. In some cases it may be necessary to ask the Section Managers about the matrix selection.

14. ***Sample Type:***

This is used to differentiate between special types of samples (i.e. Field Duplicates, Equipment Blanks, Trip Blanks, etc.). If there is no definite way to determine that a sample should be classified as something else, then "SAMP-Client Sample" will be selected as the sample type. Do not list a sample as anything other than a Client Sample unless noted on the COC of are instructed by the client to do so.

15. ***Container:***

Click on the drop down list and select the appropriate bottle type. If multiple bottles are received for the same sample, then move down to the next line and select all other containers as required. Repeat this process until all containers for the sample are listed. As each container is entered, an individual number is assigned to it by the LIMS system. This number is also listed on the container labels that are printed from the LIMS, and is placed on the corresponding bottle for container tracking purposes.

16. ***Fraction:***

When more than one container is sent with the same preservation/analysis (i.e. Volatiles & Extractables), the sample containers can be grouped together using a fraction code. This is simply an alphabetical notation added to each container to allow analysts to verify the preservative and proper sample volume to use when performing analysis. **This should be in no way used to record the sample volume used during analysis or reporting**, as these codes are entered by log-in personnel on an as needed basis, and do not provide an individual container designation by which to track any given container.

17. ***pH*** (Container Preservative)***:***

Use this to document the pH check information taken during sample unpacking. If no preservative was used, then nothing is required in this field.

18. ***Comments:***

Enter any information that is applicable at the sample level.

19. ***Field Analysis:***

Click on field analysis tab and enter field information when provided.

20. ***Work Analyses:***

Select all parameters requested for the sample from this list.

a. If the required test code is not listed, and the sample matrix is not a contributing factor, click the Work Analyses tab to open the All Analyses list. When selecting from this expanded list, be careful to select the proper method as all methods available for the current matrix will be selectable.

b. If any analyses are selected from the All Analyses list, the Project Manager in charge should be notified so that the correctness of methods and pricing can be checked and updated as needed.

c. All preparation codes for analytes are entered and stored by the system independently of the test codes selected, except in the cases of Dry Weight analysis, and TCLP/SPLP preparation (tumbling). In the case of the TCLP/SPLP prep codes, these are entered alongside the other required analyses automatically by the LIMS when a TCLP/SPLP analyte is selected. As for Dry Weight, it is required for all solids testing except in the cases of TCLP/SPLP analysis, Explosives only analysis, and/or any pure product/non-soil based sample when specified by the client.

21. ***Analyses Comments:***

These comments should be used for any notes that only apply to that particular test code.

22. ***RTAT:***

If the Rush Turn-Around Time for this sample is known at the time of log-in, this information should be updated here.

23. ***Save:***

Once all applicable information is entered for a sample, click the save button. At this time the LIMS applies the Laboratory Sample ID to the sample. This is a four part ID code composed of the following:

a. A 2-digit numeral of the year. Example (**08**11248-06)

b. A 2-digit numeral of the month. Example (08**11**248-06)

c. A 3-digit numeral of the work order number. This number reset to 001 at the beginning of each month. Example (0811**248**-06)

d. A 2-digit numeral of the sample number separated by a dash. Example (0811248**-06**). This number is different for each sample in a work order, and a single work order cannot contain more than 99 samples. If more sample numbers are needed, a new work order number will have to be assigned to the applicable set of sample.

24. ***Add/Edit/Copy:***

    Use these selections to add more samples to the work order, or to change existing information prior to label printing.

Once all the tests have been selected and all samples have been added in the work order, a work order summary and all container labels are printed. Labels are checked for accuracy against the containers while being labeled. At this point log-in of this group of samples is complete.

B. After log-in of a work order is complete, the COC can then be scanned into the system, attached to the work order on the Work Order screen, and the work order can be updated to Available status so as to be seen by the analysts.

V. Daily Follow Up for Sample Receiving/Log In

A. Wipe out the inside of coolers and return all Empirical Laboratories coolers to the sample kit room. Discard any coolers that are cracked, broken or filthy.

B. Complete the short holding times log book as required. This must be done as early in the day as possible.

C. If any samples were received for RUSH turnaround, then a ***RUSH SHEET [Attachment XII]*** must be completed and distributed to all laboratory personnel via e-mail. If ever in doubt of which analysts should be notified, pass them out to everyone. Always give copies to the Laboratory Director, Administrative Assistant and Section Managers. It may be necessary to send out two RUSH sheets per day (one around mid-day and the other at the end of the day).

D. Complete any required CARs.

E. At the end of the day organize all paperwork received and generated for the day. The following should be given to the Project Manager (section supervisor):

    1. The original chains of custody and yellow original or copy of each. The CRF will accompany the CoC for the project.

    2. Any information (letters, regulatory limits, etc.) from a client which was received with any samples.

    3. All CARs.

4. LIMS sample receiving logs.

5. Copies of any RUSH sheets which have been distributed

6. Sample Receiving Custody and Disposal Form.

7. Cooler receipt form.

G. All the above information from the day will be reviewed as soon as possible.

1. All LIMS logs must be 2nd checked by a different person than the person entering the information into the LIMS. Each set of logs must be initialed dated by the person 2nd checking. These will be kept on file at the Project Manager desk.

2. If any corrections or changes are required, all laboratory personnel will be notified by distributing a ***Sample Log Change Form [Attachment XIII]*** through email distribution. A ***Sample Log Change Form*** by the project manager will also be sent out if a client adds or deletes any parameters, changes sample IDs, etc.

H. The Testing Coordinator will distribute the following after they have been through the 2nd QA check:

1. Copies of the LIMS receiving reports to necessary laboratory personnel.

2. Original (white copy) chains of custody are given to the Project Manager. These will be sent with the final report to the client.

3. Finalized/approved CARs must be sent to the:

   a. Organic Manager

   b. Inorganic Manager

   c. Laboratory Manager

   d. Laboratory Director {optional}

   e. Quality Assurance Officer

   f. Administrative Assistant

   g. Client {optional}

4. Copies of any project/sample specific information to the Section Manager and analysts.

I. Information will be filed as follows:

1. Chains of custody:

a. Original (white copy) is returned to the customer with the final report along with the CRF.

b. Yellow copy originals or photo copies will be filed by client and kept in the Sample Receiving Room.

c. Photo copies will be kept in a notebook in numerical order in the Sample Receiving Room.

d. Pink copies should be retained by the sampler.

2. CARs

a. CARs can be found at V:\LAB\log-in\login(year)\logcar(year).

3. Sample Change Forms and RUSH Sheets

a. Sample Change Forms are distributed by email.

b. RUSH Sheets are found at V:\LAB\login\Rushsheets

4. At the end of each year, files for that year are boxed and archived. Make sure files are labeled properly and place them in banker's boxes. Complete a storage box file form with as much detailed information as possible. The Laboratory Administrative Assistant will label and number the boxes and incorporate the storage boxes into the laboratory file archive system. Boxes containing files from Sample Receiving are kept on site for 1-2 years and then may be moved to off site storage upon release from the Project Manager.

VI. Miscellaneous

A. All projects which require deliverables or other QC requirements should be listed in the notes section of the LIMS.

B. If samples are received from a new client or a new job number that is not in the LIMS, a new client code must be set up. This information should be on the chain of custody or it may be necessary to contact the customer if the information is incomplete.

C. Samples from the Aquatic Toxicity Laboratory (ATL) are logged into the LIMS for billing and long-term tracking purposes. The receiving information and proper assignment of test's are reviewed by the ATL Manager. The samples are then logged in by ATL personnel.

D. A flow chart outlining sample receiving and the flow of data, reporting and invoicing is attached as ***Attachment XIV.***

E. A ***Telephone Conversation Log [Attachment XV]*** may be required to document information and may be attached to or used as a CAR.

F. All log books used in the Sample Receiving and Sample Storage Areas are numbered. The following log books are presently maintained. All log books must be "Z"ed out. The Testing Coordinator will review the log books each week to check for completeness.

Log Book ID	**Log Book Description**
SRLB #3	pH Paper Calibration
SRLB #4	Tracking of VOC Trip Blanks, Organic Free Water and Chemical Preservation

Attachments to SOP 404

II	Chain of Custody Record
III	Corrective Action Report for Sample Receiving/Log In
IV	Cooler Receipt Form
V	List of Short Holding Time (Immediate-72 hrs.) Parameters
VII	Sample Receiving Custody and Disposal Form
VIII	Map of Quarantined Soil Areas in the US.
IX	Laboratory Sample Custody Form for Walk In Refrigerator
X	Container Codes for the LIMS
XI	Routine NPDES Clients
XII	RUSH Sheet
XIII	Sample Log Change Form (Green Sheet)
XIV	Flow Chart, Laboratory Sample Tracking System

[Attachments I and VI were removed during the editing process and not added to the SOP.]

ANALYTICAL LABORATORY WASTE DISPOSAL

SOP NUMBER: SOP-405

REVISION NUMBER: 4

APPROVED BY:

TECHNICAL DIRECTOR

QUALITY ASSURANCE OFFICER

EFFECTIVE DATE: 09/26/03

DATE OF LAST REVIEW: 04/23/08

Analytical Laboratory Waste Disposal
Standard Operating Procedure

I. SCOPE AND APPLICATION:

Empirical Laboratories, LLC laboratory waste includes excess client sample waste and waste that are generated while performing an array of analytical services, some of which are hazardous. These wastes must be disposed of in a manner that is safe, cost efficient and in accordance with hazardous waste regulations.

A. Wastes can be broken down into the following categories:

1. Unused portions of actual samples received from outside clients.

   a. Unused aliquots of completed water samples.

   b. Unused aliquots of completed non-aqueous samples.

2. Soils from quarantined areas

3. All other soils, sediments, building debris, wipes etc.

4. Hazardous waste generated within the laboratory as part of numerous analytical procedures.

II. SUMMARY OF PROCEDURES:

A. There are four options for disposing of unused sample portions:

1. Return completed samples and any generated waste from these samples to the client.

2. Throw the sample away after confirming that it is non-hazardous.

3. Disposal through a waste vendor in either a sealed drum or lab pack. This is normally done twice a year.

4. Treat the sample to make it non-hazardous and dispose of it as such. (Aqueous pH neutralization only.)

B. There are two options for disposing of laboratory generated waste:

1. Disposal through a waste vendor in either a sealed drum or lab pack. This is normally done twice a year. The waste must be stored properly until the waste is transported off site.

For example: Solvent waste must be stored in the vented flammable cabinet.

2. Treat the waste to make it non-hazardous and dispose of it as such. (Aqueous pH neutralization only.)

III. EQUIPMENT/APPARATUS:

A. Proper safety equipment in good working condition. This includes gloves, lab coat and safety glasses/goggles (voluntary use of cartridge respirator allowed see area manager or QAO).

B. USDOT approved drums for storing and shipping hazardous waste.

C. Fume hood vented outside the building.

D. Flammable storage cabinet which is vented to the outside

IV. PROCEDURE

Waste disposal is done under the management and coordination of the Sample Receiving Manager, Section Managers and the Health and Safety Officer.

A. Disposal of completed aqueous samples:

Completed samples are kept in cold storage for approximately three weeks after the final report has been mailed. Engineering support projects involving CLP work, litigation cases etc. may be saved for longer than three weeks at the request of the project manager.

No samples should be disposed of without approval from the responsible area manager or analyst. **At this point the area manager and/or analyst will communicate information about samples deemed as hazardous**.

1. The majority of the water samples (ground, surface and drinking) are non-hazardous and are disposed of by pouring them down the sink.

a. This must be done under the hooded area located near the walk in cooler next to the extraction lab. Make sure that the sash is closed far enough to produce sufficient ventilation. The tap water should be turned on to supply copious wash for sample disposal.

b. Proper safety equipment **must** be used including safety glasses (face shield if necessary), lab coat and gloves.

c. **Be alert to potential problems: for example, separate Cyanide waste from acid waste. Neutralize acid waste that will be poured down the acid drain and don't mix waste/samples thought to contain Cyanide with samples that are acidified. Also, look for things such as phase separation, odd color, odor etc. Check with the area manager or Health and Safety Officer before disposing of any questionable samples.**

d. Tap water must be running during the time samples are poured out and for approximately 10 minutes after so sufficient flushing and dilution takes place.

e. All containers must be rinsed out, all identifying markings defaced or removed, and thrown into the trash.

f. All samples disposed of in this manner must be documented in the bound disposal log.

2. If water samples are hazardous (known or suspected), one of the following steps must be taken.

a. Samples may be returned to the client. If you plan to ship the unused portion back to the client check with shipping and receiving to make sure that the material can be shipped in accordance with USDOT regulations. **If the samples are not returned to the client they must be stored properly until picked up by a waste vender.**

b. Treat the sample to make it non-hazardous. One example of this is if the sample is highly corrosive, the pH may be adjusted.

c. Store the sample properly until either a sealed drum or lab pack is sent out.

d. All samples disposed of in this manner must be documented in the bound disposal log.

B. Disposal of completed non-aqueous samples:

The majority of non-aqueous samples are soils or sediments, although there may also be building debris, wipes, oils**,** and occasionally product type samples.

1. If samples are non-hazardous they must have all identifying markings defaced or removed, and thrown into the trash. On specific projects we may also opt to return the unused portions to the client even if they are non-hazardous.

2. If non-aqueous samples are hazardous (known or suspected), one of the following steps must be taken.

a. Samples may be returned to the client. If you plan to ship the unused portion back to the client check with shipping and receiving to make sure that the material can be shipped in accordance with USDOT regulations**. If the samples are not returned to the client they must be stored properly until picked up by a waste vender.**

b. Store the sample properly until a lab pack is sent out.

3. Soil samples taken at a depth of three feet or less from areas, which have been quarantined by the US Department of Agriculture (USDA), must first be treated at the laboratory to prevent the spread of any plant pests. The USDA has detailed proper treatment procedures of which we use the following:

a. The sample is heated to 180°C(356°F)in a vented oven for one hour.
b. After the heating the samples are placed close to a hood to cool and are marked as being ready for disposal.

4. Once the samples have undergone treatment they can then be disposed of by one of the procedures for non-aqueous samples**. All samples disposed of in this**

manner must be documented in the bound disposal logbook with the following information:

a. Client
b. Sample #s
c. Date(s) treated
d. Treatment method used

C. Disposal of laboratory generated waste:

Generated waste is stored in satellite areas until a waste pick up occurs. These satellite areas must be maintained properly.

1. Waste handling and disposal within each laboratory section:

Each laboratory analyst and section manager is responsible to assure that **handling** operations within their area are being followed according to the laboratory requirement.

a. General Chemistry/Inorganic

Each analyst performining specific laboratory tests that generates waste is responsible to handle and dispose of the waste in a safe manner and under the guidelines listed below. If you have any questions left unanswered regarding waste disposal within your specific area contact the inorganic manager or the safety officer.

- Concentrated acid waste, **(>2% by volume) and** dilute mercury waste (mercury, chemical oxygen demand, total kjeldahl nitrogen and chloride analyses waste) are poured into the Acid Satellite Waste drum in the general chemistry laboratory. **Document the type and amount of waste in the acid waste logbook, then initial and date the entry**.
- Dilute acid waste **(<2% by volume or less)** are neutralized and poured down an acid drain with copious amounts of tap water.
- **All other non-hazardous sample waste, reagents and standards are poured down the drain with copious amounts of tap water.**

b. Metals

Each analyst performining specific laboratory tests that generates waste is responsible to handle and dispose of the waste in a safe manner and under the guidelines listed below. If you have any questions left unanswered regarding waste disposal within your specific area contact the inorganic manager or the safety officer.

- Concentrated acid waste, aqueous sample waste digestates and old unused calibration standards **(>2% by volume)** are poured into the Acid Satellite Waste drum in the general chemistry laboratory.
- Non-aqueous sample digestate wastes are decanted off the soil/solid samples into the Acid Satellite Waste drum in the General Chemistry Laboratory. **Rinse the soil/solid with tap water several times and discard the first rinsate into the Acid Satellite Waste drum and the sequential rinsates decant down an acid drain with copious amounts of tap-water.**
- **Throw the soil/solids in the trash once the acid has been rinsed free**.
- **Cr6 digestates as with all concentrated metal/acid waste are poured into the Acid Satellite Waste drum.**

c. Organic Extraction Laboratory Area

Each analyst performining specific laboratory tests that generates waste is responsible to handle and dispose of the waste in a safe manner and under the guidelines listed below. If you have any questions left unanswered regarding waste disposal within your specific area contact the organic manager or the safety officer.

- Concentrated acid waste is discarded into the Acid Satellite Waste drum in the General Chemistry Laboratory.
- Non-chlorinated solvent waste (Acetone, Ether, Hexane, Methanol ….etc…) pour into the Non-Chlorinated Waste labeled bottle located in the hood in the Organic Extraction Laboratory.
- Chlorinated solvent waste (Methylene Chloride, Chloroform, chlorinated standard and spike waste) pour into the Chlorinated Waste labeled bottle located in the hood in the Organic Extraction Laboratory.

****Note: Laboratory generated solvent waste is transferred to the appropriate Satellite Solvent Waste Drum (chlorinated or non-chlorinated) weekly or as deemed necessary. Disposal of solvent waste is done under the direction of the organic laboratory manager. These drums are located in the chemical reagent storage room and only authorized laboratory staff are allowed to add waste solvent to these drums. The date of addition to the**

drum , type and quantity of solvent is entered into the '*Organic Solvent Waste Logbook*' located on the shelf next to the drums.

- **Aqueous sample waste from extracted samples (once the extraction solvent has been removed) is poured down the drain and flush with copious amount of tap water.**
- Non-aqueous sample waste and sodium sulfate waste is dumped into a waste container under an extraction laboratory hood and left overnight or until the solvent is evaporated and then the waste is discarded into the trash.

d. Gas Chromatography (GC)/High Performance Liquid Chromatography (HPLC) Laboratory

- Autosampler vials are discarded into the appropriately labeled box located under the table in the GC/HPLC Laboratory.

PCB Box – all samples/standards
Pesticide Box – all samples/standards
Herbicide Box – all samples/standards
8330 Box – all samples/standards
Methylene Chloride Box- all samples/standards that contain methylene chloride (Diesel Range Organics, DRO)

- Sample and spike extract vials are separated according to the contents in the vial.

Acid cleaned extracts are combined into a separatory funnel and the acid layer separated from the solvent. The acid portion is discarded into the Acid Satellite Waste drum in the general chemistry laboratory. The solvent waste is discarded into the appropriate solvent waste bottle (chlorinated/non-chlorinated waste) located in the hood in the organic extraction laboratory.

After the mercury has been recovered from the mercury cleaned samples, the extracts are discarded into the proper waste solvent bottle (chlorinated/non-chlorinated waste) in the hood in the organic extraction laboratory. The mercury waste is consolidated and discarded into the mercury waste container located in the vented hood in the chemical storage room. **Mercury used for removing sulfur from samples has been discontinued in our laboratory**.

Unused stock and working standards are discarded into the chlorinated solvent waste bottle located in the organic extraction laboratory. The empty vials are rinsed

several (3) times with solvent and the solvent rinsate poured into the solvent waste and the vials with labels removed are discarded into the glassware waste container.

e. Gas Chromatography/Mass Spectrometry

- Volatile sample, standard and reagent waste

Waste from the instrument - Aqueous sample waste is collected in waste bottles via waste lines from the instrument. The bottles are emptied into buckets and poured down the drain(pH is < 2% by volume). A small amount of methanol used to clean glassware is also dumped into the bucket and poured down the drain. While disposing of sample waste always run the cold tap water 10-15 minutes. Non-aqueous waste from sample analyses is retained and dispose of in the samey as the unused sample. Unused sample is held for sample disposal by the sample receiving area, see A and B listed above.

Standards - **Unused stock and working standards** are discarded into the chlorinated solvent waste bottle located in the organic extraction laboratory. The empty vials are rinsed several (3) times with solvent and the solvent rinsate poured into the solvent waste and the vials with labels removed are discarded into the glassware waste container.

In conjunction with section managers, the sample receiving area disposes of solid sample waste and unused aqueous and solid samples, see procedures A and B listed above.

- Semivolatile sample and standard waste disposal

Methylene chloride waste solvent and standard waste in vials are poured into the chlorinated waste bottle in the hood in the organic extraction laboratory. The empty vials are rinsed with solvent and the solvent poured into the waste solvent bottle. The vials with labels removed are discarded into the glassware waste disposal container.

Auto sampler vials are collected in buckets and stored under the hood in the organic extraction laboratory. **Periodically the vials are consolidated in lab packs for disposal by a licensed waste disposal company**.

f. Bioassay Laboratory

- Aqueous sample waste and a small amount of methanol are poured down the drain with copious amounts of tap water. Larger amounts of methanol used for glassware cleaning are collected in beakers and evaporated at room temperature.

- Hazardous or product samples are returned to the client.

D. Consolidation of satellite waste for contractor disposal:

In conjunction with the Safety Officer, the sample revieving supervisor is responsible to coordinate waste disposal operations with outside waste disposal contractors.

1. Solvent waste from the areas discussed above is periodically consolidated into two drums located in the Chemical Storage room (c. *Organic Extraction Laboratory Area*, *** Note**). A drum designated either chlorinated or non-chlorinated solvent waste is available to receive the appropriate solvent waste. When the drums become full (fluid surface six inches below the top of the drum), an authorized hazardous waste contractor will be scheduled to remove them to proper waste disposal.

2. The Acid Satellite Waste drum is also disposed through the authorized hazardous waste contractor once the drum is full to the level of six inches below the top of the drum.

3. Consolidated autosampler and standard vials are periodically Lab-Packed in drums and disposed through the authorized hazardous waste contractor.

4. The Laboratory Health and Safety Officer will administer the Waste Disposal Program and maintain current information to track quantities of waste generated and stored on-site.

It is the continuous objective of our laboratory to find ways to decrease the amount of waste generated.

STANDARD OPERATING PROCEDURE (SOP) FOR LABORATORY SAMPLE STORAGE, SECURE AREAS AND SAMPLE CUSTODY

SOP NUMBER: **SOP-410**

REVISION NUMBER: **6**

APPROVED BY:

SECTION MANAGER

TECHNICAL DIRECTOR

EFFECTIVE DATE: **09/08/08**

DATE OF LAST REVIEW: **09/08/08**

STANDARD OPERATING PROCEDURE (SOP) FOR LABORATORY SAMPLE STORAGE, SECURE AREAS AND SAMPLE CUSTODY

Empirical Laboratories, LLC is located on the fifth floor of a building which is locked and monitored by a guard after normal business hours. No unauthorized personnel are permitted within the facility without a proper escort and a visitor's badge. During non business hours, all doors to the building are locked and the elevators are security coded (i.e. a code must be entered in order to get the elevator to open on the fifth floor.) All stairway doors are locked and only Empirical Laboratories, LLC personnel have a key to the fifth floor stairway door. The doors to the lab in the hallway have a key code. There is a buzzer at the door to Login to allow entry for sample and supply deliveries.

The majority of samples are shipped in coolers by couriers such as Federal Express and UPS. All couriers are generally received in the Shipping/Sample Receiving (SR) area on the fifth floor. The laboratory is located close to Federal Express (FedEx) distribution station, therefore we pick up our coolers at the FedEx location on Saturdays and transport them directly to the laboratory. Some coolers and/or samples are delivered directly to the SR area by the sampler and/or client. The SR personnel must not leave any packages/cooler without authorized receipt from laboratory personnel. Samples must be accompanied by some type of chain of custody record. Sample receiving personnel sign, and list the date and time received on the chain of custody. The time received must reflect the actual time or validation date and time of receipt for the samples although they may be placed in cold storage and logged into the system at a later time. The method of delivery is listed on the cooler receipt form(CRF). The tracking # (if available) is attached to the chain of custody.

Once sample containers have been assigned a laboratory ID number, they must be checked by another laboratory individual to ensure that the log number on the container matches the log number and sample ID on the Chain of Custody. A Sample Receiving Custody and Disposal Form (attached) must be completed each day. Samples should not leave the log-in area until this has been completed. A copy of this form must be given to the Testing Coordinator at the end of the day. The original is to remain in Sample Receiving until the samples are disposed. Once the document is complete, the original will be kept on file. The following information must be logged onto this form:

- Client and Log #s
- Date/Time Unpacked
- Logged In/Numbered By (Initials)
- 2nd Checked By (Initials)
- Date/Time Placed in Cold Storage
- Storage Area (Walk In, Blue Air-VOCs, Quarantined Soils, Quarantined-VOC, Other)
- Disposed of By/Date
- Method of Disposal

Original samples are stored in following areas of the laboratory.

1. Blue Air Refrigerator in Sample Storage Room: All water VOCs must be stored in the refrigerator.

2. Walk In Refrigerator in Sample Storage Room: All waters for all analyses except VOCs must be stored in this refrigerator.

4. Soil Walkin Refrigerator for all soils.

All soils are treated as quarantined.

All samples must be stored in one of the three refrigerators detailed above with the following exceptions:

1. Matrices that may be adversely affected by the cold temperature. (e.g. surfactant samples, multi-phase samples)

2. Highly contaminated waste or product type samples which could jeopardize the integrity of other samples in the walk in cooler. Often these can be stored at room temperature. If these require refrigeration see the Testing Coordinator for other options.

Any person removing samples from the storage areas listed above, must sign them out on a laboratory custody sheet (attached). The individual performing the processing becomes responsible for the samples at this point. The samples are maintained in the

secure possession of the individual processing the samples. When the processing is completed, the samples are returned and signed back into the appropriate storage area. It must be noted if the entire sample volume was used and that the container was discarded.

Sample extracts and digestates are stored in the following areas:

1. All metals digestates are stored in the metals instrument laboratory. The transfer from the digestion analysts to the ICAP analysts is documented in the metals digestion log book.

2. Non - ZHE TCLP extracts are returned to the refrigerator in which the original samples are stored. For ZHE samples, the extract is returned to the refrigerator in which the original VOC sample containers are stored.

3. Extracts from medium level VOC analyses are also stored in the Soill Walk – in or VOC sample freezer in the VOC Lab.

4. All Organic extracts are stored in a Beverage Air side by side refrigerator in the organic extraction laboratory.

The generation of all sample extracts/digests and their movement through the laboratory will also be tracked on a laboratory custody sheet or in a log book. The individual performing the processing becomes responsible for the samples at this point. The samples are maintained in the secure possession of the individual processing the samples. When the processing is completed, the extracts are returned and signed back into the appropriate storage area. The metals digestates are not removed from the metals instrument laboratory.

After the analytical results have been reported, the original samples, sample extracts, and digestates will remain in secure storage until they are disposed of in accordance with the Waste Disposal Standard Operating Procedure. Samples will be held for a minimum of 30 days after the final report unless specified otherwise. Sample extracts and digestates are held for a minimum of 60 days after the final report unless project specific requirements state otherwise. See SOP No. 405 entitled Laboratory Waste Disposal SOP for guidance on disposal of samples.

The following personnel as of September 08, 2008 have access to all sample storage areas:

Chandra Arthur	Herbie Johnson
Ashley Bester	Dahae Kim
Roger Burr	Dustin Lynch
Tanisha Custer	Marcia McGinnity
Rick Davis	Badeen Mekael
Barbara Dawson	AntonioMontiero
Betty DeVille	Ashley Morris
Amanda Fei	Gino Moore
Kendra Gentry	E. J. Overby
Jason Goodman	Brenton Powers
Sonya Gordon	Brian Richard
Gwen Hallquist	Franklin Rivers
Andrew Holder	William Schwab
Jade Holliman	Christy Thompson
John Hughes	Renee Vogel
Karu Huka	Randy Ward

In the event that an employee is terminated, the supervisor is responsible for collecting the employee's keys.

For additional information see SOP No. 404 entitled Laboratory Sample Receiving, Log-In and Storage.