N00164.AR.001924
NSA CRANE
5090.3a

FINAL INTERIM MEASURES WORK PLAN FOR SOLID WASTE MANAGEMENT UNIT 16 (SWMU 16) CAST HIGH EXPLOSIVES FILL/BUILDING 146 INCINERATOR NSA CRANE IN
8/1/2013
TETRA TECH

FINAL
Interim Measures Work Plan
SWMU 16 – Cast High Explosives Fill/Building 146 Incinerator

Naval Support Activity Crane
Crane, Indiana

Naval Facilities Engineering Command
Midwest

Contract Number N62470-08-D-1001

Contract Task Order F277

August 2013

021307/P

FINAL
INTERIM MEASURES WORK PLAN
SWMU 16 – CAST HIGH EXPLOSIVES FILL/BUILDING 146 INCINERATOR

NAVAL SUPPORT ACTIVITY
CRANE, INDIANA

COMPREHENSIVE LONG-TERM
ENVIRONMENTAL ACTION NAVY (CLEAN) CONTRACT

Submitted to:
Naval Facilities Engineering Command Midwest
201 Decatur Avenue
Building 1A, Code EV
Great Lakes, Illinois 60088

Submitted by:
Tetra Tech
234 Mall Boulevard, Suite 260
King of Prussia, Pennsylvania 19406

CONTRACT NUMBER N62470-08-D-1001
CONTRACT TASK ORDER F277

August 2013

PREPARED UNDER THE DIRECTION OF:

RALPH BASINSKI
PROJECT MANAGER
TETRA TECH
PITTSBURGH, PENNSYLVANIA

APPROVED FOR SUBMISSION BY:

JOHN J. TREPANOWSKI, P.E.
PROGRAM MANAGER
TETRA TECH
KING OF PRUSSIA, PENNSYLVANIA

TABLE OF CONTENTS

SECTION **PAGE NO.**

ACRONYMS 3

1.0 INTRODUCTION 1-1
1.1 PURPOSE AND SCOPE 1-1
1.2 FACILITY DESCRIPTION 1-1
1.3 REGULATORY SUMMARY 1-1
1.3.1 NSA Crane 1-1
1.3.2 SWMU 16 – Cast High Explosives Fill/Building 146 Incinerator 1-2
1.4 REPORT ORGANIZATION 1-4

2.0 SWMU 16 SITE SUMMARY 2-1
2.1 SITE SUMMARY 2-1
2.1.1 Topography 2-1
2.1.2 Surface Drainage 2-1
2.1.3 Site Geology and Soil 2-1
2.1.4 Site Hydrogeology 2-2
2.1.5 Water Supply 2-3
2.2 PREVIOUS INVESTIGATIONS 2-3
2.2.1 Pre-RCRA Facility Investigation 2-3
2.2.2 RCRA Facility Investigation 2-5
2.2.3 Post–RFI Soil Delineation Investigation 2-7

3.0 INTERIM MEASURES WORK PLAN 3-1
3.1 DESCRIPTION OF THE INTERIM MEASURES 3-1
3.2 PERFORMANCE STANDARDS 3-4
3.3 SEQUENCE OF IMWP IMPLEMENTATION 3-9
3.4 STORMWATER POLLUTION PREVENTION 3-12
3.5 OTHER IMWP IMPLEMENTATION REQUIREMENTS 3-12
3.5.1 Utilities 3-12
3.5.2 Protection of Natural Resources 3-13
3.5.3 Traffic Control Plan 3-14
3.5.4 Contractor Requirements 3-15
3.6 IMPLEMENTATION 3-15

4.0 EROSION AND SEDIMENT CONTROL PLAN 4-1
4.1 PURPOSE 4-1
4.2 EROSION AND SEDIMENT CONTROL REQUIREMENTS 4-1
4.3 INSPECTION AND MAINTENANCE OF EROSION AND SEDIMENT CONTROLS 4-2
4.4 SITE RESTORATION 4-3
4.5 RESPONSE PROCEDURES FOR SPILL MITIGATION 4-4

REFERENCES R-1

TABLE OF CONTENTS (Continued)

APPENDICES

A LABORATORY DATA
B UST FIELD NOTES
C SITE PHOTOGRAPHS
D BUILDING 146 DESIGN DRAWINGS
E SUPPLEMENTAL CONRACTOR SPECIFICATIONS

TABLES

NUMBER

2-1 UST Water Sample Data
2-2 UST Soil Sample Screening
2-3 TCE Contamination Area Soil Sample Screening
2-4 Metals Contamination Area Soil Screening
3-1 Work Assignment Responsibility Chart
3-2 Excavation Northing and Easting Coordinates

FIGURES

NUMBER

1-1 Base and Site Location Map
1-2 Site Map
2-1 UST Area Sampling Locations
2-2 TCE Contamination Area Soil Sampling Results and Clean Boundary, Surface Soil (0 - 2 ft)
2-3 TCE Contamination Area Soil Sampling Results and Clean Boundary, Intermediate Soil (2 - 6 ft)
2-4 TCE Contamination Area Soil Sampling Results and Clean Boundary, Deep Soil (6 - 10 ft)
2-5 Bedrock Elevations
2-6 Metals Contamination Area Soil Sampling Results and Proposed Soils Removal Areas
3-1 Soil Excavation Nodes
3-2 Soil Excavation Approach – Northern TCE Areas
3-3 Site Infrastructure Layout and TCE Soil Excavation Limits
3-4 Traffic Control Plan
4-1 Surface Water Drainage Map
4-2 Erosion and Sediment Control Devices
4-3 Erosion and Sediment Control Devices (Sheet 2 of 2)

ACRONYMS

Army	Department of the Army
amsl	above mean sea level
bgs	below ground surface
CFR	Code of Federal Regulations
CLEAN	Comprehensive Long-Term Environmental Action Navy
COPC	chemical of potential concern
CTO	Contract Task Order
cy	cubic yard
DNR	Department of Natural Resources
DRO	diesel range organics
E&S	erosion and sediment
EP	Extraction Procedure
ESA	Endangered Species Act
ft	feet
GRO	gasoline range organics
HBX	high blast explosive
HMX	octahydro-1,3,5,7-tetranitro-1,3,5,7-tetrazocine
HSWA	Hazardous and Solid Waste Amendments
IAC	Indiana Administrative Code
IAS	Initial Assessment Study
IC	Indiana Code
IDEM	Indiana Department of Environmental Management
IM	Interim Measure
IMWP	Interim Measures Work Plan
IR	Installation Restoration
lb	pound
LDPE	low-density polyethylene
MCL	maximum contaminant level
MCS	media cleanup standard
MSDS	Material Safety Data Sheet
NA	not applicable
NAVFAC	Naval Facilities Engineering Command
Navy	Department of the Navy

NSA	Naval Support Activity
OICC	Officer in Charge of Construction
PAH	polynuclear aromatic hydrocarbon
PCB	polychlorinated biphenyl
Plz	Lower Pennsylvanian water-bearing zone
Pmz	Middle Pennsylvanian water-bearing zone
ppm	parts per million
psl	project screening level
psf	pounders per square foot
Puz	Upper Pennsylvanian water-bearing zone
RCRA	Resource Conservation and Recovery Act
RDX	hexahydro-1,3,5-trinitro-1,3,5-triazine
RFA	RCRA Facility Assessment
RFI	RCRA Facility Investigation
SAIC	Science Applications International Corporation
SAP	Sampling and Analysis Plan
SVOC	semivolatile organic compound
SWMU	Solid Waste Management Unit
TCE	trichloroethene
Tetra Tech	Tetra Tech, Inc.
TNT	2,4,6-trinitrotoluene
TOC	total organic carbon
TPH	total petroleum hydrocarbon
µg/L	micrograms per liter
USEPA	United States Environmental Protection Agency
USFWS	United States Fish and Wildlife Services
UST	underground storage tank
VIM	voluntary interim measure
VOC	volatile organic compound
WWTP	Wastewater Treatment Plant

1.0 INTRODUCTION

1.1 PURPOSE AND SCOPE

The purpose of this document is to present the Interim Measures Work Plan (IMWP) for the Cast High Explosives Fill/Building 146 Incinerator, also known as Solid Waste Management Unit (SWMU) 16, Naval Support Activity (NSA) Crane located in Crane, Indiana. The IMWP includes the excavation and off-site disposal of accessible contaminated soils within SWMU 16. The IMWP was prepared for the United States Department of the Navy (Navy), Naval Facilities Engineering Command (NAVFAC) Midwest by Tetra Tech, Inc. (Tetra Tech) under Contract Task Order (CTO) F277 of the Comprehensive Long-Term Environmental Action Navy (CLEAN) IV Contract Number N62470-08-D-1001.

1.2 FACILITY DESCRIPTION

NSA Crane is located in the southern portion of Indiana, approximately 75 miles southwest of Indianapolis and 71 miles northwest of Louisville, Kentucky, immediately east of Crane Village and Burns City (Figure 1-1). NSA Crane encompasses 62,463 acres (approximately 98 square miles), most of which are located in the northern portion of Martin County. Smaller portions of NSA Crane are located in Greene, and Lawrence Counties. NSA Crane is located in a rural, sparsely populated area. Most of NSA Crane is wooded, and the surrounding area is wooded or farmed land.

NSA Crane provides material, technical, and logistical support to the Navy for equipment, shipboard weapons systems, and nonexpendable ordnance items. In addition, NSA Crane supports the Crane Army Ammunition Activity with production, renovation, storage, shipment, demilitarization, and disposal of conventional ammunition.

1.3 REGULATORY SUMMARY

1.3.1 NSA Crane

Following promulgation of the Resource Conservation and Recovery Act (RCRA) hazardous waste regulatory program, NSA Crane filed notification and application to operate as a RCRA hazardous waste treatment, storage, or disposal facility in October 1980. Interim status was granted subject to operating requirements and applicable technical standards found in Title 40 of the Code of Federal Regulations (CFR), Part 265.

Corrective action programs established as part of the 1984 RCRA Hazardous and Solid Waste Amendments (HSWA) required NSA Crane to address past releases of hazardous waste or hazardous constituents at SWMUs. Accordingly, NSA Crane submitted a Hazardous Waste Management Report, and a RCRA Facility Investigation (RFI) was conducted to characterize the potential for releases of hazardous waste or constituents from approximately 100 SWMUs identified during the RCRA Facility Assessment (RFA).

On December 23, 1989, the United States Environmental Protection Agency (USEPA) issued the federal portion of the final RCRA Part B Permit for NSA Crane to the Navy. USEPA renewed the permit in 1995. The Indiana Department of Environmental Management (IDEM) now has responsibility for the Federal Corrective Action Permit. IDEM renewed the Corrective Action Permit on October 18, 2001. However, certain ongoing corrective actions, including corrective actions at SWMU 16, will continue under the USEPA/IDEM Work Sharing Agreement for Corrective Action Activities at NSA Crane.

1.3.2 SWMU 16 – Cast High Explosives Fill/Building 146 Incinerator

SWMU 16, which is approximately 16 acres in size, is located in the north-central portion of NSA Crane. Figure 1-1 shows the general location of NSA Crane in southern Indiana, and the location of SWMU 16 within NSA Crane.

Buildings and gravel parking lots cover most of the northern portion of SWMU 16 in the vicinity of Building 146, and mostly grassy and wooded areas are located south, west, and east of Building 146 (Figure 1-2). Building 146, which has an area of approximately two-thirds of an acre, was explosives fill and pressure washout facility and included a trichloroethene (TCE) degreaser. Explosives were washed out of containers such as bomb casings, with water and the washout materials were directed to settling tanks. Outfalls from the eastern and western settling tanks, at Building 146 discharged to swales that ultimately discharged to Boggs Creek via Turkey Creek until the mid-1990s (Figure 1-2). In 1998 it was found that discharges of floor drains located near the degreaser were routed through terra cotta pipe to the west settling tank. The TCE degreaser was removed from Building 146 and the degreaser area floor drain lines leading from Building 146 were plugged to prevent fluid flow through the pipes to the settling tanks. Three oil-fired, rotary kiln incinerators, with fuel storage tanks were located on the south end of Building 146. These incinerators were used for the thermal destruction of the explosives material from small munitions items and components. Ashes from the incinerator were stored in a pile that was located directly south of the incinerators. The incinerators were closed in the early 1990s, and the waste ash piles were removed along with contaminated soil.

Constructed in 1943, Building 146 was an explosives fill and pressure washout facility and included three oil-fired, rotary kiln incinerators and associated aboveground No. 2 fuel oil tanks. Beginning in the 1960s, the kilns were used to demilitarize munitions through burning or detonation. Munitions placed in the kilns were exposed to flame combustion, which resulted in the destruction of the energetics (explosives, propellants, pyrotechnics) contained within the munitions. Initially, ash and slag residues were piled on the ground. Later, ash and other incineration residues were collected and transferred to the NSA Crane hazardous waste storage facility prior to off-site disposal. The incinerators were removed and underwent RCRA closure in the early 1990s. The fuel storage tanks, ash pile remnants and visibly contaminated soils were subsequently removed under a Voluntary Interim Measure (VIM) in 1995, as discussed in Section 2.0.

Site operations also included cast loading that involved melt pouring of 2,4,6-trinitrotoluene (TNT), hexahydro-1,3,5-trinitro-1,3,5-triazine (RDX), and high blast explosive (HBX) into projectiles. HBX is a family of binary explosives that are composed of RDX, TNT, powdered aluminum, and D-2 wax with calcium chloride.

Other operations included demilitarization and incineration of ammunition (small caliber ammunition, shotgun shells, fuses, detonators, boosters, tracers, flare candles, and smoke flares) and demilitarization and high-pressure washout. Steam-out of United States Department of the Army (Army) ammunition and rockets containing TNT and Composition B (RDX, TNT, and wax) was reportedly conducted between 1954 and 1956.

Currently, SWMU 16 is intermittently active for the renovation, rework, and breakdown of munitions and ammunition demilitarization operations.

Prior to 1978, wastewater discharged through a storm drain into a ditch and into the local surface water. Additionally, the settling tanks located on the eastern and western sides of Building 146 received discharges from the floor drains and building downspouts; these settling tanks also drained into ditches in the woods. The piping associated with these settling tanks was clay (terra cotta) tile pipes. The floor drains in Building 146 have been sealed. Building downspouts were rerouted to drainage ditches in 1997. The discharge outlets from the settling tanks are now sealed. However, the possibility that wastewater could have migrated to the settling tanks or into the environment through the settling tank clay tile pipes exists. In 1974 the north settling tank was installed. This settling tank received hotwell waters and discharged to the sanitary sewer system.

After 1978, the SWMU 16 wastewater was transported to the NSA Crane Rockeye Treatment Facility for treatment. In 1997, the SWMU 16 sewer lines that formerly discharged to the settling tanks were rerouted to the NSA Crane sanitary sewer system.

The soil at SWMU 16 has been investigated extensively. The following is a listing of the SWMU 16 investigations:

- Pre-RCRA Facility Investigation (Halliburton NUS, 1992)
- RCRA Facility Investigation (Tetra Tech, 2011)
- Long-Term Groundwater Monitoring (SAIC, 2002a, 2002b, 2003a, and 2003b)
- Geophysical Survey (Tetra Tech, 2009)
- Soil Delineation Sampling Data Summary Report (Tetra Tech, 2012)

A summary of the environmental investigations and previous Interim Measure (IM) conducted at SWMU 16 is provided in Section 2.0.

1.4 REPORT ORGANIZATION

The following highlights the information contained in the remainder of this document:

- Section 2.0 summarizes site characteristics, including site description, summary of environmental investigations conducted at SWMU 16, and nature and extent of contamination.

- Section 3.0 presents the IMWP.

- Section 4.0 presents erosion and sediment (E&S) control features proposed for the IMWP described in Section 3.0.

PGH:P:\GIS\CRANE_NSWC\MAPDOCS\MXD\SWMU16_LOCATION_MAP.MXD 2/13/2013 KM

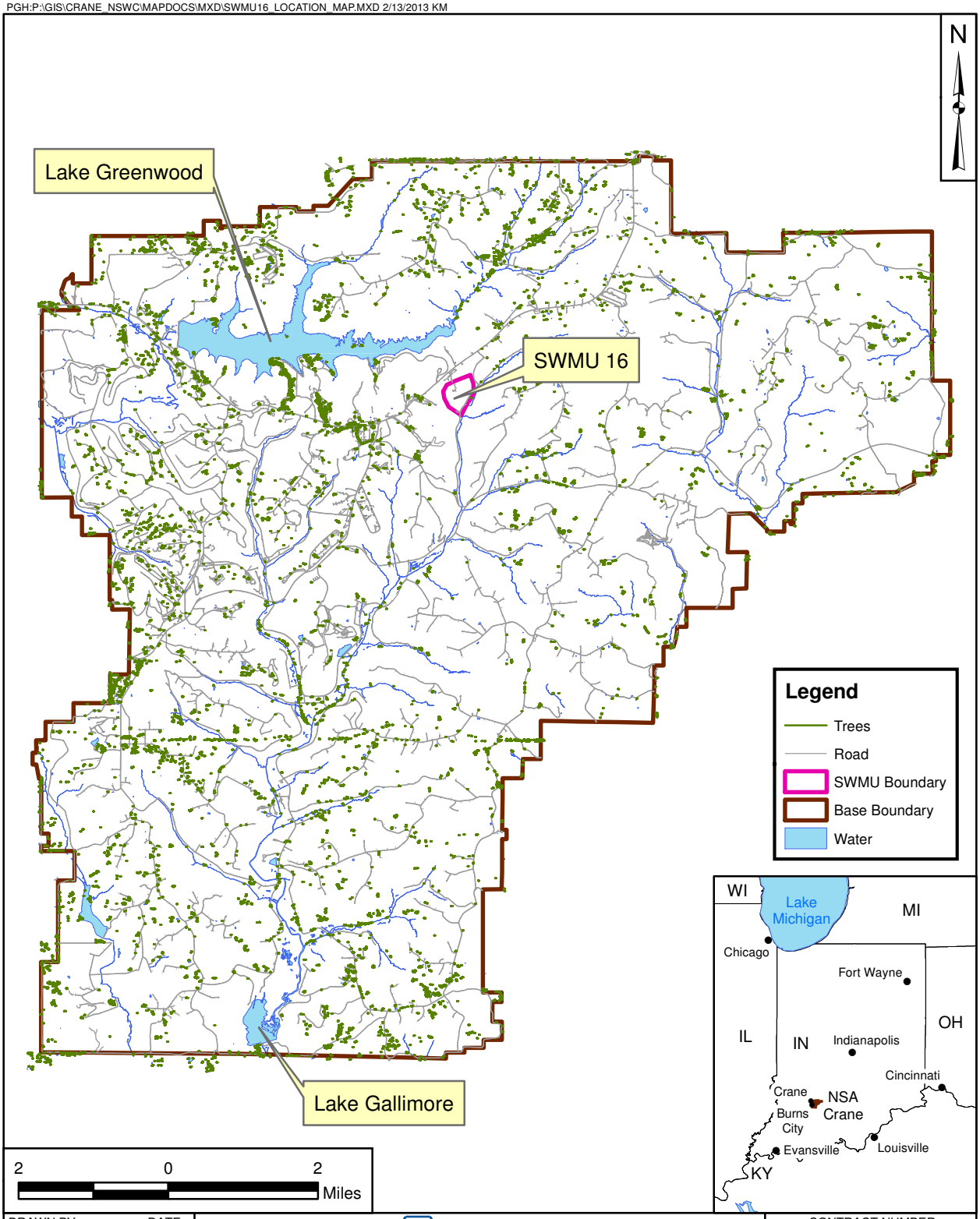

DRAWN BY K. MOORE	DATE 09/26/08	TETRA TECH	CONTRACT NUMBER CTO F277
CHECKED BY J. DUCAR	DATE 02/13/13	BASE AND SITE LOCATION MAP SWMU 16 - CAST HIGH EXPLOSIVES FILL / B146 INCINERATOR NSA CRANE CRANE, INDIANA	OWNER NO. —
REVISED BY S. PAXTON	DATE 02/13/13		APPROVED BY — / DATE —
SCALE AS NOTED			FIGURE NO. FIGURE 1-1 / REV 0

PGH P:\GIS\CRANE_NSWC\MAPDOCS\MXD\SWMU16_FEATURES_ALT.MXD 03/25/13 SP

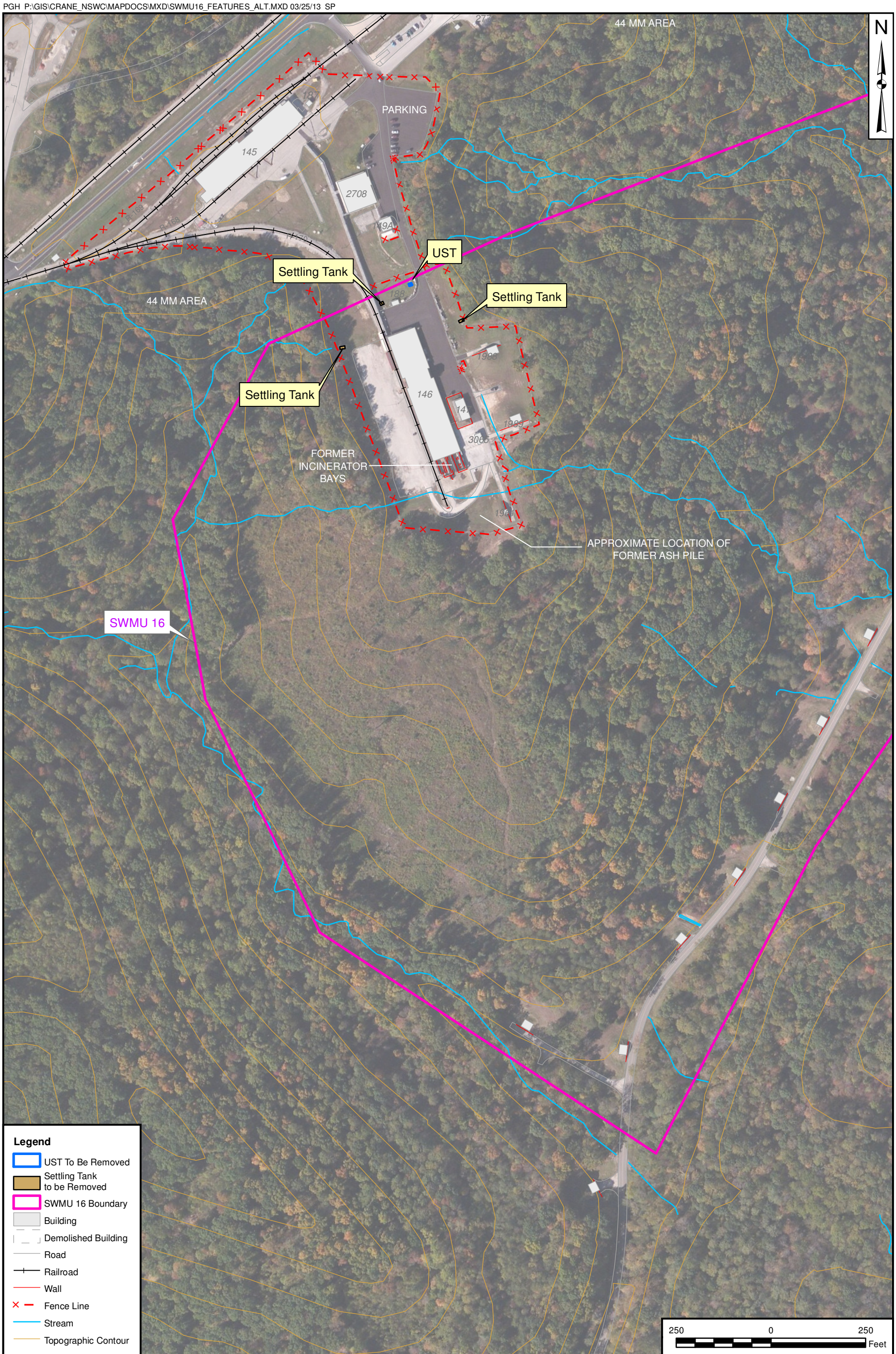

DRAWN BY	DATE
J. ENGLISH	04/15/11
CHECKED BY	DATE
R. BARRINGER	03/25/13
REVISED BY	DATE
S. PAXTON	03/25/13
SCALE	
AS NOTED	

NAVFAC

SITE MAP
SWMU 16 - CAST HIGH EXPLOSIVES FILL / B146 INCINERATOR
NSA CRANE
CRANE, INDIANA

CONTRACT NUMBER	CTO NUMBER
02127	F277
APPROVED BY	DATE
—	—
APPROVED BY	DATE
—	—
FIGURE NO. 1 - 2	REV 0

2.0 SWMU 16 SITE SUMMARY

2.1 SITE SUMMARY

A general description of SWMU 16 is provided in Section 1.0. The following sections describe the physical and geophysical conditions of areas to be addressed in the IMWP. These descriptions were excerpts from the SWMU 16 RFI Report (Tetra Tech, 2011) and the SWMU 16 Soil Delineation Sampling Data Summary Report (Tetra Tech, 2012).

2.1.1 Topography

Highway 45 runs in a northeast-southwest direction along a ridge top that is also a drainage divide. Building 146 is located on a relatively flat area on the top of a north-south ridge. SWMU 16 elevations range from approximately 760 to 766 feet (ft) above mean sea level (amsl). The elevation decreases to the east, south, and west at a slope of 18 to 20 percent (Figure 1-2).

2.1.2 Surface Drainage

Surface drainage flows into drainage ditches and culverts that flow into unnamed intermittent streams that discharge to Turkey Creek. The eastern portion of SWMU 16 drains into drainage ditches that flow to the east and then to the southeast. These drainage ditches discharge to Turkey Creek at locations approximately 1,500 ft east and 1,500 ft southeast of Building 146.

The western portion of SWMU 16 drains into drainage ditches that flow to the west for approximately 500 ft before entering an unnamed intermittent stream. This stream flows to the south and then to the southeast before it discharges to Turkey Creek approximately 2,000 ft south-southeast of Building 146. The elevation of Turkey Creek at this location is approximately 575 ft amsl. The drainage ditches are usually dry and are typically only wet during and immediately after rainfall.

2.1.3 Site Geology and Soil

Natural unconsolidated materials at the top and sides of the ridge are residual soils formed from weathering of the underlying bedrock. The residual soils are predominantly fine-grained materials including varying amounts of clay, silt, and sand. The maximum observed thickness was approximately 13 ft on the top of the ridge. Elsewhere, residual soils were generally less than 10 ft thick.

2.1.4 Site Hydrogeology

The Pennsylvania bedrock encountered during the field investigations was divided into three water-bearing zones, Upper (Puz), Middle (Pmz), and Lower (Plz) based on stratigraphy, differences in water-yielding properties, and differences in hydraulic potential. Shale units and occasional siltstone lenses separate the water-bearing zones and appear to act as aquitards.

In summary, most of the groundwater in the Puz and Pmz is flowing to the southeast, south, and southwest. The Puz and Pmz intercept the land surface (i.e., crop out) along the upper portions of the ridge between elevations of 730 and 760 ft amsl. Groundwater in the Puz and Pmz that reaches the outcrop area is taken up by vegetation and transpired, seep into drainage ditches at the ground surface and join surface water in the ditches flowing toward Turkey Creek, or will migrate down the side of the hill along the bedrock/soil interface. A small portion of the Pmz groundwater is migrating downward through a shale and siltstone aquitard and enters the Plz. Groundwater in the Plz is primarily flowing toward the nearest streams.

The Monitored Natural Attenuation (MNA) Final Report for SWMU 16 (Round No. 9) dated July 2010, presents the recorded groundwater elevations for SWMU 16 wells from nine different monitoring rounds beginning in May 2003 and continuing through April 2007. This SWMU 16 MNA report (Tetra Tech, 2010) includes groundwater elevation data for several shallow (Pennsylvanian upper zone or Puz) monitoring wells in the SWMU 16 area. Based on the recorded water table elevation data for the Puz groundwater monitoring wells at SWMU 16, most recorded groundwater elevations are below the recorded well-specific elevation for the top of bedrock. Two shallow monitoring wells on the western side of the SWMU 16 site (16MWT02 and 16MWT13) had recorded groundwater elevations above the local top of bedrock elevation. At this location, TCE-contaminated groundwater may reach the bedrock/overburden interface. These two Puz wells are both less than 20 feet deep, are located on the western margin of the Building 146 area (near the west settling tank), are located outside the limits of the planned excavation for TCE-contaminated soils, and appear to have been constructed with the top of the well screen extending above the top of bedrock elevation. The maximum observed groundwater elevation was in these wells was 753.8 feet above mean sea level (amsl). The lowest bedrock elevation in the excavation area is 755.6 feet amsl. The other Puz wells at monitored at SWMU 16 for the MNA Report typically had depths of at least 20 to 24 feet and did not feature groundwater elevations above the top of bedrock. During the installation of multiple borings in the overburden at SWMU 16, especially within the proposed TCE soil excavation areas adjacent to Building 146, no groundwater was encountered in those soil borings, indicating that groundwater elevations were below the local bedrock

elevation. Based on these data, it is not expected that groundwater will be present in the proposed TCE soil excavation areas above the local bedrock surface during excavation.

2.1.5 Water Supply

Groundwater at SWMU 16 is not currently used and there are no future use plans for groundwater. Lake Greenwood, an 800-acre, man-made, spring-fed lake in the northern portion of NSA Crane (Figure 1-1), is the main source of drinking water at NSA Crane and is expected to remain as such in the future. Lake Greenwood is located approximately one-half mile northwest of SWMU 16.

2.2 PREVIOUS INVESTIGATIONS

Previous investigations at the SWMU 16 are summarized below.

2.2.1 Pre-RCRA Facility Investigation

This section provides a summary of investigations and other activities conducted before the RFI.

A water sample from Building 146 collected in 1972 was reported to contain detectable levels of the explosives HMX and RDX (Halliburton NUS, 1992).

In 1979, surface water and sediment samples were collected near the settling tanks that, until 1978, had received Building 146 floor drain discharges, and from Turkey Creek. Surface water samples from the settling tanks contained detectable concentrations of TNT and RDX; however, HMX was not detected. Sediment samples from the settling tanks contained detectable concentrations of HMX, RDX, and TNT. No measurable concentrations of any explosives were detected in the surface water and sediment samples collected from Turkey Creek (Army, 1980).

In 1982, two incinerator ash pile samples were collected. The sample results indicated that the ash was a RCRA hazardous waste because the concentrations of barium, cadmium, and lead were greater than the Extraction Procedure (EP) Toxicity limits (Halliburton NUS, 1992).

In July 1983, four groundwater monitoring wells were installed near Building 146. Soil and groundwater samples were collected and analyzed for metals and selected organic compounds. The concentrations of lead and zinc in soil were greater than average United States soil concentrations. The concentrations of cadmium, chromium, lead, mercury, nickel, and TCE in groundwater were greater than federal primary drinking water standard maximum contaminant levels (MCLs) in effect at that time. TCE was the only

organic compound detected in groundwater samples; however, it was not detected in soil samples collected at the same locations.

As part of the closure activities, soil samples were collected from the Building 146 incinerator bays. Between October and December 1989, 133 soil samples were collected from 34 locations at depth ranges from 0 to 2 ft below ground surface (bgs). These samples were analyzed for metals and polychlorinated biphenyls (PCBs). Crane sitewide background concentrations were not available for comparison at this time; therefore, in March 1990, 16 soil samples were collected from four locations to represent background conditions. PCBs were not detected in the 1989 soil samples; however, the concentrations of arsenic, cadmium, chromium, selenium, and silver in these soil samples were greater than 1990 background concentrations.

Voluntary Interim Measure

The incinerators at Building 146 were removed and underwent RCRA closure in the early 1990s. In 1995 a voluntary interim measure (VIM) was conducted at SWMU 16. It was discovered during the VIM that TCE was entering the east and west settling tanks through inlet piping. The VIM objectives were to:

- Sample sludge materials contaminated with explosives, lead, and TCE in the east and west settling tanks.
- Remove and dispose contaminated sludges recovered from the settling tanks.
- Clean settling tanks using a high-pressure low-volume wash system.
- Sample settling tank decontamination fluid to verify that contaminants were successfully removed.
- Remove three aboveground diesel fuel storage tanks and associated diesel-contaminated soils.
- Excavate and remove the slag/ash piles
- Sample the remaining soils and remove the remaining contaminated soils from the location of the former ash piles.
- Collect soil removal confirmation samples.
- Backfill and restore the excavated areas.

Between 1996 and 1998, a second VIM was conducted at SWMU 16. The objectives of the second VIM were to:

- Sample and treat TCE-contaminated water that had collected in the east and west settling tanks.

- Repair broken sewer pipes.
- Reroute Building 146 roof drains to eliminate roof drain flow into the settling tanks and drainage ditches.
- Grout and abandon building floor drains.
- Install settling tank pumps and new piping from the settling tanks to the NSA Crane sanitary sewer system.
- Conduct additional soil sampling.
- Remove PCB-contaminated soil.

During the VIM, the settling tanks were thoroughly cleaned using a high-pressure, low-volume wash system. The decontaminating fluid was sampled for verification of the sumps walls and floor cleanliness. Prior to the cleaning, sludge residues were removed from the settling tanks and disposed.

2.2.2 RCRA Facility Investigation

Three rounds of sampling were conducted from February 2003 through January 2004 as part of the RFI. The following is a summary of the RFI. Detailed information is provided in the RFI Report (Tetra Tech, 2011).

2.2.2.1 Soil

TCE contamination is greatest beneath Building 146 and extends primarily to the west from the building. The source of TCE is suspected to be settling tanks and associated piping. The operations that caused the release of TCE are not known, however, drain lines were located in the vicinity of a TCE degreaser. The TCE degradation product cis-1,2-dichloroethene was also detected. The detections of polynuclear aromatic hydrocarbons (PAHs) greater than screening levels were limited to the area east of the northern portion of Building 146. Metals contamination is greatest in surface soil south of Building 146 and is most likely associated with past incinerator operations. The primary contaminants that appear to be site related are antimony, copper, lead, and zinc, which are used in shell casings and bullets, although other metals (chromium and iron) may be minor contaminants. The detected concentrations of several metals that were identified as chemicals of potential concern (COPCs) are representative of background

conditions. These include aluminum, arsenic, barium, cadmium, cobalt, manganese, nickel, and vanadium.

2.2.2.2 Groundwater

Groundwater in several Puz and Pmz wells contained concentrations of volatile organic compounds (VOCs) that were greater than human health screening levels. Little VOC contamination was detected in the Plz and valley deposit aquifers. TCE exhibited the greatest concentrations of all VOCs. Degradation products of chlorinated VOCs were also detected. The concentrations of TCE and other VOCs are highest on the ridge top near the northern end of Building 146 and decrease in downgradient directions toward the valleys below. The greatest TCE concentrations were detected near the settling tanks.

RDX was the most widely detected explosive compound in the Puz and Pmz. RDX was not detected in the Plz and valley deposit aquifers. The RDX concentrations are greatest at the top of the ridge within the SWMU 16 operational area. From there, the concentrations decrease in downgradient directions away from the top of the ridge and down the hillsides. RDX degradation products were also detected.

Potential site-related metals detected in the Puz and Pmz include aluminum, arsenic, chromium, iron, lead, nickel, and vanadium. The greatest concentrations of aluminum were detected in the northern portion of the site. The greatest concentrations of arsenic were detected east of Building 146, with apparently random spatial patterns. Chromium contamination does not appear to be significant, and it is not clear whether this metal is a site-related contaminant. The greatest concentrations of iron were consistently measured in wells located southwest and east of Building 146, and it is not clear whether iron is a site-related contaminant. The greatest concentrations of lead were detected in a well located east of Building 146. The greatest concentrations of nickel were detected in a well located east of Building 146. It is not clear, however, that the elevated nickel concentrations are associated with Building 146 or other site operations because the spatial patterns appear to be random. The greatest concentrations of vanadium were detected in a well located east of Building 146. Most other detections were less than the human health screening value. The detections of aluminum, arsenic, chromium, iron, lead, and vanadium were greatest in unfiltered samples. Lesser concentrations were detected in filtered samples, and the detections of these metals may be associated with suspended matter in the groundwater.

The greatest concentrations of metals in the Plz and valley deposit aquifers were detected in the eastern portion of SWMU 16. The greatest average and maximum concentrations of arsenic, cadmium, cobalt, manganese, nickel, and zinc were detected in the Pmz. The greatest concentrations of aluminum, antimony, chromium, copper, iron, lead, and vanadium were detected in the Plz. Lesser concentrations

of these 14 metals were detected in the Puz. If SWMU 16 was the source of metals contamination, it does not seem likely that greater concentrations would be detected in the Plz than in the Puz and Pmz. The metals detected in groundwater may be related to natural conditions.

2.2.2.3 Surface Water and Sediment

The detections of TCE greater than human health screening levels were associated with samples collected from drainage ditches east of Building 146. TCE was not detected in sediment.

A small amount of explosives contamination was detected in surface water and sediment in the eastern portion of the site. Explosives were not detected in the farthest downgradient sample locations. There were no detections of explosives to the west and south of SWMU 16. The greatest concentrations of explosives were observed in samples collected from the settling tank located north of Building 146.

The concentrations of several metals in surface water and/or sediment were greater than surface water or sediment screening values at numerous locations. These included aluminum, antimony, arsenic, cadmium, chromium, copper, iron, lead, nickel, vanadium, and zinc (Tetra Tech, 2011).

2.2.3 Post–RFI Soil Delineation Investigation

Based on the findings in the RFI, the Navy determined that an interim measures action would be conducted to reduce the human health and ecological risks associated with the TCE Contamination Area and Metals Contamination Area. Efficient implementation of the IM required a more precise delineation of the extent of soils contamination in each area. In addition, after the RFI field activities were completed, an UST was discovered in an area northeast of Building 146.

Figures 2-1 through 2-6 present the SWMU 16 sample locations, and some of these include contaminant concentrations in excess of the applicable screening criteria. Appendix A presents the cumulative analytical data from the RFI and post-RFI soil sampling events for the areas addressed by this IMWP.

Two rounds of soil delineation sampling were conducted for SWMU 16 to complete the surface and subsurface soil delineation at the TCE Contamination Area (beneath Building 146 and extending primarily to the west from the building), the Metals Contamination Area (south of Building 146 near where the incinerator ash piles had been located), and the UST Area (about 110 feet north of Building 146). Round 1 sampling was performed in August 2011, and the subsequent Round 2 was completed during October and November 2012, as presented below.

The following presents the results of the SWMU 16 soil delineation and UST sampling data analyses.

2.2.3.1 UST Investigation

In July 2009, a geophysical survey was conducted with the objective to search for, and if detected, locate a possible UST in the area of the buried fuel tank hatch shown on a historical engineering drawing. The survey data indicated the presence of a small capacity UST. The location of the UST is shown on Figure 2-1.

Metal signs were found on the ground in the area indicating that the UST may have contained unleaded gasoline. No odor of gasoline was observed inside the hatch cover. Reportedly, a concrete pad was located adjacent and to the south of the location of the UST. The purpose of this former pad is unknown, but it is possible it had some relation to former fueling operations. Additionally, a possible vent pipe and hatch were present in the location where the UST was discovered.

In July 2011, a Tetra Tech safety and health representative was on site to open the UST for sampling. Information gathered during the UST preparation for sampling indicated that the UST may have been cleaned, filled with water, and then sealed. Additionally, the tank was estimated to be approximately 2 ft, 6 inches in diameter, and less than 8 ft in length (i.e., the UST capacity was less than 300 gallons). Indications were that the UST was most likely an overflow tank associated with a larger underground fill tank, which may have been previously removed because there are no indications of another UST in the vicinity.

At the surface of the suspected UST is a concrete block, access vault, approximately 18 by 17 inches. Appendix B contains the field report of the UST investigation.

<u>UST Water Data</u>

One water sample was collected to determine the chemical composition of the tank water. The sample was analyzed for VOCs, PAHs, total petroleum hydrocarbon (TPH)-gasoline range organics (GRO), PCBs, pesticides, and total metals. Table 2-1 presents the analytical results for the SWMU 16 UST water sample. The results of the water sample indicated fuel constituents were present in the sample. These include ethylbenzene at 12 micrograms per liter (µg/L) (MCL - 700 µg/L), total lead at 1,500 µg/L which is well above the MCL of 150 µg/L, but below the TC level of 5,000 µg/L, and toluene at 0.54J µg/L (MCL - 1,000 µg/L). In addition, TPH-GRO was detected at a concentration of 230 µg/L. Several additional

metals were also detected, including antimony, arsenic, cadmium, copper, nickel, selenium, silver and zinc.

UST Soil Data

Eight soil borings were advanced within the area surrounding the UST. Surface and subsurface soil samples were collected to determine the presence/absence of contamination in the area of the UST. All samples were analyzed for VOCs, TPH–diesel range organics (DRO), TPH-GRO and lead. Table 2-2 presents the SWMU 16 soil samples that were collected in the UST Area screened against the appropriate criteria.

The only exceedance of a project screening level (PSL) in the surface soil samples was for acrolein, which was detected in a duplicate sample. There were no exceedances of PSLs for any of the subsurface soil samples.

Based on the evaluation of the soil data for the UST Area, no soil removal action is required.

2.2.3.2 TCE Contamination Area Soil Delineation Summary

Table 2-3 presents the TCE Contamination Area surface and subsurface soil data screened against the applicable media cleanup standards (MCSs) for VOCs. Figure 2-2 presents the TCE concentrations above the MCSs for the surface soil data. The table and figure utilizes the entire VOC dataset for all samples collected at SWMU 16 as part of the RFI, as well as the soil delineation sampling events.

TCE was the only constituent to exhibit concentrations above MCSs in both rounds of delineation sampling. Several surface soil samples showed exceedances, mainly in the southern extent of sampling.

Figures 2-3 and 2-4 present the TCE concentrations above MCSs for the subsurface soil data for the 2 to 6 feet bgs and 6 to 10 feet bgs samples, respectively. The figures utilize the entire VOC dataset for all samples collected at SWMU 16. The 2 to 6 foot bgs area encompasses the contamination observed in both the 0 to 2 foot bgs and 6 to 10 foot bgs depth horizons.

Similar to the surface soil data, TCE was the only constituent to exhibit concentrations above MCSs in the subsurface soil samples. Exceedances were observed in the northern, western, and southern investigation areas.

Based on the results of the Round 2 soil delineation data, the extent of TCE soil contamination has been fully delineated, both horizontally and vertically (top of bedrock), in the TCE Contamination Area of SWMU 16.

Figure 2-5 presents the top of bedrock contour map. As depicted, the deepest bedrock depths (6 to 10 ft bgs) are located in the north-northeastern portion of the proposed excavation area, and the shallowest (2 ft bgs) are located in the southern portion.

2.2.3.3 Metals Contamination Area Soil Delineation Summary

Table 2-4 presents the Metals Contamination Area soil data screened against the applicable MCSs. The MCSs were developed in the Technical Memorandum Ecological Media Cleanup Goals for SWMU 16 Surface Soil (Tetra Tech, 2013). Figure 2-6 presents the surface soil data for antimony, copper, lead and zinc, and the proposed soil removal areas. Both the Table and Figure utilize the entire dataset for all samples collected at SWMU 16 as part of the RFI, as well as the most recent soil delineation sampling event, with one exception. Samples from locations 16SS100 through 16SS113, which were collected specifically for the toxicity test that was used to develop the MCS values, are not presented on Table 2-4 or Figure 2-6. These samples were collected from different depth intervals than the other surface soil samples because the goal was to collect samples from the biologically active zone (i.e., the root zone) and to collect samples with metals concentrations over a concentration gradient. Therefore, most of these samples were collected from a shallower depth than the other surface soil samples that were collected from 0 to 2 feet below ground surface based on the depth of the root zone. Also, samples 16SS100 through 16SS113 were collected at locations of existing soil samples, so metals results samples from 0 to 2 feet in depth are already available at those 14 sample locations. That being said, even had those samples been used, no additional locations would have been included in the removal area for the following reasons:

- 16SS101, which had the greatest concentrations of metals, is located in the railroad bed where 16SS020 was collected so it would not have been recommended for removal.

- 12SS104, the only other sample with concentrations that exceeded the PRGs, was collected near 16SS016. However, the lead concentration at this location (656 mg/kg), just slightly exceeded the plant PRG of 652 mg/kg. Similarly, the zinc concentration at this location (1,950 mg/kg), just slightly exceeded the plant PRG of 1,716 mg/kg. Therefore, because of the slight exceedences of the PRGs at 16SS104 and because of the much lower concentration in 16SS016, this location would not have been recommended for remediation.

Several exceedances of all four metals were observed, with the majority of the highest exceedances co-located in the eastern and southeastern portions of the area. Based on the Round 2 data, the extent of metals concentrations above MCSs has been fully delineated in the surface soil horizontally in the Metals Contamination Area of SWMU 16. Also, as presented in the SWMU 16 Soil Delineation Sampling Data Summary Report (Tetra Tech, 2012), there are seven additional locations, in addition to the ones discussed that are not proposed for removal, even though the MCSs are exceeded for some of the metals. The rationales regarding why those locations are not proposed for removal are discussed below:

- 16SB020: The sample from this location was collected within the railroad bed so there is no ecological habitat in this area so it is not necessary to remove soil from this location.

- 16SB177 and 16SB179: These sample locations are within the wooded area in the south eastern portion of SWMU 16. The only MCSs that are exceeded there are based on plants; however, removing the soil would result in removing the trees and other vegetation. Also, because concentrations of metals just slightly exceed the plant MCSs and the area is wooded, it is not likely that significant impacts to plants are occurring. Therefore, the removal of soil would likely have a greater impact on the vegetation than is currently occurring, so a removal of soil around these sample locations is not warranted.

- 16SB009, 16SB010, and 16SB184: Soil from these sample locations only slightly exceeded the background concentration for antimony. No other metals exceeded a MCS at these locations. Also, as discussed in the Technical Memorandum (Tetra Tech, 2010), there is uncertainty in whether the impacts observed in the plant toxicity test was due to antimony. For these reasons, the soil around these sample locations is not proposed for removal.

- 16SB015: Soil from this sample location only slightly exceeded the plant MCS for copper. The plant MCS for copper is based on a NOEC so impacts to plants at this level cannot be determined, but it would be greater than 253 mg/kg. For that reason, it is not likely the copper from this location is significantly impacting plants so the soil around this sample location is not proposed for removal.

TABLE 2-1

UST WATER SAMPLE DATA
SWMU 16
NSA CRANE
CRANE, INDIANA

LOCATION	**16UST01**	
SAMPLE ID	**16UST01-20110705**	**16UST01-20110826**
SAMPLE DATE	**20110715**	**20110826**
METALS (UG/L)		
ANTIMONY	2.2 J	
ARSENIC	11	
BERYLLIUM	0.2 U	
CADMIUM	21	
CHROMIUM	0.91 J	
COPPER	25	
LEAD	1500	
MERCURY	0.1 U	
NICKEL	3.3 J	
SELENIUM	7.4	
SILVER	0.20 J	
THALLIUM	0.2 U	
ZINC	7700	
PCBS (UG/L)		
AROCLOR-1016	0.047 UJ	
AROCLOR-1221	0.047 UJ	
AROCLOR-1232	0.047 UJ	
AROCLOR-1242	0.047 UJ	
AROCLOR-1248	0.047 UJ	
AROCLOR-1254	0.047 UJ	
AROCLOR-1260	0.047 UJ	
TOTAL AROCLOR	0.047 UJ	
PESTICIDES (UG/L)		
4,4'-DDE		0.05 UJ
4,4'-DDT		0.05 UJ
ALDRIN		0.05 UJ
ALPHA-BHC		0.05 UJ
BETA-BHC		0.05 UJ
CHLORDANE		2.5 UJ
DELTA-BHC		0.05 UJ
DIELDRIN		0.05 UJ
ENDOSULFAN I		0.05 UJ
ENDOSULFAN II		0.05 UJ
ENDOSULFAN SULFATE		0.05 UJ
ENDRIN		0.05 UJ
ENDRIN ALDEHYDE		0.05 UJ
GAMMA-BHC (LINDANE)		0.05 UJ
HEPTACHLOR		0.05 UJ
HEPTACHLOR EPOXIDE		0.05 UJ
TOXAPHENE		2.5 UJ
PETROLEUM HYDROCARBONS (UG/L)		
TPH (C06-C12)	230	
SEMIVOLATILES (UG/L)		
1,2,4-TRICHLOROBENZENE	2.5 U	
1,2-DIPHENYLHYDRAZINE	25 U	
2,2'-OXYBIS(1-CHLOROPROPANE)	2.5 U	
2,4,6-TRICHLOROPHENOL	2.5 U	
2,4-DICHLOROPHENOL	2.5 U	
2,4-DINITROPHENOL	50 UJ	
2,4-DINITROTOLUENE	2.5 UJ	
2,6-DINITROTOLUENE	2.5 U	
2-CHLORONAPHTHALENE	5 UJ	
2-CHLOROPHENOL	2.5 U	

TABLE 2-1

UST WATER SAMPLE DATA
SWMU 16
NSA CRANE
CRANE, INDIANA

LOCATION	**16UST01**	
SAMPLE ID	**16UST01-20110705**	**16UST01-20110826**
SAMPLE DATE	**20110715**	**20110826**
2-METHYLPHENOL	2.5 U	
2-NITROPHENOL	2.5 U	
3&4-METHYLPHENOL	42 J	
3,3'-DICHLOROBENZIDINE	50 U	
4,6-DINITRO-2-METHYLPHENOL	12 UJ	
4-BROMOPHENYL PHENYL ETHER	12 U	
4-CHLOROPHENOL	12 UR	
4-CHLOROPHENYL PHENYL ETHER	2.5 U	
4-NITROPHENOL	50 UJ	
ACENAPHTHENE	2.5 U	
ACENAPHTHYLENE	2.5 U	
ANTHRACENE	2.5 U	
BENZIDINE	50 UR	
BENZO(A)ANTHRACENE	2.5 U	
BENZO(A)PYRENE	2.5 U	
BENZO(B)FLUORANTHENE	2.5 U	
BENZO(G,H,I)PERYLENE	2.5 U	
BENZO(K)FLUORANTHENE	2.5 U	
BIS(2-CHLOROETHOXY)METHANE	2.5 U	
BIS(2-CHLOROETHYL)ETHER	2.5 U	
BIS(2-ETHYLHEXYL)PHTHALATE	2.5 U	
BUTYL BENZYL PHTHALATE	2.5 U	
CHRYSENE	2.5 U	
DIBENZO(A,H)ANTHRACENE	2.5 U	
DIETHYL PHTHALATE	2.5 U	
DIMETHYL PHTHALATE	2.5 U	
DI-N-BUTYL PHTHALATE	2.5 U	
DI-N-OCTYL PHTHALATE	2.5 U	
FLUORANTHENE	2.5 U	
FLUORENE	2.5 U	
HEXACHLOROBENZENE	2.5 U	
HEXACHLOROBUTADIENE	2.5 U	
HEXACHLOROCYCLOPENTADIENE	12 UJ	
HEXACHLOROETHANE	2.5 U	
INDENO(1,2,3-CD)PYRENE	2.5 U	
ISOPHORONE	5 UJ	
NITROBENZENE	2.5 U	
N-NITROSODIMETHYLAMINE	2.5 U	
N-NITROSO-DI-N-PROPYLAMINE	2.5 U	
N-NITROSODIPHENYLAMINE	2.5 U	
PENTACHLOROPHENOL	12 UJ	
PHENANTHRENE	2.5 U	
PHENOL	11 J	
PYRENE	2.5 U	
VOLATILES (UG/L)		
1,1,1-TRICHLOROETHANE	0.6 U	
1,1,2,2-TETRACHLOROETHANE	0.6 U	
1,1,2-TRICHLOROETHANE	0.6 U	
1,1-DICHLOROETHANE	0.6 U	
1,2-DICHLOROBENZENE	0.6 U	
1,2-DICHLOROETHANE	0.6 U	
1,2-DICHLOROPROPANE	0.6 U	
1,3-DICHLOROBENZENE	0.6 U	
1,4-DICHLOROBENZENE	0.6 U	

TABLE 2-1

UST WATER SAMPLE DATA
SWMU 16
NSA CRANE
CRANE, INDIANA

LOCATION	**16UST01**	
SAMPLE ID	**16UST01-20110705**	**16UST01-20110826**
SAMPLE DATE	**20110715**	**20110826**
2-CHLOROETHYL VINYL ETHER	0.6 UR	
ACROLEIN	0.6 U	
ACRYLONITRILE	0.6 U	
BENZENE	0.6 U	
BROMODICHLOROMETHANE	0.6 U	
BROMOFORM	0.6 U	
BROMOMETHANE	0.6 UJ	
CARBON TETRACHLORIDE	0.6 U	
CHLOROBENZENE	0.6 U	
CHLORODIBROMOMETHANE	0.6 U	
CHLOROETHANE	1 U	
CHLOROFORM	0.6 U	
CHLOROMETHANE	0.6 U	
CIS-1,3-DICHLOROPROPENE	0.6 U	
ETHYLBENZENE	12	
METHYLENE CHLORIDE	0.6 U	
NAPHTHALENE	0.6 U	
TETRACHLOROETHENE	0.6 U	
TOLUENE	0.54 J	
TRANS-1,3-DICHLOROPROPENE	0.6 U	
TRICHLOROETHENE	0.6 U	
VINYL CHLORIDE	0.6 U	

Notes:
J - estimated concentration
U - not detected
R - rejected

TABLE 2-2

UST SOIL SAMPLE SCREENING
SWMU 16
NSA CRANE
CRANE, INDIANA

LOCATION SAMPLE ID SAMPLE DATE	SWMU 16 PSL	16SB191 16SB1910206 8/23/2011	16SB191 16SB1910608 8/23/2011	16SB191 16SS1910002 8/23/2011	16SB192 16SB1920206 8/23/2011	16SB192 16SB1920709 8/23/2011	16SB192 16SS1920002 8/23/2011
METALS (MG/KG)							
LEAD	163	20	9.8	57	14	12	32
VOLATILES (UG/KG)							
2-BUTANONE	30000	2.12 J	1.38 U	3.55 J	5.52	1.75 J	1.53 J
2-HEXANONE	220	1.53 U	1.38 U	2.17 U	2.7 U	1.46 U	2.53 U
ACETONE	90000	9.63	2.27 J	19	41.5	12.3	14.2
ACROLEIN	0.2	1.58 U	1.42 U	2.24 U	2.79 U	1.51 U	2.61 U
BENZENE	52	0.285 J	0.276 U	0.246 J	0.539 U	0.292 U	0.506 U
BROMOMETHANE	44	0.306 U	0.276 U	0.434 U	0.539 U	0.292 U	0.506 U
CARBON DISULFIDE	6200	1.27 U	1.15 U	1.98 J	2.25 U	1.22 U	2.11 U
CHLOROMETHANE	980	0.306 U	0.276 U	0.434 U	0.539 U	0.292 U	0.506 U
CIS-1,2-DICHLOROETHENE	420	0.306 U	0.276 U	0.434 U	0.539 U	0.292 U	0.506 U
CYCLOHEXANE	330000	0.235 J	0.276 U	0.934	0.539 U	0.292 U	0.506 U
ETHYLBENZENE	15600	0.556	0.276 U	0.434 U	0.539 U	0.292 U	0.506 U
ISOPROPYLBENZENE	11000	0.382 J	0.276 U	0.434 U	0.539 U	0.292 U	0.506 U
METHYL ACETATE	150000	2 J	1.53 U	2.4 U	3.15 J	1.62 U	1.53 J
TOLUENE	13800	0.831	0.276 U	0.68 J	0.539 U	0.292 U	0.506 U
TOTAL XYLENES	196000	2.88	0.276 U	0.326 J	0.539 U	0.292 U	0.506 U
VINYL CHLORIDE	14	0.306 U	0.276 U	0.434 U	0.539 U	0.292 U	0.506 U
PETROLEUM HYDROCARBONS (MG/KG)							
DRO (C08-C28)	230	8.3	2.1 J	5.8	5.7	3 J	2.4 J
GRO (C06-C12)	120	1.2 UJ	1.2 UJ	1.2 UJ	1.2 UJ	1.2 UJ	1.1 UJ

TABLE 2-2

UST SOIL SAMPLE SCREENING
SWMU 16
NSA CRANE
CRANE, INDIANA

LOCATION **SAMPLE ID** **SAMPLE DATE**	**SWMU 16 PSL**	**16SB193** **16SB1930206** **8/23/2011**	**16SB193** **16SB1930608** **8/23/2011**	**16SB193** **16SS1930002** **8/23/2011**	**16SB194** **16SB1940206** **8/23/2011**	**16SB194** **16SB1940810** **8/23/2011**	**16SB194** **16SS1940002** **8/23/2011**
METALS (MG/KG)							
LEAD	163	13	10	17	15	13	27
VOLATILES (UG/KG)							
2-BUTANONE	30000	1.67 J	1.39 J	4.03 J	1.14 J	2.89	1.97 J
2-HEXANONE	220	1.66 U	2.47 U	2.61 U	1.6 U	1.49 U	1.37 U
ACETONE	90000	6.86	9.44	36.7	7.91	18.2	19.5
ACROLEIN	0.2	1.71 U	2.55 U	2.7 U	1.65 U	1.54 U	1.42 U
BENZENE	52	0.332 U	0.494 U	0.522 U	0.319 U	0.298 U	0.275 U
BROMOMETHANE	44	0.332 U	0.494 U	0.522 U	0.319 U	0.298 U	0.275 U
CARBON DISULFIDE	6200	1.38 U	2.06 U	2.18 U	1.04 J	1.24 U	1.15 U
CHLOROMETHANE	980	0.332 U	0.494 U	0.522 U	0.319 U	0.298 U	0.275 U
CIS-1,2-DICHLOROETHENE	420	0.68	0.536 J	0.522 U	0.319 U	0.432 J	0.275 U
CYCLOHEXANE	330000	0.332 U	0.494 U	0.522 U	0.319 U	0.298 U	0.275 U
ETHYLBENZENE	15600	0.332 U	0.494 U	0.522 U	0.319 U	0.298 U	0.275 U
ISOPROPYLBENZENE	11000	0.332 U	0.494 U	0.522 U	0.319 U	0.298 U	0.275 U
METHYL ACETATE	150000	1.84 U	2.74 U	1.85 J	1.77 U	1.65 U	1.39 J
TOLUENE	13800	1.65	0.494 U	0.522 U	0.208 J	0.288 J	0.275 U
TOTAL XYLENES	196000	0.332 U	0.494 U	0.522 U	0.319 U	0.298 U	0.275 U
VINYL CHLORIDE	14	1.56	1.29	0.522 U	0.319 U	0.298 U	0.275 U
PETROLEUM HYDROCARBONS (MG/KG)							
DRO (C08-C28)	230	3.2 J	3 J	2.3 J	4.5	2.5 J	12 J
GRO (C06-C12)	120	1.2 UJ	1.2 UJ	1.2 UJ	1.3 UJ	1.2 UJ	1.1 UJ

TABLE 2-2

UST SOIL SAMPLE SCREENING
SWMU 16
NSA CRANE
CRANE, INDIANA

LOCATION **SAMPLE ID** **SAMPLE DATE**	**SWMU 16 PSL**	**16SB195** **16SB1950206** **8/23/2011**	**16SB195** **16SB1950709** **8/23/2011**	**16SB195** **16SS1950002** **8/23/2011**	**16SB196** **16SB1960206** **8/23/2011**	**16SB196** **16SB1960206-D** **8/23/2011**	**16SB196** **16SB1961012** **8/23/2011**
METALS (MG/KG)							
LEAD	163	15	13	26	22	22	9.5
VOLATILES (UG/KG)							
2-BUTANONE	30000	6.55	1.44 J	2.43 J	1.63 U	2.77	0.758 J
2-HEXANONE	220	2.63 U	2.25 U	1.87 U	1.63 U	1.53 U	1.46 U
ACETONE	90000	27.3	10.3	20.5	2.57 J	18.8 J	6.4
ACROLEIN	0.2	2.72 U	2.32 U	1.94 U	1.68 U	1.58 U	1.51 U
BENZENE	52	1.8	0.449 U	0.375 U	0.325 U	0.306 U	0.291 U
BROMOMETHANE	44	0.526 U	0.449 U	0.375 U	0.325 U	0.306 U	0.291 U
CARBON DISULFIDE	6200	2.19 U	1.87 U	1.56 U	1.36 U	1.27 U	0.656 J
CHLOROMETHANE	980	0.526 U	0.449 U	0.375 U	0.325 U	0.306 U	0.291 U
CIS-1,2-DICHLOROETHENE	420	0.526 U	0.449 U	0.375 U	0.325 U	0.306 U	0.291 U
CYCLOHEXANE	330000	0.526 U	0.449 U	0.375 U	0.325 U	0.306 U	0.291 U
ETHYLBENZENE	15600	14.4	0.449 U	0.375 U	0.325 U	0.306 U	0.291 U
ISOPROPYLBENZENE	11000	15.4	0.449 U	0.375 U	0.325 U	0.306 U	0.291 U
METHYL ACETATE	150000	2.91 U	2.49 U	2.07 U	1.8 U	1.69 U	1.61 U
TOLUENE	13800	7.32	0.449 U	0.219 J	0.325 U	0.239 J	0.291 U
TOTAL XYLENES	196000	89.7	0.449 U	0.375 U	0.325 U	0.306 U	0.291 U
VINYL CHLORIDE	14	0.526 U	0.449 U	0.375 U	0.325 U	0.306 U	0.291 U
PETROLEUM HYDROCARBONS (MG/KG)							
DRO (C08-C28)	230	5.8	3.7	2.9 J	3.2 J	0.75 J	2.7 J
GRO (C06-C12)	120	19 J	1.2 UR	1.1 UJ	1.2 UJ	1.2 UR	1.2 UJ

TABLE 2-2

UST SOIL SAMPLE SCREENING
SWMU 16
NSA CRANE
CRANE, INDIANA

LOCATION **SAMPLE ID** **SAMPLE DATE**	**SWMU 16 PSL**	**16SB196** **16SS1960002** **8/23/2011**	**16SB197** **16SB1970206** **8/23/2011**	**16SB197** **16SB1970607** **8/23/2011**	**16SB197** **16SS1970002** **8/23/2011**	**16SB198** **16SB1980206** **8/23/2011**
METALS (MG/KG)						
LEAD	163	45	17	11	35	18
VOLATILES (UG/KG)						
2-BUTANONE	30000	4.73	4.95	2.73 U	7.38	6.45
2-HEXANONE	220	1.51 U	2.62 U	2.73 U	1.6 U	2.69 U
ACETONE	90000	32.4	26.1	7.76	56.8	72.8
ACROLEIN	0.2	1.56 U	2.71 UJ	2.82 U	1.65 U	2.78 U
BENZENE	52	0.443 J	0.524 UJ	0.546 U	0.32 U	0.538 U
BROMOMETHANE	44	0.302 U	0.524 U	0.546 U	0.32 U	0.538 U
CARBON DISULFIDE	6200	1.19 J	2.18 U	2.27 U	1.33 U	2.24 U
CHLOROMETHANE	980	0.72	0.524 U	0.546 U	0.32 U	0.538 U
CIS-1,2-DICHLOROETHENE	420	0.302 U	0.524 U	0.546 U	0.32 U	0.538 U
CYCLOHEXANE	330000	0.302 U	0.524 U	0.546 U	0.32 U	0.538 U
ETHYLBENZENE	15600	0.297 J	0.524 UJ	0.546 U	0.32 U	0.538 U
ISOPROPYLBENZENE	11000	0.302 U	0.524 U	0.546 U	0.32 U	0.538 U
METHYL ACETATE	150000	1.67 U	2.32 J	3.02 U	4.26	4.12 J
TOLUENE	13800	1.02	0.9 J	0.546 U	0.32 U	0.538 U
TOTAL XYLENES	196000	0.675	0.524 U	0.546 U	0.32 U	0.538 U
VINYL CHLORIDE	14	0.302 U	2.37 J	2.24	0.32 U	0.538 U
PETROLEUM HYDROCARBONS (MG/KG)						
DRO (C08-C28)	230	3.4 J	3 J	0.95 J	2 J	1.1 J
GRO (C06-C12)	120	1.2 UJ	1.2 UJ	1.2 UJ	1.2 UJ	1.2 UJ

TABLE 2-2

UST SOIL SAMPLE SCREENING
SWMU 16
NSA CRANE
CRANE, INDIANA

LOCATION **SAMPLE ID** **SAMPLE DATE**	**SWMU 16 PSL**	**16SB198** **16SB1980607** **8/23/2011**	**16SB198** **16SS1980002** **8/23/2011**	**16SB198** **16SS1980002-D** **8/23/2011**
METALS (MG/KG)				
LEAD	163	12	67 J	130 J
VOLATILES (UG/KG)				
2-BUTANONE	30000	3.04 J	18.7 J	54.9 J
2-HEXANONE	220	2.54 U	2.47 U	1.97 J
ACETONE	90000	21.2	90.3 J	298 J
ACROLEIN	0.2	2.63 U	2.55 UJ	9.78 J
BENZENE	52	0.509 U	0.494 UJ	1.54 J
BROMOMETHANE	44	0.509 U	0.494 U	0.27 J
CARBON DISULFIDE	6200	2.12 U	2.06 U	2.18 U
CHLOROMETHANE	980	0.509 U	0.494 U	0.522 U
CIS-1,2-DICHLOROETHENE	420	0.509 U	0.494 U	0.522 U
CYCLOHEXANE	330000	0.509 U	0.494 U	0.522 U
ETHYLBENZENE	15600	0.509 U	0.494 U	0.522 U
ISOPROPYLBENZENE	11000	0.509 U	0.494 U	0.522 U
METHYL ACETATE	150000	2.81 U	17.2	17
TOLUENE	13800	0.509 U	0.478 J	0.383 J
TOTAL XYLENES	196000	0.509 U	0.494 U	0.522 U
VINYL CHLORIDE	14	0.509 U	0.494 U	0.522 U
PETROLEUM HYDROCARBONS (MG/KG)				
DRO (C08-C28)	230	1.4 J	1.7 J	1.4 J
GRO (C06-C12)	120	1.2 UJ	1.1 UJ	1.1 UR

Notes:
Shaded cells indicate the chemical concentration exceeds the PSL, established in the SAP.
J - estimated value
PSL - project screening limit
U - concentration is below the laboratory detection limit

TABLE 2-3

TCE CONTAMINATION AREA SOIL SAMPLE SCREENING
SWMU 16
NSA CRANE
CRANE, INDIANA

Location	Sample ID	Sample Date	1,1,2-TRICHLOROETHANE	CIS-1,2-DICHLOROETHENE	TRANS-1,2-DICHLOROETHENE	TRICHLOROETHENE	VINYL CHLORIDE	CARBON TETRACHLORIDE	TETRACHLOROETHENE
		SWMU 16 MCS	**32**	**420**	**580**	**36**	**14**	**38**	**46**
16SB001	16SS0010002	03/27/2003	1 U	1 U	1 U	1 U	1 U	1 U	1 U
16SB001	16SB0010406	03/27/2003	1.2 U	1.2 U	1.2 U	1.2 U	1.2 U	1.2 U	1.2 U
16SB002	16SS0020002	03/27/2003	1.1 U	1.1 U	1 J	1.1 U	1.1 U	1.1 U	1.1 U
16SB002	16SB0020406	03/27/2003	1.1 U	1.1 U	1.1 U	1.1 U	1.1 U	1.1 U	1.1 U
16SB003	16SS0030002	03/27/2003	1.1 U	1.1 U	2 J	1.1 U	1.1 U	1.1 U	1.1 U
16SB004	16SS0040002	03/27/2003	1.2 U	1.2 U	1 J	1.2 U	1.2 U	1.2 U	1.2 U
16SB005	16SS0050002	03/27/2003	1.2 U	1.2 U	1.2 U	1.2 U	1.2 U	1.2 U	1.2 U
16SB006	16SS0060002	03/27/2003	1.2 U	1.2 U	1.2 U	1.2 U	1.2 U	1.2 U	1.2 U
16SB034	16SS0340002	04/09/2003	1.1 U	1.1 U	1.1 U	1.1 U	1.1 U	1.1 U	1.1 U
16SB035	16SS0350002	03/28/2003	1.1 U	1.1 U	1.1 U	1.1 U	1.1 U	1.1 U	1.1 U
16SB036	16SS0360002	04/09/2003	1.2 U	1.2 U	1.2 U	1.2 U	1.2 U	1.2 U	1.2 U
16SB036	16SB0360203	04/09/2003	1.2 U	1.2 U	1.2 U	1.2 U	1.2 U	1.2 U	1.2 U
16SB037	16SS0370002	03/28/2003	1.1 U	1.1 U	1.1 U	1.1 U	1.1 U	1.1 U	1.1 U
16SB038	16SS0380002	03/28/2003	1.1 U	1.1 U	1.1 U	6	1.1 U	1.1 U	1.1 U
16SB038	16SB0380203	03/28/2003	1.1 U	1.1 U	1.1 U	4	1.1 U	1.1 U	1.1 U
16SB039	16SS0390002	03/28/2003	1.2 U	23	2 J	**86**	1.2 U	1.2 U	1.2 U
16SB039	16SB0390203	03/28/2003	1.2 U	200	12	**280**	1.2 U	1.2 U	1.2 U
16SB040	16SB0400506	03/28/2003	1.2 U	1.2 U	1.2 U	1.2 U	1.2 U	1.2 U	1.2 U
16SB040	16SB0400608	03/28/2003	1.2 U	1.2 U	1.2 U	1.2 U	1.2 U	1.2 U	1.2 U
16SB041	16SB0410305	03/27/2003	1.2 U	1.2 U	1.2 U	1.2 U	1.2 U	1.2 U	1.2 U
16SB041	16SB0410507	03/27/2003	1.2 U	1.2 U	1.2 U	1.2 U	1.2 U	1.2 U	1.2 U
16SB047	16SB0470405	12/05/2003	1.18 U	22	1.18 U	**61**	1.18 U	1.18 U	1.18 U
16SB048	16SB0480203	12/05/2003	1.12 U	1.12 U	1.12 U	**97 J**	1.12 U	1.12 U	1.12 U
16SB049	16SB0490405	12/05/2003	0.81 U	0.814 U	0.814 U	**37**	0.814 U	0.814 U	0.814 U
16SB050	16SB0500103	12/05/2003	0.98 U	0.978 U	1 J	**190 J**	0.978 U	0.978 U	0.978 U
16SB051	16SS0510102	08/13/2004	1.09 U	1.09 U	1.09 U	1.09 U	1.09 U	1.09 U	1.09 U
16SB051	16SB0510204	08/13/2004	1.17 U	1.17 U	1.17 U	1.17 U	1.17 U	1.17 U	1.17 U
16SB052	16SS0520102	08/12/2004	0.93 U	0.933 U	0.933 U	8	0.933 U	0.933 U	0.933 U
16SB052	16SB0520205	08/12/2004	1.05 U	1.05 U	1.05 U	14	1.05 U	1.05 U	1.05 U
16SB053	16SS0530102	08/12/2004	0.89 U	0.888 U	0.888 U	**61**	0.888 U	0.888 U	0.888 U
16SB053	16SB0530205	08/12/2004	1.01 U	1.01 U	1.01 U	**1300**	1.01 U	1.01 U	1.01 U
16SB054	16SS0540102	08/13/2004	1.05 U	1.05 U	1.05 U	**67**	1.05 U	1.05 U	1.05 U
16SB054	16SB0540205	08/13/2004	1.3 U	1.3 U	1.3 U	**210**	1.3 U	1.3 U	1.3 U
16SB055	16SS0550102	08/12/2004	0.93 U	0.93 U	0.93 U	**64**	0.93 U	0.93 U	0.93 U
16SB055	16SB0550206	08/12/2004	1.07 U	1.07 U	1.07 U	**79**	1.07 U	1.07 U	1.07 U
16SB055	16SB0550607	08/12/2004	0.95 U	0.946 U	0.946 U	2 J	0.946 U	0.946 U	0.946 U
16SB056	16SS0560102	08/12/2004	1.02 U	1.02 U	1.02 U	34	1.02 U	1.02 U	1.02 U
16SB056	16SB0560206	08/12/2004	8 J	1.05 UR	1.05 UR	**930 J**	1.05 U	1.05 UR	1.05 UR
16SB056	16SB0560608	08/12/2004	4	1.13 U	1.13 U	**200**	1.13 U	1.13 U	1.13 U
16SB057	16SS0570102	08/13/2004	0.99 U	0.993 U	0.993 U	0.993 U	0.993 U	0.993 U	0.993 U
16SB057	16SB0570206	08/13/2004	1.04 U	1.04 U	1.04 U	1.04 U	1.04 U	1.04 U	1.04 U
16SB058	16SS0580102	08/13/2004	0.95 U	0.945 U	0.945 U	0.945 U	0.945 U	0.945 U	0.945 U

TABLE 2-3

TCE CONTAMINATION AREA SOIL SAMPLE SCREENING
SWMU 16
NSA CRANE
CRANE, INDIANA

Location	Sample ID	Sample Date	1,1,2-TRICHLOROETHANE	CIS-1,2-DICHLOROETHENE	TRANS-1,2-DICHLOROETHENE	TRICHLOROETHENE	VINYL CHLORIDE	CARBON TETRACHLORIDE	TETRACHLOROETHENE
		SWMU 16 MCS	**32**	**420**	**580**	**36**	**14**	**38**	**46**
16SB058	16SB0580206	08/13/2004	1.06 U	1.06 U	1.06 U	18	1.06 U	1.06 U	1.06 U
16SB058	16SB0580607	08/13/2004	1.03 U	1.03 U	1.03 U	28	1.03 U	1.03 U	1.03 U
16SB059	16SS0590102	08/13/2004	1.01 U	1.01 U	1.01 U	13	1.01 U	1.01 U	1.01 U
16SB059	16SB0590206	08/13/2004	1.22 U	1.22 U	1.22 U	**190**	1.22 U	1.22 U	1.22 U
16SB059	16SB0590608	08/13/2004	0.99 U	0.988 U	0.988 U	9	0.988 U	0.988 U	0.988 U
16SB060	16SS0600102	08/11/2004	1.14 U	17	1.14 U	9	1.14 U	1.14 U	1.14 U
16SB060	16SB0600206	08/11/2004	1.04 UJ	8 J	1.04 UJ	28 J	1.04 UJ	1.04 UJ	1.04 UJ
16SB060	16SB0600609	08/11/2004	1.02 U	4	1.02 U	1.02 U	1.02 U	1.02 U	1.02 U
16SB061	16SS0610102	08/11/2004	1.19 U	1.1 J	1.19 U	3 J	1.19 U	1.19 U	1.19 U
16SB061	16SB0610206	08/11/2004	1.09 U	86	5	**160**	1.09 U	1.09 U	1.09 U
16SB061	16SB0610607	08/11/2004	1.2 U	11	1.2 U	14	1.2 U	1.2 U	1.2 U
16SB062	16SS0620102	08/13/2004	1 U	1 U	1 U	1 U	1 U	1 U	1 U
16SB062	16SB0620206	08/13/2004	1.01 U	1.01 U	1.01 U	5	1.01 U	1.01 U	1.01 U
16SB062	16SB0620607	08/13/2004	0.97 U	0.968 U	0.968 U	6	0.968 U	0.968 U	0.968 U
16SB063	16SS0630102	08/11/2004	1.01 U	1.01 U	1.01 U	1.01 U	1.01 U	1.01 U	1.01 U
16SB063	16SB0630206	08/11/2004	1.19 U	1.19 U	1.19 U	1.19 U	1.19 U	1.19 U	1.19 U
16SB063	16SB0630608	08/11/2004	1.3 U	1.3 U	1.3 U	1.3 U	1.3 U	1.3 U	1.3 U
16SB064	16SS0640102	08/11/2004	1.05 U	1.05 U	1.05 U	1.05 U	1.05 U	1.05 U	1.05 U
16SB064	16SB0640206	08/11/2004	1.09 U	1.09 U	1.09 U	1.09 U	1.09 U	1.09 U	1.09 U
16SB064	16SB0640608	08/11/2004	1.24 U	1.24 U	1.24 U	1.24 U	1.24 U	1.24 U	1.24 U
16SB065	16SS0650102	08/11/2004	1.17 U	1.17 U	1.17 U	1.17 U	1.17 U	1.17 U	1.17 U
16SB065	16SB0650206	08/11/2004	1.27 U	24	3 J	3 J	12	1.27 U	1.27 U
16SB065	16SB0650608	08/11/2004	1.45 U	27	4 J	17	6	1.45 U	1.45 U
16SB066	16SS0660102	08/12/2004	1.26 U	73	1.26 J	34	1.26 U	1.26 U	1.26 U
16SB066	16SB0660206	08/12/2004	1.23 U	23	1.23 U	9	1.23 U	1.23 U	1.23 U
16SB066	16SB0660608	08/12/2004	0.92 U	1 J	0.92 U	0.92 U	0.92 U	0.92 U	0.92 U
16SB067	16SS0670102	08/12/2004	1.19 U	3 J	1.19 U	3 J	1.19 U	1.19 U	1.19 U
16SB067	16SB0670206	08/12/2004	1.09 U	1.09 U	1.09 U	2 J	1.09 U	1.09 U	1.09 U
16SB067	16SB0670609	08/12/2004	1.21 U	1.21 U	1.21 U	2 J	1.21 U	1.21 U	1.21 U
16SB068	16SS0680102	08/12/2004	0.96 U	5	0.963 U	0.963 U	0.963 U	0.963 U	0.963 U
16SB068	16SB0680206	08/12/2004	1.02 U	7 J	1.02 U	1.02 U	1.02 U	1.02 U	1.02 U
16SB068	16SB0680609	08/12/2004	1.12 U	5	1.12 U	1.12 U	1.12 U	1.12 U	1.12 U
16SB069	16SS0690102	08/12/2004	1 U	0.995 U	0.995 U	0.995 U	0.995 U	0.995 U	0.995 U
16SB069	16SB0690206	08/12/2004	1.05 U	1.05 U	1.05 U	1.05 U	1.05 U	1.05 U	1.05 U
16SB069	16SB0690607	08/12/2004	1.35 U	1.35 U	1.35 U	1.35 U	1.35 U	1.35 U	1.35 U
16SB070	16SS0700102	08/12/2004	0.92 U	0.923 U	0.923 U	0.923 U	0.923 U	0.923 U	0.923 U
16SB070	16SB0700206	08/12/2004	1.2 U	1.2 U	1.2 U	1.2 U	1.2 U	1.2 U	1.2 U
16SB070	16SB0700607	08/12/2004	0.98 U	2 J	0.978 U	10	0.978 U	0.978 U	0.978 U
16SB071	16SS0710102	08/12/2004	0.94 UJ	0.943 UJ	0.943 UJ	0.943 UJ	0.943 UJ	0.943 UJ	0.943 UJ
16SB071	16SB0710206	08/12/2004	1.16 U	1.16 U	1.16 U	1.16 U	1.16 U	1.16 U	1.16 U
16SB072	16SS0720102	08/12/2004	0.93 U	13	0.933 U	2 J	0.933 U	0.933 U	0.933 U
16SB072	16SB0720206	08/12/2004	0.99 U	32	0.986 U	5	0.986 U	0.986 U	0.986 U

TABLE 2-3

TCE CONTAMINATION AREA SOIL SAMPLE SCREENING
SWMU 16
NSA CRANE
CRANE, INDIANA

Location	Sample ID	Sample Date	1,1,2-TRICHLOROETHANE	CIS-1,2-DICHLOROETHENE	TRANS-1,2-DICHLOROETHENE	TRICHLOROETHENE	VINYL CHLORIDE	CARBON TETRACHLORIDE	TETRACHLOROETHENE
		SWMU 16 MCS	**32**	**420**	**580**	**36**	**14**	**38**	**46**
16SB072	16SB0720607	08/12/2004	1.22 U	53	1.22 U	11	1.22 U	1.22 U	1.22 U
16SB073	16SS0730102	08/12/2004	1 U	3 J	1 U	1 U	1 U	1 U	1 U
16SB073	16SB0730204	08/12/2004	1.03 U	5	1.03 U	1.03 U	1.03 U	1.03 U	1.03 U
16SB074	16SS0740102	08/17/2004	0.94 U	0.938 U	0.938 U	0.938 U	0.938 U	0.938 U	0.938 U
16SB074	16SB0740206	08/17/2004	1.04 U	1.04 U	1.04 U	1.04 U	1.04 U	1.04 U	1.04 U
16SB075	16SS0750102	08/12/2004	0.97 U	0.967 U	0.967 U	0.967 U	0.967 U	0.967 U	0.967 U
16SB075	16SB0750203	08/12/2004	0.98 U	0.975 U	0.975 U	0.975 U	0.975 U	0.975 U	0.975 U
16SB076	16SS0760102	08/12/2004	0.95 U	0.953 U	0.953 U	0.953 U	0.953 U	0.953 U	0.953 U
16SB076	16SB0760206	08/12/2004	0.93 U	0.929 U	0.929 U	0.929 U	0.929 U	0.929 U	0.929 U
16SB076	16SB0760607	08/12/2004	1.12 U	1.12 U	1.12 U	1.12 U	1.12 U	1.12 U	1.12 U
16SB077	16SS0770102	08/12/2004	0.89 U	0.893 U	0.893 U	0.893 U	0.893 U	0.893 U	0.893 U
16SB077	16SB0770206	08/12/2004	0.99 U	0.988 U	0.988 U	0.988 U	0.988 U	0.988 U	0.988 U
16SB077	16SB0770610	08/12/2004	0.92 U	0.92 U	0.92 U	1 J	0.92 U	0.92 U	0.92 U
16SB078	16SS0780102	08/12/2004	1.02 U	1.02 U	1.02 U	1.02 U	1.02 U	1.02 U	1.02 U
16SB078	16SB0780206	08/12/2004	1.01 U	1.01 U	1.01 U	1.01 U	1.01 U	1.01 U	1.01 U
16SB078	16SB0780609	08/12/2004	1.04 UJ	1.04 UJ	1.04 UJ	1.04 UJ	1.04 UJ	1.04 UJ	1.04 UJ
16SB090	16SB0900406	08/16/2004	0.96 U	0.955 U	0.955 U	**220 J**	0.955 U	0.955 U	0.955 U
16SB090	16SB0900608	08/16/2004	1.17 U	1.17 J	1.17 U	**220 J**	1.17 U	1.17 U	1.17 U
16SB091	16SB0910406	08/16/2004	0.94 U	1 J	0.944 U	**390 J**	0.944 U	0.944 U	0.944 U
16SB091	16SB0910609	08/16/2004	0.97 U	3 J	0.974 U	**980**	0.974 U	0.974 U	0.974 U
16SB092	16SB0920406	08/16/2004	0.93 U	0.932 U	0.932 U	32	0.932 U	0.932 U	0.932 U
16SB092	16SB0920608	08/16/2004	0.87 U	0.869 U	0.869 U	28	0.869 U	0.869 U	0.869 U
16SB093	16SB0930406	08/16/2004	0.95 U	0.95 U	0.95 U	**250 J**	0.95 U	0.95 U	0.95 U
16SB093	16SB0930608	08/16/2004	1.05 U	1.05 U	1.05 U	**360**	1.05 U	1.05 U	1.05 U
16SB094	16SB0940708	08/16/2004	1.48 U	1.48 U	1.48 U	20	1.48 U	1.48 U	1.48 U
16SB095	16SB0950406	08/16/2004	1.01 U	1.01 U	1.01 U	**9000**	1.01 U	1.01 U	1.01 U
16SB095	16SB0950607	08/16/2004	1.05 U	1.05 U	1.05 U	**2000**	1.05 U	1.05 U	1.05 U
16SB096	16SB0960406	08/16/2004	0.97 U	0.966 U	0.966 U	**120 J**	0.966 U	0.966 U	0.966 U
16SB096	16SB0960608	08/16/2004	1.06 U	1.06 U	1.06 U	11	1.06 U	1.06 U	1.06 U
16SB097	16SB0970406	08/16/2004	0.96 U	0.957 U	0.957 U	**1200**	0.957 U	0.957 U	0.957 U
16SB097	16SB0970607	08/16/2004	1.09 U	1.09 U	1.09 U	**88 J**	1.09 U	1.09 U	1.09 U
16SB098	16SS0980102	08/16/2004	1.24 U	1.24 U	1.24 U	**170**	1.24 U	1.24 U	1.24 U
16SB098	16SB0980206	08/16/2004	0.92 U	0.922 U	0.922 U	**140**	0.922 U	0.922 U	0.922 U
16SB098	16SB0980607	08/16/2004	0.93 U	0.929 U	0.929 U	**200 J**	0.929 U	0.929 U	0.929 U
16SB099	16SS0990102	08/16/2004	0.98 U	0.98 U	0.98 U	**103 J**	0.98 U	0.98 U	0.98 U
16SB099	16SB0990206	08/16/2004	1.11 U	1.11 U	1.11 U	**630**	1.11 U	1.11 U	1.11 U
16SB099	16SB0990608	08/16/2004	1.06 U	1.06 U	1.06 U	**160**	1.06 U	1.06 U	1.06 U
16SB118	16SB1180206	08/24/2011	0.54 U	16.4	0.308 J	4.03	0.544 U	--	--
16SB118	16SB1180607	08/24/2011	0.53 U	34.1	0.55 J	16.1	0.31 J	--	--
16SB119	16SB1190406	08/24/2011	0.53 U	35.9	1.1	4.02	0.823 J	--	--
16SB119	16SB1190608	08/24/2011	0.3 U	0.525	0.303 U	0.333 U	0.303 U	--	--
16SB120	16SB1200406	08/24/2011	0.33 U	7.31 J	0.344 J	5.6	0.333 U	--	--

TABLE 2-3

TCE CONTAMINATION AREA SOIL SAMPLE SCREENING
SWMU 16
NSA CRANE
CRANE, INDIANA

Location	Sample ID	Sample Date	1,1,2-TRICHLOROETHANE	CIS-1,2-DICHLOROETHENE	TRANS-1,2-DICHLOROETHENE	TRICHLOROETHENE	VINYL CHLORIDE	CARBON TETRACHLORIDE	TETRACHLOROETHENE
		SWMU 16 MCS	**32**	**420**	**580**	**36**	**14**	**38**	**46**
16SB120	16SB1200608	08/24/2011	0.31 U	17.6 J	0.368 J	2.13 J	0.311 U	--	--
16SB121	16SB1210306	08/24/2011	0.3 U	2.77	0.3 U	0.904	0.3 U	--	--
16SB121	16SB1210607	08/24/2011	0.53 U	1.91	0.532 U	1.06	0.532 U	--	--
16SB122	16SB1220406	08/24/2011	0.31 U	2.78	0.312 U	1.9	0.312 U	--	--
16SB122	16SB1220910	08/24/2011	0.55 U	11.2	0.548 U	4.39	0.548 U	--	--
16SB123	16SB1230306	08/24/2011	--	120	13	**190**	2	--	--
16SB123	16SB1230608	08/24/2011	--	63	7	**150**	1	--	--
16SB124	16SB1240306	08/24/2011	--	20	0.57 J	**110**	0.63 U	--	--
16SB124	16SB1240911	08/24/2011	--	12	0.56 U	**63**	0.56 U	--	--
16SB125	16SB1250306	08/24/2011	--	41	1	**95**	0.59 U	--	--
16SB125	16SB1250607	08/24/2011	--	23	0.67 J	**57**	0.56 U	--	--
16SB126	16SS1260002	08/24/2011	--	0.51 U	0.51 U	0.51 U	0.51 U	--	--
16SB126	16SB1260205	08/24/2011	--	0.6 U	0.6 U	0.6 U	0.6 U	--	--
16SB127	16SS1270002	08/24/2011	--	0.51 U	0.51 U	0.51 U	0.51 U	--	--
16SB127	16SB1270206	08/24/2011	--	0.54 U	0.54 U	**44**	0.54 U	--	--
16SB128	16SS1280002	08/24/2011	--	0.52 U	0.52 U	0.52 U	0.52 U	--	--
16SB128	16SB1280206	08/24/2011	--	0.52 U	0.52 U	18	0.52 U	--	--
16SB128	16SB1280607	08/24/2011	--	0.57 U	0.57 U	**41**	0.57 U	--	--
16SB129	16SS1290002	08/24/2011	--	0.52 U	0.52 U	0.52 U	0.52 U	--	--
16SB129	16SB1290206	08/24/2011	--	0.52 U	0.52 U	**65**	0.52 U	--	--
16SB130	16SS1300002	08/24/2011	--	0.67 U	0.67 U	0.67 U	0.67 U	--	--
16SB130	16SB1300206	08/24/2011	--	0.52 U	0.52 U	27	0.52 U	--	--
16SB130	16SB1300607	08/24/2011	--	0.48 J	0.73 U	**160**	0.73 U	--	--
16SB131	16SS1310002	08/24/2011	--	0.72 U	0.72 U	0.72 U	0.72 U	--	--
16SB131	16SB1310206	08/24/2011	--	0.69 U	0.69 U	**37**	0.69 U	--	--
16SB132	16SS1320002	08/24/2011	0.45 U	0.45 U	0.45 U	0.495 U	0.45 U	--	--
16SB132	16SB1320206	08/24/2011	0.49 U	0.487 U	0.487 U	1.2	0.487 U	--	--
16SB132	16SB1320608	08/24/2011	0.49 U	0.493 U	0.493 U	2.99	0.493 U	--	--
16SB133	16SS1330002	08/24/2011	0.51 U	0.507 U	0.507 U	0.557 U	0.507 U	--	--
16SB133	16SB1330206	08/24/2011	0.5 U	0.502 U	0.502 U	0.561 J	0.502 U	--	--
16SB134	16SS1340002	08/24/2011	0.45 U	0.449 U	0.449 U	0.494 U	0.449 U	--	--
16SB134	16SB1340206	08/24/2011	0.48 U	0.484 U	0.484 U	**62.7**	0.484 U	--	--
16SB134	16SB1340607	08/24/2011	0.54 U	0.647 J	0.539 U	**780**	0.539 U	--	--
16SB135	16SB1350002	08/24/2011	0.49 U	0.491 U	0.491 U	3.21	0.491 U	--	--
16SB135	16SB1350206	08/24/2011	0.48 U	4.86	4.28	**96.6 J**	0.48 U	--	--
16SB136	16SS1360002	08/24/2011	0.51 U	0.511 U	0.511 U	0.681 J	0.511 U	--	--
16SB136	16SB1360206	08/24/2011	0.57 U	0.573 U	0.573 U	3.28	0.573 U	--	--
16SB136	16SB1360607	08/24/2011	0.52 U	0.523 U	0.523 U	3.28	0.523 U	--	--
16SB137	16SS1370002	08/24/2011	0.52 U	0.516 U	0.499 J	14.6	0.516 U	--	--
16SB137	16SB1370205	08/24/2011	0.52 U	0.523 U	0.523 U	0.576 UJ	0.523 U	--	--
16SB138	16SS1380002	08/24/2011	0.52 U	0.519 U	0.519 U	2.76	0.519 U	--	--
16SB138	16SB1380206	08/24/2011	0.51 J	17.7	18.9	**1280**	0.497 U	--	--

TABLE 2-3

TCE CONTAMINATION AREA SOIL SAMPLE SCREENING
SWMU 16
NSA CRANE
CRANE, INDIANA

Location	Sample ID	Sample Date	1,1,2-TRICHLOROETHANE	CIS-1,2-DICHLOROETHENE	TRANS-1,2-DICHLOROETHENE	TRICHLOROETHENE	VINYL CHLORIDE	CARBON TETRACHLORIDE	TETRACHLOROETHENE
		SWMU 16 MCS	**32**	**420**	**580**	**36**	**14**	**38**	**46**
16SB138	16SB1380608	08/24/2011	0.37 J	2.44	1.52	**462**	0.478 U	--	--
16SB139	16SS1390002	08/24/2011	0.29 U	0.287 U	0.287 U	0.315 U	0.287 U	--	--
16SB139	16SB1390206	08/24/2011	0.31 U	0.21 J	0.308 U	1.37	0.308 U	--	--
16SB140	16SS1400002	08/24/2011	0.49 U	0.492 U	0.492 U	0.541 U	0.492 U	--	--
16SB140	16SB1400206	08/24/2011	0.52 U	9.46	0.517 U	14.4	1.76	--	--
16SB141	16SS1410002	08/25/2011	0.5 U	0.5 U	0.5 U	0.55 U	0.5 U	--	--
16SB141	16SB1410206	08/25/2011	0.54 U	0.536 U	0.536 U	4.69	0.536 U	--	--
16SB141	16SB1410709	08/25/2011	0.33 U	0.33 U	0.33 U	3.3	0.33 U	--	--
16SB142	16SS1420002	08/25/2011	0.52 U	0.519 U	0.519 U	0.571 U	0.519 U	--	--
16SB142	16SB1420204	08/25/2011	0.58 U	0.578 U	0.578 U	1.39	0.578 U	--	--
16SB143	16SS1430002	08/25/2011	0.5 U	0.501 U	0.501 U	0.551 U	0.501 U	--	--
16SB143	16SB1430205	08/25/2011	0.58 U	0.582 U	0.582 U	0.641 U	0.582 U	--	--
16SB144	16SS1440002	08/25/2011	0.53 U	0.533 U	0.533 U	0.586 U	0.533 U	--	--
16SB144	16SB1440204	08/25/2011	0.51 U	0.514 U	0.514 U	0.566 U	0.514 U	--	--
16SB145	16SS1450002	08/25/2011	0.53 U	0.529 U	0.529 U	0.582 U	0.529 U	--	--
16SB145	16SB1450203	08/25/2011	0.53 U	0.533 U	0.533 U	0.587 U	0.533 U	--	--
16SB146	16SB1460205	08/25/2011	0.49 U	0.488 U	0.488 U	**51.4**	0.488 U	--	--
16SB147	16SS1470002	08/25/2011	0.51 U	0.775 J	0.511 U	19.3	0.511 U	--	--
16SB147	16SB1470206	08/25/2011	0.58 U	0.494 J	0.581 U	12.3 J	0.581 U	--	--
16SB148	16SS1480002	08/25/2011	0.53 U	0.533 U	0.533 U	5.57	0.533 U	--	--
16SB148	16SB1480206	08/25/2011	0.59 U	0.592 U	0.592 U	2.66	0.592 U	--	--
16SB150	16SB1500205	08/25/2011	0.52 U	0.518 U	0.518 U	**329**	0.518 U	--	--
16SB151	16SS1510002	08/25/2011	0.5 U	1.34	0.501 U	**123**	0.501 U	--	--
16SB151	16SB1510204	08/25/2011	0.54 U	0.295 J	0.537 U	**220**	0.537 U	--	--
16SB152	16SS1520002	08/25/2011	0.54 U	0.539 U	0.539 U	**185**	0.539 U	--	--
16SB152	16SB1520203	08/25/2011	0.57 U	0.569 U	0.569 U	**173**	0.569 U	--	--
16SB153	16SS1530002	08/25/2011	0.52 U	0.519 U	0.519 U	**157**	0.519 U	--	--
16SB153	16SB1530206	08/25/2011	0.52 U	0.518 U	0.518 U	**236**	0.518 U	--	--
16SB153	16SB1530206	08/25/2011	0.52 U	0.518 U	0.518 U	**236**	0.518 U	--	--
16SB199	16SB1990406	8/24/2011	0.50 U	0.495 U	0.495 U	0.454 J	0.495 U	--	--
16SB199	16SB1990709	8/25/2011	0.50 U	0.524 U	0.524 U	0.323 J	0.524 U	--	--
16SB200	16SB2000204	8/25/2011	0.55 U	**1790**	24.3	**37500**	2.26	--	--
16SB201	16SB2010203	8/25/2011	0.50 U	0.378 J	0.504 U	0.555 U	0.504 U	--	--
16SB202	16SB2020204	8/25/2011	0.53 U	0.533 U	0.533 U	16	0.533 U	--	--
16SB203	16SB2030203	8/25/2011	0.52 U	0.521 U	0.521 U	0.373 J	0.521 U	--	--
16SB204	16SB2040002	8/25/2011	0.47 U	0.628 J	0.471 U	**45.6**	0.471 U	--	--
16SB204	16SB2040206	8/25/2011	2.74	46.9	0.5 U	**546**	0.5 U	--	--
16SB204	16SB2040709	8/25/2011	0.48 U	4.23	0.478 U	**57.9**	0.478 U	--	--
16SB205	16SB2050002	8/25/2011	0.37 J	32.5 J	0.523 J	**234**	0.498 U	--	--
16SB205	16SB2050206	8/25/2011	1.32	109	2.1	**1250**	0.474 U	--	--
16SB205	16SB2050607	8/25/2011	1.83	168	3.33	**2080**	0.511 U	--	--
16SB206	16SB2060002	8/25/2011	0.53 U	1.42	0.531 U	11.9	0.531 U	--	--

TABLE 2-3

TCE CONTAMINATION AREA SOIL SAMPLE SCREENING
SWMU 16
NSA CRANE
CRANE, INDIANA

Location	Sample ID	Sample Date	1,1,2-TRICHLOROETHANE	CIS-1,2-DICHLOROETHENE	TRANS-1,2-DICHLOROETHENE	TRICHLOROETHENE	VINYL CHLORIDE	CARBON TETRACHLORIDE	TETRACHLOROETHENE
		SWMU 16 MCS	**32**	**420**	**580**	**36**	**14**	**38**	**46**
16SB206	16SB2060204	8/25/2011	0.71 J	121	49.4	**2030**	0.564 U	--	--
16SB207	16SS207-0002	10/06/2012	2.48 U	2.48 UJ	2.48 U	10.4 J	2.48 U	2.48 U	2.48 U
16SB208	16SS208-0002	10/06/2012	2.28 U	2.28 UJ	2.28 U	15.3	2.28 U	2.28 U	2.28 U
16SB209	16SS209-0002	10/06/2012	2.23 U	2.23 UJ	2.23 U	**44.2**	2.23 U	2.23 U	2.23 U
16SB209	16SB209-0203	10/06/2012	3 U	3 UJ	3 U	**45.5 J**	3 U	3 U	3 U
16SB210	16SS210-0002	10/06/2012	2.54 U	2.54 UJ	2.54 U	2.54 U	2.54 U	2.54 U	2.54 U
16SB211	16SS211-0002	10/06/2012	2.99 UJ	2.99 UJ	2.99 UJ	13.4 J	2.99 UJ	2.99 UJ	2.99 UJ
16SB212	16SS212-0002	10/06/2012	2.38 U	2.38 UJ	2.38 U	23.8	2.38 U	2.38 U	2.38 U
16SB213	16SS213-0002	10/06/2012	2.59 U	2.59 UJ	2.59 U	3.49 J	2.59 U	2.59 U	2.59 U
16SB214	16SS214-0002	10/06/2012	2.86 U	2.86 UJ	2.86 U	2.86 U	2.86 U	2.86 U	2.86 U
16SB215	16SS215-0002	10/06/2012	2.54 U	2.54 UJ	2.54 U	30.1	2.54 U	2.54 U	2.54 U
16SB216	16SS216-0002	10/06/2012	2.52 U	2.52 UJ	2.52 U	3.36 J	2.52 U	2.52 U	2.52 U
16SB217	16SS217-0002	10/06/2012	2.21 U	2.21 UJ	2.21 U	1.62 J	2.21 U	2.21 U	2.21 U
16SB218	16SS218-0002	10/06/2012	2.51 UJ	2.51 UJ	2.51 UJ	21.1 J	2.51 UJ	2.51 UJ	2.51 UJ
16SB219	16SS219-0002	10/06/2012	2.39 U	2.39 UJ	2.39 U	2.39 U	2.39 U	2.39 U	2.39 U
16SB219	16SB219-0206	10/06/2012	2.55 U	2.55 UJ	2.55 U	**56**	2.55 U	2.55 U	2.55 U
16SB220	16SS220-0002	10/06/2012	2.51 U	2.51 UJ	2.51 U	2.51 U	3.17 J	2.51 U	2.51 U
16SB220	16SB220-0206	10/06/2012	2.42 U	2.42 U	2.42 U	2.42 U	2.42 UJ	2.42 U	2.42 U
16SB236	16SS236-0002	11/30/2012	2.31 U	2.31 U	2.31 U	2.31 U	2.31 U	2.31 U	2.31 U
16SB236	16SB236-0206	11/30/2012	2.34 U	2.34 U	2.34 U	2.34 U	2.34 U	2.34 U	2.34 U
16SB237	16SS237-0002	11/30/2012	2.64 U	2.64 U	2.64 U	2.64 U	2.64 U	2.64 U	2.64 U
16SB237	16SB237-0206	11/30/2012	2.31 U	2.31 U	2.31 U	2.31 U	2.31 U	2.31 U	2.31 U
16SB238	16SS238-0002	11/30/2012	2.35 U	2.35 U	2.35 U	2.35 U	2.35 U	2.35 U	2.35 U
16SB238	16SB238-0206	11/30/2012	2.23 U	2.23 U	2.23 U	2.23 U	2.23 U	2.23 U	2.23 U
16SB239	16SS239-0002	11/30/2012	2.29 U	2.29 U	2.29 U	2.29 U	2.29 U	2.29 U	2.29 U
16SB239	16SB239-0206	11/30/2012	1.79 U	1.79 U	1.79 U	1.79 U	1.79 U	1.79 U	1.79 U
16SB240	16SS240-0002	11/30/2012	2.23 U	2.23 U	2.23 U	2.23 U	2.23 U	2.23 U	2.23 U
16SB240	16SB240-0206	11/30/2012	2.31 U	2.31 U	2.31 U	2.31 U	2.31 U	2.31 U	2.31 U
16SB241	16SS241-0002	11/30/2012	2.04 U	2.04 U	2.04 U	2.04 U	2.04 U	2.04 U	2.04 U
16SB241	16SB241-0206	11/30/2012	2.57 U	2.57 U	2.57 U	2.57 U	2.57 U	2.57 U	2.57 U

All units are in micrograms per kilogram (µg/kg)
Shaded cells indicate the chemical concentration exceeds the MCS.

J - chemical detected, but the conentration reported is an estimated value
MCS - Media Cleanup Standard
U - concentration not detected at the laboratory detection limit
-- - not analyzed

TABLE 2-4

METALS CONTAMINATION AREA SOIL SCREENING
SWMU 16
NSA CRANE
CRANE, INDIANA

SAMPLE LOCATION	SAMPLE DATE	PRE-REMEDIATION CONCENTRATIONS			
		ANTIMONY	COPPER	LEAD	ZINC
	SWMU 16 MCS	***6.9 (1) /6.3 (2)***	***253***	***652 (2) /163 (3)***	***1716***
16SB181	8/26/2011	6.9	450	1800	4000
16SB014	3/27/2003	27.2	231	1240	575
16SB188	8/26/2011	21	290	1100	3200
16SB186	8/26/2011	18	250	830	2600
16SB020	3/28/2003	7.7	65.4	765	132
16SB177	8/26/2011	7.3	150	760	2000
16SB184	8/26/2011	7.8	170	640	1400
16SB190	8/26/2011	15	190	600	2000
16SB179	8/26/2011	4.9	190	590	2200
16SB013	3/28/2003	13	122	405	1560
16SB157	8/25/2011	4.5	110	390	850
16SB180	8/26/2011	4.7	96	370	1100
16SB183	8/26/2011	4.9	95	360	1200
16SB010	3/27/2003	7.3	127	345	972
16SB009	3/27/2003	8.9	84	311	552
16SB178	8/26/2011	6	88	290	1500
16SB012	3/28/2003	3.6	62.6	258	603
16SB044	12/5/2003	3.3	72.9	240	967
16SB021	3/28/2003	14.8	391	211	2510
16SB015	3/27/2003	4.4	413	211	1150
16SB182	8/26/2011	3.2	63	210	630
16SB008	3/27/2003	2.9	52.5	195	271
16SB176	8/26/2011	5	52	170	550
16SB016	3/27/2003	6.6	66.9	154	563
16SB031	3/28/2003	1.6	42.5	150	633
16SB017	3/27/2003	1.4	39.5	140	438
16SB045	12/5/2003	3.1	32.2	127	455
16SB033	4/9/2003	1.1	33.5	123	193
16SB187	8/26/2011	2.6	41	120	390
16SB159	8/25/2011	1.8	52	120	380
16SB162	8/25/2011	1.7	38	120	170
16SB155	8/25/2011	1.2	36	120	470
16SB089	8/14/2004	5.2	43.5	112	683
16SB086	10/16/2004	3	38.5	110	368
16SB172	8/25/2011	2.9	38	110	330
16SB163	8/25/2011	0.51	34	94	210
16SB165	8/25/2011	0.27	35	94	190
16SB029	3/28/2003	2.8	35	85.7	401
16SB189	8/26/2011	1.6	27	85	320
16SB088	8/14/2004	1.9	36.8	82.6	280
16SB171	8/25/2011	1.6	41	79	340
16SB185	8/26/2011	1.5	27	78	390
16SB022	3/28/2003	2	28.3	69.9	197
16SB154	8/25/2011	1.7	24	69	200
16SB167	8/25/2011	0.61	28	55	140
16SB023	3/28/2003	1.3	23	43	102
16SB166	8/25/2011	0.49	33	42	280
16SB164	8/25/2011	0.63	24	39	160
16SB161	8/25/2011	0.7	100	38	1400
16SB168	8/25/2011	0.53	17	36	97

TABLE 2-4

METALS CONTAMINATION AREA SOIL SCREENING
SWMU 16
NSA CRANE
CRANE, INDIANA

SAMPLE LOCATION	SAMPLE DATE	PRE-REMEDIATION CONCENTRATIONS			
		ANTIMONY	COPPER	LEAD	ZINC
	SWMU 16 MCS	***6.9 (1) /6.3 (2)***	***253***	***652 (2) /163 (3)***	***1716***
16SB175	8/25/2011	0.42	24	32	84
16SB028	3/28/2003	0.66	19.8	31.8	144
16SB043	12/5/2003	1.2	19.2	31.5	144
16SB169	8/25/2011	0.58	17	31	91
16SB170	8/25/2011	0.69	17	29	130
16SB174	8/25/2011	1.1	25	28	85
16SB085	8/14/2004	0.96	19.2	26	135
16SB025	3/28/2003	1.5	19	24.9	97.2
16SB156	8/25/2011	0.57	16	24	76
16SB158	8/25/2011	0.33	11	23	42
16SB087	8/14/2004	0.94	14.6	21.4	88.6
16SB160	8/25/2011	0.081	21	19	130
16SB024	3/28/2003	2	15.3	18	174
16SB032	4/9/2003	0.79	15.9	17.2	40.6
16SB173	8/25/2011	0.34	13	17	59
16SB030	3/28/2003	1.2	18.8	16.9	68.2
16SB007	3/27/2003	0.29	13.8	16	48.1
16SB011	3/27/2003	3.4	16.9	15.2	55.9
16SB026	4/9/2003	0.19	13	14.8	49
16SB018	3/28/2003	0.59	12.8	9.8	47.8
16SB027	3/28/2003	0.27	5.1	8.3	24.3
16SB019	3/28/2003	0.29	6.9	8.1	17.6
16SB221	10/5/2012	--	--	--	--
16SB222	10/5/2012	--	--	--	--
16SB223	10/5/2012	--	--	--	--
16SB224	10/5/2012	--	--	--	--
16SB225	10/5/2012	--	--	--	--
16SB226	10/5/2012	--	--	--	--
16SB227	10/5/2012	--	--	--	--
16SB228	10/5/2012	--	--	--	--
16SB229	10/5/2012	--	--	--	--
16SB230	10/5/2012	--	--	--	--
16SB231	10/5/2012	--	--	--	--
16SB232	10/5/2012	--	--	--	--
16SB233	10/5/2012	--	--	--	--
16SB234	10/5/2012	--	--	--	--
16SB235	10/5/2012	--	--	--	--
Average Concentration		**4**	**74**	**212**	**632**

Notes:
1 - Basewide background concentration for soil.
2 - Plant preliminary remediation goal, not to be exceeded at any given sample point except as discussed in Section 2.2.3.3.
3 - Preliminary remediation goal for invertivorous birds - applied as an average lead concentration across the site.

Cells are shaded if the chemical concentration exceeds the greater of the basewide background concentration or the preliminary remediation goal.

Because the lead PRG for invertovorous birds is an average across the site, the lead concentrations are shaded if they exceed the PRG for plants.

MCS - media cleanup standard

PRG - preliminary remediation goal
-- - not analyzed

PGH P:\GIS\CRANE_NSWC\MAPDOCS\MXD\SWMU16_UST_SAMPLING_LOCS_R1.MXD 03/25/13 SP

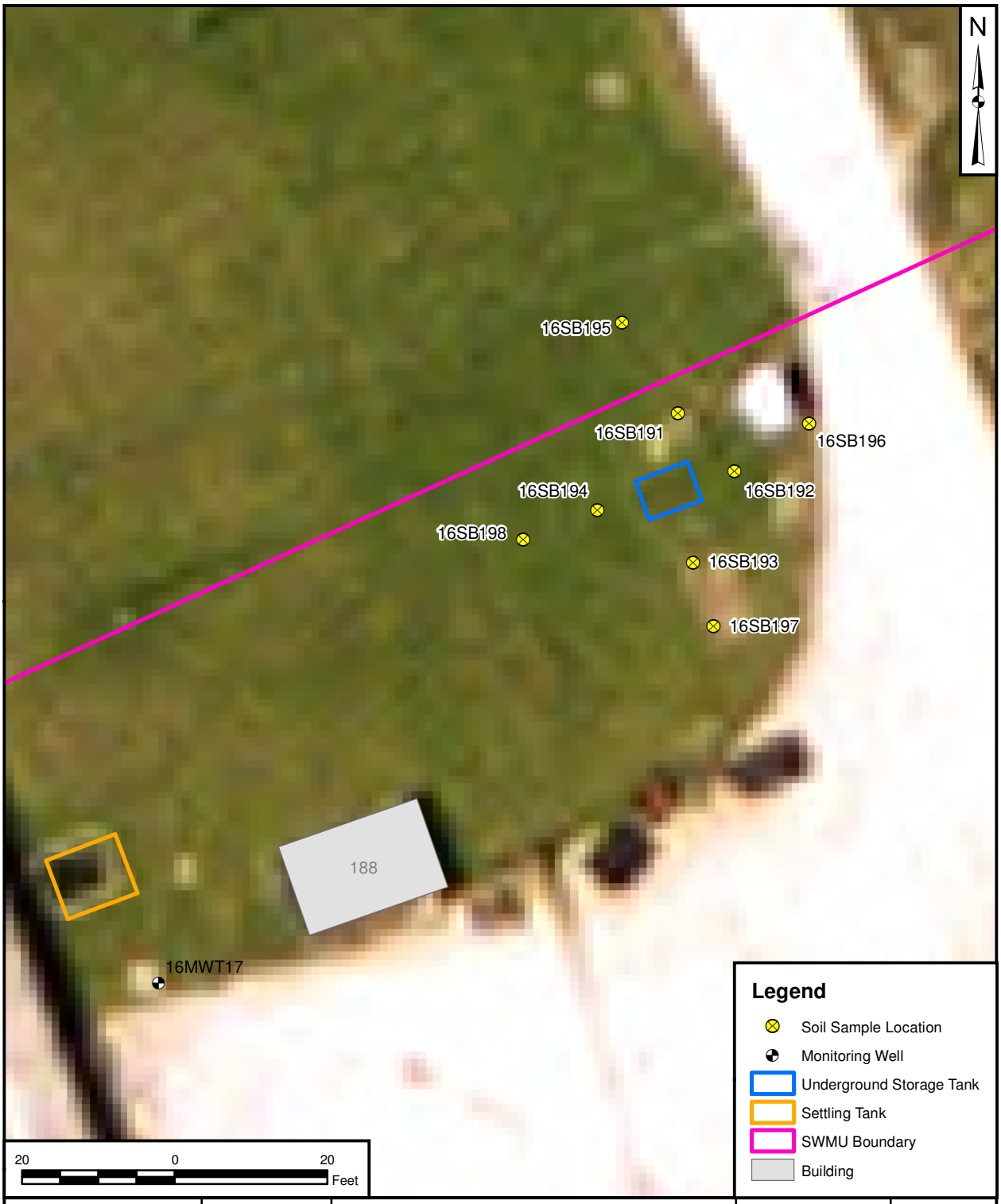

DRAWN BY S. PAXTON	DATE 01/19/12	UST AREA SAMPLING LOCATIONS SWMU 16 - CAST HIGH EXPLOSIVES FILL / BUILDING 146 INCINERATOR NSA CRANE CRANE, INDIANA	CONTRACT NUMBER ___	CTO NUMBER F277
CHECKED BY R. BARRINGER	DATE 03/25/13		APPROVED BY ___	DATE ___
REVISED BY S. PAXTON	DATE 03/25/13		APPROVED BY ___	DATE ___
SCALE AS NOTED			FIGURE NO. 2-1	REV 0

PGH P:\GIS\CRANE_NSWC\MAPDOCS\MXD\SWMU16_TCE_TAGS_SHALLOW_R1.MXD 03/25/13 SP

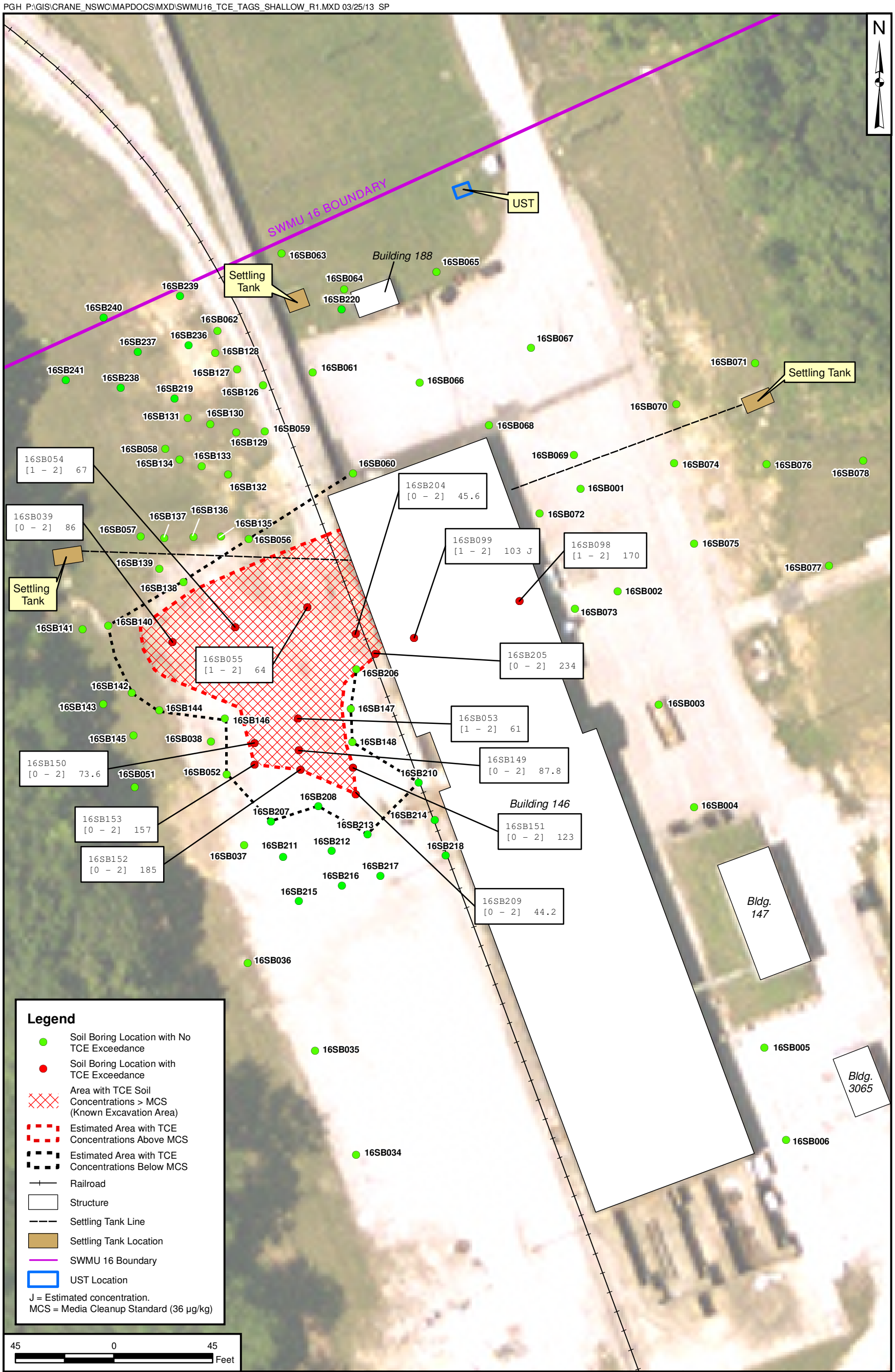

DRAWN BY	DATE		TCE CONTAMINATION AREA SOIL SAMPLING RESULTS AND CLEAN BOUNDARY SURFACE SOIL (0 - 2 FT) SWMU 16 - CAST HIGH EXPLOSIVES FILL/BLDG. 145 INCINERATOR NSA CRANE CRANE, INDIANA	CONTRACT NUMBER 02127	CTO NUMBER F277
C. TULLEY	01/20/12				
CHECKED BY	DATE			APPROVED BY —	DATE —
R. BARRINGER	03/25/13				
REVISED BY	DATE			APPROVED BY —	DATE —
S. PAXTON	03/25/13				
SCALE AS NOTED		NAVFAC		FIGURE NO. 2-2	REV 0

PGH P:\GIS\CRANE_NSWC\MAPDOCS\MXD\SWMU16_TCE_TAGS_INTERMEDIATE.MXD 03/25/13 SP

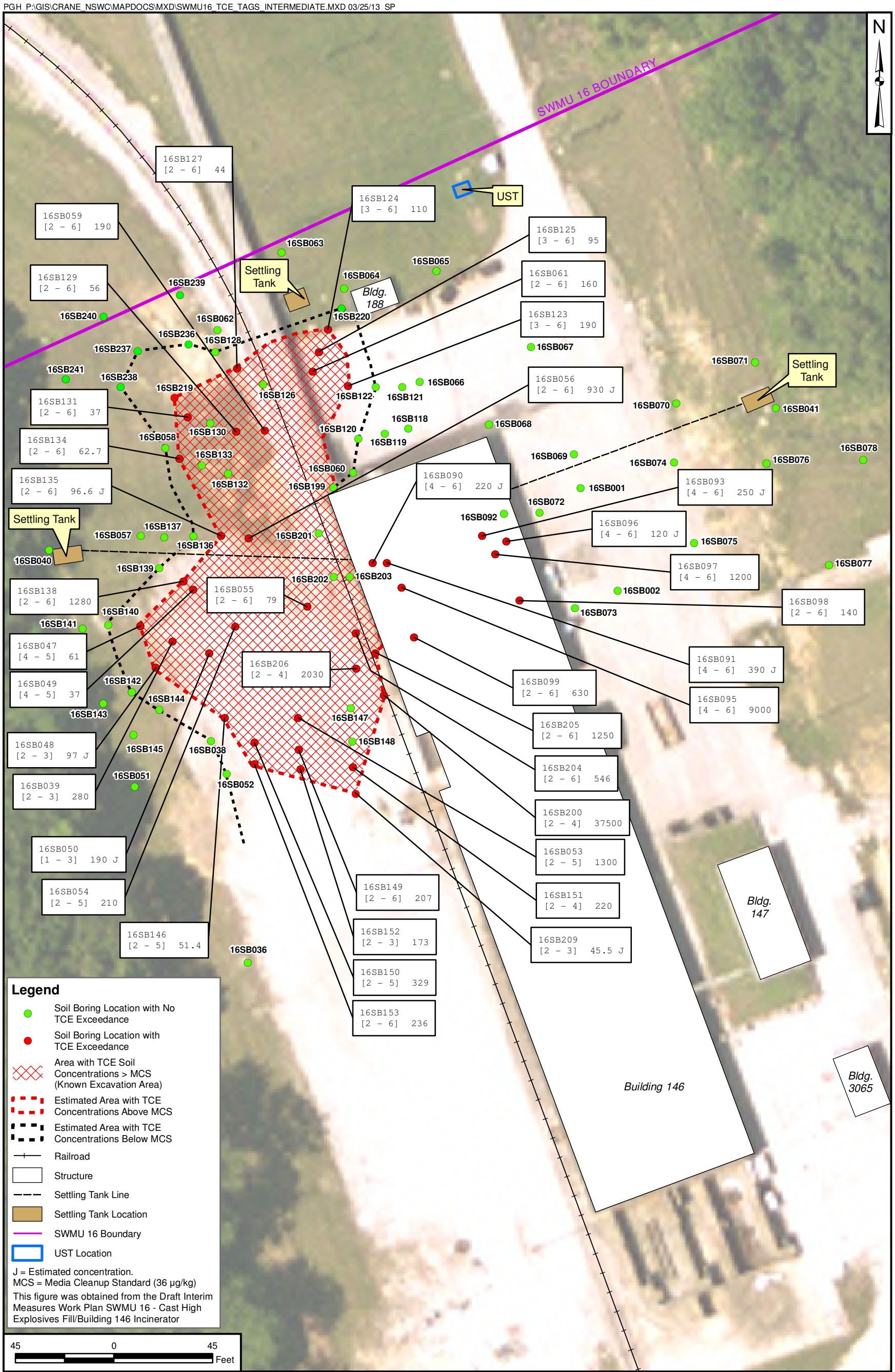

DRAWN BY	DATE
C. TULLEY	01/20/12
CHECKED BY	DATE
R. BARRINGER	02/06/13
REVISED BY	DATE
S. PAXTON	03/25/13
SCALE	
AS NOTED	

NAVFAC

TCE CONTAMINATION AREA SOIL SAMPLING RESULTS
AND CLEAN BOUNDARY
INTERMEDIATE SOIL (2 - 6 FT)
SWMU 16 - CAST HIGH EXPLOSIVES FILL/BLDG. 145 INCINERATOR
NSA CRANE
CRANE, INDIANA

CONTRACT NUMBER	CTO NUMBER
02127	F277
APPROVED BY	DATE
—	—
APPROVED BY	DATE
—	—
FIGURE NO. 2-3	REV 0

PGH P:\GIS\CRANE_NSWC\MAPDOCS\MXD\SWMU16_TCE_TAGS_DEEP.MXD 03/25/13 SP

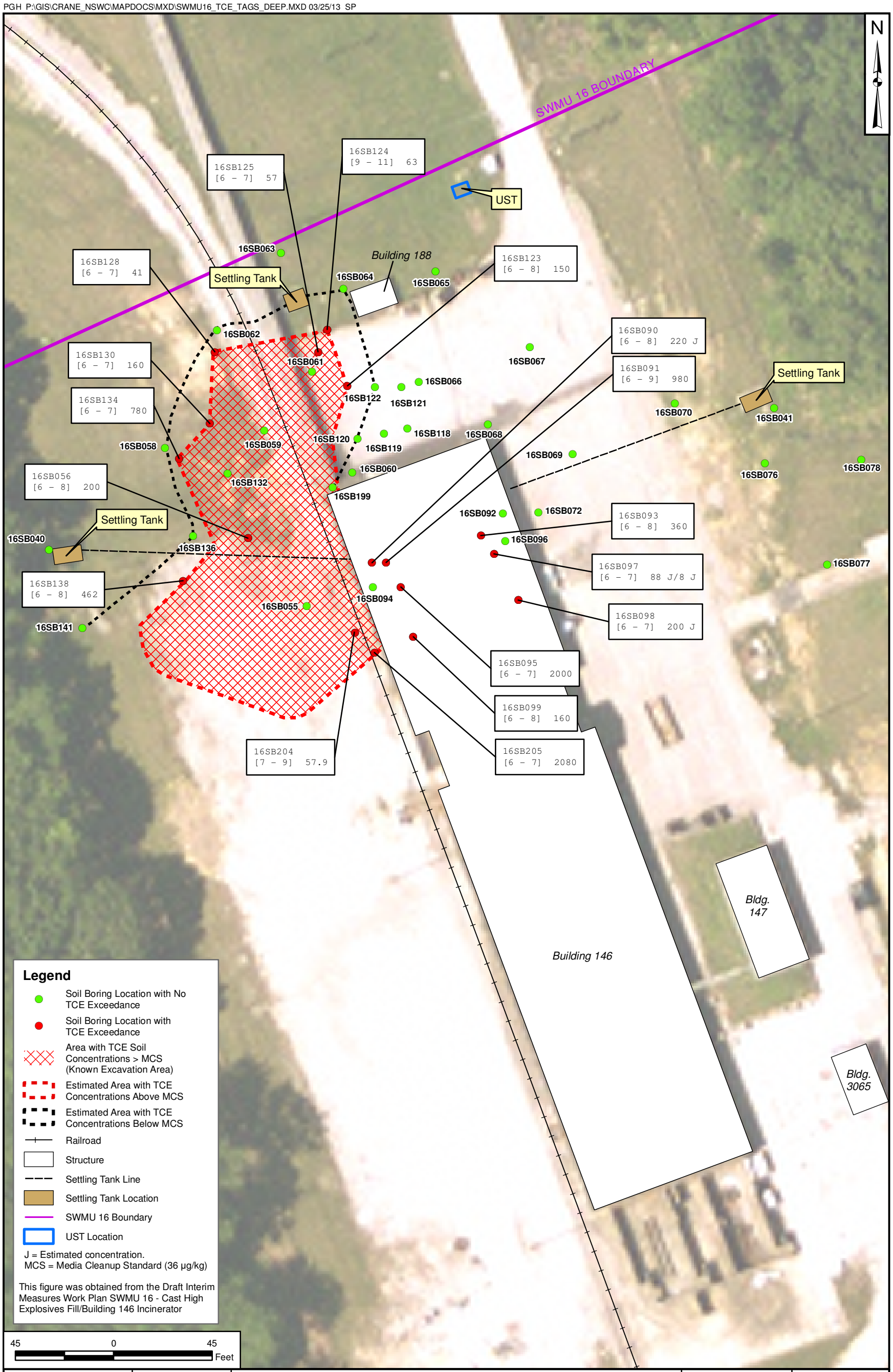

DRAWN BY C. TULLEY	DATE 01/20/12	TCE CONTAMINATION AREA SOIL SAMPLING RESULTS AND CLEAN BOUNDARY DEEP SOIL (6 - 10 FT) SWMU 16 - CAST HIGH EXPLOSIVES FILL/BLDG. 145 INCINERATOR NSA CRANE CRANE, INDIANA	CONTRACT NUMBER 02127 / CTO NUMBER F277
CHECKED BY R. BARRINGER	DATE 03/25/13		APPROVED BY — / DATE —
REVISED BY S. PAXTON	DATE 03/25/13		APPROVED BY — / DATE —
SCALE AS NOTED	NAVFAC		FIGURE NO. 2-4 / REV 0

PGH P:\GIS\CRANE_NSWC\MAPDOCS\MXD\SWMU16_TCE_SURFACE_BEDROCK_CONTOURS_R1.MXD 02/08/13 JN

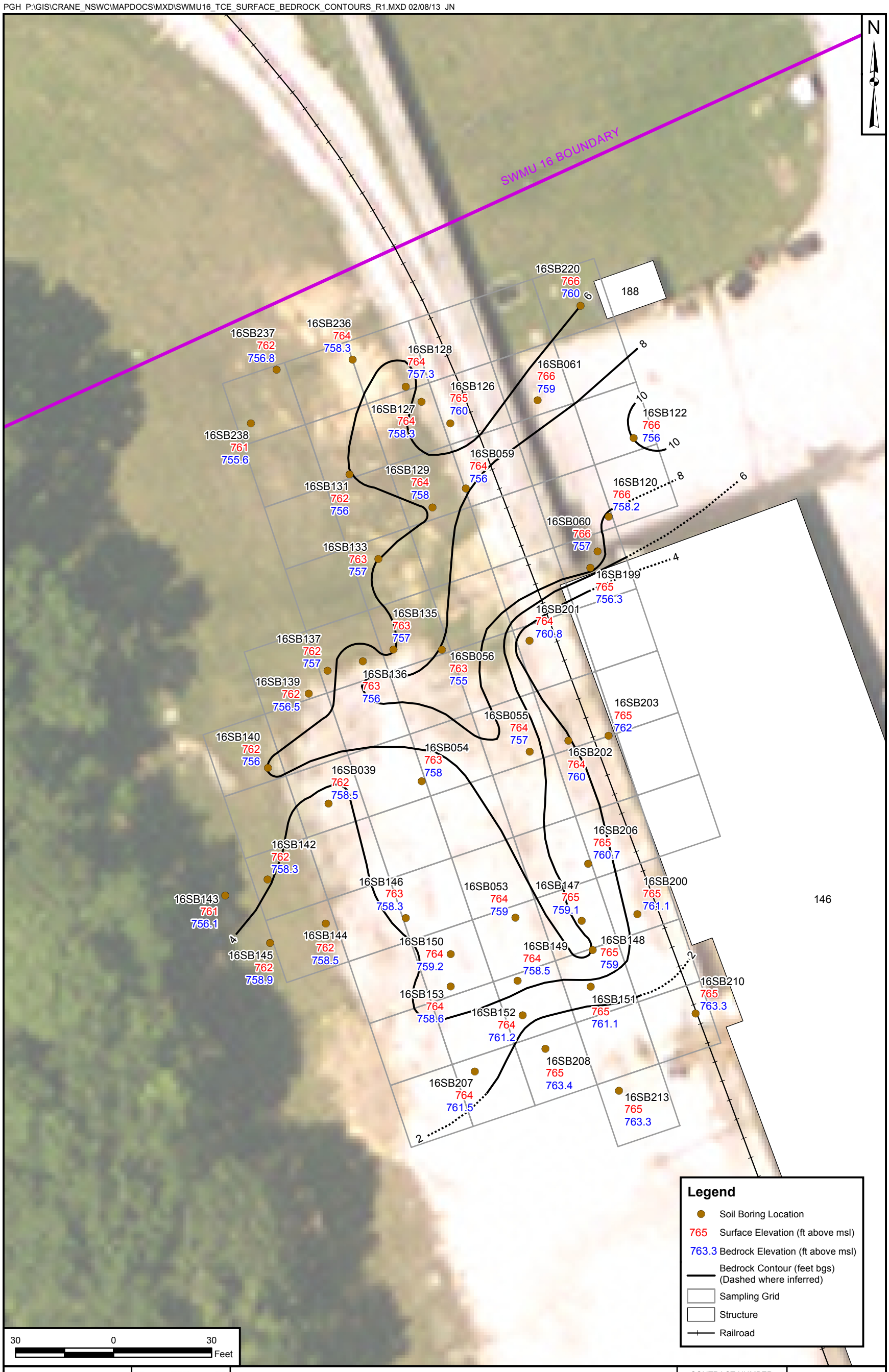

DRAWN BY	DATE
J. NOVAK	01/14/13
CHECKED BY	DATE
R. BARINGER	02/08/13
REVISED BY	DATE
J. NOVAK	02/08/13
SCALE	
AS NOTED	

NAVFAC

BEDROCK ELEVATIONS
SWMU 16 - CAST HIGH EXPLOSIVES FILL/BLDG. 146 INCINERATOR
NSA CRANE
CRANE, INDIANA

CONTRACT NUMBER	CTO NUMBER
02127	F277
APPROVED BY	DATE
—	—
APPROVED BY	DATE
—	—
FIGURE NO. 2-5	REV 0

PGH P:\GIS\CRANE_NSWC\MAPDOCS\MXD\SWMU16_METALS_PROP_SOIL_REMOVAL_AREA_REV1.MXD 02/13/13 SP

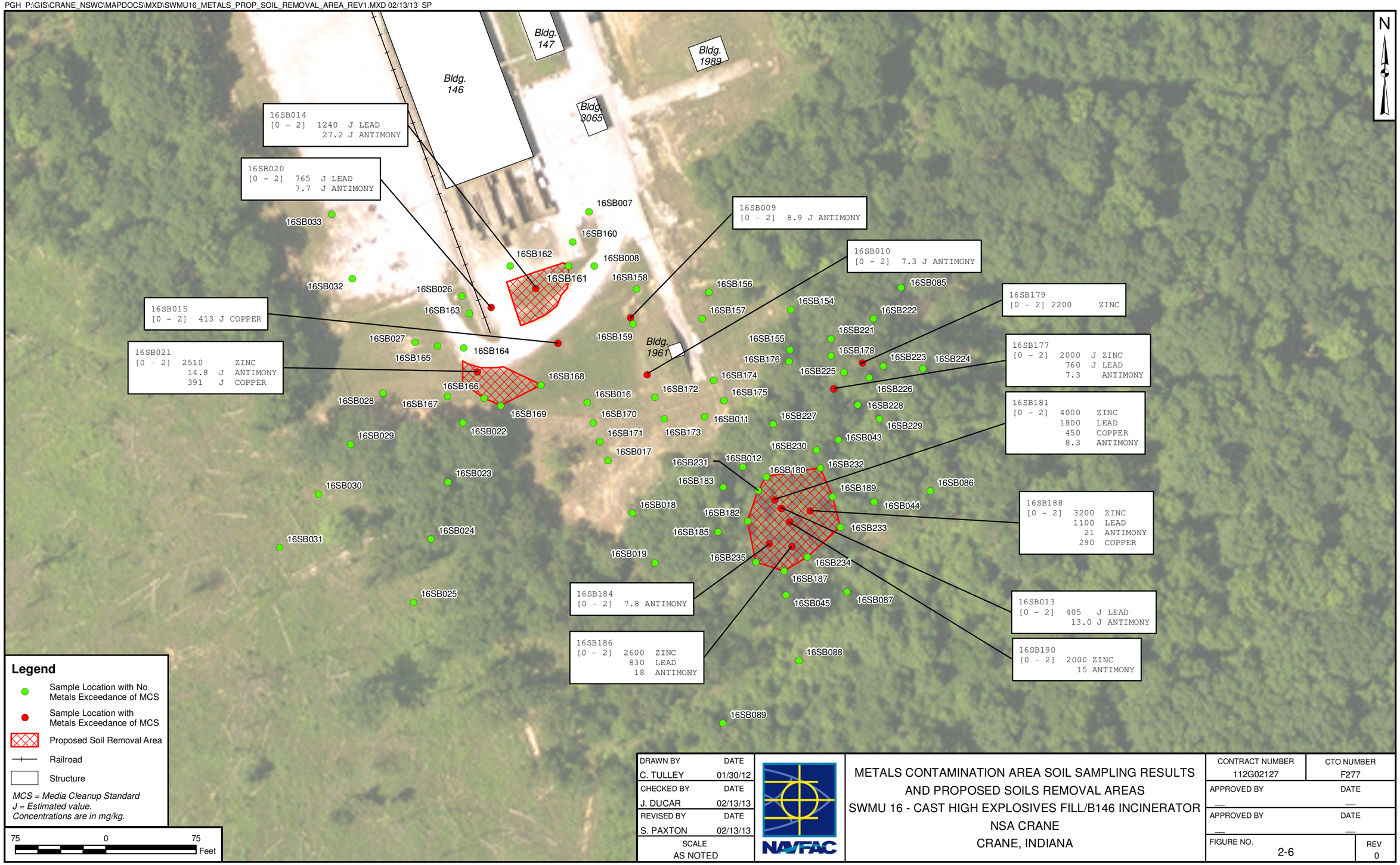

DRAWN BY	DATE
C. TULLEY	01/30/12
CHECKED BY	DATE
J. DUCAR	02/13/13
REVISED BY	DATE
S. PAXTON	02/13/13
SCALE	
AS NOTED	

NAVFAC

METALS CONTAMINATION AREA SOIL SAMPLING RESULTS
AND PROPOSED SOILS REMOVAL AREAS
SWMU 16 - CAST HIGH EXPLOSIVES FILL/B146 INCINERATOR
NSA CRANE
CRANE, INDIANA

CONTRACT NUMBER	CTO NUMBER
112G02127	F277
APPROVED BY	DATE
—	—
APPROVED BY	DATE
—	—
FIGURE NO. 2-6	REV 0

3.0 INTERIM MEASURES WORK PLAN

This section describes the interim measures for SWMU 16. The interim measures for SWMU 16 includes the excavation and off-site disposal of accessible contaminated soils, removal and disposal of an underground storage tank, and demolition and disposal of settling tanks. This IMWP describes the location and extent of removal of VOCs (primarily TCE) and metals (copper, lead, antimony and zinc) contaminated soil for offsite disposal from the areas around Building 146. Additionally, this IMWP describes the reuse of uncontaminated soil from the excavation areas.

3.1 DESCRIPTION OF THE INTERIM MEASURES

This IMWP specifies the removal of accessible contaminated soils at SWMU 16. In addition, the IMWP specifies the restoration of the areas disturbed by IMWP activities. The contaminated soils to be removed have been identified as soil source areas containing either TCE or metals in concentrations in excess of the MCS for the respective contaminant. The volumes presented for the soils to be excavated are in-place estimates. It is anticipated that these volumes will increase after the soils are excavated and are in an unconsolidated state.

A work assignment responsibility chart (Table 3-1) identifies the responsibilities that the Contractor, NSA Crane, and Tetra Tech will have in the implementation of the IMWP.

Specifically, the IMWP consists of the following major components:

- Soil Excavation/Removal

  - Northern TCE Areas. As shown in Figure 3-1, the Northern TCE Areas consist of two irregularly-shaped polygons covering a combined area of approximately 0.15 acres (6,573 square feet), located northwest and north of Building 146. The soil excavation approach is to excavate accessible contaminated soil, while leaving adequate soil in place to avoid structural disturbance of the railroad track and the covered walkway leading to Building 146 (schematic presented in Figure 3-2). The top two feet of soil do not contain TCE above the MCS in the Northern TCE Areas, so approximately 358 cubic yards (cy) of surface soil (surface to 1.5 feet bgs) may be stockpiled for later use as backfill. The soil in the Northern TCE Areas from a depth of 1.5 feet bgs to bedrock contains approximately 1,867 cy of soil with TCE above the MCS, and local bedrock ranges from 4 feet bgs to 11 feet bgs. An estimated 1,031 cy of TCE-contaminated soil

will be excavated from the Northern TCE Areas for transport and off-site disposal. An estimated 836 cy of TCE-contaminated soil will remain beneath the railroad track and covered walkway, as schematically depicted in Figure 3-2.

- Southern TCE Area. As shown in Figure 3-1, the Southern TCE Area consists of an irregularly-shaped soil polygon covering approximately 0.24 acres (10,267 square feet), located south of the Northern TCE Areas and immediately west of the railroad track adjacent to Building 146. The Southern TCE Area contains approximately 2,162 cy of soil with TCE concentrations above the MCS from the ground surface to the bedrock. Bedrock ranges in depth from 1.5 feet bgs to 9 feet bgs in the Southern TCE Area. TCE-contaminated soil (1,718 cy) will be excavated, transported, and disposed offsite. An estimated 444 cy of TCE-contaminated soil will remain in a wedge beneath the railroad track in the Southern TCE Area, similar to the schematic excavation approach depicted in Figure 3-2.

- Metals Areas South of Building 146 – Three non-contiguous soil polygon areas covering a total area of approximately 0.17 acres (7,614 square feet) and extending to a depth of two feet bgs will be excavated to reduce ecological risks to acceptable levels (Figure 3-1). This estimated soil volume (564 cubic yards) will be excavated and transported and disposed offsite.

These locations of soil excavations are identified on Figures 2-2, 2-3, and 2-4 for the TCE areas. Figure 2-6 presents the locations of soils excavations for the metals areas. Figure 3-1 presents the soil excavation nodes and Table 3-2 lists the excavation node northing and easting coordinates for those points. Appendix C presents photographs of the general Building 146 area within SWMU 16. Appendix D contains copies of available design drawings.

- Settling Tank Excavation/Removal – Three abandoned concrete settling tanks located northwest, north, and northeast of Building 146 were cleaned and their inlet and outlet piping were sealed. The concrete, any structural steel (e.g., rebar), and any terra cotta piping associated with these settling tanks within the soil removal areas will be excavated, characterized for disposal purposes, and transported for off-site disposal. Disturbed soils from settling tank removals, which are not located in the soil excavation area, will be backfilled into the excavation.

The settling tank locations are identified on Figure 3-2.

- Monitoring Well Abandonment – Monitoring well 16MWT17 is located several feet south of the north settling tank structure, and is located within the TCE-contaminated soil removal area north of Building

146. Since the soil in this area will be excavated to bedrock, this shallow bedrock (less than 20 feet deep) monitoring well will be properly abandoned, and the ground surface infrastructure elements associated with the well will be removed before soil removal activities are initiated. Well abandonment procedures will be in accordance with Indiana Administrative Code (IAC) regulations in 312 IAC 13-10-2(e)(6). Well abandonment activities must be performed by an Indiana licensed well driller (Indiana Code (IC) 25-39-4) who will confirm that the well screen and casing are completely filled with impervious grouting material to meet abandonment requirements. Monitoring Well 16MWT17 is not proposed for replacement.

- UST Excavation/Removal – One abandoned 300-gallon UST located northeast of Building 146, is to be removed. This UST has been cleaned, filled with water, and sealed. Prior to removal, the tank water is to be pumped out and disposed by the contractor at an off-site facility. The UST is to be removed and sold as scrap metal or disposed off-site. However, should any inlet or outlet UST piping be encountered during excavation, the excavation limits should be extended to better determine the source of the UST piping at the direction of the Officer in Charge of Construction (OICC). Any encountered UST piping should be confirmed as plugged and capped.

The UST location is identified on Figure 3-2.

- Dewatering of Excavated Soil – Although the need to dewater any excavated soils is not anticipated, should precipitation or mishandling of excavated soils result in a need to dewater prior to off-site disposal, wet soil will be stockpiled within a dewatering pad located within the construction area. The water drained from the soil will be containerized, filtered, and characterized. It is assumed that, following characterization, treatment will not be required and collected water will be discharged to an NSA Crane approved local stabilized drainage channel or the nearest NSA Crane storm drain. It is the Contractor's responsibility to verify this assumption prior to discharging collected water. The volume of water collected through dewatering is not expected to be large, unless soil excavation/removal is performed during periods of heavy precipitation.

- Restoration of Utilities: Soils will be removed from areas where utilities including roof drain lines are located. These must be restored to pre-excavation conditions. Figure 3-3 shows the location of the utilities.

- Restoration of Grounding Protection System: Soils will be removed in areas where lightning protection systems are located. These systems must be restored. Figure 3-3 shows the locations of the lightning arrestors, primary girdle and secondary grounding lines.

- Sampling and Analysis – At the completion of this IM and following removal of the support facilities (e.g., dewatering pad, decontamination pad, and material storage area, etc.), Tetra Tech will collect verification samples to confirm that lining systems of the support facilities did not fail during implementation of this IM. If it is determined that the lining system under any of the support facilities did fail, potentially resulting in the contamination of the soils below the support facilities, the Contractor will be required to remove that contamination at their own expense.

- Off-site Disposal of Soils, Debris, and Scrap Metal – Soils, debris, and scrap metal will be disposed at an off-site NAVFAC-approved, waste disposal facility. The Contractor will be responsible to verify the classification of off-site disposal material (i.e., disposal as non-hazardous material) by conducting characterization sampling and analysis and satisfying the waste disposal facility requirements.

- Backfilling and Restoration of Soil Excavations – After excavation of contaminated soils, the excavated areas will be backfilled, compacted, and regraded to the level of surrounding grades (Figure 3-1). As indicated in Figure 3-2, geofabric will be installed within the TCE excavation areas to provide a physical barrier that distinguishes clean backfill materials from remaining TCE-contaminated soil. The geofabric will aid future removal actions by defining the excavation limits of this interim measures removal action when the remaining soil containing TCE above MCS is planned for excavation, removal, and off-site disposal. In addition, the backfilled areas will be restored to pre-construction conditions using permanent stabilization practices by covering the backfilled areas with gravel and, where appropriate, vegetation featuring a variety of habitat enhancement plant species.

3.2 PERFORMANCE STANDARDS

For the purposes of defining the excavation areas and performance standards associated with each excavation area presented on Figure 3-1 the following is a summary of the excavation areas shown and the associated performance standards for that excavation area.

Excavation Location Identification	Performance Standards for Excavation/Restoration
TCE (three) Contaminated Areas	Surface/Subsurface Soil Excavation/Restoration
Metals (three) Contaminated Areas	Surface/Subsurface Soil Excavation/Restoration
UST (one) Removal Area	Pump-out/Disposal of Tank Water UST Debris Removal as Scrap Metal/Restoration
Settling Tank (three) Removal Areas	Debris Removal/Restoration

Performance standards for the IMWP are presented in the following sections.

Soil Excavation/Removal

Soils in the TCE Areas and Metals Areas will be excavated independently. This soil will be excavated, characterized as necessary for disposal purposes, and transported and disposed off-site.

The planned excavation at the TCE Areas includes two adjacent polygons that cover an area measuring approximately 0.386 acres. The Northern TCE Areas do not contain significant TCE concentrations in the top 2 feet of soil; therefore the corresponding surface soil volume in the Northern TCE Areas may be stockpiled for later use as backfill is approximately 358 cy (assuming removing the top 1.5 feet). Soil below the train track and the adjacent covered walkway will be left in place as summarized on Figure 3-2. With the exception of the soil volume (836 cy) to be left in place beneath the railroad track and the adjacent covered walkway (Figure 3-2), the remainder of soil in the Northern TCE Areas (more than 1.5 feet bgs) and all soil in the Southern TCE Area are planned for excavation down to the surface of the underlying bedrock. The approximate soil volumes for the TCE Areas were determined by reviewing the estimated soil thicknesses above bedrock (based on boring data presented in Figure 2-5) and confirming the total excavation area as estimated by the geographic information system (GIS) data. Soils in the Northern TCE Areas and the Southern TCE Area have an average thickness of less than 8 feet. The estimated soil volume targeted for excavation, removal, and offsite disposal from Northern TCE Areas and the Southern TCE Area sums to an estimated 2,749 cy.

The planned excavation areas within the three Metals Areas polygons cover approximately 0.175 acres (7,614 square feet). The approximate soil volumes to be excavated in the Metals Areas were determined by confirming the total excavation area for metals contaminated soils as estimated by the GIS data, and multiplying by a depth of 2 feet (the vertical limit of the soil removal excavation). All three Metals Areas extend to a depth of 2 feet bgs and contain metals above their MCS values. This total estimated soil volume for the three areas (564 cy) will be excavated and transported for offsite disposal.

SOIL EXCAVATION / REMOVAL SUMMARY

Soil Area	Depth (feet bgs)	Approximate Non-Hazardous Soil Volume (cy)
TCE Areas (north) Northwest and North of Building 146	To bedrock, as deep as 10 feet bgs – top 1.5 feet of soil to be stockpiled	358 (clean, retained for backfill) 1,031 (for removal)
TCE Area (south) West of Building 146	To bedrock, as deep as 8 feet bgs	1,718 (for removal)
Northern Metals Area (M-1) South of Building 146	2	120
Central Metals Area (M-2) Southwest of Building 146	2	98
Southern Metals Area (M-3) Southeast of Building 146	2	346

Wastewater Removal

Prior to excavation and removal of the UST, the UST wastewater will be pumped out for off-site disposal. The approximate water volume is 300 gallons. Prior to removal of the three settling tank structures, an estimated 4,640 gallons of water will sampled and characterized to support proper management and pumped out for temporary onsite staging and eventual off-site disposal.

UST Debris Excavation/Removal

The UST will be excavated and removed from the subsurface. The recovered UST debris will be sold as scrap metal. The scrap metal mass is approximately 230 pounds (lbs).

Soil Erosion Control

Soil that accumulates in E&S control devices (see Section 4.0) prior to backfilling of the excavations will be disposed off-site along with the contaminated soil. Following backfilling of the excavation, soil that accumulates in the E&S control devices will be used to restore the floodplain or spread across the disturbed ground surface of the floodplain excavation.

In the event the Contractor spills excavated soil on an uncontaminated area, the Contractor will be responsible for removing the contaminated soil along with the impacted surface soils, verify that all contaminated materials have been removed, and dispose of that material at their own expense.

The Contractor should identify the process of transporting excavated soil in the Contractor's work plan.

Dewatering

It is anticipated that the only material that will require dewatering is excavated soil during heavy precipitation event, that is, a precipitation event that results in sufficient water volume to require excavated soil dewatering prior to transportation for off-site disposal. Otherwise there is no anticipated need for soil dewatering. When necessary, excavated soil and sediments will be placed on the dewatering pad at a lift thickness no greater than 3 feet and allowed to drain by gravity. Following dewatering, the Contractor will collect the required disposal characterization samples and mix to promote additional dewatering. It is estimated that following the second day of dewatering, the moisture content of the soil will have been sufficiently reduced and the material will not require the addition of an absorbent agent to be suitable for transportation and disposal. At the conclusion of the field effort, if there is accumulated water at the dewatering pad, then the water will be sampled for characterization to ensure proper management for offsite disposal.

Sampling and Analysis

Support area verification samples will be collected by Tetra Tech from the surface soil below the decontamination pad, material storage area, and dewatering pad. Additional excavation, at the Contractor's expense, may or may not be required, based on the results of this verification sampling.

Disposal

Excavated soils will be sampled by the Contractor and analyzed for waste disposal characterization using the methods required by the NSA Crane-approved waste disposal facility. If dewatering is required, the soils will be sampled following the dewatering process. If there is accumulated water at the dewatering pad, then the water will be sampled for characterization to ensure proper management for offsite disposal. The Contractor is responsible for satisfying all disposal requirements of the selected disposal facility. The following is a summary of the volumes expected to be disposed off-site.

Area/Item	Contaminant	Quantity
TCE Area (three areas)	Trichloroethene	2, 749 cy
Metals Areas (three areas)	Metals	564 cy
UST Scrap Metal(1)	None	230 lbs
UST Water	None	300 gallons
Settling Tank Debris (three)	None	24 cy
Settling Tank Water	Unknown	4,640 gallons

Area/Item	Contaminant	Quantity
Dewatering Pad Water	Potential TCE/metals	(2)
	Total soil:	**3,313 cy**
	Total scrap metal:	**230 lbs**
	Total debris:	**24 cy**
	Total wastewater:	**4,940 gallons** (2)

(1) Only the approximate weight of UST debris could be estimated based on the current information.
(2) A volume estimate for water from the Dewatering Pad is not included in this table. Unless soils are excavated during or soon after a precipitation event, there is no anticipated dewatering for the soil areas planned for excavation and removal.

Backfilling

Surface and subsurface soil excavation and impacted areas will be backfilled to pre-construction conditions. The backfill materials obtained from an off-site borrow source will have properties similar to the native SWMU 16 surface/subsurface soils. These soils will be subject to analytical testing by the Contractor to assure the material satisfies the following requirements:

- TPH-DRO, EPA SW-845 8015M DRO - less than 1 part per million (ppm)
- TPH-GRO, USEPA SW-845 8015M GRO - less than 1 ppm
- Sum of benzene, toluene, ethylbenzene, and xylenes, USEPA SW-846 5030 / 8021 - less than 1 ppm
- Characteristic waste determination (ignitability, corrosivity, reactivity, and toxicity), EPA SW-846 1311 - shall not fail the test for characteristic waste
- Total PCB, USEPA SW-846 8082 - less than 1 ppm.

Additionally, the backfill material shall meet the following physical characteristics for each of the four excavation areas.

Surface/Subsurface Soil Excavation Backfill (to within 6-inches below proposed ground surface elevation) – Backfill soil for the surface/subsurface soil excavation area will be placed in 1-foot thick lifts and compacted by track-walking across the backfilled area with track-type equipment. The backfill material shall meet the following physical characteristics:

- ASTM D 2487, Classifications GW, GP, GM, SW, SP, or SM
- ASTM D 4318, Liquid limit, 35 maximum
- ASTM D 4318, Plasticity index, 12 maximum

- Maximum of 25 percent by weight passing ASTM D 1140, No. 200 sieve
- Maximum particle size of 1 inch

Surface/Subsurface Soil Excavation Backfill (top 6-inches) – The existing surface in the surface/subsurface soil excavation area is covered with either gravel or grass. The top 6 inches of backfill in gravel areas will be AASHTO No. 7 stone compacted using a smooth drum roller or equivalent. The top 6 inches of backfill in vegetated areas will be uncompacted topsoil.

Restoration

The disturbed areas backfilled and regraded as part of the IMWP implementation will be restored and stabilized using permanent stabilization practices. Restoration will consist of surface preparation, fertilizing, seeding, mulching, and stream restoration, where appropriate. Seeding procedures and procedures for associated activities (fertilizing and mulching) are presented in detail in Section 4.4. The following paragraphs describe the restoration activities to be performed at each of the four types of excavation areas.

Surface/Subsurface Soil Excavation Area Restoration – Restoration includes the preparation of gravel and vegetation surfaces. The Contractor will identify the areas that require gravel and vegetation surfaces prior to excavation.

Erosion and Sediment Control

Before excavation activities begin, E&S controls will be established to prevent impacts to surface water downgradient of the disturbance areas, namely Turkey Creek (see Section 4.0). During excavation, backfilling, and restoration operations and until stabilization is achieved, either through placement of biodegradable erosion control matting or vegetation establishment, the E&S controls will be regularly inspected and maintained. E&S control requirements to be complied with during IMWP implementation include the Indiana Storm Water Quality Manual (IDEM, 2007).

Decontamination Pad

A temporary decontamination pad will be set up to clean equipment used to excavate and transport contaminated soils and sediments at an estimated four locations. The pads will be sized to accommodate all the equipment to be used at the site and will be constructed in a manner that contains all the contaminated materials removed from equipment and the liquids used to clean the equipment.

Contaminated materials removed from the equipment will be disposed off-site with the excavated soil. Water from the temporary decontamination pad will be collected for off-site disposal by the EMAC contractor. Additional decontamination pad requirements are discussed in Section 4.5. Care will be taken to keep off-road transport equipment clean to minimize the spread of contaminated soils to areas adjacent to the excavations or other areas within the SWMU. Any soil removal from these areas and the associated disposal and restoration costs will be the responsibility of the Contractor.

Dewatering Pad

If required, a temporary dewatering pad will be set up to dewater soils excavated due to exposure to heavy precipitation events. The dewatering pads will be sized to accommodate excavated soils and loading equipment, as necessary. The dewatering pads will be constructed in such a manner that will retain all materials while allowing the water to drain by gravity from the soils and be collected in a sump. The water will then be filtered to remove any remaining soils. Following the filtering of the water, it will be sampled for characterization and staged for eventual offsite disposal. In addition, the dewatering pad will be constructed to allow for the loading of dewatered soil materials into the trucks for transport to the NSA Crane-approved off-site disposal facility.

The EMAC will make every effort to prevent or minimize the excavation of soil requiring dewatering. Excavation activities will cease during heavy rain events and excavations will be covered to prevent or reduce the accumulation of excess water. If the EMAC fails to show due diligence to prevent or reduce the accumulation of excess water, then the cost of the management and disposal of the water will be borne by the EMAC. Additional dewatering pad requirements are discussed in Section 4.5.

Clearing

Although extensive vegetation clearing is not anticipated, some limited clearing will be required to permit access to the southernmost soil metals removal area. Vegetation clearing will be kept to a minimum to minimize impacts to natural habitat and in accordance with the woody vegetation removal limitations described in Section 3.5.2. Cleared vegetation will be chipped and disposal will be at the direction of the OICC. Standing trees (of specified species and sizes) will not be removed from April 1 through September 30 to comply with Indiana bat regulations, as addressed in Section 3.5.2.

3.3 SEQUENCE OF IMWP IMPLEMENTATION

The generalized sequence of construction activities is presented below. This sequence of construction is subject to change based on the Contractor's work plan and the Navy's selected construction approach.

1. Hold a pre-IMWP implementation meeting with the NSA Crane OICC, Contracting Officer, IM Contractor, and Tetra Tech representative, at a minimum.

2. Inspect and photograph SWMU 16 to verify existing site conditions, all utility locations, and obtain all required permits.

3. Install perimeter controls Erosion and Sediment Control Plan (Section 4.0). Maintain all perimeter controls during excavation and restoration activities.

4. Clear areas for support features including, but not limited to, the decontamination pad, materials storage area, and potential dewatering pad. Construct the support features as needed in work areas.

5. UST wastewater removal, excavate UST, and remove UST. Verify that UST piping is capped (when left in place) and/or remove piping within areas targeted for soil removal. The Contractor will make the effort to determine the origination points for piping around the UST excavation to improve the understanding of the UST's purpose. Following removal of tank water and UST removal from the subgrade location; restore the disturbed UST excavation area as required. Collect tank water disposal characterization samples from recovered waters. Following disposal characterization, load and transport water to the NSA Crane-approved off-site disposal facility.

6. Settling tank excavation and removal. Pump out settling tank water for staging and collect water samples for laboratory analysis and characterization. Laboratory results will support proper management of settling tank water for offsite disposal. Following the removal of settling tanks, restore the disturbed excavation areas as required. Verify piping is capped when left in place and remove piping within areas targeted for soil removal (settling tank piping north and west of Building 146 will be removed). Following loading operations, transport settling tanks and piping debris to the NSA Crane-approved off-site disposal facility.

7. Excavate TCE Contaminated Areas from Northern TCE Areas and the Southern TCE Area adjacent to Building 146. Continuous backfill shall be employed during soil excavation as much as is practical to reduce the amount of open excavations. Following the excavation and removal of TCE-contaminated soils, restore the disturbed excavation areas as required. Collect disposal characterization samples from the excavation soils. Following disposal characterization, load and transport soils to the NSA Crane-approved off-site disposal facility.

8. Excavate the three Metals Contaminated Areas soil from south of Building 146. Continuous backfill shall be employed during soil excavation as much as is practical to reduce the amount of open excavations. Following removal of contaminated soil areas, restore the disturbed excavation areas as required and collect disposal characterization samples from the excavated soils. Following disposal characterization, load and transport soils to the NSA Crane-approved off-site disposal facility.

9. Following transportation and disposal of all excavated surface/subsurface soil and debris, remove the dewatering pad (if necessary), decontamination pad, and materials storage area, and collect verification samples from within the footprint of the support features. Following verification that the ground beneath these support features were not impacted by construction activities, regrade as necessary and establish permanent stabilization.

10. Following permanent stabilization of all disturbed areas, and with the approval of the OICC, remove all remaining perimeter controls and immediately stabilize all remaining disturbed areas.

3.4 STORMWATER POLLUTION PREVENTION

The SWMU 16 ground surface hydrology, grading, and cover will not be altered due to IMWP implementation activities. Pre- and post-development runoff from the limits of disturbance will be the same; therefore, additional stormwater detention capacity is not required.

The full disturbed soil removal area will be approximately 0.56 acres. If the total disturbed area for construction of the access road for M-3 will be less than approximately 0.4 acres then the preparation of an IDEM Storm Water General Permit should not be required for this activity (stormwater permits are required for disturbances greater than 1 acre). However, if the area to be disturbed during the construction of the M-3 access road will be more than 0.45 acres, then the EMAC will be required to prepare an IDEM Storm Water General Permit for this activity. Additionally, IMWP implementation activities require the use of best management practices for E&S control and stormwater pollution prevention as described in Section 4.0.

3.5 OTHER IMWP IMPLEMENTATION REQUIREMENTS

3.5.1 Utilities

The Contractor is required to verify all utility locations and adequately protect any utilities located in the active work areas before any earth-disturbing activities begin (Figures 3-1 and 3-3). Potable water for

project personnel and equipment decontamination will be provided by NSA Crane. Any piping related to the settling tanks proposed for removal will be plugged/capped and left in place, except in excavation areas where it will be removed and disposed. The Contractor will make the effort to determine the origination points for piping around the UST excavation to improve the understanding of the UST's purpose.

3.5.2 Protection of Natural Resources

Threatened and endangered species or species of special concern protected under Indiana or Federal regulations exist or may exist in SWMU 16 and will be protected. Protected bird species that may use SWMU 16 as part of their home ranges include the bald eagle, osprey, sharp-shinned hawk, red-shouldered hawk, broad-winged hawk, black and white warbler, hooded warbler, and the worm-eating warbler (B&RE, 1997). Also, the Indiana bat, a federal endangered species, is known to forage at NSA Crane. During the spring and summer, Indiana bats roost in trees and forage for insects primarily in riparian and upland forests. The most important characteristic of roost trees is thought to be structural-exfoliating bark with space for bats to roost between the bark and the bole of the tree. To a limited extent, tree cavities and crevices are also used for roosting. Although, extensive tree removal is not anticipated, there may be some limited vegetation removal required in order to access the southernmost soil removal area to address metals contamination. When vegetation removals are necessary, the Contractor will comply with the requirements presented here.

In 1997, NSA Crane received a letter from the United States Fish and Wildlife Services (USFWS) stating that, in their opinion, NSA Crane had an abundance of Indiana bat habitat and that any activity that would result in the clearing of woody vegetation may affect the Indiana bat and would require consultation under the Endangered Species Act (ESA). The USFWS recommended interim guidelines for protecting Indiana bats and their habitat from silvicultural activities, and these recommendations were immediately implemented by NSA Crane under the timber management program.

Because of the Indiana bat and its potential habitat, the cutting of trees at NSA Crane is restricted to certain times during the year, and the cutting of shagbark hickory trees (potential Indiana bat habitat) is prohibited. A summary of Indiana bat-related restrictions prepared by the NSA Crane Natural Resources Office (i.e., “bat primer”) is as follows:

- Woody vegetation that is 5 inches in diameter or greater at 4.5 feet above the ground surface may not be removed from April 1 through September 30.

- Standing dead trees may not be removed from April 1 through September 30.

- Timber harvesting may occur after September 30 and before April 1 without a case-by-case consultation provided the interim guidelines for silvicultural treatment issued to the NSA Crane Natural Resources Office by the USFWS are followed.

- During emergency situations, necessary and prudent tree removal is allowed at all times without consultation. However, the contractor will still need to seek the approval of the NAVFAC Crane Natural Resources Office.

- Tree removal from residential settings and industrial areas for safety reasons is allowed during the period of April 1 and September 30 without further consultation. This includes tree trimming.

- Tree removal within 25 feet of railroad tracks and within 50 feet of explosive storage and explosive operating buildings is allowed during the period of April 1 and September 30 without further consultation.

- Brush clearing of woody vegetation less than 3 inches in diameter at 4.5 feet above the ground may occur at any time of the year without consultation.

- All other tree removal or clearing projects not covered above must be submitted to the USFWS for informal consultation on a case-by-case basis.

3.5.3 Traffic Control Plan

Access to NSA Crane is via four gates: the Main Gate referred to as the Bloomington Gate (Gate House No. 1) in the north, Burns City Gate (Gate House No. 2) in the west, Bedford Gate (Gate House No. 3) in the east, and Crane Gate (Gate House No. 4) in the northwest. NSA Crane will be accessed by the Contractor only through the Crane Gate. All vehicles will pass through the Crane Gate via the traffic routing plan shown on Figure 3-4. The Contractor is not permitted to travel within restricted areas of the facility. All waste hauling vehicles will be weighed upon arrival and at time of departure using the certified weight scale located at the Defense Reutilization and Marketing Office (DRMO) (Building 1940). The DRMO scale is operated during normal business hours, and weight tickets are available. All waste hauling trucks shall record both empty and loaded weights for each trip.

3.5.4 Contractor Requirements

The Contractor will be required to perform all IMWP implementation activities in accordance with the Contractor's Basic Contract, NSA Crane Contractor's Operations Manual (NSWC Crane, 2002), and supplemental specifications provided in Appendix E.

The IWMP will be implemented by the Contractor, NSA Crane, and Tetra Tech, with work assignments summarized in Table 3-1.

3.6 IMPLEMENTATION

The Contractor will coordinate all field work through the OICC.

IMWP implementation may be impacted by NSA Crane activities and the facility's "Protective Measures". NSA Crane will implement a corresponding set of "Protective Measures" based on the warnings provided by the Homeland Security Advisory System in the form of graduated "Threat Conditions." The Contractor will be subject to any implemented "Protective Measures."

The Navy will provide a full-time oversight representative during IMWP implementation.

TABLE 3-1

WORK ASSIGNMENT RESPONSIBILITY CHART
INTERIM MEASURES WORK PLAN SWMU 16
CAST HIGH EXPLOSIVES FILL/BUILDING 146 INCINERATOR
NSA CRANE
CRANE, INDIANA

WORK ITEM	CONTRACTOR	NSA CRANE	Tetra Tech
Pre-IMWP Implementation Meeting	X	X	X
Interim Measure Implementation	X		
Contractor Work Plan (1)	X		
Site Specific Health and Safety Plan / Activity Hazard Analysis	X		
Project Quality Control Plan	X		
Surveying and marking of excavation node			X
Environmental Conditions Report	(2)		X
Permits			
- Safety & Building Availability Permit (ESO 8020/11)	X		
- Digging Permit (NWSCC 11000/3)	X(3)		
- Flame Tool / Hot Work Permit (NWSCC 11320)	X		
- IDEM Storm Water General Permit			X
Field Work Reports and Submittals (4)	X		
Sampling and Analysis	X(6)		X(5)
Wastewater Disposal (Decontamination Water)	X		
CTO Closure Report	X(6)		X

NOTES:

1. Contractor Work Plan includes, but is not limited to, an excavation and handling plan, waste management plan, environmental protection plan, erosion and sediment control plan, stormwater pollution prevention plan, sampling plan, and transportation and disposal plan.
2. Contractor will participate in documenting environmental conditions before, during, and after implementation of the interim measures.
3. Contractor completes the permit form.
4. Contractor will furnish items identified in the Basic Contract, NSA Crane Contractor's Operations Manual, and the Supplemental Specifications provided in Appendix E.
5. Contractor will be responsible for the collection of characterization samples required for off-site disposal of excavated surface soils. Contractor will be responsible for collection, storage, characterization, and discharge of wastewater to the NSA Crane approved stabilized drainage channel, storm drain, or wastewater treatment plant. Contractor will be required to characterize backfill materials.
6. Contractor will furnish items identified in the Supplemental Specifications provided in Appendix E.

CTO - Contract Task Order
IMWP - Interim Measures Work Plan
NSA - Naval Support Activity
Tetra Tech - Tetra Tech, Inc.
X – Indicates responsible party

Table 3-2
Excavation Nodes for SWMU 16 Interim Measures
NSA Crane, Indiana

SWMU 16 Excavation Site	Easting	Northing	Node Label
SWMU 16 - NORTHERN TCE AREA-West	3032580.03	1321101.04	1
SWMU 16 - NORTHERN TCE AREA-West	3032644.28	1321140.78	2
SWMU 16 - NORTHERN TCE AREA-West	3032662.07	1321152.09	3
SWMU 16 - NORTHERN TCE AREA-East	3032689.68	1321165.83	4
SWMU 16 - NORTHERN TCE AREA-East	3032691.92	1321170.90	5
SWMU 16 - NORTHERN TCE AREA-East	3032702.27	1321209.65	6
SWMU 16 - NORTHERN TCE AREA-East	3032688.10	1321254.35	7
SWMU 16 - NORTHERN TCE AREA-East	3032670.31	1321251.76	8
SWMU 16 - NORTHERN TCE AREA-East	3032659.65	1321245.94	9
SWMU 16 - NORTHERN TCE AREA-West	3032629.72	1321237.09	10
SWMU 16 - NORTHERN TCE AREA-West	3032623.40	1321227.73	11
SWMU 16 - NORTHERN TCE AREA-West	3032616.97	1321229.60	12
SWMU 16 - NORTHERN TCE AREA-West	3032593.69	1321226.54	13
SWMU 16 - NORTHERN TCE AREA-West	3032585.73	1321210.20	14
SWMU 16 - NORTHERN TCE AREA-West	3032606.25	1321182.12	15
SWMU 16 - NORTHERN TCE AREA-West	3032609.19	1321165.68	16
SWMU 16 - NORTHERN TCE AREA-West	3032619.19	1321141.61	17
SWMU 16 - SOUTHERN TCE AREA	3032580.03	1321101.04	1
SWMU 16 - SOUTHERN TCE AREA	3032644.28	1321140.78	2
SWMU 16 - SOUTHERN TCE AREA	3032662.07	1321152.09	3
SWMU 16 - SOUTHERN TCE AREA	3032714.28	1321021.70	4
SWMU 16 - SOUTHERN TCE AREA	3032698.46	1321005.76	5
SWMU 16 - SOUTHERN TCE AREA	3032675.98	1321018.61	6
SWMU 16 - SOUTHERN TCE AREA	3032654.37	1321011.66	7
SWMU 16 - SOUTHERN TCE AREA	3032633.83	1321033.77	8
SWMU 16 - SOUTHERN TCE AREA	3032626.49	1321048.93	9
SWMU 16 - SOUTHERN TCE AREA	3032591.38	1321070.18	10
SWMU 16 - M1	3032904.47	1320768.93	1
SWMU 16 - M1	3032900.41	1320771.62	2
SWMU 16 - M1	3032853.05	1320755.44	3
SWMU 16 - M1	3032864.85	1320719.46	4
SWMU 16 - M2	3032816.48	1320690.29	1
SWMU 16 - M2	3032816.48	1320672.28	2
SWMU 16 - M2	3032834.48	1320659.14	3
SWMU 16 - M2	3032848.33	1320653.40	4
SWMU 16 - M2	3032881.95	1320670.51	5
SWMU 16 - M2	3032850.36	1320685.59	6
SWMU 16 - M3	3033068.76	1320594.47	1
SWMU 16 - M3	3033062.07	1320582.89	2
SWMU 16 - M3	3033053.17	1320557.63	3
SWMU 16 - M3	3033060.05	1320523.83	4
SWMU 16 - M3	3033083.59	1320516.20	5
SWMU 16 - M3	3033102.70	1320528.09	6
SWMU 16 - M3	3033130.17	1320552.56	7
SWMU 16 - M3	3033123.68	1320578.07	8
SWMU 16 - M3	3033113.43	1320601.77	9

PGH P:\GIS\CRANE_NSWC\MAPDOCS\MXD\SWMU16_EXCAVATION_NODES_V2.MXD 04/05/13 SP

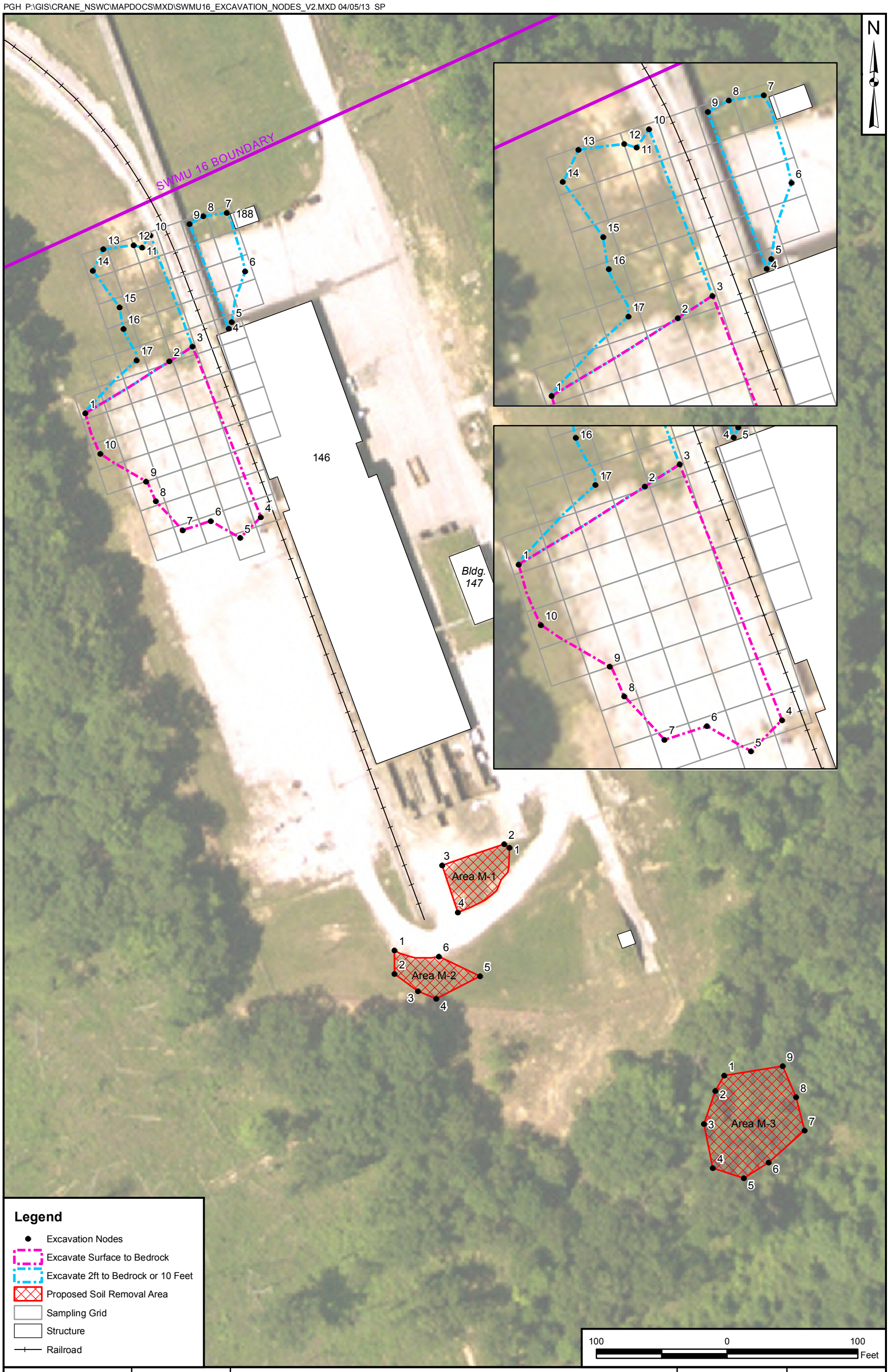

DRAWN BY	DATE
J. NOVAK	01/14/13
CHECKED BY	DATE
J. DUCAR	04/05/13
REVISED BY	DATE
S. PAXTON	04/05/13
SCALE	
AS NOTED	

NAVFAC

SOIL EXCAVATION NODES
SWMU 16 - CAST HIGH EXPLOSIVES FILL/BLDG. 146 INCINERATOR
NSA CRANE
CRANE, INDIANA

CONTRACT NUMBER	CTO NUMBER
02127	F277
APPROVED BY	DATE
—	—
APPROVED BY	DATE
—	—
FIGURE NO. 3-1	REV 0

PGH P:\GIS\CRANE_NSWC\MAPDOCS\MXD\SWMU16_EXCAVATION_DIAGRAM_B.MXD 04/30/13 SP

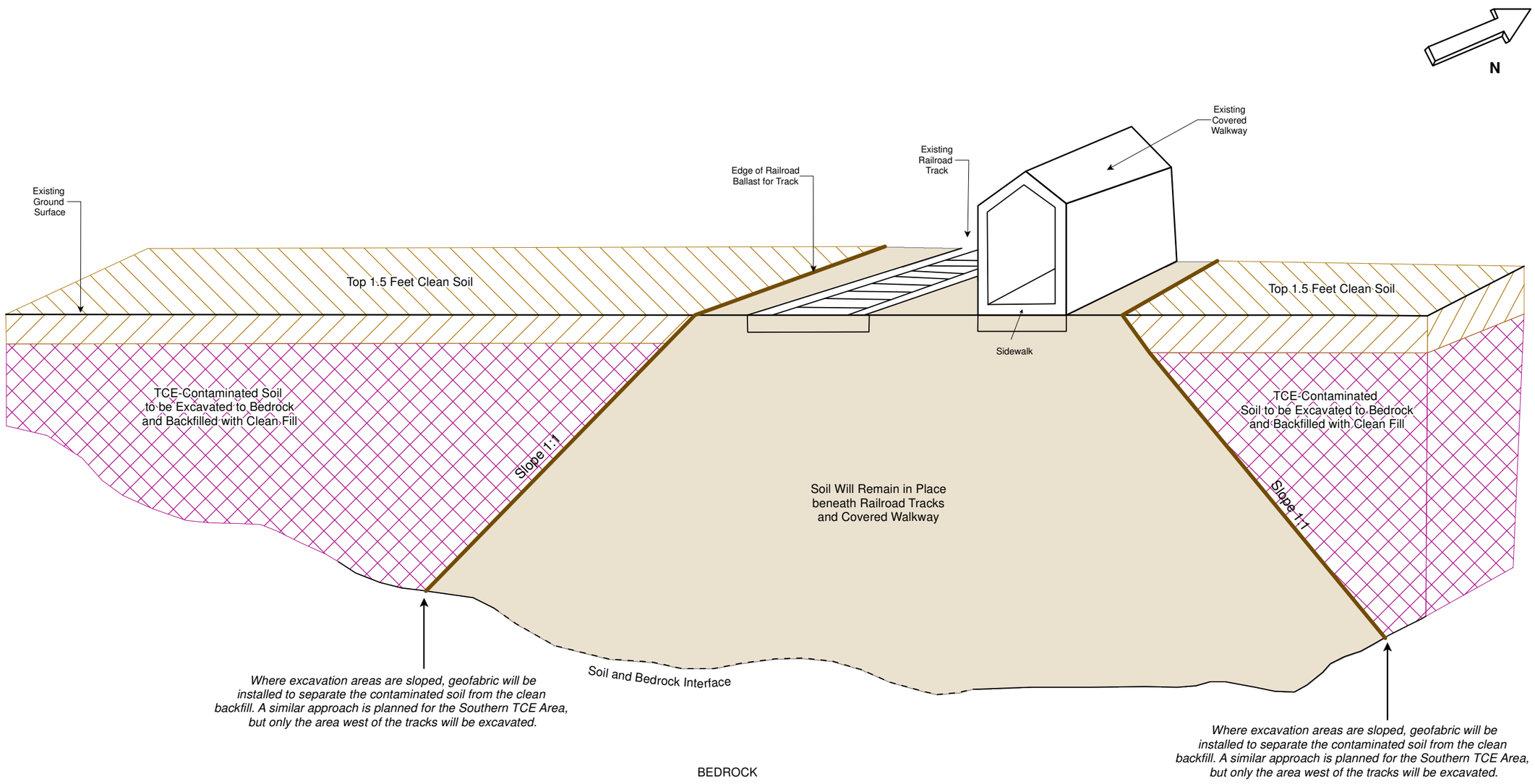

NOT TO SCALE

CONTRACT NUMBER N62470-08-0-1001	CTO NUMBER F277
APPROVED BY	DATE
APPROVED BY	DATE
FIGURE NO. 3 - 2	REV 0

SOIL EXCAVATION APPROACH - NORTHERN TCE AREA
SWMU 16 - CAST HIGH EXPLOSIVES FILL/B146 INCINERATOR
NSA CRANE
CRANE, INDIANA

DRAWN BY S. PAXTON	DATE 04/11/13
CHECKED BY R. BARRINGER	DATE 04/30/13
REVISED BY S. PAXTON	DATE 04/30/13
SCALE NOT TO SCALE	

PGH P:\GIS\CRANE_NSWC\MAPDOCS\MXD\SWMU16_BLDG146_DIGSAFE_V2.MXD 04/29/13 SP

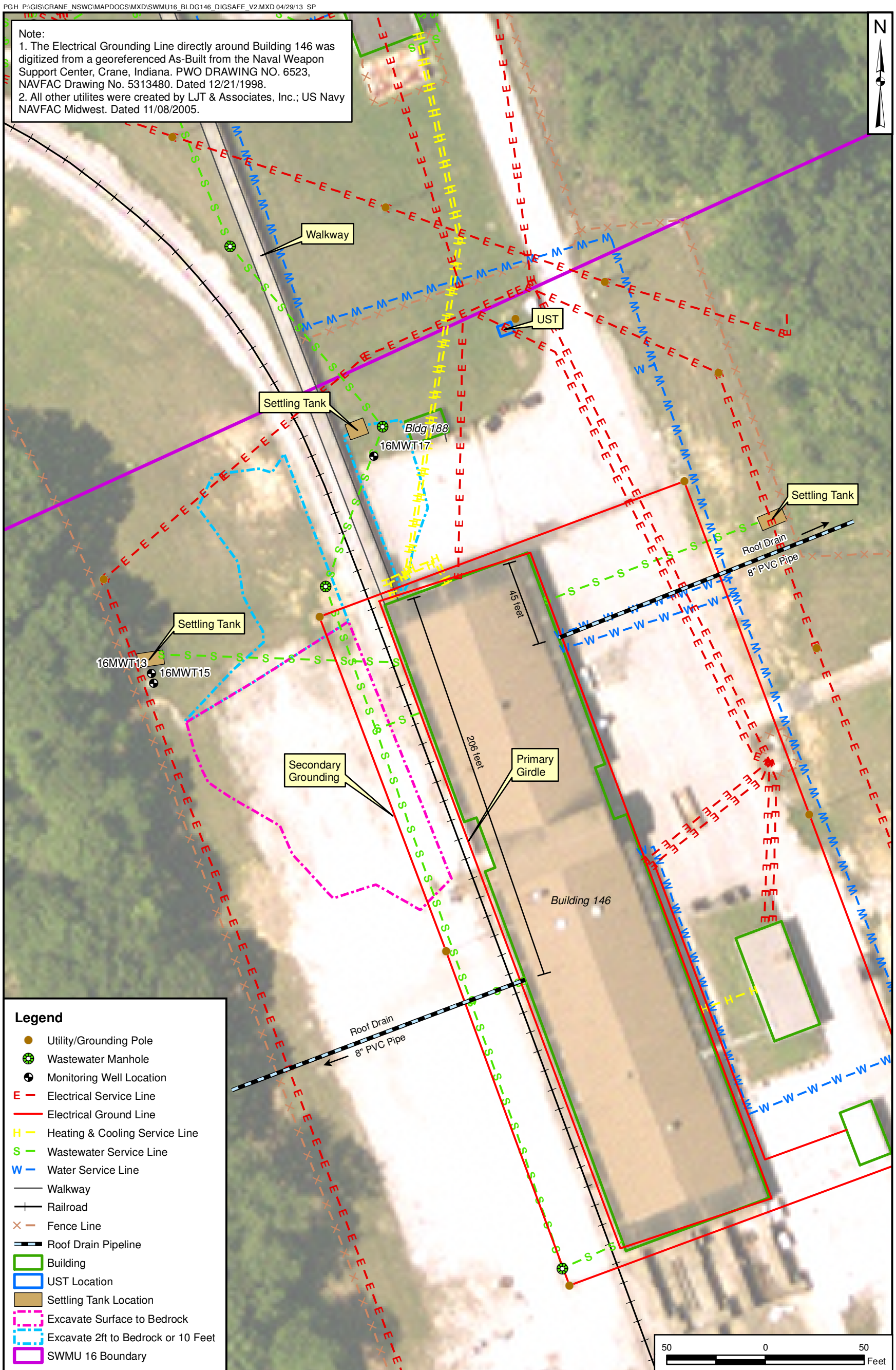

DRAWN BY	DATE
J. NOVAK	02/06/13
CHECKED BY	DATE
R. BARRINGER	04/29/13
REVISED BY	DATE
S. PAXTON	04/29/13
SCALE	
AS NOTED	

NAVFAC

SITE INFRASTRUCTURE LAYOUT AND
TCE SOIL EXCAVATION LIMITS
SWMU 16 CAST HIGH EXPLOSIVES FILL /
BLDG 146 INCINERATOR
NSA CRANE
CRANE, INDIANA

CONTRACT NUMBER	CTO NUMBER
—	CTO F277
APPROVED BY	DATE
—	—
APPROVED BY	DATE
—	—
FIGURE NO.	REV
3-3	0

PGH P:\GIS\CRANE_NSWC\MAPDOCS\MXD\SWMU16_TRAFFIC_CONTROL_PLAN.MXD 04/12/13 SP

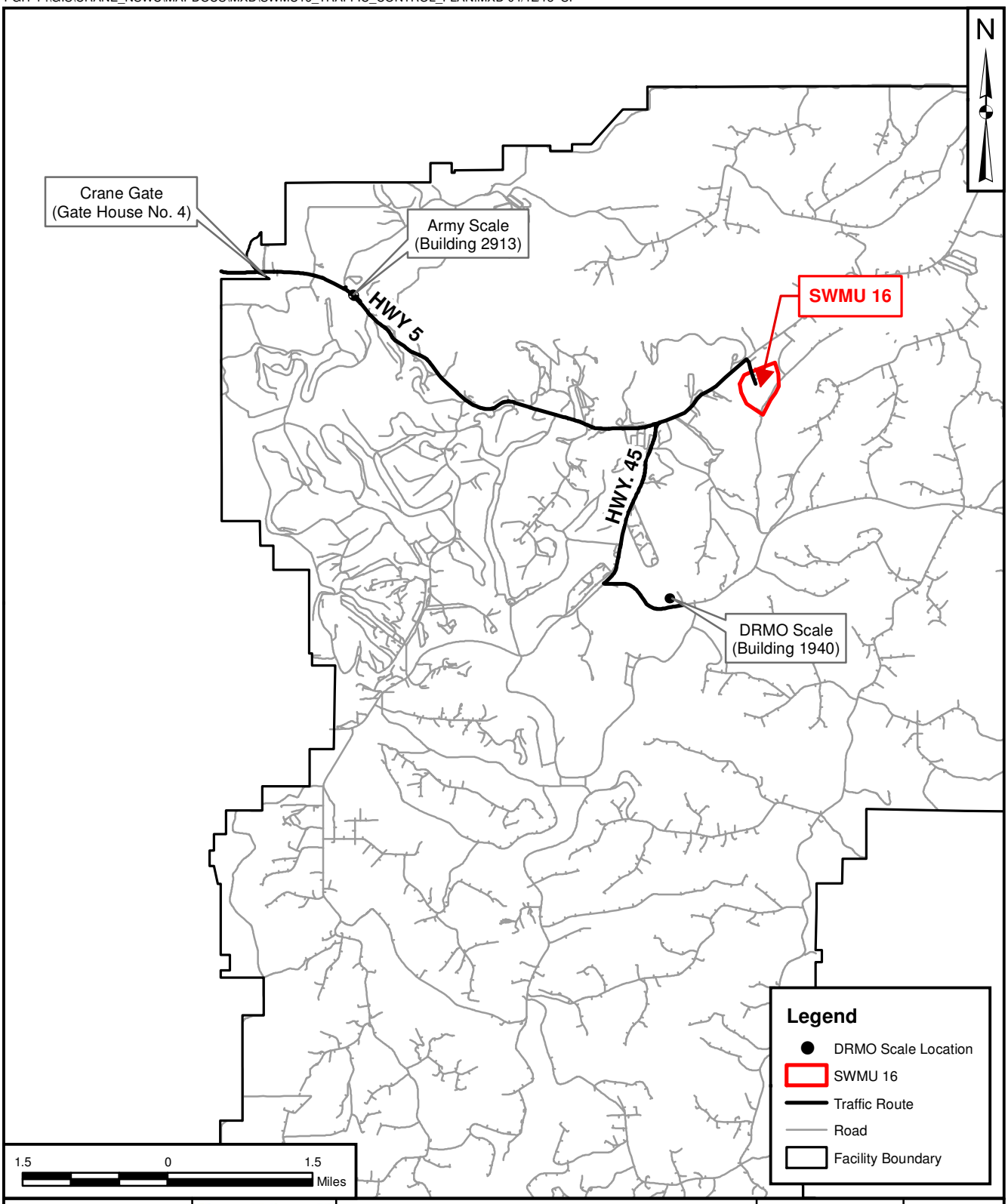

DRAWN BY	DATE
S. PAXTON	01/04/13
CHECKED BY	DATE
R. BARRINGER	04/12/13
REVISED BY	DATE
S. PAXTON	04/12/13
SCALE AS NOTED	

NAVFAC

TRAFFIC CONTROL PLAN
SWMU 16 – CAST HIGH EXPLOSIVES FILL
BUILDING 146 INCINERATOR
NSA CRANE
CRANE, INDIANA

CONTRACT NUMBER	CTO NUMBER
2127	F277
APPROVED BY	DATE
___	___
APPROVED BY	DATE
___	___
FIGURE NO.	REV
3-4	0

4.0 EROSION AND SEDIMENT CONTROL PLAN

4.1 PURPOSE

The purpose of this section is to provide the steps that will be taken to minimize and/or eliminate erosion and sedimentation during the implementation of the IMWP at SWMU 16. The E&S control plan has been developed in accordance with the guidelines defined in the Indiana Storm Water Quality Manual (Handbook) (IDEM, 2007). The E&S control devices described in this text can be modified based on construction equipment and techniques presented in the Contractor's Work Plan. Selected E&S control devices must be identified in the E&S Control Plan submitted with the Contractor Work Plan. After the E&S Control Plan is approved, no changes can be made without approval by the OICC.

The Contractor should note that this E&S Control Plan assumes that all elements of the SWMU 16 removal action will occur at one time. In the event the Navy elects to phase the construction activities at SWMU 16, all of the E&S Controls identified in this plan may or may not be required. The Contractor must identify the E&S Controls required for the construction activities identified in their work plan.

4.2 EROSION AND SEDIMENT CONTROL REQUIREMENTS

E&S control measures are implemented to reduce or eliminate erosion and sedimentation of soils that would be detrimental to surface water quality. Surface drainage at SWMU 16 flows into drainage ditches and culverts that flow into unnamed intermittent streams that discharge to Turkey Creek. The eastern portion of SWMU 16 drains into drainage ditches that flow to the east and then to the southeast. These drainage ditches discharge to Turkey Creek at locations approximately 1,500 ft east and 1,500 ft southeast of Building 146.

The western portion of SWMU 16 drains into drainage ditches that flow to the west for approximately 500 ft before entering an unnamed intermittent stream. The intermittent stream flows to the south and then to the southeast before it discharges to Turkey Creek approximately 2,000 ft south-southeast of Building 146. The elevation of Turkey Creek at this location is approximately 575 ft amsl. The drainage ditches are usually dry and are typically only wet during and immediately after rainfall. Figure 4-1 presents the surface water drainages in the vicinity of SWMU 16.

Turkey Creek discharges into Boggs Creek, which discharges into Lake Gallimore, located approximately 17 miles southwest of SWMU 16 at its closest point. Lake Gallimore discharges to a tributary of the Wabash River.

IMWP implementation activities for SWMU 16 consist of excavation and off-site disposal of VOC-contaminated (including TCE) and metals-contaminated (including lead, antimony, copper and zinc) soils and debris, backfilling excavations, and restoration of disturbed areas. Surface and subsurface soil will be excavated from several areas located within SWMU 16.

Considering the type of IMWP activities and access issues, the proposed E&S control measures include the following:

- Silt Fence – Placed along the downslope sides of the surface soil excavation areas and the gravel construction entrances to provide a temporary sediment barrier. Silt fencing consists of synthetic filter fabric and wooden posts.

- Gravel Construction Entrances – Placed as a controlled site entrance to reduce the amount of sediment transported by construction vehicles onto facility and public roads.

- Dust Control – Utilized to prevent surface and air movement of dust from exposed soil surfaces and to reduce the amount of airborne substances that may present health hazards, traffic safety problems, or harm plant/animal life.

- Permanent Seeding – Utilized to establish perennial vegetation on disturbed areas by planting seeds of native grasses.

The construction, implementation, and maintenance of these E&S control devices will be in accordance with the Handbook. Figures 3-1 and 3-3 present the proposed excavation areas. Figures 4-2 and 4-3 present typical details of the E&S control devices proposed for the IMWP implementation (i.e., silt fence, gravel construction entrance, and in-stream sediment trap). Permanent seeding is discussed in Section 4.4. Dust control will be addressed in the Contractor's Work Plan. All E&S controls will remain in place until all upstream areas have been stabilized. Stabilization will be determined by the OICC.

4.3 INSPECTION AND MAINTENANCE OF EROSION AND SEDIMENT CONTROLS

In general, all E&S control measures will be checked daily and after each runoff-producing rainfall event. Any required repairs will be made immediately. The following items will be checked:

- The construction entrance will be maintained in a condition that will minimize tracking sediment onto facility or public roads.

- Silt fence will be checked for undermining or deterioration of the fabric. Sediment will be removed when the level of sediment causes bulging or reaches one-half of the fabric height.

- Seeded areas will be checked regularly to ensure that a good growth of vegetation is maintained and these areas will be fertilized and reseeded, as needed.

- The fuel and lubricant materials storage area will be checked to ensure that stored containers are not leaking and that the lining system is functioning properly.

All E&S control devices will be inspected and maintained until the OICC has formally accepted the permanent stabilization of the disturbed areas. The Contractor will maintain a logbook of all E&S control device inspections and maintenance. This logbook will be available at the site at all times for inspection by duly authorized officials including NSA Crane personnel and the IDEM.

4.4 SITE RESTORATION

All areas disturbed by the IMWP implementation activities (excavation and support facility areas) will be restored and stabilized using soil, gravel, and permanent seeding. Activities to establish permanent stabilization will be implemented as soon as possible following the establishing of final grades. The establishment of permanent vegetation includes site/seed bed preparation, seeding, and mulching of the following locations:

- Surface soils below support facilities
- Surface soil excavation areas that extend beyond existing gravel paved areas

The procedures and requirements for permanent seeding activities are presented in Section 3.12 of the Handbook. The seed mixture recommended for use at SWMU 16 is a standard Indiana seed mixture for open and disturbed areas. The seed mixture includes perennial ryegrass and tall fescue. Planting rates and optimum soil pH for this mixture are presented in Exhibit 3.12-C of the Handbook. Following seeding, the seeded areas will be covered with temporary erosion control matting (e.g., coconut fiber matting) to provide additional stabilization until vegetation is established. In the event that disturbed areas are brought to final grade outside of the optimal growing season for the permanent seed mixture, the disturbed areas will be temporarily stabilized using a temporary seed mixture. The procedures and

requirements for establishing temporary stabilization are presented in Section 3.11 of the Handbook. As indicated in the Handbook, E&S control devices will remain in place until permanent stabilization is established over the disturbed areas. Therefore, E&S control devices will not be removed by the Contractor until directed by the OICC.

4.5 RESPONSE PROCEDURES FOR SPILL MITIGATION

Potential non-stormwater discharges anticipated during IMWP implementation activities include dewatering liquids, wash water resulting from decontamination efforts associated with field equipment and vehicles, fuel and lubricant spills from vehicle fueling, lubrication, and maintenance, and spills of fertilizers and small quantities of laboratory chemicals used in sample collection, and other flammable substances.

All decontamination wash water will be collected in a lined decontamination and equipment wash pad area. All waters generated from decontamination and/or other washing activities will be collected, characterized, and properly managed by the EMAC contractor. The water from the temporary decontamination pad will be collected for off-site disposal by the EMAC contractor. All vehicle fueling, lubrication, and maintenance will be performed utilizing drip pans to contain any spills that may occur or within the decontamination pad to contain spills. Containers of detergents and vehicle maintenance fluids (e.g., oil, grease, antifreeze, hydraulic fluid, etc.) will be stored within an enclosed, lined, diked area along with the equipment fuel, which is stored in tanks. This area, referred to as the materials storage area, will be bermed and lined with a 60-mil low-density polyethylene (LDPE) geomembrane and will be sized to contain 110 percent of the volume stored within the area. A small sump, or low point in the liner, will be designed to serve as a collection and monitoring point for any leaks or spills from the containers stored within the materials storage area. When not in use, chemicals, paints, and other flammable substances will be stored in a flammable storage cabinet located within the Contractor's equipment trailer.

Good housekeeping procedures will be followed to reduce risks associated with these materials. These procedures include, but are not limited to, keeping materials in their original containers whenever possible, maintaining original labels and Material Safety Data Sheets (MSDSs), and using proper disposal methods for surplus materials. Accidental spills that may occur will be contained as appropriate for the spilled medium (liquid or solid) and collected and containerized immediately after discovery of the spill. Containerized material will be characterized for off-site transportation and disposal. The following spill mitigation equipment should be available on site during construction activities:

- Drip pans
- Oil-dry or similar compound

- Absorbent socks
- Shovels
- 55-gallon drums or storage tank (for containerization)
- Labels for contents identification

Following spill cleanup, the cause of the spill will be investigated, and material storage and handling procedures will be reviewed and revised where appropriate. All spills will be reported to the NSA Crane Environmental Department.

PGH P:\GIS\CRANE_NSWC\MAPDOCS\MXD\SWMU16_SURFACE_DRAINAGE_MAP.MXD 03/25/13 SP

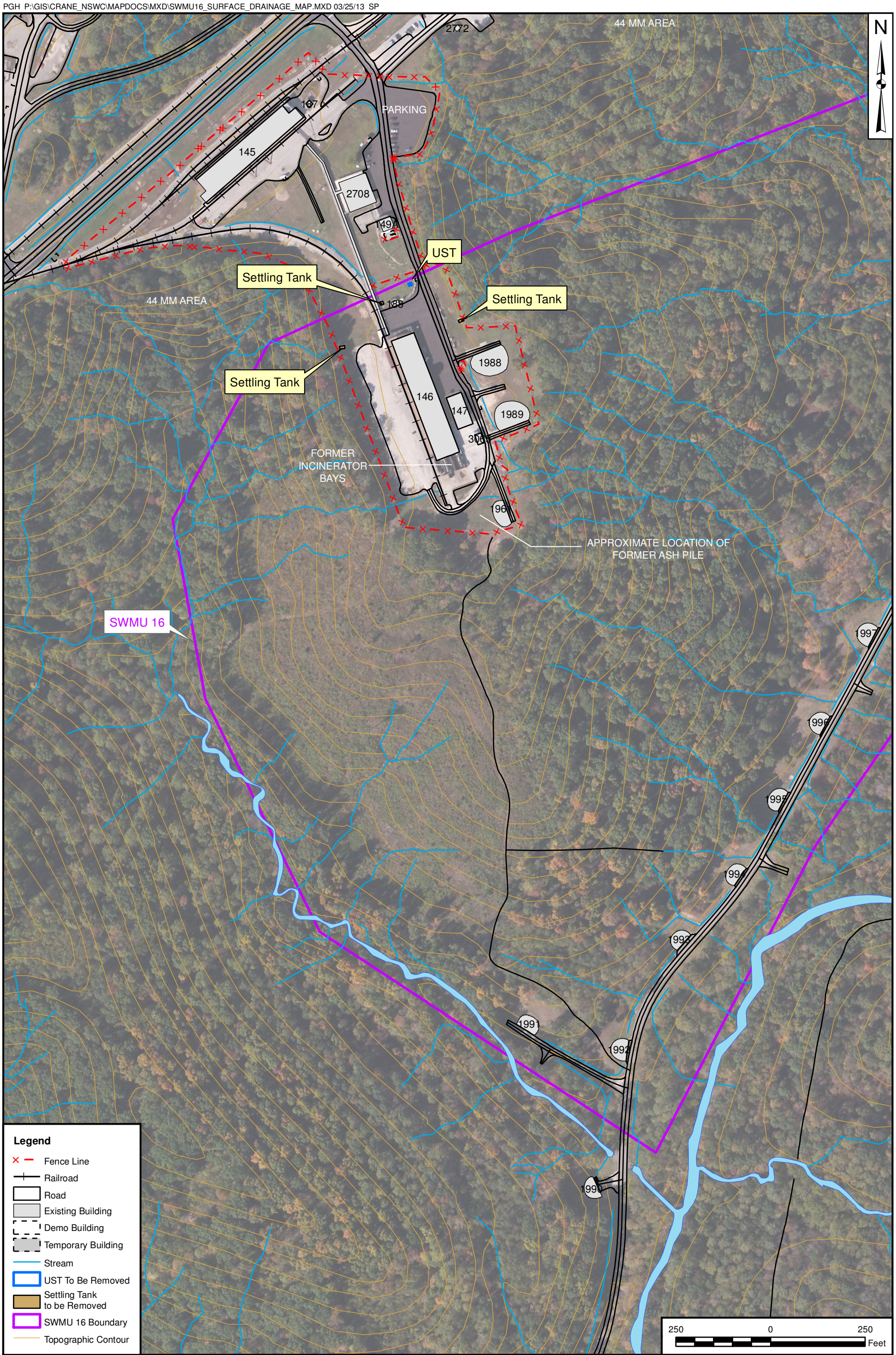

DRAWN BY	DATE
J. NOVAK	02/07/13
CHECKED BY	DATE
R. BARRINGER	03/25/13
REVISED BY	DATE
S. PAXTON	03/25/13
SCALE	
AS NOTED	

NAVFAC

SURFACE WATER DRAINAGE MAP
SWMU 16 - CAST HIGH EXPLOSIVES FILL / B146 INCINERATOR
NSA CRANE
CRANE, INDIANA

CONTRACT NUMBER	CTO NUMBER
02127	F277
APPROVED BY	DATE
—	—
APPROVED BY	DATE
—	—
FIGURE NO.	REV
4 - 1	0

ACAD:0352CD03.dwg 2/7/13 CK PIT

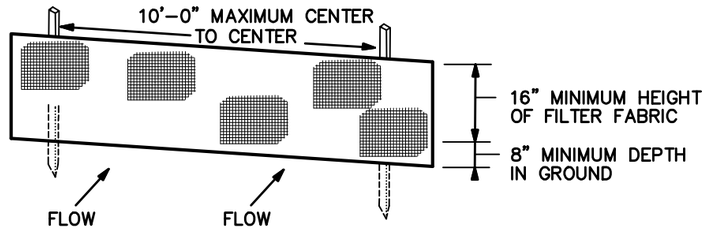

PERSPECTIVE VIEW

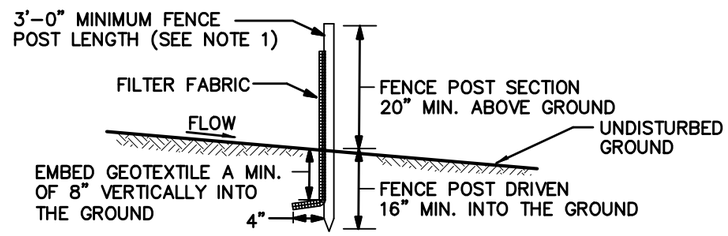

CROSS SECTION

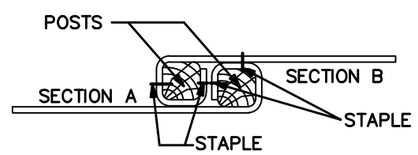

TOP VIEW – JOINING TWO
ADJACENT SILT FENCE SECTIONS

NOTES:

1. WOOD POSTS SHALL BE 1.5" BY 1.5" SQUARE (MIN) CUT OR 1.75" DIAMETER (MIN) ROUND AND SHALL BE OF SOUND QUALITY HARDWOOD. STEEL POSTS WILL BE STANDARD T OR U SECTION WEIGHING NOT LESS THAN 1.00 POUND PER LINEAR FOOT.
2. FILTER FABRIC SHALL BE FASTENED SECURELY TO EACH FENCE POST WITH WIRE TIES OR STAPLES AT TOP AND MID–SECTION.
3. INSTALL SILT FENCE PARALLEL TO THE CONTOUR OF THE LAND.

SILT FENCE

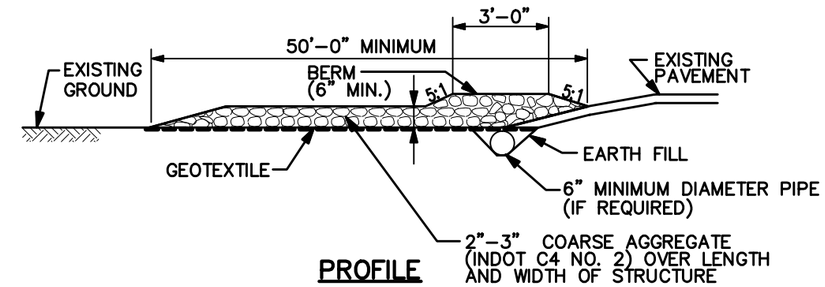

PROFILE

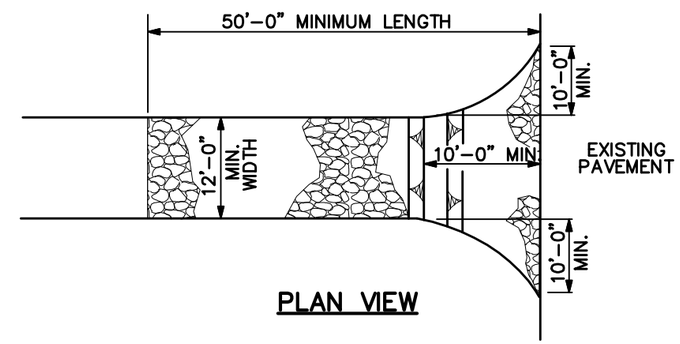

PLAN VIEW

NOTES:

1. ALL SURFACE WATER FLOWING TO OR DIVERTED TOWARD CONSTRUCTION ENTRANCES SHALL BE PIPED THROUGH THE ENTRANCE, MAINTAINING POSITIVE DRAINAGE.
2. IF REQUIRED PIPE SHOULD BE SIZED ACCORDING TO THE AMOUNT OF RUNOFF TO BE CONVEYED. A 6" MINIMUM DIAMETER WILL BE REQUIRED.

GRAVEL CONSTRUCTION ENTRANCE

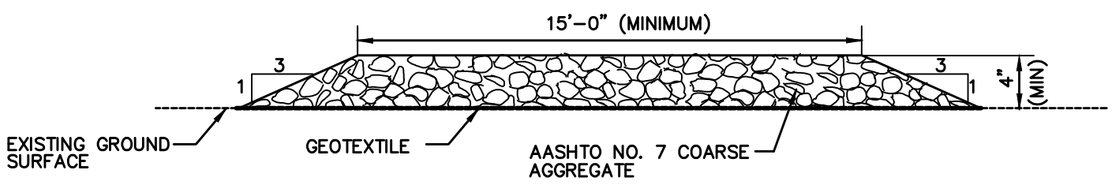

TEMPORARY SITE ACCESS ROAD

NOT TO SCALE

DRAWN BY MF DATE 5/16/06		EROSION AND SEDIMENT CONTROL DEVICES SWMU 16 – CAST HIGH EXPLOSIVES FILL/BUILDING 146 INCINERATOR INTERIM MEASURES WORK PLAN NSA CRANE CRANE, INDIANA	CONTRACT NO. CTO F277
CHECKED BY DATE			OWNER NO.
REVISED BY DATE			APPROVED BY DATE
SCALE AS NOTED	NAVFAC		DRAWING NO. FIGURE 4–2 / REV. 0

FORM CADD NO. TTNUS–BH.DWG – REV 1 – 9/10/98

ACAD:0352CD04.dwg 2/7/13 CK PIT

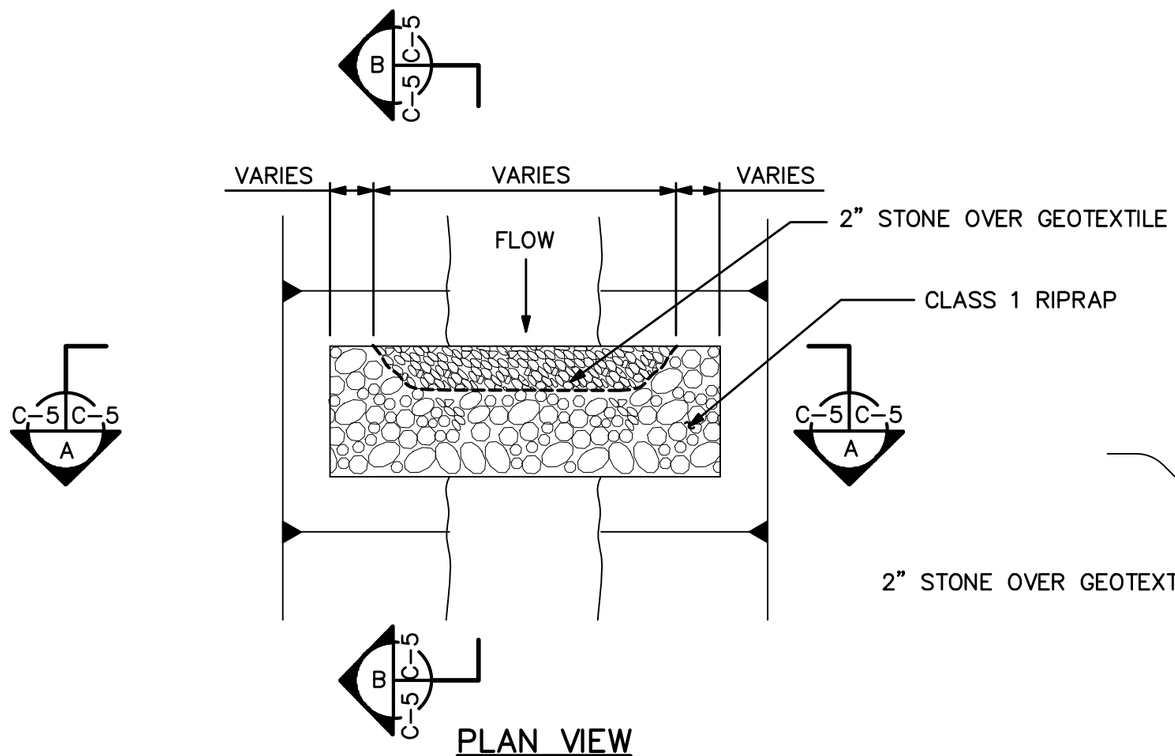

PLAN VIEW

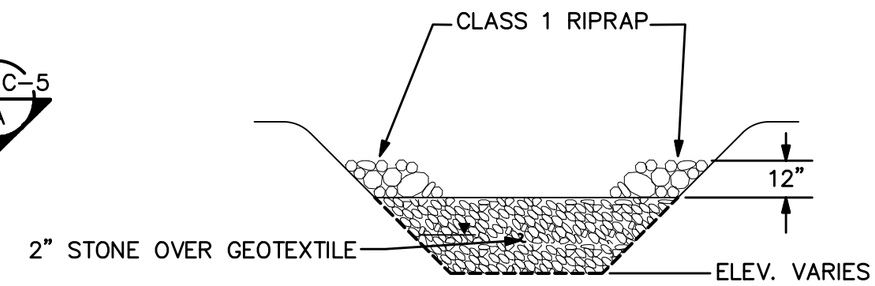

SECTION A–A

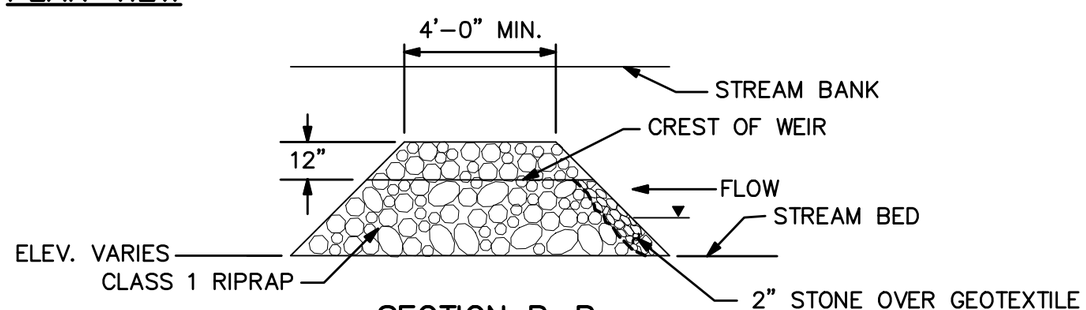

SECTION B–B

NOTE:

1. GABION BASKETS – GABION BASKETS WITH GEOTEXTILE CAN BE USED INSTEAD OF STONE.

IN–STREAM SEDIMENT TRAP

NOT TO SCALE

DRAWN BY MF DATE 5/16/06	NAVFAC	EROSION AND SEDIMENT CONTROL DEVICES (SHEET 2 OF 2) SWMU 16 – CAST HIGH EXPLOSIVES FILL/BUILDING 146 INCINERATOR INTERIM MEASURES WORK PLAN NSA CRANE CRANE, INDIANA	CONTRACT NO. CTO F277
CHECKED BY DATE			OWNER NO.
REVISED BY DATE			APPROVED BY DATE
SCALE AS NOTED			DRAWING NO. FIGURE 4–3 / REV. 0

FORM CADD NO. TTNUS–BH.DWG – REV 1 – 9/10/98

REFERENCES

Army (Department of the Army), 1980. Water Quality Engineering Special Study No. 81-24-8806-80 and Water Quality Biological Study No. 81-24-8807-80, Crane Army Ammunition Activity, Crane, Indiana, 4-14 June 1979. U.S. Army Environmental Hygiene Agency, Aberdeen Proving Ground, Maryland.

B&R Environmental, 1997. Current Contamination Conditions Risk Assessment - SWMU #03/10 (Ammunition Burning Ground), SWMU #07/09 (Old Rifle Range), and SWMU #06/09 (Demolition Range), Naval Surface Warfare Center Crane, Crane, Indiana. Brown and Root Environmental. November.

Halliburton NUS (Halliburton NUS Environmental Corporation), 1992. RCRA Facility Investigation Phase I Environmental Monitoring Reports, Solid Waste Management Units #15/06, #14/00, and #16/16, Naval Surface Warfare Center, Crane Division, Crane, Indiana. Prepared for Northern Division, Naval Facilities Engineering Command, Lester, Pennsylvania. Wayne, Pennsylvania.

IDEM (Indiana Department of Environmental Management), 2007. Indiana Storm Water Quality Manual. Planning and Specification Guide for Effective Erosion and Sediment Control and Post-Construction Water Quality. October. www.idem.IN.gov/stormwater

SAIC (Science Applications International Corporation), 2002a. Annual Groundwater Monitoring Reporting for Ammunition Burning Grounds, Old Rifle Range, and Demo Range, CY 2000, Naval Surface Warfare Center, Crane Division, Crane, Indiana. December 16.

SAIC, 2002b. Annual Groundwater Monitoring Reporting for Ammunition Burning Grounds, Old Rifle Range, and Demo Range, CY 2001, Naval Surface Warfare Center, Crane Division, Crane, Indiana. December 16.

SAIC, 2003a. Annual Groundwater Monitoring Reporting for Ammunition burning Grounds, Old Rifle Range, and Demo Range, CY 2002, Naval Surface Warfare Center, Crane Division, Crane, Indiana. October 31.

SAIC, 2003b. Annual Groundwater Monitoring Reporting for Ammunition burning Grounds, Old rifle Range, and Demo Range, CY 2003, Naval Surface Warfare Center, Crane Division, Crane, Indiana. August 12, 2004.

Tetra Tech (Tetra Tech, Inc.), 2009. Resource Conservation and Recovery Act Facility Investigation Report for Cast High Explosives Fill/B146 Incinerator Geophysical Investigation Report, Naval Surface Warfare Center, Crane, Crane, Indiana, prepared for Naval Facilities Engineering Command South Division, July 23.

Tetra Tech, 2010. Final Monitored Natural Attenuation Report for Cast High Explosive Fill/Building 146 (SWMU 16), Round No. 9, Naval Surface Warfare Center, Crane, Crane, Indiana, prepared for United States Navy, Naval Facilities Engineering Command Midwest, July.

Tetra Tech, 2011. Resource Conservation and Recovery Act Facility Investigation Report for Cast High Explosives Fill/B146 Incinerator (SWMU 16), Naval Surface Warfare Center, Crane, Crane, Indiana. prepared for Naval Facilities Engineering Command Southeast, March.

Tetra Tech, 2012. Revised Draft Soil Delineation Sampling Data Summary Report, SWMU 16 - Cast High Explosive Fill/ Building 146 Incinerator, Naval Support Activity Crane, Crane, Indiana, prepared for United States Navy, Naval Facilities Engineering Command Midwest, December.

Tetra Tech, 2013. Technical Memorandum Ecological Media Cleanup Goals for SWMU 16 Surface Soil, SWMU 16 - Cast High Explosive Fill/ Building 146 Incinerator, Naval Support Activity Crane, Crane, Indiana, prepared for United States Navy, Naval Facilities Engineering Command Midwest, July.

APPENDIX A

LABORATORY DATA

TABLE A-1

SURFACE SOIL SAMPLE DATA
SWMU 16
NSA CRANE
CRANE, INDIANA

LOCATION	16SB001	16SB002	16SB003	16SB004	16SB005	16SB006	16SB034	16SB035	16SB036	16SB037	16SB038
SAMPLE ID	16SS0010002	16SS0020002	16SS0030002	16SS0040002	16SS0050002	16SS0060002	16SS0340002	16SS0350002	16SS0360002	16SS0370002	16SS0380002
SAMPLE DATE	20030327	20030327	20030327	20030327	20030327	20030327	20030409	20030328	20030409	20030328	20030328
ROUND	01	01	01	01	01	01	01	01	01	01	01
EVENT											
SAMPLE CODE	NORMAL	NORMAL	NORMAL	NORMAL	NORMAL	NORMAL	NORMAL	NORMAL	NORMAL	NORMAL	NORMAL
MATRIX	SO	SO	SO	SO	SO	SO	SO	SO	SO	SO	SO
SAMPLE TYPE	NORMAL	NORMAL	NORMAL	NORMAL	NORMAL	NORMAL	NORMAL	NORMAL	NORMAL	NORMAL	NORMAL
SUBMATRIX	SS	SS	SS	SS	SS	SS	SS	SS	SS	SS	SS
TOP DEPTH	0	0	0	0	0	0	0	0	0	0	0
BOTTOM DEPTH	2	2	2	2	2	2	2	2	2	2	2
DIOXINS/FURANS (NG/KG)											
1,2,3,4,6,7,8,9-OCDD						4660					
1,2,3,4,6,7,8,9-OCDF						1.9 UJ					
1,2,3,4,6,7,8-HPCDD						151					
1,2,3,4,6,7,8-HPCDF						0.5 U					
1,2,3,4,7,8,9-HPCDF						0.7 U					
1,2,3,4,7,8-HXCDD						0.6 U					
1,2,3,4,7,8-HXCDF						0.3 U					
1,2,3,6,7,8-HXCDD						0.92 U					
1,2,3,6,7,8-HXCDF						0.3 U					
1,2,3,7,8,9-HXCDD						2.2 J					
1,2,3,7,8,9-HXCDF						0.4 U					
1,2,3,7,8-PECDD						0.6 U					
1,2,3,7,8-PECDF						0.4 U					
2,3,4,6,7,8-HXCDF						0.3 U					
2,3,4,7,8-PECDF						0.5 U					
2,3,7,8-TCDD						0.5 U					
2,3,7,8-TCDF						0.3 U					
TEQ BIRD						0.83719					
TEQ BIRD HALFND						1.89779					
TEQ MAMMAL						2.19619					
TEQ MAMMAL HALFND						3.04319					
TEQ WHO-2007						3.128					
TEQ WHO-2007 - HALFND						3.921285					
TOTAL HPCDD						208					
TOTAL HPCDF						0.6 U					
TOTAL HXCDD						18.2 J					
TOTAL HXCDF						0.3 U					
TOTAL PECDD						0.6 U					
TOTAL PECDF						0.5 U					
TOTAL TCDD						0.5 U					
TOTAL TCDF						0.3 U					
EXPLOSIVES (MG/KG)											
1,3,5-TRINITROBENZENE	0.25 U	0.25 U	0.25 U	0.25 U	0.25 U	0.25 U	0.25 U	0.25 U	0.25 U	0.25 U	0.25 U
1,3-DINITROBENZENE	0.25 U	0.25 U	0.25 U	0.25 U	0.25 U	0.25 U	0.25 U	0.25 U	0.25 U	0.25 U	0.25 U
2,4,6-TRINITROTOLUENE	0.25 U	0.25 U	0.25 U	0.25 U	0.25 U	0.25 U	0.25 U	0.25 U	0.25 U	0.25 U	0.25 U
2,4-DINITROTOLUENE	0.25 U	0.25 U	0.25 U	0.25 U	0.25 U	0.25 U	0.25 U	0.25 U	0.25 U	0.25 U	0.25 U
2,6-DINITROTOLUENE	0.25 U	0.25 U	0.25 U	0.25 U	0.25 U	0.25 U	0.25 U	0.25 U	0.25 U	0.25 U	0.25 U
2-AMINO-4,6-DINITROTOLUENE	0.25 U	0.25 U	0.25 U	0.25 U	0.25 U	0.25 U	0.25 U	0.25 U	0.25 U	0.25 U	0.25 U
2-NITROTOLUENE	0.25 U	0.25 U	0.25 U	0.25 U	0.25 U	0.25 U	0.25 U	0.25 U	0.25 U	0.25 U	0.25 U
3-NITROTOLUENE	0.25 U	0.25 U	0.25 U	0.25 U	0.25 U	0.25 U	0.25 U	0.25 U	0.25 U	0.25 U	0.25 U
4-AMINO-2,6-DINITROTOLUENE	0.25 U	0.25 U	0.25 U	0.25 U	0.25 U	0.25 U	0.25 U	0.25 U	0.25 U	0.25 U	0.25 U
4-NITROTOLUENE	0.25 U	0.25 U	0.25 U	0.25 U	0.25 U	0.25 U	0.25 U	0.25 U	0.25 U	0.25 U	0.25 U
HMX	0.25 U	0.25 U	0.25 U	0.25 U	0.25 U	0.25 U	0.25 U	0.25 U	0.25 U	0.25 U	0.25 U
NITROBENZENE	0.25 U	0.25 U	0.25 U	0.25 U	0.25 U	0.25 U	0.25 U	0.25 U	0.25 U	0.25 U	0.25 U
PICRAMIC ACID	0.017 U	0.019 U	0.018 U	0.019 U	0.019 U	0.020 U	0.018 U	0.019 U	0.019 U	0.018 U	0.019 U
PICRIC ACID	0.017 U	0.019 U	0.018 U	0.019 U	0.019 U	0.02 U	0.018 U	0.019 U	0.019 U	0.018 UJ	0.019 U
RDX	0.25 U	0.25 U	0.25 U	0.25 U	0.25 U	0.25 U	0.25 U	0.25 U	0.25 U	0.25 U	0.25 U
TETRYL	0.25 U	0.25 U	0.25 U	0.25 U	0.25 U	0.25 U	0.25 U	0.25 U	0.25 U	0.25 U	0.25 U

TABLE A-1

SURFACE SOIL SAMPLE DATA
SWMU 16
NSA CRANE
CRANE, INDIANA

LOCATION	**16SB001**	**16SB002**	**16SB003**	**16SB004**	**16SB005**	**16SB006**	**16SB034**	**16SB035**	**16SB036**	**16SB037**	**16SB038**
SAMPLE ID	**16SS0010002**	**16SS0020002**	**16SS0030002**	**16SS0040002**	**16SS0050002**	**16SS0060002**	**16SS0340002**	**16SS0350002**	**16SS0360002**	**16SS0370002**	**16SS0380002**
SAMPLE DATE	**20030327**	**20030327**	**20030327**	**20030327**	**20030327**	**20030327**	**20030409**	**20030328**	**20030409**	**20030328**	**20030328**
ROUND	**01**	**01**	**01**	**01**	**01**	**01**	**01**	**01**	**01**	**01**	**01**
EVENT											
SAMPLE CODE	**NORMAL**	**NORMAL**	**NORMAL**	**NORMAL**	**NORMAL**	**NORMAL**	**NORMAL**	**NORMAL**	**NORMAL**	**NORMAL**	**NORMAL**
MATRIX	**SO**	**SO**	**SO**	**SO**	**SO**	**SO**	**SO**	**SO**	**SO**	**SO**	**SO**
SAMPLE TYPE	**NORMAL**	**NORMAL**	**NORMAL**	**NORMAL**	**NORMAL**	**NORMAL**	**NORMAL**	**NORMAL**	**NORMAL**	**NORMAL**	**NORMAL**
SUBMATRIX	**SS**	**SS**	**SS**	**SS**	**SS**	**SS**	**SS**	**SS**	**SS**	**SS**	**SS**
TOP DEPTH	**0**	**0**	**0**	**0**	**0**	**0**	**0**	**0**	**0**	**0**	**0**
BOTTOM DEPTH	**2**	**2**	**2**	**2**	**2**	**2**	**2**	**2**	**2**	**2**	**2**
HERBICIDES (UG/KG)											
HEXACHLOROPHENE	0.62 U	0.68 U	2.6 J	0.7 U	0.69 U	0.72 U	0.91 U	0.97 U	0.99 U	0.94 U	0.97 U
PENTACHLOROPHENOL	0.46 U	0.51 U	0.49 U	0.53 U	14	0.54 U	0.48 U	0.51 U	0.52 U	0.5 U	0.79 J
METALS (MG/KG)											
ALUMINUM	10500 J	13600 J	3610 U	18800 J	2740 J	16000 J	1780 J	6760 J	11900 J	5470 J	10900 J
ANTIMONY	0.43 U	0.40 U	0.36 U	0.62 U	0.95 U	0.75 U	0.51 J	0.75 U	0.55 J	0.44 U	0.36 U
ARSENIC	6.0 J	4.0 J	1.3 J	9.0 J	1.2 J	4.0 J	0.75 J	2.6 J	4.8 J	1.9 J	5.4 J
BARIUM	48.1 J	52.0 J	19.7 J	69.8 J	18.0 J	84.5 J	11.9 J	33.7 J	39.4 J	17.6 J	81.9 J
BERYLLIUM	0.36 J	0.43 J	0.12 U	0.59 J	0.25 U	0.47 J	0.06 U	0.20 U	0.23 J	0.27 U	0.27 U
CADMIUM	0.35 U	0.57 U	0.48 U	0.57 U	0.20 U	0.29 U	0.19 J	0.21 U	0.20 J	0.13 U	0.30 U
CALCIUM	56500 J	40000 J	246000 J	7760 J	20800 J	8910 J	212 J	727 J	1010 J	347 J	6750 J
CHROMIUM	15.5 J	18.8 J	11.9 J	20.5 J	8.3 J	20.5 J	4.3 J	9.0 J	12.8 J	7.6 J	13.0 J
COBALT	3.2 J	3.6 J	1.1 J	5.9 J	0.87 J	5.7 J	1.5 J	1.3 J	2.7 J	1.1 J	3.6 J
COPPER	10.4 J	9.9 J	3.5 J	12.7 J	13.9 J	12.1 J	2.4 J	9.3 J	11.4 J	5.3 J	13.9 J
IRON	15800 J	18600 J	4230 J	22200 J	8590 J	20900 J	2170 J	11500 J	17100 J	8360 J	18100 J
LEAD	8.8 J	12.3 J	4.7 J	11.4 J	15.9 J	15.0 J	3.5 J	11.9 J	9.6 J	4.2 J	14.0 J
LITHIUM	7.7 J	10.7 J	9.9 J	14.1 J	3.0 J	13.5 J	0.81 J	4.2 J	6.0 J	4.3 U	7.6 J
MAGNESIUM	2860 J	6350 J	62500 J	4650 J	8230 J	2980 J	105 J	801 J	1210 J	553 J	2160 J
MANGANESE	97.0 J	140 J	78.2 J	147 J	28.2 J	75.0 J	3.8 J	10.4 J	49.8 J	6.8 J	91.6 J
MERCURY	0.027 J	0.008 U	0.007 U	0.026 J	0.22 J	0.029 J	0.002 U	0.008 U	0.030 J	0.004 U	0.021 U
NICKEL	7.9 J	9.3 J	9.9 J	13.3 J	4.2 J	11.5 J	0.71 J	3.5 J	6.5 J	2.9 J	10.4 J
POTASSIUM	982 J	1180 J	1160 J	1690 J	807 J	1120 J	312 J	311 J	378 J	206 J	470 J
SELENIUM	0.23 U	0.22 U	0.22 U	0.41 U	0.14 U	0.17 U	0.03 U	0.10 U	0.16 J	0.06 U	0.14 U
SILVER	0.13 U	0.04 U	0.04 U	0.05 U	0.03 U	0.03 U	0.16 U	0.02 U	0.07 U	0.02 U	0.02 U
SODIUM	162 J	178 J	496 J	84.9 U	66.0 U	49.6 U	12.7 U	20.6 U	20.5 U	22.7 U	39.7 U
STRONTIUM	93.8 J	51.2 J	252 J	20.8 J	26.5 J	50.2 J	4.5 J	27.1 J	38.6 J	7.0 J	48.8 J
THALLIUM	0.18 U	0.15 U	0.06 U	0.23 U	0.05 U	0.17 U	0.03 U	0.07 U	0.10 U	0.06 U	0.10 U
TIN	0.43 U	0.47 U	0.38 U	0.57 U	0.33 U	0.63 U	0.25 J	0.45 U	0.38 J	0.39 U	0.40 U
TITANIUM	128 J	121 J	39.1 J	239 J	61.8 J	125 J	12.2 J	24.8 J	84.1 J	29.0 J	135 J
VANADIUM	27.1 J	29.3 J	13.9 J	37.1 J	10.8 J	32.3 J	3.6 J	11.2 J	20.6 J	10.2 J	20.1 J
ZINC	24.2 J	24.0 J	33.6 J	40.7 J	24.2 J	33.6 J	5.2 U	23.5 U	24.1 J	7.6 U	42.6 U
METALS (UG/KG)											
LEAD											
MISCELLANEOUS PARAMETERS (%)											
PERCENT MOISTURE											
MISCELLANEOUS PARAMETERS (MEQ/100)											
CATION EXCHANGE CAPACITY		20								21	
MISCELLANEOUS PARAMETERS (MG/KG)											
TOTAL ORGANIC CARBON		3800 J								1000 J	
MISCELLANEOUS PARAMETERS (S.U.)											
PH		8								5.2	
PESTICIDES/PCBS (UG/KG)											
AROCLOR-1016	18 U	19 U	18 U	20 U	20 U	20 U				19 U	19 U
AROCLOR-1221	35 U	39 U	37 U	40 U	39 U	41 U				38 U	39 U
AROCLOR-1232	18 U	19 U	18 U	20 U	20 U	20 U				19 U	19 U
AROCLOR-1242	18 U	19 U	18 U	20 U	20 U	20 U				19 U	19 U
AROCLOR-1248	18 U	19 U	18 U	20 U	20 U	20 U				19 U	19 U
AROCLOR-1254	18 U	19 U	18 U	20 U	20 U	20 U				19 U	19 U
AROCLOR-1260	18 U	19 U	18 U	20 U	20 U	20 U				19 U	19 U

TABLE A-1

SURFACE SOIL SAMPLE DATA
SWMU 16
NSA CRANE
CRANE, INDIANA

LOCATION	16SB001	16SB002	16SB003	16SB004	16SB005	16SB006	16SB034	16SB035	16SB036	16SB037	16SB038
SAMPLE ID	16SS0010002	16SS0020002	16SS0030002	16SS0040002	16SS0050002	16SS0060002	16SS0340002	16SS0350002	16SS0360002	16SS0370002	16SS0380002
SAMPLE DATE	20030327	20030327	20030327	20030327	20030327	20030327	20030409	20030328	20030409	20030328	20030328
ROUND	01	01	01	01	01	01	01	01	01	01	01
EVENT											
SAMPLE CODE	NORMAL	NORMAL	NORMAL	NORMAL	NORMAL	NORMAL	NORMAL	NORMAL	NORMAL	NORMAL	NORMAL
MATRIX	SO	SO	SO	SO	SO	SO	SO	SO	SO	SO	SO
SAMPLE TYPE	NORMAL	NORMAL	NORMAL	NORMAL	NORMAL	NORMAL	NORMAL	NORMAL	NORMAL	NORMAL	NORMAL
SUBMATRIX	SS	SS	SS	SS	SS	SS	SS	SS	SS	SS	SS
TOP DEPTH	0	0	0	0	0	0	0	0	0	0	0
BOTTOM DEPTH	2	2	2	2	2	2	2	2	2	2	2
PETROLEUM HYDROCARBONS (UG/KG)											
DRO (C08-C28)											
TPH (C06-C12)											
SEMIVOLATILES (UG/KG)											
1,2,4,5-TETRACHLOROBENZENE	69 U	76 U	150 U	78 U	77 U	81 U	72 U	76 U	78 U	74 U	76 U
1,2,4-TRICHLOROBENZENE	69 U	76 U	150 U	78 U	77 U	81 U	72 U	76 U	78 U	74 U	76 U
1,2-DICHLOROBENZENE	69 U	76 U	150 U	78 U	77 U	81 U	72 U	76 U	78 U	74 U	76 U
1,3-DICHLOROBENZENE	69 U	76 U	150 U	78 U	77 U	81 U	72 U	76 U	78 U	74 U	76 U
1,4-DICHLOROBENZENE	69 U	76 U	150 U	78 U	77 U	81 U	72 U	76 U	78 U	74 U	76 U
1,4-NAPHTHOQUINONE	69 U	76 U	150 U	78 U	77 U	81 U	72 U	76 U	78 U	74 U	76 U
1,4-PHENYLENEDIAMINE	69 UJ	76 UJ	150 UJ	78 UJ	77 UJ	81 UJ	72 UJ	76 UR	78 UJ	74 UJ	76 UR
1-NAPHTHYLAMINE	69 U	76 U	150 U	78 U	77 U	81 U	72 U	76 U	78 U	74 U	76 U
2,2'-OXYBIS(1-CHLOROPROPANE)	69 U	76 U	150 U	78 U	77 U	81 U	72 U	76 U	78 U	74 U	76 U
2,3,4,6-TETRACHLOROPHENOL	69 U	76 U	150 U	78 U	77 U	81 U	72 U	76 U	78 U	74 U	76 U
2,4,5-TRICHLOROPHENOL	69 U	76 U	150 U	78 U	77 U	81 U	72 U	76 U	78 U	74 U	76 U
2,4,6-TRICHLOROPHENOL	69 U	76 U	150 U	78 U	77 U	81 U	72 U	76 U	78 U	74 U	76 U
2,4-DICHLOROPHENOL	69 U	76 U	150 U	78 U	77 U	81 U	72 U	76 U	78 U	74 U	76 U
2,4-DIMETHYLPHENOL	69 U	76 U	150 U	78 U	77 U	81 U	72 U	76 U	78 U	74 U	76 U
2,4-DINITROPHENOL	69 U	76 U	150 U	78 U	77 U	81 U	72 U	76 UJ	78 U	74 U	76 UJ
2,6-DICHLOROPHENOL	69 U	76 U	150 U	78 U	77 U	81 U	72 U	76 U	78 U	74 U	76 U
2-ACETYLAMINOFLUORENE	69 U	76 U	150 U	78 U	77 U	81 U	72 U	76 U	78 U	74 U	76 U
2-CHLORONAPHTHALENE	69 U	76 U	150 U	78 U	77 UJ	81 U	72 U	76 U	78 U	74 U	76 U
2-CHLOROPHENOL	69 U	76 U	150 U	78 U	77 U	81 U	72 U	76 U	78 U	74 U	76 U
2-METHYLNAPHTHALENE	3.4 U	3.8 U	94	3.9 U	3.8 U	4 U	3.5 U	3.8 U	3.8 U	3.7 U	3.8 U
2-METHYLPHENOL	69 U	76 U	150 U	78 U	77 U	81 U	72 U	76 U	78 U	74 U	76 U
2-NAPHTHYLAMINE	69 U	76 U	150 U	78 U	77 U	81 U	72 U	76 U	78 U	74 U	76 U
2-NITROANILINE	69 U	76 U	150 U	78 U	77 U	81 U	72 U	76 U	78 U	74 U	76 U
2-NITROPHENOL	69 U	76 U	150 U	78 U	77 U	81 U	72 U	76 U	78 U	74 U	76 U
2-PICOLINE	69 U	76 U	150 U	78 U	77 U	81 U	72 U	76 U	78 U	74 U	76 U
3&4-METHYLPHENOL	69 U	76 U	150 U	78 U	77 U	81 U	72 U	76 U	78 U	74 U	76 U
3,3'-DICHLOROBENZIDINE	69 U	76 U	150 U	78 U	77 U	81 U	72 U	76 U	78 U	74 U	76 U
3,3'-DIMETHYLBENZIDINE	69 U	76 U	150 U	78 U	77 U	81 U	72 U	76 U	78 U	74 U	76 U
3-METHYLCHOLANTHRENE	69 U	76 U	150 U	78 U	77 U	81 U	72 U	76 U	78 U	74 U	76 U
3-NITROANILINE	69 U	76 U	150 U	78 U	77 U	81 U	72 U	76 U	78 U	74 U	76 U
4,6-DINITRO-2-METHYLPHENOL	69 U	76 U	150 U	78 U	77 U	81 U	72 U	76 U	78 U	74 U	76 U
4-AMINOBIPHENYL	69 U	76 U	150 U	78 U	77 U	81 U	72 U	76 U	78 U	74 U	76 U
4-BROMOPHENYL PHENYL ETHER	69 U	76 U	150 U	78 U	77 U	81 U	72 U	76 U	78 U	74 U	76 U
4-CHLORO-3-METHYLPHENOL	69 U	76 U	150 U	78 U	77 U	81 U	72 U	76 U	78 U	74 U	76 U
4-CHLOROANILINE	69 U	76 U	150 U	78 U	77 U	81 U	72 U	76 U	78 U	74 U	76 U
4-CHLOROPHENYL PHENYL ETHER	69 U	76 U	150 U	78 U	77 U	81 U	72 U	76 U	78 U	74 U	76 U
4-NITROANILINE	69 U	76 U	150 U	78 U	77 U	81 U	72 U	76 U	78 U	74 U	76 U
4-NITROPHENOL	69 U	76 U	150 U	78 U	77 U	81 U	72 U	76 U	78 U	74 U	76 U
4-NITROQUINOLINE-1-OXIDE	69 UR	76 UR	150 UR	78 UR	77 UR	81 UR	72 UR	76 UR	78 UR	74 UR	76 UR
5-NITRO-O-TOLUIDINE	69 U	76 U	150 U	78 U	77 U	81 U	72 U	76 UJ	78 U	74 U	76 UJ
7,12-DIMETHYLBENZ(A)ANTHRACENE	69 U	76 U	150 U	78 U	77 U	81 U	72 U	76 U	78 U	74 U	76 U
A,A-DIMETHYLPHENETHYLAMINE	69 UJ	76 UJ	150 UJ	78 UJ	77 UJ	81 UJ	72 UJ	76 UJ	78 UJ	74 UJ	76 UJ
ACENAPHTHENE	5 J	3.8 U	1800	3.9 U	3.8 U	4 U	3.5 U	3.8 U	3.8 U	3.7 U	3.8 U
ACENAPHTHYLENE	13	3.8 U	680	3.9 U	3.8 U	4 U	3.5 U	3.8 U	3.8 U	3.7 U	3.8 U
ACETOPHENONE	69 U	76 U	150 U	78 U	77 U	81 U	72 U	76 U	78 U	74 U	76 U

TABLE A-1

SURFACE SOIL SAMPLE DATA
SWMU 16
NSA CRANE
CRANE, INDIANA

LOCATION	**16SB001**	**16SB002**	**16SB003**	**16SB004**	**16SB005**	**16SB006**	**16SB034**	**16SB035**	**16SB036**	**16SB037**	**16SB038**
SAMPLE ID	**16SS0010002**	**16SS0020002**	**16SS0030002**	**16SS0040002**	**16SS0050002**	**16SS0060002**	**16SS0340002**	**16SS0350002**	**16SS0360002**	**16SS0370002**	**16SS0380002**
SAMPLE DATE	**20030327**	**20030327**	**20030327**	**20030327**	**20030327**	**20030327**	**20030409**	**20030328**	**20030409**	**20030328**	**20030328**
ROUND	**01**	**01**	**01**	**01**	**01**	**01**	**01**	**01**	**01**	**01**	**01**
EVENT											
SAMPLE CODE	**NORMAL**	**NORMAL**	**NORMAL**	**NORMAL**	**NORMAL**	**NORMAL**	**NORMAL**	**NORMAL**	**NORMAL**	**NORMAL**	**NORMAL**
MATRIX	**SO**	**SO**	**SO**	**SO**	**SO**	**SO**	**SO**	**SO**	**SO**	**SO**	**SO**
SAMPLE TYPE	**NORMAL**	**NORMAL**	**NORMAL**	**NORMAL**	**NORMAL**	**NORMAL**	**NORMAL**	**NORMAL**	**NORMAL**	**NORMAL**	**NORMAL**
SUBMATRIX	**SS**	**SS**	**SS**	**SS**	**SS**	**SS**	**SS**	**SS**	**SS**	**SS**	**SS**
TOP DEPTH	**0**	**0**	**0**	**0**	**0**	**0**	**0**	**0**	**0**	**0**	**0**
BOTTOM DEPTH	**2**	**2**	**2**	**2**	**2**	**2**	**2**	**2**	**2**	**2**	**2**
ANILINE	69 U	76 U	150 U	78 U	77 U	81 U	72 U	76 U	78 U	74 U	76 U
ANTHRACENE	27	3.8 U	3500	3.9 U	3.8 U	4 U	3.5 U	3.8 U	3.8 U	3.7 U	3.8 U
ARAMITE	69 UR	76 UR	150 UR	78 UR	77 UR	81 UR	72 UR	76 U	78 UR	74 UR	76 U
BENZO(A)ANTHRACENE	100	3.8 U	9600	15	3.8 U	4 U	3.5 U	8	3.8 U	5 J	3.8 U
BENZO(A)PYRENE	94	3.8 U	8400	12	3.8 U	4 U	3.5 U	10	3.8 U	5 J	3.8 U
BENZO(B)FLUORANTHENE	110	3.8 U	9200	17	3.8 U	4 U	3.5 UJ	12	3.8 UJ	5 J	3.8 U
BENZO(G,H,I)PERYLENE	48	3.8 U	5100	8	6 J	4 U	3.5 U	5 J	3.8 U	3.7 U	3.8 U
BENZO(K)FLUORANTHENE	58	3.8 U	5000	11	3.8 U	4 U	3.5 U	8	3.8 U	4 J	3.8 U
BENZYL ALCOHOL	69 U	76 U	150 U	78 U	77 U	81 U	72 U	76 UJ	78 U	74 U	76 UJ
BIS(2-CHLOROETHOXY)METHANE	69 U	76 U	150 U	78 U	77 U	81 U	72 U	76 U	78 U	74 U	76 U
BIS(2-CHLOROETHYL)ETHER	69 U	76 U	150 U	78 U	77 U	81 U	72 U	76 U	78 U	74 U	76 U
BIS(2-ETHYLHEXYL)PHTHALATE	69 U	76 U	150 U	92 J	77 U	160 J	72 U	220 BU	1200 BJ	74 U	160 BU
BUTYL BENZYL PHTHALATE	69 U	76 U	150 U	78 U	77 U	81 U	72 U	76 U	78 U	74 U	76 U
CHLOROBENZILATE	69 U	76 U	150 U	78 U	77 U	81 U	72 U	76 U	78 U	74 U	76 U
CHRYSENE	130	4 J	11000	34	3.8 U	4 U	3.5 U	9	3.8 U	4 J	3.8 U
DIALLATE	69 U	76 U	150 U	78 U	77 U	81 U	72 U	76 U	78 U	74 U	76 U
DIBENZO(A,H)ANTHRACENE	15	3.8 U	1600	3.9 U	3.8 U	4 U	3.5 U	3.8 U	3.8 U	3.7 U	3.8 U
DIBENZOFURAN	69 U	76 U	560 J	78 U	77 U	81 U	72 U	76 U	78 U	74 U	76 U
DIETHYL PHTHALATE	69 U	76 U	150 U	78 U	77 U	81 U	72 U	76 U	78 U	74 U	76 U
DIMETHYL PHTHALATE	69 U	76 U	150 U	78 U	77 U	81 U	72 U	76 U	78 U	74 U	76 U
DI-N-BUTYL PHTHALATE	69 U	76 U	150 U	78 U	77 U	81 U	72 U	76 U	78 U	74 U	76 U
DI-N-OCTYL PHTHALATE	69 U	76 U	150 U	78 U	77 U	81 U	72 U	76 U	78 U	74 U	76 U
DIPHENYLAMINE	69 U	76 U	150 U	78 U	77 U	81 U	72 U	76 U	78 U	74 U	76 U
ETHYL METHANE SULFONATE	69 U	76 U	150 U	78 U	77 U	81 U	72 U	76 U	78 U	74 U	76 U
FLUORANTHENE	220	3.8 U	19000	41	3.8 U	4 U	3.5 U	6 J	3.8 U	4 J	3.8 U
FLUORENE	23	3.8 U	2300	4 J	3.8 U	4 U	3.5 U	3.8 U	3.8 U	3.7 U	3.8 U
HEXACHLOROBENZENE	69 U	76 U	150 U	78 U	77 U	81 U	72 U	76 U	78 U	74 U	76 U
HEXACHLOROBUTADIENE	69 U	76 U	150 U	78 U	77 U	81 U	72 U	76 U	78 U	74 U	76 U
HEXACHLOROCYCLOPENTADIENE	69 U	76 U	150 U	78 U	77 U	81 U	72 U	76 UJ	78 U	74 U	76 UJ
HEXACHLOROETHANE	69 U	76 U	150 U	78 U	77 U	81 U	72 U	76 U	78 U	74 U	76 U
HEXACHLOROPROPENE	69 U	76 U	150 U	78 U	77 U	81 U	72 U	76 U	78 U	74 U	76 U
INDENO(1,2,3-CD)PYRENE	41	3.8 U	4400	6 J	3.8 U	4 U	3.5 U	5 J	3.8 U	3.7 U	3.8 U
ISODRIN	69 U	76 U	150 U	78 U	77 U	81 U	72 U	76 U	78 U	74 U	76 U
ISOPHORONE	69 U	76 U	150 U	78 U	77 U	81 U	72 U	76 U	78 U	74 U	76 U
ISOSAFROLE	69 U	76 U	150 U	78 U	77 U	81 U	72 U	76 U	78 U	74 U	76 U
KEPONE	69 UJ	76 UJ	150 UJ	78 UJ	77 UJ	81 UJ	72 UR	76 UR	78 UR	74 UJ	76 UR
METHAPYRILENE	69 U	76 U	150 U	78 U	77 UJ	81 U	72 U	76 UJ	78 U	74 UJ	76 UJ
METHYL METHANE SULFONATE	69 U	76 U	150 U	78 U	77 U	81 U	72 U	76 U	78 U	74 U	76 U
NAPHTHALENE	3.4 U	3.8 U	180	3.9 U	3.8 U	4 U	3.5 U	3.8 U	3.8 U	3.7 U	3.8 U
N-NITROSODIETHYLAMINE	69 U	76 U	150 U	78 U	77 U	81 U	72 U	76 U	78 U	74 U	76 U
N-NITROSODIMETHYLAMINE	69 U	76 U	150 U	78 U	77 U	81 U	72 U	76 U	78 U	74 U	76 U
N-NITROSO-DI-N-BUTYLAMINE	69 U	76 U	150 U	78 U	77 U	81 U	72 U	76 U	78 U	74 U	76 U
N-NITROSO-DI-N-PROPYLAMINE	69 U	76 U	150 U	78 U	77 U	81 U	72 U	76 U	78 U	74 U	76 U
N-NITROSOMETHYLETHYLAMINE	69 U	76 U	150 U	78 U	77 U	81 U	72 U	76 U	78 U	74 U	76 U
N-NITROSOMORPHOLINE	69 U	76 U	150 U	78 U	77 U	81 U	72 U	76 U	78 U	74 U	76 U
N-NITROSOPIPERIDINE	69 U	76 U	150 U	78 U	77 U	81 U	72 U	76 U	78 U	74 U	76 U
N-NITROSOPYRROLIDINE	69 U	76 U	150 U	78 U	77 U	81 U	72 U	76 U	78 U	74 U	76 U
O,O,O-TRIETHYL PHOSPHOROTHIOATE	69 U	76 U	150 U	78 U	77 U	81 U	72 U	76 U	78 U	74 U	76 U
O-TOLUIDINE	69 U	76 U	150 U	78 U	77 U	81 U	72 U	76 U	78 U	74 U	76 U

TABLE A-1

SURFACE SOIL SAMPLE DATA
SWMU 16
NSA CRANE
CRANE, INDIANA

LOCATION	**16SB001**	**16SB002**	**16SB003**	**16SB004**	**16SB005**	**16SB006**	**16SB034**	**16SB035**	**16SB036**	**16SB037**	**16SB038**
SAMPLE ID	**16SS0010002**	**16SS0020002**	**16SS0030002**	**16SS0040002**	**16SS0050002**	**16SS0060002**	**16SS0340002**	**16SS0350002**	**16SS0360002**	**16SS0370002**	**16SS0380002**
SAMPLE DATE	**20030327**	**20030327**	**20030327**	**20030327**	**20030327**	**20030327**	**20030409**	**20030328**	**20030409**	**20030328**	**20030328**
ROUND	**01**	**01**	**01**	**01**	**01**	**01**	**01**	**01**	**01**	**01**	**01**
EVENT											
SAMPLE CODE	**NORMAL**	**NORMAL**	**NORMAL**	**NORMAL**	**NORMAL**	**NORMAL**	**NORMAL**	**NORMAL**	**NORMAL**	**NORMAL**	**NORMAL**
MATRIX	**SO**	**SO**	**SO**	**SO**	**SO**	**SO**	**SO**	**SO**	**SO**	**SO**	**SO**
SAMPLE TYPE	**NORMAL**	**NORMAL**	**NORMAL**	**NORMAL**	**NORMAL**	**NORMAL**	**NORMAL**	**NORMAL**	**NORMAL**	**NORMAL**	**NORMAL**
SUBMATRIX	**SS**	**SS**	**SS**	**SS**	**SS**	**SS**	**SS**	**SS**	**SS**	**SS**	**SS**
TOP DEPTH	**0**	**0**	**0**	**0**	**0**	**0**	**0**	**0**	**0**	**0**	**0**
BOTTOM DEPTH	**2**	**2**	**2**	**2**	**2**	**2**	**2**	**2**	**2**	**2**	**2**
PENTACHLOROBENZENE	69 U	76 U	150 U	78 U	77 U	81 U	72 U	76 U	78 U	74 U	76 U
PENTACHLOROETHANE	69 U	76 U	150 U	78 U	77 U	81 U	72 U	76 U	78 U	74 U	76 U
PENTACHLORONITROBENZENE	69 U	76 U	150 U	78 U	77 U	81 U	72 U	76 U	78 U	74 U	76 U
PHENACETIN	69 U	76 U	150 U	78 U	77 U	81 U	72 U	76 U	78 U	74 U	76 U
PHENANTHRENE	140	3.8 U	8700	24	3.8 U	4 U	3.5 U	3.8 U	3.8 U	3.7 U	3.8 U
PHENOL	69 U	76 U	150 U	78 U	77 U	81 U	72 U	76 U	78 U	74 U	76 U
PRONAMIDE	69 U	76 U	150 U	78 U	77 U	81 U	72 U	76 U	78 U	74 U	76 U
PYRENE	200	6 J	35000	44	3.8 U	4 U	3.5 U	10	3.8 U	5 J	3.8 U
PYRIDINE	69 U	76 U	150 U	78 U	77 U	81 U	72 U	76 U	78 U	74 U	76 U
SAFROLE	69 U	76 U	150 U	78 U	77 U	81 U	72 U	76 U	78 U	74 U	76 U
SOLVENT YELLOW 2	69 U	76 U	150 U	78 U	77 U	81 U	72 U	76 U	78 U	74 U	76 U
VOLATILES (UG/KG)											
1,1,1,2-TETRACHLOROETHANE	1 U	1.1 U	1.1 U	1.2 U	1.2 U	1.2 U	1.1 U	1.1 U	1.2 U	1.1 U	1.1 U
1,1,1-TRICHLOROETHANE	1 U	1.1 U	1.1 U	1.2 U	1.2 U	1.2 U	1.1 U	1.1 U	1.2 U	1.1 U	1.1 U
1,1,2,2-TETRACHLOROETHANE	1 U	1.1 U	1.1 U	1.2 U	1.2 U	1.2 U	1.1 U	1.1 U	1.2 U	1.1 U	1.1 U
1,1,2-TRICHLOROETHANE	1 U	1.1 U	1.1 U	1.2 U	1.2 U	1.2 U	1.1 U	1.1 U	1.2 U	1.1 U	1.1 U
1,1,2-TRICHLOROTRIFLUOROETHANE											
1,1-DICHLOROETHANE	1 U	1.1 U	1.1 U	1.2 U	1.2 U	1.2 U	1.1 U	1.1 U	1.2 U	1.1 U	1.1 U
1,1-DICHLOROETHENE	1 U	1.1 U	1.1 U	1.2 U	1.2 U	1.2 U	1.1 U	1.1 U	1.2 U	1.1 U	1.1 U
1,2,3-TRICHLOROBENZENE											
1,2,3-TRICHLOROPROPANE	1 U	1.1 U	1.1 U	1.2 U	1.2 U	1.2 U	1.1 U	1.1 U	1.2 U	1.1 U	1.1 U
1,2,4-TRICHLOROBENZENE											
1,2-DIBROMO-3-CHLOROPROPANE	1 U	1.1 U	1.1 U	1.2 U	1.2 U	1.2 U	1.1 U	1.1 U	1.2 U	1.1 U	1.1 U
1,2-DIBROMOETHANE	1 U	1.1 U	1.1 U	1.2 U	1.2 U	1.2 U	1.1 U	1.1 U	1.2 U	1.1 U	1.1 U
1,2-DICHLOROBENZENE											
1,2-DICHLOROETHANE	1 U	1.1 U	1.1 U	1.2 U	1.2 U	1.2 U	1.1 U	1.1 U	1.2 U	1.1 U	1.1 U
1,2-DICHLOROPROPANE	1 U	1.1 U	1.1 U	1.2 U	1.2 U	1.2 U	1.1 U	1.1 U	1.2 U	1.1 U	1.1 U
1,3-DICHLOROBENZENE											
1,4-DICHLOROBENZENE											
1,4-DIOXANE	100 U	110 U	110 U	120 U	120 U	120 U	110 U	110 U	120 U	110 U	110 U
2-BUTANONE	1 U	1.1 U	1.1 U	1.2 U	1.2 U	1.2 U	1.1 U	1.1 U	1.2 U	1.1 U	1.1 U
2-HEXANONE	1 U	1.1 U	1.1 U	1.2 U	1.2 U	1.2 U	1.1 U	1.1 U	1.2 U	1.1 U	1.1 U
3-CHLOROPROPENE	1 U	1.1 U	1.1 U	1.2 U	1.2 U	1.2 U	1.1 U	1.1 U	1.2 U	1.1 U	1.1 U
4-METHYL-2-PENTANONE	1 U	1.1 U	1.1 U	1.2 U	1.2 U	1.2 U	1.1 U	1.1 U	1.2 U	1.1 U	1.1 U
ACETONE	7 J	1.1 UJ	1.1 UJ	3 J	1.2 UJ	1.2 UJ	1.1 UJ	1.1 UJ	1.2 UJ	1.1 UJ	1.1 UJ
ACETONITRILE	41 U	46 U	43 U	47 U	46 U	48 U	43 U	46 U	46 U	44 U	46 U
ACROLEIN	1 UR	1.1 UR	1.1 UR	1.2 UR	1.2 UR	1.2 UR	1.1 UR	1.1 U	1.2 UR	1.1 U	1.1 U
ACRYLONITRILE	1 U	1.1 U	1.1 U	1.2 U	1.2 U	1.2 U	1.1 U	1.1 U	1.2 U	1.1 U	1.1 U
BENZENE	1 U	1.1 U	1.1 U	1.2 U	1.2 U	1.2 U	1.1 U	1.1 U	1.2 U	1.1 U	1.1 U
BROMODICHLOROMETHANE	1 U	1.1 U	1.1 U	1.2 U	1.2 U	1.2 U	1.1 U	1.1 U	1.2 U	1.1 U	1.1 U
BROMOFORM	1 U	1.1 U	1.1 U	1.2 U	1.2 U	1.2 U	1.1 U	1.1 U	1.2 U	1.1 U	1.1 U
BROMOMETHANE	1 UJ	1.1 UJ	1.1 UJ	1.2 UJ	1.2 UJ	1.2 UJ	1.1 UJ	1.1 UJ	1.2 UJ	1.1 UJ	1.1 UJ
CARBON DISULFIDE	1 UJ	1.1 U	1.1 U	1.2 U	1.2 UJ	1.2 UJ	1.1 UJ	1.1 UJ	1.2 UJ	1.1 UJ	1.1 UJ
CARBON TETRACHLORIDE	1 U	1.1 U	1.1 U	1.2 U	1.2 U	1.2 U	1.1 U	1.1 U	1.2 U	1.1 U	1.1 U
CHLOROBENZENE	1 U	1.1 U	1.1 U	1.2 U	1.2 U	1.2 U	1.1 U	1.1 U	1.2 U	1.1 U	1.1 U
CHLORODIBROMOMETHANE	1 U	1.1 U	1.1 U	1.2 U	1.2 U	1.2 U	1.1 U	1.1 U	1.2 U	1.1 U	1.1 U
CHLOROETHANE	1 U	1.1 U	1.1 U	1.2 U	1.2 U	1.2 U	1.1 U	1.1 U	1.2 U	1.1 U	1.1 U
CHLOROFORM	1 U	1.1 U	1.1 U	1.2 U	1.2 U	1.2 U	1.1 U	1.1 U	1.2 U	1.1 U	1.1 U
CHLOROMETHANE	1 U	1.1 U	1.1 U	1.2 U	1.2 U	1.2 U	1.1 U	1.1 U	1.2 U	1.1 U	1.1 U

TABLE A-1

SURFACE SOIL SAMPLE DATA
SWMU 16
NSA CRANE
CRANE, INDIANA

LOCATION	**16SB001**	**16SB002**	**16SB003**	**16SB004**	**16SB005**	**16SB006**	**16SB034**	**16SB035**	**16SB036**	**16SB037**	**16SB038**
SAMPLE ID	**16SS0010002**	**16SS0020002**	**16SS0030002**	**16SS0040002**	**16SS0050002**	**16SS0060002**	**16SS0340002**	**16SS0350002**	**16SS0360002**	**16SS0370002**	**16SS0380002**
SAMPLE DATE	**20030327**	**20030327**	**20030327**	**20030327**	**20030327**	**20030327**	**20030409**	**20030328**	**20030409**	**20030328**	**20030328**
ROUND	**01**	**01**	**01**	**01**	**01**	**01**	**01**	**01**	**01**	**01**	**01**
EVENT											
SAMPLE CODE	**NORMAL**	**NORMAL**	**NORMAL**	**NORMAL**	**NORMAL**	**NORMAL**	**NORMAL**	**NORMAL**	**NORMAL**	**NORMAL**	**NORMAL**
MATRIX	**SO**	**SO**	**SO**	**SO**	**SO**	**SO**	**SO**	**SO**	**SO**	**SO**	**SO**
SAMPLE TYPE	**NORMAL**	**NORMAL**	**NORMAL**	**NORMAL**	**NORMAL**	**NORMAL**	**NORMAL**	**NORMAL**	**NORMAL**	**NORMAL**	**NORMAL**
SUBMATRIX	**SS**	**SS**	**SS**	**SS**	**SS**	**SS**	**SS**	**SS**	**SS**	**SS**	**SS**
TOP DEPTH	**0**	**0**	**0**	**0**	**0**	**0**	**0**	**0**	**0**	**0**	**0**
BOTTOM DEPTH	**2**	**2**	**2**	**2**	**2**	**2**	**2**	**2**	**2**	**2**	**2**
CHLOROPRENE	1 U	1.1 U	1.1 U	1.2 U	1.2 U	1.2 U	1.1 U	1.1 U	1.2 U	1.1 U	1.1 U
CIS-1,2-DICHLOROETHENE	1 U	1.1 U	1.1 U	1.2 U	1.2 U	1.2 U	1.1 U	1.1 U	1.2 U	1.1 U	1.1 U
CIS-1,3-DICHLOROPROPENE	1 U	1.1 U	1.1 U	1.2 U	1.2 U	1.2 U	1.1 U	1.1 U	1.2 U	1.1 U	1.1 U
CYCLOHEXANE											
DIBROMOMETHANE	1 U	1.1 U	1.1 U	1.2 U	1.2 U	1.2 U	1.1 U	1.1 U	1.2 U	1.1 U	1.1 U
DICHLORODIFLUOROMETHANE	1 U	1.1 U	1.1 U	1.2 U	1.2 U	1.2 U	1.1 UJ	1.1 U	1.2 UJ	1.1 U	1.1 U
ETHYL METHACRYLATE	1 U	1.1 U	1.1 U	1.2 U	1.2 U	1.2 U	1.1 U	1.1 U	1.2 U	1.1 U	1.1 U
ETHYLBENZENE	1 U	1.1 U	1.1 U	1.2 U	1.2 U	1.2 U	1.1 U	1.1 U	1.2 U	1.1 U	1.1 U
ISOBUTANOL	41 U	46 U	43 U	47 U	46 U	48 U	43 U	46 U	46 U	44 U	46 U
ISOPROPYLBENZENE											
METHACRYLONITRILE	1 U	1.1 U	1.1 U	1.2 U	1.2 U	1.2 U	1.1 U	1.1 U	1.2 U	1.1 U	1.1 U
METHYL ACETATE											
METHYL IODIDE	1 UJ	1.1 UJ	1.1 UJ	1.2 UJ	1.2 UJ	1.2 UJ	1.1 U	1.1 UJ	1.2 U	1.1 UJ	1.1 UJ
METHYL METHACRYLATE	1 U	1.1 U	1.1 U	1.2 U	1.2 U	1.2 U	1.1 U	1.1 U	1.2 U	1.1 U	1.1 U
METHYL TERT-BUTYL ETHER											
METHYLENE CHLORIDE	1 UJ	2 U	1 U	3 U	3 U	1.2 UJ	1.1 UJ	13 BU	1.2 UJ	1 BU	2 BU
PROPIONITRILE	41 U	46 U	43 U	47 U	46 U	48 U	43 U	46 U	46 U	44 U	46 U
STYRENE	1 U	1.1 U	1.1 U	1 J	1.2 U	1.2 U	1.1 U	1.1 U	1.2 U	1.1 U	1.1 U
TETRACHLOROETHENE	1 U	1.1 U	1.1 U	1.2 U	1.2 U	1.2 U	1.1 U	1.1 U	1.2 U	1.1 U	1.1 U
TOLUENE	1 U	1.1 U	1.1 U	1.2 U	1.2 U	1.2 U	1.1 U	1.1 U	1.2 U	1.1 U	1.1 U
TOTAL XYLENES	1 U	1.1 U	1.1 U	1.2 U	1.2 U	1.2 U	1.1 U	1.1 U	1.2 U	1.1 U	1.1 U
TRANS-1,2-DICHLOROETHENE	1 U	1 J	2 J	1 J	1.2 U	1.2 U	1.1 U	1.1 U	1.2 U	1.1 U	1.1 U
TRANS-1,3-DICHLOROPROPENE	1 U	1.1 U	1.1 U	1.2 U	1.2 U	1.2 U	1.1 U	1.1 U	1.2 U	1.1 U	1.1 U
TRANS-1,4-DICHLORO-2-BUTENE	1 U	1.1 U	1.1 U	1.2 U	1.2 U	1.2 U	1.1 U	1.1 U	1.2 U	1.1 U	1.1 U
TRICHLOROETHENE	1 U	1.1 U	1.1 U	1.2 U	1.2 U	1.2 U	1.1 U	1.1 U	1.2 U	1.1 U	6
TRICHLOROFLUOROMETHANE	1 U	2 J	1.1 U	2 J	2 J	1.2 U	2 J	3 J	2 J	2 J	2 J
VINYL ACETATE	1 U	1.1 UJ	1.1 UJ	1.2 UJ	1.2 U	1.2 U	1.1 U	1 J	1.2 U	1.1 U	1.1 U
VINYL CHLORIDE	1 U	1.1 U	1.1 U	1.2 U	1.2 U	1.2 U	1.1 U	1.1 U	1.2 U	1.1 U	1.1 U

TABLE A-1

SURFACE SOIL SAMPLE DATA
SWMU 16
NSA CRANE
CRANE, INDIANA

LOCATION	16SB039	16SB051	16SB052	16SB053	16SB054	16SB055	16SB056	16SB057	16SB058	16SB059	16SB060
SAMPLE ID	16SS0390002	16SS0510102	16SS0520102	16SS0530102	16SS0540102	16SS0550102	16SS0560102	16SS0570102	16SS0580102	16SS0590102	16SS0600102
SAMPLE DATE	20030328	20040813	20040812	20040812	20040813	20040812	20040812	20040813	20040813	20040813	20040811
ROUND	01	03	03	03	03	03	03	03	03	03	03
EVENT											
SAMPLE CODE	NORMAL	NORMAL	NORMAL	NORMAL	NORMAL	NORMAL	NORMAL	NORMAL	NORMAL	NORMAL	NORMAL
MATRIX	SO	SO	SO	SO	SO	SO	SO	SO	SO	SO	SO
SAMPLE TYPE	NORMAL	NORMAL	NORMAL	NORMAL	NORMAL	NORMAL	NORMAL	NORMAL	NORMAL	NORMAL	NORMAL
SUBMATRIX	SS	SS	SS	SS	SS	SS	SS	SS	SS	SS	SS
TOP DEPTH	0	1	1	1	1	1	1	1	1	1	1
BOTTOM DEPTH	2	2	2	2	2	2	2	2	2	2	2
DIOXINS/FURANS (NG/KG)											
1,2,3,4,6,7,8,9-OCDD											
1,2,3,4,6,7,8,9-OCDF											
1,2,3,4,6,7,8-HPCDD											
1,2,3,4,6,7,8-HPCDF											
1,2,3,4,7,8,9-HPCDF											
1,2,3,4,7,8-HXCDD											
1,2,3,4,7,8-HXCDF											
1,2,3,6,7,8-HXCDD											
1,2,3,6,7,8-HXCDF											
1,2,3,7,8,9-HXCDD											
1,2,3,7,8,9-HXCDF											
1,2,3,7,8-PECDD											
1,2,3,7,8-PECDF											
2,3,4,6,7,8-HXCDF											
2,3,4,7,8-PECDF											
2,3,7,8-TCDD											
2,3,7,8-TCDF											
TEQ BIRD											
TEQ BIRD HALFND											
TEQ MAMMAL											
TEQ MAMMAL HALFND											
TEQ WHO-2007											
TEQ WHO-2007 - HALFND											
TOTAL HPCDD											
TOTAL HPCDF											
TOTAL HXCDD											
TOTAL HXCDF											
TOTAL PECDD											
TOTAL PECDF											
TOTAL TCDD											
TOTAL TCDF											
EXPLOSIVES (MG/KG)											
1,3,5-TRINITROBENZENE	0.25 UJ										
1,3-DINITROBENZENE	0.25 UJ										
2,4,6-TRINITROTOLUENE	0.25 UJ										
2,4-DINITROTOLUENE	0.25 UJ										
2,6-DINITROTOLUENE	0.25 UJ										
2-AMINO-4,6-DINITROTOLUENE	0.25 UJ										
2-NITROTOLUENE	0.25 UJ										
3-NITROTOLUENE	0.25 UJ										
4-AMINO-2,6-DINITROTOLUENE	0.25 UJ										
4-NITROTOLUENE	0.25 UJ										
HMX	0.25 UJ										
NITROBENZENE	0.25 UJ										
PICRAMIC ACID	0.019 U										
PICRIC ACID	0.019 U										
RDX	0.25 UJ										
TETRYL	0.25 UJ										

TABLE A-1

SURFACE SOIL SAMPLE DATA
SWMU 16
NSA CRANE
CRANE, INDIANA

LOCATION	16SB039	16SB051	16SB052	16SB053	16SB054	16SB055	16SB056	16SB057	16SB058	16SB059	16SB060
SAMPLE ID	16SS0390002	16SS0510102	16SS0520102	16SS0530102	16SS0540102	16SS0550102	16SS0560102	16SS0570102	16SS0580102	16SS0590102	16SS0600102
SAMPLE DATE	20030328	20040813	20040812	20040812	20040813	20040812	20040812	20040813	20040813	20040813	20040811
ROUND	01	03	03	03	03	03	03	03	03	03	03
EVENT											
SAMPLE CODE	NORMAL	NORMAL	NORMAL	NORMAL	NORMAL	NORMAL	NORMAL	NORMAL	NORMAL	NORMAL	NORMAL
MATRIX	SO	SO	SO	SO	SO	SO	SO	SO	SO	SO	SO
SAMPLE TYPE	NORMAL	NORMAL	NORMAL	NORMAL	NORMAL	NORMAL	NORMAL	NORMAL	NORMAL	NORMAL	NORMAL
SUBMATRIX	SS	SS	SS	SS	SS	SS	SS	SS	SS	SS	SS
TOP DEPTH	0	1	1	1	1	1	1	1	1	1	1
BOTTOM DEPTH	2	2	2	2	2	2	2	2	2	2	2
HERBICIDES (UG/KG)											
HEXACHLOROPHENE	0.99 U										
PENTACHLOROPHENOL	0.52 U										
METALS (MG/KG)											
ALUMINUM	13800 J										
ANTIMONY	0.78 U										
ARSENIC	8.8 J										
BARIUM	83.4 J										
BERYLLIUM	0.42 U										
CADMIUM	0.28 U										
CALCIUM	808 J										
CHROMIUM	15.9 J										
COBALT	4.7 J										
COPPER	13.1 J										
IRON	24000 J										
LEAD	13.4 J										
LITHIUM	10.7 J										
MAGNESIUM	2130 J										
MANGANESE	256 J										
MERCURY	0.048 J										
NICKEL	11.1 J										
POTASSIUM	672 J										
SELENIUM	0.47 U										
SILVER	0.13 U										
SODIUM	43.7 U										
STRONTIUM	13.5 J										
THALLIUM	0.19 U										
TIN	0.60 U										
TITANIUM	143 J										
VANADIUM	27.3 J										
ZINC	42.1 U										
METALS (UG/KG)											
LEAD											
MISCELLANEOUS PARAMETERS (%)											
PERCENT MOISTURE											
MISCELLANEOUS PARAMETERS (MEQ/100)											
CATION EXCHANGE CAPACITY											
MISCELLANEOUS PARAMETERS (MG/KG)											
TOTAL ORGANIC CARBON											
MISCELLANEOUS PARAMETERS (S.U.)											
PH											
PESTICIDES/PCBS (UG/KG)											
AROCLOR-1016	20 U										
AROCLOR-1221	40 U										
AROCLOR-1232	20 U										
AROCLOR-1242	20 U										
AROCLOR-1248	20 U										
AROCLOR-1254	20 U										
AROCLOR-1260	20 U										

TABLE A-1

SURFACE SOIL SAMPLE DATA
SWMU 16
NSA CRANE
CRANE, INDIANA

LOCATION	16SB039	16SB051	16SB052	16SB053	16SB054	16SB055	16SB056	16SB057	16SB058	16SB059	16SB060
SAMPLE ID	16SS0390002	16SS0510102	16SS0520102	16SS0530102	16SS0540102	16SS0550102	16SS0560102	16SS0570102	16SS0580102	16SS0590102	16SS0600102
SAMPLE DATE	20030328	20040813	20040812	20040812	20040813	20040812	20040812	20040813	20040813	20040813	20040811
ROUND	01	03	03	03	03	03	03	03	03	03	03
EVENT											
SAMPLE CODE	NORMAL	NORMAL	NORMAL	NORMAL	NORMAL	NORMAL	NORMAL	NORMAL	NORMAL	NORMAL	NORMAL
MATRIX	SO	SO	SO	SO	SO	SO	SO	SO	SO	SO	SO
SAMPLE TYPE	NORMAL	NORMAL	NORMAL	NORMAL	NORMAL	NORMAL	NORMAL	NORMAL	NORMAL	NORMAL	NORMAL
SUBMATRIX	SS	SS	SS	SS	SS	SS	SS	SS	SS	SS	SS
TOP DEPTH	0	1	1	1	1	1	1	1	1	1	1
BOTTOM DEPTH	2	2	2	2	2	2	2	2	2	2	2
PETROLEUM HYDROCARBONS (UG/KG)											
DRO (C08-C28)											
TPH (C06-C12)											
SEMIVOLATILES (UG/KG)											
1,2,4,5-TETRACHLOROBENZENE	78 U										
1,2,4-TRICHLOROBENZENE	78 U										
1,2-DICHLOROBENZENE	78 U										
1,3-DICHLOROBENZENE	78 U										
1,4-DICHLOROBENZENE	78 U										
1,4-NAPHTHOQUINONE	78 U										
1,4-PHENYLENEDIAMINE	78 UR										
1-NAPHTHYLAMINE	78 U										
2,2'-OXYBIS(1-CHLOROPROPANE)	78 U										
2,3,4,6-TETRACHLOROPHENOL	78 U										
2,4,5-TRICHLOROPHENOL	78 U										
2,4,6-TRICHLOROPHENOL	78 U										
2,4-DICHLOROPHENOL	78 U										
2,4-DIMETHYLPHENOL	78 U										
2,4-DINITROPHENOL	78 UJ										
2,6-DICHLOROPHENOL	78 U										
2-ACETYLAMINOFLUORENE	78 U										
2-CHLORONAPHTHALENE	78 U										
2-CHLOROPHENOL	78 U										
2-METHYLNAPHTHALENE	3.8 U										
2-METHYLPHENOL	78 U										
2-NAPHTHYLAMINE	78 U										
2-NITROANILINE	78 U										
2-NITROPHENOL	78 U										
2-PICOLINE	78 U										
3&4-METHYLPHENOL	78 U										
3,3'-DICHLOROBENZIDINE	78 U										
3,3'-DIMETHYLBENZIDINE	78 U										
3-METHYLCHOLANTHRENE	78 U										
3-NITROANILINE	78 U										
4,6-DINITRO-2-METHYLPHENOL	78 U										
4-AMINOBIPHENYL	78 U										
4-BROMOPHENYL PHENYL ETHER	78 U										
4-CHLORO-3-METHYLPHENOL	78 U										
4-CHLOROANILINE	78 U										
4-CHLOROPHENYL PHENYL ETHER	78 U										
4-NITROANILINE	78 U										
4-NITROPHENOL	78 U										
4-NITROQUINOLINE-1-OXIDE	78 UR										
5-NITRO-O-TOLUIDINE	78 UJ										
7,12-DIMETHYLBENZ(A)ANTHRACENE	78 U										
A,A-DIMETHYLPHENETHYLAMINE	78 UJ										
ACENAPHTHENE	3.8 U										
ACENAPHTHYLENE	3.8 U										
ACETOPHENONE	78 U										

TABLE A-1

SURFACE SOIL SAMPLE DATA
SWMU 16
NSA CRANE
CRANE, INDIANA

LOCATION	16SB039	16SB051	16SB052	16SB053	16SB054	16SB055	16SB056	16SB057	16SB058	16SB059	16SB060
SAMPLE ID	16SS0390002	16SS0510102	16SS0520102	16SS0530102	16SS0540102	16SS0550102	16SS0560102	16SS0570102	16SS0580102	16SS0590102	16SS0600102
SAMPLE DATE	20030328	20040813	20040812	20040812	20040813	20040812	20040812	20040813	20040813	20040813	20040811
ROUND	01	03	03	03	03	03	03	03	03	03	03
EVENT											
SAMPLE CODE	NORMAL	NORMAL	NORMAL	NORMAL	NORMAL	NORMAL	NORMAL	NORMAL	NORMAL	NORMAL	NORMAL
MATRIX	SO	SO	SO	SO	SO	SO	SO	SO	SO	SO	SO
SAMPLE TYPE	NORMAL	NORMAL	NORMAL	NORMAL	NORMAL	NORMAL	NORMAL	NORMAL	NORMAL	NORMAL	NORMAL
SUBMATRIX	SS	SS	SS	SS	SS	SS	SS	SS	SS	SS	SS
TOP DEPTH	0	1	1	1	1	1	1	1	1	1	1
BOTTOM DEPTH	2	2	2	2	2	2	2	2	2	2	2
ANILINE	78 U										
ANTHRACENE	3.8 U										
ARAMITE	78 U										
BENZO(A)ANTHRACENE	3.8 U										
BENZO(A)PYRENE	4 J										
BENZO(B)FLUORANTHENE	9										
BENZO(G,H,I)PERYLENE	3.8 U										
BENZO(K)FLUORANTHENE	3.8 U										
BENZYL ALCOHOL	78 UJ										
BIS(2-CHLOROETHOXY)METHANE	78 U										
BIS(2-CHLOROETHYL)ETHER	78 U										
BIS(2-ETHYLHEXYL)PHTHALATE	170 BU										
BUTYL BENZYL PHTHALATE	78 U										
CHLOROBENZILATE	78 U										
CHRYSENE	7 J										
DIALLATE	78 U										
DIBENZO(A,H)ANTHRACENE	3.8 U										
DIBENZOFURAN	78 U										
DIETHYL PHTHALATE	78 U										
DIMETHYL PHTHALATE	78 U										
DI-N-BUTYL PHTHALATE	78 U										
DI-N-OCTYL PHTHALATE	78 U										
DIPHENYLAMINE	78 U										
ETHYL METHANE SULFONATE	78 U										
FLUORANTHENE	3.8 U										
FLUORENE	3.8 U										
HEXACHLOROBENZENE	78 U										
HEXACHLOROBUTADIENE	78 U										
HEXACHLOROCYCLOPENTADIENE	78 UJ										
HEXACHLOROETHANE	78 U										
HEXACHLOROPROPENE	78 U										
INDENO(1,2,3-CD)PYRENE	3.8 U										
ISODRIN	78 U										
ISOPHORONE	78 U										
ISOSAFROLE	78 U										
KEPONE	78 UR										
METHAPYRILENE	78 UJ										
METHYL METHANE SULFONATE	78 U										
NAPHTHALENE	3.8 U										
N-NITROSODIETHYLAMINE	78 U										
N-NITROSODIMETHYLAMINE	78 U										
N-NITROSO-DI-N-BUTYLAMINE	78 U										
N-NITROSO-DI-N-PROPYLAMINE	78 U										
N-NITROSOMETHYLETHYLAMINE	78 U										
N-NITROSOMORPHOLINE	78 U										
N-NITROSOPIPERIDINE	78 U										
N-NITROSOPYRROLIDINE	78 U										
O,O,O-TRIETHYL PHOSPHOROTHIOATE	78 U										
O-TOLUIDINE	78 U										

TABLE A-1

SURFACE SOIL SAMPLE DATA
SWMU 16
NSA CRANE
CRANE, INDIANA

LOCATION	16SB039	16SB051	16SB052	16SB053	16SB054	16SB055	16SB056	16SB057	16SB058	16SB059	16SB060
SAMPLE ID	16SS0390002	16SS0510102	16SS0520102	16SS0530102	16SS0540102	16SS0550102	16SS0560102	16SS0570102	16SS0580102	16SS0590102	16SS0600102
SAMPLE DATE	20030328	20040813	20040812	20040812	20040813	20040812	20040812	20040813	20040813	20040813	20040811
ROUND	01	03	03	03	03	03	03	03	03	03	03
EVENT											
SAMPLE CODE	NORMAL	NORMAL	NORMAL	NORMAL	NORMAL	NORMAL	NORMAL	NORMAL	NORMAL	NORMAL	NORMAL
MATRIX	SO	SO	SO	SO	SO	SO	SO	SO	SO	SO	SO
SAMPLE TYPE	NORMAL	NORMAL	NORMAL	NORMAL	NORMAL	NORMAL	NORMAL	NORMAL	NORMAL	NORMAL	NORMAL
SUBMATRIX	SS	SS	SS	SS	SS	SS	SS	SS	SS	SS	SS
TOP DEPTH	0	1	1	1	1	1	1	1	1	1	1
BOTTOM DEPTH	2	2	2	2	2	2	2	2	2	2	2
PENTACHLOROBENZENE	78 U										
PENTACHLOROETHANE	78 U										
PENTACHLORONITROBENZENE	78 U										
PHENACETIN	78 U										
PHENANTHRENE	3.8 U										
PHENOL	78 U										
PRONAMIDE	78 U										
PYRENE	5 J										
PYRIDINE	78 U										
SAFROLE	78 U										
SOLVENT YELLOW 2	78 U										
VOLATILES (UG/KG)											
1,1,1,2-TETRACHLOROETHANE	1.2 U	1.09 U	0.933 U	0.888 U	1.05 U	0.93 U	1.02 U	0.993 U	0.945 U	1.01 U	1.14 U
1,1,1-TRICHLOROETHANE	1.2 U	1.09 U	0.933 U	0.888 U	1.05 U	0.93 U	1.02 U	0.993 U	0.945 U	1.01 U	1.14 U
1,1,2,2-TETRACHLOROETHANE	1.2 U	1.09 U	0.933 U	0.888 U	1.05 U	0.93 U	1.02 U	0.993 U	0.945 U	1.01 U	1.14 U
1,1,2-TRICHLOROETHANE	1.2 U	1.09 U	0.933 U	0.888 U	1.05 U	0.93 U	1.02 U	0.993 U	0.945 U	1.01 U	1.14 U
1,1,2-TRICHLOROTRIFLUOROETHANE											
1,1-DICHLOROETHANE	1.2 U	1.09 U	0.933 U	0.888 U	1.05 U	0.93 U	1.02 U	0.993 U	0.945 U	1.01 U	1.14 U
1,1-DICHLOROETHENE	1.2 U	1.09 U	0.933 U	0.888 U	1.05 U	0.93 U	1.02 U	0.993 U	0.945 U	1.01 U	1.14 U
1,2,3-TRICHLOROBENZENE											
1,2,3-TRICHLOROPROPANE	1.2 U	1.09 U	0.933 U	0.888 U	1.05 U	0.93 U	1.02 U	0.993 U	0.945 U	1.01 U	1.14 U
1,2,4-TRICHLOROBENZENE											
1,2-DIBROMO-3-CHLOROPROPANE	1.2 U	1.09 U	0.933 U	0.888 U	1.05 U	0.93 U	1.02 U	0.993 U	0.945 U	1.01 U	1.14 UR
1,2-DIBROMOETHANE	1.2 U	1.09 U	0.933 U	0.888 U	1.05 U	0.93 U	1.02 U	0.993 U	0.945 U	1.01 U	1.14 U
1,2-DICHLOROBENZENE											
1,2-DICHLOROETHANE	1.2 U	1.09 U	0.933 U	0.888 U	1.05 U	0.93 U	1.02 U	0.993 U	0.945 U	1.01 U	1.14 U
1,2-DICHLOROPROPANE	1.2 U	1.09 U	0.933 U	0.888 U	1.05 U	0.93 U	1.02 U	0.993 U	0.945 U	1.01 U	1.14 U
1,3-DICHLOROBENZENE											
1,4-DICHLOROBENZENE											
1,4-DIOXANE	120 U	101 U	101 U	87.3 U	107 U	92.7 U	99.3 U	94.6 U	109 U	98.7 U	105 U
2-BUTANONE	1.2 U	1.09 U	0.933 U	0.888 U	1.05 U	0.93 U	1.02 U	0.993 U	0.945 U	1.01 U	1.14 UR
2-HEXANONE	1.2 U	1.09 U	0.933 U	0.888 U	1.05 U	0.93 U	3 J	0.993 U	0.945 U	1.01 U	1.14 U
3-CHLOROPROPENE	1.2 U	1.09 U	0.933 U	0.888 U	1.05 U	0.93 U	1.02 U	0.993 U	0.945 U	1.01 U	1.14 U
4-METHYL-2-PENTANONE	1.2 U	1.09 U	0.933 U	0.888 U	1.05 U	0.93 U	1.02 U	0.993 U	0.945 U	1.01 U	1.14 U
ACETONE	1.2 UJ	1.09 U	3 J	1 J	1.05 U	0.93 U	1.02 U	0.993 U	0.945 U	1.01 U	13 U
ACETONITRILE	47 U	40.5 U	40.5 U	34.9 U	42.8 U	37.1 U	39.7 U	37.8 U	43.4 U	39.5 U	42 U
ACROLEIN	1.2 U	1.09 UR	0.933 UR	0.888 UR	1.05 UR	0.93 UR	1.02 UR	0.993 UR	0.945 UR	1.01 UR	1.14 UR
ACRYLONITRILE	1.2 U	1.09 U	0.933 U	0.888 U	1.05 U	0.93 U	1.02 U	0.993 U	0.945 U	1.01 U	1.14 UR
BENZENE	1.2 U	1.09 U	0.933 U	0.888 U	1.05 U	0.93 U	1.02 U	0.993 U	0.945 U	1.01 U	1.14 U
BROMODICHLOROMETHANE	1.2 U	1.09 U	0.933 U	0.888 U	1.05 U	0.93 U	1.02 U	0.993 U	0.945 U	1.01 U	1.14 U
BROMOFORM	1.2 U	1.09 U	0.933 U	0.888 U	1.05 U	0.93 U	1.02 U	0.993 U	0.945 U	1.01 U	1.14 U
BROMOMETHANE	1.2 UJ	1.09 U	0.933 U	0.888 U	1.05 U	0.93 U	1.02 U	0.993 U	0.945 U	1.01 U	1.14 U
CARBON DISULFIDE	1.2 UJ	1.09 U	0.933 U	0.888 U	1.05 U	0.93 U	1.02 U	0.993 U	0.945 U	1.01 U	1.14 U
CARBON TETRACHLORIDE	1.2 U	1.09 U	0.933 U	0.888 U	1.05 U	0.93 U	1.02 U	0.993 U	0.945 U	1.01 U	1.14 U
CHLOROBENZENE	1.2 U	1.09 U	0.933 U	0.888 U	1.05 U	0.93 U	1.02 U	0.993 U	0.945 U	1.01 U	1.14 U
CHLORODIBROMOMETHANE	1.2 U	1.09 U	0.933 U	0.888 U	1.05 U	0.93 U	1.02 U	0.993 U	0.945 U	1.01 U	1.14 U
CHLOROETHANE	1.2 U	1.09 U	0.933 U	0.888 U	1.05 U	0.93 U	1.02 U	0.993 U	0.945 U	1.01 U	1.14 U
CHLOROFORM	1.2 U	1.09 U	0.933 U	0.888 U	1.05 U	0.93 U	1.02 U	0.993 U	0.945 U	1.01 U	1.14 U
CHLOROMETHANE	1.2 U	1.09 U	0.933 U	0.888 U	1.05 U	0.93 U	1.02 U	0.993 U	0.945 U	1.01 U	1.14 U

TABLE A-1

SURFACE SOIL SAMPLE DATA
SWMU 16
NSA CRANE
CRANE, INDIANA

LOCATION	**16SB039**	**16SB051**	**16SB052**	**16SB053**	**16SB054**	**16SB055**	**16SB056**	**16SB057**	**16SB058**	**16SB059**	**16SB060**
SAMPLE ID	**16SS0390002**	**16SS0510102**	**16SS0520102**	**16SS0530102**	**16SS0540102**	**16SS0550102**	**16SS0560102**	**16SS0570102**	**16SS0580102**	**16SS0590102**	**16SS0600102**
SAMPLE DATE	**20030328**	**20040813**	**20040812**	**20040812**	**20040813**	**20040812**	**20040812**	**20040813**	**20040813**	**20040813**	**20040811**
ROUND	**01**	**03**	**03**	**03**	**03**	**03**	**03**	**03**	**03**	**03**	**03**
EVENT											
SAMPLE CODE	**NORMAL**	**NORMAL**	**NORMAL**	**NORMAL**	**NORMAL**	**NORMAL**	**NORMAL**	**NORMAL**	**NORMAL**	**NORMAL**	**NORMAL**
MATRIX	**SO**	**SO**	**SO**	**SO**	**SO**	**SO**	**SO**	**SO**	**SO**	**SO**	**SO**
SAMPLE TYPE	**NORMAL**	**NORMAL**	**NORMAL**	**NORMAL**	**NORMAL**	**NORMAL**	**NORMAL**	**NORMAL**	**NORMAL**	**NORMAL**	**NORMAL**
SUBMATRIX	**SS**	**SS**	**SS**	**SS**	**SS**	**SS**	**SS**	**SS**	**SS**	**SS**	**SS**
TOP DEPTH	**0**	**1**	**1**	**1**	**1**	**1**	**1**	**1**	**1**	**1**	**1**
BOTTOM DEPTH	**2**	**2**	**2**	**2**	**2**	**2**	**2**	**2**	**2**	**2**	**2**
CHLOROPRENE	1.2 U	1.09 U	0.933 U	0.888 U	1.05 U	0.93 U	1.02 U	0.993 U	0.945 U	1.01 U	1.14 U
CIS-1,2-DICHLOROETHENE	23	1.09 U	0.933 U	0.888 U	1.05 U	0.93 U	1.02 U	0.993 U	0.945 U	1.01 U	17
CIS-1,3-DICHLOROPROPENE	1.2 U	1.09 U	0.933 U	0.888 U	1.05 U	0.93 U	1.02 U	0.993 U	0.945 U	1.01 U	1.14 U
CYCLOHEXANE											
DIBROMOMETHANE	1.2 U	1.09 U	0.933 U	0.888 U	1.05 U	0.93 U	1.02 U	0.993 U	0.945 U	1.01 U	1.14 U
DICHLORODIFLUOROMETHANE	1.2 UJ	1.09 U	2 J	7	2 J	7	7	0.993 U	0.945 U	1.01 U	1.14 U
ETHYL METHACRYLATE	1.2 U	1.09 U	0.933 U	0.888 U	1.05 U	0.93 U	1.02 U	0.993 U	0.945 U	1.01 U	1.14 U
ETHYLBENZENE	1.2 U	1.09 U	0.933 U	0.888 U	1.05 U	0.93 U	1.02 U	0.993 U	0.945 U	1.01 U	1.14 U
ISOBUTANOL	47 U	40.5 U	40.5 U	34.9 U	42.8 U	37.1 U	39.7 U	37.8 U	43.4 U	39.5 U	42 U
ISOPROPYLBENZENE											
METHACRYLONITRILE	1.2 U	1.09 U	0.933 U	0.888 U	1.05 U	0.93 U	1.02 U	0.993 U	0.945 U	1.01 U	1.14 UR
METHYL ACETATE											
METHYL IODIDE	1.2 UJ	1.09 U	0.933 U	0.888 U	1.05 U	0.93 U	1.02 U	0.993 U	0.945 U	1.01 U	1.14 U
METHYL METHACRYLATE	1.2 U	1.09 U	0.933 U	0.888 U	1.05 U	0.93 U	1.02 U	0.993 U	0.945 U	1.01 U	1.14 U
METHYL TERT-BUTYL ETHER											
METHYLENE CHLORIDE	3 BU	1.09 UJ	0.933 UJ	0.888 UJ	1.05 UJ	0.93 UJ	1.02 UJ	0.993 UJ	0.945 UJ	1.01 UJ	1.14 U
PROPIONITRILE	47 U	40.5 U	40.5 U	34.9 U	42.8 U	37.1 U	39.7 U	37.8 U	43.4 U	39.5 U	42 U
STYRENE	1.2 U	1.09 U	0.933 U	0.888 U	1.05 U	0.93 U	1.02 U	0.993 U	0.945 U	1.01 U	1.14 U
TETRACHLOROETHENE	1.2 U	1.09 U	0.933 U	0.888 U	1.05 U	0.93 U	1.02 U	0.993 U	0.945 U	1.01 U	1.14 U
TOLUENE	1.2 U	1.09 U	0.933 U	0.888 U	1.05 U	0.93 U	1.02 U	0.993 U	0.945 U	1.01 U	1.14 U
TOTAL XYLENES	1.2 U	1.09 U	0.933 U	0.888 U	1.05 U	0.93 U	1.02 U	0.993 U	0.945 U	1.01 U	1.14 U
TRANS-1,2-DICHLOROETHENE	2 J	1.09 U	0.933 U	0.888 U	1.05 U	0.93 U	1.02 U	0.993 U	0.945 U	1.01 U	1.14 U
TRANS-1,3-DICHLOROPROPENE	1.2 U	1.09 U	0.933 U	0.888 U	1.05 U	0.93 U	1.02 U	0.993 U	0.945 U	1.01 U	1.14 U
TRANS-1,4-DICHLORO-2-BUTENE	1.2 U	1.09 U	0.933 U	0.888 U	1.05 U	0.93 U	1.02 U	0.993 U	0.945 U	1.01 U	1.14 U
TRICHLOROETHENE	86	1.09 U	8	61	67	64	34	0.993 U	0.945 U	13	9
TRICHLOROFLUOROMETHANE	2 J	1.09 U	0.933 U	0.888 U	1.05 U	0.93 U	1.02 U	0.993 U	0.945 U	1.01 U	1.14 U
VINYL ACETATE	1.2 U	1.09 U	0.933 U	0.888 U	1.05 U	0.93 U	1.02 U	0.993 U	0.945 U	1.01 U	1.14 U
VINYL CHLORIDE	1.2 U	1.09 U	0.933 U	0.888 U	1.05 U	0.93 U	1.02 U	0.993 U	0.945 U	1.01 U	1.14 U

TABLE A-1

SURFACE SOIL SAMPLE DATA
SWMU 16
NSA CRANE
CRANE, INDIANA

LOCATION	16SB061	16SB062	16SB063	16SB064	16SB065	16SB066	16SB067	16SB068	16SB069	16SB070	16SB071
SAMPLE ID	16SS0610102	16SS0620102	16SS0630102	16SS0640102	16SS0650102	16SS0660102	16SS0670102	16SS0680102	16SS0690102	16SS0700102	16SS0710102
SAMPLE DATE	20040811	20040813	20040811	20040811	20040811	20040812	20040812	20040812	20040812	20040812	20040812
ROUND	03	03	03	03	03	03	03	03	03	03	03
EVENT											
SAMPLE CODE	NORMAL	NORMAL	NORMAL	NORMAL	NORMAL	NORMAL	NORMAL	NORMAL	NORMAL	NORMAL	NORMAL
MATRIX	SO	SO	SO	SO	SO	SO	SO	SO	SO	SO	SO
SAMPLE TYPE	NORMAL	NORMAL	NORMAL	NORMAL	NORMAL	NORMAL	NORMAL	NORMAL	NORMAL	NORMAL	NORMAL
SUBMATRIX	SS	SS	SS	SS	SS	SS	SS	SS	SS	SS	SS
TOP DEPTH	1	1	1	1	1	1	1	1	1	1	1
BOTTOM DEPTH	2	2	2	2	2	2	2	2	2	2	2
DIOXINS/FURANS (NG/KG)											
1,2,3,4,6,7,8,9-OCDD											
1,2,3,4,6,7,8,9-OCDF											
1,2,3,4,6,7,8-HPCDD											
1,2,3,4,6,7,8-HPCDF											
1,2,3,4,7,8,9-HPCDF											
1,2,3,4,7,8-HXCDD											
1,2,3,4,7,8-HXCDF											
1,2,3,6,7,8-HXCDD											
1,2,3,6,7,8-HXCDF											
1,2,3,7,8,9-HXCDD											
1,2,3,7,8,9-HXCDF											
1,2,3,7,8-PECDD											
1,2,3,7,8-PECDF											
2,3,4,6,7,8-HXCDF											
2,3,4,7,8-PECDF											
2,3,7,8-TCDD											
2,3,7,8-TCDF											
TEQ BIRD											
TEQ BIRD HALFND											
TEQ MAMMAL											
TEQ MAMMAL HALFND											
TEQ WHO-2007											
TEQ WHO-2007 - HALFND											
TOTAL HPCDD											
TOTAL HPCDF											
TOTAL HXCDD											
TOTAL HXCDF											
TOTAL PECDD											
TOTAL PECDF											
TOTAL TCDD											
TOTAL TCDF											
EXPLOSIVES (MG/KG)											
1,3,5-TRINITROBENZENE											
1,3-DINITROBENZENE											
2,4,6-TRINITROTOLUENE											
2,4-DINITROTOLUENE											
2,6-DINITROTOLUENE											
2-AMINO-4,6-DINITROTOLUENE											
2-NITROTOLUENE											
3-NITROTOLUENE											
4-AMINO-2,6-DINITROTOLUENE											
4-NITROTOLUENE											
HMX											
NITROBENZENE											
PICRAMIC ACID											
PICRIC ACID											
RDX											
TETRYL											

TABLE A-1

SURFACE SOIL SAMPLE DATA
SWMU 16
NSA CRANE
CRANE, INDIANA

LOCATION	16SB061	16SB062	16SB063	16SB064	16SB065	16SB066	16SB067	16SB068	16SB069	16SB070	16SB071
SAMPLE ID	16SS0610102	16SS0620102	16SS0630102	16SS0640102	16SS0650102	16SS0660102	16SS0670102	16SS0680102	16SS0690102	16SS0700102	16SS0710102
SAMPLE DATE	20040811	20040813	20040811	20040811	20040811	20040812	20040812	20040812	20040812	20040812	20040812
ROUND	03	03	03	03	03	03	03	03	03	03	03
EVENT											
SAMPLE CODE	NORMAL	NORMAL	NORMAL	NORMAL	NORMAL	NORMAL	NORMAL	NORMAL	NORMAL	NORMAL	NORMAL
MATRIX	SO	SO	SO	SO	SO	SO	SO	SO	SO	SO	SO
SAMPLE TYPE	NORMAL	NORMAL	NORMAL	NORMAL	NORMAL	NORMAL	NORMAL	NORMAL	NORMAL	NORMAL	NORMAL
SUBMATRIX	SS	SS	SS	SS	SS	SS	SS	SS	SS	SS	SS
TOP DEPTH	1	1	1	1	1	1	1	1	1	1	1
BOTTOM DEPTH	2	2	2	2	2	2	2	2	2	2	2
HERBICIDES (UG/KG)											
HEXACHLOROPHENE											
PENTACHLOROPHENOL											
METALS (MG/KG)											
ALUMINUM											
ANTIMONY											
ARSENIC											
BARIUM											
BERYLLIUM											
CADMIUM											
CALCIUM											
CHROMIUM											
COBALT											
COPPER											
IRON											
LEAD											
LITHIUM											
MAGNESIUM											
MANGANESE											
MERCURY											
NICKEL											
POTASSIUM											
SELENIUM											
SILVER											
SODIUM											
STRONTIUM											
THALLIUM											
TIN											
TITANIUM											
VANADIUM											
ZINC											
METALS (UG/KG)											
LEAD											
MISCELLANEOUS PARAMETERS (%)											
PERCENT MOISTURE											
MISCELLANEOUS PARAMETERS (MEQ/100)											
CATION EXCHANGE CAPACITY											
MISCELLANEOUS PARAMETERS (MG/KG)											
TOTAL ORGANIC CARBON											
MISCELLANEOUS PARAMETERS (S.U.)											
PH											
PESTICIDES/PCBS (UG/KG)											
AROCLOR-1016											
AROCLOR-1221											
AROCLOR-1232											
AROCLOR-1242											
AROCLOR-1248											
AROCLOR-1254											
AROCLOR-1260											

TABLE A-1

SURFACE SOIL SAMPLE DATA
SWMU 16
NSA CRANE
CRANE, INDIANA

LOCATION	16SB061	16SB062	16SB063	16SB064	16SB065	16SB066	16SB067	16SB068	16SB069	16SB070	16SB071
SAMPLE ID	16SS0610102	16SS0620102	16SS0630102	16SS0640102	16SS0650102	16SS0660102	16SS0670102	16SS0680102	16SS0690102	16SS0700102	16SS0710102
SAMPLE DATE	20040811	20040813	20040811	20040811	20040811	20040812	20040812	20040812	20040812	20040812	20040812
ROUND	03	03	03	03	03	03	03	03	03	03	03
EVENT											
SAMPLE CODE	NORMAL	NORMAL	NORMAL	NORMAL	NORMAL	NORMAL	NORMAL	NORMAL	NORMAL	NORMAL	NORMAL
MATRIX	SO	SO	SO	SO	SO	SO	SO	SO	SO	SO	SO
SAMPLE TYPE	NORMAL	NORMAL	NORMAL	NORMAL	NORMAL	NORMAL	NORMAL	NORMAL	NORMAL	NORMAL	NORMAL
SUBMATRIX	SS	SS	SS	SS	SS	SS	SS	SS	SS	SS	SS
TOP DEPTH	1	1	1	1	1	1	1	1	1	1	1
BOTTOM DEPTH	2	2	2	2	2	2	2	2	2	2	2
PETROLEUM HYDROCARBONS (UG/KG)											
DRO (C08-C28)											
TPH (C06-C12)											
SEMIVOLATILES (UG/KG)											
1,2,4,5-TETRACHLOROBENZENE											
1,2,4-TRICHLOROBENZENE											
1,2-DICHLOROBENZENE											
1,3-DICHLOROBENZENE											
1,4-DICHLOROBENZENE											
1,4-NAPHTHOQUINONE											
1,4-PHENYLENEDIAMINE											
1-NAPHTHYLAMINE											
2,2'-OXYBIS(1-CHLOROPROPANE)											
2,3,4,6-TETRACHLOROPHENOL											
2,4,5-TRICHLOROPHENOL											
2,4,6-TRICHLOROPHENOL											
2,4-DICHLOROPHENOL											
2,4-DIMETHYLPHENOL											
2,4-DINITROPHENOL											
2,6-DICHLOROPHENOL											
2-ACETYLAMINOFLUORENE											
2-CHLORONAPHTHALENE											
2-CHLOROPHENOL											
2-METHYLNAPHTHALENE											
2-METHYLPHENOL											
2-NAPHTHYLAMINE											
2-NITROANILINE											
2-NITROPHENOL											
2-PICOLINE											
3&4-METHYLPHENOL											
3,3'-DICHLOROBENZIDINE											
3,3'-DIMETHYLBENZIDINE											
3-METHYLCHOLANTHRENE											
3-NITROANILINE											
4,6-DINITRO-2-METHYLPHENOL											
4-AMINOBIPHENYL											
4-BROMOPHENYL PHENYL ETHER											
4-CHLORO-3-METHYLPHENOL											
4-CHLOROANILINE											
4-CHLOROPHENYL PHENYL ETHER											
4-NITROANILINE											
4-NITROPHENOL											
4-NITROQUINOLINE-1-OXIDE											
5-NITRO-O-TOLUIDINE											
7,12-DIMETHYLBENZ(A)ANTHRACENE											
A,A-DIMETHYLPHENETHYLAMINE											
ACENAPHTHENE											
ACENAPHTHYLENE											
ACETOPHENONE											

TABLE A-1

SURFACE SOIL SAMPLE DATA
SWMU 16
NSA CRANE
CRANE, INDIANA

LOCATION	16SB061	16SB062	16SB063	16SB064	16SB065	16SB066	16SB067	16SB068	16SB069	16SB070	16SB071
SAMPLE ID	16SS0610102	16SS0620102	16SS0630102	16SS0640102	16SS0650102	16SS0660102	16SS0670102	16SS0680102	16SS0690102	16SS0700102	16SS0710102
SAMPLE DATE	20040811	20040813	20040811	20040811	20040811	20040812	20040812	20040812	20040812	20040812	20040812
ROUND	03	03	03	03	03	03	03	03	03	03	03
EVENT											
SAMPLE CODE	NORMAL	NORMAL	NORMAL	NORMAL	NORMAL	NORMAL	NORMAL	NORMAL	NORMAL	NORMAL	NORMAL
MATRIX	SO	SO	SO	SO	SO	SO	SO	SO	SO	SO	SO
SAMPLE TYPE	NORMAL	NORMAL	NORMAL	NORMAL	NORMAL	NORMAL	NORMAL	NORMAL	NORMAL	NORMAL	NORMAL
SUBMATRIX	SS	SS	SS	SS	SS	SS	SS	SS	SS	SS	SS
TOP DEPTH	1	1	1	1	1	1	1	1	1	1	1
BOTTOM DEPTH	2	2	2	2	2	2	2	2	2	2	2
ANILINE											
ANTHRACENE											
ARAMITE											
BENZO(A)ANTHRACENE											
BENZO(A)PYRENE											
BENZO(B)FLUORANTHENE											
BENZO(G,H,I)PERYLENE											
BENZO(K)FLUORANTHENE											
BENZYL ALCOHOL											
BIS(2-CHLOROETHOXY)METHANE											
BIS(2-CHLOROETHYL)ETHER											
BIS(2-ETHYLHEXYL)PHTHALATE											
BUTYL BENZYL PHTHALATE											
CHLOROBENZILATE											
CHRYSENE											
DIALLATE											
DIBENZO(A,H)ANTHRACENE											
DIBENZOFURAN											
DIETHYL PHTHALATE											
DIMETHYL PHTHALATE											
DI-N-BUTYL PHTHALATE											
DI-N-OCTYL PHTHALATE											
DIPHENYLAMINE											
ETHYL METHANE SULFONATE											
FLUORANTHENE											
FLUORENE											
HEXACHLOROBENZENE											
HEXACHLOROBUTADIENE											
HEXACHLOROCYCLOPENTADIENE											
HEXACHLOROETHANE											
HEXACHLOROPROPENE											
INDENO(1,2,3-CD)PYRENE											
ISODRIN											
ISOPHORONE											
ISOSAFROLE											
KEPONE											
METHAPYRILENE											
METHYL METHANE SULFONATE											
NAPHTHALENE											
N-NITROSODIETHYLAMINE											
N-NITROSODIMETHYLAMINE											
N-NITROSO-DI-N-BUTYLAMINE											
N-NITROSO-DI-N-PROPYLAMINE											
N-NITROSOMETHYLETHYLAMINE											
N-NITROSOMORPHOLINE											
N-NITROSOPIPERIDINE											
N-NITROSOPYRROLIDINE											
O,O,O-TRIETHYL PHOSPHOROTHIOATE											
O-TOLUIDINE											

TABLE A-1

SURFACE SOIL SAMPLE DATA
SWMU 16
NSA CRANE
CRANE, INDIANA

LOCATION	16SB061	16SB062	16SB063	16SB064	16SB065	16SB066	16SB067	16SB068	16SB069	16SB070	16SB071
SAMPLE ID	16SS0610102	16SS0620102	16SS0630102	16SS0640102	16SS0650102	16SS0660102	16SS0670102	16SS0680102	16SS0690102	16SS0700102	16SS0710102
SAMPLE DATE	20040811	20040813	20040811	20040811	20040811	20040812	20040812	20040812	20040812	20040812	20040812
ROUND	03	03	03	03	03	03	03	03	03	03	03
EVENT											
SAMPLE CODE	NORMAL	NORMAL	NORMAL	NORMAL	NORMAL	NORMAL	NORMAL	NORMAL	NORMAL	NORMAL	NORMAL
MATRIX	SO	SO	SO	SO	SO	SO	SO	SO	SO	SO	SO
SAMPLE TYPE	NORMAL	NORMAL	NORMAL	NORMAL	NORMAL	NORMAL	NORMAL	NORMAL	NORMAL	NORMAL	NORMAL
SUBMATRIX	SS	SS	SS	SS	SS	SS	SS	SS	SS	SS	SS
TOP DEPTH	1	1	1	1	1	1	1	1	1	1	1
BOTTOM DEPTH	2	2	2	2	2	2	2	2	2	2	2
PENTACHLOROBENZENE											
PENTACHLOROETHANE											
PENTACHLORONITROBENZENE											
PHENACETIN											
PHENANTHRENE											
PHENOL											
PRONAMIDE											
PYRENE											
PYRIDINE											
SAFROLE											
SOLVENT YELLOW 2											
VOLATILES (UG/KG)											
1,1,1,2-TETRACHLOROETHANE	1.19 U	1 U	1.01 U	1.05 U	1.17 U	1.26 U	1.19 U	0.963 U	0.995 U	0.923 U	0.943 UJ
1,1,1-TRICHLOROETHANE	1.19 U	1 U	1.01 U	1.05 U	1.17 U	1.26 U	1.19 U	0.963 U	0.995 U	0.923 U	0.943 UJ
1,1,2,2-TETRACHLOROETHANE	1.19 U	1 U	1.01 U	1.05 U	1.17 U	1.26 U	1.19 U	0.963 U	0.995 U	0.923 U	0.943 UJ
1,1,2-TRICHLOROETHANE	1.19 U	1 U	1.01 U	1.05 U	1.17 U	1.26 U	1.19 U	0.963 U	0.995 U	0.923 U	0.943 UJ
1,1,2-TRICHLOROTRIFLUOROETHANE											
1,1-DICHLOROETHANE	1.19 U	1 U	1.01 U	1.05 U	1.17 U	1.26 U	1.19 U	0.963 U	0.995 U	0.923 U	0.943 UJ
1,1-DICHLOROETHENE	1.19 U	1 U	1.01 U	1.05 U	1.17 U	1.26 U	1.19 U	0.963 U	0.995 U	0.923 U	0.943 UJ
1,2,3-TRICHLOROBENZENE											
1,2,3-TRICHLOROPROPANE	1.19 U	1 U	1.01 U	1.05 U	1.17 U	1.26 U	1.19 U	0.963 U	0.995 U	0.923 U	0.943 UJ
1,2,4-TRICHLOROBENZENE											
1,2-DIBROMO-3-CHLOROPROPANE	1.19 U	1 U	1.01 UR	1.05 UR	1.17 UR	1.26 U	1.19 U	0.963 U	0.995 U	0.923 U	0.943 UJ
1,2-DIBROMOETHANE	1.19 U	1 U	1.01 U	1.05 U	1.17 U	1.26 U	1.19 U	0.963 U	0.995 UJ	0.923 U	0.943 UJ
1,2-DICHLOROBENZENE											
1,2-DICHLOROETHANE	1.19 U	1 U	1.01 U	1.05 U	1.17 U	1.26 U	1.19 U	0.963 U	0.995 U	0.923 U	0.943 UJ
1,2-DICHLOROPROPANE	1.19 U	1 U	1.01 U	1.05 U	1.17 U	1.26 U	1.19 U	0.963 U	0.995 U	0.923 U	0.943 UJ
1,3-DICHLOROBENZENE											
1,4-DICHLOROBENZENE											
1,4-DIOXANE	114 U	94.2 U	102 U	105 U	114 U	108 U	110 U	101 U	107 U	96.5 U	99.7 UJ
2-BUTANONE	1.1 J	1 U	1.01 UR	1.05 UR	1.17 UR	1.26 U	4 J	2 J	0.995 U	0.923 U	0.943 UJ
2-HEXANONE	1.19 U	1 U	1.01 U	1.05 U	1.17 U	1.26 U	1.19 U	0.963 U	0.995 U	0.923 U	0.943 UJ
3-CHLOROPROPENE	1.19 U	1 U	1.01 U	1.05 U	1.17 U	1.26 U	1.19 U	0.963 U	0.995 U	0.923 U	0.943 UJ
4-METHYL-2-PENTANONE	1.19 U	1 U	1.01 U	1.05 U	1.17 U	1.26 U	1.19 U	0.963 U	0.995 U	0.923 U	0.943 UJ
ACETONE	10 U	1 U	1.01 UR	1.1 U	1.17 UR	51 BJ	33 BJ	25 BJ	13 BU	4 U	15 J
ACETONITRILE	45.5 U	37.7 U	40.7 U	41.9 U	45.8 U	43.1 UJ	43.9 UJ	40.4 UJ	42.7 UJ	38.6 U	39.9 UJ
ACROLEIN	1.19 UR	1 UR	1.01 UR	1.05 UR	1.17 UR	1.26 UR	1.19 UR	0.963 UR	0.995 UR	0.923 UR	0.943 UR
ACRYLONITRILE	1.19 U	1 U	1.01 UR	1.05 UR	1.17 UR	1.26 U	1.19 U	0.963 U	0.995 U	0.923 U	0.943 UJ
BENZENE	1.19 U	1 U	1.01 U	1.05 U	1.17 U	1.26 U	1.19 U	0.963 U	0.995 U	0.923 U	0.943 UJ
BROMODICHLOROMETHANE	1.19 U	1 U	1.01 U	1.05 U	1.17 U	1.26 U	1.19 U	0.963 U	0.995 U	0.923 U	0.943 UJ
BROMOFORM	1.19 U	1 U	1.01 U	1.05 U	1.17 U	1.26 U	1.19 U	0.963 U	0.995 U	0.923 U	0.943 UJ
BROMOMETHANE	1.19 UJ	1 U	1.01 U	1.05 U	1.17 U	1.26 UJ	1.19 UJ	0.963 UJ	0.995 UJ	0.923 UJ	0.943 UJ
CARBON DISULFIDE	1.19 U	1 U	1.01 U	1.05 U	1.17 U	1.26 U	1.19 U	0.963 U	0.995 U	0.923 U	0.943 UJ
CARBON TETRACHLORIDE	1.19 U	1 U	1.01 U	1.05 U	1.17 U	1.26 U	1.19 U	0.963 U	0.995 U	0.923 U	0.943 UJ
CHLOROBENZENE	1.19 U	1 U	1.01 U	1.05 U	1.17 U	1.26 U	1.19 U	0.963 U	0.995 U	0.923 U	0.943 UJ
CHLORODIBROMOMETHANE	1.19 U	1 U	1.01 U	1.05 U	1.17 U	1.26 U	1.19 U	0.963 U	0.995 U	0.923 U	0.943 UJ
CHLOROETHANE	1.19 U	1 U	1.01 U	1.05 U	1.17 U	1.26 U	1.19 U	0.963 U	0.995 U	0.923 U	0.943 UJ
CHLOROFORM	1.19 U	1 U	1.01 U	1.05 U	1.17 U	1.26 U	1.19 U	0.963 U	0.995 U	0.923 U	0.943 UJ
CHLOROMETHANE	1.19 U	1 U	1.01 U	1.05 U	1.17 U	1.26 U	1.19 U	0.963 U	0.995 U	0.923 U	0.943 UJ

TABLE A-1

SURFACE SOIL SAMPLE DATA
SWMU 16
NSA CRANE
CRANE, INDIANA

LOCATION	**16SB061**	**16SB062**	**16SB063**	**16SB064**	**16SB065**	**16SB066**	**16SB067**	**16SB068**	**16SB069**	**16SB070**	**16SB071**
SAMPLE ID	**16SS0610102**	**16SS0620102**	**16SS0630102**	**16SS0640102**	**16SS0650102**	**16SS0660102**	**16SS0670102**	**16SS0680102**	**16SS0690102**	**16SS0700102**	**16SS0710102**
SAMPLE DATE	**20040811**	**20040813**	**20040811**	**20040811**	**20040811**	**20040812**	**20040812**	**20040812**	**20040812**	**20040812**	**20040812**
ROUND	**03**	**03**	**03**	**03**	**03**	**03**	**03**	**03**	**03**	**03**	**03**
EVENT											
SAMPLE CODE	**NORMAL**	**NORMAL**	**NORMAL**	**NORMAL**	**NORMAL**	**NORMAL**	**NORMAL**	**NORMAL**	**NORMAL**	**NORMAL**	**NORMAL**
MATRIX	**SO**	**SO**	**SO**	**SO**	**SO**	**SO**	**SO**	**SO**	**SO**	**SO**	**SO**
SAMPLE TYPE	**NORMAL**	**NORMAL**	**NORMAL**	**NORMAL**	**NORMAL**	**NORMAL**	**NORMAL**	**NORMAL**	**NORMAL**	**NORMAL**	**NORMAL**
SUBMATRIX	**SS**	**SS**	**SS**	**SS**	**SS**	**SS**	**SS**	**SS**	**SS**	**SS**	**SS**
TOP DEPTH	**1**	**1**	**1**	**1**	**1**	**1**	**1**	**1**	**1**	**1**	**1**
BOTTOM DEPTH	**2**	**2**	**2**	**2**	**2**	**2**	**2**	**2**	**2**	**2**	**2**
CHLOROPRENE	1.19 U	1 U	1.01 U	1.05 U	1.17 U	1.26 U	1.19 U	0.963 U	0.995 U	0.923 U	0.943 UJ
CIS-1,2-DICHLOROETHENE	1.1 J	1 U	1.01 U	1.05 U	1.17 U	73	3 J	5	0.995 U	0.923 U	0.943 UJ
CIS-1,3-DICHLOROPROPENE	1.19 U	1 U	1.01 U	1.05 U	1.17 U	1.26 U	1.19 U	0.963 U	0.995 U	0.923 U	0.943 UJ
CYCLOHEXANE											
DIBROMOMETHANE	1.19 U	1 U	1.01 U	1.05 U	1.17 U	1.26 U	1.19 U	0.963 U	0.995 U	0.923 U	0.943 UJ
DICHLORODIFLUOROMETHANE	1.19 U	1 U	1.01 U	2 J	2 J	1.26 U	4	2 J	0.995 U	0.923 U	20 J
ETHYL METHACRYLATE	1.19 U	1 U	1.01 U	1.05 U	1.17 U	1.26 U	1.19 U	0.963 U	0.995 U	0.923 U	0.943 UJ
ETHYLBENZENE	1.19 U	1 U	1.01 U	1.05 U	1.17 U	1.26 U	1.19 U	0.963 U	0.995 U	0.923 U	0.943 UJ
ISOBUTANOL	45.5 U	37.7 U	40.7 U	41.9 U	45.8 U	43.1 U	43.9 U	40.4 U	42.7 U	38.6 U	39.9 UJ
ISOPROPYLBENZENE											
METHACRYLONITRILE	1.19 U	1 U	1.01 UR	1.05 UR	1.17 UR	1.26 U	1.19 U	0.963 U	0.995 U	0.923 U	0.943 UJ
METHYL ACETATE											
METHYL IODIDE	1.19 U	1 U	1.01 U	1.05 U	1.17 U	1.26 U	1.19 U	0.963 U	0.995 U	0.923 U	0.943 UJ
METHYL METHACRYLATE	1.19 U	1 U	1.01 U	1.05 U	1.17 U	1.26 U	1.19 U	0.963 U	0.995 U	0.923 U	0.943 UJ
METHYL TERT-BUTYL ETHER											
METHYLENE CHLORIDE	1.19 U	1 UJ	1.01 U	1.05 U	1.17 U	1.26 U	3 BU	2 BU	0.995 U	2 U	3 J
PROPIONITRILE	45.5 U	37.7 U	40.7 U	41.9 U	45.8 U	43.1 U	43.9 U	40.4 U	42.7 U	38.6 U	39.9 UJ
STYRENE	1.19 U	1 U	1.01 U	1.05 U	1.17 U	1.26 U	1.19 U	0.963 U	0.995 U	0.923 U	0.943 UJ
TETRACHLOROETHENE	1.19 U	1 U	1.01 U	1.05 U	1.17 U	1.26 U	1.19 U	0.963 U	0.995 U	0.923 U	0.943 UJ
TOLUENE	1.19 U	1 U	1.01 U	1.05 U	1.17 U	1.26 U	1.19 U	0.963 U	0.995 U	0.923 U	0.943 UJ
TOTAL XYLENES	1.19 U	1 U	1.01 U	1.05 U	1.17 U	1.26 U	1.19 U	0.963 U	0.995 U	0.923 U	0.943 UJ
TRANS-1,2-DICHLOROETHENE	1.19 U	1 U	1.01 U	1.05 U	1.17 U	1.26 J	1.19 U	0.963 U	0.995 U	0.923 U	0.943 UJ
TRANS-1,3-DICHLOROPROPENE	1.19 U	1 U	1.01 U	1.05 U	1.17 U	1.26 U	1.19 U	0.963 U	0.995 U	0.923 U	0.943 UJ
TRANS-1,4-DICHLORO-2-BUTENE	1.19 U	1 U	1.01 U	1.05 U	1.17 U	1.26 U	1.19 U	0.963 U	0.995 U	0.923 U	0.943 UJ
TRICHLOROETHENE	3 J	1 U	1.01 U	1.05 U	1.17 U	34	3 J	0.963 U	0.995 U	0.923 U	0.943 UJ
TRICHLOROFLUOROMETHANE	1.19 U	1 U	1.01 U	1.05 U	1.17 U	1.26 U	1.19 U	0.963 U	0.995 U	0.923 U	3 J
VINYL ACETATE	1.19 U	1 U	1.01 U	1.05 U	1.17 U	1.26 U	1.19 U	0.963 U	0.995 U	0.923 U	0.943 UJ
VINYL CHLORIDE	1.19 U	1 U	1.01 U	1.05 U	1.17 U	1.26 U	1.19 U	0.963 U	0.995 U	0.923 U	0.943 UJ

TABLE A-1

SURFACE SOIL SAMPLE DATA
SWMU 16
NSA CRANE
CRANE, INDIANA

LOCATION	16SB072	16SB073	16SB074	16SB074	16SB075	16SB076	16SB077	16SB078	16SB098	16SB099	16SB126
SAMPLE ID	16SS0720102	16SS0730102	16SS0740102	16SS0740102-D	16SS0750102	16SS0760102	16SS0770102	16SS0780102	16SS0980102	16SS0990102	16SS1260002
SAMPLE DATE	20040812	20040812	20040817	20040817	20040812	20040812	20040812	20040812	20040816	20040816	20110824
ROUND	03	03	03	03	03	03	03	03	03	03	
EVENT											
SAMPLE CODE	NORMAL	NORMAL	NORMAL	DUP	NORMAL	NORMAL	NORMAL	NORMAL	NORMAL	NORMAL	NORMAL
MATRIX	SO	SO	SO	SO	SO	SO	SO	SO	SO	SO	SO
SAMPLE TYPE	NORMAL	NORMAL	NORMAL	NORMAL	NORMAL	NORMAL	NORMAL	NORMAL	NORMAL	NORMAL	NORMAL
SUBMATRIX	SS	SS	SS	SS	SS	SS	SS	SS	SS	SS	SS
TOP DEPTH	1	1	1	1	1	1	1	1	1	1	0
BOTTOM DEPTH	2	2	2	2	2	2	2	2	2	2	2
DIOXINS/FURANS (NG/KG)											
1,2,3,4,6,7,8,9-OCDD											
1,2,3,4,6,7,8,9-OCDF											
1,2,3,4,6,7,8-HPCDD											
1,2,3,4,6,7,8-HPCDF											
1,2,3,4,7,8,9-HPCDF											
1,2,3,4,7,8-HXCDD											
1,2,3,4,7,8-HXCDF											
1,2,3,6,7,8-HXCDD											
1,2,3,6,7,8-HXCDF											
1,2,3,7,8,9-HXCDD											
1,2,3,7,8,9-HXCDF											
1,2,3,7,8-PECDD											
1,2,3,7,8-PECDF											
2,3,4,6,7,8-HXCDF											
2,3,4,7,8-PECDF											
2,3,7,8-TCDD											
2,3,7,8-TCDF											
TEQ BIRD											
TEQ BIRD HALFND											
TEQ MAMMAL											
TEQ MAMMAL HALFND											
TEQ WHO-2007											
TEQ WHO-2007 - HALFND											
TOTAL HPCDD											
TOTAL HPCDF											
TOTAL HXCDD											
TOTAL HXCDF											
TOTAL PECDD											
TOTAL PECDF											
TOTAL TCDD											
TOTAL TCDF											
EXPLOSIVES (MG/KG)											
1,3,5-TRINITROBENZENE											
1,3-DINITROBENZENE											
2,4,6-TRINITROTOLUENE											
2,4-DINITROTOLUENE											
2,6-DINITROTOLUENE											
2-AMINO-4,6-DINITROTOLUENE											
2-NITROTOLUENE											
3-NITROTOLUENE											
4-AMINO-2,6-DINITROTOLUENE											
4-NITROTOLUENE											
HMX											
NITROBENZENE											
PICRAMIC ACID											
PICRIC ACID											
RDX											
TETRYL											

TABLE A-1

SURFACE SOIL SAMPLE DATA
SWMU 16
NSA CRANE
CRANE, INDIANA

LOCATION	16SB072	16SB073	16SB074	16SB074	16SB075	16SB076	16SB077	16SB078	16SB098	16SB099	16SB126
SAMPLE ID	16SS0720102	16SS0730102	16SS0740102	16SS0740102-D	16SS0750102	16SS0760102	16SS0770102	16SS0780102	16SS0980102	16SS0990102	16SS1260002
SAMPLE DATE	20040812	20040812	20040817	20040817	20040812	20040812	20040812	20040812	20040816	20040816	20110824
ROUND	03	03	03	03	03	03	03	03	03	03	
EVENT											
SAMPLE CODE	NORMAL	NORMAL	NORMAL	DUP	NORMAL	NORMAL	NORMAL	NORMAL	NORMAL	NORMAL	NORMAL
MATRIX	SO	SO	SO	SO	SO	SO	SO	SO	SO	SO	SO
SAMPLE TYPE	NORMAL	NORMAL	NORMAL	NORMAL	NORMAL	NORMAL	NORMAL	NORMAL	NORMAL	NORMAL	NORMAL
SUBMATRIX	SS	SS	SS	SS	SS	SS	SS	SS	SS	SS	SS
TOP DEPTH	1	1	1	1	1	1	1	1	1	1	0
BOTTOM DEPTH	2	2	2	2	2	2	2	2	2	2	2
HERBICIDES (UG/KG)											
HEXACHLOROPHENE											
PENTACHLOROPHENOL											
METALS (MG/KG)											
ALUMINUM											
ANTIMONY											
ARSENIC											
BARIUM											
BERYLLIUM											
CADMIUM											
CALCIUM											
CHROMIUM											
COBALT											
COPPER											
IRON											
LEAD											
LITHIUM											
MAGNESIUM											
MANGANESE											
MERCURY											
NICKEL											
POTASSIUM											
SELENIUM											
SILVER											
SODIUM											
STRONTIUM											
THALLIUM											
TIN											
TITANIUM											
VANADIUM											
ZINC											
METALS (UG/KG)											
LEAD											
MISCELLANEOUS PARAMETERS (%)											
PERCENT MOISTURE											11
MISCELLANEOUS PARAMETERS (MEQ/100)											
CATION EXCHANGE CAPACITY											
MISCELLANEOUS PARAMETERS (MG/KG)											
TOTAL ORGANIC CARBON											
MISCELLANEOUS PARAMETERS (S.U.)											
PH											
PESTICIDES/PCBS (UG/KG)											
AROCLOR-1016											
AROCLOR-1221											
AROCLOR-1232											
AROCLOR-1242											
AROCLOR-1248											
AROCLOR-1254											
AROCLOR-1260											

TABLE A-1

SURFACE SOIL SAMPLE DATA
SWMU 16
NSA CRANE
CRANE, INDIANA

LOCATION	16SB072	16SB073	16SB074	16SB074	16SB075	16SB076	16SB077	16SB078	16SB098	16SB099	16SB126
SAMPLE ID	16SS0720102	16SS0730102	16SS0740102	16SS0740102-D	16SS0750102	16SS0760102	16SS0770102	16SS0780102	16SS0980102	16SS0990102	16SS1260002
SAMPLE DATE	20040812	20040812	20040817	20040817	20040812	20040812	20040812	20040812	20040816	20040816	20110824
ROUND	03	03	03	03	03	03	03	03	03	03	
EVENT											
SAMPLE CODE	NORMAL	NORMAL	NORMAL	DUP	NORMAL	NORMAL	NORMAL	NORMAL	NORMAL	NORMAL	NORMAL
MATRIX	SO	SO	SO	SO	SO	SO	SO	SO	SO	SO	SO
SAMPLE TYPE	NORMAL	NORMAL	NORMAL	NORMAL	NORMAL	NORMAL	NORMAL	NORMAL	NORMAL	NORMAL	NORMAL
SUBMATRIX	SS	SS	SS	SS	SS	SS	SS	SS	SS	SS	SS
TOP DEPTH	1	1	1	1	1	1	1	1	1	1	0
BOTTOM DEPTH	2	2	2	2	2	2	2	2	2	2	2
PETROLEUM HYDROCARBONS (UG/KG)											
DRO (C08-C28)											
TPH (C06-C12)											
SEMIVOLATILES (UG/KG)											
1,2,4,5-TETRACHLOROBENZENE											
1,2,4-TRICHLOROBENZENE											
1,2-DICHLOROBENZENE											
1,3-DICHLOROBENZENE											
1,4-DICHLOROBENZENE											
1,4-NAPHTHOQUINONE											
1,4-PHENYLENEDIAMINE											
1-NAPHTHYLAMINE											
2,2'-OXYBIS(1-CHLOROPROPANE)											
2,3,4,6-TETRACHLOROPHENOL											
2,4,5-TRICHLOROPHENOL											
2,4,6-TRICHLOROPHENOL											
2,4-DICHLOROPHENOL											
2,4-DIMETHYLPHENOL											
2,4-DINITROPHENOL											
2,6-DICHLOROPHENOL											
2-ACETYLAMINOFLUORENE											
2-CHLORONAPHTHALENE											
2-CHLOROPHENOL											
2-METHYLNAPHTHALENE											
2-METHYLPHENOL											
2-NAPHTHYLAMINE											
2-NITROANILINE											
2-NITROPHENOL											
2-PICOLINE											
3&4-METHYLPHENOL											
3,3'-DICHLOROBENZIDINE											
3,3'-DIMETHYLBENZIDINE											
3-METHYLCHOLANTHRENE											
3-NITROANILINE											
4,6-DINITRO-2-METHYLPHENOL											
4-AMINOBIPHENYL											
4-BROMOPHENYL PHENYL ETHER											
4-CHLORO-3-METHYLPHENOL											
4-CHLOROANILINE											
4-CHLOROPHENYL PHENYL ETHER											
4-NITROANILINE											
4-NITROPHENOL											
4-NITROQUINOLINE-1-OXIDE											
5-NITRO-O-TOLUIDINE											
7,12-DIMETHYLBENZ(A)ANTHRACENE											
A,A-DIMETHYLPHENETHYLAMINE											
ACENAPHTHENE											
ACENAPHTHYLENE											
ACETOPHENONE											

TABLE A-1

SURFACE SOIL SAMPLE DATA
SWMU 16
NSA CRANE
CRANE, INDIANA

LOCATION	16SB072	16SB073	16SB074	16SB074	16SB075	16SB076	16SB077	16SB078	16SB098	16SB099	16SB126
SAMPLE ID	16SS0720102	16SS0730102	16SS0740102	16SS0740102-D	16SS0750102	16SS0760102	16SS0770102	16SS0780102	16SS0980102	16SS0990102	16SS1260002
SAMPLE DATE	20040812	20040812	20040817	20040817	20040812	20040812	20040812	20040812	20040816	20040816	20110824
ROUND	03	03	03	03	03	03	03	03	03	03	
EVENT											
SAMPLE CODE	NORMAL	NORMAL	NORMAL	DUP	NORMAL	NORMAL	NORMAL	NORMAL	NORMAL	NORMAL	NORMAL
MATRIX	SO	SO	SO	SO	SO	SO	SO	SO	SO	SO	SO
SAMPLE TYPE	NORMAL	NORMAL	NORMAL	NORMAL	NORMAL	NORMAL	NORMAL	NORMAL	NORMAL	NORMAL	NORMAL
SUBMATRIX	SS	SS	SS	SS	SS	SS	SS	SS	SS	SS	SS
TOP DEPTH	1	1	1	1	1	1	1	1	1	1	0
BOTTOM DEPTH	2	2	2	2	2	2	2	2	2	2	2
ANILINE											
ANTHRACENE											
ARAMITE											
BENZO(A)ANTHRACENE											
BENZO(A)PYRENE											
BENZO(B)FLUORANTHENE											
BENZO(G,H,I)PERYLENE											
BENZO(K)FLUORANTHENE											
BENZYL ALCOHOL											
BIS(2-CHLOROETHOXY)METHANE											
BIS(2-CHLOROETHYL)ETHER											
BIS(2-ETHYLHEXYL)PHTHALATE											
BUTYL BENZYL PHTHALATE											
CHLOROBENZILATE											
CHRYSENE											
DIALLATE											
DIBENZO(A,H)ANTHRACENE											
DIBENZOFURAN											
DIETHYL PHTHALATE											
DIMETHYL PHTHALATE											
DI-N-BUTYL PHTHALATE											
DI-N-OCTYL PHTHALATE											
DIPHENYLAMINE											
ETHYL METHANE SULFONATE											
FLUORANTHENE											
FLUORENE											
HEXACHLOROBENZENE											
HEXACHLOROBUTADIENE											
HEXACHLOROCYCLOPENTADIENE											
HEXACHLOROETHANE											
HEXACHLOROPROPENE											
INDENO(1,2,3-CD)PYRENE											
ISODRIN											
ISOPHORONE											
ISOSAFROLE											
KEPONE											
METHAPYRILENE											
METHYL METHANE SULFONATE											
NAPHTHALENE											
N-NITROSODIETHYLAMINE											
N-NITROSODIMETHYLAMINE											
N-NITROSO-DI-N-BUTYLAMINE											
N-NITROSO-DI-N-PROPYLAMINE											
N-NITROSOMETHYLETHYLAMINE											
N-NITROSOMORPHOLINE											
N-NITROSOPIPERIDINE											
N-NITROSOPYRROLIDINE											
O,O,O-TRIETHYL PHOSPHOROTHIOATE											
O-TOLUIDINE											

TABLE A-1

SURFACE SOIL SAMPLE DATA
SWMU 16
NSA CRANE
CRANE, INDIANA

LOCATION	16SB072	16SB073	16SB074	16SB074	16SB075	16SB076	16SB077	16SB078	16SB098	16SB099	16SB126
SAMPLE ID	16SS0720102	16SS0730102	16SS0740102	16SS0740102-D	16SS0750102	16SS0760102	16SS0770102	16SS0780102	16SS0980102	16SS0990102	16SS1260002
SAMPLE DATE	20040812	20040812	20040817	20040817	20040812	20040812	20040812	20040812	20040816	20040816	20110824
ROUND	03	03	03	03	03	03	03	03	03	03	
EVENT											
SAMPLE CODE	NORMAL	NORMAL	NORMAL	DUP	NORMAL	NORMAL	NORMAL	NORMAL	NORMAL	NORMAL	NORMAL
MATRIX	SO	SO	SO	SO	SO	SO	SO	SO	SO	SO	SO
SAMPLE TYPE	NORMAL	NORMAL	NORMAL	NORMAL	NORMAL	NORMAL	NORMAL	NORMAL	NORMAL	NORMAL	NORMAL
SUBMATRIX	SS	SS	SS	SS	SS	SS	SS	SS	SS	SS	SS
TOP DEPTH	1	1	1	1	1	1	1	1	1	1	0
BOTTOM DEPTH	2	2	2	2	2	2	2	2	2	2	2
PENTACHLOROBENZENE											
PENTACHLOROETHANE											
PENTACHLORONITROBENZENE											
PHENACETIN											
PHENANTHRENE											
PHENOL											
PRONAMIDE											
PYRENE											
PYRIDINE											
SAFROLE											
SOLVENT YELLOW 2											
VOLATILES (UG/KG)											
1,1,1,2-TETRACHLOROETHANE	0.933 U	1 U	0.938 U	1.02 U	0.967 U	0.953 U	0.893 U	1.02 U	1.24 U	0.98 U	
1,1,1-TRICHLOROETHANE	0.933 U	1 U	0.938 U	1.02 U	0.967 U	0.953 U	0.893 U	1.02 U	1.24 U	0.98 U	
1,1,2,2-TETRACHLOROETHANE	0.933 U	1 U	0.938 U	1.02 U	0.967 U	0.953 U	0.893 U	1.02 U	1.24 U	0.98 U	
1,1,2-TRICHLOROETHANE	0.933 U	1 U	0.938 U	1.02 U	0.967 U	0.953 U	0.893 U	1.02 U	1.24 U	0.98 U	
1,1,2-TRICHLOROTRIFLUOROETHANE											
1,1-DICHLOROETHANE	0.933 U	1 U	0.938 U	1.02 U	0.967 U	0.953 U	0.893 U	1.02 U	1.24 U	0.98 U	0.51 U
1,1-DICHLOROETHENE	0.933 U	1 U	0.938 U	1.02 U	0.967 U	0.953 U	0.893 U	1.02 U	1.24 U	0.98 U	
1,2,3-TRICHLOROBENZENE											
1,2,3-TRICHLOROPROPANE	0.933 U	1 U	0.938 U	1.02 U	0.967 U	0.953 U	0.893 U	1.02 U	1.24 U	0.98 U	
1,2,4-TRICHLOROBENZENE											
1,2-DIBROMO-3-CHLOROPROPANE	0.933 U	1 U	0.938 U	1.02 U	0.967 U	0.953 U	0.893 U	1.02 U	1.24 U	0.98 U	
1,2-DIBROMOETHANE	0.933 U	1 UJ	0.938 U	1.02 U	0.967 UJ	0.953 U	0.893 UJ	1.02 U	1.24 U	0.98 U	
1,2-DICHLOROBENZENE											
1,2-DICHLOROETHANE	0.933 U	1 U	0.938 U	1.02 U	0.967 U	0.953 U	0.893 U	1.02 U	1.24 U	0.98 U	
1,2-DICHLOROPROPANE	0.933 U	1 U	0.938 U	1.02 U	0.967 U	0.953 U	0.893 U	1.02 U	1.24 U	0.98 U	
1,3-DICHLOROBENZENE											
1,4-DICHLOROBENZENE											
1,4-DIOXANE	91 U	101 U	96.1 U	114 U	96.7 U	96.4 U	95.1 U	94.5 U	106 U	96.8 U	
2-BUTANONE	3 J	5 J	0.938 U	1.02 U	0.967 U	0.953 U	0.893 U	1.02 U	1.24 U	0.98 U	
2-HEXANONE	0.933 U	1 U	0.938 U	1.02 U	0.967 U	0.953 U	0.893 U	1.02 U	1.24 U	0.98 U	
3-CHLOROPROPENE	0.933 U	1 U	0.938 U	1.02 U	0.967 U	0.953 U	0.893 U	1.02 U	1.24 U	0.98 U	
4-METHYL-2-PENTANONE	0.933 U	1 J	0.938 U	1.02 U	0.967 U	0.953 U	0.893 U	1.02 U	1.24 U	0.98 U	
ACETONE	28 J	51 BJ	3 BU	2 BU	5 BU	2 J	3 U	1.02 U	1.24 J	0.98 U	
ACETONITRILE	36.4 UJ	40.5 U	38.5 U	45.7 U	38.7 U	38.6 U	38 U	37.8 U	42.4 U	38.7 U	
ACROLEIN	0.933 UR	1 UR	0.938 UR	1.02 UR	0.967 UR	0.953 UR	0.893 UR	1.02 UR	1.24 UR	0.98 UR	
ACRYLONITRILE	0.933 U	1 U	0.938 U	1.02 U	0.967 U	0.953 U	0.893 U	1.02 U	1.24 U	0.98 U	
BENZENE	0.933 U	1 U	0.938 U	1.02 U	0.967 U	0.953 U	0.893 U	1.02 U	1.24 U	0.98 U	
BROMODICHLOROMETHANE	0.933 U	1 U	0.938 U	1.02 U	0.967 U	0.953 U	0.893 U	1.02 U	1.24 U	0.98 U	
BROMOFORM	0.933 U	1 U	0.938 U	1.02 U	0.967 U	0.953 U	0.893 U	1.02 U	1.24 U	0.98 U	
BROMOMETHANE	0.933 UJ	1 UJ	0.938 U	1.02 U	0.967 UJ	0.953 U	0.893 UJ	1.02 U	1.24 U	0.98 U	
CARBON DISULFIDE	3	2 J	0.938 U	1.02 U	0.967 U	0.953 U	0.893 U	1.02 U	1.24 U	0.98 U	
CARBON TETRACHLORIDE	0.933 U	1 U	0.938 U	1.02 U	0.967 U	0.953 U	0.893 U	1.02 U	1.24 U	0.98 U	
CHLOROBENZENE	0.933 U	1 U	0.938 U	1.02 U	0.967 U	0.953 U	0.893 U	1.02 U	1.24 U	0.98 U	
CHLORODIBROMOMETHANE	0.933 U	1 U	0.938 U	1.02 U	0.967 U	0.953 U	0.893 U	1.02 U	1.24 U	0.98 U	
CHLOROETHANE	0.933 U	1 U	0.938 U	1.02 U	0.967 U	0.953 U	0.893 U	1.02 U	1.24 U	0.98 U	
CHLOROFORM	0.933 U	1 U	0.938 U	1.02 U	0.967 U	0.953 U	0.893 U	1.02 U	1.24 U	1 J	
CHLOROMETHANE	0.933 U	1 U	0.938 U	1.02 U	0.967 U	0.953 U	0.893 U	1.02 U	1.24 U	0.98 U	

TABLE A-1

SURFACE SOIL SAMPLE DATA
SWMU 16
NSA CRANE
CRANE, INDIANA

LOCATION	**16SB072**	**16SB073**	**16SB074**	**16SB074**	**16SB075**	**16SB076**	**16SB077**	**16SB078**	**16SB098**	**16SB099**	**16SB126**
SAMPLE ID	**16SS0720102**	**16SS0730102**	**16SS0740102**	**16SS0740102-D**	**16SS0750102**	**16SS0760102**	**16SS0770102**	**16SS0780102**	**16SS0980102**	**16SS0990102**	**16SS1260002**
SAMPLE DATE	**20040812**	**20040812**	**20040817**	**20040817**	**20040812**	**20040812**	**20040812**	**20040812**	**20040816**	**20040816**	**20110824**
ROUND	**03**	**03**	**03**	**03**	**03**	**03**	**03**	**03**	**03**	**03**	
EVENT											
SAMPLE CODE	**NORMAL**	**NORMAL**	**NORMAL**	**DUP**	**NORMAL**	**NORMAL**	**NORMAL**	**NORMAL**	**NORMAL**	**NORMAL**	**NORMAL**
MATRIX	**SO**	**SO**	**SO**	**SO**	**SO**	**SO**	**SO**	**SO**	**SO**	**SO**	**SO**
SAMPLE TYPE	**NORMAL**	**NORMAL**	**NORMAL**	**NORMAL**	**NORMAL**	**NORMAL**	**NORMAL**	**NORMAL**	**NORMAL**	**NORMAL**	**NORMAL**
SUBMATRIX	**SS**	**SS**	**SS**	**SS**	**SS**	**SS**	**SS**	**SS**	**SS**	**SS**	**SS**
TOP DEPTH	**1**	**1**	**1**	**1**	**1**	**1**	**1**	**1**	**1**	**1**	**0**
BOTTOM DEPTH	**2**	**2**	**2**	**2**	**2**	**2**	**2**	**2**	**2**	**2**	**2**
CHLOROPRENE	0.933 U	1 U	0.938 U	1.02 U	0.967 U	0.953 U	0.893 U	1.02 U	1.24 U	0.98 U	
CIS-1,2-DICHLOROETHENE	13	3 J	0.938 U	1.02 U	0.967 U	0.953 U	0.893 U	1.02 U	1.24 U	0.98 U	0.51 U
CIS-1,3-DICHLOROPROPENE	0.933 U	1 U	0.938 U	1.02 U	0.967 U	0.953 U	0.893 U	1.02 U	1.24 U	0.98 U	
CYCLOHEXANE											
DIBROMOMETHANE	0.933 U	1 U	0.938 U	1.02 U	0.967 U	0.953 U	0.893 U	1.02 U	1.24 U	0.98 U	
DICHLORODIFLUOROMETHANE	0.933 UJ	1 U	1 J	2 J	2 J	13	0.893 UJ	1.02 U	1.24 U	5 J	
ETHYL METHACRYLATE	0.933 U	1 U	0.938 U	1.02 U	0.967 U	0.953 U	0.893 U	1.02 U	1.24 U	0.98 U	
ETHYLBENZENE	0.933 U	1 U	0.938 U	1.02 U	0.967 U	0.953 U	0.893 U	1.02 U	1.24 U	0.98 U	
ISOBUTANOL	36.4 U	40.5 U	38.5 U	45.7 U	38.7 U	38.6 U	38 U	37.8 U	42.4 U	38.7 U	
ISOPROPYLBENZENE											
METHACRYLONITRILE	0.933 U	1 U	0.938 U	1.02 U	0.967 U	0.953 U	0.893 U	1.02 U	1.24 U	0.98 U	
METHYL ACETATE											
METHYL IODIDE	0.933 U	1 U	0.938 UJ	1.02 UJ	0.967 U	0.953 U	0.893 UR	1.02 U	1.24 U	0.98 U	
METHYL METHACRYLATE	0.933 U	1 U	0.938 U	1.02 U	0.967 U	0.953 U	0.893 U	1.02 U	1.24 U	0.98 U	
METHYL TERT-BUTYL ETHER											
METHYLENE CHLORIDE	2 U	2 U	0.938 UJ	1.02 UJ	3 U	0.953 UJ	0.893 UJ	1.02 UJ	1.24 UJ	0.98 UJ	
PROPIONITRILE	36.4 U	40.5 U	38.5 U	45.7 U	38.7 U	38.6 U	38 U	37.8 U	42.4 U	38.7 U	
STYRENE	0.933 U	1 U	0.938 U	1.02 U	0.967 U	0.953 U	0.893 U	1.02 U	1.24 U	0.98 U	
TETRACHLOROETHENE	0.933 U	1 U	0.938 U	1.02 U	0.967 U	0.953 U	0.893 U	1.02 U	1.24 U	0.98 U	
TOLUENE	0.933 U	1 J	0.938 U	1.02 U	0.967 U	0.953 U	0.893 U	1.02 U	1.24 U	0.98 U	
TOTAL XYLENES	0.933 U	3	0.938 U	1.02 U	0.967 U	0.953 U	0.893 U	1.02 U	1.24 U	0.98 U	
TRANS-1,2-DICHLOROETHENE	0.933 U	1 U	0.938 U	1.02 U	0.967 U	0.953 U	0.893 U	1.02 U	1.24 U	0.98 U	0.51 U
TRANS-1,3-DICHLOROPROPENE	0.933 U	1 U	0.938 U	1.02 U	0.967 U	0.953 U	0.893 U	1.02 U	1.24 U	0.98 U	
TRANS-1,4-DICHLORO-2-BUTENE	0.933 U	1 U	0.938 U	1.02 U	0.967 U	0.953 U	0.893 U	1.02 U	1.24 U	0.98 U	
TRICHLOROETHENE	2 J	1 U	0.938 U	1.02 U	0.967 U	0.953 U	0.893 U	1.02 U	170	103 J	0.51 U
TRICHLOROFLUOROMETHANE	0.933 U	1 U	0.938 U	1.02 U	0.967 U	1 J	0.893 U	1.02 U	1.24 U	0.98 U	
VINYL ACETATE	0.933 U	1 U	0.938 U	1.02 U	0.967 U	0.953 U	0.893 U	1.02 U	1.24 U	0.98 U	
VINYL CHLORIDE	0.933 U	1 U	0.938 U	1.02 U	0.967 U	0.953 U	0.893 U	1.02 U	1.24 U	0.98 U	0.51 U

TABLE A-1

SURFACE SOIL SAMPLE DATA
SWMU 16
NSA CRANE
CRANE, INDIANA

LOCATION	16SB127	16SB128	16SB128	16SB129	16SB130	16SB131	16SB132	16SB133	16SB134	16SB135	16SB136
SAMPLE ID	16SS1270002	16SS1280002	16SS1280002-D	16SS1290002	16SS1300002	16SS1310002	16SS1320002	16SS1330002	16SS1340002	16SB1350002	16SS1360002
SAMPLE DATE	20110824	20110824	20110824	20110824	20110824	20110824	20110824	20110824	20110824	20110824	20110824
ROUND											
EVENT											
SAMPLE CODE	NORMAL	ORIG	DUP	NORMAL	NORMAL	NORMAL	NORMAL	NORMAL	NORMAL	NORMAL	NORMAL
MATRIX	SO	SO	SO	SO	SO	SO	SO	SO	SO	SO	SO
SAMPLE TYPE	NORMAL	NORMAL	NORMAL	NORMAL	NORMAL	NORMAL	NORMAL	NORMAL	NORMAL	NORMAL	NORMAL
SUBMATRIX	SS	SS	SS	SS	SS	SS	SS	SS	SS	SS	SS
TOP DEPTH	0	0	0	0	0	0	0	0	0	0	0
BOTTOM DEPTH	2	2	2	2	2	2	2	2	2	2	2
DIOXINS/FURANS (NG/KG)											
1,2,3,4,6,7,8,9-OCDD											
1,2,3,4,6,7,8,9-OCDF											
1,2,3,4,6,7,8-HPCDD											
1,2,3,4,6,7,8-HPCDF											
1,2,3,4,7,8,9-HPCDF											
1,2,3,4,7,8-HXCDD											
1,2,3,4,7,8-HXCDF											
1,2,3,6,7,8-HXCDD											
1,2,3,6,7,8-HXCDF											
1,2,3,7,8,9-HXCDD											
1,2,3,7,8,9-HXCDF											
1,2,3,7,8-PECDD											
1,2,3,7,8-PECDF											
2,3,4,6,7,8-HXCDF											
2,3,4,7,8-PECDF											
2,3,7,8-TCDD											
2,3,7,8-TCDF											
TEQ BIRD											
TEQ BIRD HALFND											
TEQ MAMMAL											
TEQ MAMMAL HALFND											
TEQ WHO-2007											
TEQ WHO-2007 - HALFND											
TOTAL HPCDD											
TOTAL HPCDF											
TOTAL HXCDD											
TOTAL HXCDF											
TOTAL PECDD											
TOTAL PECDF											
TOTAL TCDD											
TOTAL TCDF											
EXPLOSIVES (MG/KG)											
1,3,5-TRINITROBENZENE											
1,3-DINITROBENZENE											
2,4,6-TRINITROTOLUENE											
2,4-DINITROTOLUENE											
2,6-DINITROTOLUENE											
2-AMINO-4,6-DINITROTOLUENE											
2-NITROTOLUENE											
3-NITROTOLUENE											
4-AMINO-2,6-DINITROTOLUENE											
4-NITROTOLUENE											
HMX											
NITROBENZENE											
PICRAMIC ACID											
PICRIC ACID											
RDX											
TETRYL											

TABLE A-1

SURFACE SOIL SAMPLE DATA
SWMU 16
NSA CRANE
CRANE, INDIANA

LOCATION	16SB127	16SB128	16SB128	16SB129	16SB130	16SB131	16SB132	16SB133	16SB134	16SB135	16SB136
SAMPLE ID	16SS1270002	16SS1280002	16SS1280002-D	16SS1290002	16SS1300002	16SS1310002	16SS1320002	16SS1330002	16SS1340002	16SB1350002	16SS1360002
SAMPLE DATE	20110824	20110824	20110824	20110824	20110824	20110824	20110824	20110824	20110824	20110824	20110824
ROUND											
EVENT											
SAMPLE CODE	NORMAL	ORIG	DUP	NORMAL	NORMAL	NORMAL	NORMAL	NORMAL	NORMAL	NORMAL	NORMAL
MATRIX	SO	SO	SO	SO	SO	SO	SO	SO	SO	SO	SO
SAMPLE TYPE	NORMAL	NORMAL	NORMAL	NORMAL	NORMAL	NORMAL	NORMAL	NORMAL	NORMAL	NORMAL	NORMAL
SUBMATRIX	SS	SS	SS	SS	SS	SS	SS	SS	SS	SS	SS
TOP DEPTH	0	0	0	0	0	0	0	0	0	0	0
BOTTOM DEPTH	2	2	2	2	2	2	2	2	2	2	2
HERBICIDES (UG/KG)											
HEXACHLOROPHENE											
PENTACHLOROPHENOL											
METALS (MG/KG)											
ALUMINUM											
ANTIMONY											
ARSENIC											
BARIUM											
BERYLLIUM											
CADMIUM											
CALCIUM											
CHROMIUM											
COBALT											
COPPER											
IRON											
LEAD											
LITHIUM											
MAGNESIUM											
MANGANESE											
MERCURY											
NICKEL											
POTASSIUM											
SELENIUM											
SILVER											
SODIUM											
STRONTIUM											
THALLIUM											
TIN											
TITANIUM											
VANADIUM											
ZINC											
METALS (UG/KG)											
LEAD											
MISCELLANEOUS PARAMETERS (%)											
PERCENT MOISTURE	11	16		11	13	17					
MISCELLANEOUS PARAMETERS (MEQ/100)											
CATION EXCHANGE CAPACITY											
MISCELLANEOUS PARAMETERS (MG/KG)											
TOTAL ORGANIC CARBON											
MISCELLANEOUS PARAMETERS (S.U.)											
PH											
PESTICIDES/PCBS (UG/KG)											
AROCLOR-1016											
AROCLOR-1221											
AROCLOR-1232											
AROCLOR-1242											
AROCLOR-1248											
AROCLOR-1254											
AROCLOR-1260											

TABLE A-1

SURFACE SOIL SAMPLE DATA
SWMU 16
NSA CRANE
CRANE, INDIANA

LOCATION	16SB127	16SB128	16SB128	16SB129	16SB130	16SB131	16SB132	16SB133	16SB134	16SB135	16SB136
SAMPLE ID	16SS1270002	16SS1280002	16SS1280002-D	16SS1290002	16SS1300002	16SS1310002	16SS1320002	16SS1330002	16SS1340002	16SB1350002	16SS1360002
SAMPLE DATE	20110824	20110824	20110824	20110824	20110824	20110824	20110824	20110824	20110824	20110824	20110824
ROUND											
EVENT											
SAMPLE CODE	NORMAL	ORIG	DUP	NORMAL	NORMAL	NORMAL	NORMAL	NORMAL	NORMAL	NORMAL	NORMAL
MATRIX	SO	SO	SO	SO	SO	SO	SO	SO	SO	SO	SO
SAMPLE TYPE	NORMAL	NORMAL	NORMAL	NORMAL	NORMAL	NORMAL	NORMAL	NORMAL	NORMAL	NORMAL	NORMAL
SUBMATRIX	SS	SS	SS	SS	SS	SS	SS	SS	SS	SS	SS
TOP DEPTH	0	0	0	0	0	0	0	0	0	0	0
BOTTOM DEPTH	2	2	2	2	2	2	2	2	2	2	2
PETROLEUM HYDROCARBONS (UG/KG)											
DRO (C08-C28)											
TPH (C06-C12)											
SEMIVOLATILES (UG/KG)											
1,2,4,5-TETRACHLOROBENZENE											
1,2,4-TRICHLOROBENZENE											
1,2-DICHLOROBENZENE											
1,3-DICHLOROBENZENE											
1,4-DICHLOROBENZENE											
1,4-NAPHTHOQUINONE											
1,4-PHENYLENEDIAMINE											
1-NAPHTHYLAMINE											
2,2'-OXYBIS(1-CHLOROPROPANE)											
2,3,4,6-TETRACHLOROPHENOL											
2,4,5-TRICHLOROPHENOL											
2,4,6-TRICHLOROPHENOL											
2,4-DICHLOROPHENOL											
2,4-DIMETHYLPHENOL											
2,4-DINITROPHENOL											
2,6-DICHLOROPHENOL											
2-ACETYLAMINOFLUORENE											
2-CHLORONAPHTHALENE											
2-CHLOROPHENOL											
2-METHYLNAPHTHALENE											
2-METHYLPHENOL											
2-NAPHTHYLAMINE											
2-NITROANILINE											
2-NITROPHENOL											
2-PICOLINE											
3&4-METHYLPHENOL											
3,3'-DICHLOROBENZIDINE											
3,3'-DIMETHYLBENZIDINE											
3-METHYLCHOLANTHRENE											
3-NITROANILINE											
4,6-DINITRO-2-METHYLPHENOL											
4-AMINOBIPHENYL											
4-BROMOPHENYL PHENYL ETHER											
4-CHLORO-3-METHYLPHENOL											
4-CHLOROANILINE											
4-CHLOROPHENYL PHENYL ETHER											
4-NITROANILINE											
4-NITROPHENOL											
4-NITROQUINOLINE-1-OXIDE											
5-NITRO-O-TOLUIDINE											
7,12-DIMETHYLBENZ(A)ANTHRACENE											
A,A-DIMETHYLPHENETHYLAMINE											
ACENAPHTHENE											
ACENAPHTHYLENE											
ACETOPHENONE											

TABLE A-1

SURFACE SOIL SAMPLE DATA
SWMU 16
NSA CRANE
CRANE, INDIANA

LOCATION	16SB127	16SB128	16SB128	16SB129	16SB130	16SB131	16SB132	16SB133	16SB134	16SB135	16SB136
SAMPLE ID	16SS1270002	16SS1280002	16SS1280002-D	16SS1290002	16SS1300002	16SS1310002	16SS1320002	16SS1330002	16SS1340002	16SB1350002	16SS1360002
SAMPLE DATE	20110824	20110824	20110824	20110824	20110824	20110824	20110824	20110824	20110824	20110824	20110824
ROUND											
EVENT											
SAMPLE CODE	NORMAL	ORIG	DUP	NORMAL	NORMAL	NORMAL	NORMAL	NORMAL	NORMAL	NORMAL	NORMAL
MATRIX	SO	SO	SO	SO	SO	SO	SO	SO	SO	SO	SO
SAMPLE TYPE	NORMAL	NORMAL	NORMAL	NORMAL	NORMAL	NORMAL	NORMAL	NORMAL	NORMAL	NORMAL	NORMAL
SUBMATRIX	SS	SS	SS	SS	SS	SS	SS	SS	SS	SS	SS
TOP DEPTH	0	0	0	0	0	0	0	0	0	0	0
BOTTOM DEPTH	2	2	2	2	2	2	2	2	2	2	2
ANILINE											
ANTHRACENE											
ARAMITE											
BENZO(A)ANTHRACENE											
BENZO(A)PYRENE											
BENZO(B)FLUORANTHENE											
BENZO(G,H,I)PERYLENE											
BENZO(K)FLUORANTHENE											
BENZYL ALCOHOL											
BIS(2-CHLOROETHOXY)METHANE											
BIS(2-CHLOROETHYL)ETHER											
BIS(2-ETHYLHEXYL)PHTHALATE											
BUTYL BENZYL PHTHALATE											
CHLOROBENZILATE											
CHRYSENE											
DIALLATE											
DIBENZO(A,H)ANTHRACENE											
DIBENZOFURAN											
DIETHYL PHTHALATE											
DIMETHYL PHTHALATE											
DI-N-BUTYL PHTHALATE											
DI-N-OCTYL PHTHALATE											
DIPHENYLAMINE											
ETHYL METHANE SULFONATE											
FLUORANTHENE											
FLUORENE											
HEXACHLOROBENZENE											
HEXACHLOROBUTADIENE											
HEXACHLOROCYCLOPENTADIENE											
HEXACHLOROETHANE											
HEXACHLOROPROPENE											
INDENO(1,2,3-CD)PYRENE											
ISODRIN											
ISOPHORONE											
ISOSAFROLE											
KEPONE											
METHAPYRILENE											
METHYL METHANE SULFONATE											
NAPHTHALENE											
N-NITROSODIETHYLAMINE											
N-NITROSODIMETHYLAMINE											
N-NITROSO-DI-N-BUTYLAMINE											
N-NITROSO-DI-N-PROPYLAMINE											
N-NITROSOMETHYLETHYLAMINE											
N-NITROSOMORPHOLINE											
N-NITROSOPIPERIDINE											
N-NITROSOPYRROLIDINE											
O,O,O-TRIETHYL PHOSPHOROTHIOATE											
O-TOLUIDINE											

TABLE A-1

SURFACE SOIL SAMPLE DATA
SWMU 16
NSA CRANE
CRANE, INDIANA

LOCATION	16SB127	16SB128	16SB128	16SB129	16SB130	16SB131	16SB132	16SB133	16SB134	16SB135	16SB136
SAMPLE ID	16SS1270002	16SS1280002	16SS1280002-D	16SS1290002	16SS1300002	16SS1310002	16SS1320002	16SS1330002	16SS1340002	16SB1350002	16SS1360002
SAMPLE DATE	20110824	20110824	20110824	20110824	20110824	20110824	20110824	20110824	20110824	20110824	20110824
ROUND											
EVENT											
SAMPLE CODE	NORMAL	ORIG	DUP	NORMAL	NORMAL	NORMAL	NORMAL	NORMAL	NORMAL	NORMAL	NORMAL
MATRIX	SO	SO	SO	SO	SO	SO	SO	SO	SO	SO	SO
SAMPLE TYPE	NORMAL	NORMAL	NORMAL	NORMAL	NORMAL	NORMAL	NORMAL	NORMAL	NORMAL	NORMAL	NORMAL
SUBMATRIX	SS	SS	SS	SS	SS	SS	SS	SS	SS	SS	SS
TOP DEPTH	0	0	0	0	0	0	0	0	0	0	0
BOTTOM DEPTH	2	2	2	2	2	2	2	2	2	2	2
PENTACHLOROBENZENE											
PENTACHLOROETHANE											
PENTACHLORONITROBENZENE											
PHENACETIN											
PHENANTHRENE											
PHENOL											
PRONAMIDE											
PYRENE											
PYRIDINE											
SAFROLE											
SOLVENT YELLOW 2											
VOLATILES (UG/KG)											
1,1,1,2-TETRACHLOROETHANE											
1,1,1-TRICHLOROETHANE											
1,1,2,2-TETRACHLOROETHANE											
1,1,2-TRICHLOROETHANE			0.5355 U				0.45 U	0.507 U	0.449 U	0.491 U	0.511 U
1,1,2-TRICHLOROTRIFLUOROETHANE											
1,1-DICHLOROETHANE	0.51 U	0.52 U		0.52 U	0.67 U	0.72 U					
1,1-DICHLOROETHENE											
1,2,3-TRICHLOROBENZENE											
1,2,3-TRICHLOROPROPANE											
1,2,4-TRICHLOROBENZENE											
1,2-DIBROMO-3-CHLOROPROPANE											
1,2-DIBROMOETHANE											
1,2-DICHLOROBENZENE											
1,2-DICHLOROETHANE											
1,2-DICHLOROPROPANE											
1,3-DICHLOROBENZENE											
1,4-DICHLOROBENZENE											
1,4-DIOXANE											
2-BUTANONE											
2-HEXANONE											
3-CHLOROPROPENE											
4-METHYL-2-PENTANONE											
ACETONE											
ACETONITRILE											
ACROLEIN											
ACRYLONITRILE											
BENZENE											
BROMODICHLOROMETHANE											
BROMOFORM											
BROMOMETHANE											
CARBON DISULFIDE											
CARBON TETRACHLORIDE											
CHLOROBENZENE											
CHLORODIBROMOMETHANE											
CHLOROETHANE											
CHLOROFORM											
CHLOROMETHANE											

TABLE A-1

SURFACE SOIL SAMPLE DATA
SWMU 16
NSA CRANE
CRANE, INDIANA

LOCATION	16SB127	16SB128	16SB128	16SB129	16SB130	16SB131	16SB132	16SB133	16SB134	16SB135	16SB136
SAMPLE ID	16SS1270002	16SS1280002	16SS1280002-D	16SS1290002	16SS1300002	16SS1310002	16SS1320002	16SS1330002	16SS1340002	16SB1350002	16SS1360002
SAMPLE DATE	20110824	20110824	20110824	20110824	20110824	20110824	20110824	20110824	20110824	20110824	20110824
ROUND											
EVENT											
SAMPLE CODE	NORMAL	ORIG	DUP	NORMAL	NORMAL	NORMAL	NORMAL	NORMAL	NORMAL	NORMAL	NORMAL
MATRIX	SO	SO	SO	SO	SO	SO	SO	SO	SO	SO	SO
SAMPLE TYPE	NORMAL	NORMAL	NORMAL	NORMAL	NORMAL	NORMAL	NORMAL	NORMAL	NORMAL	NORMAL	NORMAL
SUBMATRIX	SS	SS	SS	SS	SS	SS	SS	SS	SS	SS	SS
TOP DEPTH	0	0	0	0	0	0	0	0	0	0	0
BOTTOM DEPTH	2	2	2	2	2	2	2	2	2	2	2
CHLOROPRENE											
CIS-1,2-DICHLOROETHENE	0.51 U	0.52 U	0.5355 U	0.52 U	0.67 U	0.72 U	0.45 U	0.507 U	0.449 U	0.491 U	0.511 U
CIS-1,3-DICHLOROPROPENE											
CYCLOHEXANE											
DIBROMOMETHANE											
DICHLORODIFLUOROMETHANE											
ETHYL METHACRYLATE											
ETHYLBENZENE											
ISOBUTANOL											
ISOPROPYLBENZENE											
METHACRYLONITRILE											
METHYL ACETATE											
METHYL IODIDE											
METHYL METHACRYLATE											
METHYL TERT-BUTYL ETHER											
METHYLENE CHLORIDE											
PROPIONITRILE											
STYRENE											
TETRACHLOROETHENE											
TOLUENE											
TOTAL XYLENES											
TRANS-1,2-DICHLOROETHENE	0.51 U	0.52 U	0.5355 U	0.52 U	0.67 U	0.72 U	0.45 U	0.507 U	0.449 U	0.491 U	0.511 U
TRANS-1,3-DICHLOROPROPENE											
TRANS-1,4-DICHLORO-2-BUTENE											
TRICHLOROETHENE	0.51 U	0.52 U	0.5893 U	0.52 U	0.67 U	0.72 U	0.495 U	0.557 U	0.494 U	3.21	0.681 J
TRICHLOROFLUOROMETHANE											
VINYL ACETATE											
VINYL CHLORIDE	0.51 U	0.52 U	0.5355 U	0.52 U	0.67 U	0.72 U	0.45 U	0.507 U	0.449 U	0.491 U	0.511 U

TABLE A-1

SURFACE SOIL SAMPLE DATA
SWMU 16
NSA CRANE
CRANE, INDIANA

LOCATION	16SB137	16SB138	16SB139	16SB140	16SB141	16SB142	16SB143	16SB144	16SB145	16SB145	16SB147
SAMPLE ID	16SS1370002	16SS1380002	16SS1390002	16SS1400002	16SS1410002	16SS1420002	16SS1430002	16SS1440002	16SS1450002	16SS1450002-D	16SS1470002
SAMPLE DATE	20110824	20110824	20110824	20110824	20110825	20110825	20110825	20110825	20110825	20110826	20110825
ROUND											
EVENT											
SAMPLE CODE	NORMAL	NORMAL	NORMAL	NORMAL	NORMAL	NORMAL	NORMAL	NORMAL	ORIG	DUP	NORMAL
MATRIX	SO	SO	SO	SO	SO	SO	SO	SO	SO	SO	SO
SAMPLE TYPE	NORMAL	NORMAL	NORMAL	NORMAL	NORMAL	NORMAL	NORMAL	NORMAL	NORMAL	NORMAL	NORMAL
SUBMATRIX	SS	SS	SS	SS	SS	SS	SS	SS	SS	SS	SS
TOP DEPTH	0	0	0	0	0	0	0	0	0	0	0
BOTTOM DEPTH	2	2	2	2	2	2	2	2	2	2	2
DIOXINS/FURANS (NG/KG)											
1,2,3,4,6,7,8,9-OCDD											
1,2,3,4,6,7,8,9-OCDF											
1,2,3,4,6,7,8-HPCDD											
1,2,3,4,6,7,8-HPCDF											
1,2,3,4,7,8,9-HPCDF											
1,2,3,4,7,8-HXCDD											
1,2,3,4,7,8-HXCDF											
1,2,3,6,7,8-HXCDD											
1,2,3,6,7,8-HXCDF											
1,2,3,7,8,9-HXCDD											
1,2,3,7,8,9-HXCDF											
1,2,3,7,8-PECDD											
1,2,3,7,8-PECDF											
2,3,4,6,7,8-HXCDF											
2,3,4,7,8-PECDF											
2,3,7,8-TCDD											
2,3,7,8-TCDF											
TEQ BIRD											
TEQ BIRD HALFND											
TEQ MAMMAL											
TEQ MAMMAL HALFND											
TEQ WHO-2007											
TEQ WHO-2007 - HALFND											
TOTAL HPCDD											
TOTAL HPCDF											
TOTAL HXCDD											
TOTAL HXCDF											
TOTAL PECDD											
TOTAL PECDF											
TOTAL TCDD											
TOTAL TCDF											
EXPLOSIVES (MG/KG)											
1,3,5-TRINITROBENZENE											
1,3-DINITROBENZENE											
2,4,6-TRINITROTOLUENE											
2,4-DINITROTOLUENE											
2,6-DINITROTOLUENE											
2-AMINO-4,6-DINITROTOLUENE											
2-NITROTOLUENE											
3-NITROTOLUENE											
4-AMINO-2,6-DINITROTOLUENE											
4-NITROTOLUENE											
HMX											
NITROBENZENE											
PICRAMIC ACID											
PICRIC ACID											
RDX											
TETRYL											

TABLE A-1

SURFACE SOIL SAMPLE DATA
SWMU 16
NSA CRANE
CRANE, INDIANA

LOCATION	16SB137	16SB138	16SB139	16SB140	16SB141	16SB142	16SB143	16SB144	16SB145	16SB145	16SB147
SAMPLE ID	16SS1370002	16SS1380002	16SS1390002	16SS1400002	16SS1410002	16SS1420002	16SS1430002	16SS1440002	16SS1450002	16SS1450002-D	16SS1470002
SAMPLE DATE	20110824	20110824	20110824	20110824	20110825	20110825	20110825	20110825	20110825	20110826	20110825
ROUND											
EVENT											
SAMPLE CODE	NORMAL	NORMAL	NORMAL	NORMAL	NORMAL	NORMAL	NORMAL	NORMAL	ORIG	DUP	NORMAL
MATRIX	SO	SO	SO	SO	SO	SO	SO	SO	SO	SO	SO
SAMPLE TYPE	NORMAL	NORMAL	NORMAL	NORMAL	NORMAL	NORMAL	NORMAL	NORMAL	NORMAL	NORMAL	NORMAL
SUBMATRIX	SS	SS	SS	SS	SS	SS	SS	SS	SS	SS	SS
TOP DEPTH	0	0	0	0	0	0	0	0	0	0	0
BOTTOM DEPTH	2	2	2	2	2	2	2	2	2	2	2
HERBICIDES (UG/KG)											
HEXACHLOROPHENE											
PENTACHLOROPHENOL											
METALS (MG/KG)											
ALUMINUM											
ANTIMONY											
ARSENIC											
BARIUM											
BERYLLIUM											
CADMIUM											
CALCIUM											
CHROMIUM											
COBALT											
COPPER											
IRON											
LEAD											
LITHIUM											
MAGNESIUM											
MANGANESE											
MERCURY											
NICKEL											
POTASSIUM											
SELENIUM											
SILVER											
SODIUM											
STRONTIUM											
THALLIUM											
TIN											
TITANIUM											
VANADIUM											
ZINC											
METALS (UG/KG)											
LEAD											
MISCELLANEOUS PARAMETERS (%)											
PERCENT MOISTURE											
MISCELLANEOUS PARAMETERS (MEQ/100)											
CATION EXCHANGE CAPACITY											
MISCELLANEOUS PARAMETERS (MG/KG)											
TOTAL ORGANIC CARBON											
MISCELLANEOUS PARAMETERS (S.U.)											
PH											
PESTICIDES/PCBS (UG/KG)											
AROCLOR-1016											
AROCLOR-1221											
AROCLOR-1232											
AROCLOR-1242											
AROCLOR-1248											
AROCLOR-1254											
AROCLOR-1260											

TABLE A-1

SURFACE SOIL SAMPLE DATA
SWMU 16
NSA CRANE
CRANE, INDIANA

LOCATION	16SB137	16SB138	16SB139	16SB140	16SB141	16SB142	16SB143	16SB144	16SB145	16SB145	16SB147
SAMPLE ID	16SS1370002	16SS1380002	16SS1390002	16SS1400002	16SS1410002	16SS1420002	16SS1430002	16SS1440002	16SS1450002	16SS1450002-D	16SS1470002
SAMPLE DATE	20110824	20110824	20110824	20110824	20110825	20110825	20110825	20110825	20110825	20110826	20110825
ROUND											
EVENT											
SAMPLE CODE	NORMAL	NORMAL	NORMAL	NORMAL	NORMAL	NORMAL	NORMAL	NORMAL	ORIG	DUP	NORMAL
MATRIX	SO	SO	SO	SO	SO	SO	SO	SO	SO	SO	SO
SAMPLE TYPE	NORMAL	NORMAL	NORMAL	NORMAL	NORMAL	NORMAL	NORMAL	NORMAL	NORMAL	NORMAL	NORMAL
SUBMATRIX	SS	SS	SS	SS	SS	SS	SS	SS	SS	SS	SS
TOP DEPTH	0	0	0	0	0	0	0	0	0	0	0
BOTTOM DEPTH	2	2	2	2	2	2	2	2	2	2	2
PETROLEUM HYDROCARBONS (UG/KG)											
DRO (C08-C28)											
TPH (C06-C12)											
SEMIVOLATILES (UG/KG)											
1,2,4,5-TETRACHLOROBENZENE											
1,2,4-TRICHLOROBENZENE											
1,2-DICHLOROBENZENE											
1,3-DICHLOROBENZENE											
1,4-DICHLOROBENZENE											
1,4-NAPHTHOQUINONE											
1,4-PHENYLENEDIAMINE											
1-NAPHTHYLAMINE											
2,2'-OXYBIS(1-CHLOROPROPANE)											
2,3,4,6-TETRACHLOROPHENOL											
2,4,5-TRICHLOROPHENOL											
2,4,6-TRICHLOROPHENOL											
2,4-DICHLOROPHENOL											
2,4-DIMETHYLPHENOL											
2,4-DINITROPHENOL											
2,6-DICHLOROPHENOL											
2-ACETYLAMINOFLUORENE											
2-CHLORONAPHTHALENE											
2-CHLOROPHENOL											
2-METHYLNAPHTHALENE											
2-METHYLPHENOL											
2-NAPHTHYLAMINE											
2-NITROANILINE											
2-NITROPHENOL											
2-PICOLINE											
3&4-METHYLPHENOL											
3,3'-DICHLOROBENZIDINE											
3,3'-DIMETHYLBENZIDINE											
3-METHYLCHOLANTHRENE											
3-NITROANILINE											
4,6-DINITRO-2-METHYLPHENOL											
4-AMINOBIPHENYL											
4-BROMOPHENYL PHENYL ETHER											
4-CHLORO-3-METHYLPHENOL											
4-CHLOROANILINE											
4-CHLOROPHENYL PHENYL ETHER											
4-NITROANILINE											
4-NITROPHENOL											
4-NITROQUINOLINE-1-OXIDE											
5-NITRO-O-TOLUIDINE											
7,12-DIMETHYLBENZ(A)ANTHRACENE											
A,A-DIMETHYLPHENETHYLAMINE											
ACENAPHTHENE											
ACENAPHTHYLENE											
ACETOPHENONE											

TABLE A-1

SURFACE SOIL SAMPLE DATA
SWMU 16
NSA CRANE
CRANE, INDIANA

LOCATION	16SB137	16SB138	16SB139	16SB140	16SB141	16SB142	16SB143	16SB144	16SB145	16SB145	16SB147
SAMPLE ID	16SS1370002	16SS1380002	16SS1390002	16SS1400002	16SS1410002	16SS1420002	16SS1430002	16SS1440002	16SS1450002	16SS1450002-D	16SS1470002
SAMPLE DATE	20110824	20110824	20110824	20110824	20110825	20110825	20110825	20110825	20110825	20110826	20110825
ROUND											
EVENT											
SAMPLE CODE	NORMAL	NORMAL	NORMAL	NORMAL	NORMAL	NORMAL	NORMAL	NORMAL	ORIG	DUP	NORMAL
MATRIX	SO	SO	SO	SO	SO	SO	SO	SO	SO	SO	SO
SAMPLE TYPE	NORMAL	NORMAL	NORMAL	NORMAL	NORMAL	NORMAL	NORMAL	NORMAL	NORMAL	NORMAL	NORMAL
SUBMATRIX	SS	SS	SS	SS	SS	SS	SS	SS	SS	SS	SS
TOP DEPTH	0	0	0	0	0	0	0	0	0	0	0
BOTTOM DEPTH	2	2	2	2	2	2	2	2	2	2	2
ANILINE											
ANTHRACENE											
ARAMITE											
BENZO(A)ANTHRACENE											
BENZO(A)PYRENE											
BENZO(B)FLUORANTHENE											
BENZO(G,H,I)PERYLENE											
BENZO(K)FLUORANTHENE											
BENZYL ALCOHOL											
BIS(2-CHLOROETHOXY)METHANE											
BIS(2-CHLOROETHYL)ETHER											
BIS(2-ETHYLHEXYL)PHTHALATE											
BUTYL BENZYL PHTHALATE											
CHLOROBENZILATE											
CHRYSENE											
DIALLATE											
DIBENZO(A,H)ANTHRACENE											
DIBENZOFURAN											
DIETHYL PHTHALATE											
DIMETHYL PHTHALATE											
DI-N-BUTYL PHTHALATE											
DI-N-OCTYL PHTHALATE											
DIPHENYLAMINE											
ETHYL METHANE SULFONATE											
FLUORANTHENE											
FLUORENE											
HEXACHLOROBENZENE											
HEXACHLOROBUTADIENE											
HEXACHLOROCYCLOPENTADIENE											
HEXACHLOROETHANE											
HEXACHLOROPROPENE											
INDENO(1,2,3-CD)PYRENE											
ISODRIN											
ISOPHORONE											
ISOSAFROLE											
KEPONE											
METHAPYRILENE											
METHYL METHANE SULFONATE											
NAPHTHALENE											
N-NITROSODIETHYLAMINE											
N-NITROSODIMETHYLAMINE											
N-NITROSO-DI-N-BUTYLAMINE											
N-NITROSO-DI-N-PROPYLAMINE											
N-NITROSOMETHYLETHYLAMINE											
N-NITROSOMORPHOLINE											
N-NITROSOPIPERIDINE											
N-NITROSOPYRROLIDINE											
O,O,O-TRIETHYL PHOSPHOROTHIOATE											
O-TOLUIDINE											

TABLE A-1

SURFACE SOIL SAMPLE DATA
SWMU 16
NSA CRANE
CRANE, INDIANA

LOCATION	16SB137	16SB138	16SB139	16SB140	16SB141	16SB142	16SB143	16SB144	16SB145	16SB145	16SB147
SAMPLE ID	16SS1370002	16SS1380002	16SS1390002	16SS1400002	16SS1410002	16SS1420002	16SS1430002	16SS1440002	16SS1450002	16SS1450002-D	16SS1470002
SAMPLE DATE	20110824	20110824	20110824	20110824	20110825	20110825	20110825	20110825	20110825	20110826	20110825
ROUND											
EVENT											
SAMPLE CODE	NORMAL	NORMAL	NORMAL	NORMAL	NORMAL	NORMAL	NORMAL	NORMAL	ORIG	DUP	NORMAL
MATRIX	SO	SO	SO	SO	SO	SO	SO	SO	SO	SO	SO
SAMPLE TYPE	NORMAL	NORMAL	NORMAL	NORMAL	NORMAL	NORMAL	NORMAL	NORMAL	NORMAL	NORMAL	NORMAL
SUBMATRIX	SS	SS	SS	SS	SS	SS	SS	SS	SS	SS	SS
TOP DEPTH	0	0	0	0	0	0	0	0	0	0	0
BOTTOM DEPTH	2	2	2	2	2	2	2	2	2	2	2
PENTACHLOROBENZENE											
PENTACHLOROETHANE											
PENTACHLORONITROBENZENE											
PHENACETIN											
PHENANTHRENE											
PHENOL											
PRONAMIDE											
PYRENE											
PYRIDINE											
SAFROLE											
SOLVENT YELLOW 2											
VOLATILES (UG/KG)											
1,1,1,2-TETRACHLOROETHANE											
1,1,1-TRICHLOROETHANE											
1,1,2,2-TETRACHLOROETHANE											
1,1,2-TRICHLOROETHANE	0.516 U	0.519 U	0.287 U	0.492 U	0.5 U	0.519 U	0.501 U	0.533 U	0.529 U	0.5142 U	0.511 U
1,1,2-TRICHLOROTRIFLUOROETHANE											
1,1-DICHLOROETHANE											
1,1-DICHLOROETHENE											
1,2,3-TRICHLOROBENZENE											
1,2,3-TRICHLOROPROPANE											
1,2,4-TRICHLOROBENZENE											
1,2-DIBROMO-3-CHLOROPROPANE											
1,2-DIBROMOETHANE											
1,2-DICHLOROBENZENE											
1,2-DICHLOROETHANE											
1,2-DICHLOROPROPANE											
1,3-DICHLOROBENZENE											
1,4-DICHLOROBENZENE											
1,4-DIOXANE											
2-BUTANONE											
2-HEXANONE											
3-CHLOROPROPENE											
4-METHYL-2-PENTANONE											
ACETONE											
ACETONITRILE											
ACROLEIN											
ACRYLONITRILE											
BENZENE											
BROMODICHLOROMETHANE											
BROMOFORM											
BROMOMETHANE											
CARBON DISULFIDE											
CARBON TETRACHLORIDE											
CHLOROBENZENE											
CHLORODIBROMOMETHANE											
CHLOROETHANE											
CHLOROFORM											
CHLOROMETHANE											

TABLE A-1

SURFACE SOIL SAMPLE DATA
SWMU 16
NSA CRANE
CRANE, INDIANA

LOCATION	**16SB137**	**16SB138**	**16SB139**	**16SB140**	**16SB141**	**16SB142**	**16SB143**	**16SB144**	**16SB145**	**16SB145**	**16SB147**
SAMPLE ID	**16SS1370002**	**16SS1380002**	**16SS1390002**	**16SS1400002**	**16SS1410002**	**16SS1420002**	**16SS1430002**	**16SS1440002**	**16SS1450002**	**16SS1450002-D**	**16SS1470002**
SAMPLE DATE	**20110824**	**20110824**	**20110824**	**20110824**	**20110825**	**20110825**	**20110825**	**20110825**	**20110825**	**20110826**	**20110825**
ROUND											
EVENT											
SAMPLE CODE	**NORMAL**	**NORMAL**	**NORMAL**	**NORMAL**	**NORMAL**	**NORMAL**	**NORMAL**	**NORMAL**	**ORIG**	**DUP**	**NORMAL**
MATRIX	**SO**	**SO**	**SO**	**SO**	**SO**	**SO**	**SO**	**SO**	**SO**	**SO**	**SO**
SAMPLE TYPE	**NORMAL**	**NORMAL**	**NORMAL**	**NORMAL**	**NORMAL**	**NORMAL**	**NORMAL**	**NORMAL**	**NORMAL**	**NORMAL**	**NORMAL**
SUBMATRIX	**SS**	**SS**	**SS**	**SS**	**SS**	**SS**	**SS**	**SS**	**SS**	**SS**	**SS**
TOP DEPTH	**0**	**0**	**0**	**0**	**0**	**0**	**0**	**0**	**0**	**0**	**0**
BOTTOM DEPTH	**2**	**2**	**2**	**2**	**2**	**2**	**2**	**2**	**2**	**2**	**2**
CHLOROPRENE											
CIS-1,2-DICHLOROETHENE	0.516 U	0.519 U	0.287 U	0.492 U	0.5 U	0.519 U	0.501 U	0.533 U	0.529 U	0.5142 U	0.775 J
CIS-1,3-DICHLOROPROPENE											
CYCLOHEXANE											
DIBROMOMETHANE											
DICHLORODIFLUOROMETHANE											
ETHYL METHACRYLATE											
ETHYLBENZENE											
ISOBUTANOL											
ISOPROPYLBENZENE											
METHACRYLONITRILE											
METHYL ACETATE											
METHYL IODIDE											
METHYL METHACRYLATE											
METHYL TERT-BUTYL ETHER											
METHYLENE CHLORIDE											
PROPIONITRILE											
STYRENE											
TETRACHLOROETHENE											
TOLUENE											
TOTAL XYLENES											
TRANS-1,2-DICHLOROETHENE	0.499 J	0.519 U	0.287 U	0.492 U	0.5 U	0.519 U	0.501 U	0.533 U	0.529 U	0.5142 U	0.511 U
TRANS-1,3-DICHLOROPROPENE											
TRANS-1,4-DICHLORO-2-BUTENE											
TRICHLOROETHENE	14.6	2.76	0.315 U	0.541 U	0.55 U	0.571 U	0.551 U	0.586 U	0.582 U	0.565 U	19.3
TRICHLOROFLUOROMETHANE											
VINYL ACETATE											
VINYL CHLORIDE	0.516 U	0.519 U	0.287 U	0.492 U	0.5 U	0.519 U	0.501 U	0.533 U	0.529 U	0.5142 U	0.511 U

TABLE A-1

SURFACE SOIL SAMPLE DATA
SWMU 16
NSA CRANE
CRANE, INDIANA

LOCATION	16SB148	16SB151	16SB152	16SB153	16SB191	16SB192	16SB193	16SB194	16SB195	16SB196	16SB197
SAMPLE ID	16SS1480002	16SS1510002	16SS1520002	16SS1530002	16SS1910002	16SS1920002	16SS1930002	16SS1940002	16SS1950002	16SS1960002	16SS1970002
SAMPLE DATE	20110825	20110825	20110825	20110825	20110823	20110823	20110823	20110823	20110823	20110823	20110823
ROUND											
EVENT											
SAMPLE CODE	NORMAL	NORMAL	NORMAL	NORMAL	NORMAL	NORMAL	NORMAL	NORMAL	NORMAL	NORMAL	NORMAL
MATRIX	SO	SO	SO	SO	SO	SO	SO	SO	SO	SO	SO
SAMPLE TYPE	NORMAL	NORMAL	NORMAL	NORMAL	NORMAL	NORMAL	NORMAL	NORMAL	NORMAL	NORMAL	NORMAL
SUBMATRIX	SS	SS	SS	SS	SS	SS	SS	SS	SS	SS	SS
TOP DEPTH	0	0	0	0	0	0	0	0	0	0	0
BOTTOM DEPTH	2	2	2	2	2	2	2	2	2	2	2
DIOXINS/FURANS (NG/KG)											
1,2,3,4,6,7,8,9-OCDD											
1,2,3,4,6,7,8,9-OCDF											
1,2,3,4,6,7,8-HPCDD											
1,2,3,4,6,7,8-HPCDF											
1,2,3,4,7,8,9-HPCDF											
1,2,3,4,7,8-HXCDD											
1,2,3,4,7,8-HXCDF											
1,2,3,6,7,8-HXCDD											
1,2,3,6,7,8-HXCDF											
1,2,3,7,8,9-HXCDD											
1,2,3,7,8,9-HXCDF											
1,2,3,7,8-PECDD											
1,2,3,7,8-PECDF											
2,3,4,6,7,8-HXCDF											
2,3,4,7,8-PECDF											
2,3,7,8-TCDD											
2,3,7,8-TCDF											
TEQ BIRD											
TEQ BIRD HALFND											
TEQ MAMMAL											
TEQ MAMMAL HALFND											
TEQ WHO-2007											
TEQ WHO-2007 - HALFND											
TOTAL HPCDD											
TOTAL HPCDF											
TOTAL HXCDD											
TOTAL HXCDF											
TOTAL PECDD											
TOTAL PECDF											
TOTAL TCDD											
TOTAL TCDF											
EXPLOSIVES (MG/KG)											
1,3,5-TRINITROBENZENE											
1,3-DINITROBENZENE											
2,4,6-TRINITROTOLUENE											
2,4-DINITROTOLUENE											
2,6-DINITROTOLUENE											
2-AMINO-4,6-DINITROTOLUENE											
2-NITROTOLUENE											
3-NITROTOLUENE											
4-AMINO-2,6-DINITROTOLUENE											
4-NITROTOLUENE											
HMX											
NITROBENZENE											
PICRAMIC ACID											
PICRIC ACID											
RDX											
TETRYL											

TABLE A-1

SURFACE SOIL SAMPLE DATA
SWMU 16
NSA CRANE
CRANE, INDIANA

LOCATION	16SB148	16SB151	16SB152	16SB153	16SB191	16SB192	16SB193	16SB194	16SB195	16SB196	16SB197
SAMPLE ID	16SS1480002	16SS1510002	16SS1520002	16SS1530002	16SS1910002	16SS1920002	16SS1930002	16SS1940002	16SS1950002	16SS1960002	16SS1970002
SAMPLE DATE	20110825	20110825	20110825	20110825	20110823	20110823	20110823	20110823	20110823	20110823	20110823
ROUND											
EVENT											
SAMPLE CODE	NORMAL	NORMAL	NORMAL	NORMAL	NORMAL	NORMAL	NORMAL	NORMAL	NORMAL	NORMAL	NORMAL
MATRIX	SO	SO	SO	SO	SO	SO	SO	SO	SO	SO	SO
SAMPLE TYPE	NORMAL	NORMAL	NORMAL	NORMAL	NORMAL	NORMAL	NORMAL	NORMAL	NORMAL	NORMAL	NORMAL
SUBMATRIX	SS	SS	SS	SS	SS	SS	SS	SS	SS	SS	SS
TOP DEPTH	0	0	0	0	0	0	0	0	0	0	0
BOTTOM DEPTH	2	2	2	2	2	2	2	2	2	2	2
HERBICIDES (UG/KG)											
HEXACHLOROPHENE											
PENTACHLOROPHENOL											
METALS (MG/KG)											
ALUMINUM											
ANTIMONY											
ARSENIC											
BARIUM											
BERYLLIUM											
CADMIUM											
CALCIUM											
CHROMIUM											
COBALT											
COPPER											
IRON											
LEAD											
LITHIUM											
MAGNESIUM											
MANGANESE											
MERCURY											
NICKEL											
POTASSIUM											
SELENIUM											
SILVER											
SODIUM											
STRONTIUM											
THALLIUM											
TIN											
TITANIUM											
VANADIUM											
ZINC											
METALS (UG/KG)											
LEAD					57000	32000	17000	27000	26000	45000	35000
MISCELLANEOUS PARAMETERS (%)											
PERCENT MOISTURE					15	8	14	9	9	14	16
MISCELLANEOUS PARAMETERS (MEQ/100)											
CATION EXCHANGE CAPACITY											
MISCELLANEOUS PARAMETERS (MG/KG)											
TOTAL ORGANIC CARBON											
MISCELLANEOUS PARAMETERS (S.U.)											
PH											
PESTICIDES/PCBS (UG/KG)											
AROCLOR-1016											
AROCLOR-1221											
AROCLOR-1232											
AROCLOR-1242											
AROCLOR-1248											
AROCLOR-1254											
AROCLOR-1260											

TABLE A-1

SURFACE SOIL SAMPLE DATA
SWMU 16
NSA CRANE
CRANE, INDIANA

LOCATION	16SB148	16SB151	16SB152	16SB153	16SB191	16SB192	16SB193	16SB194	16SB195	16SB196	16SB197
SAMPLE ID	16SS1480002	16SS1510002	16SS1520002	16SS1530002	16SS1910002	16SS1920002	16SS1930002	16SS1940002	16SS1950002	16SS1960002	16SS1970002
SAMPLE DATE	20110825	20110825	20110825	20110825	20110823	20110823	20110823	20110823	20110823	20110823	20110823
ROUND											
EVENT											
SAMPLE CODE	NORMAL	NORMAL	NORMAL	NORMAL	NORMAL	NORMAL	NORMAL	NORMAL	NORMAL	NORMAL	NORMAL
MATRIX	SO	SO	SO	SO	SO	SO	SO	SO	SO	SO	SO
SAMPLE TYPE	NORMAL	NORMAL	NORMAL	NORMAL	NORMAL	NORMAL	NORMAL	NORMAL	NORMAL	NORMAL	NORMAL
SUBMATRIX	SS	SS	SS	SS	SS	SS	SS	SS	SS	SS	SS
TOP DEPTH	0	0	0	0	0	0	0	0	0	0	0
BOTTOM DEPTH	2	2	2	2	2	2	2	2	2	2	2
PETROLEUM HYDROCARBONS (UG/KG)											
DRO (C08-C28)					5800	2400 J	2300 J	12000 J	2900 J	3400 J	2000 J
TPH (C06-C12)					1200 UJ	1100 UJ	1200 UJ	1100 UJ	1100 UJ	1200 UJ	1200 UJ
SEMIVOLATILES (UG/KG)											
1,2,4,5-TETRACHLOROBENZENE											
1,2,4-TRICHLOROBENZENE											
1,2-DICHLOROBENZENE											
1,3-DICHLOROBENZENE											
1,4-DICHLOROBENZENE											
1,4-NAPHTHOQUINONE											
1,4-PHENYLENEDIAMINE											
1-NAPHTHYLAMINE											
2,2'-OXYBIS(1-CHLOROPROPANE)											
2,3,4,6-TETRACHLOROPHENOL											
2,4,5-TRICHLOROPHENOL											
2,4,6-TRICHLOROPHENOL											
2,4-DICHLOROPHENOL											
2,4-DIMETHYLPHENOL											
2,4-DINITROPHENOL											
2,6-DICHLOROPHENOL											
2-ACETYLAMINOFLUORENE											
2-CHLORONAPHTHALENE											
2-CHLOROPHENOL											
2-METHYLNAPHTHALENE											
2-METHYLPHENOL											
2-NAPHTHYLAMINE											
2-NITROANILINE											
2-NITROPHENOL											
2-PICOLINE											
3&4-METHYLPHENOL											
3,3'-DICHLOROBENZIDINE											
3,3'-DIMETHYLBENZIDINE											
3-METHYLCHOLANTHRENE											
3-NITROANILINE											
4,6-DINITRO-2-METHYLPHENOL											
4-AMINOBIPHENYL											
4-BROMOPHENYL PHENYL ETHER											
4-CHLORO-3-METHYLPHENOL											
4-CHLOROANILINE											
4-CHLOROPHENYL PHENYL ETHER											
4-NITROANILINE											
4-NITROPHENOL											
4-NITROQUINOLINE-1-OXIDE											
5-NITRO-O-TOLUIDINE											
7,12-DIMETHYLBENZ(A)ANTHRACENE											
A,A-DIMETHYLPHENETHYLAMINE											
ACENAPHTHENE											
ACENAPHTHYLENE											
ACETOPHENONE											

TABLE A-1

SURFACE SOIL SAMPLE DATA
SWMU 16
NSA CRANE
CRANE, INDIANA

LOCATION	16SB148	16SB151	16SB152	16SB153	16SB191	16SB192	16SB193	16SB194	16SB195	16SB196	16SB197
SAMPLE ID	16SS1480002	16SS1510002	16SS1520002	16SS1530002	16SS1910002	16SS1920002	16SS1930002	16SS1940002	16SS1950002	16SS1960002	16SS1970002
SAMPLE DATE	20110825	20110825	20110825	20110825	20110823	20110823	20110823	20110823	20110823	20110823	20110823
ROUND											
EVENT											
SAMPLE CODE	NORMAL	NORMAL	NORMAL	NORMAL	NORMAL	NORMAL	NORMAL	NORMAL	NORMAL	NORMAL	NORMAL
MATRIX	SO	SO	SO	SO	SO	SO	SO	SO	SO	SO	SO
SAMPLE TYPE	NORMAL	NORMAL	NORMAL	NORMAL	NORMAL	NORMAL	NORMAL	NORMAL	NORMAL	NORMAL	NORMAL
SUBMATRIX	SS	SS	SS	SS	SS	SS	SS	SS	SS	SS	SS
TOP DEPTH	0	0	0	0	0	0	0	0	0	0	0
BOTTOM DEPTH	2	2	2	2	2	2	2	2	2	2	2
ANILINE											
ANTHRACENE											
ARAMITE											
BENZO(A)ANTHRACENE											
BENZO(A)PYRENE											
BENZO(B)FLUORANTHENE											
BENZO(G,H,I)PERYLENE											
BENZO(K)FLUORANTHENE											
BENZYL ALCOHOL											
BIS(2-CHLOROETHOXY)METHANE											
BIS(2-CHLOROETHYL)ETHER											
BIS(2-ETHYLHEXYL)PHTHALATE											
BUTYL BENZYL PHTHALATE											
CHLOROBENZILATE											
CHRYSENE											
DIALLATE											
DIBENZO(A,H)ANTHRACENE											
DIBENZOFURAN											
DIETHYL PHTHALATE											
DIMETHYL PHTHALATE											
DI-N-BUTYL PHTHALATE											
DI-N-OCTYL PHTHALATE											
DIPHENYLAMINE											
ETHYL METHANE SULFONATE											
FLUORANTHENE											
FLUORENE											
HEXACHLOROBENZENE											
HEXACHLOROBUTADIENE											
HEXACHLOROCYCLOPENTADIENE											
HEXACHLOROETHANE											
HEXACHLOROPROPENE											
INDENO(1,2,3-CD)PYRENE											
ISODRIN											
ISOPHORONE											
ISOSAFROLE											
KEPONE											
METHAPYRILENE											
METHYL METHANE SULFONATE											
NAPHTHALENE											
N-NITROSODIETHYLAMINE											
N-NITROSODIMETHYLAMINE											
N-NITROSO-DI-N-BUTYLAMINE											
N-NITROSO-DI-N-PROPYLAMINE											
N-NITROSOMETHYLETHYLAMINE											
N-NITROSOMORPHOLINE											
N-NITROSOPIPERIDINE											
N-NITROSOPYRROLIDINE											
O,O,O-TRIETHYL PHOSPHOROTHIOATE											
O-TOLUIDINE											

TABLE A-1

SURFACE SOIL SAMPLE DATA
SWMU 16
NSA CRANE
CRANE, INDIANA

LOCATION	**16SB148**	**16SB151**	**16SB152**	**16SB153**	**16SB191**	**16SB192**	**16SB193**	**16SB194**	**16SB195**	**16SB196**	**16SB197**
SAMPLE ID	**16SS1480002**	**16SS1510002**	**16SS1520002**	**16SS1530002**	**16SS1910002**	**16SS1920002**	**16SS1930002**	**16SS1940002**	**16SS1950002**	**16SS1960002**	**16SS1970002**
SAMPLE DATE	**20110825**	**20110825**	**20110825**	**20110825**	**20110823**	**20110823**	**20110823**	**20110823**	**20110823**	**20110823**	**20110823**
ROUND											
EVENT											
SAMPLE CODE	**NORMAL**	**NORMAL**	**NORMAL**	**NORMAL**	**NORMAL**	**NORMAL**	**NORMAL**	**NORMAL**	**NORMAL**	**NORMAL**	**NORMAL**
MATRIX	**SO**	**SO**	**SO**	**SO**	**SO**	**SO**	**SO**	**SO**	**SO**	**SO**	**SO**
SAMPLE TYPE	**NORMAL**	**NORMAL**	**NORMAL**	**NORMAL**	**NORMAL**	**NORMAL**	**NORMAL**	**NORMAL**	**NORMAL**	**NORMAL**	**NORMAL**
SUBMATRIX	**SS**	**SS**	**SS**	**SS**	**SS**	**SS**	**SS**	**SS**	**SS**	**SS**	**SS**
TOP DEPTH	**0**	**0**	**0**	**0**	**0**	**0**	**0**	**0**	**0**	**0**	**0**
BOTTOM DEPTH	**2**	**2**	**2**	**2**	**2**	**2**	**2**	**2**	**2**	**2**	**2**
PENTACHLOROBENZENE											
PENTACHLOROETHANE											
PENTACHLORONITROBENZENE											
PHENACETIN											
PHENANTHRENE											
PHENOL											
PRONAMIDE											
PYRENE											
PYRIDINE											
SAFROLE											
SOLVENT YELLOW 2											
VOLATILES (UG/KG)											
1,1,1,2-TETRACHLOROETHANE					0.434 U	0.506 U	0.522 U	0.275 U	0.375 U	0.302 U	0.32 U
1,1,1-TRICHLOROETHANE					0.434 U	0.506 U	0.522 U	0.275 U	0.375 U	0.302 U	0.32 U
1,1,2,2-TETRACHLOROETHANE					0.434 U	0.506 U	0.522 U	0.275 U	0.375 U	0.302 U	0.32 U
1,1,2-TRICHLOROETHANE	0.533 U	0.501 U	0.539 U	0.519 U	0.434 U	0.506 U	0.522 U	0.275 U	0.375 U	0.302 U	0.32 U
1,1,2-TRICHLOROTRIFLUOROETHANE					2.32 U	2.7 U	2.79 U	1.47 U	2 U	1.61 U	1.71 U
1,1-DICHLOROETHANE					0.434 U	0.506 U	0.522 U	0.275 U	0.375 U	0.302 U	0.32 U
1,1-DICHLOROETHENE					0.434 U	0.506 U	0.522 U	0.275 U	0.375 U	0.302 U	0.32 U
1,2,3-TRICHLOROBENZENE					0.434 U	0.506 U	0.522 U	0.275 U	0.375 U	0.302 U	0.32 U
1,2,3-TRICHLOROPROPANE											
1,2,4-TRICHLOROBENZENE					0.434 U	0.506 U	0.522 U	0.275 U	0.375 U	0.302 U	0.32 U
1,2-DIBROMO-3-CHLOROPROPANE					0.434 U	0.506 U	0.522 U	0.275 U	0.375 U	0.302 U	0.32 U
1,2-DIBROMOETHANE					0.434 U	0.506 U	0.522 U	0.275 U	0.375 U	0.302 U	0.32 U
1,2-DICHLOROBENZENE					0.434 U	0.506 U	0.522 U	0.275 U	0.375 U	0.302 U	0.32 U
1,2-DICHLOROETHANE					0.434 U	0.506 U	0.522 U	0.275 U	0.375 U	0.302 U	0.32 U
1,2-DICHLOROPROPANE					0.434 U	0.506 U	0.522 U	0.275 U	0.375 U	0.302 U	0.32 U
1,3-DICHLOROBENZENE					0.434 U	0.506 U	0.522 U	0.275 U	0.375 U	0.302 U	0.32 U
1,4-DICHLOROBENZENE					0.434 U	0.506 U	0.522 U	0.275 U	0.375 U	0.302 U	0.32 U
1,4-DIOXANE											
2-BUTANONE					3.55 J	1.53 J	4.03 J	1.97 J	2.43 J	4.73	7.38
2-HEXANONE					2.17 U	2.53 U	2.61 U	1.37 U	1.87 U	1.51 U	1.6 U
3-CHLOROPROPENE											
4-METHYL-2-PENTANONE					1.81 U	2.11 U	2.18 U	1.15 U	1.56 U	1.26 U	1.33 U
ACETONE					19	14.2	36.7	19.5	20.5	32.4	56.8
ACETONITRILE											
ACROLEIN					2.24 U	2.61 U	2.7 U	1.42 U	1.94 U	1.56 U	1.65 U
ACRYLONITRILE											
BENZENE					0.246 J	0.506 U	0.522 U	0.275 U	0.375 U	0.443 J	0.32 U
BROMODICHLOROMETHANE					0.434 U	0.506 U	0.522 U	0.275 U	0.375 U	0.302 U	0.32 U
BROMOFORM					0.434 U	0.506 U	0.522 U	0.275 U	0.375 U	0.302 U	0.32 U
BROMOMETHANE					0.434 U	0.506 U	0.522 U	0.275 U	0.375 U	0.302 U	0.32 U
CARBON DISULFIDE					1.98 J	2.11 U	2.18 U	1.15 U	1.56 U	1.19 J	1.33 U
CARBON TETRACHLORIDE					0.434 U	0.506 U	0.522 U	0.275 U	0.375 U	0.302 U	0.32 U
CHLOROBENZENE					0.434 U	0.506 U	0.522 U	0.275 U	0.375 U	0.302 U	0.32 U
CHLORODIBROMOMETHANE					0.434 U	0.506 U	0.522 U	0.275 U	0.375 U	0.302 U	0.32 U
CHLOROETHANE					0.434 U	0.506 U	0.522 U	0.275 U	0.375 U	0.302 U	0.32 U
CHLOROFORM					0.434 U	0.506 U	0.522 U	0.275 U	0.375 U	0.302 U	0.32 U
CHLOROMETHANE					0.434 U	0.506 U	0.522 U	0.275 U	0.375 U	0.72	0.32 U

TABLE A-1

SURFACE SOIL SAMPLE DATA
SWMU 16
NSA CRANE
CRANE, INDIANA

LOCATION	**16SB148**	**16SB151**	**16SB152**	**16SB153**	**16SB191**	**16SB192**	**16SB193**	**16SB194**	**16SB195**	**16SB196**	**16SB197**
SAMPLE ID	**16SS1480002**	**16SS1510002**	**16SS1520002**	**16SS1530002**	**16SS1910002**	**16SS1920002**	**16SS1930002**	**16SS1940002**	**16SS1950002**	**16SS1960002**	**16SS1970002**
SAMPLE DATE	**20110825**	**20110825**	**20110825**	**20110825**	**20110823**	**20110823**	**20110823**	**20110823**	**20110823**	**20110823**	**20110823**
ROUND											
EVENT											
SAMPLE CODE	**NORMAL**	**NORMAL**	**NORMAL**	**NORMAL**	**NORMAL**	**NORMAL**	**NORMAL**	**NORMAL**	**NORMAL**	**NORMAL**	**NORMAL**
MATRIX	**SO**	**SO**	**SO**	**SO**	**SO**	**SO**	**SO**	**SO**	**SO**	**SO**	**SO**
SAMPLE TYPE	**NORMAL**	**NORMAL**	**NORMAL**	**NORMAL**	**NORMAL**	**NORMAL**	**NORMAL**	**NORMAL**	**NORMAL**	**NORMAL**	**NORMAL**
SUBMATRIX	**SS**	**SS**	**SS**	**SS**	**SS**	**SS**	**SS**	**SS**	**SS**	**SS**	**SS**
TOP DEPTH	**0**	**0**	**0**	**0**	**0**	**0**	**0**	**0**	**0**	**0**	**0**
BOTTOM DEPTH	**2**	**2**	**2**	**2**	**2**	**2**	**2**	**2**	**2**	**2**	**2**
CHLOROPRENE											
CIS-1,2-DICHLOROETHENE	0.533 U	1.34	0.539 U	0.519 U	0.434 U	0.506 U	0.522 U	0.275 U	0.375 U	0.302 U	0.32 U
CIS-1,3-DICHLOROPROPENE					0.434 U	0.506 U	0.522 U	0.275 U	0.375 U	0.302 U	0.32 U
CYCLOHEXANE					0.934	0.506 U	0.522 U	0.275 U	0.375 U	0.302 U	0.32 U
DIBROMOMETHANE											
DICHLORODIFLUOROMETHANE					0.492 U	0.573 U	0.592 U	0.311 U	0.425 U	0.342 U	0.363 U
ETHYL METHACRYLATE											
ETHYLBENZENE					0.434 U	0.506 U	0.522 U	0.275 U	0.375 U	0.297 J	0.32 U
ISOBUTANOL											
ISOPROPYLBENZENE					0.434 U	0.506 U	0.522 U	0.275 U	0.375 U	0.302 U	0.32 U
METHACRYLONITRILE											
METHYL ACETATE					2.4 U	1.53 J	1.85 J	1.39 J	2.07 U	1.67 U	4.26
METHYL IODIDE											
METHYL METHACRYLATE											
METHYL TERT-BUTYL ETHER					0.434 U	0.506 U	0.522 U	0.275 U	0.375 U	0.302 U	0.32 U
METHYLENE CHLORIDE					2.89 U	3.37 U	3.48 U	1.83 U	2.5 U	2.01 U	2.13 U
PROPIONITRILE											
STYRENE					0.434 U	0.506 U	0.522 U	0.275 U	0.375 U	0.302 U	0.32 U
TETRACHLOROETHENE					0.434 U	0.506 U	0.522 U	0.275 U	0.375 U	0.302 U	0.32 U
TOLUENE					0.68 J	0.506 U	0.522 U	0.275 U	0.219 J	1.02	0.32 U
TOTAL XYLENES					0.326 J	0.506 U	0.522 U	0.275 U	0.375 U	0.675	0.32 U
TRANS-1,2-DICHLOROETHENE	0.533 U	0.501 U	0.539 U	0.519 U	0.434 U	0.506 U	0.522 U	0.275 U	0.375 U	0.302 U	0.32 U
TRANS-1,3-DICHLOROPROPENE					0.434 U	0.506 U	0.522 U	0.275 U	0.375 U	0.302 U	0.32 U
TRANS-1,4-DICHLORO-2-BUTENE											
TRICHLOROETHENE	5.57	123	185	157	0.478 U	0.557 U	0.575 U	0.302 U	0.412 U	0.332 U	0.352 U
TRICHLOROFLUOROMETHANE					0.434 U	0.506 U	0.522 U	0.275 U	0.375 U	0.302 U	0.32 U
VINYL ACETATE					1.81 U	2.11 U	2.18 U	1.15 U	1.56 U	1.26 U	1.33 U
VINYL CHLORIDE	0.533 U	0.501 U	0.539 U	0.519 U	0.434 U	0.506 U	0.522 U	0.275 U	0.375 U	0.302 U	0.32 U

TABLE A-1

SURFACE SOIL SAMPLE DATA
SWMU 16
NSA CRANE
CRANE, INDIANA

LOCATION	16SB198	16SB198	16SB204	16SB205	16SB206	16SB207	16SB208	16SB209	16SB210	16SB211	16SB212
SAMPLE ID	16SS1980002	16SS1980002-D	16SS2040002	16SS2050002	16SS2060002	16SS207-0002	16SS208-0002	16SS209-0002	16SS210-0002	16SS211-0002	16SS212-0002
SAMPLE DATE	20110823	20110823	20110825	20110825	20110825	20121006	20121006	20121006	20121006	20121006	20121006
ROUND											
EVENT											
SAMPLE CODE	ORIG	DUP	NORMAL	NORMAL	NORMAL	NORMAL	NORMAL	NORMAL	NORMAL	NORMAL	NORMAL
MATRIX	SO	SO	SO	SO	SO	SO	SO	SO	SO	SO	SO
SAMPLE TYPE	NORMAL	NORMAL	NORMAL	NORMAL	NORMAL	NORMAL	NORMAL	NORMAL	NORMAL	NORMAL	NORMAL
SUBMATRIX	SS	SS	SS	SS	SS	SS	SS	SS	SS	SS	SS
TOP DEPTH	0	0	0	0	0	0	0	0	0	0	0
BOTTOM DEPTH	2	2	2	2	2	2	2	2	2	2	2
DIOXINS/FURANS (NG/KG)											
1,2,3,4,6,7,8,9-OCDD											
1,2,3,4,6,7,8,9-OCDF											
1,2,3,4,6,7,8-HPCDD											
1,2,3,4,6,7,8-HPCDF											
1,2,3,4,7,8,9-HPCDF											
1,2,3,4,7,8-HXCDD											
1,2,3,4,7,8-HXCDF											
1,2,3,6,7,8-HXCDD											
1,2,3,6,7,8-HXCDF											
1,2,3,7,8,9-HXCDD											
1,2,3,7,8,9-HXCDF											
1,2,3,7,8-PECDD											
1,2,3,7,8-PECDF											
2,3,4,6,7,8-HXCDF											
2,3,4,7,8-PECDF											
2,3,7,8-TCDD											
2,3,7,8-TCDF											
TEQ BIRD											
TEQ BIRD HALFND											
TEQ MAMMAL											
TEQ MAMMAL HALFND											
TEQ WHO-2007											
TEQ WHO-2007 - HALFND											
TOTAL HPCDD											
TOTAL HPCDF											
TOTAL HXCDD											
TOTAL HXCDF											
TOTAL PECDD											
TOTAL PECDF											
TOTAL TCDD											
TOTAL TCDF											
EXPLOSIVES (MG/KG)											
1,3,5-TRINITROBENZENE											
1,3-DINITROBENZENE											
2,4,6-TRINITROTOLUENE											
2,4-DINITROTOLUENE											
2,6-DINITROTOLUENE											
2-AMINO-4,6-DINITROTOLUENE											
2-NITROTOLUENE											
3-NITROTOLUENE											
4-AMINO-2,6-DINITROTOLUENE											
4-NITROTOLUENE											
HMX											
NITROBENZENE											
PICRAMIC ACID											
PICRIC ACID											
RDX											
TETRYL											

TABLE A-1

SURFACE SOIL SAMPLE DATA
SWMU 16
NSA CRANE
CRANE, INDIANA

LOCATION	16SB198	16SB198	16SB204	16SB205	16SB206	16SB207	16SB208	16SB209	16SB210	16SB211	16SB212
SAMPLE ID	16SS1980002	16SS1980002-D	16SS2040002	16SS2050002	16SS2060002	16SS207-0002	16SS208-0002	16SS209-0002	16SS210-0002	16SS211-0002	16SS212-0002
SAMPLE DATE	20110823	20110823	20110825	20110825	20110825	20121006	20121006	20121006	20121006	20121006	20121006
ROUND											
EVENT											
SAMPLE CODE	ORIG	DUP	NORMAL	NORMAL	NORMAL	NORMAL	NORMAL	NORMAL	NORMAL	NORMAL	NORMAL
MATRIX	SO	SO	SO	SO	SO	SO	SO	SO	SO	SO	SO
SAMPLE TYPE	NORMAL	NORMAL	NORMAL	NORMAL	NORMAL	NORMAL	NORMAL	NORMAL	NORMAL	NORMAL	NORMAL
SUBMATRIX	SS	SS	SS	SS	SS	SS	SS	SS	SS	SS	SS
TOP DEPTH	0	0	0	0	0	0	0	0	0	0	0
BOTTOM DEPTH	2	2	2	2	2	2	2	2	2	2	2
HERBICIDES (UG/KG)											
HEXACHLOROPHENE											
PENTACHLOROPHENOL											
METALS (MG/KG)											
ALUMINUM											
ANTIMONY											
ARSENIC											
BARIUM											
BERYLLIUM											
CADMIUM											
CALCIUM											
CHROMIUM											
COBALT											
COPPER											
IRON											
LEAD											
LITHIUM											
MAGNESIUM											
MANGANESE											
MERCURY											
NICKEL											
POTASSIUM											
SELENIUM											
SILVER											
SODIUM											
STRONTIUM											
THALLIUM											
TIN											
TITANIUM											
VANADIUM											
ZINC											
METALS (UG/KG)											
LEAD	67000 J	130000 J									
MISCELLANEOUS PARAMETERS (%)											
PERCENT MOISTURE	11	17									
MISCELLANEOUS PARAMETERS (MEQ/100)											
CATION EXCHANGE CAPACITY											
MISCELLANEOUS PARAMETERS (MG/KG)											
TOTAL ORGANIC CARBON											
MISCELLANEOUS PARAMETERS (S.U.)											
PH											
PESTICIDES/PCBS (UG/KG)											
AROCLOR-1016											
AROCLOR-1221											
AROCLOR-1232											
AROCLOR-1242											
AROCLOR-1248											
AROCLOR-1254											
AROCLOR-1260											

TABLE A-1

SURFACE SOIL SAMPLE DATA
SWMU 16
NSA CRANE
CRANE, INDIANA

LOCATION	16SB198	16SB198	16SB204	16SB205	16SB206	16SB207	16SB208	16SB209	16SB210	16SB211	16SB212
SAMPLE ID	16SS1980002	16SS1980002-D	16SS2040002	16SS2050002	16SS2060002	16SS207-0002	16SS208-0002	16SS209-0002	16SS210-0002	16SS211-0002	16SS212-0002
SAMPLE DATE	20110823	20110823	20110825	20110825	20110825	20121006	20121006	20121006	20121006	20121006	20121006
ROUND											
EVENT											
SAMPLE CODE	ORIG	DUP	NORMAL	NORMAL	NORMAL	NORMAL	NORMAL	NORMAL	NORMAL	NORMAL	NORMAL
MATRIX	SO	SO	SO	SO	SO	SO	SO	SO	SO	SO	SO
SAMPLE TYPE	NORMAL	NORMAL	NORMAL	NORMAL	NORMAL	NORMAL	NORMAL	NORMAL	NORMAL	NORMAL	NORMAL
SUBMATRIX	SS	SS	SS	SS	SS	SS	SS	SS	SS	SS	SS
TOP DEPTH	0	0	0	0	0	0	0	0	0	0	0
BOTTOM DEPTH	2	2	2	2	2	2	2	2	2	2	2
PETROLEUM HYDROCARBONS (UG/KG)											
DRO (C08-C28)	1700 J	1400 J									
TPH (C06-C12)	1100 UJ	1100 UR									
SEMIVOLATILES (UG/KG)											
1,2,4,5-TETRACHLOROBENZENE											
1,2,4-TRICHLOROBENZENE											
1,2-DICHLOROBENZENE											
1,3-DICHLOROBENZENE											
1,4-DICHLOROBENZENE											
1,4-NAPHTHOQUINONE											
1,4-PHENYLENEDIAMINE											
1-NAPHTHYLAMINE											
2,2'-OXYBIS(1-CHLOROPROPANE)											
2,3,4,6-TETRACHLOROPHENOL											
2,4,5-TRICHLOROPHENOL											
2,4,6-TRICHLOROPHENOL											
2,4-DICHLOROPHENOL											
2,4-DIMETHYLPHENOL											
2,4-DINITROPHENOL											
2,6-DICHLOROPHENOL											
2-ACETYLAMINOFLUORENE											
2-CHLORONAPHTHALENE											
2-CHLOROPHENOL											
2-METHYLNAPHTHALENE											
2-METHYLPHENOL											
2-NAPHTHYLAMINE											
2-NITROANILINE											
2-NITROPHENOL											
2-PICOLINE											
3&4-METHYLPHENOL											
3,3'-DICHLOROBENZIDINE											
3,3'-DIMETHYLBENZIDINE											
3-METHYLCHOLANTHRENE											
3-NITROANILINE											
4,6-DINITRO-2-METHYLPHENOL											
4-AMINOBIPHENYL											
4-BROMOPHENYL PHENYL ETHER											
4-CHLORO-3-METHYLPHENOL											
4-CHLOROANILINE											
4-CHLOROPHENYL PHENYL ETHER											
4-NITROANILINE											
4-NITROPHENOL											
4-NITROQUINOLINE-1-OXIDE											
5-NITRO-O-TOLUIDINE											
7,12-DIMETHYLBENZ(A)ANTHRACENE											
A,A-DIMETHYLPHENETHYLAMINE											
ACENAPHTHENE											
ACENAPHTHYLENE											
ACETOPHENONE											

TABLE A-1

SURFACE SOIL SAMPLE DATA
SWMU 16
NSA CRANE
CRANE, INDIANA

LOCATION	16SB198	16SB198	16SB204	16SB205	16SB206	16SB207	16SB208	16SB209	16SB210	16SB211	16SB212
SAMPLE ID	16SS1980002	16SS1980002-D	16SS2040002	16SS2050002	16SS2060002	16SS207-0002	16SS208-0002	16SS209-0002	16SS210-0002	16SS211-0002	16SS212-0002
SAMPLE DATE	20110823	20110823	20110825	20110825	20110825	20121006	20121006	20121006	20121006	20121006	20121006
ROUND											
EVENT											
SAMPLE CODE	ORIG	DUP	NORMAL	NORMAL	NORMAL	NORMAL	NORMAL	NORMAL	NORMAL	NORMAL	NORMAL
MATRIX	SO	SO	SO	SO	SO	SO	SO	SO	SO	SO	SO
SAMPLE TYPE	NORMAL	NORMAL	NORMAL	NORMAL	NORMAL	NORMAL	NORMAL	NORMAL	NORMAL	NORMAL	NORMAL
SUBMATRIX	SS	SS	SS	SS	SS	SS	SS	SS	SS	SS	SS
TOP DEPTH	0	0	0	0	0	0	0	0	0	0	0
BOTTOM DEPTH	2	2	2	2	2	2	2	2	2	2	2
ANILINE											
ANTHRACENE											
ARAMITE											
BENZO(A)ANTHRACENE											
BENZO(A)PYRENE											
BENZO(B)FLUORANTHENE											
BENZO(G,H,I)PERYLENE											
BENZO(K)FLUORANTHENE											
BENZYL ALCOHOL											
BIS(2-CHLOROETHOXY)METHANE											
BIS(2-CHLOROETHYL)ETHER											
BIS(2-ETHYLHEXYL)PHTHALATE											
BUTYL BENZYL PHTHALATE											
CHLOROBENZILATE											
CHRYSENE											
DIALLATE											
DIBENZO(A,H)ANTHRACENE											
DIBENZOFURAN											
DIETHYL PHTHALATE											
DIMETHYL PHTHALATE											
DI-N-BUTYL PHTHALATE											
DI-N-OCTYL PHTHALATE											
DIPHENYLAMINE											
ETHYL METHANE SULFONATE											
FLUORANTHENE											
FLUORENE											
HEXACHLOROBENZENE											
HEXACHLOROBUTADIENE											
HEXACHLOROCYCLOPENTADIENE											
HEXACHLOROETHANE											
HEXACHLOROPROPENE											
INDENO(1,2,3-CD)PYRENE											
ISODRIN											
ISOPHORONE											
ISOSAFROLE											
KEPONE											
METHAPYRILENE											
METHYL METHANE SULFONATE											
NAPHTHALENE											
N-NITROSODIETHYLAMINE											
N-NITROSODIMETHYLAMINE											
N-NITROSO-DI-N-BUTYLAMINE											
N-NITROSO-DI-N-PROPYLAMINE											
N-NITROSOMETHYLETHYLAMINE											
N-NITROSOMORPHOLINE											
N-NITROSOPIPERIDINE											
N-NITROSOPYRROLIDINE											
O,O,O-TRIETHYL PHOSPHOROTHIOATE											
O-TOLUIDINE											

TABLE A-1

SURFACE SOIL SAMPLE DATA
SWMU 16
NSA CRANE
CRANE, INDIANA

LOCATION	16SB198	16SB198	16SB204	16SB205	16SB206	16SB207	16SB208	16SB209	16SB210	16SB211	16SB212
SAMPLE ID	16SS1980002	16SS1980002-D	16SS2040002	16SS2050002	16SS2060002	16SS207-0002	16SS208-0002	16SS209-0002	16SS210-0002	16SS211-0002	16SS212-0002
SAMPLE DATE	20110823	20110823	20110825	20110825	20110825	20121006	20121006	20121006	20121006	20121006	20121006
ROUND											
EVENT											
SAMPLE CODE	ORIG	DUP	NORMAL	NORMAL	NORMAL	NORMAL	NORMAL	NORMAL	NORMAL	NORMAL	NORMAL
MATRIX	SO	SO	SO	SO	SO	SO	SO	SO	SO	SO	SO
SAMPLE TYPE	NORMAL	NORMAL	NORMAL	NORMAL	NORMAL	NORMAL	NORMAL	NORMAL	NORMAL	NORMAL	NORMAL
SUBMATRIX	SS	SS	SS	SS	SS	SS	SS	SS	SS	SS	SS
TOP DEPTH	0	0	0	0	0	0	0	0	0	0	0
BOTTOM DEPTH	2	2	2	2	2	2	2	2	2	2	2
PENTACHLOROBENZENE											
PENTACHLOROETHANE											
PENTACHLORONITROBENZENE											
PHENACETIN											
PHENANTHRENE											
PHENOL											
PRONAMIDE											
PYRENE											
PYRIDINE											
SAFROLE											
SOLVENT YELLOW 2											
VOLATILES (UG/KG)											
1,1,1,2-TETRACHLOROETHANE	0.494 U	0.522 U									
1,1,1-TRICHLOROETHANE	0.494 U	0.522 U									
1,1,2,2-TETRACHLOROETHANE	0.494 U	0.522 U									
1,1,2-TRICHLOROETHANE	0.494 U	0.522 U	0.471 U	0.365 J	0.531 U	2.48 U	2.28 U	2.23 U	2.54 U	2.99 UJ	2.38 U
1,1,2-TRICHLOROTRIFLUOROETHANE	2.64 U	2.79 U									
1,1-DICHLOROETHANE	0.494 U	0.522 U									
1,1-DICHLOROETHENE	0.494 U	0.522 U									
1,2,3-TRICHLOROBENZENE	0.494 U	0.522 U									
1,2,3-TRICHLOROPROPANE											
1,2,4-TRICHLOROBENZENE	0.494 U	0.522 U									
1,2-DIBROMO-3-CHLOROPROPANE	0.494 U	0.522 U									
1,2-DIBROMOETHANE	0.494 U	0.522 U									
1,2-DICHLOROBENZENE	0.494 U	0.522 U									
1,2-DICHLOROETHANE	0.494 U	0.522 U									
1,2-DICHLOROPROPANE	0.494 U	0.522 U									
1,3-DICHLOROBENZENE	0.494 U	0.522 U									
1,4-DICHLOROBENZENE	0.494 U	0.522 U									
1,4-DIOXANE											
2-BUTANONE	18.7 J	54.9 J									
2-HEXANONE	2.47 U	1.97 J									
3-CHLOROPROPENE											
4-METHYL-2-PENTANONE	2.06 U	2.18 U									
ACETONE	90.3 J	298 J									
ACETONITRILE											
ACROLEIN	2.55 UJ	9.78 J									
ACRYLONITRILE											
BENZENE	0.494 UJ	1.54 J									
BROMODICHLOROMETHANE	0.494 U	0.522 U									
BROMOFORM	0.494 U	0.522 U									
BROMOMETHANE	0.494 U	0.27 J									
CARBON DISULFIDE	2.06 U	2.18 U									
CARBON TETRACHLORIDE	0.494 U	0.522 U				2.48 U	2.28 U	2.23 U	2.54 U	2.99 UJ	2.38 U
CHLOROBENZENE	0.494 U	0.522 U									
CHLORODIBROMOMETHANE	0.494 U	0.522 U									
CHLOROETHANE	0.494 U	0.522 U									
CHLOROFORM	0.494 U	0.522 U									
CHLOROMETHANE	0.494 U	0.522 U									

TABLE A-1

SURFACE SOIL SAMPLE DATA
SWMU 16
NSA CRANE
CRANE, INDIANA

LOCATION	**16SB198**	**16SB198**	**16SB204**	**16SB205**	**16SB206**	**16SB207**	**16SB208**	**16SB209**	**16SB210**	**16SB211**	**16SB212**
SAMPLE ID	**16SS1980002**	**16SS1980002-D**	**16SS2040002**	**16SS2050002**	**16SS2060002**	**16SS207-0002**	**16SS208-0002**	**16SS209-0002**	**16SS210-0002**	**16SS211-0002**	**16SS212-0002**
SAMPLE DATE	**20110823**	**20110823**	**20110825**	**20110825**	**20110825**	**20121006**	**20121006**	**20121006**	**20121006**	**20121006**	**20121006**
ROUND											
EVENT											
SAMPLE CODE	**ORIG**	**DUP**	**NORMAL**	**NORMAL**	**NORMAL**	**NORMAL**	**NORMAL**	**NORMAL**	**NORMAL**	**NORMAL**	**NORMAL**
MATRIX	**SO**	**SO**	**SO**	**SO**	**SO**	**SO**	**SO**	**SO**	**SO**	**SO**	**SO**
SAMPLE TYPE	**NORMAL**	**NORMAL**	**NORMAL**	**NORMAL**	**NORMAL**	**NORMAL**	**NORMAL**	**NORMAL**	**NORMAL**	**NORMAL**	**NORMAL**
SUBMATRIX	**SS**	**SS**	**SS**	**SS**	**SS**	**SS**	**SS**	**SS**	**SS**	**SS**	**SS**
TOP DEPTH	**0**	**0**	**0**	**0**	**0**	**0**	**0**	**0**	**0**	**0**	**0**
BOTTOM DEPTH	**2**	**2**	**2**	**2**	**2**	**2**	**2**	**2**	**2**	**2**	**2**
CHLOROPRENE											
CIS-1,2-DICHLOROETHENE	0.494 U	0.522 U	0.628 J	32.5 J	1.42	2.48 UJ	2.28 UJ	2.23 UJ	2.54 UJ	2.99 UJ	2.38 UJ
CIS-1,3-DICHLOROPROPENE	0.494 U	0.522 U									
CYCLOHEXANE	0.494 U	0.522 U									
DIBROMOMETHANE											
DICHLORODIFLUOROMETHANE	0.56 U	0.592 U									
ETHYL METHACRYLATE											
ETHYLBENZENE	0.494 U	0.522 U									
ISOBUTANOL											
ISOPROPYLBENZENE	0.494 U	0.522 U									
METHACRYLONITRILE											
METHYL ACETATE	17.2	17									
METHYL IODIDE											
METHYL METHACRYLATE											
METHYL TERT-BUTYL ETHER	0.494 U	0.522 U									
METHYLENE CHLORIDE	4.94 U	3.48 U									
PROPIONITRILE											
STYRENE	0.494 U	0.522 U									
TETRACHLOROETHENE	0.494 U	0.522 U				2.48 U	2.28 U	2.23 U	2.54 U	2.99 UJ	2.38 U
TOLUENE	0.478 J	0.383 J									
TOTAL XYLENES	0.494 U	0.522 U									
TRANS-1,2-DICHLOROETHENE	0.494 U	0.522 U	0.471 U	0.523 J	0.531 U	2.48 U	2.28 U	2.23 U	2.54 U	2.99 UJ	2.38 U
TRANS-1,3-DICHLOROPROPENE	0.494 U	0.522 U									
TRANS-1,4-DICHLORO-2-BUTENE											
TRICHLOROETHENE	0.544 U	0.575 U	45.6	234	11.9	10.4 J	15.3	44.2	2.54 U	13.4 J	23.8
TRICHLOROFLUOROMETHANE	0.494 U	0.522 U									
VINYL ACETATE	2.06 U	2.18 U									
VINYL CHLORIDE	0.494 U	0.522 U	0.471 U	0.498 U	0.531 U	2.48 U	2.28 U	2.23 U	2.54 U	2.99 UJ	2.38 U

TABLE A-1

SURFACE SOIL SAMPLE DATA
SWMU 16
NSA CRANE
CRANE, INDIANA

LOCATION	16SB213	16SB214	16SB215	16SB215	16SB216	16SB217	16SB218	16SB219	16SB220	16SB236	16SB236
SAMPLE ID	16SS213-0002	16SS214-0002	16SS215-0002	16SS215-0002-D	16SS216-0002	16SS217-0002	16SS218-0002	16SS219-0002	16SS220-0002	16SS2360002	16SS2360002-D
SAMPLE DATE	20121006	20121006	20121006	20121006	20121006	20121006	20121006	20121006	20121006	20121130	20121130
ROUND											
EVENT											
SAMPLE CODE	NORMAL	NORMAL	ORIG	DUP	NORMAL	NORMAL	NORMAL	NORMAL	NORMAL	ORIG	DUP
MATRIX	SO	SO	SO	SO	SO	SO	SO	SO	SO	SO	SO
SAMPLE TYPE	NORMAL	NORMAL	NORMAL	NORMAL	NORMAL	NORMAL	NORMAL	NORMAL	NORMAL	NORMAL	NORMAL
SUBMATRIX	SS	SS	SS	SS	SS	SS	SS	SS	SS	SS	SS
TOP DEPTH	0	0	0	0	0	0	0	0	0	0	0
BOTTOM DEPTH	2	2	2	2	2	2	2	2	2	2	2
DIOXINS/FURANS (NG/KG)											
1,2,3,4,6,7,8,9-OCDD											
1,2,3,4,6,7,8,9-OCDF											
1,2,3,4,6,7,8-HPCDD											
1,2,3,4,6,7,8-HPCDF											
1,2,3,4,7,8,9-HPCDF											
1,2,3,4,7,8-HXCDD											
1,2,3,4,7,8-HXCDF											
1,2,3,6,7,8-HXCDD											
1,2,3,6,7,8-HXCDF											
1,2,3,7,8,9-HXCDD											
1,2,3,7,8,9-HXCDF											
1,2,3,7,8-PECDD											
1,2,3,7,8-PECDF											
2,3,4,6,7,8-HXCDF											
2,3,4,7,8-PECDF											
2,3,7,8-TCDD											
2,3,7,8-TCDF											
TEQ BIRD											
TEQ BIRD HALFND											
TEQ MAMMAL											
TEQ MAMMAL HALFND											
TEQ WHO-2007											
TEQ WHO-2007 - HALFND											
TOTAL HPCDD											
TOTAL HPCDF											
TOTAL HXCDD											
TOTAL HXCDF											
TOTAL PECDD											
TOTAL PECDF											
TOTAL TCDD											
TOTAL TCDF											
EXPLOSIVES (MG/KG)											
1,3,5-TRINITROBENZENE											
1,3-DINITROBENZENE											
2,4,6-TRINITROTOLUENE											
2,4-DINITROTOLUENE											
2,6-DINITROTOLUENE											
2-AMINO-4,6-DINITROTOLUENE											
2-NITROTOLUENE											
3-NITROTOLUENE											
4-AMINO-2,6-DINITROTOLUENE											
4-NITROTOLUENE											
HMX											
NITROBENZENE											
PICRAMIC ACID											
PICRIC ACID											
RDX											
TETRYL											

TABLE A-1

SURFACE SOIL SAMPLE DATA
SWMU 16
NSA CRANE
CRANE, INDIANA

LOCATION	16SB213	16SB214	16SB215	16SB215	16SB216	16SB217	16SB218	16SB219	16SB220	16SB236	16SB236
SAMPLE ID	16SS213-0002	16SS214-0002	16SS215-0002	16SS215-0002-D	16SS216-0002	16SS217-0002	16SS218-0002	16SS219-0002	16SS220-0002	16SS2360002	16SS2360002-D
SAMPLE DATE	20121006	20121006	20121006	20121006	20121006	20121006	20121006	20121006	20121006	20121130	20121130
ROUND											
EVENT											
SAMPLE CODE	NORMAL	NORMAL	ORIG	DUP	NORMAL	NORMAL	NORMAL	NORMAL	NORMAL	ORIG	DUP
MATRIX	SO	SO	SO	SO	SO	SO	SO	SO	SO	SO	SO
SAMPLE TYPE	NORMAL	NORMAL	NORMAL	NORMAL	NORMAL	NORMAL	NORMAL	NORMAL	NORMAL	NORMAL	NORMAL
SUBMATRIX	SS	SS	SS	SS	SS	SS	SS	SS	SS	SS	SS
TOP DEPTH	0	0	0	0	0	0	0	0	0	0	0
BOTTOM DEPTH	2	2	2	2	2	2	2	2	2	2	2
HERBICIDES (UG/KG)											
HEXACHLOROPHENE											
PENTACHLOROPHENOL											
METALS (MG/KG)											
ALUMINUM											
ANTIMONY											
ARSENIC											
BARIUM											
BERYLLIUM											
CADMIUM											
CALCIUM											
CHROMIUM											
COBALT											
COPPER											
IRON											
LEAD											
LITHIUM											
MAGNESIUM											
MANGANESE											
MERCURY											
NICKEL											
POTASSIUM											
SELENIUM											
SILVER											
SODIUM											
STRONTIUM											
THALLIUM											
TIN											
TITANIUM											
VANADIUM											
ZINC											
METALS (UG/KG)											
LEAD											
MISCELLANEOUS PARAMETERS (%)											
PERCENT MOISTURE											
MISCELLANEOUS PARAMETERS (MEQ/100)											
CATION EXCHANGE CAPACITY											
MISCELLANEOUS PARAMETERS (MG/KG)											
TOTAL ORGANIC CARBON											
MISCELLANEOUS PARAMETERS (S.U.)											
PH											
PESTICIDES/PCBS (UG/KG)											
AROCLOR-1016											
AROCLOR-1221											
AROCLOR-1232											
AROCLOR-1242											
AROCLOR-1248											
AROCLOR-1254											
AROCLOR-1260											

TABLE A-1

SURFACE SOIL SAMPLE DATA
SWMU 16
NSA CRANE
CRANE, INDIANA

LOCATION	16SB213	16SB214	16SB215	16SB215	16SB216	16SB217	16SB218	16SB219	16SB220	16SB236	16SB236
SAMPLE ID	16SS213-0002	16SS214-0002	16SS215-0002	16SS215-0002-D	16SS216-0002	16SS217-0002	16SS218-0002	16SS219-0002	16SS220-0002	16SS2360002	16SS2360002-D
SAMPLE DATE	20121006	20121006	20121006	20121006	20121006	20121006	20121006	20121006	20121006	20121130	20121130
ROUND											
EVENT											
SAMPLE CODE	NORMAL	NORMAL	ORIG	DUP	NORMAL	NORMAL	NORMAL	NORMAL	NORMAL	ORIG	DUP
MATRIX	SO	SO	SO	SO	SO	SO	SO	SO	SO	SO	SO
SAMPLE TYPE	NORMAL	NORMAL	NORMAL	NORMAL	NORMAL	NORMAL	NORMAL	NORMAL	NORMAL	NORMAL	NORMAL
SUBMATRIX	SS	SS	SS	SS	SS	SS	SS	SS	SS	SS	SS
TOP DEPTH	0	0	0	0	0	0	0	0	0	0	0
BOTTOM DEPTH	2	2	2	2	2	2	2	2	2	2	2
PETROLEUM HYDROCARBONS (UG/KG)											
DRO (C08-C28)											
TPH (C06-C12)											
SEMIVOLATILES (UG/KG)											
1,2,4,5-TETRACHLOROBENZENE											
1,2,4-TRICHLOROBENZENE											
1,2-DICHLOROBENZENE											
1,3-DICHLOROBENZENE											
1,4-DICHLOROBENZENE											
1,4-NAPHTHOQUINONE											
1,4-PHENYLENEDIAMINE											
1-NAPHTHYLAMINE											
2,2'-OXYBIS(1-CHLOROPROPANE)											
2,3,4,6-TETRACHLOROPHENOL											
2,4,5-TRICHLOROPHENOL											
2,4,6-TRICHLOROPHENOL											
2,4-DICHLOROPHENOL											
2,4-DIMETHYLPHENOL											
2,4-DINITROPHENOL											
2,6-DICHLOROPHENOL											
2-ACETYLAMINOFLUORENE											
2-CHLORONAPHTHALENE											
2-CHLOROPHENOL											
2-METHYLNAPHTHALENE											
2-METHYLPHENOL											
2-NAPHTHYLAMINE											
2-NITROANILINE											
2-NITROPHENOL											
2-PICOLINE											
3&4-METHYLPHENOL											
3,3'-DICHLOROBENZIDINE											
3,3'-DIMETHYLBENZIDINE											
3-METHYLCHOLANTHRENE											
3-NITROANILINE											
4,6-DINITRO-2-METHYLPHENOL											
4-AMINOBIPHENYL											
4-BROMOPHENYL PHENYL ETHER											
4-CHLORO-3-METHYLPHENOL											
4-CHLOROANILINE											
4-CHLOROPHENYL PHENYL ETHER											
4-NITROANILINE											
4-NITROPHENOL											
4-NITROQUINOLINE-1-OXIDE											
5-NITRO-O-TOLUIDINE											
7,12-DIMETHYLBENZ(A)ANTHRACENE											
A,A-DIMETHYLPHENETHYLAMINE											
ACENAPHTHENE											
ACENAPHTHYLENE											
ACETOPHENONE											

TABLE A-1

SURFACE SOIL SAMPLE DATA
SWMU 16
NSA CRANE
CRANE, INDIANA

LOCATION	16SB213	16SB214	16SB215	16SB215	16SB216	16SB217	16SB218	16SB219	16SB220	16SB236	16SB236
SAMPLE ID	16SS213-0002	16SS214-0002	16SS215-0002	16SS215-0002-D	16SS216-0002	16SS217-0002	16SS218-0002	16SS219-0002	16SS220-0002	16SS2360002	16SS2360002-D
SAMPLE DATE	20121006	20121006	20121006	20121006	20121006	20121006	20121006	20121006	20121006	20121130	20121130
ROUND											
EVENT											
SAMPLE CODE	NORMAL	NORMAL	ORIG	DUP	NORMAL	NORMAL	NORMAL	NORMAL	NORMAL	ORIG	DUP
MATRIX	SO	SO	SO	SO	SO	SO	SO	SO	SO	SO	SO
SAMPLE TYPE	NORMAL	NORMAL	NORMAL	NORMAL	NORMAL	NORMAL	NORMAL	NORMAL	NORMAL	NORMAL	NORMAL
SUBMATRIX	SS	SS	SS	SS	SS	SS	SS	SS	SS	SS	SS
TOP DEPTH	0	0	0	0	0	0	0	0	0	0	0
BOTTOM DEPTH	2	2	2	2	2	2	2	2	2	2	2
ANILINE											
ANTHRACENE											
ARAMITE											
BENZO(A)ANTHRACENE											
BENZO(A)PYRENE											
BENZO(B)FLUORANTHENE											
BENZO(G,H,I)PERYLENE											
BENZO(K)FLUORANTHENE											
BENZYL ALCOHOL											
BIS(2-CHLOROETHOXY)METHANE											
BIS(2-CHLOROETHYL)ETHER											
BIS(2-ETHYLHEXYL)PHTHALATE											
BUTYL BENZYL PHTHALATE											
CHLOROBENZILATE											
CHRYSENE											
DIALLATE											
DIBENZO(A,H)ANTHRACENE											
DIBENZOFURAN											
DIETHYL PHTHALATE											
DIMETHYL PHTHALATE											
DI-N-BUTYL PHTHALATE											
DI-N-OCTYL PHTHALATE											
DIPHENYLAMINE											
ETHYL METHANE SULFONATE											
FLUORANTHENE											
FLUORENE											
HEXACHLOROBENZENE											
HEXACHLOROBUTADIENE											
HEXACHLOROCYCLOPENTADIENE											
HEXACHLOROETHANE											
HEXACHLOROPROPENE											
INDENO(1,2,3-CD)PYRENE											
ISODRIN											
ISOPHORONE											
ISOSAFROLE											
KEPONE											
METHAPYRILENE											
METHYL METHANE SULFONATE											
NAPHTHALENE											
N-NITROSODIETHYLAMINE											
N-NITROSODIMETHYLAMINE											
N-NITROSO-DI-N-BUTYLAMINE											
N-NITROSO-DI-N-PROPYLAMINE											
N-NITROSOMETHYLETHYLAMINE											
N-NITROSOMORPHOLINE											
N-NITROSOPIPERIDINE											
N-NITROSOPYRROLIDINE											
O,O,O-TRIETHYL PHOSPHOROTHIOATE											
O-TOLUIDINE											

TABLE A-1

SURFACE SOIL SAMPLE DATA
SWMU 16
NSA CRANE
CRANE, INDIANA

LOCATION	16SB213	16SB214	16SB215	16SB215	16SB216	16SB217	16SB218	16SB219	16SB220	16SB236	16SB236
SAMPLE ID	16SS213-0002	16SS214-0002	16SS215-0002	16SS215-0002-D	16SS216-0002	16SS217-0002	16SS218-0002	16SS219-0002	16SS220-0002	16SS2360002	16SS2360002-D
SAMPLE DATE	20121006	20121006	20121006	20121006	20121006	20121006	20121006	20121006	20121006	20121130	20121130
ROUND											
EVENT											
SAMPLE CODE	NORMAL	NORMAL	ORIG	DUP	NORMAL	NORMAL	NORMAL	NORMAL	NORMAL	ORIG	DUP
MATRIX	SO	SO	SO	SO	SO	SO	SO	SO	SO	SO	SO
SAMPLE TYPE	NORMAL	NORMAL	NORMAL	NORMAL	NORMAL	NORMAL	NORMAL	NORMAL	NORMAL	NORMAL	NORMAL
SUBMATRIX	SS	SS	SS	SS	SS	SS	SS	SS	SS	SS	SS
TOP DEPTH	0	0	0	0	0	0	0	0	0	0	0
BOTTOM DEPTH	2	2	2	2	2	2	2	2	2	2	2
PENTACHLOROBENZENE											
PENTACHLOROETHANE											
PENTACHLORONITROBENZENE											
PHENACETIN											
PHENANTHRENE											
PHENOL											
PRONAMIDE											
PYRENE											
PYRIDINE											
SAFROLE											
SOLVENT YELLOW 2											
VOLATILES (UG/KG)											
1,1,1,2-TETRACHLOROETHANE											
1,1,1-TRICHLOROETHANE											
1,1,2,2-TETRACHLOROETHANE											
1,1,2-TRICHLOROETHANE	2.59 U	2.86 U	2.54 U	2.41 U	2.52 U	2.21 U	2.51 UJ	2.39 U	2.51 U	2.31 U	2.07 U
1,1,2-TRICHLOROTRIFLUOROETHANE											
1,1-DICHLOROETHANE											
1,1-DICHLOROETHENE											
1,2,3-TRICHLOROBENZENE											
1,2,3-TRICHLOROPROPANE											
1,2,4-TRICHLOROBENZENE											
1,2-DIBROMO-3-CHLOROPROPANE											
1,2-DIBROMOETHANE											
1,2-DICHLOROBENZENE											
1,2-DICHLOROETHANE											
1,2-DICHLOROPROPANE											
1,3-DICHLOROBENZENE											
1,4-DICHLOROBENZENE											
1,4-DIOXANE											
2-BUTANONE											
2-HEXANONE											
3-CHLOROPROPENE											
4-METHYL-2-PENTANONE											
ACETONE											
ACETONITRILE											
ACROLEIN											
ACRYLONITRILE											
BENZENE											
BROMODICHLOROMETHANE											
BROMOFORM											
BROMOMETHANE											
CARBON DISULFIDE											
CARBON TETRACHLORIDE	2.59 U	2.86 U	2.54 U	2.41 U	2.52 U	2.21 U	2.51 UJ	2.39 U	2.51 U	2.31 U	2.07 U
CHLOROBENZENE											
CHLORODIBROMOMETHANE											
CHLOROETHANE											
CHLOROFORM											
CHLOROMETHANE											

TABLE A-1

SURFACE SOIL SAMPLE DATA
SWMU 16
NSA CRANE
CRANE, INDIANA

LOCATION	16SB213	16SB214	16SB215	16SB215	16SB216	16SB217	16SB218	16SB219	16SB220	16SB236	16SB236
SAMPLE ID	16SS213-0002	16SS214-0002	16SS215-0002	16SS215-0002-D	16SS216-0002	16SS217-0002	16SS218-0002	16SS219-0002	16SS220-0002	16SS2360002	16SS2360002-D
SAMPLE DATE	20121006	20121006	20121006	20121006	20121006	20121006	20121006	20121006	20121006	20121130	20121130
ROUND											
EVENT											
SAMPLE CODE	NORMAL	NORMAL	ORIG	DUP	NORMAL	NORMAL	NORMAL	NORMAL	NORMAL	ORIG	DUP
MATRIX	SO	SO	SO	SO	SO	SO	SO	SO	SO	SO	SO
SAMPLE TYPE	NORMAL	NORMAL	NORMAL	NORMAL	NORMAL	NORMAL	NORMAL	NORMAL	NORMAL	NORMAL	NORMAL
SUBMATRIX	SS	SS	SS	SS	SS	SS	SS	SS	SS	SS	SS
TOP DEPTH	0	0	0	0	0	0	0	0	0	0	0
BOTTOM DEPTH	2	2	2	2	2	2	2	2	2	2	2
CHLOROPRENE											
CIS-1,2-DICHLOROETHENE	2.59 UJ	2.86 UJ	2.54 UJ	2.41 U	2.52 UJ	2.21 UJ	2.51 UJ	2.39 UJ	2.51 UJ	2.31 U	2.07 U
CIS-1,3-DICHLOROPROPENE											
CYCLOHEXANE											
DIBROMOMETHANE											
DICHLORODIFLUOROMETHANE											
ETHYL METHACRYLATE											
ETHYLBENZENE											
ISOBUTANOL											
ISOPROPYLBENZENE											
METHACRYLONITRILE											
METHYL ACETATE											
METHYL IODIDE											
METHYL METHACRYLATE											
METHYL TERT-BUTYL ETHER											
METHYLENE CHLORIDE											
PROPIONITRILE											
STYRENE											
TETRACHLOROETHENE	2.59 U	2.86 U	2.54 U	2.41 U	2.52 U	2.21 U	2.51 UJ	2.39 U	2.51 U	2.31 U	2.07 U
TOLUENE											
TOTAL XYLENES											
TRANS-1,2-DICHLOROETHENE	2.59 U	2.86 U	2.54 U	2.41 U	2.52 U	2.21 U	2.51 UJ	2.39 U	2.51 U	2.31 U	2.07 U
TRANS-1,3-DICHLOROPROPENE											
TRANS-1,4-DICHLORO-2-BUTENE											
TRICHLOROETHENE	3.49 J	2.86 U	30.1	37.5	3.36 J	1.62 J	21.1 J	2.39 U	2.51 U	2.31 U	2.07 U
TRICHLOROFLUOROMETHANE											
VINYL ACETATE											
VINYL CHLORIDE	2.59 U	2.86 U	2.54 U	2.41 UJ	2.52 U	2.21 U	2.51 UJ	2.39 U	3.17 J	2.31 U	2.07 U

TABLE A-1

SURFACE SOIL SAMPLE DATA
SWMU 16
NSA CRANE
CRANE, INDIANA

LOCATION	**16SB237**	**16SB238**	**16SB239**	**16SB240**	**16SB241**
SAMPLE ID	**16SS2370002**	**16SS2380002**	**16SS2390002**	**16SS2400002**	**16SS2410002**
SAMPLE DATE	**20121130**	**20121130**	**20121130**	**20121130**	**20121130**
ROUND					
EVENT					
SAMPLE CODE	**NORMAL**	**NORMAL**	**NORMAL**	**NORMAL**	**NORMAL**
MATRIX	**SO**	**SO**	**SO**	**SO**	**SO**
SAMPLE TYPE	**NORMAL**	**NORMAL**	**NORMAL**	**NORMAL**	**NORMAL**
SUBMATRIX	**SS**	**SS**	**SS**	**SS**	**SS**
TOP DEPTH	**0**	**0**	**0**	**0**	**0**
BOTTOM DEPTH	**2**	**2**	**2**	**2**	**2**
DIOXINS/FURANS (NG/KG)					
1,2,3,4,6,7,8,9-OCDD					
1,2,3,4,6,7,8,9-OCDF					
1,2,3,4,6,7,8-HPCDD					
1,2,3,4,6,7,8-HPCDF					
1,2,3,4,7,8,9-HPCDF					
1,2,3,4,7,8-HXCDD					
1,2,3,4,7,8-HXCDF					
1,2,3,6,7,8-HXCDD					
1,2,3,6,7,8-HXCDF					
1,2,3,7,8,9-HXCDD					
1,2,3,7,8,9-HXCDF					
1,2,3,7,8-PECDD					
1,2,3,7,8-PECDF					
2,3,4,6,7,8-HXCDF					
2,3,4,7,8-PECDF					
2,3,7,8-TCDD					
2,3,7,8-TCDF					
TEQ BIRD					
TEQ BIRD HALFND					
TEQ MAMMAL					
TEQ MAMMAL HALFND					
TEQ WHO-2007					
TEQ WHO-2007 - HALFND					
TOTAL HPCDD					
TOTAL HPCDF					
TOTAL HXCDD					
TOTAL HXCDF					
TOTAL PECDD					
TOTAL PECDF					
TOTAL TCDD					
TOTAL TCDF					
EXPLOSIVES (MG/KG)					
1,3,5-TRINITROBENZENE					
1,3-DINITROBENZENE					
2,4,6-TRINITROTOLUENE					
2,4-DINITROTOLUENE					
2,6-DINITROTOLUENE					
2-AMINO-4,6-DINITROTOLUENE					
2-NITROTOLUENE					
3-NITROTOLUENE					
4-AMINO-2,6-DINITROTOLUENE					
4-NITROTOLUENE					
HMX					
NITROBENZENE					
PICRAMIC ACID					
PICRIC ACID					
RDX					
TETRYL					

TABLE A-1

SURFACE SOIL SAMPLE DATA
SWMU 16
NSA CRANE
CRANE, INDIANA

LOCATION	16SB237	16SB238	16SB239	16SB240	16SB241
SAMPLE ID	16SS2370002	16SS2380002	16SS2390002	16SS2400002	16SS2410002
SAMPLE DATE	20121130	20121130	20121130	20121130	20121130
ROUND					
EVENT					
SAMPLE CODE	NORMAL	NORMAL	NORMAL	NORMAL	NORMAL
MATRIX	SO	SO	SO	SO	SO
SAMPLE TYPE	NORMAL	NORMAL	NORMAL	NORMAL	NORMAL
SUBMATRIX	SS	SS	SS	SS	SS
TOP DEPTH	0	0	0	0	0
BOTTOM DEPTH	2	2	2	2	2
HERBICIDES (UG/KG)					
HEXACHLOROPHENE					
PENTACHLOROPHENOL					
METALS (MG/KG)					
ALUMINUM					
ANTIMONY					
ARSENIC					
BARIUM					
BERYLLIUM					
CADMIUM					
CALCIUM					
CHROMIUM					
COBALT					
COPPER					
IRON					
LEAD					
LITHIUM					
MAGNESIUM					
MANGANESE					
MERCURY					
NICKEL					
POTASSIUM					
SELENIUM					
SILVER					
SODIUM					
STRONTIUM					
THALLIUM					
TIN					
TITANIUM					
VANADIUM					
ZINC					
METALS (UG/KG)					
LEAD					
MISCELLANEOUS PARAMETERS (%)					
PERCENT MOISTURE					
MISCELLANEOUS PARAMETERS (MEQ/100)					
CATION EXCHANGE CAPACITY					
MISCELLANEOUS PARAMETERS (MG/KG)					
TOTAL ORGANIC CARBON					
MISCELLANEOUS PARAMETERS (S.U.)					
PH					
PESTICIDES/PCBS (UG/KG)					
AROCLOR-1016					
AROCLOR-1221					
AROCLOR-1232					
AROCLOR-1242					
AROCLOR-1248					
AROCLOR-1254					
AROCLOR-1260					

TABLE A-1

SURFACE SOIL SAMPLE DATA
SWMU 16
NSA CRANE
CRANE, INDIANA

LOCATION	**16SB237**	**16SB238**	**16SB239**	**16SB240**	**16SB241**
SAMPLE ID	**16SS2370002**	**16SS2380002**	**16SS2390002**	**16SS2400002**	**16SS2410002**
SAMPLE DATE	**20121130**	**20121130**	**20121130**	**20121130**	**20121130**
ROUND					
EVENT					
SAMPLE CODE	**NORMAL**	**NORMAL**	**NORMAL**	**NORMAL**	**NORMAL**
MATRIX	**SO**	**SO**	**SO**	**SO**	**SO**
SAMPLE TYPE	**NORMAL**	**NORMAL**	**NORMAL**	**NORMAL**	**NORMAL**
SUBMATRIX	**SS**	**SS**	**SS**	**SS**	**SS**
TOP DEPTH	**0**	**0**	**0**	**0**	**0**
BOTTOM DEPTH	**2**	**2**	**2**	**2**	**2**
PETROLEUM HYDROCARBONS (UG/KG)					
DRO (C08-C28)					
TPH (C06-C12)					
SEMIVOLATILES (UG/KG)					
1,2,4,5-TETRACHLOROBENZENE					
1,2,4-TRICHLOROBENZENE					
1,2-DICHLOROBENZENE					
1,3-DICHLOROBENZENE					
1,4-DICHLOROBENZENE					
1,4-NAPHTHOQUINONE					
1,4-PHENYLENEDIAMINE					
1-NAPHTHYLAMINE					
2,2'-OXYBIS(1-CHLOROPROPANE)					
2,3,4,6-TETRACHLOROPHENOL					
2,4,5-TRICHLOROPHENOL					
2,4,6-TRICHLOROPHENOL					
2,4-DICHLOROPHENOL					
2,4-DIMETHYLPHENOL					
2,4-DINITROPHENOL					
2,6-DICHLOROPHENOL					
2-ACETYLAMINOFLUORENE					
2-CHLORONAPHTHALENE					
2-CHLOROPHENOL					
2-METHYLNAPHTHALENE					
2-METHYLPHENOL					
2-NAPHTHYLAMINE					
2-NITROANILINE					
2-NITROPHENOL					
2-PICOLINE					
3&4-METHYLPHENOL					
3,3'-DICHLOROBENZIDINE					
3,3'-DIMETHYLBENZIDINE					
3-METHYLCHOLANTHRENE					
3-NITROANILINE					
4,6-DINITRO-2-METHYLPHENOL					
4-AMINOBIPHENYL					
4-BROMOPHENYL PHENYL ETHER					
4-CHLORO-3-METHYLPHENOL					
4-CHLOROANILINE					
4-CHLOROPHENYL PHENYL ETHER					
4-NITROANILINE					
4-NITROPHENOL					
4-NITROQUINOLINE-1-OXIDE					
5-NITRO-O-TOLUIDINE					
7,12-DIMETHYLBENZ(A)ANTHRACENE					
A,A-DIMETHYLPHENETHYLAMINE					
ACENAPHTHENE					
ACENAPHTHYLENE					
ACETOPHENONE					

TABLE A-1

SURFACE SOIL SAMPLE DATA
SWMU 16
NSA CRANE
CRANE, INDIANA

LOCATION	**16SB237**	**16SB238**	**16SB239**	**16SB240**	**16SB241**
SAMPLE ID	**16SS2370002**	**16SS2380002**	**16SS2390002**	**16SS2400002**	**16SS2410002**
SAMPLE DATE	**20121130**	**20121130**	**20121130**	**20121130**	**20121130**
ROUND					
EVENT					
SAMPLE CODE	**NORMAL**	**NORMAL**	**NORMAL**	**NORMAL**	**NORMAL**
MATRIX	**SO**	**SO**	**SO**	**SO**	**SO**
SAMPLE TYPE	**NORMAL**	**NORMAL**	**NORMAL**	**NORMAL**	**NORMAL**
SUBMATRIX	**SS**	**SS**	**SS**	**SS**	**SS**
TOP DEPTH	**0**	**0**	**0**	**0**	**0**
BOTTOM DEPTH	**2**	**2**	**2**	**2**	**2**
ANILINE					
ANTHRACENE					
ARAMITE					
BENZO(A)ANTHRACENE					
BENZO(A)PYRENE					
BENZO(B)FLUORANTHENE					
BENZO(G,H,I)PERYLENE					
BENZO(K)FLUORANTHENE					
BENZYL ALCOHOL					
BIS(2-CHLOROETHOXY)METHANE					
BIS(2-CHLOROETHYL)ETHER					
BIS(2-ETHYLHEXYL)PHTHALATE					
BUTYL BENZYL PHTHALATE					
CHLOROBENZILATE					
CHRYSENE					
DIALLATE					
DIBENZO(A,H)ANTHRACENE					
DIBENZOFURAN					
DIETHYL PHTHALATE					
DIMETHYL PHTHALATE					
DI-N-BUTYL PHTHALATE					
DI-N-OCTYL PHTHALATE					
DIPHENYLAMINE					
ETHYL METHANE SULFONATE					
FLUORANTHENE					
FLUORENE					
HEXACHLOROBENZENE					
HEXACHLOROBUTADIENE					
HEXACHLOROCYCLOPENTADIENE					
HEXACHLOROETHANE					
HEXACHLOROPROPENE					
INDENO(1,2,3-CD)PYRENE					
ISODRIN					
ISOPHORONE					
ISOSAFROLE					
KEPONE					
METHAPYRILENE					
METHYL METHANE SULFONATE					
NAPHTHALENE					
N-NITROSODIETHYLAMINE					
N-NITROSODIMETHYLAMINE					
N-NITROSO-DI-N-BUTYLAMINE					
N-NITROSO-DI-N-PROPYLAMINE					
N-NITROSOMETHYLETHYLAMINE					
N-NITROSOMORPHOLINE					
N-NITROSOPIPERIDINE					
N-NITROSOPYRROLIDINE					
O,O,O-TRIETHYL PHOSPHOROTHIOATE					
O-TOLUIDINE					

TABLE A-1

SURFACE SOIL SAMPLE DATA
SWMU 16
NSA CRANE
CRANE, INDIANA

LOCATION	**16SB237**	**16SB238**	**16SB239**	**16SB240**	**16SB241**
SAMPLE ID	**16SS2370002**	**16SS2380002**	**16SS2390002**	**16SS2400002**	**16SS2410002**
SAMPLE DATE	**20121130**	**20121130**	**20121130**	**20121130**	**20121130**
ROUND					
EVENT					
SAMPLE CODE	**NORMAL**	**NORMAL**	**NORMAL**	**NORMAL**	**NORMAL**
MATRIX	**SO**	**SO**	**SO**	**SO**	**SO**
SAMPLE TYPE	**NORMAL**	**NORMAL**	**NORMAL**	**NORMAL**	**NORMAL**
SUBMATRIX	**SS**	**SS**	**SS**	**SS**	**SS**
TOP DEPTH	**0**	**0**	**0**	**0**	**0**
BOTTOM DEPTH	**2**	**2**	**2**	**2**	**2**
PENTACHLOROBENZENE					
PENTACHLOROETHANE					
PENTACHLORONITROBENZENE					
PHENACETIN					
PHENANTHRENE					
PHENOL					
PRONAMIDE					
PYRENE					
PYRIDINE					
SAFROLE					
SOLVENT YELLOW 2					
VOLATILES (UG/KG)					
1,1,1,2-TETRACHLOROETHANE					
1,1,1-TRICHLOROETHANE					
1,1,2,2-TETRACHLOROETHANE					
1,1,2-TRICHLOROETHANE	2.64 U	2.35 U	2.29 U	2.23 U	2.04 U
1,1,2-TRICHLOROTRIFLUOROETHANE					
1,1-DICHLOROETHANE					
1,1-DICHLOROETHENE					
1,2,3-TRICHLOROBENZENE					
1,2,3-TRICHLOROPROPANE					
1,2,4-TRICHLOROBENZENE					
1,2-DIBROMO-3-CHLOROPROPANE					
1,2-DIBROMOETHANE					
1,2-DICHLOROBENZENE					
1,2-DICHLOROETHANE					
1,2-DICHLOROPROPANE					
1,3-DICHLOROBENZENE					
1,4-DICHLOROBENZENE					
1,4-DIOXANE					
2-BUTANONE					
2-HEXANONE					
3-CHLOROPROPENE					
4-METHYL-2-PENTANONE					
ACETONE					
ACETONITRILE					
ACROLEIN					
ACRYLONITRILE					
BENZENE					
BROMODICHLOROMETHANE					
BROMOFORM					
BROMOMETHANE					
CARBON DISULFIDE					
CARBON TETRACHLORIDE	2.64 U	2.35 U	2.29 U	2.23 U	2.04 U
CHLOROBENZENE					
CHLORODIBROMOMETHANE					
CHLOROETHANE					
CHLOROFORM					
CHLOROMETHANE					

TABLE A-1

SURFACE SOIL SAMPLE DATA
SWMU 16
NSA CRANE
CRANE, INDIANA

LOCATION	**16SB237**	**16SB238**	**16SB239**	**16SB240**	**16SB241**
SAMPLE ID	**16SS2370002**	**16SS2380002**	**16SS2390002**	**16SS2400002**	**16SS2410002**
SAMPLE DATE	**20121130**	**20121130**	**20121130**	**20121130**	**20121130**
ROUND					
EVENT					
SAMPLE CODE	**NORMAL**	**NORMAL**	**NORMAL**	**NORMAL**	**NORMAL**
MATRIX	**SO**	**SO**	**SO**	**SO**	**SO**
SAMPLE TYPE	**NORMAL**	**NORMAL**	**NORMAL**	**NORMAL**	**NORMAL**
SUBMATRIX	**SS**	**SS**	**SS**	**SS**	**SS**
TOP DEPTH	**0**	**0**	**0**	**0**	**0**
BOTTOM DEPTH	**2**	**2**	**2**	**2**	**2**
CHLOROPRENE					
CIS-1,2-DICHLOROETHENE	2.64 U	2.35 U	2.29 U	2.23 U	2.04 U
CIS-1,3-DICHLOROPROPENE					
CYCLOHEXANE					
DIBROMOMETHANE					
DICHLORODIFLUOROMETHANE					
ETHYL METHACRYLATE					
ETHYLBENZENE					
ISOBUTANOL					
ISOPROPYLBENZENE					
METHACRYLONITRILE					
METHYL ACETATE					
METHYL IODIDE					
METHYL METHACRYLATE					
METHYL TERT-BUTYL ETHER					
METHYLENE CHLORIDE					
PROPIONITRILE					
STYRENE					
TETRACHLOROETHENE	2.64 U	2.35 U	2.29 U	2.23 U	2.04 U
TOLUENE					
TOTAL XYLENES					
TRANS-1,2-DICHLOROETHENE	2.64 U	2.35 U	2.29 U	2.23 U	2.04 U
TRANS-1,3-DICHLOROPROPENE					
TRANS-1,4-DICHLORO-2-BUTENE					
TRICHLOROETHENE	2.64 U	2.35 U	2.29 U	2.23 U	2.04 U
TRICHLOROFLUOROMETHANE					
VINYL ACETATE					
VINYL CHLORIDE	2.64 U	2.35 U	2.29 U	2.23 U	2.04 U

TABLE A-2

SUBSURFACE SOIL SAMPLE DATA
SWMU 16
NSA CRANE
CRANE, INDIANA

LOCATION	16SB001	16SB002	16SB036	16SB038	16SB039	16SB040	16SB040	16SB040	16SB041	16SB041	16SB047	16SB048	16SB049
SAMPLE ID	16SB0010406	16SB0020406	16SB0360203	16SB0380203	16SB0390203	16SB0400506	16SB0400608	16SB0400608-D	16SB0410305	16SB0410507	16SB0470405	16SB0480203	16SB0490405
SAMPLE DATE	20030327	20030327	20030409	20030328	20030328	20030328	20030328	20030328	20030327	20030327	20031205	20031205	20031205
ROUND	01	01	01	01	01	01	01	01	01	01	02	02	02
EVENT													
SAMPLE CODE	NORMAL	NORMAL	NORMAL	NORMAL	NORMAL	NORMAL	NORMAL	DUP	NORMAL	NORMAL	NORMAL	NORMAL	NORMAL
MATRIX	SO	SO	SO	SO	SO	SO	SO	SO	SO	SO	SO	SO	SO
SAMPLE TYPE	NORMAL	NORMAL	NORMAL	NORMAL	NORMAL	NORMAL	NORMAL	NORMAL	NORMAL	NORMAL	NORMAL	NORMAL	NORMAL
SUBMATRIX	SB	SB	SB	SB	SB	SB	SB	SB	SB	SB	SB	SB	SB
TOP DEPTH	4	4	2	2	2	5	6	6	3	5	4	2	4
BOTTOM DEPTH	6	6	3	3	3	6	8	8	5	7	5	3	5
EXPLOSIVES (MG/KG)													
1,3,5-TRINITROBENZENE	0.25 U	0.25 U	0.25 U	0.25 U	0.25 U	0.25 U	0.25 U	0.25 U	0.25 U	0.25 U			
1,3-DINITROBENZENE	0.25 U	0.25 U	0.25 U	0.25 U	0.25 U	0.25 U	0.25 U	0.25 U	0.25 U	0.25 U			
2,4,6-TRINITROTOLUENE	0.25 U	0.25 U	0.25 U	0.25 U	0.25 U	0.25 U	0.25 U	0.25 U	0.25 U	0.25 U			
2,4-DINITROTOLUENE	0.25 U	0.25 U	0.25 U	0.25 U	0.25 U	0.25 U	0.25 U	0.25 U	0.25 U	0.25 U			
2,6-DINITROTOLUENE	0.25 U	0.25 U	0.25 U	0.25 U	0.25 U	0.25 U	0.25 U	0.25 U	0.25 U	0.25 U			
2-AMINO-4,6-DINITROTOLUENE	0.25 U	0.25 U	0.25 U	0.25 U	0.25 U	0.25 U	0.25 U	0.25 U	0.25 U	0.25 U			
2-NITROTOLUENE	0.25 U	0.25 U	0.25 U	0.25 U	0.25 U	0.25 U	0.25 U	0.25 U	0.25 U	0.25 U			
3-NITROTOLUENE	0.25 U	0.25 U	0.25 U	0.25 U	0.25 U	0.25 U	0.25 U	0.25 U	0.25 U	0.25 U			
4-AMINO-2,6-DINITROTOLUENE	0.25 U	0.25 U	0.25 U	0.25 U	0.25 U	0.25 U	0.25 U	0.25 U	0.25 U	0.25 U			
4-NITROTOLUENE	0.25 U	0.25 U	0.25 U	0.25 U	0.25 U	0.25 U	0.25 U	0.25 U	0.25 U	0.25 U			
HMX	0.25 U	0.25 U	0.25 U	0.25 U	0.25 U	0.25 U	0.25 U	0.25 U	0.25 U	0.25 U			
NITROBENZENE	0.25 U	0.25 U	0.25 U	0.25 U	0.25 U	0.25 U	0.25 U	0.25 U	0.25 U	0.25 U			
PICRAMIC ACID	0.020 U	0.019 U	0.019 U	0.019 U	0.020 U	0.020 U	0.020 U	0.020 U	0.02 U	0.02 U			
PICRIC ACID	0.020 UJ	0.019 U	0.019 U	0.019 U	0.020 U	0.020 U	0.020 U	0.020 U	0.02 U	0.02 U			
RDX	0.25 U	0.25 U	0.25 U	0.25 U	0.25 U	0.25 U	0.25 U	0.25 U	0.25 U	0.25 U			
TETRYL	0.25 U	0.25 U	0.25 U	0.25 U	0.25 U	0.25 U	0.25 U	0.25 U	0.25 U	0.25 U			
HERBICIDES (UG/KG)													
HEXACHLOROPHENE	1 U	0.68 U	0.98 U	0.96 U	1 U	1 U	1 U	1 U	0.73 U	0.74 U			
PENTACHLOROPHENOL	0.54 U	0.51 U	0.52 U	0.51 U	0.55 U	0.54 U	0.54 U	0.55 U	0.55 U	0.56 U			
METALS (MG/KG)													
ALUMINUM	8090 J	13800 J	7450 J	4530 J	12600 J	9140 J	8330 J	11300 J	18600 J	11800 J			
ANTIMONY	0.52 U	0.31 U	0.62 J	0.40 U	1.5 U	0.54 U	0.57 U	0.74 U	0.75 U	0.33 U			
ARSENIC	2.7 J	3.2 J	2.6 J	2.4 J	7.9 J	5.7 J	4.6 J	7.2 J	6.0 J	9.4 J			
BARIUM	20.6 J	76.3 J	45.3 J	26.7 J	58.2 J	58.2 J	72.2 J	68.6 J	76.8 J	36.5 J			
BERYLLIUM	0.38 U	0.50 J	0.37 J	0.25 U	0.39 U	0.35 U	0.42 U	0.44 U	0.47 J	0.34 J			
CADMIUM	0.16 U	0.18 U	0.24 J	0.19 U	0.28 U	0.21 U	0.22 U	0.27 U	0.27 U	0.25 U			
CALCIUM	468 J	602 J	408 J	192 U	528 J	601 J	1130 J	1740 J	1540 J	586 J			
CHROMIUM	11.9 J	17.8 J	10.9 J	10.0 J	14.5 J	13.5 J	11.4 J	14.7 J	20.0 J	21.8 J			
COBALT	1.7 J	2.2 J	1.8 J	1.5 J	6.7 J	7.1 J	7.9 J	7.2 J	4.4 J	4.0 J			
COPPER	6.7 J	6.7 J	15.5 J	5.5 J	13.7 J	8.7 J	17.2 J	12.5 J	11.5 J	7.0 J			
IRON	14800 J	15100 J	13300 J	12800 J	23900 J	17900 J	13600 J	22100 J	20800 J	30300 J			
LEAD	6.0 J	7.2 J	34.0 J	6.9 J	11.6 J	14.1 J	12.3 J	12.6 J	9.7 J	8.6 J			
LITHIUM	5.9 U	11.8 J	4.6 J	4.3 J	9.7 J	7.9 J	7.3 J	9.7 J	13.5 J	8.4 J			
MAGNESIUM	939 J	1070 J	710 J	593 J	2000 J	1100 J	1010 J	1550 J	2620 J	1290 J			
MANGANESE	28.8 J	10.0 J	15.6 J	24.7 J	415 J	314 J	229 J	443 J	298 J	167 J			
MERCURY	0.012 U	0.023 J	0.003 J	0.002 U	0.047 J	0.032 J	0.026 J	0.060 J	0.058 J	0.020 J			
NICKEL	4.8 J	6.8 J	4.3 J	3.8 J	11.0 J	7.6 J	8.4 J	9.9 J	11.5 J	6.5 J			
POTASSIUM	245 J	621 J	285 J	225 J	610 J	429 J	448 J	635 J	1550 J	810 J			
SELENIUM	0.06 U	0.11 U	0.05 U	0.06 U	0.31 U	0.36 U	0.30 U	0.42 U	0.28 U	0.26 U			
SILVER	0.11 U	0.03 U	0.08 U	0.02 U	0.05 U	0.05 U	0.07 U	0.03 U	0.04 U	0.03 U			
SODIUM	70.8 U	75.8 U	27.1 U	27.9 U	44.2 U	19.9 U	38.2 U	38.6 U	69.4 U	62.0 U			
STRONTIUM	4.9 J	13.6 J	16.6 J	4.0 J	8.2 J	7.3 J	9.4 J	15.7 J	17.1 J	8.0 J			
THALLIUM	0.10 U	0.14 U	0.10 U	0.08 U	0.15 U	0.13 U	0.14 U	0.16 U	0.22 U	0.14 U			
TIN	0.67 U	0.57 U	0.46 J	0.30 U	0.66 U	0.49 U	0.50 U	0.59 U	0.55 U	0.49 U			
TITANIUM	75.9 J	58.5 J	42.2 J	30.1 J	99.3 J	82.0 J	70.3 J	123 J	177 J	173 J			
VANADIUM	17.5 J	24.0 J	14.5 J	12.1 J	24.3 J	20.1 J	17.7 J	25.1 J	33.9 J	32.4 J			
ZINC	10.2 J	11.8 U	83.3 J	11.6 U	39.7 U	26.7 U	33.3 U	34.2 U	31.8 J	17.6 J			
METALS (UG/KG)													
LEAD													
MISCELLANEOUS PARAMETERS (%)													
PERCENT MOISTURE													
MISCELLANEOUS PARAMETERS (MEQ/100)													
CATION EXCHANGE CAPACITY		24							22	15			
MISCELLANEOUS PARAMETERS (MG/KG)													
TOTAL ORGANIC CARBON		3400 J							1400 J	3400 J			
MISCELLANEOUS PARAMETERS (S.U.)													
PH		5							7.5	5.3			
PESTICIDES/PCBS (UG/KG)													
AROCLOR-1016	20 U	19 U		19 U	21 U								
AROCLOR-1221	40 U	39 U		38 U	42 U								
AROCLOR-1232	20 U	19 U		19 U	21 U								
AROCLOR-1242	20 U	19 U		19 U	21 U								
AROCLOR-1248	20 U	19 U		19 U	21 U								
AROCLOR-1254	20 U	19 U		19 U	21 U								
AROCLOR-1260	20 U	19 U		19 U	21 U								

TABLE A-2

SUBSURFACE SOIL SAMPLE DATA
SWMU 16
NSA CRANE
CRANE, INDIANA

LOCATION	16SB001	16SB002	16SB036	16SB038	16SB039	16SB040	16SB040	16SB040	16SB041	16SB041	16SB047	16SB048	16SB049
SAMPLE ID	16SB0010406	16SB0020406	16SB0360203	16SB0380203	16SB0390203	16SB0400506	16SB0400608	16SB0400608-D	16SB0410305	16SB0410507	16SB0470405	16SB0480203	16SB0490405
SAMPLE DATE	20030327	20030327	20030409	20030328	20030328	20030328	20030328	20030328	20030327	20030327	20031205	20031205	20031205
ROUND	01	01	01	01	01	01	01	01	01	01	02	02	02
EVENT													
SAMPLE CODE	NORMAL	NORMAL	NORMAL	NORMAL	NORMAL	NORMAL	NORMAL	DUP	NORMAL	NORMAL	NORMAL	NORMAL	NORMAL
MATRIX	SO	SO	SO	SO	SO	SO	SO	SO	SO	SO	SO	SO	SO
SAMPLE TYPE	NORMAL	NORMAL	NORMAL	NORMAL	NORMAL	NORMAL	NORMAL	NORMAL	NORMAL	NORMAL	NORMAL	NORMAL	NORMAL
SUBMATRIX	SB	SB	SB	SB	SB	SB	SB	SB	SB	SB	SB	SB	SB
TOP DEPTH	4	4	2	2	2	5	6	6	3	5	4	2	4
BOTTOM DEPTH	6	6	3	3	3	6	8	8	5	7	5	3	5
PETROLEUM HYDROCARBONS (UG/KG)													
DRO (C08-C28)													
TPH (C06-C12)													
SEMIVOLATILES (UG/KG)													
1,2,4,5-TETRACHLOROBENZENE	80 U	76 U	77 U	75 U	82 U	80 U	80 U	81 U	81 U	83 U			
1,2,4-TRICHLOROBENZENE	80 U	76 U	77 U	75 U	82 U	80 U	80 U	81 U	81 U	83 U			
1,2-DICHLOROBENZENE	80 U	76 U	77 U	75 U	82 U	80 U	80 U	81 U	81 U	83 U			
1,3-DICHLOROBENZENE	80 U	76 U	77 U	75 U	82 U	80 U	80 U	81 U	81 U	83 U			
1,4-DICHLOROBENZENE	80 U	76 U	77 U	75 U	82 U	80 U	80 U	81 U	81 U	83 U			
1,4-NAPHTHOQUINONE	80 U	76 U	77 U	75 U	82 U	80 U	80 U	81 U	81 U	83 U			
1,4-PHENYLENEDIAMINE	80 UJ	76 UJ	77 UJ	75 UR	82 UR	80 UR	80 UR	81 UR	81 UJ	83 UJ			
1-NAPHTHYLAMINE	80 U	76 U	77 U	75 U	82 U	80 U	80 U	81 U	81 U	83 U			
2,2'-OXYBIS(1-CHLOROPROPANE)	80 U	76 U	77 U	75 U	82 U	80 U	80 U	81 U	81 U	83 U			
2,3,4,6-TETRACHLOROPHENOL	80 U	76 U	77 U	75 U	82 U	80 U	80 U	81 U	81 U	83 U			
2,4,5-TRICHLOROPHENOL	80 U	76 U	77 U	75 U	82 U	80 U	80 U	81 U	81 U	83 U			
2,4,6-TRICHLOROPHENOL	80 U	76 U	77 U	75 U	82 U	80 U	80 U	81 U	81 U	83 U			
2,4-DICHLOROPHENOL	80 U	76 U	77 U	75 U	82 U	80 U	80 U	81 U	81 U	83 U			
2,4-DIMETHYLPHENOL	80 U	76 U	77 U	75 U	82 U	80 U	80 U	81 U	81 U	83 U			
2,4-DINITROPHENOL	80 U	76 U	77 U	75 UJ	82 UJ	80 UJ	80 UJ	81 UJ	81 U	83 U			
2,6-DICHLOROPHENOL	80 U	76 U	77 U	75 U	82 U	80 U	80 U	81 U	81 U	83 U			
2-ACETYLAMINOFLUORENE	80 U	76 U	77 U	75 U	82 U	80 U	80 U	81 U	81 U	83 U			
2-CHLORONAPHTHALENE	80 UJ	76 UJ	77 U	75 U	82 U	80 U	80 U	81 U	81 U	83 U			
2-CHLOROPHENOL	80 U	76 U	77 U	75 U	82 U	80 U	80 U	81 U	81 U	83 U			
2-METHYLNAPHTHALENE	3.9 U	3.7 U	3.8 U	3.7 U	4.1 U	3.9 U	3.9 U	4 U	4 U	4 J			
2-METHYLPHENOL	80 U	76 U	77 U	75 U	82 U	80 U	80 U	81 U	81 U	83 U			
2-NAPHTHYLAMINE	80 U	76 U	77 U	75 U	82 U	80 U	80 U	81 U	81 U	83 U			
2-NITROANILINE	80 U	76 U	77 U	75 U	82 U	80 U	80 U	81 U	81 U	83 U			
2-NITROPHENOL	80 U	76 U	77 U	75 U	82 U	80 U	80 U	81 U	81 U	83 U			
2-PICOLINE	80 U	76 U	77 U	75 U	82 U	80 U	80 U	81 U	81 U	83 U			
3&4-METHYLPHENOL	80 U	76 U	77 U	75 U	82 U	80 U	80 U	81 U	81 U	83 U			
3,3'-DICHLOROBENZIDINE	80 U	76 U	77 U	75 U	82 U	80 U	80 U	81 U	81 U	83 U			
3,3'-DIMETHYLBENZIDINE	80 U	76 U	77 U	75 U	82 U	80 U	80 U	81 U	81 U	83 U			
3-METHYLCHOLANTHRENE	80 U	76 U	77 U	75 U	82 U	80 U	80 U	81 U	81 U	83 U			
3-NITROANILINE	80 U	76 U	77 U	75 U	82 U	80 U	80 U	81 U	81 U	83 U			
4,6-DINITRO-2-METHYLPHENOL	80 U	76 U	77 U	75 U	82 U	80 U	80 U	81 U	81 U	83 U			
4-AMINOBIPHENYL	80 U	76 U	77 U	75 U	82 U	80 U	80 U	81 U	81 U	83 U			
4-BROMOPHENYL PHENYL ETHER	80 U	76 U	77 U	75 U	82 U	80 U	80 U	81 U	81 U	83 U			
4-CHLORO-3-METHYLPHENOL	80 U	76 U	77 U	75 U	82 U	80 U	80 U	81 U	81 U	83 U			
4-CHLOROANILINE	80 U	76 U	77 U	75 U	82 U	80 U	80 U	81 U	81 U	83 U			
4-CHLOROPHENYL PHENYL ETHER	80 U	76 U	77 U	75 U	82 U	80 U	80 U	81 U	81 U	83 U			
4-NITROANILINE	80 U	76 U	77 U	75 U	82 U	80 U	80 U	81 U	81 U	83 U			
4-NITROPHENOL	80 U	76 U	77 U	75 U	82 U	80 U	80 U	81 U	81 U	83 U			
4-NITROQUINOLINE-1-OXIDE	80 UR	76 UR	77 UR	75 UR	82 UR	80 UR	80 UR	81 UR	81 UR	83 UR			
5-NITRO-O-TOLUIDINE	80 U	76 U	77 U	75 UJ	82 UJ	80 U	80 U	81 U	81 U	83 U			
7,12-DIMETHYLBENZ(A)ANTHRACENE	80 U	76 U	77 U	75 U	82 U	80 U	80 U	81 U	81 U	83 U			
A,A-DIMETHYLPHENETHYLAMINE	80 UJ	76 UJ	77 UJ	75 UJ	82 UJ	80 U	80 U	81 U	81 UJ	83 UJ			
ACENAPHTHENE	3.9 U	3.7 U	3.8 U	3.7 U	4.1 U	3.9 U	3.9 U	4 U	4 U	4.1 U			
ACENAPHTHYLENE	3.9 U	3.7 U	3.8 U	3.7 U	4.1 U	3.9 U	3.9 U	4 U	4 U	4.1 U			
ACETOPHENONE	80 U	76 U	77 U	75 U	82 U	80 U	80 U	81 U	81 U	83 U			
ANILINE	80 U	76 U	77 U	75 U	82 U	80 U	80 U	81 U	81 U	83 U			
ANTHRACENE	3.9 U	3.7 U	3.8 U	3.7 U	4.1 U	3.9 U	3.9 U	4 U	4 U	4.1 U			
ARAMITE	80 UR	76 UR	77 UR	75 U	82 U	80 U	80 U	81 U	81 UR	83 UR			
BENZO(A)ANTHRACENE	3.9 U	3.7 U	3.8 U	3.7 U	4.1 U	3.9 U	3.9 U	4 U	4 U	4.1 U			
BENZO(A)PYRENE	3.9 U	3.7 U	3.8 U	3.7 U	4.1 U	3.9 U	3.9 U	4 U	4 U	4.1 U			
BENZO(B)FLUORANTHENE	3.9 U	3.7 U	3.8 UJ	3.7 U	4.1 U	3.9 U	3.9 U	4 U	4 U	4.1 U			
BENZO(G,H,I)PERYLENE	3.9 U	3.7 U	3.8 U	3.7 U	4.1 U	3.9 U	3.9 U	4 U	4 U	4.1 U			
BENZO(K)FLUORANTHENE	3.9 U	3.7 U	3.8 U	3.7 U	4.1 U	3.9 U	3.9 U	4 U	4 U	4.1 U			
BENZYL ALCOHOL	80 U	76 U	77 U	75 UJ	82 UJ	80 UJ	80 UJ	81 UJ	81 U	83 U			
BIS(2-CHLOROETHOXY)METHANE	80 U	76 U	77 U	75 U	82 U	80 U	80 U	81 U	81 U	83 U			
BIS(2-CHLOROETHYL)ETHER	80 U	76 U	77 U	75 U	82 U	80 U	80 U	81 U	81 U	83 U			
BIS(2-ETHYLHEXYL)PHTHALATE	80 U	130 J	110 BU	150 BU	1000 BU	1400 BJ	660 BU	350 BU	81 U	86 J			
BUTYL BENZYL PHTHALATE	80 U	76 U	77 U	75 U	82 U	80 U	80 U	81 U	81 U	83 U			
CHLOROBENZILATE	80 U	76 U	77 U	75 U	82 U	80 U	80 U	81 U	81 U	83 U			
CHRYSENE	3.9 U	3.7 U	3.8 U	3.7 U	4.1 U	3.9 U	3.9 U	4 U	4 U	8			
DIALLATE	80 U	76 U	77 U	75 U	82 U	80 U	80 U	81 U	81 U	83 U			
DIBENZO(A,H)ANTHRACENE	3.9 U	3.7 U	3.8 U	3.7 U	4.1 U	3.9 U	3.9 U	4 U	4 U	4.1 U			
DIBENZOFURAN	80 U	76 U	77 U	75 U	82 U	80 U	80 U	81 U	81 U	83 U			

TABLE A-2

SUBSURFACE SOIL SAMPLE DATA
SWMU 16
NSA CRANE
CRANE, INDIANA

LOCATION	16SB001	16SB002	16SB036	16SB038	16SB039	16SB040	16SB040	16SB040	16SB041	16SB041	16SB047	16SB048	16SB049
SAMPLE ID	16SB0010406	16SB0020406	16SB0360203	16SB0380203	16SB0390203	16SB0400506	16SB0400608	16SB0400608-D	16SB0410305	16SB0410507	16SB0470405	16SB0480203	16SB0490405
SAMPLE DATE	20030327	20030327	20030409	20030328	20030328	20030328	20030328	20030328	20030327	20030327	20031205	20031205	20031205
ROUND	01	01	01	01	01	01	01	01	01	01	02	02	02
EVENT													
SAMPLE CODE	NORMAL	NORMAL	NORMAL	NORMAL	NORMAL	NORMAL	NORMAL	DUP	NORMAL	NORMAL	NORMAL	NORMAL	NORMAL
MATRIX	SO	SO	SO	SO	SO	SO	SO	SO	SO	SO	SO	SO	SO
SAMPLE TYPE	NORMAL	NORMAL	NORMAL	NORMAL	NORMAL	NORMAL	NORMAL	NORMAL	NORMAL	NORMAL	NORMAL	NORMAL	NORMAL
SUBMATRIX	SB	SB	SB	SB	SB	SB	SB	SB	SB	SB	SB	SB	SB
TOP DEPTH	4	4	2	2	2	5	6	6	3	5	4	2	4
BOTTOM DEPTH	6	6	3	3	3	6	8	8	5	7	5	3	5
DIETHYL PHTHALATE	80 U	76 U	77 U	75 U	82 U	80 U	80 U	81 U	81 U	83 U			
DIMETHYL PHTHALATE	80 U	76 U	77 U	75 U	82 U	80 U	80 U	81 U	81 U	83 U			
DI-N-BUTYL PHTHALATE	80 U	76 U	77 U	75 U	82 U	80 U	80 U	81 U	81 U	83 U			
DI-N-OCTYL PHTHALATE	80 U	76 U	77 U	75 U	82 U	80 U	80 U	81 U	81 U	83 U			
DIPHENYLAMINE	80 U	76 U	77 U	75 U	82 U	80 U	80 U	81 U	81 U	83 U			
ETHYL METHANE SULFONATE	80 U	76 U	77 U	75 U	82 U	80 U	80 U	81 U	81 U	83 U			
FLUORANTHENE	3.9 U	3.7 U	3.8 U	3.7 U	4.1 U	3.9 U	3.9 U	4 U	4 U	4.1 U			
FLUORENE	3.9 U	3.7 U	3.8 U	3.7 U	4.1 U	3.9 U	3.9 U	4 U	4 U	4.1 U			
HEXACHLOROBENZENE	80 U	76 U	77 U	75 U	82 U	80 U	80 U	81 U	81 U	83 U			
HEXACHLOROBUTADIENE	80 U	76 U	77 U	75 U	82 U	80 U	80 U	81 U	81 U	83 U			
HEXACHLOROCYCLOPENTADIENE	80 U	76 U	77 U	75 UJ	82 UJ	80 UJ	80 UJ	81 UJ	81 U	83 U			
HEXACHLOROETHANE	80 U	76 U	77 U	75 U	82 U	80 U	80 U	81 U	81 U	83 U			
HEXACHLOROPROPENE	80 U	76 U	77 U	75 U	82 U	80 U	80 U	81 U	81 U	83 U			
INDENO(1,2,3-CD)PYRENE	3.9 U	3.7 U	3.8 U	3.7 U	4.1 U	3.9 U	3.9 U	4 U	4 U	4.1 U			
ISODRIN	80 U	76 U	77 U	75 U	82 U	80 U	80 U	81 U	81 U	83 U			
ISOPHORONE	80 U	76 U	77 U	75 U	82 U	80 U	80 U	81 U	81 U	83 U			
ISOSAFROLE	80 U	76 U	77 U	75 U	82 U	80 U	80 U	81 U	81 U	150 J			
KEPONE	80 UJ	76 UJ	77 UR	75 UR	82 UR	80 UR	80 UR	81 UR	81 UJ	83 UJ			
METHAPYRILENE	80 U	76 UJ	77 U	75 UJ	82 UJ	80 U	80 U	81 U	81 U	83 U			
METHYL METHANE SULFONATE	80 U	76 U	77 U	75 U	82 U	80 U	80 U	81 U	81 U	83 U			
NAPHTHALENE	3.9 U	3.7 U	3.8 U	3.7 U	5 J	3.9 U	3.9 U	4 U	4 U	6 J			
N-NITROSODIETHYLAMINE	80 U	76 U	77 U	75 U	82 U	80 U	80 U	81 U	81 U	83 U			
N-NITROSODIMETHYLAMINE	80 U	76 U	77 U	75 U	82 U	80 U	80 U	81 U	81 U	83 U			
N-NITROSO-DI-N-BUTYLAMINE	80 U	76 U	77 U	75 U	82 U	80 U	80 U	81 U	81 U	83 U			
N-NITROSO-DI-N-PROPYLAMINE	80 U	76 U	77 U	75 U	82 U	80 U	80 U	81 U	81 U	83 U			
N-NITROSOMETHYLETHYLAMINE	80 U	76 U	77 U	75 U	82 U	80 U	80 U	81 U	81 U	83 U			
N-NITROSOMORPHOLINE	80 U	76 U	77 U	75 U	82 U	80 U	80 U	81 U	81 U	83 U			
N-NITROSOPIPERIDINE	80 U	76 U	77 U	75 U	82 U	80 U	80 U	81 U	81 U	83 U			
N-NITROSOPYRROLIDINE	80 U	76 U	77 U	75 U	82 U	80 U	80 U	81 U	81 U	83 U			
O,O,O-TRIETHYL PHOSPHOROTHIOATE	80 U	76 U	77 U	75 U	82 U	80 U	80 U	81 U	81 U	83 U			
O-TOLUIDINE	80 U	76 U	77 U	75 U	82 U	80 U	80 U	81 U	81 U	83 U			
PENTACHLOROBENZENE	80 U	76 U	77 U	75 U	82 U	80 U	80 U	81 U	81 U	83 U			
PENTACHLOROETHANE	80 U	76 U	77 U	75 U	82 U	80 U	80 U	81 U	81 U	83 U			
PENTACHLORONITROBENZENE	80 U	76 U	77 U	75 U	82 U	80 U	80 U	81 U	81 U	83 U			
PHENACETIN	80 U	76 U	77 U	75 U	82 U	80 U	80 U	81 U	81 U	83 U			
PHENANTHRENE	3.9 U	3.7 U	3.8 U	3.7 U	4.1 U	3.9 U	3.9 U	4 U	4 U	6 J			
PHENOL	80 U	76 U	77 U	75 U	82 U	80 U	80 U	81 U	81 U	83 U			
PRONAMIDE	80 U	76 U	77 U	75 U	82 U	80 U	80 U	81 U	81 U	83 U			
PYRENE	3.9 U	3.7 U	3.8 U	3.7 U	4.1 U	3.9 U	3.9 U	4 U	4 U	6 J			
PYRIDINE	80 U	76 U	77 U	75 U	82 U	80 U	80 U	81 U	81 U	83 U			
SAFROLE	80 U	76 U	77 U	75 U	82 U	80 U	80 U	81 U	81 U	67000			
SOLVENT YELLOW 2	80 U	76 U	77 U	75 U	82 U	80 U	80 U	81 U	81 U	83 U			
VOLATILES (UG/KG)													
1,1,1,2-TETRACHLOROETHANE	1.2 U	1.1 U	1.2 U	1.1 U	1.2 U	1.2 U	1.2 U	1.2 U	1.2 U	1.2 U	1.18 U	1.12 U	0.814 U
1,1,1-TRICHLOROETHANE	1.2 U	1.1 U	1.2 U	1.1 U	1.2 U	1.2 U	1.2 U	1.2 U	1.2 U	1.2 U	1.18 U	1.12 U	0.814 U
1,1,2,2-TETRACHLOROETHANE	1.2 U	1.1 U	1.2 U	1.1 U	1.2 U	1.2 U	1.2 U	1.2 U	1.2 U	1.2 U	1.18 U	1.12 U	0.814 U
1,1,2-TRICHLOROETHANE	1.2 U	1.1 U	1.2 U	1.1 U	1.2 U	1.2 U	1.2 U	1.2 U	1.2 U	1.2 U	1.18 U	1.12 U	0.814 U
1,1,2-TRICHLOROTRIFLUOROETHANE													
1,1-DICHLOROETHANE	1.2 U	1.1 U	1.2 U	1.1 U	1.2 U	1.2 U	1.2 U	1.2 U	1.2 U	1.2 U	1.18 U	1.12 U	0.814 U
1,1-DICHLOROETHENE	1.2 U	1.1 U	1.2 U	1.1 U	1.2 U	1.2 U	1.2 U	1.2 U	1.2 U	1.2 U	1.18 U	1.12 U	0.814 U
1,2,3-TRICHLOROBENZENE													
1,2,3-TRICHLOROPROPANE	1.2 U	1.1 U	1.2 U	1.1 U	1.2 U	1.2 U	1.2 U	1.2 U	1.2 U	1.2 U	1.18 U	1.12 UJ	0.814 U
1,2,4-TRICHLOROBENZENE													
1,2-DIBROMO-3-CHLOROPROPANE	1.2 U	1.1 U	1.2 U	1.1 U	1.2 U	1.2 U	1.2 U	1.2 U	1.2 U	1.2 U	1.18 U	1.12 UJ	0.814 UJ
1,2-DIBROMOETHANE	1.2 U	1.1 U	1.2 U	1.1 U	1.2 U	1.2 U	1.2 U	1.2 U	1.2 U	1.2 U	1.18 U	1.12 U	0.814 U
1,2-DICHLOROBENZENE													
1,2-DICHLOROETHANE	1.2 U	1.1 U	1.2 U	1.1 U	1.2 U	1.2 U	1.2 U	1.2 U	1.2 U	1.2 U	1.18 U	1.12 U	0.814 U
1,2-DICHLOROPROPANE	1.2 U	1.1 U	1.2 U	1.1 U	1.2 U	1.2 U	1.2 U	1.2 U	1.2 U	1.2 U	1.18 U	1.12 U	0.814 U
1,3-DICHLOROBENZENE													
1,4-DICHLOROBENZENE													
1,4-DIOXANE						120 U	120 U	120 U	120 U	120 U	106 U	145 U	107 U
2-BUTANONE	1.2 U	1.1 U	1.2 U	1.1 U	1.2 U	1.2 U	1.2 U	1.2 U	1.2 U	1.2 U	1.18 U	1.12 U	0.814 U
2-HEXANONE	1.2 U	1.1 U	1.2 U	1.1 U	1.2 U	1.2 U	1.2 U	1.2 U	1.2 U	1.2 U	1.18 U	1.12 U	0.814 U
3-CHLOROPROPENE	1.2 U	1.1 U	1.2 U	1.1 U	1.2 U	1.2 U	1.2 U	1.2 U	1.2 U	1.2 U	1.18 U	1.12 U	0.814 U
4-METHYL-2-PENTANONE	1.2 U	1.1 U	1.2 U	1.1 U	1.2 U	1.2 U	1.2 U	1.2 U	1.2 U	1.2 U	1.18 U	1.12 U	0.814 U
ACETONE	1.2 UJ	1.1 UJ	1.2 UJ	1.1 UJ	1.2 UJ	1.2 UJ	1.2 UJ	1.2 UJ	4 J	14 J	1.18 UJ	1.12 UJ	6 J
ACETONITRILE						48 U	48 U	49 U	48 U	50 U	42.4 U	58 UR	42.6 U

TABLE A-2

SUBSURFACE SOIL SAMPLE DATA
SWMU 16
NSA CRANE
CRANE, INDIANA

LOCATION	16SB001	16SB002	16SB036	16SB038	16SB039	16SB040	16SB040	16SB040	16SB041	16SB041	16SB047	16SB048	16SB049
SAMPLE ID	16SB0010406	16SB0020406	16SB0360203	16SB0380203	16SB0390203	16SB0400506	16SB0400608	16SB0400608-D	16SB0410305	16SB0410507	16SB0470405	16SB0480203	16SB0490405
SAMPLE DATE	20030327	20030327	20030409	20030328	20030328	20030328	20030328	20030328	20030327	20030327	20031205	20031205	20031205
ROUND	01	01	01	01	01	01	01	01	01	01	02	02	02
EVENT													
SAMPLE CODE	NORMAL	NORMAL	NORMAL	NORMAL	NORMAL	NORMAL	NORMAL	DUP	NORMAL	NORMAL	NORMAL	NORMAL	NORMAL
MATRIX	SO	SO	SO	SO	SO	SO	SO	SO	SO	SO	SO	SO	SO
SAMPLE TYPE	NORMAL	NORMAL	NORMAL	NORMAL	NORMAL	NORMAL	NORMAL	NORMAL	NORMAL	NORMAL	NORMAL	NORMAL	NORMAL
SUBMATRIX	SB	SB	SB	SB	SB	SB	SB	SB	SB	SB	SB	SB	SB
TOP DEPTH	4	4	2	2	2	5	6	6	3	5	4	2	4
BOTTOM DEPTH	6	6	3	3	3	6	8	8	5	7	5	3	5
ACROLEIN	1.2 U	1.1 UR	1.2 UR	1.1 U	1.2 U	1.2 U	1.2 U	1.2 U	1.2 UR	1.2 UR	1.18 UR	1.12 UR	0.814 UR
ACRYLONITRILE	1.2 U	1.1 U	1.2 U	1.1 U	1.2 U	1.2 U	1.2 U	1.2 U	1.2 U	1.2 U	1.18 UR	1.12 U	0.814 UR
BENZENE	1.2 U	1.1 U	1.2 U	1.1 U	1.2 U	1.2 U	1.2 U	1.2 U	1.2 U	1.2 U	1.18 U	1.12 U	0.814 U
BROMODICHLOROMETHANE	1.2 U	1.1 U	1.2 U	1.1 U	1.2 U	1.2 U	1.2 U	1.2 U	1.2 U	1.2 U	1.18 U	1.12 U	0.814 U
BROMOFORM	1.2 U	1.1 U	1.2 U	1.1 U	1.2 U	1.2 U	1.2 U	1.2 U	1.2 U	1.2 U	1.18 U	1.12 U	0.814 U
BROMOMETHANE	1.2 UJ	1.1 UJ	1.2 UJ	1.1 UJ	1.2 UJ	1.2 UJ	1.2 UJ	1.2 UJ	1.2 UJ	1.2 UJ	1.18 UJ	1.12 UJ	0.814 U
CARBON DISULFIDE	1.2 UJ	1.1 UJ	1.2 UJ	1.1 UJ	1.2 UJ	1.2 UJ	1.2 UJ	1.2 UJ	1.2 UJ	1.2 U	1.18 U	1.12 U	0.814 U
CARBON TETRACHLORIDE	1.2 U	1.1 U	1.2 U	1.1 U	1.2 U	1.2 U	1.2 U	1.2 U	1.2 U	1.2 U	1.18 U	1.12 U	0.814 U
CHLOROBENZENE	1.2 U	1.1 U	1.2 U	1.1 U	1.2 U	1.2 U	1.2 U	1.2 U	1.2 U	1.2 U	1.18 U	1.12 U	0.814 U
CHLORODIBROMOMETHANE	1.2 U	1.1 U	1.2 U	1.1 U	1.2 U	1.2 U	1.2 U	1.2 U	1.2 U	1.2 U	1.18 U	1.12 U	0.814 U
CHLOROETHANE	1.2 U	1.1 U	1.2 U	1.1 U	1.2 U	1.2 U	1.2 U	1.2 U	1.2 U	1.2 U	1.18 U	1.12 U	0.814 U
CHLOROFORM	1.2 U	1.1 U	1.2 U	1.1 U	1.2 U	1.2 U	1.2 U	1.2 U	1.2 U	1.2 U	1.18 U	1.12 U	0.814 U
CHLOROMETHANE	1.2 U	1.1 U	1.2 U	1.1 U	1.2 U	1.2 U	1.2 U	1.2 U	1.2 U	1.2 U	1.18 U	1.12 U	0.814 U
CHLOROPRENE	1.2 U	1.1 U	1.2 U	1.1 U	1.2 U	1.2 U	1.2 U	1.2 U	1.2 U	1.2 U	1.18 U	1.12 U	0.814 U
CIS-1,2-DICHLOROETHENE	1.2 U	1.1 U	1.2 U	1.1 U	200	1.2 U	1.2 U	1.2 U	1.2 U	1.2 U	22	1.12 U	0.814 U
CIS-1,3-DICHLOROPROPENE	1.2 U	1.1 U	1.2 U	1.1 U	1.2 U	1.2 U	1.2 U	1.2 U	1.2 U	1.2 U	1.18 U	1.12 U	0.814 U
CYCLOHEXANE													
DIBROMOMETHANE	1.2 U	1.1 U	1.2 U	1.1 U	1.2 U	1.2 U	1.2 U	1.2 U	1.2 U	1.2 U	1.18 U	1.12 U	0.814 U
DICHLORODIFLUOROMETHANE	1.2 U	1.1 UJ	1.2 UJ	1.1 U	1.2 UJ	1.2 UJ	1.2 UJ	1.2 UJ	1.2 U	1.2 U	170	130 J	79 J
ETHYL METHACRYLATE	1.2 U	1.1 U	1.2 U	1.1 U	1.2 U	1.2 U	1.2 U	1.2 U	1.2 U	1.2 U	1.18 U	1.12 U	0.814 U
ETHYLBENZENE	1.2 U	1.1 U	1.2 U	1.1 U	1.2 U	1.2 U	1.2 U	1.2 U	1.2 U	1.2 U	1.18 U	1.12 U	0.814 U
ISOBUTANOL						48 U	48 U	49 U	48 U	50 U	42.4 U	58 U	42.6 U
ISOPROPYLBENZENE													
METHACRYLONITRILE	1.2 U	1.1 U	1.2 U	1.1 U	1.2 U	1.2 U	1.2 U	1.2 U	1.2 U	1.2 U	1.18 U	1.12 U	0.814 U
METHYL ACETATE													
METHYL IODIDE	1.2 UJ	1.1 UJ	1.2 U	1.1 UJ	1.2 UJ	1.2 UJ	1.2 UJ	1.2 UJ	1.2 UJ	1.2 UJ	1.18 UJ	1.12 UJ	0.814 UJ
METHYL METHACRYLATE	1.2 U	1.1 U	1.2 U	1.1 U	1.2 U	1.2 U	1.2 U	1.2 U	1.2 U	1.2 U	1.18 U	1.12 U	0.814 U
METHYL TERT-BUTYL ETHER													
METHYLENE CHLORIDE	6 BU	4 U	1.2 UJ	3 BU	2 BU	3 BU	2 BU	6 BU	1.2 UJ	3 U	25 U	28 U	14 U
PROPIONITRILE						48 U	48 U	49 U	48 U	50 U	42.4 U	58 U	42.6 U
STYRENE	1.2 U	1.1 U	1.2 U	1.1 U	1.2 U	1.2 U	1.2 U	1.2 U	1.2 U	1.2 U	1.18 U	1.12 U	0.814 U
TETRACHLOROETHENE	1.2 U	1.1 U	1.2 U	1.1 U	1.2 U	1.2 U	1.2 U	1.2 U	1.2 U	1.2 U	1.18 U	1.12 U	0.814 U
TOLUENE	1.2 U	1.1 U	1.2 U	1.1 U	1.2 U	1.2 U	1.2 U	1.2 U	1.2 U	1.2 U	1.18 U	1.12 U	0.814 U
TOTAL XYLENES	1.2 U	1.1 U	1.2 U	1.1 U	1.2 U	1.2 U	1.2 U	1.2 U	1.2 U	1.2 U	2 J	2 J	2 J
TRANS-1,2-DICHLOROETHENE	1.2 U	1.1 U	1.2 U	1.1 U	12	1.2 U	1.2 U	1.2 U	1.2 U	1.2 U	1.18 U	1.12 U	0.814 U
TRANS-1,3-DICHLOROPROPENE	1.2 U	1.1 U	1.2 U	1.1 U	1.2 U	1.2 U	1.2 U	1.2 U	1.2 U	1.2 U	1.18 U	1.12 U	0.814 U
TRANS-1,4-DICHLORO-2-BUTENE	1.2 U	1.1 U	1.2 U	1.1 U	1.2 U	1.2 U	1.2 U	1.2 U	1.2 U	1.2 U	1.18 U	1.12 U	0.814 U
TRICHLOROETHENE	1.2 U	1.1 U	1.2 U	4	280	1.2 U	1.2 U	1.2 U	1.2 U	1.2 U	61	97 J	37
TRICHLOROFLUOROMETHANE	2 J	2 J	1.2 U	2 J	2 J	2 J	2 J	3 J	1.2 U	2 J	1.18 U	1.12 U	0.814 U
VINYL ACETATE	1.2 U	1.1 U	1.2 U	1.1 U	1.2 U	1.2 U	1.2 U	1.2 U	1.2 U	1.2 UJ	1.18 U	1.12 U	0.814 U
VINYL CHLORIDE	1.2 U	1.1 U	1.2 U	1.1 U	1.2 U	1.2 U	1.2 U	1.2 U	1.2 U	1.2 U	1.18 U	1.12 U	0.814 U

TABLE A-2

SUBSURFACE SOIL SAMPLE DATA
SWMU 16
NSA CRANE
CRANE, INDIANA

LOCATION	16SB050	16SB050	16SB051	16SB052	16SB053	16SB054	16SB055	16SB055	16SB056	16SB056	16SB057	16SB058	16SB058
SAMPLE ID	16SB0500103	16SB0500103-D	16SB0510204	16SB0520205	16SB0530205	16SB0540205	16SB0550206	16SB0550607	16SB0560206	16SB0560608	16SB0570206	16SB0580206	16SB0580206-D
SAMPLE DATE	20031205	20031205	20040813	20040812	20040812	20040813	20040812	20040812	20040812	20040812	20040813	20040813	20040813
ROUND	02	02	03	03	03	03	03	03	03	03	03	03	03
EVENT													
SAMPLE CODE	NORMAL	DUP	NORMAL	NORMAL	NORMAL	NORMAL	NORMAL	NORMAL	NORMAL	NORMAL	NORMAL	NORMAL	DUP
MATRIX	SO	SO	SO	SO	SO	SO	SO	SO	SO	SO	SO	SO	SO
SAMPLE TYPE	NORMAL	NORMAL	NORMAL	NORMAL	NORMAL	NORMAL	NORMAL	NORMAL	NORMAL	NORMAL	NORMAL	NORMAL	NORMAL
SUBMATRIX	SB	SB	SB	SB	SB	SB	SB	SB	SB	SB	SB	SB	SB
TOP DEPTH	1	1	2	2	2	2	2	6	2	6	2	2	2
BOTTOM DEPTH	3	3	4	5	5	5	6	7	6	8	6	6	6
EXPLOSIVES (MG/KG)													
1,3,5-TRINITROBENZENE													
1,3-DINITROBENZENE													
2,4,6-TRINITROTOLUENE													
2,4-DINITROTOLUENE													
2,6-DINITROTOLUENE													
2-AMINO-4,6-DINITROTOLUENE													
2-NITROTOLUENE													
3-NITROTOLUENE													
4-AMINO-2,6-DINITROTOLUENE													
4-NITROTOLUENE													
HMX													
NITROBENZENE													
PICRAMIC ACID													
PICRIC ACID													
RDX													
TETRYL													
HERBICIDES (UG/KG)													
HEXACHLOROPHENE													
PENTACHLOROPHENOL													
METALS (MG/KG)													
ALUMINUM													
ANTIMONY													
ARSENIC													
BARIUM													
BERYLLIUM													
CADMIUM													
CALCIUM													
CHROMIUM													
COBALT													
COPPER													
IRON													
LEAD													
LITHIUM													
MAGNESIUM													
MANGANESE													
MERCURY													
NICKEL													
POTASSIUM													
SELENIUM													
SILVER													
SODIUM													
STRONTIUM													
THALLIUM													
TIN													
TITANIUM													
VANADIUM													
ZINC													
METALS (UG/KG)													
LEAD													
MISCELLANEOUS PARAMETERS (%)													
PERCENT MOISTURE													
MISCELLANEOUS PARAMETERS (MEQ/100)													
CATION EXCHANGE CAPACITY													
MISCELLANEOUS PARAMETERS (MG/KG)													
TOTAL ORGANIC CARBON													
MISCELLANEOUS PARAMETERS (S.U.)													
PH													
PESTICIDES/PCBS (UG/KG)													
AROCLOR-1016													
AROCLOR-1221													
AROCLOR-1232													
AROCLOR-1242													
AROCLOR-1248													
AROCLOR-1254													
AROCLOR-1260													

TABLE A-2

SUBSURFACE SOIL SAMPLE DATA
SWMU 16
NSA CRANE
CRANE, INDIANA

LOCATION	16SB050	16SB050	16SB051	16SB052	16SB053	16SB054	16SB055	16SB055	16SB056	16SB056	16SB057	16SB058	16SB058
SAMPLE ID	16SB0500103	16SB0500103-D	16SB0510204	16SB0520205	16SB0530205	16SB0540205	16SB0550206	16SB0550607	16SB0560206	16SB0560608	16SB0570206	16SB0580206	16SB0580206-D
SAMPLE DATE	20031205	20031205	20040813	20040812	20040812	20040813	20040812	20040812	20040812	20040812	20040813	20040813	20040813
ROUND	02	02	03	03	03	03	03	03	03	03	03	03	03
EVENT													
SAMPLE CODE	NORMAL	DUP	NORMAL	NORMAL	NORMAL	NORMAL	NORMAL	NORMAL	NORMAL	NORMAL	NORMAL	NORMAL	DUP
MATRIX	SO	SO	SO	SO	SO	SO	SO	SO	SO	SO	SO	SO	SO
SAMPLE TYPE	NORMAL	NORMAL	NORMAL	NORMAL	NORMAL	NORMAL	NORMAL	NORMAL	NORMAL	NORMAL	NORMAL	NORMAL	NORMAL
SUBMATRIX	SB	SB	SB	SB	SB	SB	SB	SB	SB	SB	SB	SB	SB
TOP DEPTH	1	1	2	2	2	2	2	6	2	6	2	2	2
BOTTOM DEPTH	3	3	4	5	5	5	6	7	6	8	6	6	6
PETROLEUM HYDROCARBONS (UG/KG)													
DRO (C08-C28)													
TPH (C06-C12)													
SEMIVOLATILES (UG/KG)													
1,2,4,5-TETRACHLOROBENZENE													
1,2,4-TRICHLOROBENZENE													
1,2-DICHLOROBENZENE													
1,3-DICHLOROBENZENE													
1,4-DICHLOROBENZENE													
1,4-NAPHTHOQUINONE													
1,4-PHENYLENEDIAMINE													
1-NAPHTHYLAMINE													
2,2'-OXYBIS(1-CHLOROPROPANE)													
2,3,4,6-TETRACHLOROPHENOL													
2,4,5-TRICHLOROPHENOL													
2,4,6-TRICHLOROPHENOL													
2,4-DICHLOROPHENOL													
2,4-DIMETHYLPHENOL													
2,4-DINITROPHENOL													
2,6-DICHLOROPHENOL													
2-ACETYLAMINOFLUORENE													
2-CHLORONAPHTHALENE													
2-CHLOROPHENOL													
2-METHYLNAPHTHALENE													
2-METHYLPHENOL													
2-NAPHTHYLAMINE													
2-NITROANILINE													
2-NITROPHENOL													
2-PICOLINE													
3&4-METHYLPHENOL													
3,3'-DICHLOROBENZIDINE													
3,3'-DIMETHYLBENZIDINE													
3-METHYLCHOLANTHRENE													
3-NITROANILINE													
4,6-DINITRO-2-METHYLPHENOL													
4-AMINOBIPHENYL													
4-BROMOPHENYL PHENYL ETHER													
4-CHLORO-3-METHYLPHENOL													
4-CHLOROANILINE													
4-CHLOROPHENYL PHENYL ETHER													
4-NITROANILINE													
4-NITROPHENOL													
4-NITROQUINOLINE-1-OXIDE													
5-NITRO-O-TOLUIDINE													
7,12-DIMETHYLBENZ(A)ANTHRACENE													
A,A-DIMETHYLPHENETHYLAMINE													
ACENAPHTHENE													
ACENAPHTHYLENE													
ACETOPHENONE													
ANILINE													
ANTHRACENE													
ARAMITE													
BENZO(A)ANTHRACENE													
BENZO(A)PYRENE													
BENZO(B)FLUORANTHENE													
BENZO(G,H,I)PERYLENE													
BENZO(K)FLUORANTHENE													
BENZYL ALCOHOL													
BIS(2-CHLOROETHOXY)METHANE													
BIS(2-CHLOROETHYL)ETHER													
BIS(2-ETHYLHEXYL)PHTHALATE													
BUTYL BENZYL PHTHALATE													
CHLOROBENZILATE													
CHRYSENE													
DIALLATE													
DIBENZO(A,H)ANTHRACENE													
DIBENZOFURAN													

TABLE A-2

SUBSURFACE SOIL SAMPLE DATA
SWMU 16
NSA CRANE
CRANE, INDIANA

LOCATION	16SB050	16SB050	16SB051	16SB052	16SB053	16SB054	16SB055	16SB055	16SB056	16SB056	16SB057	16SB058	16SB058
SAMPLE ID	16SB0500103	16SB0500103-D	16SB0510204	16SB0520205	16SB0530205	16SB0540205	16SB0550206	16SB0550607	16SB0560206	16SB0560608	16SB0570206	16SB0580206	16SB0580206-D
SAMPLE DATE	20031205	20031205	20040813	20040812	20040812	20040813	20040812	20040812	20040812	20040812	20040813	20040813	20040813
ROUND	02	02	03	03	03	03	03	03	03	03	03	03	03
EVENT													
SAMPLE CODE	NORMAL	DUP	NORMAL	NORMAL	NORMAL	NORMAL	NORMAL	NORMAL	NORMAL	NORMAL	NORMAL	NORMAL	DUP
MATRIX	SO	SO	SO	SO	SO	SO	SO	SO	SO	SO	SO	SO	SO
SAMPLE TYPE	NORMAL	NORMAL	NORMAL	NORMAL	NORMAL	NORMAL	NORMAL	NORMAL	NORMAL	NORMAL	NORMAL	NORMAL	NORMAL
SUBMATRIX	SB	SB	SB	SB	SB	SB	SB	SB	SB	SB	SB	SB	SB
TOP DEPTH	1	1	2	2	2	2	2	6	2	6	2	2	2
BOTTOM DEPTH	3	3	4	5	5	5	6	7	6	8	6	6	6
DIETHYL PHTHALATE													
DIMETHYL PHTHALATE													
DI-N-BUTYL PHTHALATE													
DI-N-OCTYL PHTHALATE													
DIPHENYLAMINE													
ETHYL METHANE SULFONATE													
FLUORANTHENE													
FLUORENE													
HEXACHLOROBENZENE													
HEXACHLOROBUTADIENE													
HEXACHLOROCYCLOPENTADIENE													
HEXACHLOROETHANE													
HEXACHLOROPROPENE													
INDENO(1,2,3-CD)PYRENE													
ISODRIN													
ISOPHORONE													
ISOSAFROLE													
KEPONE													
METHAPYRILENE													
METHYL METHANE SULFONATE													
NAPHTHALENE													
N-NITROSODIETHYLAMINE													
N-NITROSODIMETHYLAMINE													
N-NITROSO-DI-N-BUTYLAMINE													
N-NITROSO-DI-N-PROPYLAMINE													
N-NITROSOMETHYLETHYLAMINE													
N-NITROSOMORPHOLINE													
N-NITROSOPIPERIDINE													
N-NITROSOPYRROLIDINE													
O,O,O-TRIETHYL PHOSPHOROTHIOATE													
O-TOLUIDINE													
PENTACHLOROBENZENE													
PENTACHLOROETHANE													
PENTACHLORONITROBENZENE													
PHENACETIN													
PHENANTHRENE													
PHENOL													
PRONAMIDE													
PYRENE													
PYRIDINE													
SAFROLE													
SOLVENT YELLOW 2													
VOLATILES (UG/KG)													
1,1,1,2-TETRACHLOROETHANE	0.978 U	1.04 U	1.17 U	1.05 U	1.01 U	1.3 U	1.07 U	0.946 U	1.05 UR	1.13 U	1.04 U	1.06 U	0.95 U
1,1,1-TRICHLOROETHANE	0.978 U	1.04 UJ	1.17 U	1.05 U	1.01 U	1.3 U	1.07 U	0.946 U	1.05 UR	1.13 U	1.04 U	1.06 U	0.95 U
1,1,2,2-TETRACHLOROETHANE	0.978 U	1.04 UJ	1.17 U	1.05 U	1.01 U	1.3 U	1.07 U	0.946 U	1.05 UR	1.13 U	1.04 U	1.06 U	0.95 U
1,1,2-TRICHLOROETHANE	0.978 U	1.04 U	1.17 U	1.05 U	1.01 U	1.3 U	1.07 U	0.946 U	8 J	4	1.04 U	1.06 U	0.95 U
1,1,2-TRICHLOROTRIFLUOROETHANE													
1,1-DICHLOROETHANE	0.978 U	1.04 UJ	1.17 U	1.05 U	1.01 U	1.3 U	1.07 U	0.946 U	1.05 UR	1.13 U	1.04 U	1.06 U	0.95 U
1,1-DICHLOROETHENE	0.978 U	1.04 UJ	1.17 U	1.05 U	1.01 U	1.3 U	1.07 U	0.946 U	1.05 UR	1.13 U	1.04 U	1.06 U	0.95 U
1,2,3-TRICHLOROBENZENE													
1,2,3-TRICHLOROPROPANE	0.978 U	1.04 UJ	1.17 U	1.05 U	1.01 U	1.3 U	1.07 U	0.946 U	1.05 UR	1.13 U	1.04 U	1.06 U	0.95 U
1,2,4-TRICHLOROBENZENE													
1,2-DIBROMO-3-CHLOROPROPANE	0.978 U	1.04 UJ	1.17 U	1.05 U	1.01 U	1.3 UJ	1.07 U	0.946 U	1.05 UR	1.13 U	1.04 U	1.06 U	0.95 U
1,2-DIBROMOETHANE	0.978 U	1.04 U	1.17 U	1.05 U	1.01 U	1.3 U	1.07 U	0.946 U	1.05 UR	1.13 U	1.04 U	1.06 U	0.95 U
1,2-DICHLOROBENZENE													
1,2-DICHLOROETHANE	0.978 U	1.04 UJ	1.17 U	1.05 U	1.01 U	1.3 U	1.07 U	0.946 U	1.05 UR	1.13 U	1.04 U	1.06 U	0.95 U
1,2-DICHLOROPROPANE	0.978 U	1.04 UJ	1.17 U	1.05 U	1.01 U	1.3 U	1.07 U	0.946 U	1.05 UR	1.13 U	1.04 U	1.06 U	0.95 U
1,3-DICHLOROBENZENE													
1,4-DICHLOROBENZENE													
1,4-DIOXANE	114 U	113 U	133 U	104 U	96.8 U	174 U	107 U	118 U	104 U	97.1 U	107 U	113 U	92.8 U
2-BUTANONE	0.978 U	1.04 UJ	1.17 U	1.05 U	1.01 U	1.3 U	1.07 U	0.946 U	1.05 UR	1.13 U	1.04 U	1.06 U	0.95 U
2-HEXANONE	0.978 U	1.04 U	1.17 U	1.05 U	1.01 U	1.3 U	1.07 U	0.946 U	1.05 UR	1.13 U	1.04 U	1.06 U	0.95 U
3-CHLOROPROPENE	0.978 U	1.04 UJ	1.17 U	1.05 U	1.01 U	1.3 U	1.07 U	0.946 U	1.05 UR	1.13 U	1.04 U	1.06 U	0.95 U
4-METHYL-2-PENTANONE	0.978 U	1.04 UJ	1.17 U	1.05 U	1.01 U	1.3 U	1.07 U	0.946 U	1.05 UR	1.13 U	1.04 U	1.06 U	0.95 U
ACETONE	0.978 UJ	1.04 UJ	1.17 U	1.05 U	4 J	1.3 U	1.07 U	0.946 U	10 U	9 U	8 J	1.06 U	0.95 U
ACETONITRILE	45.7 U	45.3 U	53.2 U	41.6 U	38.7 U	69.5 U	43 U	47.4 U	41.5 U	38.8 U	42.7 U	45.2 U	37.1 U

TABLE A-2

SUBSURFACE SOIL SAMPLE DATA
SWMU 16
NSA CRANE
CRANE, INDIANA

LOCATION	16SB050	16SB050	16SB051	16SB052	16SB053	16SB054	16SB055	16SB055	16SB056	16SB056	16SB057	16SB058	16SB058
SAMPLE ID	16SB0500103	16SB0500103-D	16SB0510204	16SB0520205	16SB0530205	16SB0540205	16SB0550206	16SB0550607	16SB0560206	16SB0560608	16SB0570206	16SB0580206	16SB0580206-D
SAMPLE DATE	20031205	20031205	20040813	20040812	20040812	20040813	20040812	20040812	20040812	20040812	20040813	20040813	20040813
ROUND	02	02	03	03	03	03	03	03	03	03	03	03	03
EVENT													
SAMPLE CODE	NORMAL	DUP	NORMAL	NORMAL	NORMAL	NORMAL	NORMAL	NORMAL	NORMAL	NORMAL	NORMAL	NORMAL	DUP
MATRIX	SO	SO	SO	SO	SO	SO	SO	SO	SO	SO	SO	SO	SO
SAMPLE TYPE	NORMAL	NORMAL	NORMAL	NORMAL	NORMAL	NORMAL	NORMAL	NORMAL	NORMAL	NORMAL	NORMAL	NORMAL	NORMAL
SUBMATRIX	SB	SB	SB	SB	SB	SB	SB	SB	SB	SB	SB	SB	SB
TOP DEPTH	1	1	2	2	2	2	2	6	2	6	2	2	2
BOTTOM DEPTH	3	3	4	5	5	5	6	7	6	8	6	6	6
ACROLEIN	0.978 UR	1.04 UR	1.17 UR	1.05 UR	1.01 UR	1.3 UR	1.07 UR	0.946 UR	1.05 UR	1.13 UR	1.04 UR	1.06 UR	0.95 UR
ACRYLONITRILE	101 U	55.6 U	1.17 U	1.05 U	1.01 U	1.3 U	1.07 U	0.946 U	1.05 UR	1.13 U	1.04 U	1.06 U	0.95 U
BENZENE	0.978 U	1.04 UJ	1.17 U	1.05 U	1.01 U	1.3 U	1.07 U	0.946 U	1.05 UR	1.13 U	1.04 U	1.06 U	0.95 U
BROMODICHLOROMETHANE	0.978 U	1.04 UJ	1.17 U	1.05 U	1.01 U	1.3 U	1.07 U	0.946 U	1.05 UR	1.13 U	1.04 U	1.06 U	0.95 U
BROMOFORM	0.978 U	1.04 U	1.17 U	1.05 U	1.01 U	1.3 U	1.07 U	0.946 U	1.05 UR	1.13 U	1.04 U	1.06 U	0.95 U
BROMOMETHANE	0.978 UJ	1.04 UJ	1.17 U	1.05 U	1.01 U	1.3 U	1.07 U	0.946 U	4 J	1.13 UJ	1.04 U	1.06 U	0.95 U
CARBON DISULFIDE	0.978 U	1.04 UJ	1.17 U	1.05 U	1.01 U	1.3 U	1.07 U	0.946 U	1.05 UR	1.13 U	1.04 U	1.06 U	0.95 U
CARBON TETRACHLORIDE	0.978 U	1.04 UJ	1.17 U	1.05 U	1.01 U	1.3 U	1.07 U	0.946 U	1.05 UR	1.13 U	1.04 U	1.06 U	0.95 U
CHLOROBENZENE	0.978 U	1.04 U	1.17 U	1.05 U	1.01 U	1.3 U	1.07 U	0.946 U	1.05 UR	1.13 U	1.04 U	1.06 U	0.95 U
CHLORODIBROMOMETHANE	0.978 U	1.04 U	1.17 U	1.05 U	1.01 U	1.3 U	1.07 U	0.946 U	1.05 UR	1.13 U	1.04 U	1.06 U	0.95 U
CHLOROETHANE	0.978 U	1.04 UJ	1.17 U	1.05 U	1.01 U	1.3 U	1.07 U	0.946 U	1.05 UR	1.13 U	1.04 U	1.06 U	0.95 U
CHLOROFORM	0.978 U	1.04 UJ	1.17 U	1.05 U	1.01 U	1.3 U	1.07 U	0.946 U	1.1 J	1.13 U	1.04 U	1.06 U	0.95 U
CHLOROMETHANE	0.978 U	1.04 UJ	1.17 U	1.05 U	1.01 U	1.3 U	1.07 U	0.946 U	1.05 UR	1.13 U	1.04 U	1.06 U	0.95 U
CHLOROPRENE	0.978 U	1.04 UJ	1.17 U	1.05 U	1.01 U	1.3 U	1.07 U	0.946 U	1.05 UR	1.13 U	1.04 U	1.06 U	0.95 U
CIS-1,2-DICHLOROETHENE	0.978 U	1.04 UJ	1.17 U	1.05 U	1.01 U	1.3 U	1.07 U	0.946 U	1.05 UR	1.13 U	1.04 U	1.06 U	0.95 U
CIS-1,3-DICHLOROPROPENE	0.978 U	1.04 UJ	1.17 U	1.05 U	1.01 U	1.3 U	1.07 U	0.946 U	1.05 UR	1.13 U	1.04 U	1.06 U	0.95 U
CYCLOHEXANE													
DIBROMOMETHANE	0.978 U	1.04 U	1.17 U	1.05 U	1.01 U	1.3 U	1.07 U	0.946 U	1.05 UR	1.13 U	1.04 U	1.06 U	0.95 U
DICHLORODIFLUOROMETHANE	110	110 J	1.17 J	4	10	2 J	5	9	1.05 UR	1.13 U	5	1.06 U	0.95 U
ETHYL METHACRYLATE	0.978 U	1.04 U	1.17 U	1.05 U	1.01 U	1.3 U	1.07 U	0.946 U	1.05 UR	1.13 U	1.04 U	1.06 U	0.95 U
ETHYLBENZENE	0.978 U	1.04 U	1.17 U	1.05 U	1.01 U	1.3 U	1.07 U	0.946 U	1.05 UR	1.13 U	1.04 U	1.06 U	0.95 U
ISOBUTANOL	45.7 U	45.3 U	53.2 U	41.6 U	38.7 U	69.5 U	43 U	47.4 U	41.5 U	38.8 U	42.7 U	45.2 U	37.1 U
ISOPROPYLBENZENE													
METHACRYLONITRILE	0.978 U	1.04 UJ	1.17 U	1.05 U	1.01 U	1.3 U	1.07 U	0.946 U	1.05 UR	1.13 U	1.04 U	1.06 U	0.95 U
METHYL ACETATE													
METHYL IODIDE	0.978 UJ	1.04 UJ	1.17 U	1.05 U	1.01 U	1.3 U	1.07 U	0.946 U	1.05 UR	1.13 U	1.04 U	1.06 U	0.95 U
METHYL METHACRYLATE	0.978 U	1.04 U	1.17 U	1.05 U	1.01 U	1.3 U	1.07 U	0.946 U	1.05 UR	1.13 U	1.04 U	1.06 U	0.95 U
METHYL TERT-BUTYL ETHER													
METHYLENE CHLORIDE	19 U	29 U	1.17 UJ	1.05 UJ	1.01 UJ	1.3 UJ	1.07 UJ	0.946 UJ	1.05 UR	1.13 U	1.04 UJ	1.06 UJ	0.95 UJ
PROPIONITRILE	45.7 U	45.3 U	53.2 U	41.6 U	38.7 U	69.5 U	43 U	47.4 U	41.5 U	38.8 U	42.7 U	45.2 U	37.1 U
STYRENE	0.978 U	1.04 U	1.17 U	1.05 U	1.01 U	1.3 U	1.07 U	0.946 U	1.05 UR	1.13 U	1.04 U	1.06 U	0.95 U
TETRACHLOROETHENE	0.978 U	1.04 U	1.17 U	1.05 U	1.01 U	1.3 U	1.07 U	0.946 U	1.05 UR	1.13 U	1.04 U	1.06 U	0.95 U
TOLUENE	0.978 U	1.04 U	1.17 U	1.05 U	1.01 U	1.3 U	1.07 U	0.946 U	1.05 UR	1.13 U	1.04 U	1.06 U	0.95 U
TOTAL XYLENES	1 J	2 J	1.17 U	1.05 U	1.01 U	1.3 U	1.07 U	0.946 U	1.05 UR	1.13 U	1.04 U	1.06 U	0.95 U
TRANS-1,2-DICHLOROETHENE	1 J	1.04 UJ	1.17 U	1.05 U	1.01 U	1.3 U	1.07 U	0.946 U	1.05 UR	1.13 U	1.04 U	1.06 U	0.95 U
TRANS-1,3-DICHLOROPROPENE	0.978 U	1.04 U	1.17 U	1.05 U	1.01 U	1.3 U	1.07 U	0.946 U	1.05 UR	1.13 U	1.04 U	1.06 U	0.95 U
TRANS-1,4-DICHLORO-2-BUTENE	0.978 U	1.04 UJ	1.17 U	1.05 U	1.01 U	1.3 U	1.07 U	0.946 U	1.05 UR	1.13 U	1.04 U	1.06 U	0.95 U
TRICHLOROETHENE	190 J	160	1.17 U	14	1300	210	79	2 J	930 J	200	1.04 U	18	16
TRICHLOROFLUOROMETHANE	0.978 U	1.04 UJ	1.17 U	1.05 U	1.01 U	1.3 U	1.07 U	0.946 U	1.05 UR	1.13 U	1.04 U	1.06 U	0.95 U
VINYL ACETATE	0.978 U	1.04 UJ	1.17 U	1.05 U	1.01 U	1.3 U	1.07 U	0.946 U	1.05 UR	1.13 U	1.04 U	1.06 U	0.95 U
VINYL CHLORIDE	0.978 U	1.04 UJ	1.17 U	1.05 U	1.01 U	1.3 U	1.07 U	0.946 U	1.05 U	1.13 U	1.04 U	1.06 U	0.95 U

TABLE A-2

SUBSURFACE SOIL SAMPLE DATA
SWMU 16
NSA CRANE
CRANE, INDIANA

LOCATION	16SB058	16SB059	16SB059	16SB060	16SB060	16SB061	16SB061	16SB062	16SB062	16SB063	16SB063	16SB064	16SB064
SAMPLE ID	16SB0580607	16SB0590206	16SB0590608	16SB0600206	16SB0600609	16SB0610206	16SB0610607	16SB0620206	16SB0620607	16SB0630206	16SB0630608	16SB0640206	16SB0640608
SAMPLE DATE	20040813	20040813	20040813	20040811	20040811	20040811	20040811	20040813	20040813	20040811	20040811	20040811	20040811
ROUND	03	03	03	03	03	03	03	03	03	03	03	03	03
EVENT													
SAMPLE CODE	NORMAL	NORMAL	NORMAL	NORMAL	NORMAL	NORMAL	NORMAL	NORMAL	NORMAL	NORMAL	NORMAL	NORMAL	NORMAL
MATRIX	SO	SO	SO	SO	SO	SO	SO	SO	SO	SO	SO	SO	SO
SAMPLE TYPE	NORMAL	NORMAL	NORMAL	NORMAL	NORMAL	NORMAL	NORMAL	NORMAL	NORMAL	NORMAL	NORMAL	NORMAL	NORMAL
SUBMATRIX	SB	SB	SB	SB	SB	SB	SB	SB	SB	SB	SB	SB	SB
TOP DEPTH	6	2	6	2	6	2	6	2	6	2	6	2	6
BOTTOM DEPTH	7	6	8	6	9	6	7	6	7	6	8	6	8
EXPLOSIVES (MG/KG)													
1,3,5-TRINITROBENZENE													
1,3-DINITROBENZENE													
2,4,6-TRINITROTOLUENE													
2,4-DINITROTOLUENE													
2,6-DINITROTOLUENE													
2-AMINO-4,6-DINITROTOLUENE													
2-NITROTOLUENE													
3-NITROTOLUENE													
4-AMINO-2,6-DINITROTOLUENE													
4-NITROTOLUENE													
HMX													
NITROBENZENE													
PICRAMIC ACID													
PICRIC ACID													
RDX													
TETRYL													
HERBICIDES (UG/KG)													
HEXACHLOROPHENE													
PENTACHLOROPHENOL													
METALS (MG/KG)													
ALUMINUM													
ANTIMONY													
ARSENIC													
BARIUM													
BERYLLIUM													
CADMIUM													
CALCIUM													
CHROMIUM													
COBALT													
COPPER													
IRON													
LEAD													
LITHIUM													
MAGNESIUM													
MANGANESE													
MERCURY													
NICKEL													
POTASSIUM													
SELENIUM													
SILVER													
SODIUM													
STRONTIUM													
THALLIUM													
TIN													
TITANIUM													
VANADIUM													
ZINC													
METALS (UG/KG)													
LEAD													
MISCELLANEOUS PARAMETERS (%)													
PERCENT MOISTURE													
MISCELLANEOUS PARAMETERS (MEQ/100)													
CATION EXCHANGE CAPACITY													
MISCELLANEOUS PARAMETERS (MG/KG)													
TOTAL ORGANIC CARBON													
MISCELLANEOUS PARAMETERS (S.U.)													
PH													
PESTICIDES/PCBS (UG/KG)													
AROCLOR-1016													
AROCLOR-1221													
AROCLOR-1232													
AROCLOR-1242													
AROCLOR-1248													
AROCLOR-1254													
AROCLOR-1260													

TABLE A-2

SUBSURFACE SOIL SAMPLE DATA
SWMU 16
NSA CRANE
CRANE, INDIANA

LOCATION	16SB058	16SB059	16SB059	16SB060	16SB060	16SB061	16SB061	16SB062	16SB062	16SB063	16SB063	16SB064	16SB064
SAMPLE ID	16SB0580607	16SB0590206	16SB0590608	16SB0600206	16SB0600609	16SB0610206	16SB0610607	16SB0620206	16SB0620607	16SB0630206	16SB0630608	16SB0640206	16SB0640608
SAMPLE DATE	20040813	20040813	20040813	20040811	20040811	20040811	20040811	20040813	20040813	20040811	20040811	20040811	20040811
ROUND	03	03	03	03	03	03	03	03	03	03	03	03	03
EVENT													
SAMPLE CODE	NORMAL	NORMAL	NORMAL	NORMAL	NORMAL	NORMAL	NORMAL	NORMAL	NORMAL	NORMAL	NORMAL	NORMAL	NORMAL
MATRIX	SO	SO	SO	SO	SO	SO	SO	SO	SO	SO	SO	SO	SO
SAMPLE TYPE	NORMAL	NORMAL	NORMAL	NORMAL	NORMAL	NORMAL	NORMAL	NORMAL	NORMAL	NORMAL	NORMAL	NORMAL	NORMAL
SUBMATRIX	SB	SB	SB	SB	SB	SB	SB	SB	SB	SB	SB	SB	SB
TOP DEPTH	6	2	6	2	6	2	6	2	6	2	6	2	6
BOTTOM DEPTH	7	6	8	6	9	6	7	6	7	6	8	6	8
PETROLEUM HYDROCARBONS (UG/KG)													
DRO (C08-C28)													
TPH (C06-C12)													
SEMIVOLATILES (UG/KG)													
1,2,4,5-TETRACHLOROBENZENE													
1,2,4-TRICHLOROBENZENE													
1,2-DICHLOROBENZENE													
1,3-DICHLOROBENZENE													
1,4-DICHLOROBENZENE													
1,4-NAPHTHOQUINONE													
1,4-PHENYLENEDIAMINE													
1-NAPHTHYLAMINE													
2,2'-OXYBIS(1-CHLOROPROPANE)													
2,3,4,6-TETRACHLOROPHENOL													
2,4,5-TRICHLOROPHENOL													
2,4,6-TRICHLOROPHENOL													
2,4-DICHLOROPHENOL													
2,4-DIMETHYLPHENOL													
2,4-DINITROPHENOL													
2,6-DICHLOROPHENOL													
2-ACETYLAMINOFLUORENE													
2-CHLORONAPHTHALENE													
2-CHLOROPHENOL													
2-METHYLNAPHTHALENE													
2-METHYLPHENOL													
2-NAPHTHYLAMINE													
2-NITROANILINE													
2-NITROPHENOL													
2-PICOLINE													
3&4-METHYLPHENOL													
3,3'-DICHLOROBENZIDINE													
3,3'-DIMETHYLBENZIDINE													
3-METHYLCHOLANTHRENE													
3-NITROANILINE													
4,6-DINITRO-2-METHYLPHENOL													
4-AMINOBIPHENYL													
4-BROMOPHENYL PHENYL ETHER													
4-CHLORO-3-METHYLPHENOL													
4-CHLOROANILINE													
4-CHLOROPHENYL PHENYL ETHER													
4-NITROANILINE													
4-NITROPHENOL													
4-NITROQUINOLINE-1-OXIDE													
5-NITRO-O-TOLUIDINE													
7,12-DIMETHYLBENZ(A)ANTHRACENE													
A,A-DIMETHYLPHENETHYLAMINE													
ACENAPHTHENE													
ACENAPHTHYLENE													
ACETOPHENONE													
ANILINE													
ANTHRACENE													
ARAMITE													
BENZO(A)ANTHRACENE													
BENZO(A)PYRENE													
BENZO(B)FLUORANTHENE													
BENZO(G,H,I)PERYLENE													
BENZO(K)FLUORANTHENE													
BENZYL ALCOHOL													
BIS(2-CHLOROETHOXY)METHANE													
BIS(2-CHLOROETHYL)ETHER													
BIS(2-ETHYLHEXYL)PHTHALATE													
BUTYL BENZYL PHTHALATE													
CHLOROBENZILATE													
CHRYSENE													
DIALLATE													
DIBENZO(A,H)ANTHRACENE													
DIBENZOFURAN													

TABLE A-2

SUBSURFACE SOIL SAMPLE DATA
SWMU 16
NSA CRANE
CRANE, INDIANA

LOCATION	16SB058	16SB059	16SB059	16SB060	16SB060	16SB061	16SB061	16SB062	16SB062	16SB063	16SB063	16SB064	16SB064
SAMPLE ID	16SB0580607	16SB0590206	16SB0590608	16SB0600206	16SB0600609	16SB0610206	16SB0610607	16SB0620206	16SB0620607	16SB0630206	16SB0630608	16SB0640206	16SB0640608
SAMPLE DATE	20040813	20040813	20040813	20040811	20040811	20040811	20040811	20040813	20040813	20040811	20040811	20040811	20040811
ROUND	03	03	03	03	03	03	03	03	03	03	03	03	03
EVENT													
SAMPLE CODE	NORMAL	NORMAL	NORMAL	NORMAL	NORMAL	NORMAL	NORMAL	NORMAL	NORMAL	NORMAL	NORMAL	NORMAL	NORMAL
MATRIX	SO	SO	SO	SO	SO	SO	SO	SO	SO	SO	SO	SO	SO
SAMPLE TYPE	NORMAL	NORMAL	NORMAL	NORMAL	NORMAL	NORMAL	NORMAL	NORMAL	NORMAL	NORMAL	NORMAL	NORMAL	NORMAL
SUBMATRIX	SB	SB	SB	SB	SB	SB	SB	SB	SB	SB	SB	SB	SB
TOP DEPTH	6	2	6	2	6	2	6	2	6	2	6	2	6
BOTTOM DEPTH	7	6	8	6	9	6	7	6	7	6	8	6	8
DIETHYL PHTHALATE													
DIMETHYL PHTHALATE													
DI-N-BUTYL PHTHALATE													
DI-N-OCTYL PHTHALATE													
DIPHENYLAMINE													
ETHYL METHANE SULFONATE													
FLUORANTHENE													
FLUORENE													
HEXACHLOROBENZENE													
HEXACHLOROBUTADIENE													
HEXACHLOROCYCLOPENTADIENE													
HEXACHLOROETHANE													
HEXACHLOROPROPENE													
INDENO(1,2,3-CD)PYRENE													
ISODRIN													
ISOPHORONE													
ISOSAFROLE													
KEPONE													
METHAPYRILENE													
METHYL METHANE SULFONATE													
NAPHTHALENE													
N-NITROSODIETHYLAMINE													
N-NITROSODIMETHYLAMINE													
N-NITROSO-DI-N-BUTYLAMINE													
N-NITROSO-DI-N-PROPYLAMINE													
N-NITROSOMETHYLETHYLAMINE													
N-NITROSOMORPHOLINE													
N-NITROSOPIPERIDINE													
N-NITROSOPYRROLIDINE													
O,O,O-TRIETHYL PHOSPHOROTHIOATE													
O-TOLUIDINE													
PENTACHLOROBENZENE													
PENTACHLOROETHANE													
PENTACHLORONITROBENZENE													
PHENACETIN													
PHENANTHRENE													
PHENOL													
PRONAMIDE													
PYRENE													
PYRIDINE													
SAFROLE													
SOLVENT YELLOW 2													
VOLATILES (UG/KG)													
1,1,1,2-TETRACHLOROETHANE	1.03 U	1.22 U	0.988 U	1.04 UJ	1.02 U	1.09 U	1.2 U	1.01 U	0.968 U	1.19 U	1.3 U	1.09 U	1.24 U
1,1,1-TRICHLOROETHANE	1.03 U	1.22 U	0.988 U	1.04 UJ	1.02 U	1.09 U	1.2 U	1.01 U	0.968 U	1.19 U	1.3 U	1.09 U	1.24 U
1,1,2,2-TETRACHLOROETHANE	1.03 U	1.22 U	0.988 U	1.04 UJ	1.02 U	1.09 U	1.2 U	1.01 U	0.968 U	1.19 U	1.3 U	1.09 U	1.24 U
1,1,2-TRICHLOROETHANE	1.03 U	1.22 U	0.988 U	1.04 UJ	1.02 U	1.09 U	1.2 U	1.01 U	0.968 U	1.19 U	1.3 U	1.09 U	1.24 U
1,1,2-TRICHLOROTRIFLUOROETHANE													
1,1-DICHLOROETHANE	1.03 U	1.22 U	0.988 U	1.04 UJ	1.02 U	1.09 U	1.2 U	1.01 U	0.968 U	1.19 U	1.3 U	1.09 U	1.24 U
1,1-DICHLOROETHENE	1.03 U	1.22 U	0.988 U	1.04 UJ	1.02 U	1.09 U	1.2 U	1.01 U	0.968 U	1.19 U	1.3 U	1.09 U	1.24 U
1,2,3-TRICHLOROBENZENE													
1,2,3-TRICHLOROPROPANE	1.03 U	1.22 U	0.988 U	1.04 UJ	1.02 U	1.09 U	1.2 U	1.01 U	0.968 U	1.19 U	1.3 U	1.09 U	1.24 U
1,2,4-TRICHLOROBENZENE													
1,2-DIBROMO-3-CHLOROPROPANE	1.03 U	1.22 U	0.988 U	1.04 UJ	1.02 UR	1.09 UR	1.2 U	1.01 U	0.968 U	1.19 UR	1.3 UR	1.09 UR	1.24 UR
1,2-DIBROMOETHANE	1.03 U	1.22 U	0.988 U	1.04 UJ	1.02 U	1.09 U	1.2 U	1.01 U	0.968 U	1.19 U	1.3 U	1.09 U	1.24 U
1,2-DICHLOROBENZENE													
1,2-DICHLOROETHANE	1.03 U	1.22 U	0.988 U	1.04 UJ	1.02 U	1.09 U	1.2 U	1.01 U	0.968 U	1.19 U	1.3 U	1.09 U	1.24 U
1,2-DICHLOROPROPANE	1.03 U	1.22 U	0.988 U	1.04 UJ	1.02 U	1.09 U	1.2 U	1.01 U	0.968 U	1.19 U	1.3 U	1.09 U	1.24 U
1,3-DICHLOROBENZENE													
1,4-DICHLOROBENZENE													
1,4-DIOXANE	97.2 U	136 U	98.8 U	107 UJ	106 U	124 U	120 U	101 U	103 U	106 U	108 U	131 U	108 U
2-BUTANONE	1.03 U	1.22 U	0.988 U	2 J	1.02 UR	1.09 UR	1.2 U	1.01 U	0.968 U	1.19 UR	1.3 UR	1.09 UR	1.24 UR
2-HEXANONE	1.03 U	1.22 U	0.988 U	1.04 UJ	1.02 U	1.09 U	1.2 U	1.01 U	0.968 U	1.19 U	1.3 U	1.09 U	1.24 U
3-CHLOROPROPENE	1.03 U	1.22 U	0.988 U	1.04 UJ	1.02 U	1.09 U	1.2 U	1.01 U	0.968 U	1.19 U	1.3 U	1.09 U	1.24 U
4-METHYL-2-PENTANONE	1.03 U	1.22 U	0.988 U	1.04 UJ	1.02 U	1.09 U	1.2 U	1.01 U	0.968 U	1.19 U	1.3 U	1.09 U	1.24 U
ACETONE	1.03 U	1.22 U	0.988 U	19 U	24 U	3 U	5 U	1.01 U	0.968 U	1 U	1.3 UR	2 U	7 U
ACETONITRILE	38.9 U	54.5 U	39.5 U	42.6 UJ	42.4 U	49.8 U	47.9 U	40.5 U	41.2 U	42.4 U	43.1 U	52.3 U	43.2 U

TABLE A-2

SUBSURFACE SOIL SAMPLE DATA
SWMU 16
NSA CRANE
CRANE, INDIANA

LOCATION	16SB058	16SB059	16SB059	16SB060	16SB060	16SB061	16SB061	16SB062	16SB062	16SB063	16SB063	16SB064	16SB064
SAMPLE ID	16SB0580607	16SB0590206	16SB0590608	16SB0600206	16SB0600609	16SB0610206	16SB0610607	16SB0620206	16SB0620607	16SB0630206	16SB0630608	16SB0640206	16SB0640608
SAMPLE DATE	20040813	20040813	20040813	20040811	20040811	20040811	20040811	20040813	20040813	20040811	20040811	20040811	20040811
ROUND	03	03	03	03	03	03	03	03	03	03	03	03	03
EVENT													
SAMPLE CODE	NORMAL	NORMAL	NORMAL	NORMAL	NORMAL	NORMAL	NORMAL	NORMAL	NORMAL	NORMAL	NORMAL	NORMAL	NORMAL
MATRIX	SO	SO	SO	SO	SO	SO	SO	SO	SO	SO	SO	SO	SO
SAMPLE TYPE	NORMAL	NORMAL	NORMAL	NORMAL	NORMAL	NORMAL	NORMAL	NORMAL	NORMAL	NORMAL	NORMAL	NORMAL	NORMAL
SUBMATRIX	SB	SB	SB	SB	SB	SB	SB	SB	SB	SB	SB	SB	SB
TOP DEPTH	6	2	6	2	6	2	6	2	6	2	6	2	6
BOTTOM DEPTH	7	6	8	6	9	6	7	6	7	6	8	6	8
ACROLEIN	1.03 UR	1.22 UR	0.988 UR	1.04 UR	1.02 UR	1.09 UR	1.2 UR	1.01 UR	0.968 UR	1.19 UR	1.3 UR	1.09 UR	1.24 UR
ACRYLONITRILE	1.03 U	1.22 U	0.988 U	1.04 UJ	1.02 UR	1.09 UR	1.2 U	1.01 U	0.968 U	1.19 UR	1.3 UR	1.09 UR	1.24 UR
BENZENE	1.03 U	1.22 U	0.988 U	1.04 UJ	1.02 U	1.09 U	1.2 U	1.01 U	0.968 U	1.19 U	1.3 U	1.09 U	1.24 U
BROMODICHLOROMETHANE	1.03 U	1.22 U	0.988 U	1.04 UJ	1.02 U	1.09 U	1.2 U	1.01 U	0.968 U	1.19 U	1.3 U	1.09 U	1.24 U
BROMOFORM	1.03 U	1.22 U	0.988 U	1.04 UJ	1.02 U	1.09 U	1.2 U	1.01 U	0.968 U	1.19 U	1.3 U	1.09 U	1.24 U
BROMOMETHANE	1.03 U	1.22 U	0.988 U	1.04 UJ	1.02 U	1.09 U	1.2 UJ	1.01 U	0.968 U	1.19 U	1.3 U	1.09 U	1.24 U
CARBON DISULFIDE	1.03 U	1.22 U	0.988 U	1.04 UJ	1.02 U	1.09 U	1.2 U	1.01 U	0.968 U	1.19 U	1.3 U	1.09 U	1.24 U
CARBON TETRACHLORIDE	1.03 U	1.22 U	0.988 U	1.04 UJ	1.02 U	1.09 U	1.2 U	1.01 U	0.968 U	1.19 U	1.3 U	1.09 U	1.24 U
CHLOROBENZENE	1.03 U	1.22 U	0.988 U	1.04 UJ	1.02 U	1.09 U	1.2 U	1.01 U	0.968 U	1.19 U	1.3 U	1.09 U	1.24 U
CHLORODIBROMOMETHANE	1.03 U	1.22 U	0.988 U	1.04 UJ	1.02 U	1.09 U	1.2 U	1.01 U	0.968 U	1.19 U	1.3 U	1.09 U	1.24 U
CHLOROETHANE	1.03 U	1.22 U	0.988 U	1.04 UJ	1.02 U	1.09 U	1.2 U	1.01 U	0.968 U	1.19 U	1.3 U	1.09 U	1.24 U
CHLOROFORM	1.03 U	1.22 U	0.988 U	1.04 UJ	1.02 U	1.09 U	1.2 U	1.01 U	0.968 U	1.19 U	1.3 U	1.09 U	1.24 U
CHLOROMETHANE	1.03 U	1.22 U	0.988 U	1.04 UJ	1.02 U	1.09 U	1.2 U	1.01 U	0.968 U	1.19 U	1.3 U	1.09 U	1.24 U
CHLOROPRENE	1.03 U	1.22 U	0.988 U	1.04 UJ	1.02 U	1.09 U	1.2 U	1.01 U	0.968 U	1.19 U	1.3 U	1.09 U	1.24 U
CIS-1,2-DICHLOROETHENE	1.03 U	1.22 U	0.988 U	8 J	4	86	11	1.01 U	0.968 U	1.19 U	1.3 U	1.09 U	1.24 U
CIS-1,3-DICHLOROPROPENE	1.03 U	1.22 U	0.988 U	1.04 UJ	1.02 U	1.09 U	1.2 U	1.01 U	0.968 U	1.19 U	1.3 U	1.09 U	1.24 U
CYCLOHEXANE													
DIBROMOMETHANE	1.03 U	1.22 U	0.988 U	1.04 UJ	1.02 U	1.09 U	1.2 U	1.01 U	0.968 U	1.19 U	1.3 U	1.09 U	1.24 U
DICHLORODIFLUOROMETHANE	1.03 U	1.22 J	0.988 U	22 J	1.02 U	2 J	1.2 U	1.01 U	0.968 U	4 J	1.3 U	1.1 J	3 J
ETHYL METHACRYLATE	1.03 U	1.22 U	0.988 U	1.04 UJ	1.02 U	1.09 U	1.2 U	1.01 U	0.968 U	1.19 U	1.3 U	1.09 U	1.24 U
ETHYLBENZENE	1.03 U	1.22 U	0.988 U	1.04 UJ	1.02 U	1.09 U	1.2 U	1.01 U	0.968 U	1.19 U	1.3 U	1.09 U	1.24 U
ISOBUTANOL	38.9 U	54.5 U	39.5 U	42.6 UJ	42.4 U	49.8 U	47.9 U	40.5 U	41.2 U	42.4 U	43.1 U	52.3 U	43.2 U
ISOPROPYLBENZENE													
METHACRYLONITRILE	1.03 U	1.22 U	0.988 U	1.04 UJ	1.02 UR	1.09 UR	1.2 U	1.01 U	0.968 U	1.19 UR	1.3 UR	1.09 UR	1.24 UR
METHYL ACETATE													
METHYL IODIDE	1.03 U	1.22 U	0.988 U	1.04 UJ	1.02 U	1.09 U	1.2 U	1.01 U	0.968 U	1.19 U	1.3 U	1.09 U	1.24 U
METHYL METHACRYLATE	1.03 U	1.22 U	0.988 U	1.04 UJ	1.02 U	1.09 U	1.2 U	1.01 U	0.968 U	1.19 U	1.3 U	1.09 U	1.24 U
METHYL TERT-BUTYL ETHER													
METHYLENE CHLORIDE	1.03 UJ	1.22 UJ	0.988 UJ	16 U	1.02 U	1.09 U	3 U	1.01 UJ	0.968 UJ	1.19 U	1.3 U	1.09 U	1.24 U
PROPIONITRILE	38.9 U	54.5 U	39.5 U	42.6 UJ	42.4 U	49.8 U	47.9 U	40.5 U	41.2 U	42.4 U	43.1 U	52.3 U	43.2 U
STYRENE	1.03 U	1.22 U	0.988 U	1.04 UJ	1.02 U	1.09 U	1.2 U	1.01 U	0.968 U	1.19 U	1.3 U	1.09 U	1.24 U
TETRACHLOROETHENE	1.03 U	1.22 U	0.988 U	1.04 UJ	1.02 U	1.09 U	1.2 U	1.01 U	0.968 U	1.19 U	1.3 U	1.09 U	1.24 U
TOLUENE	1.03 U	1.22 U	0.988 U	1.04 UJ	1.02 U	1.09 U	1.2 U	1.01 U	0.968 U	1.19 U	1.3 U	1.09 U	1.24 U
TOTAL XYLENES	1.03 U	1.22 U	0.988 U	1.04 UJ	1.02 U	1.09 U	1.2 U	1.01 U	0.968 U	1.19 U	1.3 U	1.09 U	1.24 U
TRANS-1,2-DICHLOROETHENE	1.03 U	1.22 U	0.988 U	1.04 UJ	1.02 U	5	1.2 U	1.01 U	0.968 U	1.19 U	1.3 U	1.09 U	1.24 U
TRANS-1,3-DICHLOROPROPENE	1.03 U	1.22 U	0.988 U	1.04 UJ	1.02 U	1.09 U	1.2 U	1.01 U	0.968 U	1.19 U	1.3 U	1.09 U	1.24 U
TRANS-1,4-DICHLORO-2-BUTENE	1.03 U	1.22 U	0.988 U	1.04 UJ	1.02 U	1.09 U	1.2 U	1.01 U	0.968 U	1.19 U	1.3 U	1.09 U	1.24 U
TRICHLOROETHENE	28	190	9	28 J	1.02 U	160	14	5	6	1.19 U	1.3 U	1.09 U	1.24 U
TRICHLOROFLUOROMETHANE	1.03 U	1.22 U	0.988 U	2 J	1.02 U	1.09 U	1.2 U	1.01 U	0.968 U	1.19 U	1.3 U	1.09 U	1.24 U
VINYL ACETATE	1.03 U	1.22 U	0.988 U	1.04 UJ	1.02 U	1.09 U	1.2 U	1.01 U	0.968 U	1.19 U	1.3 U	1.09 U	1.24 U
VINYL CHLORIDE	1.03 U	1.22 U	0.988 U	1.04 UJ	1.02 U	1.09 U	1.2 U	1.01 U	0.968 U	1.19 U	1.3 U	1.09 U	1.24 U

TABLE A-2

SUBSURFACE SOIL SAMPLE DATA
SWMU 16
NSA CRANE
CRANE, INDIANA

LOCATION	16SB065	16SB065	16SB066	16SB066	16SB067	16SB067	16SB068	16SB068	16SB068	16SB069	16SB069	16SB070	16SB070
SAMPLE ID	16SB0650206	16SB0650608	16SB0660206	16SB0660608	16SB0670206	16SB0670609	16SB0680206	16SB0680206-D	16SB0680609	16SB0690206	16SB0690607	16SB0700206	16SB0700607
SAMPLE DATE	20040811	20040811	20040812	20040812	20040812	20040812	20040812	20040812	20040812	20040812	20040812	20040812	20040812
ROUND	03	03	03	03	03	03	03	03	03	03	03	03	03
EVENT													
SAMPLE CODE	NORMAL	NORMAL	NORMAL	NORMAL	NORMAL	NORMAL	NORMAL	DUP	NORMAL	NORMAL	NORMAL	NORMAL	NORMAL
MATRIX	SO	SO	SO	SO	SO	SO	SO	SO	SO	SO	SO	SO	SO
SAMPLE TYPE	NORMAL	NORMAL	NORMAL	NORMAL	NORMAL	NORMAL	NORMAL	NORMAL	NORMAL	NORMAL	NORMAL	NORMAL	NORMAL
SUBMATRIX	SB	SB	SB	SB	SB	SB	SB	SB	SB	SB	SB	SB	SB
TOP DEPTH	2	6	2	6	2	6	2	2	6	2	6	2	6
BOTTOM DEPTH	6	8	6	8	6	9	6	6	9	6	7	6	7
EXPLOSIVES (MG/KG)													
1,3,5-TRINITROBENZENE													
1,3-DINITROBENZENE													
2,4,6-TRINITROTOLUENE													
2,4-DINITROTOLUENE													
2,6-DINITROTOLUENE													
2-AMINO-4,6-DINITROTOLUENE													
2-NITROTOLUENE													
3-NITROTOLUENE													
4-AMINO-2,6-DINITROTOLUENE													
4-NITROTOLUENE													
HMX													
NITROBENZENE													
PICRAMIC ACID													
PICRIC ACID													
RDX													
TETRYL													
HERBICIDES (UG/KG)													
HEXACHLOROPHENE													
PENTACHLOROPHENOL													
METALS (MG/KG)													
ALUMINUM													
ANTIMONY													
ARSENIC													
BARIUM													
BERYLLIUM													
CADMIUM													
CALCIUM													
CHROMIUM													
COBALT													
COPPER													
IRON													
LEAD													
LITHIUM													
MAGNESIUM													
MANGANESE													
MERCURY													
NICKEL													
POTASSIUM													
SELENIUM													
SILVER													
SODIUM													
STRONTIUM													
THALLIUM													
TIN													
TITANIUM													
VANADIUM													
ZINC													
METALS (UG/KG)													
LEAD													
MISCELLANEOUS PARAMETERS (%)													
PERCENT MOISTURE													
MISCELLANEOUS PARAMETERS (MEQ/100)													
CATION EXCHANGE CAPACITY													
MISCELLANEOUS PARAMETERS (MG/KG)													
TOTAL ORGANIC CARBON													
MISCELLANEOUS PARAMETERS (S.U.)													
PH													
PESTICIDES/PCBS (UG/KG)													
AROCLOR-1016													
AROCLOR-1221													
AROCLOR-1232													
AROCLOR-1242													
AROCLOR-1248													
AROCLOR-1254													
AROCLOR-1260													

TABLE A-2

SUBSURFACE SOIL SAMPLE DATA
SWMU 16
NSA CRANE
CRANE, INDIANA

LOCATION	16SB065	16SB065	16SB066	16SB066	16SB067	16SB067	16SB068	16SB068	16SB068	16SB069	16SB069	16SB070	16SB070
SAMPLE ID	16SB0650206	16SB0650608	16SB0660206	16SB0660608	16SB0670206	16SB0670609	16SB0680206	16SB0680206-D	16SB0680609	16SB0690206	16SB0690607	16SB0700206	16SB0700607
SAMPLE DATE	20040811	20040811	20040812	20040812	20040812	20040812	20040812	20040812	20040812	20040812	20040812	20040812	20040812
ROUND	03	03	03	03	03	03	03	03	03	03	03	03	03
EVENT													
SAMPLE CODE	NORMAL	NORMAL	NORMAL	NORMAL	NORMAL	NORMAL	NORMAL	DUP	NORMAL	NORMAL	NORMAL	NORMAL	NORMAL
MATRIX	SO	SO	SO	SO	SO	SO	SO	SO	SO	SO	SO	SO	SO
SAMPLE TYPE	NORMAL	NORMAL	NORMAL	NORMAL	NORMAL	NORMAL	NORMAL	NORMAL	NORMAL	NORMAL	NORMAL	NORMAL	NORMAL
SUBMATRIX	SB	SB	SB	SB	SB	SB	SB	SB	SB	SB	SB	SB	SB
TOP DEPTH	2	6	2	6	2	6	2	2	6	2	6	2	6
BOTTOM DEPTH	6	8	6	8	6	9	6	6	9	6	7	6	7
PETROLEUM HYDROCARBONS (UG/KG)													
DRO (C08-C28)													
TPH (C06-C12)													
SEMIVOLATILES (UG/KG)													
1,2,4,5-TETRACHLOROBENZENE													
1,2,4-TRICHLOROBENZENE													
1,2-DICHLOROBENZENE													
1,3-DICHLOROBENZENE													
1,4-DICHLOROBENZENE													
1,4-NAPHTHOQUINONE													
1,4-PHENYLENEDIAMINE													
1-NAPHTHYLAMINE													
2,2'-OXYBIS(1-CHLOROPROPANE)													
2,3,4,6-TETRACHLOROPHENOL													
2,4,5-TRICHLOROPHENOL													
2,4,6-TRICHLOROPHENOL													
2,4-DICHLOROPHENOL													
2,4-DIMETHYLPHENOL													
2,4-DINITROPHENOL													
2,6-DICHLOROPHENOL													
2-ACETYLAMINOFLUORENE													
2-CHLORONAPHTHALENE													
2-CHLOROPHENOL													
2-METHYLNAPHTHALENE													
2-METHYLPHENOL													
2-NAPHTHYLAMINE													
2-NITROANILINE													
2-NITROPHENOL													
2-PICOLINE													
3&4-METHYLPHENOL													
3,3'-DICHLOROBENZIDINE													
3,3'-DIMETHYLBENZIDINE													
3-METHYLCHOLANTHRENE													
3-NITROANILINE													
4,6-DINITRO-2-METHYLPHENOL													
4-AMINOBIPHENYL													
4-BROMOPHENYL PHENYL ETHER													
4-CHLORO-3-METHYLPHENOL													
4-CHLOROANILINE													
4-CHLOROPHENYL PHENYL ETHER													
4-NITROANILINE													
4-NITROPHENOL													
4-NITROQUINOLINE-1-OXIDE													
5-NITRO-O-TOLUIDINE													
7,12-DIMETHYLBENZ(A)ANTHRACENE													
A,A-DIMETHYLPHENETHYLAMINE													
ACENAPHTHENE													
ACENAPHTHYLENE													
ACETOPHENONE													
ANILINE													
ANTHRACENE													
ARAMITE													
BENZO(A)ANTHRACENE													
BENZO(A)PYRENE													
BENZO(B)FLUORANTHENE													
BENZO(G,H,I)PERYLENE													
BENZO(K)FLUORANTHENE													
BENZYL ALCOHOL													
BIS(2-CHLOROETHOXY)METHANE													
BIS(2-CHLOROETHYL)ETHER													
BIS(2-ETHYLHEXYL)PHTHALATE													
BUTYL BENZYL PHTHALATE													
CHLOROBENZILATE													
CHRYSENE													
DIALLATE													
DIBENZO(A,H)ANTHRACENE													
DIBENZOFURAN													

TABLE A-2

SUBSURFACE SOIL SAMPLE DATA
SWMU 16
NSA CRANE
CRANE, INDIANA

LOCATION	16SB065	16SB065	16SB066	16SB066	16SB067	16SB067	16SB068	16SB068	16SB068	16SB069	16SB069	16SB070	16SB070
SAMPLE ID	16SB0650206	16SB0650608	16SB0660206	16SB0660608	16SB0670206	16SB0670609	16SB0680206	16SB0680206-D	16SB0680609	16SB0690206	16SB0690607	16SB0700206	16SB0700607
SAMPLE DATE	20040811	20040811	20040812	20040812	20040812	20040812	20040812	20040812	20040812	20040812	20040812	20040812	20040812
ROUND	03	03	03	03	03	03	03	03	03	03	03	03	03
EVENT													
SAMPLE CODE	NORMAL	NORMAL	NORMAL	NORMAL	NORMAL	NORMAL	NORMAL	DUP	NORMAL	NORMAL	NORMAL	NORMAL	NORMAL
MATRIX	SO	SO	SO	SO	SO	SO	SO	SO	SO	SO	SO	SO	SO
SAMPLE TYPE	NORMAL	NORMAL	NORMAL	NORMAL	NORMAL	NORMAL	NORMAL	NORMAL	NORMAL	NORMAL	NORMAL	NORMAL	NORMAL
SUBMATRIX	SB	SB	SB	SB	SB	SB	SB	SB	SB	SB	SB	SB	SB
TOP DEPTH	2	6	2	6	2	6	2	2	6	2	6	2	6
BOTTOM DEPTH	6	8	6	8	6	9	6	6	9	6	7	6	7
DIETHYL PHTHALATE													
DIMETHYL PHTHALATE													
DI-N-BUTYL PHTHALATE													
DI-N-OCTYL PHTHALATE													
DIPHENYLAMINE													
ETHYL METHANE SULFONATE													
FLUORANTHENE													
FLUORENE													
HEXACHLOROBENZENE													
HEXACHLOROBUTADIENE													
HEXACHLOROCYCLOPENTADIENE													
HEXACHLOROETHANE													
HEXACHLOROPROPENE													
INDENO(1,2,3-CD)PYRENE													
ISODRIN													
ISOPHORONE													
ISOSAFROLE													
KEPONE													
METHAPYRILENE													
METHYL METHANE SULFONATE													
NAPHTHALENE													
N-NITROSODIETHYLAMINE													
N-NITROSODIMETHYLAMINE													
N-NITROSO-DI-N-BUTYLAMINE													
N-NITROSO-DI-N-PROPYLAMINE													
N-NITROSOMETHYLETHYLAMINE													
N-NITROSOMORPHOLINE													
N-NITROSOPIPERIDINE													
N-NITROSOPYRROLIDINE													
O,O,O-TRIETHYL PHOSPHOROTHIOATE													
O-TOLUIDINE													
PENTACHLOROBENZENE													
PENTACHLOROETHANE													
PENTACHLORONITROBENZENE													
PHENACETIN													
PHENANTHRENE													
PHENOL													
PRONAMIDE													
PYRENE													
PYRIDINE													
SAFROLE													
SOLVENT YELLOW 2													
VOLATILES (UG/KG)													
1,1,1,2-TETRACHLOROETHANE	1.27 U	1.45 U	1.23 U	0.92 U	1.09 U	1.21 U	1.02 U	1 U	1.12 U	1.05 U	1.35 U	1.2 U	0.978 U
1,1,1-TRICHLOROETHANE	1.27 U	1.45 U	1.23 U	0.92 U	1.09 U	1.21 U	1.02 U	1 U	1.12 U	1.05 U	1.35 U	1.2 U	0.978 U
1,1,2,2-TETRACHLOROETHANE	1.27 U	1.45 U	1.23 U	0.92 U	1.09 U	1.21 U	1.02 U	1 U	1.12 U	1.05 U	1.35 U	1.2 U	0.978 U
1,1,2-TRICHLOROETHANE	1.27 U	1.45 U	1.23 U	0.92 U	1.09 U	1.21 U	1.02 U	1 U	1.12 U	1.05 U	1.35 U	1.2 U	0.978 U
1,1,2-TRICHLOROTRIFLUOROETHANE													
1,1-DICHLOROETHANE	1.27 U	1.45 U	1.23 U	0.92 U	1.09 U	1.21 U	1.02 U	1 U	1.12 U	1.05 U	1.35 U	1.2 U	0.978 U
1,1-DICHLOROETHENE	1.27 U	1.45 U	1.23 U	0.92 U	1.09 U	1.21 U	1.02 U	1 U	1.12 U	1.05 U	1.35 U	1.2 U	0.978 U
1,2,3-TRICHLOROBENZENE													
1,2,3-TRICHLOROPROPANE	1.27 U	1.45 U	1.23 U	0.92 U	1.09 U	1.21 U	1.02 U	1 U	1.12 U	1.05 U	1.35 U	1.2 U	0.978 U
1,2,4-TRICHLOROBENZENE													
1,2-DIBROMO-3-CHLOROPROPANE	1.27 UR	1.45 UR	1.23 U	0.92 U	1.09 U	1.21 U	1.02 U	1 U	1.12 U	1.05 U	1.35 U	1.2 U	0.978 U
1,2-DIBROMOETHANE	1.27 U	1.45 U	1.23 U	0.92 U	1.09 U	1.21 U	1.02 UJ	1 U	1.12 U	1.05 U	1.35 UJ	1.2 U	0.978 UJ
1,2-DICHLOROBENZENE													
1,2-DICHLOROETHANE	1.27 U	1.45 U	1.23 U	0.92 U	1.09 U	1.21 U	1.02 U	1 U	1.12 U	1.05 U	1.35 U	1.2 U	0.978 U
1,2-DICHLOROPROPANE	1.27 U	1.45 U	1.23 U	0.92 U	1.09 U	1.21 U	1.02 U	1 U	1.12 U	1.05 U	1.35 U	1.2 U	0.978 U
1,3-DICHLOROBENZENE													
1,4-DICHLOROBENZENE													
1,4-DIOXANE	113 U	119 U	99.8 U	123 U	98.7 U	105 U	101 U	100 U	97.8 U	112 U	116 U	125 U	126 U
2-BUTANONE	1.27 UR	1.45 UR	1.23 U	1 J	1.09 U	1.21 U	1.02 U	1 U	1.12 U	1.05 U	1.35 U	1.2 U	0.978 U
2-HEXANONE	1.27 U	1.45 U	1.23 U	0.92 U	1.09 U	1.21 U	1.02 U	1 U	1.12 U	1.05 U	1.35 U	1.2 U	0.978 U
3-CHLOROPROPENE	1.27 U	1.45 U	1.23 U	0.92 U	1.09 U	1.21 U	1.02 U	1 U	1.12 U	1.05 U	1.35 U	1.2 U	0.978 U
4-METHYL-2-PENTANONE	1.27 U	1.45 U	1.23 U	0.92 U	1.09 U	1.21 U	1.02 U	1 U	1.12 U	1.05 U	1.35 U	1.2 U	0.978 U
ACETONE	72 J	6 U	6 U	21 U	6 BU	8 U	7 BU	2 J	5 BU	5 U	6 BU	2 U	5 U
ACETONITRILE	45.1 U	47.6 U	39.9 UJ	49.2 UJ	39.5 UJ	42.1 UJ	40.3 UJ	40 U	39.1 UJ	44.9 UJ	46.5 UJ	49.8 U	50.3 U

TABLE A-2

SUBSURFACE SOIL SAMPLE DATA
SWMU 16
NSA CRANE
CRANE, INDIANA

LOCATION	16SB065	16SB065	16SB066	16SB066	16SB067	16SB067	16SB068	16SB068	16SB068	16SB069	16SB069	16SB070	16SB070
SAMPLE ID	16SB0650206	16SB0650608	16SB0660206	16SB0660608	16SB0670206	16SB0670609	16SB0680206	16SB0680206-D	16SB0680609	16SB0690206	16SB0690607	16SB0700206	16SB0700607
SAMPLE DATE	20040811	20040811	20040812	20040812	20040812	20040812	20040812	20040812	20040812	20040812	20040812	20040812	20040812
ROUND	03	03	03	03	03	03	03	03	03	03	03	03	03
EVENT													
SAMPLE CODE	NORMAL	NORMAL	NORMAL	NORMAL	NORMAL	NORMAL	NORMAL	DUP	NORMAL	NORMAL	NORMAL	NORMAL	NORMAL
MATRIX	SO	SO	SO	SO	SO	SO	SO	SO	SO	SO	SO	SO	SO
SAMPLE TYPE	NORMAL	NORMAL	NORMAL	NORMAL	NORMAL	NORMAL	NORMAL	NORMAL	NORMAL	NORMAL	NORMAL	NORMAL	NORMAL
SUBMATRIX	SB	SB	SB	SB	SB	SB	SB	SB	SB	SB	SB	SB	SB
TOP DEPTH	2	6	2	6	2	6	2	2	6	2	6	2	6
BOTTOM DEPTH	6	8	6	8	6	9	6	6	9	6	7	6	7
ACROLEIN	1.27 UR	1.45 UR	1.23 UR	0.92 UR	1.09 UR	1.21 UR	1.02 UR	1 UR	1.12 UR	1.05 UR	1.35 UR	1.2 UR	0.978 UR
ACRYLONITRILE	1.27 UR	1.45 UR	1.23 U	0.92 U	1.09 U	1.21 U	1.02 U	1 U	1.12 U	1.05 U	1.35 U	1.2 U	0.978 U
BENZENE	1.27 U	1.45 U	1.23 U	0.92 U	1.09 U	1.21 U	1.02 U	1 U	1.12 U	1.05 U	1.35 U	1.2 U	0.978 U
BROMODICHLOROMETHANE	1.27 U	1.45 U	1.23 U	0.92 U	1.09 U	1.21 U	1.02 U	1 U	1.12 U	1.05 U	1.35 U	1.2 U	0.978 U
BROMOFORM	1.27 U	1.45 U	1.23 U	0.92 U	1.09 U	1.21 U	1.02 U	1 U	1.12 U	1.05 U	1.35 U	1.2 U	0.978 U
BROMOMETHANE	1.27 U	1.45 U	1.23 UJ	0.92 UJ	1.09 UJ	1.21 UJ	1.02 UJ	1 U	1.12 UJ	1.05 UJ	1.35 UJ	1.2 UJ	0.978 UJ
CARBON DISULFIDE	2 J	1.45 U	1.23 U	0.92 U	1.09 U	1.21 U	1.02 U	1 U	1.12 U	1.05 U	1.35 U	1.2 U	0.978 U
CARBON TETRACHLORIDE	1.27 U	1.45 U	1.23 U	0.92 U	1.09 U	1.21 U	1.02 U	1 U	1.12 U	1.05 U	1.35 U	1.2 U	0.978 U
CHLOROBENZENE	1.27 U	1.45 U	1.23 U	0.92 U	1.09 U	1.21 U	1.02 U	1 U	1.12 U	1.05 U	1.35 U	1.2 U	0.978 U
CHLORODIBROMOMETHANE	1.27 U	1.45 U	1.23 U	0.92 U	1.09 U	1.21 U	1.02 U	1 U	1.12 U	1.05 U	1.35 U	1.2 U	0.978 U
CHLOROETHANE	1.27 U	1.45 U	1.23 U	0.92 U	1.09 U	1.21 U	1.02 U	1 U	1.12 U	1.05 U	1.35 U	1.2 U	0.978 U
CHLOROFORM	1.27 U	1.45 U	1.23 U	0.92 U	1.09 U	1.21 U	1.02 U	1 U	1.12 U	1.05 U	1.35 U	1.2 U	0.978 U
CHLOROMETHANE	1.27 U	1.45 U	1.23 U	0.92 U	1.09 U	1.21 U	1.02 U	1 U	1.12 U	1.05 U	1.35 U	1.2 U	0.978 U
CHLOROPRENE	1.27 U	1.45 U	1.23 U	0.92 U	1.09 U	1.21 U	1.02 U	1 U	1.12 U	1.05 U	1.35 U	1.2 U	0.978 U
CIS-1,2-DICHLOROETHENE	24	27	23	1 J	1.09 U	1.21 U	7 J	14 J	5	1.05 U	1.35 U	1.2 U	2 J
CIS-1,3-DICHLOROPROPENE	1.27 U	1.45 U	1.23 U	0.92 U	1.09 U	1.21 U	1.02 U	1 U	1.12 U	1.05 U	1.35 U	1.2 U	0.978 U
CYCLOHEXANE													
DIBROMOMETHANE	1.27 U	1.45 U	1.23 U	0.92 U	1.09 U	1.21 U	1.02 U	1 U	1.12 U	1.05 U	1.35 U	1.2 U	0.978 U
DICHLORODIFLUOROMETHANE	5	1.45 U	5 J	5 J	1.09 U	16 J	1.02 U	1 U	1.12 U	1.05 UJ	1.35 U	1.2 U	0.978 U
ETHYL METHACRYLATE	1.27 U	1.45 U	1.23 U	0.92 U	1.09 U	1.21 U	1.02 U	1 U	1.12 U	1.05 U	1.35 U	1.2 U	0.978 U
ETHYLBENZENE	1.27 U	1.45 U	1.23 U	0.92 U	1.09 U	1.21 U	1.02 U	1 U	1.12 U	1.05 U	1.35 U	1.2 U	0.978 U
ISOBUTANOL	45.1 U	47.6 U	39.9 U	49.2 U	39.5 U	42.1 U	40.3 U	40 U	39.1 U	44.9 U	46.5 U	49.8 U	50.3 U
ISOPROPYLBENZENE													
METHACRYLONITRILE	1.27 UR	1.45 UR	1.23 U	0.92 U	1.09 U	1.21 U	1.02 U	1 U	1.12 U	1.05 U	1.35 U	1.2 U	0.978 U
METHYL ACETATE													
METHYL IODIDE	1.27 U	1.45 U	1.23 U	0.92 U	1.09 U	1.21 U	1.02 U	1 U	1.12 U	1.05 U	1.35 U	1.2 U	0.978 U
METHYL METHACRYLATE	1.27 U	1.45 U	1.23 U	0.92 U	1.09 U	1.21 U	1.02 U	1 U	1.12 U	1.05 U	1.35 U	1.2 U	0.978 U
METHYL TERT-BUTYL ETHER													
METHYLENE CHLORIDE	1.27 U	1.45 U	5 U	5 U	2 BU	5 U	1.02 U	1 UJ	2 BU	2 U	1.35 U	2 U	0.978 U
PROPIONITRILE	45.1 U	47.6 U	39.9 U	49.2 U	39.5 U	42.1 U	40.3 U	40 U	39.1 U	44.9 U	46.5 U	49.8 U	50.3 U
STYRENE	1.27 U	1.45 U	1.23 U	0.92 U	1.09 U	1.21 U	1.02 U	1 U	1.12 U	1.05 U	1.35 U	1.2 U	0.978 U
TETRACHLOROETHENE	1.27 U	1.45 U	1.23 U	0.92 U	1.09 U	1.21 U	1.02 U	1 U	1.12 U	1.05 U	1.35 U	1.2 U	0.978 U
TOLUENE	1.27 U	1.45 U	1.23 U	0.92 U	1.09 U	1.21 U	1.02 U	1 U	1.12 U	1.05 U	1.35 U	1.2 U	0.978 U
TOTAL XYLENES	1.27 U	1.45 U	1.23 U	0.92 U	1.09 U	1.21 U	1.02 U	1 U	1.12 U	1.05 U	1.35 U	1.2 U	0.978 U
TRANS-1,2-DICHLOROETHENE	3 J	4 J	1.23 U	0.92 U	1.09 U	1.21 U	1.02 U	1 U	1.12 U	1.05 U	1.35 U	1.2 U	0.978 U
TRANS-1,3-DICHLOROPROPENE	1.27 U	1.45 U	1.23 U	0.92 U	1.09 U	1.21 U	1.02 U	1 U	1.12 U	1.05 U	1.35 U	1.2 U	0.978 U
TRANS-1,4-DICHLORO-2-BUTENE	1.27 U	1.45 U	1.23 U	0.92 U	1.09 U	1.21 U	1.02 U	1 U	1.12 U	1.05 U	1.35 U	1.2 U	0.978 U
TRICHLOROETHENE	3 J	17	9	0.92 U	2 J	2 J	1.02 U	2 J	1.12 U	1.05 U	1.35 U	1.2 U	10
TRICHLOROFLUOROMETHANE	1.27 U	1.45 U	1.23 U	0.92 U	1.09 U	2 J	1.02 U	1 U	1.12 U	1.05 U	1.35 U	1.2 U	0.978 U
VINYL ACETATE	1.27 U	1.45 U	1.23 U	0.92 U	1.09 U	1.21 U	1.02 U	1 U	1.12 U	1.05 U	1.35 U	1.2 U	0.978 U
VINYL CHLORIDE	12	6	1.23 U	0.92 U	1.09 U	1.21 U	1.02 U	1 U	1.12 U	1.05 U	1.35 U	1.2 U	0.978 U

TABLE A-2

SUBSURFACE SOIL SAMPLE DATA
SWMU 16
NSA CRANE
CRANE, INDIANA

LOCATION	16SB071	16SB072	16SB072	16SB073	16SB074	16SB075	16SB076	16SB076	16SB077	16SB077	16SB077	16SB078	16SB078
SAMPLE ID	16SB0710206	16SB0720206	16SB0720607	16SB0730204	16SB0740206	16SB0750203	16SB0760206	16SB0760607	16SB0770206	16SB0770206-D	16SB0770610	16SB0780206	16SB0780609
SAMPLE DATE	20040812	20040812	20040812	20040812	20040817	20040812	20040812	20040812	20040812	20040812	20040812	20040812	20040812
ROUND	03	03	03	03	03	03	03	03	03	03	03	03	03
EVENT													
SAMPLE CODE	NORMAL	NORMAL	NORMAL	NORMAL	NORMAL	NORMAL	NORMAL	NORMAL	NORMAL	DUP	NORMAL	NORMAL	NORMAL
MATRIX	SO	SO	SO	SO	SO	SO	SO	SO	SO	SO	SO	SO	SO
SAMPLE TYPE	NORMAL	NORMAL	NORMAL	NORMAL	NORMAL	NORMAL	NORMAL	NORMAL	NORMAL	NORMAL	NORMAL	NORMAL	NORMAL
SUBMATRIX	SB	SB	SB	SB	SB	SB	SB	SB	SB	SB	SB	SB	SB
TOP DEPTH	2	2	6	2	2	2	2	6	2	2	6	2	6
BOTTOM DEPTH	6	6	7	4	6	3	6	7	6	6	10	6	9
EXPLOSIVES (MG/KG)													
1,3,5-TRINITROBENZENE													
1,3-DINITROBENZENE													
2,4,6-TRINITROTOLUENE													
2,4-DINITROTOLUENE													
2,6-DINITROTOLUENE													
2-AMINO-4,6-DINITROTOLUENE													
2-NITROTOLUENE													
3-NITROTOLUENE													
4-AMINO-2,6-DINITROTOLUENE													
4-NITROTOLUENE													
HMX													
NITROBENZENE													
PICRAMIC ACID													
PICRIC ACID													
RDX													
TETRYL													
HERBICIDES (UG/KG)													
HEXACHLOROPHENE													
PENTACHLOROPHENOL													
METALS (MG/KG)													
ALUMINUM													
ANTIMONY													
ARSENIC													
BARIUM													
BERYLLIUM													
CADMIUM													
CALCIUM													
CHROMIUM													
COBALT													
COPPER													
IRON													
LEAD													
LITHIUM													
MAGNESIUM													
MANGANESE													
MERCURY													
NICKEL													
POTASSIUM													
SELENIUM													
SILVER													
SODIUM													
STRONTIUM													
THALLIUM													
TIN													
TITANIUM													
VANADIUM													
ZINC													
METALS (UG/KG)													
LEAD													
MISCELLANEOUS PARAMETERS (%)													
PERCENT MOISTURE													
MISCELLANEOUS PARAMETERS (MEQ/100)													
CATION EXCHANGE CAPACITY													
MISCELLANEOUS PARAMETERS (MG/KG)													
TOTAL ORGANIC CARBON													
MISCELLANEOUS PARAMETERS (S.U.)													
PH													
PESTICIDES/PCBS (UG/KG)													
AROCLOR-1016													
AROCLOR-1221													
AROCLOR-1232													
AROCLOR-1242													
AROCLOR-1248													
AROCLOR-1254													
AROCLOR-1260													

TABLE A-2

SUBSURFACE SOIL SAMPLE DATA
SWMU 16
NSA CRANE
CRANE, INDIANA

LOCATION	16SB071	16SB072	16SB072	16SB073	16SB074	16SB075	16SB076	16SB076	16SB077	16SB077	16SB077	16SB078	16SB078
SAMPLE ID	16SB0710206	16SB0720206	16SB0720607	16SB0730204	16SB0740206	16SB0750203	16SB0760206	16SB0760607	16SB0770206	16SB0770206-D	16SB0770610	16SB0780206	16SB0780609
SAMPLE DATE	20040812	20040812	20040812	20040812	20040817	20040812	20040812	20040812	20040812	20040812	20040812	20040812	20040812
ROUND	03	03	03	03	03	03	03	03	03	03	03	03	03
EVENT													
SAMPLE CODE	NORMAL	NORMAL	NORMAL	NORMAL	NORMAL	NORMAL	NORMAL	NORMAL	NORMAL	DUP	NORMAL	NORMAL	NORMAL
MATRIX	SO	SO	SO	SO	SO	SO	SO	SO	SO	SO	SO	SO	SO
SAMPLE TYPE	NORMAL	NORMAL	NORMAL	NORMAL	NORMAL	NORMAL	NORMAL	NORMAL	NORMAL	NORMAL	NORMAL	NORMAL	NORMAL
SUBMATRIX	SB	SB	SB	SB	SB	SB	SB	SB	SB	SB	SB	SB	SB
TOP DEPTH	2	2	6	2	2	2	2	6	2	2	6	2	6
BOTTOM DEPTH	6	6	7	4	6	3	6	7	6	6	10	6	9
PETROLEUM HYDROCARBONS (UG/KG)													
DRO (C08-C28)													
TPH (C06-C12)													
SEMIVOLATILES (UG/KG)													
1,2,4,5-TETRACHLOROBENZENE													
1,2,4-TRICHLOROBENZENE													
1,2-DICHLOROBENZENE													
1,3-DICHLOROBENZENE													
1,4-DICHLOROBENZENE													
1,4-NAPHTHOQUINONE													
1,4-PHENYLENEDIAMINE													
1-NAPHTHYLAMINE													
2,2'-OXYBIS(1-CHLOROPROPANE)													
2,3,4,6-TETRACHLOROPHENOL													
2,4,5-TRICHLOROPHENOL													
2,4,6-TRICHLOROPHENOL													
2,4-DICHLOROPHENOL													
2,4-DIMETHYLPHENOL													
2,4-DINITROPHENOL													
2,6-DICHLOROPHENOL													
2-ACETYLAMINOFLUORENE													
2-CHLORONAPHTHALENE													
2-CHLOROPHENOL													
2-METHYLNAPHTHALENE													
2-METHYLPHENOL													
2-NAPHTHYLAMINE													
2-NITROANILINE													
2-NITROPHENOL													
2-PICOLINE													
3&4-METHYLPHENOL													
3,3'-DICHLOROBENZIDINE													
3,3'-DIMETHYLBENZIDINE													
3-METHYLCHOLANTHRENE													
3-NITROANILINE													
4,6-DINITRO-2-METHYLPHENOL													
4-AMINOBIPHENYL													
4-BROMOPHENYL PHENYL ETHER													
4-CHLORO-3-METHYLPHENOL													
4-CHLOROANILINE													
4-CHLOROPHENYL PHENYL ETHER													
4-NITROANILINE													
4-NITROPHENOL													
4-NITROQUINOLINE-1-OXIDE													
5-NITRO-O-TOLUIDINE													
7,12-DIMETHYLBENZ(A)ANTHRACENE													
A,A-DIMETHYLPHENETHYLAMINE													
ACENAPHTHENE													
ACENAPHTHYLENE													
ACETOPHENONE													
ANILINE													
ANTHRACENE													
ARAMITE													
BENZO(A)ANTHRACENE													
BENZO(A)PYRENE													
BENZO(B)FLUORANTHENE													
BENZO(G,H,I)PERYLENE													
BENZO(K)FLUORANTHENE													
BENZYL ALCOHOL													
BIS(2-CHLOROETHOXY)METHANE													
BIS(2-CHLOROETHYL)ETHER													
BIS(2-ETHYLHEXYL)PHTHALATE													
BUTYL BENZYL PHTHALATE													
CHLOROBENZILATE													
CHRYSENE													
DIALLATE													
DIBENZO(A,H)ANTHRACENE													
DIBENZOFURAN													

TABLE A-2

SUBSURFACE SOIL SAMPLE DATA
SWMU 16
NSA CRANE
CRANE, INDIANA

LOCATION	16SB071	16SB072	16SB072	16SB073	16SB074	16SB075	16SB076	16SB076	16SB077	16SB077	16SB077	16SB078	16SB078
SAMPLE ID	16SB0710206	16SB0720206	16SB0720607	16SB0730204	16SB0740206	16SB0750203	16SB0760206	16SB0760607	16SB0770206	16SB0770206-D	16SB0770610	16SB0780206	16SB0780609
SAMPLE DATE	20040812	20040812	20040812	20040812	20040817	20040812	20040812	20040812	20040812	20040812	20040812	20040812	20040812
ROUND	03	03	03	03	03	03	03	03	03	03	03	03	03
EVENT													
SAMPLE CODE	NORMAL	NORMAL	NORMAL	NORMAL	NORMAL	NORMAL	NORMAL	NORMAL	NORMAL	DUP	NORMAL	NORMAL	NORMAL
MATRIX	SO	SO	SO	SO	SO	SO	SO	SO	SO	SO	SO	SO	SO
SAMPLE TYPE	NORMAL	NORMAL	NORMAL	NORMAL	NORMAL	NORMAL	NORMAL	NORMAL	NORMAL	NORMAL	NORMAL	NORMAL	NORMAL
SUBMATRIX	SB	SB	SB	SB	SB	SB	SB	SB	SB	SB	SB	SB	SB
TOP DEPTH	2	2	6	2	2	2	2	6	2	2	6	2	6
BOTTOM DEPTH	6	6	7	4	6	3	6	7	6	6	10	6	9
DIETHYL PHTHALATE													
DIMETHYL PHTHALATE													
DI-N-BUTYL PHTHALATE													
DI-N-OCTYL PHTHALATE													
DIPHENYLAMINE													
ETHYL METHANE SULFONATE													
FLUORANTHENE													
FLUORENE													
HEXACHLOROBENZENE													
HEXACHLOROBUTADIENE													
HEXACHLOROCYCLOPENTADIENE													
HEXACHLOROETHANE													
HEXACHLOROPROPENE													
INDENO(1,2,3-CD)PYRENE													
ISODRIN													
ISOPHORONE													
ISOSAFROLE													
KEPONE													
METHAPYRILENE													
METHYL METHANE SULFONATE													
NAPHTHALENE													
N-NITROSODIETHYLAMINE													
N-NITROSODIMETHYLAMINE													
N-NITROSO-DI-N-BUTYLAMINE													
N-NITROSO-DI-N-PROPYLAMINE													
N-NITROSOMETHYLETHYLAMINE													
N-NITROSOMORPHOLINE													
N-NITROSOPIPERIDINE													
N-NITROSOPYRROLIDINE													
O,O,O-TRIETHYL PHOSPHOROTHIOATE													
O-TOLUIDINE													
PENTACHLOROBENZENE													
PENTACHLOROETHANE													
PENTACHLORONITROBENZENE													
PHENACETIN													
PHENANTHRENE													
PHENOL													
PRONAMIDE													
PYRENE													
PYRIDINE													
SAFROLE													
SOLVENT YELLOW 2													
VOLATILES (UG/KG)													
1,1,1,2-TETRACHLOROETHANE	1.16 U	0.986 U	1.22 U	1.03 U	1.04 U	0.975 U	0.929 U	1.12 U	0.988 U	0.976 U	0.92 U	1.01 U	1.04 UJ
1,1,1-TRICHLOROETHANE	1.16 U	0.986 U	1.22 U	1.03 U	1.04 U	0.975 U	0.929 U	1.12 U	0.988 U	0.976 U	0.92 U	1.01 U	1.04 UJ
1,1,2,2-TETRACHLOROETHANE	1.16 U	0.986 U	1.22 U	1.03 U	1.04 U	0.975 U	0.929 U	1.12 U	0.988 U	0.976 U	0.92 U	1.01 U	1.04 UJ
1,1,2-TRICHLOROETHANE	1.16 U	0.986 U	1.22 U	1.03 U	1.04 U	0.975 U	0.929 U	1.12 U	0.988 U	0.976 U	0.92 U	1.01 U	1.04 UJ
1,1,2-TRICHLOROTRIFLUOROETHANE													
1,1-DICHLOROETHANE	1.16 U	0.986 U	1.22 U	1.03 U	1.04 U	0.975 U	0.929 U	1.12 U	0.988 U	0.976 U	0.92 U	1.01 U	1.04 UJ
1,1-DICHLOROETHENE	1.16 U	0.986 U	1.22 U	1.03 U	1.04 U	0.975 U	0.929 U	1.12 U	0.988 U	0.976 U	0.92 U	1.01 U	1.04 UJ
1,2,3-TRICHLOROBENZENE													
1,2,3-TRICHLOROPROPANE	1.16 U	0.986 U	1.22 U	1.03 U	1.04 UJ	0.975 U	0.929 U	1.12 U	0.988 U	0.976 U	0.92 U	1.01 U	1.04 UJ
1,2,4-TRICHLOROBENZENE													
1,2-DIBROMO-3-CHLOROPROPANE	1.16 U	0.986 U	1.22 U	1.03 U	1.04 UJ	0.975 U	0.929 U	1.12 U	0.988 U	0.976 U	0.92 U	1.01 U	1.04 UJ
1,2-DIBROMOETHANE	1.16 U	0.986 UJ	1.22 UJ	1.03 UJ	1.04 UJ	0.975 UJ	0.929 U	1.12 U	0.988 U	0.976 U	0.92 U	1.01 U	1.04 UJ
1,2-DICHLOROBENZENE													
1,2-DICHLOROETHANE	1.16 U	0.986 U	1.22 U	1.03 U	1.04 U	0.975 U	0.929 U	1.12 U	0.988 U	0.976 U	0.92 U	1.01 U	1.04 UJ
1,2-DICHLOROPROPANE	1.16 U	0.986 U	1.22 U	1.03 U	1.04 U	0.975 U	0.929 U	1.12 U	0.988 U	0.976 U	0.92 U	1.01 U	1.04 UJ
1,3-DICHLOROBENZENE													
1,4-DICHLOROBENZENE													
1,4-DIOXANE	113 U	98.6 U	109 U	105 U	101 U	94.2 U	102 U	121 U	110 U	97.1 U	90.8 U	114 U	112 UJ
2-BUTANONE	1.16 U	0.986 U	1.22 U	1.03 U	1.04 U	0.975 U	1 J	1.12 U	0.988 U	0.976 U	0.92 U	1.01 U	1.04 UJ
2-HEXANONE	1.16 U	0.986 U	1.22 U	1.03 U	1.04 U	0.975 U	0.929 U	1.12 U	0.988 U	0.976 U	0.92 U	1.01 U	1.04 UJ
3-CHLOROPROPENE	1.16 U	0.986 U	1.22 U	1.03 U	1.04 U	0.975 U	0.929 U	1.12 U	0.988 U	0.976 U	0.92 U	1.01 U	1.04 UJ
4-METHYL-2-PENTANONE	1.16 U	0.986 U	1.22 U	1.03 U	1.04 U	0.975 U	0.929 U	1.12 U	0.988 U	0.976 U	0.92 U	1.01 U	1.04 UJ
ACETONE	3 J	8 BU	7 BU	13 BU	4 BU	6 BU	13 J	1.12 U	0.988 U	3 J	0.92 U	1.01 U	15 J
ACETONITRILE	45.2 U	39.4 U	43.6 U	41.9 U	40.3 U	37.7 U	40.9 U	48.6 U	44.1 U	38.8 U	36.3 U	45.7 U	45 UJ

TABLE A-2

SUBSURFACE SOIL SAMPLE DATA
SWMU 16
NSA CRANE
CRANE, INDIANA

LOCATION	16SB071	16SB072	16SB072	16SB073	16SB074	16SB075	16SB076	16SB076	16SB077	16SB077	16SB077	16SB078	16SB078
SAMPLE ID	16SB0710206	16SB0720206	16SB0720607	16SB0730204	16SB0740206	16SB0750203	16SB0760206	16SB0760607	16SB0770206	16SB0770206-D	16SB0770610	16SB0780206	16SB0780609
SAMPLE DATE	20040812	20040812	20040812	20040812	20040817	20040812	20040812	20040812	20040812	20040812	20040812	20040812	20040812
ROUND	03	03	03	03	03	03	03	03	03	03	03	03	03
EVENT													
SAMPLE CODE	NORMAL	NORMAL	NORMAL	NORMAL	NORMAL	NORMAL	NORMAL	NORMAL	NORMAL	DUP	NORMAL	NORMAL	NORMAL
MATRIX	SO	SO	SO	SO	SO	SO	SO	SO	SO	SO	SO	SO	SO
SAMPLE TYPE	NORMAL	NORMAL	NORMAL	NORMAL	NORMAL	NORMAL	NORMAL	NORMAL	NORMAL	NORMAL	NORMAL	NORMAL	NORMAL
SUBMATRIX	SB	SB	SB	SB	SB	SB	SB	SB	SB	SB	SB	SB	SB
TOP DEPTH	2	2	6	2	2	2	2	6	2	2	6	2	6
BOTTOM DEPTH	6	6	7	4	6	3	6	7	6	6	10	6	9
ACROLEIN	1.16 UR	0.986 UR	1.22 UR	1.03 UR	1.04 UR	0.975 UR	0.929 UR	1.12 UR	0.988 UR	0.976 UR	0.92 UR	1.01 UR	1.04 UR
ACRYLONITRILE	1.16 U	0.986 U	1.22 U	1.03 U	1.04 U	0.975 U	0.929 U	1.12 U	0.988 U	0.976 U	0.92 U	1.01 U	1.04 UJ
BENZENE	1.16 U	0.986 U	1.22 U	1.03 U	1.04 U	0.975 U	0.929 U	1.12 U	0.988 U	0.976 U	0.92 U	1.01 U	1.04 UJ
BROMODICHLOROMETHANE	1.16 U	0.986 U	1.22 U	1.03 U	1.04 U	0.975 U	0.929 U	1.12 U	0.988 U	0.976 U	0.92 U	1.01 U	1.04 UJ
BROMOFORM	1.16 U	0.986 U	1.22 U	1.03 U	1.04 U	0.975 U	0.929 U	1.12 U	0.988 U	0.976 U	0.92 U	1.01 U	1.04 UJ
BROMOMETHANE	1.16 U	0.986 UJ	1.22 UJ	1.03 UJ	1.04 U	0.975 UJ	0.929 U	1.12 U	0.988 U	0.976 U	0.92 U	1.01 U	1.04 UJ
CARBON DISULFIDE	1.16 U	0.986 U	1.22 U	1.03 U	1.04 U	0.975 U	0.929 U	1.12 U	0.988 U	0.976 U	0.92 U	1.01 U	1.04 UJ
CARBON TETRACHLORIDE	1.16 U	0.986 U	1.22 U	1.03 U	1.04 U	0.975 U	0.929 U	1.12 U	0.988 U	0.976 U	0.92 U	1.01 U	1.04 UJ
CHLOROBENZENE	1.16 U	0.986 U	1.22 U	1.03 U	1.04 U	0.975 U	0.929 U	1.12 U	0.988 U	0.976 U	0.92 U	1.01 U	1.04 UJ
CHLORODIBROMOMETHANE	1.16 U	0.986 U	1.22 U	1.03 U	1.04 U	0.975 U	0.929 U	1.12 U	0.988 U	0.976 U	0.92 U	1.01 U	1.04 UJ
CHLOROETHANE	1.16 U	0.986 U	1.22 U	1.03 U	1.04 U	0.975 U	0.929 U	1.12 U	0.988 U	0.976 U	0.92 U	1.01 U	1.04 UJ
CHLOROFORM	1.16 U	0.986 U	1.22 U	1.03 U	1.04 U	0.975 U	0.929 U	1.12 U	0.988 U	0.976 U	0.92 U	1.01 U	1.04 UJ
CHLOROMETHANE	1.16 U	0.986 U	1.22 U	1.03 U	1.04 U	0.975 U	0.929 U	1.12 U	0.988 U	0.976 U	0.92 U	1.01 U	1.04 UJ
CHLOROPRENE	1.16 U	0.986 U	1.22 U	1.03 U	1.04 U	0.975 U	0.929 U	1.12 U	0.988 U	0.976 U	0.92 U	1.01 U	1.04 UJ
CIS-1,2-DICHLOROETHENE	1.16 U	32	53	5	1.04 U	0.975 U	0.929 U	1.12 U	0.988 U	0.976 U	0.92 U	1.01 U	1.04 UJ
CIS-1,3-DICHLOROPROPENE	1.16 U	0.986 U	1.22 U	1.03 U	1.04 U	0.975 U	0.929 U	1.12 U	0.988 U	0.976 U	0.92 U	1.01 U	1.04 UJ
CYCLOHEXANE													
DIBROMOMETHANE	1.16 U	0.986 U	1.22 U	1.03 U	1.04 UJ	0.975 U	0.929 U	1.12 U	0.988 U	0.976 U	0.92 U	1.01 U	1.04 UJ
DICHLORODIFLUOROMETHANE	10	0.986 U	1.22 U	13	5	11	12	9	11 J	4 J	2 J	6	14 J
ETHYL METHACRYLATE	1.16 U	0.986 U	1.22 U	1.03 U	1.04 U	0.975 U	0.929 U	1.12 U	0.988 U	0.976 U	0.92 U	1.01 U	1.04 UJ
ETHYLBENZENE	1.16 U	0.986 U	1.22 U	1.03 U	1.04 U	0.975 U	0.929 U	1.12 U	0.988 U	0.976 U	0.92 U	1.01 U	1.04 UJ
ISOBUTANOL	45.2 U	39.4 U	43.6 U	41.9 U	40.3 U	37.7 U	40.9 U	48.6 U	44.1 U	38.8 U	36.3 U	45.7 U	45 UJ
ISOPROPYLBENZENE													
METHACRYLONITRILE	1.16 U	0.986 U	1.22 U	1.03 U	1.04 U	0.975 U	0.929 U	1.12 U	0.988 U	0.976 U	0.92 U	1.01 U	1.04 UJ
METHYL ACETATE													
METHYL IODIDE	1.16 U	0.986 U	1.22 U	1.03 U	1.04 UJ	0.975 U	0.929 U	1.12 U	0.988 U	0.976 U	0.92 U	1.01 U	1.04 UJ
METHYL METHACRYLATE	1.16 U	0.986 U	1.22 U	1.03 U	1.04 U	0.975 U	0.929 U	1.12 U	0.988 U	0.976 U	0.92 U	1.01 U	1.04 UJ
METHYL TERT-BUTYL ETHER													
METHYLENE CHLORIDE	1.16 UJ	2 U	1.22 U	5 U	1.04 UJ	4 U	0.929 UJ	1.12 UJ	0.988 UJ	0.976 UJ	0.92 UJ	1.01 UJ	1.04 UJ
PROPIONITRILE	45.2 U	39.4 U	43.6 U	41.9 U	40.3 U	37.7 U	40.9 U	48.6 U	44.1 U	38.8 U	36.3 U	45.7 U	45 UJ
STYRENE	1.16 U	0.986 U	1.22 U	1.03 U	1.04 U	0.975 U	0.929 U	1.12 U	0.988 U	0.976 U	0.92 U	1.01 U	1.04 UJ
TETRACHLOROETHENE	1.16 U	0.986 U	1.22 U	1.03 U	1.04 U	0.975 U	0.929 U	1.12 U	0.988 U	0.976 U	0.92 U	1.01 U	1.04 UJ
TOLUENE	1.16 U	0.986 U	1.22 U	1.03 U	1.04 U	0.975 U	0.929 U	1.12 U	0.988 U	0.976 U	0.92 U	1.01 U	1.04 UJ
TOTAL XYLENES	1.16 U	0.986 U	1.22 U	1.03 U	1.04 U	0.975 U	0.929 U	1.12 U	0.988 U	0.976 U	0.92 U	1.01 U	1.04 UJ
TRANS-1,2-DICHLOROETHENE	1.16 U	0.986 U	1.22 U	1.03 U	1.04 U	0.975 U	0.929 U	1.12 U	0.988 U	0.976 U	0.92 U	1.01 U	1.04 UJ
TRANS-1,3-DICHLOROPROPENE	1.16 U	0.986 U	1.22 U	1.03 U	1.04 U	0.975 U	0.929 U	1.12 U	0.988 U	0.976 U	0.92 U	1.01 U	1.04 UJ
TRANS-1,4-DICHLORO-2-BUTENE	1.16 U	0.986 U	1.22 U	1.03 U	1.04 U	0.975 U	0.929 U	1.12 U	0.988 U	0.976 U	0.92 U	1.01 U	1.04 UJ
TRICHLOROETHENE	1.16 U	5	11	1.03 U	1.04 U	0.975 U	0.929 U	1.12 U	0.988 U	0.976 U	1 J	1.01 U	1.04 UJ
TRICHLOROFLUOROMETHANE	1.16 U	0.986 U	1.22 U	1.03 J	1.04 U	1 J	1 J	1.12 U	1 J	0.976 U	0.92 U	1.01 U	2 J
VINYL ACETATE	1.16 U	0.986 U	1.22 U	1.03 U	1.04 U	0.975 U	0.929 U	1.12 U	0.988 U	0.976 U	0.92 U	1.01 U	1.04 UJ
VINYL CHLORIDE	1.16 U	0.986 U	1.22 U	1.03 U	1.04 U	0.975 U	0.929 U	1.12 U	0.988 U	0.976 U	0.92 U	1.01 U	1.04 UJ

TABLE A-2

SUBSURFACE SOIL SAMPLE DATA
SWMU 16
NSA CRANE
CRANE, INDIANA

LOCATION	16SB090	16SB090	16SB091	16SB091	16SB091	16SB092	16SB092	16SB093	16SB093	16SB094	16SB095	16SB095	16SB095
SAMPLE ID	16SB0900406	16SB0900608	16SB0910406	16SB0910406-D	16SB0910609	16SB0920406	16SB0920608	16SB0930406	16SB0930608	16SB0940708	16SB0950406	16SB0950607	16SB0960406
SAMPLE DATE	20040816	20040816	20040816	20040816	20040816	20040816	20040816	20040816	20040816	20040816	20040816	20040816	20040816
ROUND	03	03	03	03	03	03	03	03	03	03	03	03	03
EVENT													
SAMPLE CODE	NORMAL	NORMAL	NORMAL	DUP	NORMAL	NORMAL	NORMAL	NORMAL	NORMAL	NORMAL	NORMAL	NORMAL	NORMAL
MATRIX	SO	SO	SO	SO	SO	SO	SO	SO	SO	SO	SO	SO	SO
SAMPLE TYPE	NORMAL	NORMAL	NORMAL	NORMAL	NORMAL	NORMAL	NORMAL	NORMAL	NORMAL	NORMAL	NORMAL	NORMAL	NORMAL
SUBMATRIX	SB	SB	SB	SB	SB	SB	SB	SB	SB	SB	SB	SB	SB
TOP DEPTH	4	6	4	4	6	4	6	4	6	7	4	6	4
BOTTOM DEPTH	6	8	6	6	9	6	8	6	8	8	6	7	6
EXPLOSIVES (MG/KG)													
1,3,5-TRINITROBENZENE													
1,3-DINITROBENZENE													
2,4,6-TRINITROTOLUENE													
2,4-DINITROTOLUENE													
2,6-DINITROTOLUENE													
2-AMINO-4,6-DINITROTOLUENE													
2-NITROTOLUENE													
3-NITROTOLUENE													
4-AMINO-2,6-DINITROTOLUENE													
4-NITROTOLUENE													
HMX													
NITROBENZENE													
PICRAMIC ACID													
PICRIC ACID													
RDX													
TETRYL													
HERBICIDES (UG/KG)													
HEXACHLOROPHENE													
PENTACHLOROPHENOL													
METALS (MG/KG)													
ALUMINUM													
ANTIMONY													
ARSENIC													
BARIUM													
BERYLLIUM													
CADMIUM													
CALCIUM													
CHROMIUM													
COBALT													
COPPER													
IRON													
LEAD													
LITHIUM													
MAGNESIUM													
MANGANESE													
MERCURY													
NICKEL													
POTASSIUM													
SELENIUM													
SILVER													
SODIUM													
STRONTIUM													
THALLIUM													
TIN													
TITANIUM													
VANADIUM													
ZINC													
METALS (UG/KG)													
LEAD													
MISCELLANEOUS PARAMETERS (%)													
PERCENT MOISTURE													
MISCELLANEOUS PARAMETERS (MEQ/100)													
CATION EXCHANGE CAPACITY													
MISCELLANEOUS PARAMETERS (MG/KG)													
TOTAL ORGANIC CARBON													
MISCELLANEOUS PARAMETERS (S.U.)													
PH													
PESTICIDES/PCBS (UG/KG)													
AROCLOR-1016													
AROCLOR-1221													
AROCLOR-1232													
AROCLOR-1242													
AROCLOR-1248													
AROCLOR-1254													
AROCLOR-1260													

TABLE A-2

SUBSURFACE SOIL SAMPLE DATA
SWMU 16
NSA CRANE
CRANE, INDIANA

LOCATION	16SB090	16SB090	16SB091	16SB091	16SB091	16SB092	16SB092	16SB093	16SB093	16SB094	16SB095	16SB095	16SB095
SAMPLE ID	16SB0900406	16SB0900608	16SB0910406	16SB0910406-D	16SB0910609	16SB0920406	16SB0920608	16SB0930406	16SB0930608	16SB0940708	16SB0950406	16SB0950607	16SB0960406
SAMPLE DATE	20040816	20040816	20040816	20040816	20040816	20040816	20040816	20040816	20040816	20040816	20040816	20040816	20040816
ROUND	03	03	03	03	03	03	03	03	03	03	03	03	03
EVENT													
SAMPLE CODE	NORMAL	NORMAL	NORMAL	DUP	NORMAL	NORMAL	NORMAL	NORMAL	NORMAL	NORMAL	NORMAL	NORMAL	NORMAL
MATRIX	SO	SO	SO	SO	SO	SO	SO	SO	SO	SO	SO	SO	SO
SAMPLE TYPE	NORMAL	NORMAL	NORMAL	NORMAL	NORMAL	NORMAL	NORMAL	NORMAL	NORMAL	NORMAL	NORMAL	NORMAL	NORMAL
SUBMATRIX	SB	SB	SB	SB	SB	SB	SB	SB	SB	SB	SB	SB	SB
TOP DEPTH	4	6	4	4	6	4	6	4	6	7	4	6	4
BOTTOM DEPTH	6	8	6	6	9	6	8	6	8	8	6	7	6
PETROLEUM HYDROCARBONS (UG/KG)													
DRO (C08-C28)													
TPH (C06-C12)													
SEMIVOLATILES (UG/KG)													
1,2,4,5-TETRACHLOROBENZENE													
1,2,4-TRICHLOROBENZENE													
1,2-DICHLOROBENZENE													
1,3-DICHLOROBENZENE													
1,4-DICHLOROBENZENE													
1,4-NAPHTHOQUINONE													
1,4-PHENYLENEDIAMINE													
1-NAPHTHYLAMINE													
2,2'-OXYBIS(1-CHLOROPROPANE)													
2,3,4,6-TETRACHLOROPHENOL													
2,4,5-TRICHLOROPHENOL													
2,4,6-TRICHLOROPHENOL													
2,4-DICHLOROPHENOL													
2,4-DIMETHYLPHENOL													
2,4-DINITROPHENOL													
2,6-DICHLOROPHENOL													
2-ACETYLAMINOFLUORENE													
2-CHLORONAPHTHALENE													
2-CHLOROPHENOL													
2-METHYLNAPHTHALENE													
2-METHYLPHENOL													
2-NAPHTHYLAMINE													
2-NITROANILINE													
2-NITROPHENOL													
2-PICOLINE													
3&4-METHYLPHENOL													
3,3'-DICHLOROBENZIDINE													
3,3'-DIMETHYLBENZIDINE													
3-METHYLCHOLANTHRENE													
3-NITROANILINE													
4,6-DINITRO-2-METHYLPHENOL													
4-AMINOBIPHENYL													
4-BROMOPHENYL PHENYL ETHER													
4-CHLORO-3-METHYLPHENOL													
4-CHLOROANILINE													
4-CHLOROPHENYL PHENYL ETHER													
4-NITROANILINE													
4-NITROPHENOL													
4-NITROQUINOLINE-1-OXIDE													
5-NITRO-O-TOLUIDINE													
7,12-DIMETHYLBENZ(A)ANTHRACENE													
A,A-DIMETHYLPHENETHYLAMINE													
ACENAPHTHENE													
ACENAPHTHYLENE													
ACETOPHENONE													
ANILINE													
ANTHRACENE													
ARAMITE													
BENZO(A)ANTHRACENE													
BENZO(A)PYRENE													
BENZO(B)FLUORANTHENE													
BENZO(G,H,I)PERYLENE													
BENZO(K)FLUORANTHENE													
BENZYL ALCOHOL													
BIS(2-CHLOROETHOXY)METHANE													
BIS(2-CHLOROETHYL)ETHER													
BIS(2-ETHYLHEXYL)PHTHALATE													
BUTYL BENZYL PHTHALATE													
CHLOROBENZILATE													
CHRYSENE													
DIALLATE													
DIBENZO(A,H)ANTHRACENE													
DIBENZOFURAN													

TABLE A-2

SUBSURFACE SOIL SAMPLE DATA
SWMU 16
NSA CRANE
CRANE, INDIANA

LOCATION	16SB090	16SB090	16SB091	16SB091	16SB091	16SB092	16SB092	16SB093	16SB093	16SB094	16SB095	16SB095	16SB095
SAMPLE ID	16SB0900406	16SB0900608	16SB0910406	16SB0910406-D	16SB0910609	16SB0920406	16SB0920608	16SB0930406	16SB0930608	16SB0940708	16SB0950406	16SB0950607	16SB0960406
SAMPLE DATE	20040816	20040816	20040816	20040816	20040816	20040816	20040816	20040816	20040816	20040816	20040816	20040816	20040816
ROUND	03	03	03	03	03	03	03	03	03	03	03	03	03
EVENT													
SAMPLE CODE	NORMAL	NORMAL	NORMAL	DUP	NORMAL	NORMAL	NORMAL	NORMAL	NORMAL	NORMAL	NORMAL	NORMAL	NORMAL
MATRIX	SO	SO	SO	SO	SO	SO	SO	SO	SO	SO	SO	SO	SO
SAMPLE TYPE	NORMAL	NORMAL	NORMAL	NORMAL	NORMAL	NORMAL	NORMAL	NORMAL	NORMAL	NORMAL	NORMAL	NORMAL	NORMAL
SUBMATRIX	SB	SB	SB	SB	SB	SB	SB	SB	SB	SB	SB	SB	SB
TOP DEPTH	4	6	4	4	6	4	6	4	6	7	4	6	4
BOTTOM DEPTH	6	8	6	6	9	6	8	6	8	8	6	7	6
DIETHYL PHTHALATE													
DIMETHYL PHTHALATE													
DI-N-BUTYL PHTHALATE													
DI-N-OCTYL PHTHALATE													
DIPHENYLAMINE													
ETHYL METHANE SULFONATE													
FLUORANTHENE													
FLUORENE													
HEXACHLOROBENZENE													
HEXACHLOROBUTADIENE													
HEXACHLOROCYCLOPENTADIENE													
HEXACHLOROETHANE													
HEXACHLOROPROPENE													
INDENO(1,2,3-CD)PYRENE													
ISODRIN													
ISOPHORONE													
ISOSAFROLE													
KEPONE													
METHAPYRILENE													
METHYL METHANE SULFONATE													
NAPHTHALENE													
N-NITROSODIETHYLAMINE													
N-NITROSODIMETHYLAMINE													
N-NITROSO-DI-N-BUTYLAMINE													
N-NITROSO-DI-N-PROPYLAMINE													
N-NITROSOMETHYLETHYLAMINE													
N-NITROSOMORPHOLINE													
N-NITROSOPIPERIDINE													
N-NITROSOPYRROLIDINE													
O,O,O-TRIETHYL PHOSPHOROTHIOATE													
O-TOLUIDINE													
PENTACHLOROBENZENE													
PENTACHLOROETHANE													
PENTACHLORONITROBENZENE													
PHENACETIN													
PHENANTHRENE													
PHENOL													
PRONAMIDE													
PYRENE													
PYRIDINE													
SAFROLE													
SOLVENT YELLOW 2													
VOLATILES (UG/KG)													
1,1,1,2-TETRACHLOROETHANE	0.955 U	1.17 U	0.944 U	0.908 U	0.974 U	0.932 U	0.869 U	0.95 U	1.05 U	1.48 U	1.01 UJ	1.05 U	U U
1,1,1-TRICHLOROETHANE	0.955 U	1.17 U	0.944 U	0.908 U	0.974 U	0.932 U	0.869 U	0.95 U	1.05 U	1.48 U	1.01 U	1.05 U	U U
1,1,2,2-TETRACHLOROETHANE	0.955 U	1.17 U	0.944 U	0.908 U	0.974 U	0.932 U	0.869 U	0.95 U	1.05 U	1.48 U	1.01 U	1.05 U	U U
1,1,2-TRICHLOROETHANE	0.955 U	1.17 U	0.944 U	0.908 U	0.974 U	0.932 U	0.869 U	0.95 U	1.05 U	1.48 U	1.01 U	1.05 U	U U
1,1,2-TRICHLOROTRIFLUOROETHANE													
1,1-DICHLOROETHANE	0.955 U	1.17 U	0.944 U	0.908 U	0.974 U	0.932 U	0.869 U	0.95 U	1.05 U	1.48 U	1.01 U	1.05 U	U U
1,1-DICHLOROETHENE	0.955 U	1.17 U	0.944 U	0.908 U	0.974 U	0.932 U	0.869 U	0.95 U	1.05 U	1.48 U	1.01 U	1.05 U	U U
1,2,3-TRICHLOROBENZENE													
1,2,3-TRICHLOROPROPANE	0.955 U	1.17 U	0.944 U	0.908 U	0.974 U	0.932 U	0.869 U	0.95 U	1.05 U	1.48 U	1.01 U	1.05 U	U U
1,2,4-TRICHLOROBENZENE													
1,2-DIBROMO-3-CHLOROPROPANE	0.955 U	1.17 U	0.944 U	0.908 U	0.974 U	0.932 U	0.869 U	0.95 U	1.05 U	1.48 U	1.01 U	1.05 U	U U
1,2-DIBROMOETHANE	0.955 U	1.17 U	0.944 U	0.908 U	0.974 U	0.932 U	0.869 U	0.95 U	1.05 U	1.48 U	1.01 U	1.05 U	U U
1,2-DICHLOROBENZENE													
1,2-DICHLOROETHANE	0.955 U	1.17 U	0.944 U	0.908 U	0.974 U	0.932 U	0.869 U	0.95 U	1.05 U	1.48 U	1.01 U	1.05 U	U U
1,2-DICHLOROPROPANE	0.955 U	1.17 U	0.944 U	0.908 U	0.974 U	0.932 U	0.869 U	0.95 U	1.05 U	1.48 U	1.01 U	1.05 U	U U
1,3-DICHLOROBENZENE													
1,4-DICHLOROBENZENE													
1,4-DIOXANE	89.8 U	97.2 U	94.4 U	90.8 U	102 U	90.9 U	96 U	103 U	109 U	128 U	102 UJ	101 U	U U
2-BUTANONE	0.955 U	1.17 U	0.944 U	0.908 U	0.974 U	0.932 U	0.869 U	0.95 U	1.05 U	1.48 U	1.01 U	1.05 U	U U
2-HEXANONE	0.955 U	1.17 U	0.944 U	0.908 U	0.974 U	0.932 U	0.869 U	0.95 U	1.05 U	1.48 U	1.01 U	1.05 U	U U
3-CHLOROPROPENE	0.955 U	1.17 U	0.944 U	0.908 U	0.974 U	0.932 U	0.869 U	0.95 U	1.05 U	1.48 U	1.01 U	1.05 U	U U
4-METHYL-2-PENTANONE	0.955 U	1.17 U	0.944 U	0.908 U	0.974 U	0.932 U	0.869 U	0.95 U	1.05 U	1.48 U	1.01 U	1.05 U	U U
ACETONE	0.955 U	1.17 U	0.944 U	0.908 U	0.974 U	0.932 U	0.869 U	0.95 U	1.05 U	1.48 U	4 J	7 J	U U
ACETONITRILE	35.9 U	38.9 U	37.7 U	36.3 U	40.9 U	36.4 U	38.4 U	41.3 U	43.6 U	51.4 U	40.9 U	40.6 U	U U

TABLE A-2

SUBSURFACE SOIL SAMPLE DATA
SWMU 16
NSA CRANE
CRANE, INDIANA

LOCATION	16SB090	16SB090	16SB091	16SB091	16SB091	16SB092	16SB092	16SB093	16SB093	16SB094	16SB095	16SB095	16SB095
SAMPLE ID	16SB0900406	16SB0900608	16SB0910406	16SB0910406-D	16SB0910609	16SB0920406	16SB0920608	16SB0930406	16SB0930608	16SB0940708	16SB0950406	16SB0950607	16SB0960406
SAMPLE DATE	20040816	20040816	20040816	20040816	20040816	20040816	20040816	20040816	20040816	20040816	20040816	20040816	20040816
ROUND	03	03	03	03	03	03	03	03	03	03	03	03	03
EVENT													
SAMPLE CODE	NORMAL	NORMAL	NORMAL	DUP	NORMAL	NORMAL	NORMAL	NORMAL	NORMAL	NORMAL	NORMAL	NORMAL	NORMAL
MATRIX	SO	SO	SO	SO	SO	SO	SO	SO	SO	SO	SO	SO	SO
SAMPLE TYPE	NORMAL	NORMAL	NORMAL	NORMAL	NORMAL	NORMAL	NORMAL	NORMAL	NORMAL	NORMAL	NORMAL	NORMAL	NORMAL
SUBMATRIX	SB	SB	SB	SB	SB	SB	SB	SB	SB	SB	SB	SB	SB
TOP DEPTH	4	6	4	4	6	4	6	4	6	7	4	6	4
BOTTOM DEPTH	6	8	6	6	9	6	8	6	8	8	6	7	6
ACROLEIN	0.955 UR	1.17 UR	0.944 UR	0.908 UR	0.974 UR	0.932 UR	0.869 UR	0.95 UR	1.05 UR	1.48 UR	1.01 UR	1.05 UR	UR UR
ACRYLONITRILE	0.955 U	1.17 U	0.944 U	0.908 U	0.974 U	0.932 U	0.869 U	0.95 U	1.05 U	1.48 U	1.01 U	1.05 U	U U
BENZENE	0.955 U	1.17 U	0.944 U	0.908 U	0.974 U	0.932 U	0.869 U	0.95 U	1.05 U	1.48 U	1.01 U	1.05 U	U U
BROMODICHLOROMETHANE	0.955 U	1.17 U	0.944 U	0.908 U	0.974 U	0.932 U	0.869 U	0.95 U	1.05 U	1.48 U	1.01 U	1.05 U	U U
BROMOFORM	0.955 U	1.17 U	0.944 U	0.908 U	0.974 U	0.932 U	0.869 U	0.95 U	1.05 U	1.48 U	1.01 U	1.05 U	U U
BROMOMETHANE	0.955 U	1.17 U	0.944 U	0.908 U	0.974 U	0.932 U	0.869 U	0.95 U	1.05 U	1.48 U	1.01 U	1.05 U	U U
CARBON DISULFIDE	0.955 U	1.17 U	0.944 U	0.908 U	0.974 U	0.932 U	0.869 U	0.95 U	1.05 U	1.48 U	1.01 U	1.05 U	U U
CARBON TETRACHLORIDE	0.955 U	1.17 U	0.944 U	0.908 U	0.974 U	0.932 U	0.869 U	0.95 U	1.05 U	1.48 U	1.01 U	1.05 U	U U
CHLOROBENZENE	0.955 U	1.17 U	0.944 U	0.908 U	0.974 U	0.932 U	0.869 U	0.95 U	1.05 U	1.48 U	1.01 U	1.05 U	U U
CHLORODIBROMOMETHANE	0.955 U	1.17 U	0.944 U	0.908 U	0.974 U	0.932 U	0.869 U	0.95 U	1.05 U	1.48 U	1.01 U	1.05 U	U U
CHLOROETHANE	0.955 U	1.17 U	0.944 U	0.908 U	0.974 U	0.932 U	0.869 U	0.95 U	1.05 U	1.48 U	1.01 U	1.05 U	U U
CHLOROFORM	0.955 U	1.17 U	5	7	6	0.932 U	0.869 U	3	4	1.48 U	10	15	J U
CHLOROMETHANE	0.955 U	1.17 U	0.944 U	0.908 U	0.974 U	0.932 U	0.869 U	0.95 U	1.05 U	1.48 U	1.01 U	1.05 U	U U
CHLOROPRENE	0.955 U	1.17 U	0.944 U	0.908 U	0.974 U	0.932 U	0.869 U	0.95 U	1.05 U	1.48 U	1.01 U	1.05 U	U U
CIS-1,2-DICHLOROETHENE	0.955 U	1.17 J	1 J	2 J	3 J	0.932 U	0.869 U	0.95 U	1.05 U	1.48 U	1.01 U	1.05 U	U U
CIS-1,3-DICHLOROPROPENE	0.955 U	1.17 U	0.944 U	0.908 U	0.974 U	0.932 U	0.869 U	0.95 U	1.05 U	1.48 U	1.01 U	1.05 U	U U
CYCLOHEXANE													
DIBROMOMETHANE	0.955 U	1.17 U	0.944 U	0.908 U	0.974 U	0.932 U	0.869 U	0.95 U	1.05 U	1.48 U	1.01 U	1.05 U	U U
DICHLORODIFLUOROMETHANE	4 J	6 J	9 J	3 J	2 J	1 J	5 J	8	12	26	1.01 J	6	J
ETHYL METHACRYLATE	0.955 U	1.17 U	0.944 U	0.908 U	0.974 U	0.932 U	0.869 U	0.95 U	1.05 U	1.48 U	1.01 U	1.05 U	U U
ETHYLBENZENE	0.955 U	1.17 U	0.944 U	0.908 U	0.974 U	0.932 U	0.869 U	0.95 U	1.05 U	1.48 U	1.01 U	1.05 U	U U
ISOBUTANOL	35.9 U	38.9 U	37.7 U	36.3 U	40.9 U	36.4 U	38.4 U	41.3 U	43.6 U	51.4 U	40.9 U	40.6 U	U U
ISOPROPYLBENZENE													
METHACRYLONITRILE	0.955 U	1.17 U	0.944 U	0.908 U	0.974 U	0.932 U	0.869 U	0.95 U	1.05 U	1.48 U	1.01 U	1.05 U	U U
METHYL ACETATE													
METHYL IODIDE	0.955 U	1.17 U	0.944 U	0.908 U	0.974 U	0.932 U	0.869 U	0.95 U	1.05 U	1.48 U	1.01 U	1.05 U	U U
METHYL METHACRYLATE	0.955 U	1.17 U	0.944 U	0.908 U	0.974 U	0.932 U	0.869 U	0.95 U	1.05 U	1.48 U	1.01 U	1.05 U	U U
METHYL TERT-BUTYL ETHER													
METHYLENE CHLORIDE	0.955 UJ	1.17 UJ	0.944 UJ	0.908 UJ	0.974 UJ	0.932 UJ	0.869 UJ	0.95 UJ	1.05 UJ	1.48 UJ	1.01 UJ	1.05 UJ	UJ UJ
PROPIONITRILE	35.9 U	38.9 U	37.7 U	36.3 U	40.9 U	36.4 U	38.4 U	41.3 U	43.6 U	51.4 U	40.9 U	40.6 U	U U
STYRENE	0.955 U	1.17 U	0.944 U	0.908 U	0.974 U	0.932 U	0.869 U	0.95 U	1.05 U	1.48 U	1.01 U	1.05 U	U U
TETRACHLOROETHENE	0.955 U	1.17 U	0.944 U	0.908 U	0.974 U	0.932 U	0.869 U	0.95 U	1.05 U	1.48 U	1.01 U	1.05 U	U U
TOLUENE	0.955 U	1.17 U	0.944 U	0.908 U	0.974 U	0.932 U	0.869 U	0.95 U	1.05 U	1.48 U	1.01 U	1.05 U	U U
TOTAL XYLENES	0.955 U	1.17 U	0.944 U	0.908 U	0.974 U	0.932 U	0.869 U	0.95 U	1.05 U	1.48 U	1.01 U	1.05 U	U U
TRANS-1,2-DICHLOROETHENE	0.955 U	1.17 U	0.944 U	0.908 U	0.974 U	0.932 U	0.869 U	0.95 U	1.05 U	1.48 U	1.01 U	1.05 U	U U
TRANS-1,3-DICHLOROPROPENE	0.955 U	1.17 U	0.944 U	0.908 U	0.974 U	0.932 U	0.869 U	0.95 U	1.05 U	1.48 U	1.01 U	1.05 U	U U
TRANS-1,4-DICHLORO-2-BUTENE	0.955 U	1.17 U	0.944 U	0.908 U	0.974 U	0.932 U	0.869 U	0.95 U	1.05 U	1.48 U	1.01 U	1.05 U	U U
TRICHLOROETHENE	220 J	220 J	390 J	1500 J	980	32	28	250 J	360	20	9000	2000	J
TRICHLOROFLUOROMETHANE	0.955 U	1.17 U	0.944 U	0.908 U	0.974 U	0.932 U	0.869 U	0.95 U	1.05 U	2 J	1.01 U	1.05 U	U U
VINYL ACETATE	0.955 U	1.17 U	0.944 U	0.908 U	0.974 U	0.932 U	0.869 U	0.95 U	1.05 U	1.48 U	1.01 U	1.05 U	U U
VINYL CHLORIDE	0.955 U	1.17 U	0.944 U	0.908 U	0.974 U	0.932 U	0.869 U	0.95 U	1.05 U	1.48 U	1.01 U	1.05 U	U U

TABLE A-2

SUBSURFACE SOIL SAMPLE DATA
SWMU 16
NSA CRANE
CRANE, INDIANA

LOCATION	16SB096	16SB097	16SB097	16SB097	16SB098	16SB098	16SB099	16SB099	16SB118	16SB118	16SB119	16SB119	16SB120
SAMPLE ID	16SB0960406	16SB0970406	16SB0970607	16SB0970607-D	16SB0980206	16SB0980607	16SB0990206	16SB0990608	16SB1180206	16SB1180607	16SB1190406	16SB1190608	16SB1200406
SAMPLE DATE	20040816	20040816	20040816	20040816	20040816	20040816	20040816	20040816	20110824	20110824	20110824	20110824	20110824
ROUND	03	03	03	03	03	03	03	03					
EVENT													
SAMPLE CODE	NORMAL	NORMAL	NORMAL	DUP	NORMAL	NORMAL	NORMAL	NORMAL	NORMAL	NORMAL	NORMAL	NORMAL	NORMAL
MATRIX	SO	SO	SO	SO	SO	SO	SO	SO	SO	SO	SO	SO	SO
SAMPLE TYPE	NORMAL	NORMAL	NORMAL	NORMAL	NORMAL	NORMAL	NORMAL	NORMAL	NORMAL	NORMAL	NORMAL	NORMAL	NORMAL
SUBMATRIX	SB	SB	SB	SB	SB	SB	SB	SB	SB	SB	SB	SB	SB
TOP DEPTH	4	4	6	6	2	6	2	6	2	6	4	6	4
BOTTOM DEPTH	6	6	7	7	6	7	6	8	6	7	6	8	6
EXPLOSIVES (MG/KG)													
1,3,5-TRINITROBENZENE													
1,3-DINITROBENZENE													
2,4,6-TRINITROTOLUENE													
2,4-DINITROTOLUENE													
2,6-DINITROTOLUENE													
2-AMINO-4,6-DINITROTOLUENE													
2-NITROTOLUENE													
3-NITROTOLUENE													
4-AMINO-2,6-DINITROTOLUENE													
4-NITROTOLUENE													
HMX													
NITROBENZENE													
PICRAMIC ACID													
PICRIC ACID													
RDX													
TETRYL													
HERBICIDES (UG/KG)													
HEXACHLOROPHENE													
PENTACHLOROPHENOL													
METALS (MG/KG)													
ALUMINUM													
ANTIMONY													
ARSENIC													
BARIUM													
BERYLLIUM													
CADMIUM													
CALCIUM													
CHROMIUM													
COBALT													
COPPER													
IRON													
LEAD													
LITHIUM													
MAGNESIUM													
MANGANESE													
MERCURY													
NICKEL													
POTASSIUM													
SELENIUM													
SILVER													
SODIUM													
STRONTIUM													
THALLIUM													
TIN													
TITANIUM													
VANADIUM													
ZINC													
METALS (UG/KG)													
LEAD													
MISCELLANEOUS PARAMETERS (%)													
PERCENT MOISTURE									18	17	17	12	22
MISCELLANEOUS PARAMETERS (MEQ/100)													
CATION EXCHANGE CAPACITY													
MISCELLANEOUS PARAMETERS (MG/KG)													
TOTAL ORGANIC CARBON													
MISCELLANEOUS PARAMETERS (S.U.)													
PH													
PESTICIDES/PCBS (UG/KG)													
AROCLOR-1016													
AROCLOR-1221													
AROCLOR-1232													
AROCLOR-1242													
AROCLOR-1248													
AROCLOR-1254													
AROCLOR-1260													

TABLE A-2

SUBSURFACE SOIL SAMPLE DATA
SWMU 16
NSA CRANE
CRANE, INDIANA

LOCATION	16SB096	16SB097	16SB097	16SB097	16SB098	16SB098	16SB099	16SB099	16SB118	16SB118	16SB119	16SB119	16SB120
SAMPLE ID	16SB0960406	16SB0970406	16SB0970607	16SB0970607-D	16SB0980206	16SB0980607	16SB0990206	16SB0990608	16SB1180206	16SB1180607	16SB1190406	16SB1190608	16SB1200406
SAMPLE DATE	20040816	20040816	20040816	20040816	20040816	20040816	20040816	20040816	20110824	20110824	20110824	20110824	20110824
ROUND	03	03	03	03	03	03	03	03					
EVENT													
SAMPLE CODE	NORMAL	NORMAL	NORMAL	DUP	NORMAL	NORMAL	NORMAL	NORMAL	NORMAL	NORMAL	NORMAL	NORMAL	NORMAL
MATRIX	SO	SO	SO	SO	SO	SO	SO	SO	SO	SO	SO	SO	SO
SAMPLE TYPE	NORMAL	NORMAL	NORMAL	NORMAL	NORMAL	NORMAL	NORMAL	NORMAL	NORMAL	NORMAL	NORMAL	NORMAL	NORMAL
SUBMATRIX	SB	SB	SB	SB	SB	SB	SB	SB	SB	SB	SB	SB	SB
TOP DEPTH	4	4	6	6	2	6	2	6	2	6	4	6	4
BOTTOM DEPTH	6	6	7	7	6	7	6	8	6	7	6	8	6
PETROLEUM HYDROCARBONS (UG/KG)													
DRO (C08-C28)													
TPH (C06-C12)													
SEMIVOLATILES (UG/KG)													
1,2,4,5-TETRACHLOROBENZENE													
1,2,4-TRICHLOROBENZENE													
1,2-DICHLOROBENZENE													
1,3-DICHLOROBENZENE													
1,4-DICHLOROBENZENE													
1,4-NAPHTHOQUINONE													
1,4-PHENYLENEDIAMINE													
1-NAPHTHYLAMINE													
2,2'-OXYBIS(1-CHLOROPROPANE)													
2,3,4,6-TETRACHLOROPHENOL													
2,4,5-TRICHLOROPHENOL													
2,4,6-TRICHLOROPHENOL													
2,4-DICHLOROPHENOL													
2,4-DIMETHYLPHENOL													
2,4-DINITROPHENOL													
2,6-DICHLOROPHENOL													
2-ACETYLAMINOFLUORENE													
2-CHLORONAPHTHALENE													
2-CHLOROPHENOL													
2-METHYLNAPHTHALENE													
2-METHYLPHENOL													
2-NAPHTHYLAMINE													
2-NITROANILINE													
2-NITROPHENOL													
2-PICOLINE													
3&4-METHYLPHENOL													
3,3'-DICHLOROBENZIDINE													
3,3'-DIMETHYLBENZIDINE													
3-METHYLCHOLANTHRENE													
3-NITROANILINE													
4,6-DINITRO-2-METHYLPHENOL													
4-AMINOBIPHENYL													
4-BROMOPHENYL PHENYL ETHER													
4-CHLORO-3-METHYLPHENOL													
4-CHLOROANILINE													
4-CHLOROPHENYL PHENYL ETHER													
4-NITROANILINE													
4-NITROPHENOL													
4-NITROQUINOLINE-1-OXIDE													
5-NITRO-O-TOLUIDINE													
7,12-DIMETHYLBENZ(A)ANTHRACENE													
A,A-DIMETHYLPHENETHYLAMINE													
ACENAPHTHENE													
ACENAPHTHYLENE													
ACETOPHENONE													
ANILINE													
ANTHRACENE													
ARAMITE													
BENZO(A)ANTHRACENE													
BENZO(A)PYRENE													
BENZO(B)FLUORANTHENE													
BENZO(G,H,I)PERYLENE													
BENZO(K)FLUORANTHENE													
BENZYL ALCOHOL													
BIS(2-CHLOROETHOXY)METHANE													
BIS(2-CHLOROETHYL)ETHER													
BIS(2-ETHYLHEXYL)PHTHALATE													
BUTYL BENZYL PHTHALATE													
CHLOROBENZILATE													
CHRYSENE													
DIALLATE													
DIBENZO(A,H)ANTHRACENE													
DIBENZOFURAN													

TABLE A-2

SUBSURFACE SOIL SAMPLE DATA
SWMU 16
NSA CRANE
CRANE, INDIANA

LOCATION	16SB096	16SB097	16SB097	16SB097	16SB098	16SB098	16SB099	16SB099	16SB118	16SB118	16SB119	16SB119	16SB120
SAMPLE ID	16SB0960406	16SB0970406	16SB0970607	16SB0970607-D	16SB0980206	16SB0980607	16SB0990206	16SB0990608	16SB1180206	16SB1180607	16SB1190406	16SB1190608	16SB1200406
SAMPLE DATE	20040816	20040816	20040816	20040816	20040816	20040816	20040816	20040816	20110824	20110824	20110824	20110824	20110824
ROUND	03	03	03	03	03	03	03	03					
EVENT													
SAMPLE CODE	NORMAL	NORMAL	NORMAL	DUP	NORMAL	NORMAL	NORMAL	NORMAL	NORMAL	NORMAL	NORMAL	NORMAL	NORMAL
MATRIX	SO	SO	SO	SO	SO	SO	SO	SO	SO	SO	SO	SO	SO
SAMPLE TYPE	NORMAL	NORMAL	NORMAL	NORMAL	NORMAL	NORMAL	NORMAL	NORMAL	NORMAL	NORMAL	NORMAL	NORMAL	NORMAL
SUBMATRIX	SB	SB	SB	SB	SB	SB	SB	SB	SB	SB	SB	SB	SB
TOP DEPTH	4	4	6	6	2	6	2	6	2	6	4	6	4
BOTTOM DEPTH	6	6	7	7	6	7	6	8	6	7	6	8	6
DIETHYL PHTHALATE													
DIMETHYL PHTHALATE													
DI-N-BUTYL PHTHALATE													
DI-N-OCTYL PHTHALATE													
DIPHENYLAMINE													
ETHYL METHANE SULFONATE													
FLUORANTHENE													
FLUORENE													
HEXACHLOROBENZENE													
HEXACHLOROBUTADIENE													
HEXACHLOROCYCLOPENTADIENE													
HEXACHLOROETHANE													
HEXACHLOROPROPENE													
INDENO(1,2,3-CD)PYRENE													
ISODRIN													
ISOPHORONE													
ISOSAFROLE													
KEPONE													
METHAPYRILENE													
METHYL METHANE SULFONATE													
NAPHTHALENE													
N-NITROSODIETHYLAMINE													
N-NITROSODIMETHYLAMINE													
N-NITROSO-DI-N-BUTYLAMINE													
N-NITROSO-DI-N-PROPYLAMINE													
N-NITROSOMETHYLETHYLAMINE													
N-NITROSOMORPHOLINE													
N-NITROSOPIPERIDINE													
N-NITROSOPYRROLIDINE													
O,O,O-TRIETHYL PHOSPHOROTHIOATE													
O-TOLUIDINE													
PENTACHLOROBENZENE													
PENTACHLOROETHANE													
PENTACHLORONITROBENZENE													
PHENACETIN													
PHENANTHRENE													
PHENOL													
PRONAMIDE													
PYRENE													
PYRIDINE													
SAFROLE													
SOLVENT YELLOW 2													
VOLATILES (UG/KG)													
1,1,1,2-TETRACHLOROETHANE	0.966 1.06	0.957 U	1.09 U	1.02 U	0.922 U	0.929 U	1.11 U	1.06 U					
1,1,1-TRICHLOROETHANE	0.966 1.06	0.957 U	1.09 U	1.02 U	0.922 U	0.929 U	1.11 U	1.06 U					
1,1,2,2-TETRACHLOROETHANE	0.966 1.06	0.957 U	1.09 U	1.02 U	0.922 U	0.929 U	1.11 U	1.06 U					
1,1,2-TRICHLOROETHANE	0.966 1.06	0.957 U	1.09 U	1.02 U	0.922 U	0.929 U	1.11 U	1.06 U	0.544 U	0.532 U	0.525 U	0.303 U	0.333 U
1,1,2-TRICHLOROTRIFLUOROETHANE													
1,1-DICHLOROETHANE	0.966 1.06	0.957 U	1.09 U	1.02 U	0.922 U	0.929 U	1.11 U	1.06 U					
1,1-DICHLOROETHENE	0.966 1.06	0.957 U	1.09 U	1.02 U	0.922 U	0.929 U	1.11 U	1.06 U					
1,2,3-TRICHLOROBENZENE													
1,2,3-TRICHLOROPROPANE	0.966 1.06	0.957 U	1.09 U	1.02 U	0.922 U	0.929 U	1.11 U	1.06 U					
1,2,4-TRICHLOROBENZENE													
1,2-DIBROMO-3-CHLOROPROPANE	0.966 1.06	0.957 U	1.09 U	1.02 U	0.922 U	0.929 U	1.11 U	1.06 U					
1,2-DIBROMOETHANE	0.966 1.06	0.957 U	1.09 U	1.02 U	0.922 U	0.929 U	1.11 U	1.06 U					
1,2-DICHLOROBENZENE													
1,2-DICHLOROETHANE	0.966 1.06	0.957 U	1.09 U	1.02 U	0.922 U	0.929 U	1.11 U	1.06 U					
1,2-DICHLOROPROPANE	0.966 1.06	0.957 U	1.09 U	1.02 U	0.922 U	0.929 U	1.11 U	1.06 U					
1,3-DICHLOROBENZENE													
1,4-DICHLOROBENZENE													
1,4-DIOXANE	96.6 101	95.7 U	105 U	97.6 U	108 U	95.1 U	99.8 U	111 U					
2-BUTANONE	0.966 1.06	0.957 U	1.09 U	1.02 U	0.922 U	0.929 U	1.11 U	1.06 U					
2-HEXANONE	0.966 1.06	0.957 U	1.09 U	1.02 U	0.922 U	0.929 U	1.11 U	1.06 U					
3-CHLOROPROPENE	0.966 1.06	0.957 U	1.09 U	1.02 U	0.922 U	0.929 U	1.11 U	1.06 U					
4-METHYL-2-PENTANONE	0.966 1.06	0.957 U	1.09 U	1.02 U	0.922 U	0.929 U	1.11 U	1.06 U					
ACETONE	0.966 1.06	0.957 U	1.09 U	1.02 U	0.922 U	0.929 U	1.11 U	1.06 U					
ACETONITRILE	38.6 40.4	38.3 U	41.9 U	39 U	43.2 U	38 U	39.9 U	44.3 U					

TABLE A-2

SUBSURFACE SOIL SAMPLE DATA
SWMU 16
NSA CRANE
CRANE, INDIANA

LOCATION	16SB096	16SB097	16SB097	16SB097	16SB098	16SB098	16SB099	16SB099	16SB118	16SB118	16SB119	16SB119	16SB120
SAMPLE ID	16SB0960406	16SB0970406	16SB0970607	16SB0970607-D	16SB0980206	16SB0980607	16SB0990206	16SB0990608	16SB1180206	16SB1180607	16SB1190406	16SB1190608	16SB1200406
SAMPLE DATE	20040816	20040816	20040816	20040816	20040816	20040816	20040816	20040816	20110824	20110824	20110824	20110824	20110824
ROUND	03	03	03	03	03	03	03	03					
EVENT													
SAMPLE CODE	NORMAL	NORMAL	NORMAL	DUP	NORMAL	NORMAL	NORMAL	NORMAL	NORMAL	NORMAL	NORMAL	NORMAL	NORMAL
MATRIX	SO	SO	SO	SO	SO	SO	SO	SO	SO	SO	SO	SO	SO
SAMPLE TYPE	NORMAL	NORMAL	NORMAL	NORMAL	NORMAL	NORMAL	NORMAL	NORMAL	NORMAL	NORMAL	NORMAL	NORMAL	NORMAL
SUBMATRIX	SB	SB	SB	SB	SB	SB	SB	SB	SB	SB	SB	SB	SB
TOP DEPTH	4	4	6	6	2	6	2	6	2	6	4	6	4
BOTTOM DEPTH	6	6	7	7	6	7	6	8	6	7	6	8	6
ACROLEIN	0.966 1.06	0.957 UR	1.09 UR	1.02 UR	0.922 UR	0.929 UR	1.11 UR	1.06 UR					
ACRYLONITRILE	0.966 1.06	0.957 U	1.09 U	1.02 U	0.922 U	0.929 U	1.11 U	1.06 U					
BENZENE	0.966 1.06	0.957 U	1.09 U	1.02 U	0.922 U	0.929 U	1.11 U	1.06 U					
BROMODICHLOROMETHANE	0.966 1.06	0.957 U	1.09 U	1.02 U	0.922 U	0.929 U	1.11 U	1.06 U					
BROMOFORM	0.966 1.06	0.957 U	1.09 U	1.02 U	0.922 U	0.929 U	1.11 U	1.06 U					
BROMOMETHANE	0.966 1.06	0.957 U	1.09 U	1.02 U	0.922 U	0.929 U	1.11 U	1.06 U					
CARBON DISULFIDE	0.966 1.06	0.957 U	1.09 U	1.02 U	0.922 U	0.929 U	1.11 U	1.06 U					
CARBON TETRACHLORIDE	0.966 1.06	0.957 U	1.09 U	1.02 U	0.922 U	0.929 U	1.11 U	1.06 U					
CHLOROBENZENE	0.966 1.06	0.957 U	1.09 U	1.02 U	0.922 U	0.929 U	1.11 U	1.06 U					
CHLORODIBROMOMETHANE	0.966 1.06	0.957 U	1.09 U	1.02 U	0.922 U	0.929 U	1.11 U	1.06 U					
CHLOROETHANE	0.966 1.06	0.957 U	1.09 U	1.02 U	0.922 U	0.929 U	1.11 U	1.06 U					
CHLOROFORM	2 1.06	12 J	1.09 U	1.02 U	0.922 U	0.929 U	1.11 U	1.06 U					
CHLOROMETHANE	0.966 1.06	0.957 U	1.09 U	1.02 U	0.922 U	0.929 U	1.11 U	1.06 U					
CHLOROPRENE	0.966 1.06	0.957 U	1.09 U	1.02 U	0.922 U	0.929 U	1.11 U	1.06 U					
CIS-1,2-DICHLOROETHENE	0.966 1.06	0.957 U	1.09 U	1.02 U	0.922 U	0.929 U	1.11 U	1.06 U	16.4	34.1	35.9	0.525	7.31 J
CIS-1,3-DICHLOROPROPENE	0.966 1.06	0.957 U	1.09 U	1.02 U	0.922 U	0.929 U	1.11 U	1.06 U					
CYCLOHEXANE													
DIBROMOMETHANE	0.966 1.06	0.957 U	1.09 U	1.02 U	0.922 U	0.929 U	1.11 U	1.06 U					
DICHLORODIFLUOROMETHANE	4 2	6	5	2 J	1 J	0.929 U	6 J	10 J					
ETHYL METHACRYLATE	0.966 1.06	0.957 U	1.09 U	1.02 U	0.922 U	0.929 U	1.11 U	1.06 U					
ETHYLBENZENE	0.966 1.06	0.957 U	1.09 U	1.02 U	0.922 U	0.929 U	1.11 U	1.06 U					
ISOBUTANOL	38.6 40.4	38.3 U	41.9 U	39 U	43.2 U	38 U	39.9 U	44.3 U					
ISOPROPYLBENZENE													
METHACRYLONITRILE	0.966 1.06	0.957 U	1.09 U	1.02 U	0.922 U	0.929 U	1.11 U	1.06 U					
METHYL ACETATE													
METHYL IODIDE	0.966 1.06	0.957 U	1.09 U	1.02 U	0.922 U	0.929 U	1.11 U	1.06 U					
METHYL METHACRYLATE	0.966 1.06	0.957 U	1.09 U	1.02 U	0.922 U	0.929 U	1.11 U	1.06 U					
METHYL TERT-BUTYL ETHER													
METHYLENE CHLORIDE	0.966 1.06	0.957 UJ	1.09 UJ	1.02 UJ	0.922 UJ	0.929 UJ	1.11 UJ	1.06 UJ					
PROPIONITRILE	38.6 40.4	38.3 U	41.9 U	39 U	43.2 U	38 U	39.9 U	44.3 U					
STYRENE	0.966 1.06	0.957 U	1.09 U	1.02 U	0.922 U	0.929 U	1.11 U	1.06 U					
TETRACHLOROETHENE	0.966 1.06	0.957 U	1.09 U	1.02 U	0.922 U	0.929 U	1.11 U	1.06 U					
TOLUENE	0.966 1.06	0.957 U	1.09 U	1.02 U	0.922 U	1 J	1.11 U	1.06 U					
TOTAL XYLENES	0.966 1.06	0.957 U	1.09 U	1.02 U	0.922 U	0.929 U	1.11 U	1.06 U					
TRANS-1,2-DICHLOROETHENE	0.966 1.06	0.957 U	1.09 U	1.02 U	0.922 U	0.929 U	1.11 U	1.06 U	0.308 J	0.55 J	1.1	0.303 U	0.344 J
TRANS-1,3-DICHLOROPROPENE	0.966 1.06	0.957 U	1.09 U	1.02 U	0.922 U	0.929 U	1.11 U	1.06 U					
TRANS-1,4-DICHLORO-2-BUTENE	0.966 1.06	0.957 U	1.09 U	1.02 U	0.922 U	0.929 U	1.11 U	1.06 U					
TRICHLOROETHENE	120 11	1200	88 J	8 J	140	200 J	630	160	4.03	16.1	4.02	0.333 U	5.6
TRICHLOROFLUOROMETHANE	0.966 1.06	0.957 U	1.09 U	1.02 U	0.922 U	0.929 U	1.11 U	1.06 U					
VINYL ACETATE	0.966 1.06	0.957 U	1.09 U	1.02 U	0.922 U	0.929 U	1.11 U	1.06 U					
VINYL CHLORIDE	0.966 1.06	0.957 U	1.09 U	1.02 U	0.922 U	0.929 U	1.11 U	1.06 U	0.544 U	0.31 J	0.823 J	0.303 U	0.333 U

TABLE A-2

SUBSURFACE SOIL SAMPLE DATA
SWMU 16
NSA CRANE
CRANE, INDIANA

LOCATION	16SB120	16SB120	16SB121	16SB121	16SB122	16SB122	16SB123	16SB123	16SB124	16SB124	16SB125	16SB125	16SB126
SAMPLE ID	16SB1200608	16SB1200608-D	16SB1210306	16SB1210607	16SB1220406	16SB1220910	16SB1230306	16SB1230608	16SB1240306	16SB1240911	16SB1250306	16SB1250607	16SB1260205
SAMPLE DATE	20110824	20110824	20110824	20110824	20110824	20110824	20110824	20110824	20110824	20110824	20110824	20110824	20110824
ROUND													
EVENT													
SAMPLE CODE	ORIG	DUP	NORMAL	NORMAL	NORMAL	NORMAL	NORMAL	NORMAL	NORMAL	NORMAL	NORMAL	NORMAL	NORMAL
MATRIX	SO	SO	SO	SO	SO	SO	SO	SO	SO	SO	SO	SO	SO
SAMPLE TYPE	NORMAL	NORMAL	NORMAL	NORMAL	NORMAL	NORMAL	NORMAL	NORMAL	NORMAL	NORMAL	NORMAL	NORMAL	NORMAL
SUBMATRIX	SB	SB	SB	SB	SB	SB	SB	SB	SB	SB	SB	SB	SB
TOP DEPTH	6	6	3	6	4	9	3	6	3	9	3	6	2
BOTTOM DEPTH	8	8	6	7	6	10	6	8	6	11	6	7	5
EXPLOSIVES (MG/KG)													
1,3,5-TRINITROBENZENE													
1,3-DINITROBENZENE													
2,4,6-TRINITROTOLUENE													
2,4-DINITROTOLUENE													
2,6-DINITROTOLUENE													
2-AMINO-4,6-DINITROTOLUENE													
2-NITROTOLUENE													
3-NITROTOLUENE													
4-AMINO-2,6-DINITROTOLUENE													
4-NITROTOLUENE													
HMX													
NITROBENZENE													
PICRAMIC ACID													
PICRIC ACID													
RDX													
TETRYL													
HERBICIDES (UG/KG)													
HEXACHLOROPHENE													
PENTACHLOROPHENOL													
METALS (MG/KG)													
ALUMINUM													
ANTIMONY													
ARSENIC													
BARIUM													
BERYLLIUM													
CADMIUM													
CALCIUM													
CHROMIUM													
COBALT													
COPPER													
IRON													
LEAD													
LITHIUM													
MAGNESIUM													
MANGANESE													
MERCURY													
NICKEL													
POTASSIUM													
SELENIUM													
SILVER													
SODIUM													
STRONTIUM													
THALLIUM													
TIN													
TITANIUM													
VANADIUM													
ZINC													
METALS (UG/KG)													
LEAD													
MISCELLANEOUS PARAMETERS (%)													
PERCENT MOISTURE	18		14	17	18	14	21	14	19	15	19	15	15
MISCELLANEOUS PARAMETERS (MEQ/100)													
CATION EXCHANGE CAPACITY													
MISCELLANEOUS PARAMETERS (MG/KG)													
TOTAL ORGANIC CARBON													
MISCELLANEOUS PARAMETERS (S.U.)													
PH													
PESTICIDES/PCBS (UG/KG)													
AROCLOR-1016													
AROCLOR-1221													
AROCLOR-1232													
AROCLOR-1242													
AROCLOR-1248													
AROCLOR-1254													
AROCLOR-1260													

TABLE A-2

SUBSURFACE SOIL SAMPLE DATA
SWMU 16
NSA CRANE
CRANE, INDIANA

LOCATION	16SB120	16SB120	16SB121	16SB121	16SB122	16SB122	16SB123	16SB123	16SB124	16SB124	16SB125	16SB125	16SB126
SAMPLE ID	16SB1200608	16SB1200608-D	16SB1210306	16SB1210607	16SB1220406	16SB1220910	16SB1230306	16SB1230608	16SB1240306	16SB1240911	16SB1250306	16SB1250607	16SB1260205
SAMPLE DATE	20110824	20110824	20110824	20110824	20110824	20110824	20110824	20110824	20110824	20110824	20110824	20110824	20110824
ROUND													
EVENT													
SAMPLE CODE	ORIG	DUP	NORMAL	NORMAL	NORMAL	NORMAL	NORMAL	NORMAL	NORMAL	NORMAL	NORMAL	NORMAL	NORMAL
MATRIX	SO	SO	SO	SO	SO	SO	SO	SO	SO	SO	SO	SO	SO
SAMPLE TYPE	NORMAL	NORMAL	NORMAL	NORMAL	NORMAL	NORMAL	NORMAL	NORMAL	NORMAL	NORMAL	NORMAL	NORMAL	NORMAL
SUBMATRIX	SB	SB	SB	SB	SB	SB	SB	SB	SB	SB	SB	SB	SB
TOP DEPTH	6	6	3	6	4	9	3	6	3	9	3	6	2
BOTTOM DEPTH	8	8	6	7	6	10	6	8	6	11	6	7	5
PETROLEUM HYDROCARBONS (UG/KG)													
DRO (C08-C28)													
TPH (C06-C12)													
SEMIVOLATILES (UG/KG)													
1,2,4,5-TETRACHLOROBENZENE													
1,2,4-TRICHLOROBENZENE													
1,2-DICHLOROBENZENE													
1,3-DICHLOROBENZENE													
1,4-DICHLOROBENZENE													
1,4-NAPHTHOQUINONE													
1,4-PHENYLENEDIAMINE													
1-NAPHTHYLAMINE													
2,2'-OXYBIS(1-CHLOROPROPANE)													
2,3,4,6-TETRACHLOROPHENOL													
2,4,5-TRICHLOROPHENOL													
2,4,6-TRICHLOROPHENOL													
2,4-DICHLOROPHENOL													
2,4-DIMETHYLPHENOL													
2,4-DINITROPHENOL													
2,6-DICHLOROPHENOL													
2-ACETYLAMINOFLUORENE													
2-CHLORONAPHTHALENE													
2-CHLOROPHENOL													
2-METHYLNAPHTHALENE													
2-METHYLPHENOL													
2-NAPHTHYLAMINE													
2-NITROANILINE													
2-NITROPHENOL													
2-PICOLINE													
3&4-METHYLPHENOL													
3,3'-DICHLOROBENZIDINE													
3,3'-DIMETHYLBENZIDINE													
3-METHYLCHOLANTHRENE													
3-NITROANILINE													
4,6-DINITRO-2-METHYLPHENOL													
4-AMINOBIPHENYL													
4-BROMOPHENYL PHENYL ETHER													
4-CHLORO-3-METHYLPHENOL													
4-CHLOROANILINE													
4-CHLOROPHENYL PHENYL ETHER													
4-NITROANILINE													
4-NITROPHENOL													
4-NITROQUINOLINE-1-OXIDE													
5-NITRO-O-TOLUIDINE													
7,12-DIMETHYLBENZ(A)ANTHRACENE													
A,A-DIMETHYLPHENETHYLAMINE													
ACENAPHTHENE													
ACENAPHTHYLENE													
ACETOPHENONE													
ANILINE													
ANTHRACENE													
ARAMITE													
BENZO(A)ANTHRACENE													
BENZO(A)PYRENE													
BENZO(B)FLUORANTHENE													
BENZO(G,H,I)PERYLENE													
BENZO(K)FLUORANTHENE													
BENZYL ALCOHOL													
BIS(2-CHLOROETHOXY)METHANE													
BIS(2-CHLOROETHYL)ETHER													
BIS(2-ETHYLHEXYL)PHTHALATE													
BUTYL BENZYL PHTHALATE													
CHLOROBENZILATE													
CHRYSENE													
DIALLATE													
DIBENZO(A,H)ANTHRACENE													
DIBENZOFURAN													

TABLE A-2

SUBSURFACE SOIL SAMPLE DATA
SWMU 16
NSA CRANE
CRANE, INDIANA

LOCATION	16SB120	16SB120	16SB121	16SB121	16SB122	16SB122	16SB123	16SB123	16SB124	16SB124	16SB125	16SB125	16SB126
SAMPLE ID	16SB1200608	16SB1200608-D	16SB1210306	16SB1210607	16SB1220406	16SB1220910	16SB1230306	16SB1230608	16SB1240306	16SB1240911	16SB1250306	16SB1250607	16SB1260205
SAMPLE DATE	20110824	20110824	20110824	20110824	20110824	20110824	20110824	20110824	20110824	20110824	20110824	20110824	20110824
ROUND													
EVENT													
SAMPLE CODE	ORIG	DUP	NORMAL	NORMAL	NORMAL	NORMAL	NORMAL	NORMAL	NORMAL	NORMAL	NORMAL	NORMAL	NORMAL
MATRIX	SO	SO	SO	SO	SO	SO	SO	SO	SO	SO	SO	SO	SO
SAMPLE TYPE	NORMAL	NORMAL	NORMAL	NORMAL	NORMAL	NORMAL	NORMAL	NORMAL	NORMAL	NORMAL	NORMAL	NORMAL	NORMAL
SUBMATRIX	SB	SB	SB	SB	SB	SB	SB	SB	SB	SB	SB	SB	SB
TOP DEPTH	6	6	3	6	4	9	3	6	3	9	3	6	2
BOTTOM DEPTH	8	8	6	7	6	10	6	8	6	11	6	7	5
DIETHYL PHTHALATE													
DIMETHYL PHTHALATE													
DI-N-BUTYL PHTHALATE													
DI-N-OCTYL PHTHALATE													
DIPHENYLAMINE													
ETHYL METHANE SULFONATE													
FLUORANTHENE													
FLUORENE													
HEXACHLOROBENZENE													
HEXACHLOROBUTADIENE													
HEXACHLOROCYCLOPENTADIENE													
HEXACHLOROETHANE													
HEXACHLOROPROPENE													
INDENO(1,2,3-CD)PYRENE													
ISODRIN													
ISOPHORONE													
ISOSAFROLE													
KEPONE													
METHAPYRILENE													
METHYL METHANE SULFONATE													
NAPHTHALENE													
N-NITROSODIETHYLAMINE													
N-NITROSODIMETHYLAMINE													
N-NITROSO-DI-N-BUTYLAMINE													
N-NITROSO-DI-N-PROPYLAMINE													
N-NITROSOMETHYLETHYLAMINE													
N-NITROSOMORPHOLINE													
N-NITROSOPIPERIDINE													
N-NITROSOPYRROLIDINE													
O,O,O-TRIETHYL PHOSPHOROTHIOATE													
O-TOLUIDINE													
PENTACHLOROBENZENE													
PENTACHLOROETHANE													
PENTACHLORONITROBENZENE													
PHENACETIN													
PHENANTHRENE													
PHENOL													
PRONAMIDE													
PYRENE													
PYRIDINE													
SAFROLE													
SOLVENT YELLOW 2													
VOLATILES (UG/KG)													
1,1,1,2-TETRACHLOROETHANE													
1,1,1-TRICHLOROETHANE													
1,1,2,2-TETRACHLOROETHANE													
1,1,2-TRICHLOROETHANE	0.311 U	0.5251 U	0.300 U	0.532 U	0.312 U	0.548 U							
1,1,2-TRICHLOROTRIFLUOROETHANE													
1,1-DICHLOROETHANE							0.59 U	0.55 U	0.63 U	0.56 U	0.59 U	0.56 U	0.6 U
1,1-DICHLOROETHENE													
1,2,3-TRICHLOROBENZENE													
1,2,3-TRICHLOROPROPANE													
1,2,4-TRICHLOROBENZENE													
1,2-DIBROMO-3-CHLOROPROPANE													
1,2-DIBROMOETHANE													
1,2-DICHLOROBENZENE													
1,2-DICHLOROETHANE													
1,2-DICHLOROPROPANE													
1,3-DICHLOROBENZENE													
1,4-DICHLOROBENZENE													
1,4-DIOXANE													
2-BUTANONE													
2-HEXANONE													
3-CHLOROPROPENE													
4-METHYL-2-PENTANONE													
ACETONE													
ACETONITRILE													

TABLE A-2

SUBSURFACE SOIL SAMPLE DATA
SWMU 16
NSA CRANE
CRANE, INDIANA

LOCATION	16SB120	16SB120	16SB121	16SB121	16SB122	16SB122	16SB123	16SB123	16SB124	16SB124	16SB125	16SB125	16SB126
SAMPLE ID	16SB1200608	16SB1200608-D	16SB1210306	16SB1210607	16SB1220406	16SB1220910	16SB1230306	16SB1230608	16SB1240306	16SB1240911	16SB1250306	16SB1250607	16SB1260205
SAMPLE DATE	20110824	20110824	20110824	20110824	20110824	20110824	20110824	20110824	20110824	20110824	20110824	20110824	20110824
ROUND													
EVENT													
SAMPLE CODE	ORIG	DUP	NORMAL	NORMAL	NORMAL	NORMAL	NORMAL	NORMAL	NORMAL	NORMAL	NORMAL	NORMAL	NORMAL
MATRIX	SO	SO	SO	SO	SO	SO	SO	SO	SO	SO	SO	SO	SO
SAMPLE TYPE	NORMAL	NORMAL	NORMAL	NORMAL	NORMAL	NORMAL	NORMAL	NORMAL	NORMAL	NORMAL	NORMAL	NORMAL	NORMAL
SUBMATRIX	SB	SB	SB	SB	SB	SB	SB	SB	SB	SB	SB	SB	SB
TOP DEPTH	6	6	3	6	4	9	3	6	3	9	3	6	2
BOTTOM DEPTH	8	8	6	7	6	10	6	8	6	11	6	7	5
ACROLEIN													
ACRYLONITRILE													
BENZENE													
BROMODICHLOROMETHANE													
BROMOFORM													
BROMOMETHANE													
CARBON DISULFIDE													
CARBON TETRACHLORIDE													
CHLOROBENZENE													
CHLORODIBROMOMETHANE													
CHLOROETHANE													
CHLOROFORM													
CHLOROMETHANE													
CHLOROPRENE													
CIS-1,2-DICHLOROETHENE	17.6 J	49.45 J	2.77	1.91	2.78	11.2	120	63	20	12	41	23	0.6 U
CIS-1,3-DICHLOROPROPENE													
CYCLOHEXANE													
DIBROMOMETHANE													
DICHLORODIFLUOROMETHANE													
ETHYL METHACRYLATE													
ETHYLBENZENE													
ISOBUTANOL													
ISOPROPYLBENZENE													
METHACRYLONITRILE													
METHYL ACETATE													
METHYL IODIDE													
METHYL METHACRYLATE													
METHYL TERT-BUTYL ETHER													
METHYLENE CHLORIDE													
PROPIONITRILE													
STYRENE													
TETRACHLOROETHENE													
TOLUENE													
TOTAL XYLENES													
TRANS-1,2-DICHLOROETHENE	0.368 J	2.14 J	0.300 U	0.532 U	0.312 U	0.548 U	13	7	0.57 J	0.56 U	1	0.67 J	0.6 U
TRANS-1,3-DICHLOROPROPENE													
TRANS-1,4-DICHLORO-2-BUTENE													
TRICHLOROETHENE	2.13 J	6.68 J	0.904	1.06	1.9	4.39	190	150	110	63	95	57	0.6 U
TRICHLOROFLUOROMETHANE													
VINYL ACETATE													
VINYL CHLORIDE	0.311 U	0.7956 J	0.300 U	0.532 U	0.312 U	0.548 U	2	1	0.63 U	0.56 U	0.59 U	0.56 U	0.6 U

TABLE A-2

SUBSURFACE SOIL SAMPLE DATA
SWMU 16
NSA CRANE
CRANE, INDIANA

LOCATION	16SB127	16SB128	16SB128	16SB129	16SB130	16SB130	16SB131	16SB132	16SB132	16SB133	16SB134	16SB134	16SB135
SAMPLE ID	16SB1270206	16SB1280206	16SB1280607	16SB1290206	16SB1300206	16SB1300607	16SB1310206	16SB1320206	16SB1320608	16SB1330206	16SB1340206	16SB1340607	16SB1350206
SAMPLE DATE	20110824	20110824	20110824	20110824	20110824	20110824	20110824	20110824	20110824	20110824	20110824	20110824	20110824
ROUND													
EVENT													
SAMPLE CODE	NORMAL	NORMAL	NORMAL	NORMAL	NORMAL	NORMAL	NORMAL	NORMAL	NORMAL	NORMAL	NORMAL	NORMAL	NORMAL
MATRIX	SO	SO	SO	SO	SO	SO	SO	SO	SO	SO	SO	SO	SO
SAMPLE TYPE	NORMAL	NORMAL	NORMAL	NORMAL	NORMAL	NORMAL	NORMAL	NORMAL	NORMAL	NORMAL	NORMAL	NORMAL	NORMAL
SUBMATRIX	SB	SB	SB	SB	SB	SB	SB	SB	SB	SB	SB	SB	SB
TOP DEPTH	2	2	6	2	2	6	2	2	6	2	2	6	2
BOTTOM DEPTH	6	6	7	6	6	7	6	6	8	6	6	7	6
EXPLOSIVES (MG/KG)													
1,3,5-TRINITROBENZENE													
1,3-DINITROBENZENE													
2,4,6-TRINITROTOLUENE													
2,4-DINITROTOLUENE													
2,6-DINITROTOLUENE													
2-AMINO-4,6-DINITROTOLUENE													
2-NITROTOLUENE													
3-NITROTOLUENE													
4-AMINO-2,6-DINITROTOLUENE													
4-NITROTOLUENE													
HMX													
NITROBENZENE													
PICRAMIC ACID													
PICRIC ACID													
RDX													
TETRYL													
HERBICIDES (UG/KG)													
HEXACHLOROPHENE													
PENTACHLOROPHENOL													
METALS (MG/KG)													
ALUMINUM													
ANTIMONY													
ARSENIC													
BARIUM													
BERYLLIUM													
CADMIUM													
CALCIUM													
CHROMIUM													
COBALT													
COPPER													
IRON													
LEAD													
LITHIUM													
MAGNESIUM													
MANGANESE													
MERCURY													
NICKEL													
POTASSIUM													
SELENIUM													
SILVER													
SODIUM													
STRONTIUM													
THALLIUM													
TIN													
TITANIUM													
VANADIUM													
ZINC													
METALS (UG/KG)													
LEAD													
MISCELLANEOUS PARAMETERS (%)													
PERCENT MOISTURE	17	13	17	13	13	17	13						
MISCELLANEOUS PARAMETERS (MEQ/100)													
CATION EXCHANGE CAPACITY													
MISCELLANEOUS PARAMETERS (MG/KG)													
TOTAL ORGANIC CARBON													
MISCELLANEOUS PARAMETERS (S.U.)													
PH													
PESTICIDES/PCBS (UG/KG)													
AROCLOR-1016													
AROCLOR-1221													
AROCLOR-1232													
AROCLOR-1242													
AROCLOR-1248													
AROCLOR-1254													
AROCLOR-1260													

TABLE A-2

SUBSURFACE SOIL SAMPLE DATA
SWMU 16
NSA CRANE
CRANE, INDIANA

LOCATION	16SB127	16SB128	16SB128	16SB129	16SB130	16SB130	16SB131	16SB132	16SB132	16SB133	16SB134	16SB134	16SB135
SAMPLE ID	16SB1270206	16SB1280206	16SB1280607	16SB1290206	16SB1300206	16SB1300607	16SB1310206	16SB1320206	16SB1320608	16SB1330206	16SB1340206	16SB1340607	16SB1350206
SAMPLE DATE	20110824	20110824	20110824	20110824	20110824	20110824	20110824	20110824	20110824	20110824	20110824	20110824	20110824
ROUND													
EVENT													
SAMPLE CODE	NORMAL	NORMAL	NORMAL	NORMAL	NORMAL	NORMAL	NORMAL	NORMAL	NORMAL	NORMAL	NORMAL	NORMAL	NORMAL
MATRIX	SO	SO	SO	SO	SO	SO	SO	SO	SO	SO	SO	SO	SO
SAMPLE TYPE	NORMAL	NORMAL	NORMAL	NORMAL	NORMAL	NORMAL	NORMAL	NORMAL	NORMAL	NORMAL	NORMAL	NORMAL	NORMAL
SUBMATRIX	SB	SB	SB	SB	SB	SB	SB	SB	SB	SB	SB	SB	SB
TOP DEPTH	2	2	6	2	2	6	2	2	6	2	2	6	2
BOTTOM DEPTH	6	6	7	6	6	7	6	6	8	6	6	7	6
PETROLEUM HYDROCARBONS (UG/KG)													
DRO (C08-C28)													
TPH (C06-C12)													
SEMIVOLATILES (UG/KG)													
1,2,4,5-TETRACHLOROBENZENE													
1,2,4-TRICHLOROBENZENE													
1,2-DICHLOROBENZENE													
1,3-DICHLOROBENZENE													
1,4-DICHLOROBENZENE													
1,4-NAPHTHOQUINONE													
1,4-PHENYLENEDIAMINE													
1-NAPHTHYLAMINE													
2,2'-OXYBIS(1-CHLOROPROPANE)													
2,3,4,6-TETRACHLOROPHENOL													
2,4,5-TRICHLOROPHENOL													
2,4,6-TRICHLOROPHENOL													
2,4-DICHLOROPHENOL													
2,4-DIMETHYLPHENOL													
2,4-DINITROPHENOL													
2,6-DICHLOROPHENOL													
2-ACETYLAMINOFLUORENE													
2-CHLORONAPHTHALENE													
2-CHLOROPHENOL													
2-METHYLNAPHTHALENE													
2-METHYLPHENOL													
2-NAPHTHYLAMINE													
2-NITROANILINE													
2-NITROPHENOL													
2-PICOLINE													
3&4-METHYLPHENOL													
3,3'-DICHLOROBENZIDINE													
3,3'-DIMETHYLBENZIDINE													
3-METHYLCHOLANTHRENE													
3-NITROANILINE													
4,6-DINITRO-2-METHYLPHENOL													
4-AMINOBIPHENYL													
4-BROMOPHENYL PHENYL ETHER													
4-CHLORO-3-METHYLPHENOL													
4-CHLOROANILINE													
4-CHLOROPHENYL PHENYL ETHER													
4-NITROANILINE													
4-NITROPHENOL													
4-NITROQUINOLINE-1-OXIDE													
5-NITRO-O-TOLUIDINE													
7,12-DIMETHYLBENZ(A)ANTHRACENE													
A,A-DIMETHYLPHENETHYLAMINE													
ACENAPHTHENE													
ACENAPHTHYLENE													
ACETOPHENONE													
ANILINE													
ANTHRACENE													
ARAMITE													
BENZO(A)ANTHRACENE													
BENZO(A)PYRENE													
BENZO(B)FLUORANTHENE													
BENZO(G,H,I)PERYLENE													
BENZO(K)FLUORANTHENE													
BENZYL ALCOHOL													
BIS(2-CHLOROETHOXY)METHANE													
BIS(2-CHLOROETHYL)ETHER													
BIS(2-ETHYLHEXYL)PHTHALATE													
BUTYL BENZYL PHTHALATE													
CHLOROBENZILATE													
CHRYSENE													
DIALLATE													
DIBENZO(A,H)ANTHRACENE													
DIBENZOFURAN													

TABLE A-2

SUBSURFACE SOIL SAMPLE DATA
SWMU 16
NSA CRANE
CRANE, INDIANA

LOCATION	16SB127	16SB128	16SB128	16SB129	16SB130	16SB130	16SB131	16SB132	16SB132	16SB133	16SB134	16SB134	16SB135
SAMPLE ID	16SB1270206	16SB1280206	16SB1280607	16SB1290206	16SB1300206	16SB1300607	16SB1310206	16SB1320206	16SB1320608	16SB1330206	16SB1340206	16SB1340607	16SB1350206
SAMPLE DATE	20110824	20110824	20110824	20110824	20110824	20110824	20110824	20110824	20110824	20110824	20110824	20110824	20110824
ROUND													
EVENT													
SAMPLE CODE	NORMAL	NORMAL	NORMAL	NORMAL	NORMAL	NORMAL	NORMAL	NORMAL	NORMAL	NORMAL	NORMAL	NORMAL	NORMAL
MATRIX	SO	SO	SO	SO	SO	SO	SO	SO	SO	SO	SO	SO	SO
SAMPLE TYPE	NORMAL	NORMAL	NORMAL	NORMAL	NORMAL	NORMAL	NORMAL	NORMAL	NORMAL	NORMAL	NORMAL	NORMAL	NORMAL
SUBMATRIX	SB	SB	SB	SB	SB	SB	SB	SB	SB	SB	SB	SB	SB
TOP DEPTH	2	2	6	2	2	6	2	2	6	2	2	6	2
BOTTOM DEPTH	6	6	7	6	6	7	6	6	8	6	6	7	6
DIETHYL PHTHALATE													
DIMETHYL PHTHALATE													
DI-N-BUTYL PHTHALATE													
DI-N-OCTYL PHTHALATE													
DIPHENYLAMINE													
ETHYL METHANE SULFONATE													
FLUORANTHENE													
FLUORENE													
HEXACHLOROBENZENE													
HEXACHLOROBUTADIENE													
HEXACHLOROCYCLOPENTADIENE													
HEXACHLOROETHANE													
HEXACHLOROPROPENE													
INDENO(1,2,3-CD)PYRENE													
ISODRIN													
ISOPHORONE													
ISOSAFROLE													
KEPONE													
METHAPYRILENE													
METHYL METHANE SULFONATE													
NAPHTHALENE													
N-NITROSODIETHYLAMINE													
N-NITROSODIMETHYLAMINE													
N-NITROSO-DI-N-BUTYLAMINE													
N-NITROSO-DI-N-PROPYLAMINE													
N-NITROSOMETHYLETHYLAMINE													
N-NITROSOMORPHOLINE													
N-NITROSOPIPERIDINE													
N-NITROSOPYRROLIDINE													
O,O,O-TRIETHYL PHOSPHOROTHIOATE													
O-TOLUIDINE													
PENTACHLOROBENZENE													
PENTACHLOROETHANE													
PENTACHLORONITROBENZENE													
PHENACETIN													
PHENANTHRENE													
PHENOL													
PRONAMIDE													
PYRENE													
PYRIDINE													
SAFROLE													
SOLVENT YELLOW 2													
VOLATILES (UG/KG)													
1,1,1,2-TETRACHLOROETHANE													
1,1,1-TRICHLOROETHANE													
1,1,2,2-TETRACHLOROETHANE													
1,1,2-TRICHLOROETHANE								0.487 U	0.493 U	0.502 U	0.484 U	0.539 U	0.48 U
1,1,2-TRICHLOROTRIFLUOROETHANE													
1,1-DICHLOROETHANE	0.54 U	0.52 U	0.57 U	0.52 U	0.52 U	0.73 U	0.69 U						
1,1-DICHLOROETHENE													
1,2,3-TRICHLOROBENZENE													
1,2,3-TRICHLOROPROPANE													
1,2,4-TRICHLOROBENZENE													
1,2-DIBROMO-3-CHLOROPROPANE													
1,2-DIBROMOETHANE													
1,2-DICHLOROBENZENE													
1,2-DICHLOROETHANE													
1,2-DICHLOROPROPANE													
1,3-DICHLOROBENZENE													
1,4-DICHLOROBENZENE													
1,4-DIOXANE													
2-BUTANONE													
2-HEXANONE													
3-CHLOROPROPENE													
4-METHYL-2-PENTANONE													
ACETONE													
ACETONITRILE													

TABLE A-2

SUBSURFACE SOIL SAMPLE DATA
SWMU 16
NSA CRANE
CRANE, INDIANA

LOCATION	16SB127	16SB128	16SB128	16SB129	16SB130	16SB130	16SB131	16SB132	16SB132	16SB133	16SB134	16SB134	16SB135
SAMPLE ID	16SB1270206	16SB1280206	16SB1280607	16SB1290206	16SB1300206	16SB1300607	16SB1310206	16SB1320206	16SB1320608	16SB1330206	16SB1340206	16SB1340607	16SB1350206
SAMPLE DATE	20110824	20110824	20110824	20110824	20110824	20110824	20110824	20110824	20110824	20110824	20110824	20110824	20110824
ROUND													
EVENT													
SAMPLE CODE	NORMAL	NORMAL	NORMAL	NORMAL	NORMAL	NORMAL	NORMAL	NORMAL	NORMAL	NORMAL	NORMAL	NORMAL	NORMAL
MATRIX	SO	SO	SO	SO	SO	SO	SO	SO	SO	SO	SO	SO	SO
SAMPLE TYPE	NORMAL	NORMAL	NORMAL	NORMAL	NORMAL	NORMAL	NORMAL	NORMAL	NORMAL	NORMAL	NORMAL	NORMAL	NORMAL
SUBMATRIX	SB	SB	SB	SB	SB	SB	SB	SB	SB	SB	SB	SB	SB
TOP DEPTH	2	2	6	2	2	6	2	2	6	2	2	6	2
BOTTOM DEPTH	6	6	7	6	6	7	6	6	8	6	6	7	6
ACROLEIN													
ACRYLONITRILE													
BENZENE													
BROMODICHLOROMETHANE													
BROMOFORM													
BROMOMETHANE													
CARBON DISULFIDE													
CARBON TETRACHLORIDE													
CHLOROBENZENE													
CHLORODIBROMOMETHANE													
CHLOROETHANE													
CHLOROFORM													
CHLOROMETHANE													
CHLOROPRENE													
CIS-1,2-DICHLOROETHENE	0.54 U	0.52 U	0.57 U	0.52 U	0.52 U	0.48 J	0.69 U	0.487 U	0.493 U	0.502 U	0.484 U	0.647 J	4.86
CIS-1,3-DICHLOROPROPENE													
CYCLOHEXANE													
DIBROMOMETHANE													
DICHLORODIFLUOROMETHANE													
ETHYL METHACRYLATE													
ETHYLBENZENE													
ISOBUTANOL													
ISOPROPYLBENZENE													
METHACRYLONITRILE													
METHYL ACETATE													
METHYL IODIDE													
METHYL METHACRYLATE													
METHYL TERT-BUTYL ETHER													
METHYLENE CHLORIDE													
PROPIONITRILE													
STYRENE													
TETRACHLOROETHENE													
TOLUENE													
TOTAL XYLENES													
TRANS-1,2-DICHLOROETHENE	0.54 U	0.52 U	0.57 U	0.52 U	0.52 U	0.73 U	0.69 U	0.487 U	0.493 U	0.502 U	0.484 U	0.539 U	4.28
TRANS-1,3-DICHLOROPROPENE													
TRANS-1,4-DICHLORO-2-BUTENE													
TRICHLOROETHENE	44	18	41	65	27	160	37	1.2	2.99	0.561 J	62.7	780	96.6 J
TRICHLOROFLUOROMETHANE													
VINYL ACETATE													
VINYL CHLORIDE	0.54 U	0.52 U	0.57 U	0.52 U	0.52 U	0.73 U	0.69 U	0.487 U	0.493 U	0.502 U	0.484 U	0.539 U	0.48 U

TABLE A-2

SUBSURFACE SOIL SAMPLE DATA
SWMU 16
NSA CRANE
CRANE, INDIANA

LOCATION	16SB136	16SB136	16SB137	16SB137	16SB138	16SB138	16SB139	16SB140	16SB141	16SB141	16SB142	16SB143	16SB143
SAMPLE ID	16SB1360206	16SB1360607	16SB1370205	16SB1370205-D	16SB1380206	16SB1380608	16SB1390206	16SB1400206	16SB1410206	16SB1410709	16SB1420204	16SB1430205	16SB1430205-D
SAMPLE DATE	20110824	20110824	20110824	20110824	20110824	20110824	20110824	20110824	20110825	20110825	20110825	20110825	20110826
ROUND													
EVENT													
SAMPLE CODE	NORMAL	NORMAL	ORIG	DUP	NORMAL	NORMAL	NORMAL	NORMAL	NORMAL	NORMAL	NORMAL	ORIG	DUP
MATRIX	SO	SO	SO	SO	SO	SO	SO	SO	SO	SO	SO	SO	SO
SAMPLE TYPE	NORMAL	NORMAL	NORMAL	NORMAL	NORMAL	NORMAL	NORMAL	NORMAL	NORMAL	NORMAL	NORMAL	NORMAL	NORMAL
SUBMATRIX	SB	SB	SB	SB	SB	SB	SB	SB	SB	SB	SB	SB	SB
TOP DEPTH	2	6	2	2	2	6	2	2	2	7	2	2	2
BOTTOM DEPTH	6	7	5	5	6	8	6	6	6	9	4	5	5
EXPLOSIVES (MG/KG)													
1,3,5-TRINITROBENZENE													
1,3-DINITROBENZENE													
2,4,6-TRINITROTOLUENE													
2,4-DINITROTOLUENE													
2,6-DINITROTOLUENE													
2-AMINO-4,6-DINITROTOLUENE													
2-NITROTOLUENE													
3-NITROTOLUENE													
4-AMINO-2,6-DINITROTOLUENE													
4-NITROTOLUENE													
HMX													
NITROBENZENE													
PICRAMIC ACID													
PICRIC ACID													
RDX													
TETRYL													
HERBICIDES (UG/KG)													
HEXACHLOROPHENE													
PENTACHLOROPHENOL													
METALS (MG/KG)													
ALUMINUM													
ANTIMONY													
ARSENIC													
BARIUM													
BERYLLIUM													
CADMIUM													
CALCIUM													
CHROMIUM													
COBALT													
COPPER													
IRON													
LEAD													
LITHIUM													
MAGNESIUM													
MANGANESE													
MERCURY													
NICKEL													
POTASSIUM													
SELENIUM													
SILVER													
SODIUM													
STRONTIUM													
THALLIUM													
TIN													
TITANIUM													
VANADIUM													
ZINC													
METALS (UG/KG)													
LEAD													
MISCELLANEOUS PARAMETERS (%)													
PERCENT MOISTURE													
MISCELLANEOUS PARAMETERS (MEQ/100)													
CATION EXCHANGE CAPACITY													
MISCELLANEOUS PARAMETERS (MG/KG)													
TOTAL ORGANIC CARBON													
MISCELLANEOUS PARAMETERS (S.U.)													
PH													
PESTICIDES/PCBS (UG/KG)													
AROCLOR-1016													
AROCLOR-1221													
AROCLOR-1232													
AROCLOR-1242													
AROCLOR-1248													
AROCLOR-1254													
AROCLOR-1260													

TABLE A-2

SUBSURFACE SOIL SAMPLE DATA
SWMU 16
NSA CRANE
CRANE, INDIANA

LOCATION	16SB136	16SB136	16SB137	16SB137	16SB138	16SB138	16SB139	16SB140	16SB141	16SB141	16SB142	16SB143	16SB143
SAMPLE ID	16SB1360206	16SB1360607	16SB1370205	16SB1370205-D	16SB1380206	16SB1380608	16SB1390206	16SB1400206	16SB1410206	16SB1410709	16SB1420204	16SB1430205	16SB1430205-D
SAMPLE DATE	20110824	20110824	20110824	20110824	20110824	20110824	20110824	20110824	20110825	20110825	20110825	20110825	20110826
ROUND													
EVENT													
SAMPLE CODE	NORMAL	NORMAL	ORIG	DUP	NORMAL	NORMAL	NORMAL	NORMAL	NORMAL	NORMAL	NORMAL	ORIG	DUP
MATRIX	SO	SO	SO	SO	SO	SO	SO	SO	SO	SO	SO	SO	SO
SAMPLE TYPE	NORMAL	NORMAL	NORMAL	NORMAL	NORMAL	NORMAL	NORMAL	NORMAL	NORMAL	NORMAL	NORMAL	NORMAL	NORMAL
SUBMATRIX	SB	SB	SB	SB	SB	SB	SB	SB	SB	SB	SB	SB	SB
TOP DEPTH	2	6	2	2	2	6	2	2	2	7	2	2	2
BOTTOM DEPTH	6	7	5	5	6	8	6	6	6	9	4	5	5
PETROLEUM HYDROCARBONS (UG/KG)													
DRO (C08-C28)													
TPH (C06-C12)													
SEMIVOLATILES (UG/KG)													
1,2,4,5-TETRACHLOROBENZENE													
1,2,4-TRICHLOROBENZENE													
1,2-DICHLOROBENZENE													
1,3-DICHLOROBENZENE													
1,4-DICHLOROBENZENE													
1,4-NAPHTHOQUINONE													
1,4-PHENYLENEDIAMINE													
1-NAPHTHYLAMINE													
2,2'-OXYBIS(1-CHLOROPROPANE)													
2,3,4,6-TETRACHLOROPHENOL													
2,4,5-TRICHLOROPHENOL													
2,4,6-TRICHLOROPHENOL													
2,4-DICHLOROPHENOL													
2,4-DIMETHYLPHENOL													
2,4-DINITROPHENOL													
2,6-DICHLOROPHENOL													
2-ACETYLAMINOFLUORENE													
2-CHLORONAPHTHALENE													
2-CHLOROPHENOL													
2-METHYLNAPHTHALENE													
2-METHYLPHENOL													
2-NAPHTHYLAMINE													
2-NITROANILINE													
2-NITROPHENOL													
2-PICOLINE													
3&4-METHYLPHENOL													
3,3'-DICHLOROBENZIDINE													
3,3'-DIMETHYLBENZIDINE													
3-METHYLCHOLANTHRENE													
3-NITROANILINE													
4,6-DINITRO-2-METHYLPHENOL													
4-AMINOBIPHENYL													
4-BROMOPHENYL PHENYL ETHER													
4-CHLORO-3-METHYLPHENOL													
4-CHLOROANILINE													
4-CHLOROPHENYL PHENYL ETHER													
4-NITROANILINE													
4-NITROPHENOL													
4-NITROQUINOLINE-1-OXIDE													
5-NITRO-O-TOLUIDINE													
7,12-DIMETHYLBENZ(A)ANTHRACENE													
A,A-DIMETHYLPHENETHYLAMINE													
ACENAPHTHENE													
ACENAPHTHYLENE													
ACETOPHENONE													
ANILINE													
ANTHRACENE													
ARAMITE													
BENZO(A)ANTHRACENE													
BENZO(A)PYRENE													
BENZO(B)FLUORANTHENE													
BENZO(G,H,I)PERYLENE													
BENZO(K)FLUORANTHENE													
BENZYL ALCOHOL													
BIS(2-CHLOROETHOXY)METHANE													
BIS(2-CHLOROETHYL)ETHER													
BIS(2-ETHYLHEXYL)PHTHALATE													
BUTYL BENZYL PHTHALATE													
CHLOROBENZILATE													
CHRYSENE													
DIALLATE													
DIBENZO(A,H)ANTHRACENE													
DIBENZOFURAN													

TABLE A-2

SUBSURFACE SOIL SAMPLE DATA
SWMU 16
NSA CRANE
CRANE, INDIANA

LOCATION	16SB136	16SB136	16SB137	16SB137	16SB138	16SB138	16SB139	16SB140	16SB141	16SB141	16SB142	16SB143	16SB143
SAMPLE ID	16SB1360206	16SB1360607	16SB1370205	16SB1370205-D	16SB1380206	16SB1380608	16SB1390206	16SB1400206	16SB1410206	16SB1410709	16SB1420204	16SB1430205	16SB1430205-D
SAMPLE DATE	20110824	20110824	20110824	20110824	20110824	20110824	20110824	20110824	20110825	20110825	20110825	20110825	20110826
ROUND													
EVENT													
SAMPLE CODE	NORMAL	NORMAL	ORIG	DUP	NORMAL	NORMAL	NORMAL	NORMAL	NORMAL	NORMAL	NORMAL	ORIG	DUP
MATRIX	SO	SO	SO	SO	SO	SO	SO	SO	SO	SO	SO	SO	SO
SAMPLE TYPE	NORMAL	NORMAL	NORMAL	NORMAL	NORMAL	NORMAL	NORMAL	NORMAL	NORMAL	NORMAL	NORMAL	NORMAL	NORMAL
SUBMATRIX	SB	SB	SB	SB	SB	SB	SB	SB	SB	SB	SB	SB	SB
TOP DEPTH	2	6	2	2	2	6	2	2	2	7	2	2	2
BOTTOM DEPTH	6	7	5	5	6	8	6	6	6	9	4	5	5
DIETHYL PHTHALATE													
DIMETHYL PHTHALATE													
DI-N-BUTYL PHTHALATE													
DI-N-OCTYL PHTHALATE													
DIPHENYLAMINE													
ETHYL METHANE SULFONATE													
FLUORANTHENE													
FLUORENE													
HEXACHLOROBENZENE													
HEXACHLOROBUTADIENE													
HEXACHLOROCYCLOPENTADIENE													
HEXACHLOROETHANE													
HEXACHLOROPROPENE													
INDENO(1,2,3-CD)PYRENE													
ISODRIN													
ISOPHORONE													
ISOSAFROLE													
KEPONE													
METHAPYRILENE													
METHYL METHANE SULFONATE													
NAPHTHALENE													
N-NITROSODIETHYLAMINE													
N-NITROSODIMETHYLAMINE													
N-NITROSO-DI-N-BUTYLAMINE													
N-NITROSO-DI-N-PROPYLAMINE													
N-NITROSOMETHYLETHYLAMINE													
N-NITROSOMORPHOLINE													
N-NITROSOPIPERIDINE													
N-NITROSOPYRROLIDINE													
O,O,O-TRIETHYL PHOSPHOROTHIOATE													
O-TOLUIDINE													
PENTACHLOROBENZENE													
PENTACHLOROETHANE													
PENTACHLORONITROBENZENE													
PHENACETIN													
PHENANTHRENE													
PHENOL													
PRONAMIDE													
PYRENE													
PYRIDINE													
SAFROLE													
SOLVENT YELLOW 2													
VOLATILES (UG/KG)													
1,1,1,2-TETRACHLOROETHANE													
1,1,1-TRICHLOROETHANE													
1,1,2,2-TETRACHLOROETHANE													
1,1,2-TRICHLOROETHANE	0.573 U	0.523 U	0.523 U	0.4947 U	0.514 J	0.374 J	0.308 U	0.517 U	0.536 U	0.33 U	0.578 U	0.582 U	0.5565 U
1,1,2-TRICHLOROTRIFLUOROETHANE													
1,1-DICHLOROETHANE													
1,1-DICHLOROETHENE													
1,2,3-TRICHLOROBENZENE													
1,2,3-TRICHLOROPROPANE													
1,2,4-TRICHLOROBENZENE													
1,2-DIBROMO-3-CHLOROPROPANE													
1,2-DIBROMOETHANE													
1,2-DICHLOROBENZENE													
1,2-DICHLOROETHANE													
1,2-DICHLOROPROPANE													
1,3-DICHLOROBENZENE													
1,4-DICHLOROBENZENE													
1,4-DIOXANE													
2-BUTANONE													
2-HEXANONE													
3-CHLOROPROPENE													
4-METHYL-2-PENTANONE													
ACETONE													
ACETONITRILE													

TABLE A-2

SUBSURFACE SOIL SAMPLE DATA
SWMU 16
NSA CRANE
CRANE, INDIANA

LOCATION	16SB136	16SB136	16SB137	16SB137	16SB138	16SB138	16SB139	16SB140	16SB141	16SB141	16SB142	16SB143	16SB143
SAMPLE ID	16SB1360206	16SB1360607	16SB1370205	16SB1370205-D	16SB1380206	16SB1380608	16SB1390206	16SB1400206	16SB1410206	16SB1410709	16SB1420204	16SB1430205	16SB1430205-D
SAMPLE DATE	20110824	20110824	20110824	20110824	20110824	20110824	20110824	20110824	20110825	20110825	20110825	20110825	20110826
ROUND													
EVENT													
SAMPLE CODE	NORMAL	NORMAL	ORIG	DUP	NORMAL	NORMAL	NORMAL	NORMAL	NORMAL	NORMAL	NORMAL	ORIG	DUP
MATRIX	SO	SO	SO	SO	SO	SO	SO	SO	SO	SO	SO	SO	SO
SAMPLE TYPE	NORMAL	NORMAL	NORMAL	NORMAL	NORMAL	NORMAL	NORMAL	NORMAL	NORMAL	NORMAL	NORMAL	NORMAL	NORMAL
SUBMATRIX	SB	SB	SB	SB	SB	SB	SB	SB	SB	SB	SB	SB	SB
TOP DEPTH	2	6	2	2	2	6	2	2	2	7	2	2	2
BOTTOM DEPTH	6	7	5	5	6	8	6	6	6	9	4	5	5
ACROLEIN													
ACRYLONITRILE													
BENZENE													
BROMODICHLOROMETHANE													
BROMOFORM													
BROMOMETHANE													
CARBON DISULFIDE													
CARBON TETRACHLORIDE													
CHLOROBENZENE													
CHLORODIBROMOMETHANE													
CHLOROETHANE													
CHLOROFORM													
CHLOROMETHANE													
CHLOROPRENE													
CIS-1,2-DICHLOROETHENE	0.573 U	0.523 U	0.523 U	0.4947 U	17.7	2.44	0.21 J	9.46	0.536 U	0.33 U	0.578 U	0.582 U	0.5565 U
CIS-1,3-DICHLOROPROPENE													
CYCLOHEXANE													
DIBROMOMETHANE													
DICHLORODIFLUOROMETHANE													
ETHYL METHACRYLATE													
ETHYLBENZENE													
ISOBUTANOL													
ISOPROPYLBENZENE													
METHACRYLONITRILE													
METHYL ACETATE													
METHYL IODIDE													
METHYL METHACRYLATE													
METHYL TERT-BUTYL ETHER													
METHYLENE CHLORIDE													
PROPIONITRILE													
STYRENE													
TETRACHLOROETHENE													
TOLUENE													
TOTAL XYLENES													
TRANS-1,2-DICHLOROETHENE	0.573 U	0.523 U	0.523 U	0.4947 U	18.9	1.52	0.308 U	0.517 U	0.536 U	0.33 U	0.578 U	0.582 U	0.5565 U
TRANS-1,3-DICHLOROPROPENE													
TRANS-1,4-DICHLORO-2-BUTENE													
TRICHLOROETHENE	3.28	3.28	0.576 UJ	7.4 J	1280	462	1.37	14.4	4.69	3.3	1.39	0.641 U	0.6124 U
TRICHLOROFLUOROMETHANE													
VINYL ACETATE													
VINYL CHLORIDE	0.573 U	0.523 U	0.523 U	0.4947 U	0.497 U	0.478 U	0.308 U	1.76	0.536 U	0.33 U	0.578 U	0.582 U	0.5565 U

TABLE A-2

SUBSURFACE SOIL SAMPLE DATA
SWMU 16
NSA CRANE
CRANE, INDIANA

LOCATION	16SB144	16SB145	16SB146	16SB146	16SB147	16SB148	16SB150	16SB151	16SB152	16SB153	16SB191	16SB191	16SB192
SAMPLE ID	16SB1440204	16SB1450203	16SB1460205	16SB1460205-D	16SB1470206	16SB1480206	16SB1500205	16SB1510204	16SB1520203	16SB1530206	16SB1910206	16SB1910608	16SB1920206
SAMPLE DATE	20110825	20110825	20110825	20110825	20110825	20110825	20110825	20110825	20110825	20110825	20110823	20110823	20110823
ROUND													
EVENT													
SAMPLE CODE	NORMAL	NORMAL	ORIG	DUP	NORMAL	NORMAL	NORMAL	NORMAL	NORMAL	NORMAL	NORMAL	NORMAL	NORMAL
MATRIX	SO	SO	SO	SO	SO	SO	SO	SO	SO	SO	SO	SO	SO
SAMPLE TYPE	NORMAL	NORMAL	NORMAL	NORMAL	NORMAL	NORMAL	NORMAL	NORMAL	NORMAL	NORMAL	NORMAL	NORMAL	NORMAL
SUBMATRIX	SB	SB	SB	SB	SB	SB	SB	SB	SB	SB	SB	SB	SB
TOP DEPTH	2	2	2	2	2	2	2	2	2	2	2	6	2
BOTTOM DEPTH	4	3	5	5	6	6	5	4	3	6	6	8	6
EXPLOSIVES (MG/KG)													
1,3,5-TRINITROBENZENE													
1,3-DINITROBENZENE													
2,4,6-TRINITROTOLUENE													
2,4-DINITROTOLUENE													
2,6-DINITROTOLUENE													
2-AMINO-4,6-DINITROTOLUENE													
2-NITROTOLUENE													
3-NITROTOLUENE													
4-AMINO-2,6-DINITROTOLUENE													
4-NITROTOLUENE													
HMX													
NITROBENZENE													
PICRAMIC ACID													
PICRIC ACID													
RDX													
TETRYL													
HERBICIDES (UG/KG)													
HEXACHLOROPHENE													
PENTACHLOROPHENOL													
METALS (MG/KG)													
ALUMINUM													
ANTIMONY													
ARSENIC													
BARIUM													
BERYLLIUM													
CADMIUM													
CALCIUM													
CHROMIUM													
COBALT													
COPPER													
IRON													
LEAD													
LITHIUM													
MAGNESIUM													
MANGANESE													
MERCURY													
NICKEL													
POTASSIUM													
SELENIUM													
SILVER													
SODIUM													
STRONTIUM													
THALLIUM													
TIN													
TITANIUM													
VANADIUM													
ZINC													
METALS (UG/KG)													
LEAD											20000	9800	14000
MISCELLANEOUS PARAMETERS (%)													
PERCENT MOISTURE											20	15	16
MISCELLANEOUS PARAMETERS (MEQ/100)													
CATION EXCHANGE CAPACITY													
MISCELLANEOUS PARAMETERS (MG/KG)													
TOTAL ORGANIC CARBON													
MISCELLANEOUS PARAMETERS (S.U.)													
PH													
PESTICIDES/PCBS (UG/KG)													
AROCLOR-1016													
AROCLOR-1221													
AROCLOR-1232													
AROCLOR-1242													
AROCLOR-1248													
AROCLOR-1254													
AROCLOR-1260													

TABLE A-2

SUBSURFACE SOIL SAMPLE DATA
SWMU 16
NSA CRANE
CRANE, INDIANA

LOCATION	16SB144	16SB145	16SB146	16SB146	16SB147	16SB148	16SB150	16SB151	16SB152	16SB153	16SB191	16SB191	16SB192
SAMPLE ID	16SB1440204	16SB1450203	16SB1460205	16SB1460205-D	16SB1470206	16SB1480206	16SB1500205	16SB1510204	16SB1520203	16SB1530206	16SB1910206	16SB1910608	16SB1920206
SAMPLE DATE	20110825	20110825	20110825	20110825	20110825	20110825	20110825	20110825	20110825	20110825	20110823	20110823	20110823
ROUND													
EVENT													
SAMPLE CODE	NORMAL	NORMAL	ORIG	DUP	NORMAL	NORMAL	NORMAL	NORMAL	NORMAL	NORMAL	NORMAL	NORMAL	NORMAL
MATRIX	SO	SO	SO	SO	SO	SO	SO	SO	SO	SO	SO	SO	SO
SAMPLE TYPE	NORMAL	NORMAL	NORMAL	NORMAL	NORMAL	NORMAL	NORMAL	NORMAL	NORMAL	NORMAL	NORMAL	NORMAL	NORMAL
SUBMATRIX	SB	SB	SB	SB	SB	SB	SB	SB	SB	SB	SB	SB	SB
TOP DEPTH	2	2	2	2	2	2	2	2	2	2	2	6	2
BOTTOM DEPTH	4	3	5	5	6	6	5	4	3	6	6	8	6
PETROLEUM HYDROCARBONS (UG/KG)													
DRO (C08-C28)											8300	2100 J	5700
TPH (C06-C12)											1200 UJ	1200 UJ	1200 UJ
SEMIVOLATILES (UG/KG)													
1,2,4,5-TETRACHLOROBENZENE													
1,2,4-TRICHLOROBENZENE													
1,2-DICHLOROBENZENE													
1,3-DICHLOROBENZENE													
1,4-DICHLOROBENZENE													
1,4-NAPHTHOQUINONE													
1,4-PHENYLENEDIAMINE													
1-NAPHTHYLAMINE													
2,2'-OXYBIS(1-CHLOROPROPANE)													
2,3,4,6-TETRACHLOROPHENOL													
2,4,5-TRICHLOROPHENOL													
2,4,6-TRICHLOROPHENOL													
2,4-DICHLOROPHENOL													
2,4-DIMETHYLPHENOL													
2,4-DINITROPHENOL													
2,6-DICHLOROPHENOL													
2-ACETYLAMINOFLUORENE													
2-CHLORONAPHTHALENE													
2-CHLOROPHENOL													
2-METHYLNAPHTHALENE													
2-METHYLPHENOL													
2-NAPHTHYLAMINE													
2-NITROANILINE													
2-NITROPHENOL													
2-PICOLINE													
3&4-METHYLPHENOL													
3,3'-DICHLOROBENZIDINE													
3,3'-DIMETHYLBENZIDINE													
3-METHYLCHOLANTHRENE													
3-NITROANILINE													
4,6-DINITRO-2-METHYLPHENOL													
4-AMINOBIPHENYL													
4-BROMOPHENYL PHENYL ETHER													
4-CHLORO-3-METHYLPHENOL													
4-CHLOROANILINE													
4-CHLOROPHENYL PHENYL ETHER													
4-NITROANILINE													
4-NITROPHENOL													
4-NITROQUINOLINE-1-OXIDE													
5-NITRO-O-TOLUIDINE													
7,12-DIMETHYLBENZ(A)ANTHRACENE													
A,A-DIMETHYLPHENETHYLAMINE													
ACENAPHTHENE													
ACENAPHTHYLENE													
ACETOPHENONE													
ANILINE													
ANTHRACENE													
ARAMITE													
BENZO(A)ANTHRACENE													
BENZO(A)PYRENE													
BENZO(B)FLUORANTHENE													
BENZO(G,H,I)PERYLENE													
BENZO(K)FLUORANTHENE													
BENZYL ALCOHOL													
BIS(2-CHLOROETHOXY)METHANE													
BIS(2-CHLOROETHYL)ETHER													
BIS(2-ETHYLHEXYL)PHTHALATE													
BUTYL BENZYL PHTHALATE													
CHLOROBENZILATE													
CHRYSENE													
DIALLATE													
DIBENZO(A,H)ANTHRACENE													
DIBENZOFURAN													

TABLE A-2

SUBSURFACE SOIL SAMPLE DATA
SWMU 16
NSA CRANE
CRANE, INDIANA

LOCATION	16SB144	16SB145	16SB146	16SB146	16SB147	16SB148	16SB150	16SB151	16SB152	16SB153	16SB191	16SB191	16SB192
SAMPLE ID	16SB1440204	16SB1450203	16SB1460205	16SB1460205-D	16SB1470206	16SB1480206	16SB1500205	16SB1510204	16SB1520203	16SB1530206	16SB1910206	16SB1910608	16SB1920206
SAMPLE DATE	20110825	20110825	20110825	20110825	20110825	20110825	20110825	20110825	20110825	20110825	20110823	20110823	20110823
ROUND													
EVENT													
SAMPLE CODE	NORMAL	NORMAL	ORIG	DUP	NORMAL	NORMAL	NORMAL	NORMAL	NORMAL	NORMAL	NORMAL	NORMAL	NORMAL
MATRIX	SO	SO	SO	SO	SO	SO	SO	SO	SO	SO	SO	SO	SO
SAMPLE TYPE	NORMAL	NORMAL	NORMAL	NORMAL	NORMAL	NORMAL	NORMAL	NORMAL	NORMAL	NORMAL	NORMAL	NORMAL	NORMAL
SUBMATRIX	SB	SB	SB	SB	SB	SB	SB	SB	SB	SB	SB	SB	SB
TOP DEPTH	2	2	2	2	2	2	2	2	2	2	2	6	2
BOTTOM DEPTH	4	3	5	5	6	6	5	4	3	6	6	8	6
DIETHYL PHTHALATE													
DIMETHYL PHTHALATE													
DI-N-BUTYL PHTHALATE													
DI-N-OCTYL PHTHALATE													
DIPHENYLAMINE													
ETHYL METHANE SULFONATE													
FLUORANTHENE													
FLUORENE													
HEXACHLOROBENZENE													
HEXACHLOROBUTADIENE													
HEXACHLOROCYCLOPENTADIENE													
HEXACHLOROETHANE													
HEXACHLOROPROPENE													
INDENO(1,2,3-CD)PYRENE													
ISODRIN													
ISOPHORONE													
ISOSAFROLE													
KEPONE													
METHAPYRILENE													
METHYL METHANE SULFONATE													
NAPHTHALENE													
N-NITROSODIETHYLAMINE													
N-NITROSODIMETHYLAMINE													
N-NITROSO-DI-N-BUTYLAMINE													
N-NITROSO-DI-N-PROPYLAMINE													
N-NITROSOMETHYLETHYLAMINE													
N-NITROSOMORPHOLINE													
N-NITROSOPIPERIDINE													
N-NITROSOPYRROLIDINE													
O,O,O-TRIETHYL PHOSPHOROTHIOATE													
O-TOLUIDINE													
PENTACHLOROBENZENE													
PENTACHLOROETHANE													
PENTACHLORONITROBENZENE													
PHENACETIN													
PHENANTHRENE													
PHENOL													
PRONAMIDE													
PYRENE													
PYRIDINE													
SAFROLE													
SOLVENT YELLOW 2													
VOLATILES (UG/KG)													
1,1,1,2-TETRACHLOROETHANE											0.306 U	0.276 U	0.539 U
1,1,1-TRICHLOROETHANE											0.306 U	0.276 U	0.539 U
1,1,2,2-TETRACHLOROETHANE											0.306 U	0.276 U	0.539 U
1,1,2-TRICHLOROETHANE	0.514 U	0.533 U	0.488 U	0.5164 U	0.581 U	0.592 U	0.518 U	0.537 U	0.569 U	0.518 U	0.306 U	0.276 U	0.539 U
1,1,2-TRICHLOROTRIFLUOROETHANE											1.63 U	1.47 U	2.88 U
1,1-DICHLOROETHANE											0.306 U	0.276 U	0.539 U
1,1-DICHLOROETHENE											0.306 U	0.276 U	0.539 U
1,2,3-TRICHLOROBENZENE											0.306 U	0.276 U	0.539 U
1,2,3-TRICHLOROPROPANE													
1,2,4-TRICHLOROBENZENE											0.306 U	0.276 U	0.539 U
1,2-DIBROMO-3-CHLOROPROPANE											0.306 U	0.276 U	0.539 U
1,2-DIBROMOETHANE											0.306 U	0.276 U	0.539 U
1,2-DICHLOROBENZENE											0.306 U	0.276 U	0.539 U
1,2-DICHLOROETHANE											0.306 U	0.276 U	0.539 U
1,2-DICHLOROPROPANE											0.306 U	0.276 U	0.539 U
1,3-DICHLOROBENZENE											0.306 U	0.276 U	0.539 U
1,4-DICHLOROBENZENE											0.306 U	0.276 U	0.539 U
1,4-DIOXANE													
2-BUTANONE											2.12 J	1.38 U	5.52
2-HEXANONE											1.53 U	1.38 U	2.7 U
3-CHLOROPROPENE													
4-METHYL-2-PENTANONE											1.27 U	1.15 U	2.25 U
ACETONE											9.63	2.27 J	41.5
ACETONITRILE													

TABLE A-2

SUBSURFACE SOIL SAMPLE DATA
SWMU 16
NSA CRANE
CRANE, INDIANA

LOCATION	16SB144	16SB145	16SB146	16SB146	16SB147	16SB148	16SB150	16SB151	16SB152	16SB153	16SB191	16SB191	16SB192
SAMPLE ID	16SB1440204	16SB1450203	16SB1460205	16SB1460205-D	16SB1470206	16SB1480206	16SB1500205	16SB1510204	16SB1520203	16SB1530206	16SB1910206	16SB1910608	16SB1920206
SAMPLE DATE	20110825	20110825	20110825	20110825	20110825	20110825	20110825	20110825	20110825	20110825	20110823	20110823	20110823
ROUND													
EVENT													
SAMPLE CODE	NORMAL	NORMAL	ORIG	DUP	NORMAL	NORMAL	NORMAL	NORMAL	NORMAL	NORMAL	NORMAL	NORMAL	NORMAL
MATRIX	SO	SO	SO	SO	SO	SO	SO	SO	SO	SO	SO	SO	SO
SAMPLE TYPE	NORMAL	NORMAL	NORMAL	NORMAL	NORMAL	NORMAL	NORMAL	NORMAL	NORMAL	NORMAL	NORMAL	NORMAL	NORMAL
SUBMATRIX	SB	SB	SB	SB	SB	SB	SB	SB	SB	SB	SB	SB	SB
TOP DEPTH	2	2	2	2	2	2	2	2	2	2	2	6	2
BOTTOM DEPTH	4	3	5	5	6	6	5	4	3	6	6	8	6
ACROLEIN											1.58 U	1.42 U	2.79 U
ACRYLONITRILE													
BENZENE											0.285 J	0.276 U	0.539 U
BROMODICHLOROMETHANE											0.306 U	0.276 U	0.539 U
BROMOFORM											0.306 U	0.276 U	0.539 U
BROMOMETHANE											0.306 U	0.276 U	0.539 U
CARBON DISULFIDE											1.27 U	1.15 U	2.25 U
CARBON TETRACHLORIDE											0.306 U	0.276 U	0.539 U
CHLOROBENZENE											0.306 U	0.276 U	0.539 U
CHLORODIBROMOMETHANE											0.306 U	0.276 U	0.539 U
CHLOROETHANE											0.306 U	0.276 U	0.539 U
CHLOROFORM											0.306 U	0.276 U	0.539 U
CHLOROMETHANE											0.306 U	0.276 U	0.539 U
CHLOROPRENE													
CIS-1,2-DICHLOROETHENE	0.514 U	0.533 U	0.488 U	0.5164 U	0.494 J	0.592 U	0.518 U	0.295 J	0.569 U	0.518 U	0.306 U	0.276 U	0.539 U
CIS-1,3-DICHLOROPROPENE											0.306 U	0.276 U	0.539 U
CYCLOHEXANE											0.235 J	0.276 U	0.539 U
DIBROMOMETHANE													
DICHLORODIFLUOROMETHANE											0.347 U	0.313 U	0.611 U
ETHYL METHACRYLATE													
ETHYLBENZENE											0.556	0.276 U	0.539 U
ISOBUTANOL													
ISOPROPYLBENZENE											0.382 J	0.276 U	0.539 U
METHACRYLONITRILE													
METHYL ACETATE											2 J	1.53 U	3.15 J
METHYL IODIDE													
METHYL METHACRYLATE													
METHYL TERT-BUTYL ETHER											0.306 U	0.276 U	0.539 U
METHYLENE CHLORIDE											2.04 U	1.84 U	3.59 U
PROPIONITRILE													
STYRENE											0.306 U	0.276 U	0.539 U
TETRACHLOROETHENE											0.306 U	0.276 U	0.539 U
TOLUENE											0.831	0.276 U	0.539 U
TOTAL XYLENES											2.88	0.276 U	0.539 U
TRANS-1,2-DICHLOROETHENE	0.514 U	0.533 U	0.488 U	0.5164 U	0.581 U	0.592 U	0.518 U	0.537 U	0.569 U	0.518 U	0.306 U	0.276 U	0.539 U
TRANS-1,3-DICHLOROPROPENE											0.306 U	0.276 U	0.539 U
TRANS-1,4-DICHLORO-2-BUTENE													
TRICHLOROETHENE	0.566 U	0.587 U	51.4	68.5	12.3 J	2.66	329	220	173	236	0.336 U	0.303 U	0.593 U
TRICHLOROFLUOROMETHANE											0.306 U	0.276 U	0.539 U
VINYL ACETATE											1.27 U	1.15 U	2.25 U
VINYL CHLORIDE	0.514 U	0.533 U	0.488 U	0.5164 U	0.581 U	0.592 U	0.518 U	0.537 U	0.569 U	0.518 U	0.306 U	0.276 U	0.539 U

TABLE A-2

SUBSURFACE SOIL SAMPLE DATA
SWMU 16
NSA CRANE
CRANE, INDIANA

LOCATION	16SB192	16SB193	16SB193	16SB194	16SB194	16SB195	16SB195	16SB196	16SB196	16SB196	16SB197	16SB197	16SB198
SAMPLE ID	16SB1920709	16SB1930206	16SB1930608	16SB1940206	16SB1940810	16SB1950206	16SB1950709	16SB1960206	16SB1960206-D	16SB1961012	16SB1970206	16SB1970607	16SB1980206
SAMPLE DATE	20110823	20110823	20110823	20110823	20110823	20110823	20110823	20110823	20110823	20110823	20110823	20110823	20110823
ROUND													
EVENT													
SAMPLE CODE	NORMAL	NORMAL	NORMAL	NORMAL	NORMAL	NORMAL	NORMAL	ORIG	DUP	NORMAL	NORMAL	NORMAL	NORMAL
MATRIX	SO	SO	SO	SO	SO	SO	SO	SO	SO	SO	SO	SO	SO
SAMPLE TYPE	NORMAL	NORMAL	NORMAL	NORMAL	NORMAL	NORMAL	NORMAL	NORMAL	NORMAL	NORMAL	NORMAL	NORMAL	NORMAL
SUBMATRIX	SB	SB	SB	SB	SB	SB	SB	SB	SB	SB	SB	SB	SB
TOP DEPTH	7	2	6	2	8	2	7	2	2	10	2	6	2
BOTTOM DEPTH	9	6	8	6	10	6	9	6	6	12	6	7	6
EXPLOSIVES (MG/KG)													
1,3,5-TRINITROBENZENE													
1,3-DINITROBENZENE													
2,4,6-TRINITROTOLUENE													
2,4-DINITROTOLUENE													
2,6-DINITROTOLUENE													
2-AMINO-4,6-DINITROTOLUENE													
2-NITROTOLUENE													
3-NITROTOLUENE													
4-AMINO-2,6-DINITROTOLUENE													
4-NITROTOLUENE													
HMX													
NITROBENZENE													
PICRAMIC ACID													
PICRIC ACID													
RDX													
TETRYL													
HERBICIDES (UG/KG)													
HEXACHLOROPHENE													
PENTACHLOROPHENOL													
METALS (MG/KG)													
ALUMINUM													
ANTIMONY													
ARSENIC													
BARIUM													
BERYLLIUM													
CADMIUM													
CALCIUM													
CHROMIUM													
COBALT													
COPPER													
IRON													
LEAD													
LITHIUM													
MAGNESIUM													
MANGANESE													
MERCURY													
NICKEL													
POTASSIUM													
SELENIUM													
SILVER													
SODIUM													
STRONTIUM													
THALLIUM													
TIN													
TITANIUM													
VANADIUM													
ZINC													
METALS (UG/KG)													
LEAD	12000	13000	10000	15000	13000	15000	13000	22000	22000	9500	17000	11000	18000
MISCELLANEOUS PARAMETERS (%)													
PERCENT MOISTURE	18	19	15	23	18	16	18	16	10	15	19	18	19
MISCELLANEOUS PARAMETERS (MEQ/100)													
CATION EXCHANGE CAPACITY													
MISCELLANEOUS PARAMETERS (MG/KG)													
TOTAL ORGANIC CARBON													
MISCELLANEOUS PARAMETERS (S.U.)													
PH													
PESTICIDES/PCBS (UG/KG)													
AROCLOR-1016													
AROCLOR-1221													
AROCLOR-1232													
AROCLOR-1242													
AROCLOR-1248													
AROCLOR-1254													
AROCLOR-1260													

TABLE A-2

SUBSURFACE SOIL SAMPLE DATA
SWMU 16
NSA CRANE
CRANE, INDIANA

LOCATION	16SB192	16SB193	16SB193	16SB194	16SB194	16SB195	16SB195	16SB196	16SB196	16SB196	16SB197	16SB197	16SB198
SAMPLE ID	16SB1920709	16SB1930206	16SB1930608	16SB1940206	16SB1940810	16SB1950206	16SB1950709	16SB1960206	16SB1960206-D	16SB1961012	16SB1970206	16SB1970607	16SB1980206
SAMPLE DATE	20110823	20110823	20110823	20110823	20110823	20110823	20110823	20110823	20110823	20110823	20110823	20110823	20110823
ROUND													
EVENT													
SAMPLE CODE	NORMAL	NORMAL	NORMAL	NORMAL	NORMAL	NORMAL	NORMAL	ORIG	DUP	NORMAL	NORMAL	NORMAL	NORMAL
MATRIX	SO	SO	SO	SO	SO	SO	SO	SO	SO	SO	SO	SO	SO
SAMPLE TYPE	NORMAL	NORMAL	NORMAL	NORMAL	NORMAL	NORMAL	NORMAL	NORMAL	NORMAL	NORMAL	NORMAL	NORMAL	NORMAL
SUBMATRIX	SB	SB	SB	SB	SB	SB	SB	SB	SB	SB	SB	SB	SB
TOP DEPTH	7	2	6	2	8	2	7	2	2	10	2	6	2
BOTTOM DEPTH	9	6	8	6	10	6	9	6	6	12	6	7	6
PETROLEUM HYDROCARBONS (UG/KG)													
DRO (C08-C28)	3000 J	3200 J	3000 J	4500	2500 J	5800	3700	3200 J	750 J	2700 J	3000 J	950 J	1100 J
TPH (C06-C12)	1200 UJ	1200 UJ	1200 UJ	1300 UJ	1200 UJ	19000 J	1200 UR	1200 UJ	1200 UR	1200 UJ	1200 UJ	1200 UJ	1200 UJ
SEMIVOLATILES (UG/KG)													
1,2,4,5-TETRACHLOROBENZENE													
1,2,4-TRICHLOROBENZENE													
1,2-DICHLOROBENZENE													
1,3-DICHLOROBENZENE													
1,4-DICHLOROBENZENE													
1,4-NAPHTHOQUINONE													
1,4-PHENYLENEDIAMINE													
1-NAPHTHYLAMINE													
2,2'-OXYBIS(1-CHLOROPROPANE)													
2,3,4,6-TETRACHLOROPHENOL													
2,4,5-TRICHLOROPHENOL													
2,4,6-TRICHLOROPHENOL													
2,4-DICHLOROPHENOL													
2,4-DIMETHYLPHENOL													
2,4-DINITROPHENOL													
2,6-DICHLOROPHENOL													
2-ACETYLAMINOFLUORENE													
2-CHLORONAPHTHALENE													
2-CHLOROPHENOL													
2-METHYLNAPHTHALENE													
2-METHYLPHENOL													
2-NAPHTHYLAMINE													
2-NITROANILINE													
2-NITROPHENOL													
2-PICOLINE													
3&4-METHYLPHENOL													
3,3'-DICHLOROBENZIDINE													
3,3'-DIMETHYLBENZIDINE													
3-METHYLCHOLANTHRENE													
3-NITROANILINE													
4,6-DINITRO-2-METHYLPHENOL													
4-AMINOBIPHENYL													
4-BROMOPHENYL PHENYL ETHER													
4-CHLORO-3-METHYLPHENOL													
4-CHLOROANILINE													
4-CHLOROPHENYL PHENYL ETHER													
4-NITROANILINE													
4-NITROPHENOL													
4-NITROQUINOLINE-1-OXIDE													
5-NITRO-O-TOLUIDINE													
7,12-DIMETHYLBENZ(A)ANTHRACENE													
A,A-DIMETHYLPHENETHYLAMINE													
ACENAPHTHENE													
ACENAPHTHYLENE													
ACETOPHENONE													
ANILINE													
ANTHRACENE													
ARAMITE													
BENZO(A)ANTHRACENE													
BENZO(A)PYRENE													
BENZO(B)FLUORANTHENE													
BENZO(G,H,I)PERYLENE													
BENZO(K)FLUORANTHENE													
BENZYL ALCOHOL													
BIS(2-CHLOROETHOXY)METHANE													
BIS(2-CHLOROETHYL)ETHER													
BIS(2-ETHYLHEXYL)PHTHALATE													
BUTYL BENZYL PHTHALATE													
CHLOROBENZILATE													
CHRYSENE													
DIALLATE													
DIBENZO(A,H)ANTHRACENE													
DIBENZOFURAN													

TABLE A-2

SUBSURFACE SOIL SAMPLE DATA
SWMU 16
NSA CRANE
CRANE, INDIANA

LOCATION	16SB192	16SB193	16SB193	16SB194	16SB194	16SB195	16SB195	16SB196	16SB196	16SB196	16SB197	16SB197	16SB198
SAMPLE ID	16SB1920709	16SB1930206	16SB1930608	16SB1940206	16SB1940810	16SB1950206	16SB1950709	16SB1960206	16SB1960206-D	16SB1961012	16SB1970206	16SB1970607	16SB1980206
SAMPLE DATE	20110823	20110823	20110823	20110823	20110823	20110823	20110823	20110823	20110823	20110823	20110823	20110823	20110823
ROUND													
EVENT													
SAMPLE CODE	NORMAL	NORMAL	NORMAL	NORMAL	NORMAL	NORMAL	NORMAL	ORIG	DUP	NORMAL	NORMAL	NORMAL	NORMAL
MATRIX	SO	SO	SO	SO	SO	SO	SO	SO	SO	SO	SO	SO	SO
SAMPLE TYPE	NORMAL	NORMAL	NORMAL	NORMAL	NORMAL	NORMAL	NORMAL	NORMAL	NORMAL	NORMAL	NORMAL	NORMAL	NORMAL
SUBMATRIX	SB	SB	SB	SB	SB	SB	SB	SB	SB	SB	SB	SB	SB
TOP DEPTH	7	2	6	2	8	2	7	2	2	10	2	6	2
BOTTOM DEPTH	9	6	8	6	10	6	9	6	6	12	6	7	6
DIETHYL PHTHALATE													
DIMETHYL PHTHALATE													
DI-N-BUTYL PHTHALATE													
DI-N-OCTYL PHTHALATE													
DIPHENYLAMINE													
ETHYL METHANE SULFONATE													
FLUORANTHENE													
FLUORENE													
HEXACHLOROBENZENE													
HEXACHLOROBUTADIENE													
HEXACHLOROCYCLOPENTADIENE													
HEXACHLOROETHANE													
HEXACHLOROPROPENE													
INDENO(1,2,3-CD)PYRENE													
ISODRIN													
ISOPHORONE													
ISOSAFROLE													
KEPONE													
METHAPYRILENE													
METHYL METHANE SULFONATE													
NAPHTHALENE													
N-NITROSODIETHYLAMINE													
N-NITROSODIMETHYLAMINE													
N-NITROSO-DI-N-BUTYLAMINE													
N-NITROSO-DI-N-PROPYLAMINE													
N-NITROSOMETHYLETHYLAMINE													
N-NITROSOMORPHOLINE													
N-NITROSOPIPERIDINE													
N-NITROSOPYRROLIDINE													
O,O,O-TRIETHYL PHOSPHOROTHIOATE													
O-TOLUIDINE													
PENTACHLOROBENZENE													
PENTACHLOROETHANE													
PENTACHLORONITROBENZENE													
PHENACETIN													
PHENANTHRENE													
PHENOL													
PRONAMIDE													
PYRENE													
PYRIDINE													
SAFROLE													
SOLVENT YELLOW 2													
VOLATILES (UG/KG)													
1,1,1,2-TETRACHLOROETHANE	0.292 U	0.332 U	0.494 U	0.319 U	0.298 U	0.526 U	0.449 U	0.325 U	0.306 U	0.291 U	0.524 U	0.546 U	0.538 U
1,1,1-TRICHLOROETHANE	0.292 U	0.332 U	0.494 U	0.319 U	0.298 U	0.526 U	0.449 U	0.325 U	0.306 U	0.291 U	0.524 UJ	0.546 U	0.538 U
1,1,2,2-TETRACHLOROETHANE	0.292 U	0.332 U	0.494 U	0.319 U	0.298 U	0.526 U	0.449 U	0.325 U	0.306 U	0.291 U	0.524 U	0.546 U	0.538 U
1,1,2-TRICHLOROETHANE	0.292 U	0.332 U	0.494 U	0.319 U	0.298 U	0.526 U	0.449 U	0.325 U	0.306 U	0.291 U	0.524 U	0.546 U	0.538 U
1,1,2-TRICHLOROTRIFLUOROETHANE	1.56 U	1.77 U	2.64 U	1.7 U	1.59 U	2.8 U	2.4 U	1.73 U	1.63 U	1.55 U	2.8 U	2.91 U	2.87 U
1,1-DICHLOROETHANE	0.292 U	0.332 U	0.494 U	0.319 U	0.298 U	0.526 U	0.449 U	0.325 U	0.306 U	0.291 U	0.524 UJ	0.546 U	0.538 U
1,1-DICHLOROETHENE	0.292 U	0.332 U	0.494 U	0.319 U	0.298 U	0.526 U	0.449 U	0.325 U	0.306 U	0.291 U	0.524 UJ	0.546 U	0.538 U
1,2,3-TRICHLOROBENZENE	0.292 U	0.332 U	0.494 U	0.319 U	0.298 U	0.526 U	0.449 U	0.325 U	0.306 U	0.291 U	0.524 UJ	0.546 U	0.538 U
1,2,3-TRICHLOROPROPANE													
1,2,4-TRICHLOROBENZENE	0.292 U	0.332 U	0.494 U	0.319 U	0.298 U	0.526 U	0.449 U	0.325 U	0.306 U	0.291 U	0.524 UJ	0.546 U	0.538 U
1,2-DIBROMO-3-CHLOROPROPANE	0.292 U	0.332 U	0.494 U	0.319 U	0.298 U	0.526 U	0.449 U	0.325 U	0.306 U	0.291 U	0.524 U	0.546 U	0.538 U
1,2-DIBROMOETHANE	0.292 U	0.332 U	0.494 U	0.319 U	0.298 U	0.526 U	0.449 U	0.325 U	0.306 U	0.291 U	0.524 U	0.546 U	0.538 U
1,2-DICHLOROBENZENE	0.292 U	0.332 U	0.494 U	0.319 U	0.298 U	0.526 U	0.449 U	0.325 U	0.306 U	0.291 U	0.524 UJ	0.546 U	0.538 U
1,2-DICHLOROETHANE	0.292 U	0.332 U	0.494 U	0.319 U	0.298 U	0.526 U	0.449 U	0.325 U	0.306 U	0.291 U	0.524 U	0.546 U	0.538 U
1,2-DICHLOROPROPANE	0.292 U	0.332 U	0.494 U	0.319 U	0.298 U	0.526 U	0.449 U	0.325 U	0.306 U	0.291 U	0.524 U	0.546 U	0.538 U
1,3-DICHLOROBENZENE	0.292 U	0.332 U	0.494 U	0.319 U	0.298 U	0.526 U	0.449 U	0.325 U	0.306 U	0.291 U	0.524 UJ	0.546 U	0.538 U
1,4-DICHLOROBENZENE	0.292 U	0.332 U	0.494 U	0.319 U	0.298 U	0.526 U	0.449 U	0.325 U	0.306 U	0.291 U	0.524 UJ	0.546 U	0.538 U
1,4-DIOXANE													
2-BUTANONE	1.75 J	1.67 J	1.39 J	1.14 J	2.89	6.55	1.44 J	1.63 U	2.77	0.758 J	4.95	2.73 U	6.45
2-HEXANONE	1.46 U	1.66 U	2.47 U	1.6 U	1.49 U	2.63 U	2.25 U	1.63 U	1.53 U	1.46 U	2.62 U	2.73 U	2.69 U
3-CHLOROPROPENE													
4-METHYL-2-PENTANONE	1.22 U	1.38 U	2.06 U	1.33 U	1.24 U	2.19 U	1.87 U	1.36 U	1.27 U	1.21 U	2.18 U	2.27 U	2.24 U
ACETONE	12.3	6.86	9.44	7.91	18.2	27.3	10.3	2.57 J	18.8 J	6.4	26.1	7.76	72.8
ACETONITRILE													

TABLE A-2

SUBSURFACE SOIL SAMPLE DATA
SWMU 16
NSA CRANE
CRANE, INDIANA

LOCATION	16SB192	16SB193	16SB193	16SB194	16SB194	16SB195	16SB195	16SB196	16SB196	16SB196	16SB197	16SB197	16SB198
SAMPLE ID	16SB1920709	16SB1930206	16SB1930608	16SB1940206	16SB1940810	16SB1950206	16SB1950709	16SB1960206	16SB1960206-D	16SB1961012	16SB1970206	16SB1970607	16SB1980206
SAMPLE DATE	20110823	20110823	20110823	20110823	20110823	20110823	20110823	20110823	20110823	20110823	20110823	20110823	20110823
ROUND													
EVENT													
SAMPLE CODE	NORMAL	NORMAL	NORMAL	NORMAL	NORMAL	NORMAL	NORMAL	ORIG	DUP	NORMAL	NORMAL	NORMAL	NORMAL
MATRIX	SO	SO	SO	SO	SO	SO	SO	SO	SO	SO	SO	SO	SO
SAMPLE TYPE	NORMAL	NORMAL	NORMAL	NORMAL	NORMAL	NORMAL	NORMAL	NORMAL	NORMAL	NORMAL	NORMAL	NORMAL	NORMAL
SUBMATRIX	SB	SB	SB	SB	SB	SB	SB	SB	SB	SB	SB	SB	SB
TOP DEPTH	7	2	6	2	8	2	7	2	2	10	2	6	2
BOTTOM DEPTH	9	6	8	6	10	6	9	6	6	12	6	7	6
ACROLEIN	1.51 U	1.71 U	2.55 U	1.65 U	1.54 U	2.72 U	2.32 U	1.68 U	1.58 U	1.51 U	2.71 UJ	2.82 U	2.78 U
ACRYLONITRILE													
BENZENE	0.292 U	0.332 U	0.494 U	0.319 U	0.298 U	1.8	0.449 U	0.325 U	0.306 U	0.291 U	0.524 UJ	0.546 U	0.538 U
BROMODICHLOROMETHANE	0.292 U	0.332 U	0.494 U	0.319 U	0.298 U	0.526 U	0.449 U	0.325 U	0.306 U	0.291 U	0.524 U	0.546 U	0.538 U
BROMOFORM	0.292 U	0.332 U	0.494 U	0.319 U	0.298 U	0.526 U	0.449 U	0.325 U	0.306 U	0.291 U	0.524 U	0.546 U	0.538 U
BROMOMETHANE	0.292 U	0.332 U	0.494 U	0.319 U	0.298 U	0.526 U	0.449 U	0.325 U	0.306 U	0.291 U	0.524 U	0.546 U	0.538 U
CARBON DISULFIDE	1.22 U	1.38 U	2.06 U	1.04 J	1.24 U	2.19 U	1.87 U	1.36 U	1.27 U	0.656 J	2.18 U	2.27 U	2.24 U
CARBON TETRACHLORIDE	0.292 U	0.332 U	0.494 U	0.319 U	0.298 U	0.526 U	0.449 U	0.325 U	0.306 U	0.291 U	0.524 UJ	0.546 U	0.538 U
CHLOROBENZENE	0.292 U	0.332 U	0.494 U	0.319 U	0.298 U	0.526 U	0.449 U	0.325 U	0.306 U	0.291 U	0.524 UJ	0.546 U	0.538 U
CHLORODIBROMOMETHANE	0.292 U	0.332 U	0.494 U	0.319 U	0.298 U	0.526 U	0.449 U	0.325 U	0.306 U	0.291 U	0.524 U	0.546 U	0.538 U
CHLOROETHANE	0.292 U	0.332 U	0.494 U	0.319 U	0.298 U	0.526 U	0.449 U	0.325 U	0.306 U	0.291 U	0.524 U	0.546 U	0.538 U
CHLOROFORM	0.292 U	0.332 U	0.494 U	0.319 U	0.298 U	0.526 U	0.449 U	0.325 U	0.306 U	0.291 U	0.524 U	0.546 U	0.538 U
CHLOROMETHANE	0.292 U	0.332 U	0.494 U	0.319 U	0.298 U	0.526 U	0.449 U	0.325 U	0.306 U	0.291 U	0.524 U	0.546 U	0.538 U
CHLOROPRENE													
CIS-1,2-DICHLOROETHENE	0.292 U	0.68	0.536 J	0.319 U	0.432 J	0.526 U	0.449 U	0.325 U	0.306 U	0.291 U	0.524 U	0.546 U	0.538 U
CIS-1,3-DICHLOROPROPENE	0.292 U	0.332 U	0.494 U	0.319 U	0.298 U	0.526 U	0.449 U	0.325 U	0.306 U	0.291 U	0.524 U	0.546 U	0.538 U
CYCLOHEXANE	0.292 U	0.332 U	0.494 U	0.319 U	0.298 U	0.526 U	0.449 U	0.325 U	0.306 U	0.291 U	0.524 U	0.546 U	0.538 U
DIBROMOMETHANE													
DICHLORODIFLUOROMETHANE	0.331 U	0.376 U	0.56 U	0.362 U	0.338 U	0.596 U	0.509 U	0.369 U	0.346 U	0.33 U	0.594 U	0.618 U	0.609 U
ETHYL METHACRYLATE													
ETHYLBENZENE	0.292 U	0.332 U	0.494 U	0.319 U	0.298 U	14.4	0.449 U	0.325 U	0.306 U	0.291 U	0.524 UJ	0.546 U	0.538 U
ISOBUTANOL													
ISOPROPYLBENZENE	0.292 U	0.332 U	0.494 U	0.319 U	0.298 U	15.4	0.449 U	0.325 U	0.306 U	0.291 U	0.524 U	0.546 U	0.538 U
METHACRYLONITRILE													
METHYL ACETATE	1.62 U	1.84 U	2.74 U	1.77 U	1.65 U	2.91 U	2.49 U	1.8 U	1.69 U	1.61 U	2.32 J	3.02 U	4.12 J
METHYL IODIDE													
METHYL METHACRYLATE													
METHYL TERT-BUTYL ETHER	0.292 U	0.332 U	0.494 U	0.319 U	0.298 U	0.526 U	0.449 U	0.325 U	0.306 U	0.291 U	0.524 U	0.546 U	0.538 U
METHYLENE CHLORIDE	1.95 U	2.21 U	3.3 U	2.13 U	1.99 U	3.5 U	3 U	2.17 U	2.04 U	1.94 U	3.49 U	3.64 U	3.58 U
PROPIONITRILE													
STYRENE	0.292 U	0.332 U	0.494 U	0.319 U	0.298 U	0.526 U	0.449 U	0.325 U	0.306 U	0.291 U	0.524 UJ	0.546 U	0.538 U
TETRACHLOROETHENE	0.292 U	0.332 U	0.494 U	0.319 U	0.298 U	0.526 U	0.449 U	0.325 U	0.306 U	0.291 U	0.524 U	0.546 U	0.538 U
TOLUENE	0.292 U	1.65	0.494 U	0.208 J	0.288 J	7.32	0.449 U	0.325 U	0.239 J	0.291 U	0.9 J	0.546 U	0.538 U
TOTAL XYLENES	0.292 U	0.332 U	0.494 U	0.319 U	0.298 U	89.7	0.449 U	0.325 U	0.306 U	0.291 U	0.524 U	0.546 U	0.538 U
TRANS-1,2-DICHLOROETHENE	0.292 U	0.332 U	0.494 U	0.319 U	0.298 U	0.526 U	0.449 U	0.325 U	0.306 U	0.291 U	0.524 UJ	0.546 U	0.538 U
TRANS-1,3-DICHLOROPROPENE	0.292 U	0.332 U	0.494 U	0.319 U	0.298 U	0.526 U	0.449 U	0.325 U	0.306 U	0.291 U	0.524 U	0.546 U	0.538 U
TRANS-1,4-DICHLORO-2-BUTENE													
TRICHLOROETHENE	0.322 U	0.365 U	0.544 U	0.351 U	0.328 U	0.578 U	0.494 U	0.358 U	0.336 U	0.321 U	0.577 UJ	0.6 U	0.592 U
TRICHLOROFLUOROMETHANE	0.292 U	0.332 U	0.494 U	0.319 U	0.298 U	0.526 U	0.449 U	0.325 U	0.306 U	0.291 U	0.524 U	0.546 U	0.538 U
VINYL ACETATE	1.22 U	1.38 U	2.06 U	1.33 U	1.24 U	2.19 U	1.87 U	1.36 U	1.27 U	1.21 U	2.18 U	2.27 U	2.24 U
VINYL CHLORIDE	0.292 U	1.56	1.29	0.319 U	0.298 U	0.526 U	0.449 U	0.325 U	0.306 U	0.291 U	2.37 J	2.24	0.538 U

TABLE A-2

SUBSURFACE SOIL SAMPLE DATA
SWMU 16
NSA CRANE
CRANE, INDIANA

LOCATION	16SB198	16SB199	16SB199	16SB200	16SB201	16SB202	16SB203	16SB204	16SB204	16SB205	16SB205	16SB206	16SB209
SAMPLE ID	16SB1980607	16SB1990406	16SB1990709	16SB2000204	16SB2010203	16SB2020204	16SB2030203	16SB2040206	16SB2040709	16SB2050206	16SB2050607	16SB2060204	16SB209-0203
SAMPLE DATE	20110823	20110824	20110824	20110825	20110825	20110825	20110825	20110825	20110825	20110825	20110825	20110825	20121006
ROUND													
EVENT													
SAMPLE CODE	NORMAL	NORMAL	NORMAL	NORMAL	NORMAL	NORMAL	NORMAL	NORMAL	NORMAL	NORMAL	NORMAL	NORMAL	NORMAL
MATRIX	SO	SO	SO	SO	SO	SO	SO	SO	SO	SO	SO	SO	SO
SAMPLE TYPE	NORMAL	NORMAL	NORMAL	NORMAL	NORMAL	NORMAL	NORMAL	NORMAL	NORMAL	NORMAL	NORMAL	NORMAL	NORMAL
SUBMATRIX	SB	SB	SB	SB	SB	SB	SB	SB	SB	SB	SB	SB	SB
TOP DEPTH	6	4	7	2	2	2	2	2	7	2	6	2	2
BOTTOM DEPTH	7	6	9	4	3	4	3	6	9	6	7	4	3
EXPLOSIVES (MG/KG)													
1,3,5-TRINITROBENZENE													
1,3-DINITROBENZENE													
2,4,6-TRINITROTOLUENE													
2,4-DINITROTOLUENE													
2,6-DINITROTOLUENE													
2-AMINO-4,6-DINITROTOLUENE													
2-NITROTOLUENE													
3-NITROTOLUENE													
4-AMINO-2,6-DINITROTOLUENE													
4-NITROTOLUENE													
HMX													
NITROBENZENE													
PICRAMIC ACID													
PICRIC ACID													
RDX													
TETRYL													
HERBICIDES (UG/KG)													
HEXACHLOROPHENE													
PENTACHLOROPHENOL													
METALS (MG/KG)													
ALUMINUM													
ANTIMONY													
ARSENIC													
BARIUM													
BERYLLIUM													
CADMIUM													
CALCIUM													
CHROMIUM													
COBALT													
COPPER													
IRON													
LEAD													
LITHIUM													
MAGNESIUM													
MANGANESE													
MERCURY													
NICKEL													
POTASSIUM													
SELENIUM													
SILVER													
SODIUM													
STRONTIUM													
THALLIUM													
TIN													
TITANIUM													
VANADIUM													
ZINC													
METALS (UG/KG)													
LEAD	12000												
MISCELLANEOUS PARAMETERS (%)													
PERCENT MOISTURE	15												
MISCELLANEOUS PARAMETERS (MEQ/100)													
CATION EXCHANGE CAPACITY													
MISCELLANEOUS PARAMETERS (MG/KG)													
TOTAL ORGANIC CARBON													
MISCELLANEOUS PARAMETERS (S.U.)													
PH													
PESTICIDES/PCBS (UG/KG)													
AROCLOR-1016													
AROCLOR-1221													
AROCLOR-1232													
AROCLOR-1242													
AROCLOR-1248													
AROCLOR-1254													
AROCLOR-1260													

TABLE A-2

SUBSURFACE SOIL SAMPLE DATA
SWMU 16
NSA CRANE
CRANE, INDIANA

LOCATION	16SB198	16SB199	16SB199	16SB200	16SB201	16SB202	16SB203	16SB204	16SB204	16SB205	16SB205	16SB206	16SB209
SAMPLE ID	16SB1980607	16SB1990406	16SB1990709	16SB2000204	16SB2010203	16SB2020204	16SB2030203	16SB2040206	16SB2040709	16SB2050206	16SB2050607	16SB2060204	16SB209-0203
SAMPLE DATE	20110823	20110824	20110824	20110825	20110825	20110825	20110825	20110825	20110825	20110825	20110825	20110825	20121006
ROUND													
EVENT													
SAMPLE CODE	NORMAL	NORMAL	NORMAL	NORMAL	NORMAL	NORMAL	NORMAL	NORMAL	NORMAL	NORMAL	NORMAL	NORMAL	NORMAL
MATRIX	SO	SO	SO	SO	SO	SO	SO	SO	SO	SO	SO	SO	SO
SAMPLE TYPE	NORMAL	NORMAL	NORMAL	NORMAL	NORMAL	NORMAL	NORMAL	NORMAL	NORMAL	NORMAL	NORMAL	NORMAL	NORMAL
SUBMATRIX	SB	SB	SB	SB	SB	SB	SB	SB	SB	SB	SB	SB	SB
TOP DEPTH	6	4	7	2	2	2	2	2	7	2	6	2	2
BOTTOM DEPTH	7	6	9	4	3	4	3	6	9	6	7	4	3
PETROLEUM HYDROCARBONS (UG/KG)													
DRO (C08-C28)	1400 J												
TPH (C06-C12)	1200 UJ												
SEMIVOLATILES (UG/KG)													
1,2,4,5-TETRACHLOROBENZENE													
1,2,4-TRICHLOROBENZENE													
1,2-DICHLOROBENZENE													
1,3-DICHLOROBENZENE													
1,4-DICHLOROBENZENE													
1,4-NAPHTHOQUINONE													
1,4-PHENYLENEDIAMINE													
1-NAPHTHYLAMINE													
2,2'-OXYBIS(1-CHLOROPROPANE)													
2,3,4,6-TETRACHLOROPHENOL													
2,4,5-TRICHLOROPHENOL													
2,4,6-TRICHLOROPHENOL													
2,4-DICHLOROPHENOL													
2,4-DIMETHYLPHENOL													
2,4-DINITROPHENOL													
2,6-DICHLOROPHENOL													
2-ACETYLAMINOFLUORENE													
2-CHLORONAPHTHALENE													
2-CHLOROPHENOL													
2-METHYLNAPHTHALENE													
2-METHYLPHENOL													
2-NAPHTHYLAMINE													
2-NITROANILINE													
2-NITROPHENOL													
2-PICOLINE													
3&4-METHYLPHENOL													
3,3'-DICHLOROBENZIDINE													
3,3'-DIMETHYLBENZIDINE													
3-METHYLCHOLANTHRENE													
3-NITROANILINE													
4,6-DINITRO-2-METHYLPHENOL													
4-AMINOBIPHENYL													
4-BROMOPHENYL PHENYL ETHER													
4-CHLORO-3-METHYLPHENOL													
4-CHLOROANILINE													
4-CHLOROPHENYL PHENYL ETHER													
4-NITROANILINE													
4-NITROPHENOL													
4-NITROQUINOLINE-1-OXIDE													
5-NITRO-O-TOLUIDINE													
7,12-DIMETHYLBENZ(A)ANTHRACENE													
A,A-DIMETHYLPHENETHYLAMINE													
ACENAPHTHENE													
ACENAPHTHYLENE													
ACETOPHENONE													
ANILINE													
ANTHRACENE													
ARAMITE													
BENZO(A)ANTHRACENE													
BENZO(A)PYRENE													
BENZO(B)FLUORANTHENE													
BENZO(G,H,I)PERYLENE													
BENZO(K)FLUORANTHENE													
BENZYL ALCOHOL													
BIS(2-CHLOROETHOXY)METHANE													
BIS(2-CHLOROETHYL)ETHER													
BIS(2-ETHYLHEXYL)PHTHALATE													
BUTYL BENZYL PHTHALATE													
CHLOROBENZILATE													
CHRYSENE													
DIALLATE													
DIBENZO(A,H)ANTHRACENE													
DIBENZOFURAN													

TABLE A-2

SUBSURFACE SOIL SAMPLE DATA
SWMU 16
NSA CRANE
CRANE, INDIANA

LOCATION	16SB198	16SB199	16SB199	16SB200	16SB201	16SB202	16SB203	16SB204	16SB204	16SB205	16SB205	16SB206	16SB209
SAMPLE ID	16SB1980607	16SB1990406	16SB1990709	16SB2000204	16SB2010203	16SB2020204	16SB2030203	16SB2040206	16SB2040709	16SB2050206	16SB2050607	16SB2060204	16SB209-0203
SAMPLE DATE	20110823	20110824	20110824	20110825	20110825	20110825	20110825	20110825	20110825	20110825	20110825	20110825	20121006
ROUND													
EVENT													
SAMPLE CODE	NORMAL	NORMAL	NORMAL	NORMAL	NORMAL	NORMAL	NORMAL	NORMAL	NORMAL	NORMAL	NORMAL	NORMAL	NORMAL
MATRIX	SO	SO	SO	SO	SO	SO	SO	SO	SO	SO	SO	SO	SO
SAMPLE TYPE	NORMAL	NORMAL	NORMAL	NORMAL	NORMAL	NORMAL	NORMAL	NORMAL	NORMAL	NORMAL	NORMAL	NORMAL	NORMAL
SUBMATRIX	SB	SB	SB	SB	SB	SB	SB	SB	SB	SB	SB	SB	SB
TOP DEPTH	6	4	7	2	2	2	2	2	7	2	6	2	2
BOTTOM DEPTH	7	6	9	4	3	4	3	6	9	6	7	4	3
DIETHYL PHTHALATE													
DIMETHYL PHTHALATE													
DI-N-BUTYL PHTHALATE													
DI-N-OCTYL PHTHALATE													
DIPHENYLAMINE													
ETHYL METHANE SULFONATE													
FLUORANTHENE													
FLUORENE													
HEXACHLOROBENZENE													
HEXACHLOROBUTADIENE													
HEXACHLOROCYCLOPENTADIENE													
HEXACHLOROETHANE													
HEXACHLOROPROPENE													
INDENO(1,2,3-CD)PYRENE													
ISODRIN													
ISOPHORONE													
ISOSAFROLE													
KEPONE													
METHAPYRILENE													
METHYL METHANE SULFONATE													
NAPHTHALENE													
N-NITROSODIETHYLAMINE													
N-NITROSODIMETHYLAMINE													
N-NITROSO-DI-N-BUTYLAMINE													
N-NITROSO-DI-N-PROPYLAMINE													
N-NITROSOMETHYLETHYLAMINE													
N-NITROSOMORPHOLINE													
N-NITROSOPIPERIDINE													
N-NITROSOPYRROLIDINE													
O,O,O-TRIETHYL PHOSPHOROTHIOATE													
O-TOLUIDINE													
PENTACHLOROBENZENE													
PENTACHLOROETHANE													
PENTACHLORONITROBENZENE													
PHENACETIN													
PHENANTHRENE													
PHENOL													
PRONAMIDE													
PYRENE													
PYRIDINE													
SAFROLE													
SOLVENT YELLOW 2													
VOLATILES (UG/KG)													
1,1,1,2-TETRACHLOROETHANE	0.509 U												
1,1,1-TRICHLOROETHANE	0.509 U												
1,1,2,2-TETRACHLOROETHANE	0.509 U												
1,1,2-TRICHLOROETHANE	0.509 U	0.495 U	0.524 U	0.546 U	0.504 U	0.533 U	0.521 U	2.74	0.478 U	1.32	1.83	0.714 J	3 U
1,1,2-TRICHLOROTRIFLUOROETHANE	2.71 U												
1,1-DICHLOROETHANE	0.509 U												
1,1-DICHLOROETHENE	0.509 U												
1,2,3-TRICHLOROBENZENE	0.509 U												
1,2,3-TRICHLOROPROPANE													
1,2,4-TRICHLOROBENZENE	0.509 U												
1,2-DIBROMO-3-CHLOROPROPANE	0.509 U												
1,2-DIBROMOETHANE	0.509 U												
1,2-DICHLOROBENZENE	0.509 U												
1,2-DICHLOROETHANE	0.509 U												
1,2-DICHLOROPROPANE	0.509 U												
1,3-DICHLOROBENZENE	0.509 U												
1,4-DICHLOROBENZENE	0.509 U												
1,4-DIOXANE													
2-BUTANONE	3.04 J												
2-HEXANONE	2.54 U												
3-CHLOROPROPENE													
4-METHYL-2-PENTANONE	2.12 U												
ACETONE	21.2												
ACETONITRILE													

TABLE A-2

SUBSURFACE SOIL SAMPLE DATA
SWMU 16
NSA CRANE
CRANE, INDIANA

LOCATION	16SB198	16SB199	16SB199	16SB200	16SB201	16SB202	16SB203	16SB204	16SB204	16SB205	16SB205	16SB206	16SB209
SAMPLE ID	16SB1980607	16SB1990406	16SB1990709	16SB2000204	16SB2010203	16SB2020204	16SB2030203	16SB2040206	16SB2040709	16SB2050206	16SB2050607	16SB2060204	16SB209-0203
SAMPLE DATE	20110823	20110824	20110824	20110825	20110825	20110825	20110825	20110825	20110825	20110825	20110825	20110825	20121006
ROUND													
EVENT													
SAMPLE CODE	NORMAL	NORMAL	NORMAL	NORMAL	NORMAL	NORMAL	NORMAL	NORMAL	NORMAL	NORMAL	NORMAL	NORMAL	NORMAL
MATRIX	SO	SO	SO	SO	SO	SO	SO	SO	SO	SO	SO	SO	SO
SAMPLE TYPE	NORMAL	NORMAL	NORMAL	NORMAL	NORMAL	NORMAL	NORMAL	NORMAL	NORMAL	NORMAL	NORMAL	NORMAL	NORMAL
SUBMATRIX	SB	SB	SB	SB	SB	SB	SB	SB	SB	SB	SB	SB	SB
TOP DEPTH	6	4	7	2	2	2	2	2	7	2	6	2	2
BOTTOM DEPTH	7	6	9	4	3	4	3	6	9	6	7	4	3
ACROLEIN	2.63 U												
ACRYLONITRILE													
BENZENE	0.509 U												
BROMODICHLOROMETHANE	0.509 U												
BROMOFORM	0.509 U												
BROMOMETHANE	0.509 U												
CARBON DISULFIDE	2.12 U												
CARBON TETRACHLORIDE	0.509 U												3 U
CHLOROBENZENE	0.509 U												
CHLORODIBROMOMETHANE	0.509 U												
CHLOROETHANE	0.509 U												
CHLOROFORM	0.509 U												
CHLOROMETHANE	0.509 U												
CHLOROPRENE													
CIS-1,2-DICHLOROETHENE	0.509 U	0.495 U	0.524 U	1790	0.378 J	0.533 U	0.521 U	46.9	4.23	109	168	121	3 UJ
CIS-1,3-DICHLOROPROPENE	0.509 U												
CYCLOHEXANE	0.509 U												
DIBROMOMETHANE													
DICHLORODIFLUOROMETHANE	0.576 U												
ETHYL METHACRYLATE													
ETHYLBENZENE	0.509 U												
ISOBUTANOL													
ISOPROPYLBENZENE	0.509 U												
METHACRYLONITRILE													
METHYL ACETATE	2.81 U												
METHYL IODIDE													
METHYL METHACRYLATE													
METHYL TERT-BUTYL ETHER	0.509 U												
METHYLENE CHLORIDE	3.39 U												
PROPIONITRILE													
STYRENE	0.509 U												
TETRACHLOROETHENE	0.509 U												3 U
TOLUENE	0.509 U												
TOTAL XYLENES	0.509 U												
TRANS-1,2-DICHLOROETHENE	0.509 U	0.495 U	0.524 U	24.3	0.504 U	0.533 U	0.521 U	0.5 U	0.478 U	2.1	3.33	49.4	3 U
TRANS-1,3-DICHLOROPROPENE	0.509 U												
TRANS-1,4-DICHLORO-2-BUTENE													
TRICHLOROETHENE	0.559 U	0.454 J	0.323 J	37500	0.555 U	16	0.373 J	546	57.9	1250	2080	2030	45.5 J
TRICHLOROFLUOROMETHANE	0.509 U												
VINYL ACETATE	2.12 U												
VINYL CHLORIDE	0.509 U	0.495 U	0.524 U	2.26	0.504 U	0.533 U	0.521 U	0.5 U	0.478 U	0.474 U	0.511 U	0.564 U	3 U

TABLE A-2

SUBSURFACE SOIL SAMPLE DATA
SWMU 16
NSA CRANE
CRANE, INDIANA

LOCATION	16SB219	16SB220	16SB236	16SB237	16SB238	16SB239	16SB240	16SB241
SAMPLE ID	16SB219-0206	16SB220-0206	16SB2360206	16SB2370206	16SB2380206	16SB2390206	16SB2400206	16SB2410206
SAMPLE DATE	20121006	20121006	20121130	20121130	20121130	20121130	20121130	20121130
ROUND								
EVENT								
SAMPLE CODE	NORMAL	NORMAL	NORMAL	NORMAL	NORMAL	NORMAL	NORMAL	NORMAL
MATRIX	SO	SO	SO	SO	SO	SO	SO	SO
SAMPLE TYPE	NORMAL	NORMAL	NORMAL	NORMAL	NORMAL	NORMAL	NORMAL	NORMAL
SUBMATRIX	SB	SB	SB	SB	SB	SB	SB	SB
TOP DEPTH	2	2	2	2	2	2	2	2
BOTTOM DEPTH	6	6	6	6	6	6	6	6
EXPLOSIVES (MG/KG)								
1,3,5-TRINITROBENZENE								
1,3-DINITROBENZENE								
2,4,6-TRINITROTOLUENE								
2,4-DINITROTOLUENE								
2,6-DINITROTOLUENE								
2-AMINO-4,6-DINITROTOLUENE								
2-NITROTOLUENE								
3-NITROTOLUENE								
4-AMINO-2,6-DINITROTOLUENE								
4-NITROTOLUENE								
HMX								
NITROBENZENE								
PICRAMIC ACID								
PICRIC ACID								
RDX								
TETRYL								
HERBICIDES (UG/KG)								
HEXACHLOROPHENE								
PENTACHLOROPHENOL								
METALS (MG/KG)								
ALUMINUM								
ANTIMONY								
ARSENIC								
BARIUM								
BERYLLIUM								
CADMIUM								
CALCIUM								
CHROMIUM								
COBALT								
COPPER								
IRON								
LEAD								
LITHIUM								
MAGNESIUM								
MANGANESE								
MERCURY								
NICKEL								
POTASSIUM								
SELENIUM								
SILVER								
SODIUM								
STRONTIUM								
THALLIUM								
TIN								
TITANIUM								
VANADIUM								
ZINC								
METALS (UG/KG)								
LEAD								
MISCELLANEOUS PARAMETERS (%)								
PERCENT MOISTURE								
MISCELLANEOUS PARAMETERS (MEQ/100)								
CATION EXCHANGE CAPACITY								
MISCELLANEOUS PARAMETERS (MG/KG)								
TOTAL ORGANIC CARBON								
MISCELLANEOUS PARAMETERS (S.U.)								
PH								
PESTICIDES/PCBS (UG/KG)								
AROCLOR-1016								
AROCLOR-1221								
AROCLOR-1232								
AROCLOR-1242								
AROCLOR-1248								
AROCLOR-1254								
AROCLOR-1260								

TABLE A-2

SUBSURFACE SOIL SAMPLE DATA
SWMU 16
NSA CRANE
CRANE, INDIANA

LOCATION	16SB219	16SB220	16SB236	16SB237	16SB238	16SB239	16SB240	16SB241
SAMPLE ID	16SB219-0206	16SB220-0206	16SB2360206	16SB2370206	16SB2380206	16SB2390206	16SB2400206	16SB2410206
SAMPLE DATE	20121006	20121006	20121130	20121130	20121130	20121130	20121130	20121130
ROUND								
EVENT								
SAMPLE CODE	NORMAL	NORMAL	NORMAL	NORMAL	NORMAL	NORMAL	NORMAL	NORMAL
MATRIX	SO	SO	SO	SO	SO	SO	SO	SO
SAMPLE TYPE	NORMAL	NORMAL	NORMAL	NORMAL	NORMAL	NORMAL	NORMAL	NORMAL
SUBMATRIX	SB	SB	SB	SB	SB	SB	SB	SB
TOP DEPTH	2	2	2	2	2	2	2	2
BOTTOM DEPTH	6	6	6	6	6	6	6	6
PETROLEUM HYDROCARBONS (UG/KG)								
DRO (C08-C28)								
TPH (C06-C12)								
SEMIVOLATILES (UG/KG)								
1,2,4,5-TETRACHLOROBENZENE								
1,2,4-TRICHLOROBENZENE								
1,2-DICHLOROBENZENE								
1,3-DICHLOROBENZENE								
1,4-DICHLOROBENZENE								
1,4-NAPHTHOQUINONE								
1,4-PHENYLENEDIAMINE								
1-NAPHTHYLAMINE								
2,2'-OXYBIS(1-CHLOROPROPANE)								
2,3,4,6-TETRACHLOROPHENOL								
2,4,5-TRICHLOROPHENOL								
2,4,6-TRICHLOROPHENOL								
2,4-DICHLOROPHENOL								
2,4-DIMETHYLPHENOL								
2,4-DINITROPHENOL								
2,6-DICHLOROPHENOL								
2-ACETYLAMINOFLUORENE								
2-CHLORONAPHTHALENE								
2-CHLOROPHENOL								
2-METHYLNAPHTHALENE								
2-METHYLPHENOL								
2-NAPHTHYLAMINE								
2-NITROANILINE								
2-NITROPHENOL								
2-PICOLINE								
3&4-METHYLPHENOL								
3,3'-DICHLOROBENZIDINE								
3,3'-DIMETHYLBENZIDINE								
3-METHYLCHOLANTHRENE								
3-NITROANILINE								
4,6-DINITRO-2-METHYLPHENOL								
4-AMINOBIPHENYL								
4-BROMOPHENYL PHENYL ETHER								
4-CHLORO-3-METHYLPHENOL								
4-CHLOROANILINE								
4-CHLOROPHENYL PHENYL ETHER								
4-NITROANILINE								
4-NITROPHENOL								
4-NITROQUINOLINE-1-OXIDE								
5-NITRO-O-TOLUIDINE								
7,12-DIMETHYLBENZ(A)ANTHRACENE								
A,A-DIMETHYLPHENETHYLAMINE								
ACENAPHTHENE								
ACENAPHTHYLENE								
ACETOPHENONE								
ANILINE								
ANTHRACENE								
ARAMITE								
BENZO(A)ANTHRACENE								
BENZO(A)PYRENE								
BENZO(B)FLUORANTHENE								
BENZO(G,H,I)PERYLENE								
BENZO(K)FLUORANTHENE								
BENZYL ALCOHOL								
BIS(2-CHLOROETHOXY)METHANE								
BIS(2-CHLOROETHYL)ETHER								
BIS(2-ETHYLHEXYL)PHTHALATE								
BUTYL BENZYL PHTHALATE								
CHLOROBENZILATE								
CHRYSENE								
DIALLATE								
DIBENZO(A,H)ANTHRACENE								
DIBENZOFURAN								

TABLE A-2

SUBSURFACE SOIL SAMPLE DATA
SWMU 16
NSA CRANE
CRANE, INDIANA

LOCATION	16SB219	16SB220	16SB236	16SB237	16SB238	16SB239	16SB240	16SB241
SAMPLE ID	16SB219-0206	16SB220-0206	16SB2360206	16SB2370206	16SB2380206	16SB2390206	16SB2400206	16SB2410206
SAMPLE DATE	20121006	20121006	20121130	20121130	20121130	20121130	20121130	20121130
ROUND								
EVENT								
SAMPLE CODE	NORMAL	NORMAL	NORMAL	NORMAL	NORMAL	NORMAL	NORMAL	NORMAL
MATRIX	SO	SO	SO	SO	SO	SO	SO	SO
SAMPLE TYPE	NORMAL	NORMAL	NORMAL	NORMAL	NORMAL	NORMAL	NORMAL	NORMAL
SUBMATRIX	SB	SB	SB	SB	SB	SB	SB	SB
TOP DEPTH	2	2	2	2	2	2	2	2
BOTTOM DEPTH	6	6	6	6	6	6	6	6
DIETHYL PHTHALATE								
DIMETHYL PHTHALATE								
DI-N-BUTYL PHTHALATE								
DI-N-OCTYL PHTHALATE								
DIPHENYLAMINE								
ETHYL METHANE SULFONATE								
FLUORANTHENE								
FLUORENE								
HEXACHLOROBENZENE								
HEXACHLOROBUTADIENE								
HEXACHLOROCYCLOPENTADIENE								
HEXACHLOROETHANE								
HEXACHLOROPROPENE								
INDENO(1,2,3-CD)PYRENE								
ISODRIN								
ISOPHORONE								
ISOSAFROLE								
KEPONE								
METHAPYRILENE								
METHYL METHANE SULFONATE								
NAPHTHALENE								
N-NITROSODIETHYLAMINE								
N-NITROSODIMETHYLAMINE								
N-NITROSO-DI-N-BUTYLAMINE								
N-NITROSO-DI-N-PROPYLAMINE								
N-NITROSOMETHYLETHYLAMINE								
N-NITROSOMORPHOLINE								
N-NITROSOPIPERIDINE								
N-NITROSOPYRROLIDINE								
O,O,O-TRIETHYL PHOSPHOROTHIOATE								
O-TOLUIDINE								
PENTACHLOROBENZENE								
PENTACHLOROETHANE								
PENTACHLORONITROBENZENE								
PHENACETIN								
PHENANTHRENE								
PHENOL								
PRONAMIDE								
PYRENE								
PYRIDINE								
SAFROLE								
SOLVENT YELLOW 2								
VOLATILES (UG/KG)								
1,1,1,2-TETRACHLOROETHANE								
1,1,1-TRICHLOROETHANE								
1,1,2,2-TETRACHLOROETHANE								
1,1,2-TRICHLOROETHANE	2.55 U	2.42 U	2.34 U	2.31 U	2.23 U	1.79 U	2.31 U	2.57 U
1,1,2-TRICHLOROTRIFLUOROETHANE								
1,1-DICHLOROETHANE								
1,1-DICHLOROETHENE								
1,2,3-TRICHLOROBENZENE								
1,2,3-TRICHLOROPROPANE								
1,2,4-TRICHLOROBENZENE								
1,2-DIBROMO-3-CHLOROPROPANE								
1,2-DIBROMOETHANE								
1,2-DICHLOROBENZENE								
1,2-DICHLOROETHANE								
1,2-DICHLOROPROPANE								
1,3-DICHLOROBENZENE								
1,4-DICHLOROBENZENE								
1,4-DIOXANE								
2-BUTANONE								
2-HEXANONE								
3-CHLOROPROPENE								
4-METHYL-2-PENTANONE								
ACETONE								
ACETONITRILE								

TABLE A-2

SUBSURFACE SOIL SAMPLE DATA
SWMU 16
NSA CRANE
CRANE, INDIANA

LOCATION	**16SB219**	**16SB220**	**16SB236**	**16SB237**	**16SB238**	**16SB239**	**16SB240**	**16SB241**
SAMPLE ID	**16SB219-0206**	**16SB220-0206**	**16SB2360206**	**16SB2370206**	**16SB2380206**	**16SB2390206**	**16SB2400206**	**16SB2410206**
SAMPLE DATE	**20121006**	**20121006**	**20121130**	**20121130**	**20121130**	**20121130**	**20121130**	**20121130**
ROUND								
EVENT								
SAMPLE CODE	**NORMAL**	**NORMAL**	**NORMAL**	**NORMAL**	**NORMAL**	**NORMAL**	**NORMAL**	**NORMAL**
MATRIX	**SO**	**SO**	**SO**	**SO**	**SO**	**SO**	**SO**	**SO**
SAMPLE TYPE	**NORMAL**	**NORMAL**	**NORMAL**	**NORMAL**	**NORMAL**	**NORMAL**	**NORMAL**	**NORMAL**
SUBMATRIX	**SB**	**SB**	**SB**	**SB**	**SB**	**SB**	**SB**	**SB**
TOP DEPTH	**2**	**2**	**2**	**2**	**2**	**2**	**2**	**2**
BOTTOM DEPTH	**6**	**6**	**6**	**6**	**6**	**6**	**6**	**6**
ACROLEIN								
ACRYLONITRILE								
BENZENE								
BROMODICHLOROMETHANE								
BROMOFORM								
BROMOMETHANE								
CARBON DISULFIDE								
CARBON TETRACHLORIDE	2.55 U	2.42 U	2.34 U	2.31 U	2.23 U	1.79 U	2.31 U	2.57 U
CHLOROBENZENE								
CHLORODIBROMOMETHANE								
CHLOROETHANE								
CHLOROFORM								
CHLOROMETHANE								
CHLOROPRENE								
CIS-1,2-DICHLOROETHENE	2.55 UJ	2.42 U	2.34 U	2.31 U	2.23 U	1.79 U	2.31 U	2.57 U
CIS-1,3-DICHLOROPROPENE								
CYCLOHEXANE								
DIBROMOMETHANE								
DICHLORODIFLUOROMETHANE								
ETHYL METHACRYLATE								
ETHYLBENZENE								
ISOBUTANOL								
ISOPROPYLBENZENE								
METHACRYLONITRILE								
METHYL ACETATE								
METHYL IODIDE								
METHYL METHACRYLATE								
METHYL TERT-BUTYL ETHER								
METHYLENE CHLORIDE								
PROPIONITRILE								
STYRENE								
TETRACHLOROETHENE	2.55 U	2.42 U	2.34 U	2.31 U	2.23 U	1.79 U	2.31 U	2.57 U
TOLUENE								
TOTAL XYLENES								
TRANS-1,2-DICHLOROETHENE	2.55 U	2.42 U	2.34 U	2.31 U	2.23 U	1.79 U	2.31 U	2.57 U
TRANS-1,3-DICHLOROPROPENE								
TRANS-1,4-DICHLORO-2-BUTENE								
TRICHLOROETHENE	56	2.42 U	2.34 U	2.31 U	2.23 U	1.79 U	2.31 U	2.57 U
TRICHLOROFLUOROMETHANE								
VINYL ACETATE								
VINYL CHLORIDE	2.55 U	2.42 UJ	2.34 U	2.31 U	2.23 U	1.79 U	2.31 U	2.57 U

APPENDIX B

UST FIELD NOTES

Trip Report: NSA Crane, Crane, Indiana

Date: 10 July 2011 through 15 July 2011

Activity/Subject: Underground Storage Tank (UST) SWMU 16 Open/Sample Contents

The above activity occurred over the course of two days. The penetration of the tank took place on Wednesday 13 July 2011 at approximately 1700. Subsequent sampling took place on 15 July 2011 at which time the analytical suite was determined. The course of events are as follows:

11 July 2011 @ ~ 1000 Tom Dickson (TD) was escorted by John Floyd(JF) to the tank location. A cursory examination of the area was made including selecting site control points, electrical grounding points, placement of nitrogen cylinder to be used for inerting purposes.

12 July 2011 ~1000 TD went back to the tank location to gather additional information.

Residual soils were removed from within the access vault on top of the tank. The tank is oriented 253˚ to the southwest with the entrance driveway oriented at 310˚ to the northwest.

There are 4 entry points into the tank – These are

- (1) Fill port (2-inch diameter with a cap in place)
- (1) blank (1/2 inch plug set in a reducer bushing)
- (2) 3/8 inch supply lines (also set in reducer bushings)

With the access vault clean, the access vault was filled with water slightly above the fittings to determine how quickly it would drain. The water head was integral in providing both an oxygen deficient atmosphere as well as providing cooling of the drill bit. This drainage test would also determine if sealant was necessary to maintain the water blanket. The water blanket maintained it's integrity for over ½ hour more than enough time to drill through the external shell.

Additional physical features of the tank determined from within the access vault indicated that over 18-inches exposed surface of the tank, that the from the apex of the tank moving 9-inches in each direction we saw a 1 ½ inch depth change to 19 ½ inches. This severe radius does not support a 48-inch diameter tank structure. This slope indicated that the tank was much smaller than suspected or it was an oval shaped tank.

Fittings – While the water blanket was in place, the fittings were tested to determine if these opportunistic entry routes were an option. Of the fittings only one service line was loose under light pressure. When it was cracked some bubbles were noted and it was shut. At that time a light turpentine odor was noted indicating that the tank most likely was used for gas storage as previously anticipated given its location and surrounding structures. One of the fitting lines ran under the concrete structure through 1.5 inch steel conduit to the north. It was is suspected that this structure maybe associated with the dispensing station island.

Magnetometer survey – A sweep of the area was not extremely productive as conduit to the east provided a lot of interference created by the presence of underground conduit. So this effort to define the tanks boundary was unsuccessful.

Hand auger borings – Based on the magnetometer survey, an estimated tank boundary was established. Two hand auger holes were dug equal distance from the vault entrance in an effort to determine the tank boundaries. These holes were dug 4-feet from the centerline. They were dug well past the 18-inches below ground surface where the tank top was evident in the access vault. The tank was not discovered in these borings indicating the tank length to be less than 8-feet. The tank had been bedded in a sand base which was evident passing the subsurface materials. It had been previously reported that the tank was suspected to be a 550 gallon tank. Dimensions for tanks of this size are generally L x W x H (in.) 72 x 48 x 48. This is still within our hand auger boring profile.

Sufficient information was gathered to determine the set up for penetration of the outer wall of the tank. The location selected was forward of the fill port.

13 July 2011 – At approximately 1600, TD notified personnel in Bldg 2708 that the tank work would be beginning and wanted to confirm all personnel were out of the facility. This was confirmed.

TD began site set measures at the tank location. The boundary was set north of Bldg 149A. Air compressor lines for tool operation were red; breathing air were black. PPE – Level B operation employing flame retardant pants, jacket, and gloves with a full face ultra-vue mask.

Equipment operation was inspected - All was in working order.

JF arrived onsite ~1645-1700 – A second walk through was conducted of how the procedure would be employed.

1730 with PPE in place,

Electrical grounding was placed from a supply line on top of the tank to the electrical pole

Water blanket was applied over the apex of the tank approximately 1 to 2 inches above

3/8 drill bit was used to make the pilot hole. Upon the completion of the pilot hole the water level did not change indicating that the tank was also field with water. This could have been part of the cleaning process. As no head space was available, inerting using the nitrogen gas was not necessary. Fluctuations in the LEL level were noted in the access vault however they were not sustained and could not be reproduced in the open air above the vault.

A 1-inch drill bit was then employed to enlarge the hole to allow a number of sampling apparatus to be placed in the hole.

With the hole open, a ruler was inserted into the hole to determine the tank diameter as well as probing the bottom for sediment accumulation. The diameter of the tank measured 28.8 inches. Several attempts were made to determine if the ruler had contacted an anode plate or some other obstruction or whether this was the bottom of the tank. If this was the bottom of the tank then it was much smaller than anticipated.

Flow Back Tank – A flow back tank is a small tank that receives fuel from the supply lines or dispensing unit when there is a loss of suction in either unit. It is suspected that this tank given the size maybe a flow back tank.

Once the hole was finished a hole test plug was inserted to blank the hole. Sampling would be conducted once the analysis suite was determined.

The work area was cleaned the test boring were filled. Demobilization occurred at approximatey 1900 hours back to the trailer.

Recommendation – The main tanks may have been removed from the system. However, if piping remains intact it can be tracked back to the main tanks if they exist.

Conclusion: In the closing or abandonment of this system, it appears the cleaning and swabbing of the tank and if still present the lines were well done as very little fuel remnants were noted in the penetration of the tank. It also appears when the tank was abandoned it was filled with water as part of this process as there was a slight head pressure associated with the tank well above say an identified infiltration point which would be marked by the rise and fall levels, especially at this shallow depth.

APPENDIX C

SITE PHOTOGRAPHS

Appendix C – NSA Crane SWMU 16 / Building 146 Site Photographs

SITE: SWMU 16 - Building 146 and Vicinity	**PHOTOGRAPHER:** K. Losekamp **VIEW:** South	**DESCRIPTION:** West side of Building 146 – TCE Area showing lightning arresting towers, manhole, and railroad line adjacent to loading platform.	1 1/24/2013

SITE: SWMU 16 - Building 146 and Vicinity	**PHOTOGRAPHER:** K. Losekamp **VIEW:** North	**DESCRIPTION:** West side of Building 146 – TCE Area showing railroad line adjacent to loading platform.	2 1/24/2013

Appendix C – NSA Crane SWMU 16 / Building 146 Site Photographs

SITE: SWMU 16 - Building 146 and Vicinity	**PHOTOGRAPHER:** K. Losekamp **VIEW:** North	**DESCRIPTION:** West side of Building 146 – TCE Area showing lightning arresting towers, manhole, and railroad line.	3 1/24/2013

SITE: SWMU 16 - Building 146 and Vicinity	**PHOTOGRAPHER:** K. Losekamp **VIEW:** North	**DESCRIPTION:** West side of Building 146 – TCE Area showing sanitary sewer pipeline manhole (visible in photo 3) near railroad line.	4 1/24/2013

Appendix C – NSA Crane SWMU 16 / Building 146 Site Photographs

SITE: SWMU 16 - Building 146 and Vicinity	**PHOTOGRAPHER:** K. Losekamp **VIEW:** North	**DESCRIPTION:** Covered walkway adjacent to railroad track, in the northern part of the Building 146 – TCE Area. (visible in Photo 1 in background).	5 1/24/2013

SITE: SWMU 16 - Building 146 and Vicinity	**PHOTOGRAPHER:** K. Losekamp **VIEW:** North	**DESCRIPTION:** Interior of covered walkway in the northern part of the Building 146 – TCE Area.	6 1/24/2013

Appendix C – NSA Crane SWMU 16 / Building 146 Site Photographs

SITE: SWMU 16 - Building 146 and Vicinity	**PHOTOGRAPHER:** K. Losekamp **VIEW:** Southwest	**DESCRIPTION:** View of North Settling Tank, Monitoring Well 16MWT17 (to be abandoned), and the covered walkway in the Northern TCE Areas next to Building 146.	7 1/24/2013

SITE: SWMU 16 - Building 146 and Vicinity	**PHOTOGRAPHER:** K. Losekamp **VIEW:** West	**DESCRIPTION:** View of North Settling Tank, in the Northern TCE Areas near Building 146.	8 1/24/2013

Appendix C – NSA Crane SWMU 16 / Building 146 Site Photographs

SITE: SWMU 16 - Building 146 and Vicinity	**PHOTOGRAPHER:** K. Losekamp **VIEW:** South	**DESCRIPTION:** View of West Settling Tank, adjacent monitoring wells, and electrical control panel for settling tank, on the west and beyond the western perimeter of Northern TCE Areas.	9 1/24/2013

SITE: SWMU 16 - Building 146 and Vicinity	**PHOTOGRAPHER:** K. Losekamp **VIEW:** West	**DESCRIPTION:** View of West Settling Tank and electrical control panel for settling tank, beyond the western perimeter of the Northern TCE Areas.	10 1/24/2013

Appendix C – NSA Crane SWMU 16 / Building 146 Site Photographs

SITE: SWMU 16 - Building 146 and Vicinity	**PHOTOGRAPHER:** K. Losekamp **VIEW:** West	**DESCRIPTION:** Close-up view of West Settling Tank, beyond the western perimeter of the Northern TCE Areas. Danger sign indicates that the West Settling Tank is a permit-required confined space.	11 1/24/2013

SITE: SWMU 16 - Building 146 and Vicinity	**PHOTOGRAPHER:** K. Losekamp **VIEW:** East	**DESCRIPTION:** View of soil removal area M-1 (left of road) and M-2 (right of road) to address areas of soil with metals contamination, south of Building 146 and near the end of the railroad track.	12 1/24/2013

Appendix C – NSA Crane SWMU 16 / Building 146 Site Photographs

SITE: SWMU 16 - Building 146 and Vicinity	**PHOTOGRAPHER:** K. Losekamp **VIEW:** East	**DESCRIPTION:** View of soil removal area M-1, grassed area behind railroad track to address soil with metals contamination south of Building 146.	13 1/24/2013

SITE: SWMU 16 - Building 146 and Vicinity	**PHOTOGRAPHER:** K. Losekamp **VIEW:** North	**DESCRIPTION:** View of west side of Building 146, showing the majority of the TCE soil removal area (photo background) along the western side of Building 146, metals soil removal area M-2 (photo foreground).	14 1/24/2013

Appendix C – NSA Crane SWMU 16 / Building 146 Site Photographs

SITE: SWMU 16 - Building 146 and Vicinity	**PHOTOGRAPHER:** K. Losekamp **VIEW:** West	**DESCRIPTION:** View of metals soil removal area M-2 (to the left of the road shoulder).	15 1/24/2013

SITE: SWMU 16 - Building 146 and Vicinity	**PHOTOGRAPHER:** K. Losekamp **VIEW:** South	**DESCRIPTION:** View of South Gate for perimeter fencing around Building 146. (notice grounding cabling and connections on fence posts and gate sections). Soil removal area M-3 is through this gate and outside the perimeter fencing.	16 1/24/2013

Appendix C – NSA Crane SWMU 16 / Building 146 Site Photographs

SITE: SWMU 16 - Building 146 and Vicinity	**PHOTOGRAPHER:** K. Losekamp **VIEW:** South	**DESCRIPTION:** View of soil removal area M-3 beyond the South Gate and outside the perimeter fencing.	17 1/24/2013

APPENDIX D

BUILDING 146 DESIGN DRAWINGS

REVISIONS				
LTR	DESCRIPTION	PREP'D BY	DATE	APPROVED
A	AS-BUILT	TND	12-21-98	

△ ELECTRICAL NOTES

1. 240 V, 3 POLE, FUSED DISC. SW. WITH NEMA 3R ENCLOSURE. FUSE AT 30A. FEED FROM LINE SIDE OF EXISTING DISCONNECT ON POLE. MOUNT ON POLE ADJACENT TO EXISTING DISC. SW.
2. (A) 2-#10 'THWN' & #10 GND IN DIRECT, BURIED 24" BELOW GRADE
3. WEATHERPROOF RECEPTACLE, NEMA L15-30R. MOUNT 6" ABOVE GRADE.
4. 240 V, 3 POLE, FUSED DISC. SW. WITH NEMA 3R ENCLOSURE. FUSE AT 30A. MOUNT SWITCH ON SUBSTATION FENCE. FEED FROM 240V, 1Ø TRANSFORMER WITH 2-#10 THWN & #10 GND IN DIRECT, BURIED 24" BELOW GRADE. PROVIDE 5/8" X 10' GROUND ROD, CONNECT TO SWITCH WITH #8 BARE COPPER.
5. 2-#10 & #10 GND. TYPE 'UF-B' CABLE DIRECT BURIED 24" BELOW GRADE. (SEE SITE PLAN FOR REVISED ROUTING.)
6. SUMP PUMPS TO BE RATED 240V, 1Ø. PROVIDE WITH CORD & L15-30P PLUG.
7. ALL ELECTRICAL INSTALLATIONS SHALL BE IN ACCORDANCE WITH THE 1996 EDITION OF THE NATIONAL ELECTRICAL CODE, N.F.P.A. NO. 70.

(A) ① SUMP #1 & #2 2 (EA.) SIMPLEX CONTROL PANEL WITH HIGH WATER ALARMS (AUDIO & VISUAL).

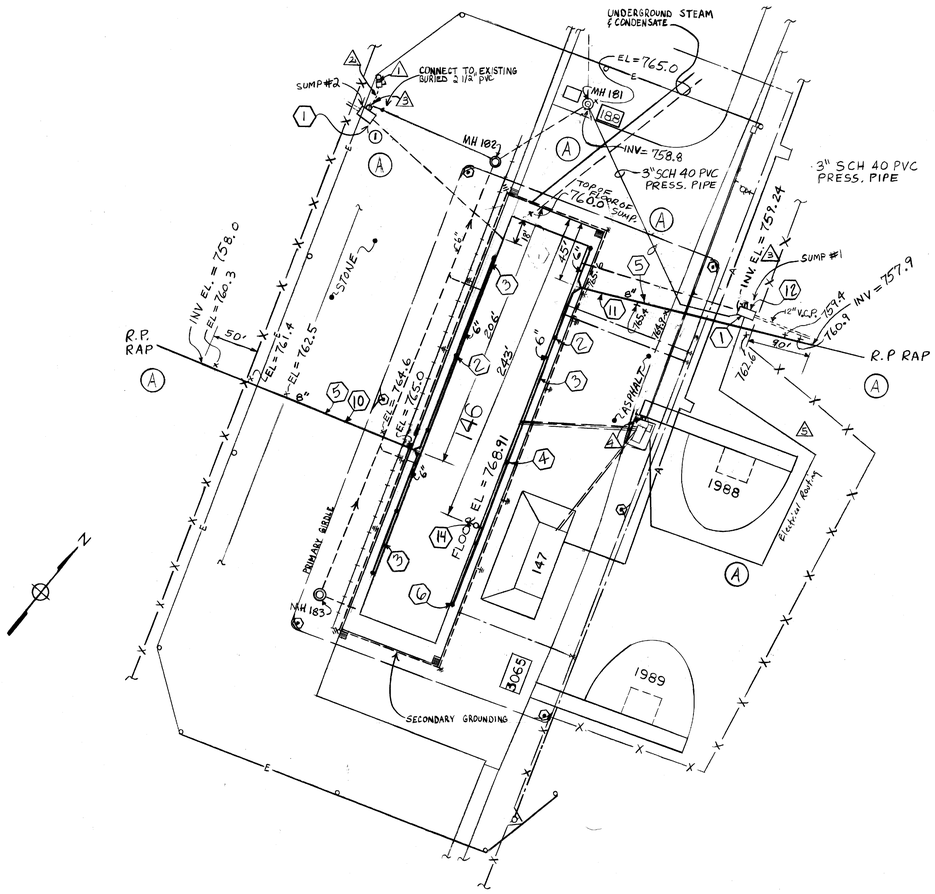

B-146 SITE PLAN
SCALE: 1" = 50'-0"

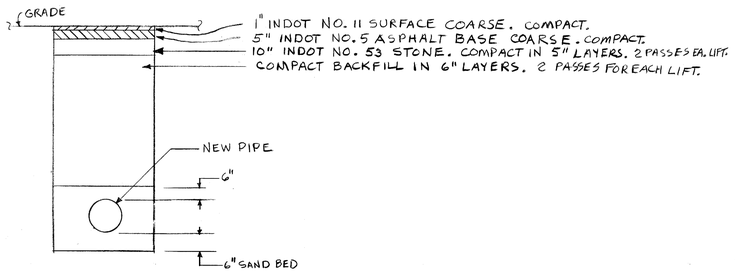

NEW PIPE TRENCH DETAIL (ASPHALT)
N.T.S.

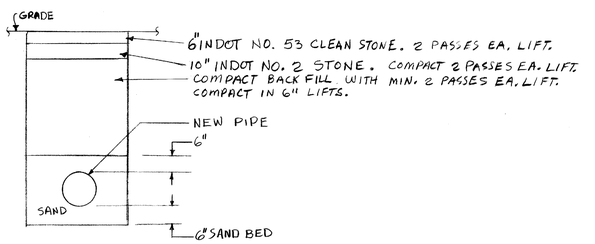

NEW PIPE TRENCH DETAIL (STONE)
N.T.S.

NOTES

1. Existing concrete sump pits.
2. Existing downspouts. TYPICAL.
3. New 6" diameter schedule 40 PVC pipe anchored to the existing reinforced concrete foundation of Building 146. Space anchors in accordance with manufacturers recommendations.
4. Disconnect the existing downspout pipes from the drain (that drains into the existing concrete sumps) on each side of the building under the docks. Connect the downspout pipes to the new 6" diameter PVC pipe under the dock. Plug off the old tees to the drain pipe going to the sumps. TYPICAL.
5. Connect the new 6" diameter schedule 40 PVC pipes to new 8" diameter schedule 40 PVC pipe which drains over the hill. Install 8" PVC pipe approx. 3' deep. See elevations on plan.
6. Reconnect all gutters to downspouts using gutter piping. at the Top of the downspout drop. Remove downspout elbow and horizontal pipe. Reuse all downspout drops.
7. ~~Install manholes to reroute drains from floor drains to the sanitary sewer manholes. Plug the ends of the existing 8" drain pipes with concrete grout (at both ends) going to the concrete sumps and abandon in place.~~
8. ~~Install new 8" diameter PVC sanitary sewer pipe from new manhole to existing Manhole No. 181.~~
9. (A) ~~Replace existing floor drain in the steam pit under the dock. Install a new floor drain with a cleanout and trap. Install new 3" diameter PVC pipe from the floor drain to existing manhole No. 181.~~
10. See trench detail for stone.
11. See trench detail for asphalt.
12. After the two sumps have been cleaned by Gov't, ~~and rinse water removed by Gov't and new sewer drains, manholes, and storm drains are installed. Contractor to install the sump pumps, check valves and piping, and fill the sumps with clean sand, compacted, and broken manhole.~~ (A) Abandon existing sump outlet pipes below grade. Plug each end of each sump outlet pipe. USE CONCRETE GROUT TO SEAL UP PIPES. GROUT SHALL BE NON SHRINK.
13. Install a sump pump in Sump #1 and in Sump #2. See Detail. Using schedule 40 PVC pipe connect the new sump pump in Sump #2 to the existing 2.5 inch diameter PVC pipe under ground which drains to Manhole No. 182. Install a 2.5 diameter schedule 40 PVC pipe 3.5 feet deep from Sump #1 to Manhole No. 181. See trench details.
14. Install 2.5 inch diameter schedule 40 PVC pipe to connect to the new 6 inch diameter down spout drain under the dock. The new 2.5 inch PVC pipe shall extend up through an approx. 5 inch hole in the floor of Building 146 to 18 inches above the floor. The top of the pipe shall be anchored to the concrete wall with a pipe anchor. The foundation wall has a 12 inch by 12 inch opening in it to allow the PVC pipe to extend through to above the floor. The end of the pipe above the floor shall be reduced to 1.5 inch diameter and have a McMaster Carr or equal A adapter with female threads installed on it. The Contractor shall supply a McMaster Carr or equal C coupler and a dust cap to fit the A adapter sized for 1.5 inch diameter pipe.
15. Plug up existing floor drains in B-146 with concrete grout.
16. (A) 8" SCH 40 PVC ROOF DRAIN PIPING SURVEY PERFORMED TO ASSURE PROPER SLOPE FOR DRAINAGE.

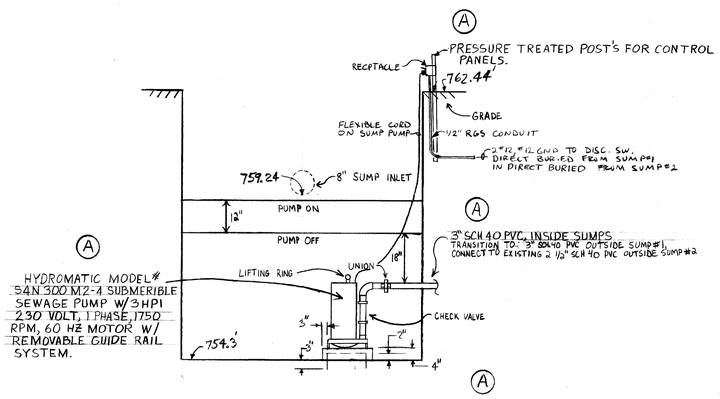

SUMP PUMP DETAIL
SCALE: 1/2" = 1'0"

LEGEND:

- —— X —— PERIMETER FENCE
- —— E —— ELECTRICAL (OVERHEAD)
- —— A —— COMPRESSED AIR
- —— T —— UNDERGROUND TELEPHONE
- +++++++++ RAIL ROAD
- - - - - - - SEWER
- —— - - —— WATER MAIN
- ⓪ MANHOLE
- Ø FIRE HYDRANT
- ⊙ LIGHTNING MAST

SATISFACTORY TO 095 DATE 097 6/16/97	PWO DWG REF / PWO DRAWING NO. 6523	DEPARTMENT OF THE NAVY — NAVAL FACILITIES ENGINEERING COMMAND — NAVAL WEAPONS SUPPORT CENTER, CRANE, INDIANA
SATISFACTORY TO 067 DATE 012 JUN 97	DESIGN TR, LW, GFS; DRAWN TR, LW, GFS; CHECKED; SUPV.	REWORK DRAINS B-146
SATISFACTORY TO 0673 DATE 16 June 97	APPROVED DONE — PUBLIC WORKS OFFICER; DATE	SIZE F; CODE IDENT. NO. 80091; NAVFAC DRAWING NO. 5313480; CONSTR. CONTR. NO. N624
		SCALE AS NOTED; SPEC. NO.; SHEET / OF /

NWSC 1968013-82)

☆U.S. GOVERNMENT PRINTING OFFICE • 1990-744-079

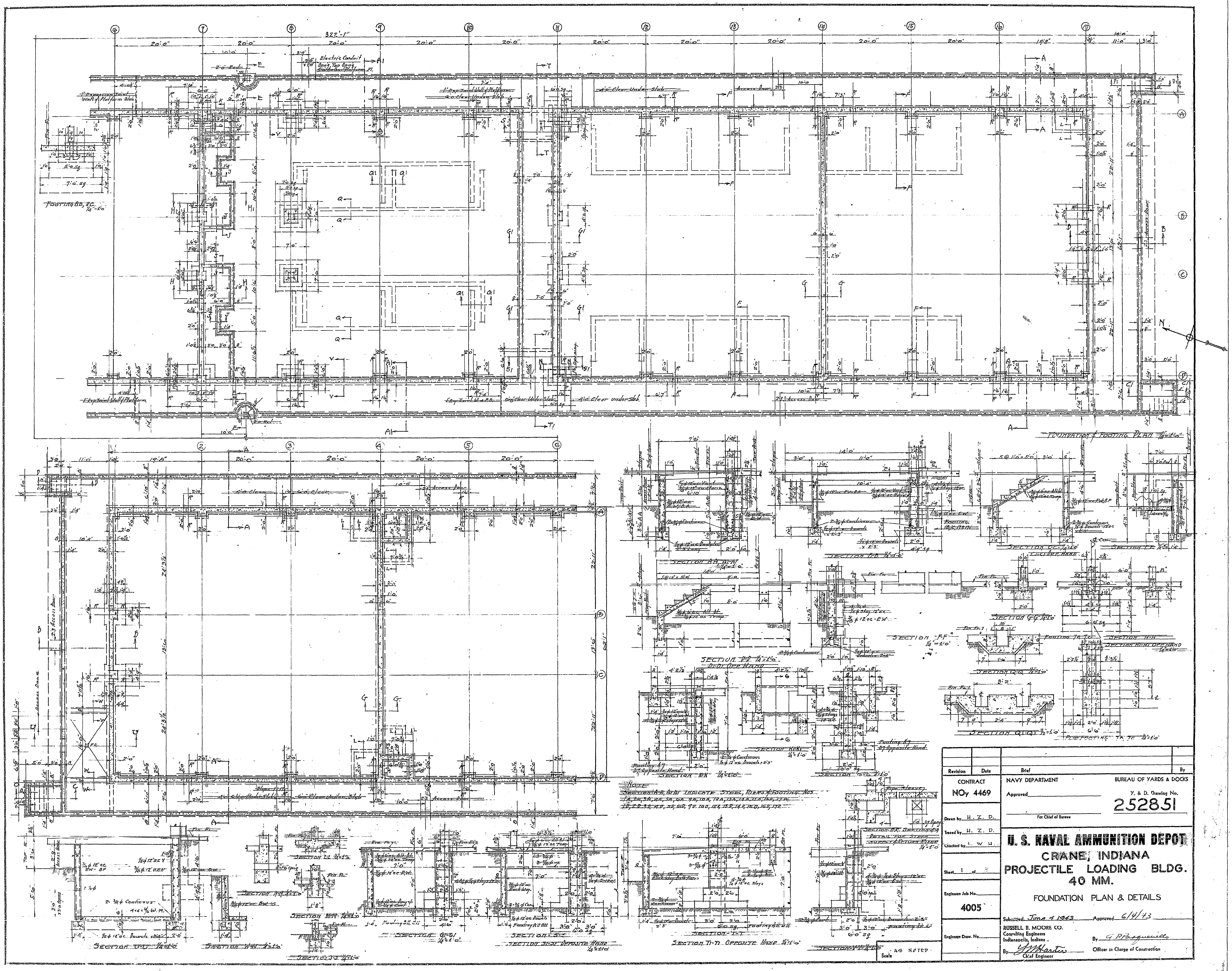

FOUNDATION & FOOTING PLAN 1/8"=1'-0"
SECTION A-A
SECTION B-B
SECTION C-C
SECTION F-F
SECTION G-G
SECTION H-H
SECTION Q-Q
SECTION Q1-Q1 1/2"=1'-0"
PLAN FOOTING 7A, 7C 1/4"=1'-0"
SECTION K-K
SECTION V-V
SECTION W-W
SECTION M-M
SECTION J-J
SECTION S-S
SECTION T-T
SECTION T1-T1 OPPOSITE HAND
Revision
Date
Brief
By
CONTRACT
NOy 4469
NAVY DEPARTMENT
BUREAU OF YARDS & DOCKS
Approved
For Chief of Bureau
Y. & D. Drawing No.
252851
Drawn by H. Z. D.
Traced by H. Z. D.
Checked by L. W. H.
Sheet 1 of
Engineers Job No.
4005
Engineers Draw. No.
U. S. NAVAL AMMUNITION DEPOT
CRANE, INDIANA
PROJECTILE LOADING BLDG.
40 MM.
FOUNDATION PLAN & DETAILS
Submitted June 4 1943
Approved 6/4/43
RUSSELL B. MOORE CO.
Consulting Engineers
Indianapolis, Indiana
By
Chief Engineer
By G. P. Pasquariello
Officer in Charge of Construction
AS NOTED
Scale

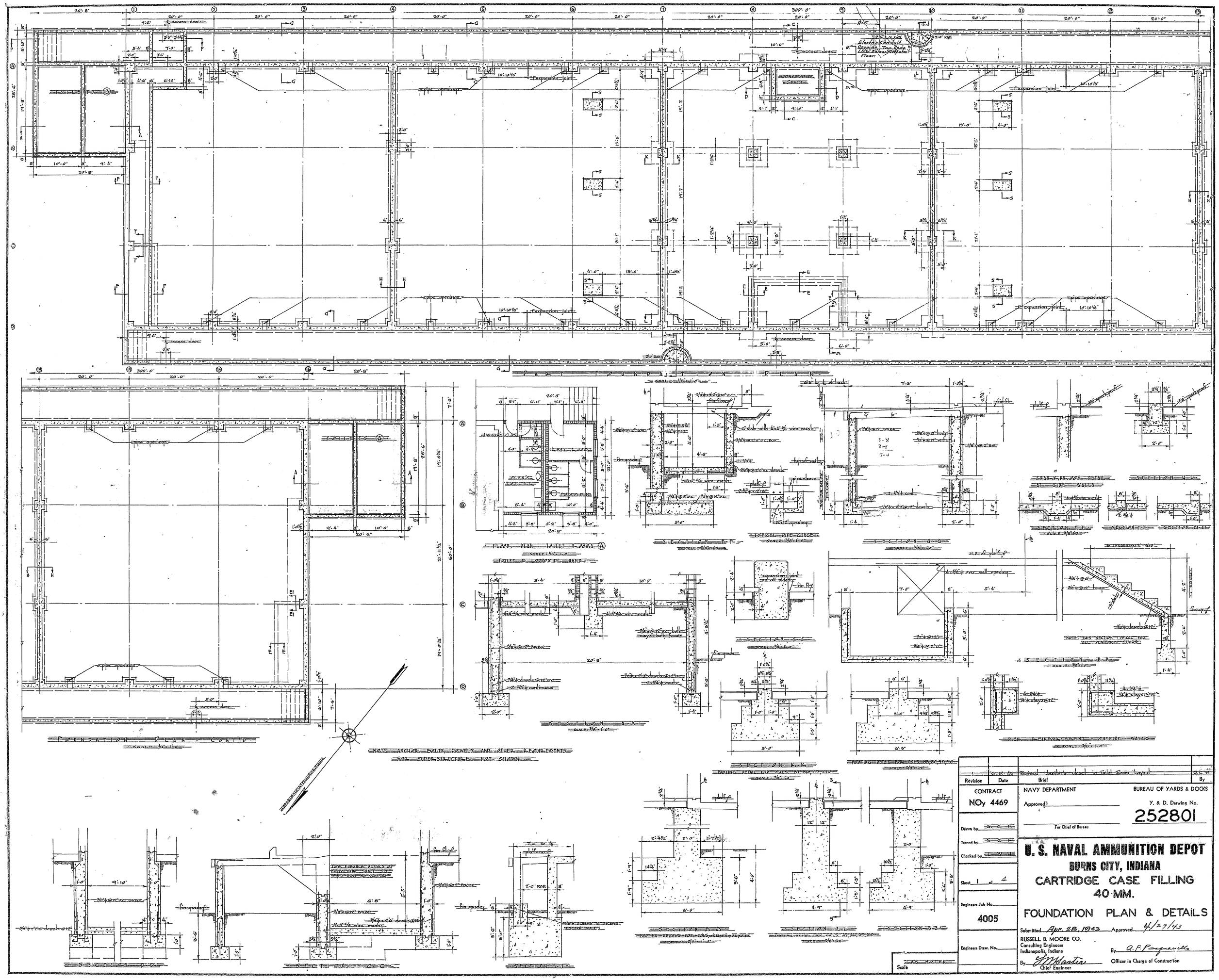

Revision	Date	Brief	By
1	6-12-43	Revised Janitor's closet in Toilet Room Layout	S.G.F.

CONTRACT
NOy 4469

NAVY DEPARTMENT
Approved
For Chief of Bureau

BUREAU OF YARDS & DOCKS
Y. & D. Drawing No.
252801

Drawn by S.G.F.
Traced by S.G.F.
Checked by L.W.H.

Sheet 1 of 4

Engineers Job No.
4005

Engineers Drew. No.

Scale AS NOTED

U. S. NAVAL AMMUNITION DEPOT
BURNS CITY, INDIANA
CARTRIDGE CASE FILLING
40 MM.
FOUNDATION PLAN & DETAILS

Submitted Apr. 28, 1943 Approved 4/29/43

RUSSELL B. MOORE CO.
Consulting Engineers
Indianapolis, Indiana
By J.M. Hartier
Chief Engineer

By A. P. Pasquarello
Officer in Charge of Construction

LTR	REVISIONS DESCRIPTION	PREP'D BY	DATE	APPROVED
A	REVISED AS BUILT - SETTLING TANK SHIFTED APPROXIMATELY 30 FT. TO THE WEST.	Allen O. Harris	11/1/76	REJ
B	6" C.I. DRAIN LINE MOVED TO OUTSIDE WALLS OF TUNNEL.	Allen O. Harris	11/1/76	REJ
C	DEVIATION ON USE OF TYPICAL BRACKET NOTED.	Allen O. Harris	11/1/76	REJ

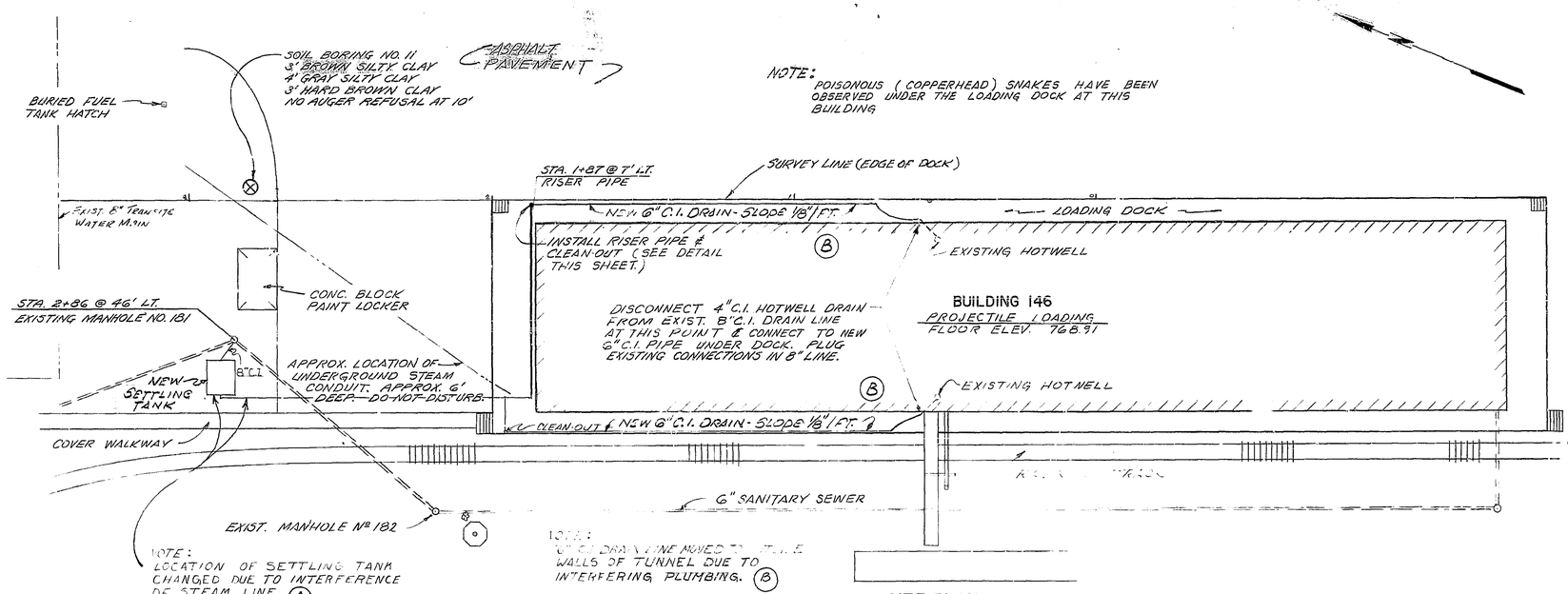

SITE PLAN
1" = 20'

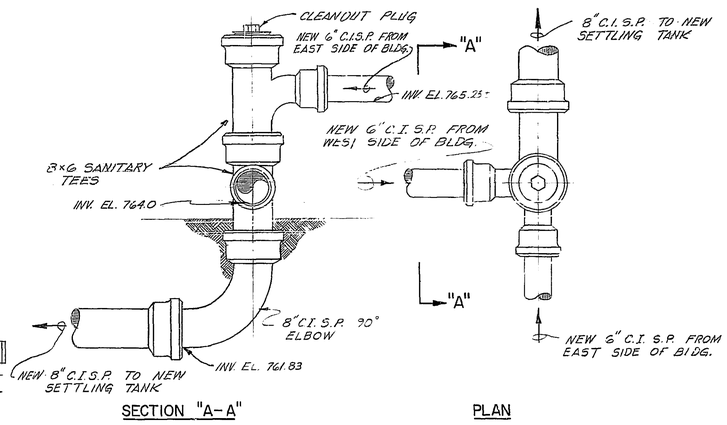

SECTION "A-A" PLAN

RISER PIPE DETAILS
NOT TO SCALE

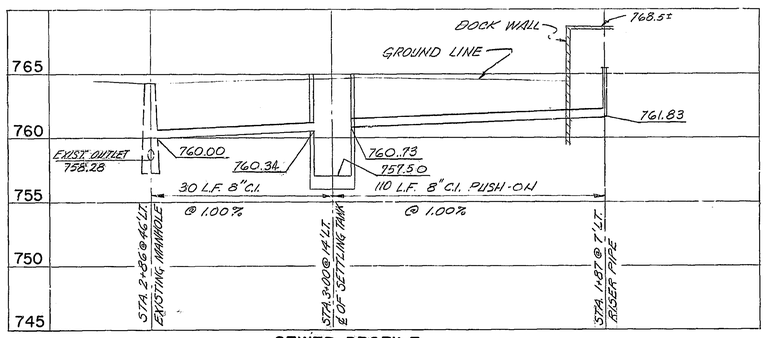

SEWER PROFILE
SCALE HORIZ. NOT TO SCALE
1" = 5'-0" VERT.

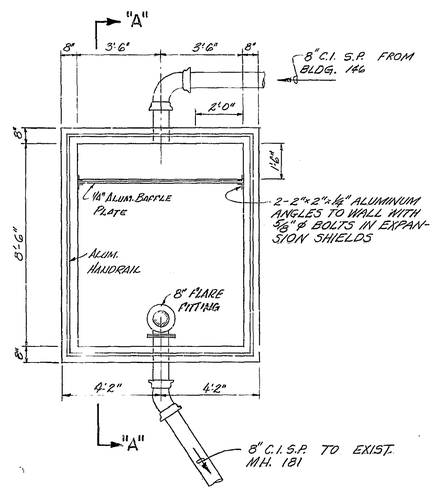

NEW SETTLING TANK PLAN
3/8" = 1'-0"

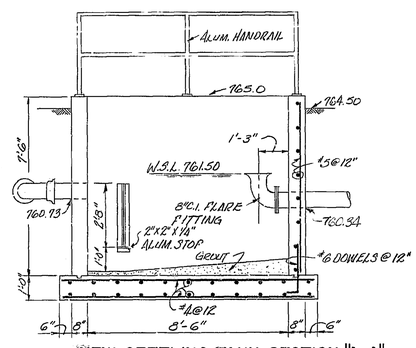

NEW SETTLING TANK SECTION "A-A"
3/8" = 1'-0"

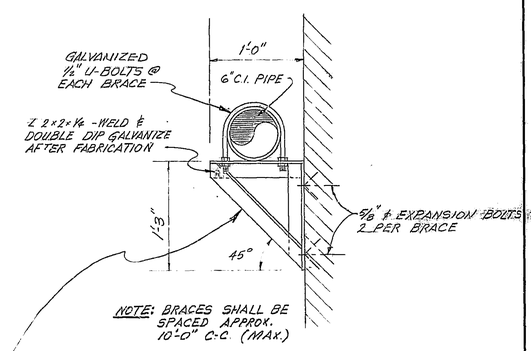

NOTE: BRACES SHALL BE SPACED APPROX. 10'-0" C-C. (MAX.)

TYPICAL WALL BRACKET DETAIL
1 1/2" = 1'-0"

NOTE: CEILING MOUNTED CLEVIS TYPE HANGERS USED AT VARIOUS LOCATIONS. (C)

TBM: FLOOR AT LARGE DOCK AT NORTH END OF BLDG. 146 ELEV. 768.90

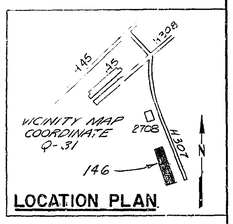

LOCATION PLAN

1" = 20'
1 1/2" = 1'-0"
3/8" = 1'-0"

CHECK GRAPHIC SCALES BEFORE USING

P.W. 3820

HENRY B. STEEG & ASSOCIATES, INC. ENGINEERS INDIANAPOLIS, INDIANA

DEPARTMENT OF THE NAVY NAVAL FACILITIES ENGINEERING COMMAND
NORTHERN DIVISION
NAVAL BASE PHILADELPHIA, PA.

NAVAL AMMUNITION DEPOT CRANE, INDIANA
INDUSTRIAL WASTE TREATMENT FACILITIES
BUILDING 146
SETTLING TANK & SEWER CONNECTION

DES. K.K./R.L.F. CK. J.D.C.
DR. K.K. CK. J.D.C.
NORDIV
HD Civil J. Fisher E.I.C.
HD DIR. O.R. Mason
APPROVED DATE
OFFICER IN CHARGE
APPROVED DATE 7/1/74
NORDIV FOR COMMANDER NAVFAC

SIZE F | CODE IDENT. NO. 80091 | NAVFAC DRAWING NO. 2009992
CONSTR. CONTR. NO. N62472 73 C 0093
SCALE: AS SHOWN | SPEC. 04-73-0093 | SHEET 10 OF 29

L. DANIEL CLICK REGISTERED No. 14358 STATE OF INDIANA PROFESSIONAL ENGINEER

SATISFACTORY TO: DATE

J.O. 54C3B099

APPENDIX E

SUPPLEMENTAL CONTRACTOR SPECIFICATIONS

SUPPLEMENTAL SPECIFICATIONS
INTERIM MEASURES WORK PLAN
SWMU 16 – CAST HIGH EXPLOSIVES FILL/BUILDING 146 INCINERATOR
NSA CRANE
CRANE, INDIANA

Contractor Requirements

The Contractor will be responsible for performing the following work:

1. Attend pre-Interim Measures Work Plan (IMWP) implementation conference.
2. Submit documentation in accordance with the "Basic Contract" 30 days prior to beginning work to allow the Navy sufficient time to review and comment. The Contractor will then incorporate Navy comments into the documents. These documents include the following:
    - Work Plan
        - Excavation and Handling Plan
        - Hazardous/Waste Management Plan
        - Environmental Protection Plan
        - Erosion and Sediment Control Plan
        - Stormwater Pollution Prevention Plan
        - Transportation and Disposal Plan
    - Site Specific Health and Safety Plan (SSHSP) and Activity Hazard Analysis
    - Project Quality Control Plan (QCP)
3. Acquire Facility-specific permits, including but not limited to the following:
    - Safety & Building Availability Permit (ESO 8020/11)
    - Digging Permit (NWSCC 11000/3)
    - Flame Tool/Hot Work Permit (NWSCC 11320)
4. Mobilize required equipment and personnel to excavate the indicated contaminated soil.
5. Construct and maintain the required erosion and sediment control devices for the duration of the project.
6. Construct required support facilities including, but not limited to, dewatering pad, decontamination pad(s), and material storage areas.
7. Excavate, transport, and dispose metals-, petroleum hydrocarbon-, Volatile Organic Compound (VOC) [including trichloroethene (TCE)]-contaminated soils.
8. Restore surface soil excavation area to meet surrounding grades.
9. Remove all temporary support facilities, leaving perimeter erosion and sediment controls in place until revegetation is complete and as instructed by the Navy.
10. Restore areas used for temporary support facilities (regrading and revegetation).
11. Demobilize equipment and personnel.

In addition to the Quality Control (QC) submittals and Safety and Health submittals required by the NSA Crane Contractor's Operations Manual and the Basic Contract, the Contractor shall submit the following to the Navy:

- Fieldwork reports in accordance with Part 6.4 Section C of the Basic Contract.
- Contractor 29 Code of Federal Regulation (CFR) 1910.120 Employee Training Certificates for all Contractor employees scheduled to be on-site.
- Erosion and Sediment (E&S) Control installation and inspection logs.
- Copies of NSA Crane specific permits.
- Certification and sampling results for backfill material and topsoil. A minimum of one sample per borrow source is required.
- Waste transportation subcontractor name, address, contact name, telephone number, and United States Department of Transportation (USDOT) number.

- Hazardous waste disposal facility name, address, contact name, telephone number, and United States Environmental Protection Agency (USEPA) and State identification numbers, if required.
- Solid waste disposal facility name, address, contact name, telephone number, USEPA and State identification numbers.
- Copies of Treatment/Disposal Facility Permits.
- Waste profiles, complete waste characterization results, and any waste disposal facility pre-approval or approval documentation.
- Work Site Decontamination Certificates (verification that all vehicles equipment and containers were properly decontaminated prior to leaving the work site).
- Disposal Site Decontamination Certificates (verification that vehicles and containers were decontaminated prior to leaving the disposal facility).
- Shipment Manifests (manifests and other documents required to ship waste).
- Delivery Certificates (verification that waste was received at identified waste disposal facility).
- Treatment and Disposal Certificates (verification that waste was successfully received and disposed).
- Decontamination Log.

The Contractor-provided information will be compiled in the project Contract Task Order (CTO) Closure Report to be prepared by the Navy.

Supplemental Specifications

In addition to the performance specifications presented in the NSA Crane Contractor's Operation Manual and in the Basic Contract, the Contractor shall perform the activities in accordance with the supplemental specifications provided below.

General Requirements

The Contractor is advised that this project is subject to Federal, State, and local regulatory agency inspections and review for compliance with environmental laws and regulations. The Contractor shall fully cooperate with any representative from any Federal, State, or local regulatory agency who may visit the job site and shall provide immediate notification to the Officer in Charge of Construction (OICC), who shall accompany them on any subsequent site inspections. The Contractor shall complete, maintain, and make available to the OICC, Facility, or regulatory agency personnel all documentation relating to environmental compliance under applicable Federal, State, and local laws and regulations. The Contractor shall immediately notify the OICC if a Notice of Violation (NOV), Notice of Deficiency (NOD), or similar regulatory notice is issued to the Contractor.

The Contractor shall be responsible for all damages to persons or property resulting from Contractor fault or negligence as well as for the payment of any civil fines or penalties which may be assessed by any Federal, State, or local regulatory agency as a result of the Contractor's or any subcontractor's violation of an applicable Federal, State, or local environmental law or regulation. Should an NOV, Notice of Noncompliance, NOD, or similar regulatory agency notice be issued to the Government or Facility owner/operator on account of the actions or inactions of the Contractor or one if its subcontractors in the performance of work under this contract, the Contractor shall fully cooperate with the Government in defending against regulatory assessment of any civil fines or penalties arising out of such actions or inactions.

After approval of the Contractor's Work Plan and before commencement of the work, the Contractor shall submit to the OICC the required certifications. As requested by the OICC, the Navy Representative for this project may review and provide surveillance for the OICC to determine if Contractor's submittals comply with the contract requirements.

The Contractor shall be required to commence work on the approved Contractor's Work Plan within 5-calendar days after receiving the notice to proceed and to prosecute the work diligently after receiving the notice to proceed.

NSA Crane will remain in operation during the entire construction period. The Contractor shall schedule the work as to cause the least amount of interference with the Facility. Work schedules shall be subject to the approval of the OICC. Permission to interrupt Facility road services shall be requested in writing a minimum of 15-calendar days prior to the desired date of interruption. The OICC shall be notified 48 hours prior to starting excavation activities.

Regular work hours shall consist of an 8½ hour daily period established by the OICC, Monday through Friday, excluding Government holidays. The Contractor should assume an 8½ hour daily period. Working outside of the 8½ hour daily period will require approval by the OICC. Work hours shall be established during the pre-IMWP implementation conference.

On-site storage, laydown, material handling, and decontamination activities shall be limited to areas approved by the OICC.

During the progress of construction activities, the work area and adjacent areas shall be kept clean and free of rubbish, surplus materials, and unneeded construction equipment. No material or debris shall be allowed to flow or wash into watercourses, ditches, gutters, drains, or pipes. Upon completion of the work, the Contractor shall sweep paved areas and rake clean landscaped areas, and remove waste and surplus materials, rubbish, and construction facilities from the site.

Work Restrictions

Contractor personnel employed at the Facility shall become familiar with and obey Facility regulations and keep within the limits of the work and avenues of ingress and egress as directed. Personnel shall not enter any restricted areas unless required to do so and until cleared for such entry. The Contractor's equipment shall be clearly marked for identification.

The Contractor shall indicate on the construction schedule any activity that could potentially interrupt Facility operations. The Contractor shall notify the OICC in writing 15-calendar days prior to the required interruption.

Facilities and Services

Provide utility permits in accordance with Part 4.13 Section C of the Basic Contract.

NSA Crane shall make all reasonably required amounts of utilities available to the Contractor from existing outlets and supplies, as indicated. The amount of each utility service consumed shall be charged to or paid for by the Contractor at the prevailing rates charged to NSA Crane or shall be furnished at no charge as indicated. The Contractor shall carefully conserve any utilities furnished without charge.

The point at which NSA Crane will deliver such utilities or services and the quantity available will be identified by NSA Crane.

The Contractor, at its expense and in a workman-like manner satisfactory to the Contracting Officer, shall install and maintain all necessary temporary connections and distribution lines, and all meters required to measure the amount of each utility used for the purpose of determining charges. Before final acceptance of the work by the Government, the Contractor shall remove all the temporary connections, distribution lines, meters, and associated paraphernalia.

Electric – Electrical power available, primary voltage is [2400 volt 3 phase, 3 wire, 60 cycle AC. Secondary voltages may be 120/208 or 120/240 volts.] Final taps and tie-ins to the NSA Crane utility grid will be made by NSA Crane electric shop.

Potable Water – Potable water is not available. Contractor shall provide potable water for use by all personnel.

Water – A reasonable quantity of water is available at [Building [ ] fire station] at no charge. Provide backflow prevention devices on connections to potable water supplies. Under no circumstances will taps to NSA Crane fire hydrants be allowed for obtaining water.

Telephone – Telephone service is not available.

Sanitary Facilities - Provide temporary sanitary facilities for use by all personnel in accordance with Part 3.10 Section C of the Basic Contract.

Municipal Waste – Municipal waste storage and disposal is not available.

Sewer – Water resulting from personnel and equipment decontamination, excavation dewatering, and water from materials handling pad may be discharged to the NSA Crane sanitary sewer system, subject to approval of the NSA Crane based on characterization samples of water to be discharged.

Site Personnel Qualifications

Site Superintendent - The Contractor shall designate a Site Superintendent who shall have responsibility and authority to direct work performed. The Site Superintendent shall be responsible for the management and execution of all site activities in accordance with the IMWP, approved Contractor's Work Plan, and all Federal, State, and local laws and regulations. The Site Superintendent may not act in the dual role as the Project Quality Control Manager or Site Health and Safety Specialist (SHSS). The Site Superintendent shall have, as a minimum, the following qualifications:

- A minimum of 6-years site superintendent experience.
- Familiar with the requirements of the U.S. Army Corps of Engineers Safety - Safety and Health Requirements (EM 385-1-1).
- Experience in the areas of hazard identification and safety compliance.

Project Quality Control Manager - The Contractor shall designate a Project QC Manager who shall assist and represent the QC Program Manager in continued implementation and enforcement of the approved Project QC Plan. The QC Program Manager or Project QC Manager shall be physically present at the project site whenever work is in progress. The Project QC Manager may be dual hatted with the SHSS if qualified. The Project QC Manager shall have, as a minimum, the following qualifications:

- A minimum 2-years experience as a Project QC Manager.
- A minimum of 10-years combined experience in the following positions: project superintendent, QC manager, project manager, project engineer or construction manager on similar size and type of construction contracts which included the major trades that are part of this IM.
- Alternatively, the above 10-year combined experience requirement may be satisfied by providing a professional engineer registered in the State of Indiana having at least 2-years experience as a Project QC Manager.
- Familiar with the requirements of the U.S. Army Corps of Engineers Safety - Safety and Health Requirements (EM 385-1-1).
- Experience in the areas of hazard identification and safety compliance.

Site Health and Safety Specialist - The Contractor shall designate a Site Health and Safety Specialist (SHSS) who shall assist and represent the Contractor's Health and Safety (H&S) Manager in continued implementation and enforcement of the approved Site Health and Safety Plan (SSHSP). The SHSS shall have the on-site responsibility and authority to modify and stop work, or remove personnel from the site if working conditions change that may affect on-site and off-site health and safety. The SHSS shall be physically present at the project site at all times. The SHSS may be dual hatted with the Project QC Manager. The SHSS shall have, as a minimum, the following qualifications:

- A minimum of 5-years safety work on similar projects.
- 30-hour OSHA construction safety class or equivalent within the last 5-years.
- An average of at least 24 hours of formal safety training each year for the last 5-years.
- Competent person status for at least the following:
    - excavation,
    - health hazard recognition, evaluation and control of chemical, physical and biological agents, and
    - personal protective equipment and clothing to include selection, use and maintenance.
- First aid and cardiopulmonary resuscitation qualified.

Quality Control

Approval of the QC Plan is required prior to the start of construction. The OICC reserves the right to require changes in the QC Plan and operations as necessary to ensure the specified quality of work. The Contracting Officer reserves the right to interview the QC Manager at any time in order to verify his/her submitted qualifications.

The OICC shall be notified, in writing, of any proposed changes to the QC Plan, at a minimum of 7-calendar days prior to the implementation of the proposed change. Proposed changes must be approved by the OICC.

Combined Contractor Production Report/Contractor Quality Control Report (CPR/CQCR) is required for each day that work is performed. CPR/CQCRs are to be prepared, signed, and dated by the Project QC Manager.

Safety and Occupational Health Requirements

The SHSS and Contractor representatives who have a responsibility or significant role in accident prevention shall attend the pre-IMWP implementation conference. The purpose of the conference is for the Contractor and the OICC to become acquainted and explain the functions and operating procedures of their respective organizations and to reach mutual understanding relative to the administration of the overall project before the initiation of work. The Contractor shall discuss the details of the work identified in the approved Contractor's Work Plan and discuss which construction phases will require significant or additional activity hazard analysis. In addition, a schedule for the preparation, submittal, review, and acceptance of additional hazard analysis shall be established to preclude project delays. Lastly, deficiencies in the submitted accident prevention report will be brought to the attention of the Contractor at the conference. The Contractor shall revise the plan to correct deficiencies and resubmit the plan for acceptance.

New employees (prime or subcontractor) will be informed of specific site hazards before they begin work. Documentation of this orientation shall be kept on file at the project site.

If unforeseen materials hazardous to human health are encountered during operations, that portion of the work shall be stopped and the OICC shall be notified immediately. Within 14-days, the Navy will determine if the material is hazardous. If the material is not hazardous or poses no danger, the OICC will direct the Contractor to proceed without change. If the material is determined to be hazardous or to pose danger, and handling of the material is necessary to accomplish the work, the Contracting Officer will issue modifications to the proposed work.

Equipment shall be operated by designated qualified operators. Proof of qualifications shall be kept on the project site for review. Manufacturer's specifications or owner's manual for the equipment shall be on site and reviewed for additional safety precautions or requirements. Such additional safety precautions or requirements shall be incorporated into the activity hazard analysis. Mechanized equipment shall be inspected in accordance with manufacturer's recommendations for safe operations by a competent person prior to being placed into use. Daily checks or tests shall be conducted and documented on mechanized equipment by designated competent persons.

The competent person for excavations performed as a result of contract work shall be on-site when excavation work is being performed, and shall inspect and document the excavations daily prior to entry by workers. The competent person must evaluate all hazards, including atmospheric, that may be associated with the work, and shall have the resources necessary to correct hazards promptly.

Environmental Controls

An E&S Control Plan is included in the IMWP. The E&S Control Plan describes the location and description of all erosion and sediment control measures, a sequence of construction to be followed, graphic details of all E&S control measures to be used, and an approval sign-off block containing the names of the Facility and Contractor contacts, whose signatures indicate plan acceptance/approval.

The Contractor shall strictly follow the E&S Control Plan and maintain all measures used during construction. Modifications to the E&S Control Plan shall be submitted to the OICC and the Indiana Department of Environmental Management (IDEM) for approval. No modifications to the E&S Control Plan will be allowed until these changes have been approved by the OICC and IDEM and three copies of the approved modifications have been submitted to the OICC and one copy of the approved modifications have been submitted to IDEM.

Transportation and Disposal of Contaminated Material

The Contractor shall be solely responsible for complying with all Federal, State, and local requirements for decontamination of vehicles, equipment, and containers and shall bear all responsibility and cost for any noncompliance. In addition to these requirements, the Contractor shall perform the following:

- Visually inspect all vehicles, equipment, and containers leaving the work site for proper decontamination.
- Prepare and maintain a written decontamination log.

The Contractor shall be solely responsible for complying with all Federal, State, and local requirements for transporting contaminated materials through the applicable jurisdictions and shall bear all responsibility and cost for any noncompliance. In addition to these requirements, the Contractor shall perform the following:

- Inspect and document all vehicles and containers for proper operation and covering.
- Inspect all vehicles and containers for proper markings, manifest documents, and other requirements for waste shipment.

All contaminated materials removed from the site shall be disposed in a treatment/disposal facility permitted to accept such material.

The Contractor shall properly dispose of Investigation-Derived Waste (IDW), personnel protective equipment, and miscellaneous wastes associated with implementation of the IMWP, including sampling and analysis that are generated by the Navy representatives.