N60478.AR.000198
NWS EARLE
5090.3a

R-51-4-2-5

FINAL
SITE CHARACTERIZATION REPORT UNDERGROUND STORAGE TANK INVESTIGATION AT BUILDING C-17

NAVAL WEAPONS STATION (NWS) EARLE
COLTS NECK, NEW JERSEY

PREPARED AND SUBMITTED BY:
HALLIBURTON NUS ENVIRONMENTAL CORPORATION
999 WEST VALLEY ROAD
WAYNE, PENNSYLVANIA 19087

COMPREHENSIVE LONG-TERM ENVIRONMENTAL ACTION NAVY (CLEAN) PROGRAM

CONTRACT NUMBER N62472-90-D-1298

CONTRACT TASK ORDER 0031

MAY 1992

HALLIBURTON NUS
Environmental Corporation

ENSR™

Donohue ENGINEERS ARCHITECTS SCIENTISTS

R-51-4-2-5

SITE CHARACTERIZATION REPORT
UNDERGROUND STORAGE TANK INVESTIGATION
AT BUILDING C-17

COMPREHENSIVE LONG-TERM
ENVIRONMENTAL ACTION NAVY (CLEAN) PROGRAM

NAVAL WEAPONS STATION (NWS) EARLE
COLTS NECK, NEW JERSEY

SUBMITTED TO:
NORTHERN DIVISION, ENVIRONMENTAL BRANCH, CODE 14
NAVAL FACILITIES ENGINEERING COMMAND
BUILDING 77-L, U.S. NAVAL BASE
PHILADELPHIA, PENNSYLVANIA 19112-5094

PREPARED AND SUBMITTED BY:
HALLIBURTON NUS ENVIRONMENTAL CORPORATION
999 WEST VALLEY ROAD
WAYNE, PENNSYLVANIA 19087

CONTRACT NUMBER N62472-90-D-1298

CONTRACT TASK ORDER 0031

MAY 1992

PREPARED BY:

Jill Hartnell

JILL HARTNELL, CPG
GEOLOGIST

APPROVED FOR SUBMISSION BY:

John Trepanowski

JOHN TREPANOWSKI, P.E.
PROGRAM MANAGER

TABLE OF CONTENTS

SECTION		PAGE
1.0	**INTRODUCTION AND SCOPE OF WORK**	**1-1**
2.0	**SITE ASSESSMENT AND SAMPLING**	**2-1**
2.1	FIELD TESTS	2-4
2.2	SCREENING EVALUATION	2-7
2.3	SOIL SAMPLING PROTOCOL AND ANALYSES	2-7
2.4	GROUNDWATER	2-10
2.4.1	Monitoring Well Installation and Development	2-10
2.4.2	Groundwater Sampling Protocol and Analyses	2-12
3.0	**RESULTS OF SAMPLE ANALYSES**	**3-1**
3.1	SOIL SAMPLES	3-1
3.1.1	Diesel Delivery Line	3-1
3.1.2	Unleaded Gasoline Delivery Line	3-10
3.2	GROUNDWATER SAMPLES	3-11
4.0	**SITE CHARACTERIZATION**	**4-1**
4.1	GENERAL PARAMETERS	4-1
4.1.1	Physical Geography	4-1
4.1.2	Climate	4-1
4.1.3	Surface Drainage	4-1
4.1.4	Population and Land Use	4-1
4.2	POTENTIAL SUBSURFACE RECEPTORS	4-2
4.2.1	Wells	4-2
4.2.2	Subsurface Utilities	4-2
4.3	SOILS	4-2
4.4	GEOLOGY	4-3
4.5	HYDROGEOLOGY	4-7
4.5.1	Regional Hydrogeology	4-7
4.5.2	Local Hydrogeology	4-10
5.0	**SUMMARY AND RECOMMENDATIONS**	**5-1**
DICAR SUMMARY		

TABLE OF CONTENTS

APPENDICES

A	NEW JERSEY DEPARTMENT OF ENVIRONMENTAL PROTECTION AND ENERGY UNDERGROUND STORAGE TANK REGISTRATION QUESTIONNAIRE	A-1
B	UNDERGROUND STORAGE TANK SYSTEM PROPOSED SAMPLING PLAN AND CLOSURE APPROVAL FORM	B-1
C	HALLIBURTON NUS HEALTH AND SAFETY PLAN FOR SITE ASSESSMENT ACTIVITIES	C-1
D	SAMPLING LOG SHEETS	D-1
E	DATA PACKAGES	E-1
F	GROUNDWATER MONITORING WELL PERMIT AND BORING LOG	F-1
G	SURVEY REPORT AND LOCATION PLAN FOR MW-1	G-1
H	NEW JERSEY DEPARTMENT OF ENVIRONMENTAL PROTECTION AND ENERGY WELL SUMMARY	H-1
I	SOIL SURVEY INFORMATION	I-1

FIGURES

NUMBER		PAGE
1	Regional Location Map	1-2
2	Detailed Site Map	1-3
3	Department of Public Works As-Built Diagram	2-2
4	HALLIBURTON NUS As-Built Diagram	2-3
5	Field Test Location Map	2-5
6	Soil Sampling Location Map	2-8
7	Subsurface Hazards Map	2-11
8a.	Volatile Organic Compounds, Including MTBE and TBA, Detected in Soil and Groundwater Samples	3-2
8b.	BTEX and Non-BTEX Volatile Organic Compounds Detected in Soil and Groundwater Samples	3-4
9	Tentatively Identified Volatile Organic Compounds Detected in Soil and Groundwater Samples	3-5
10	Total Petroleum Hydrocarbons and Lead Detected in Soil Samples	3-7
11	Semivolatile and Tentatively Identified Semivolatile Organic Compounds Detected in Groundwater Samples	3-12
12	Structural Contour Map for the Vincentown Aquifer	4-5
13	Generalized Hydrogeologic Cross-Section for Monmouth County	4-8

TABLES

NUMBER		PAGE
1	Results of Field Test Methods	2-6
2	Sampling Information	2-9
3	Volatile Organic Compounds Detected in Soil Samples and Associated Blanks	3-3
4	Tentatively Identified Volatile Organic Compounds Detected in Soil Samples and Associated Blanks	3-6
5	Total Petroleum Hydrocarbons and Lead Detected in Soil Samples and Associated Blanks	3-8
6	Volatile and Semivolatile Organic Compounds, Including Tentatively Identified Compounds, Detected in Groundwater Samples and Associated Blanks	3-13
7	Geologic and Hydrogeologic Units of the Coastal Plain of New Jersey	4-4

1.0 INTRODUCTION AND SCOPE OF WORK

Naval Weapons Station (NWS) Earle is located south of Colts Neck in Monmouth County, New Jersey (Figure 1, page 1-2). On May 14, 1991, the fuel delivery lines connecting a 12,000-gallon diesel underground storage tank (UST) and a 10,000-gallon unleaded gasoline UST to the dispensers located near NWS Earle Building C-17 failed tightness tests (Figure 2, page 1-3). The incident was reported to the New Jersey Department of Environmental Protection and Energy (NJ DEPE) and was assigned Case No. 91-5-15-0941-14. The Navy decided to replace both delivery lines, which were covered under NJ DEPE UST system registration no. 0151003 (see Appendix A), with double-wall fiberglass-reinforced plastic piping. A closure permit application and proposed sampling plan were filed with NJ DEPE by the Navy to cover the removal of 200 linear feet of gasoline piping (see Appendix B); the closure application was approved and TMS No. C-91-3703 was assigned. HALLIBURTON NUS Environmental Corporation was contracted by the United States Navy Northern Division, under CLEAN Contract No. N62473-90-D-1298, Contract Task Order 0031, to

- Witness the excavation of contaminated soil during the removal of the two delivery lines near Building C-17.
- Perform a Site Assessment following the pipe removal.
- Prepare a Site Characterization.
- Prepare a Closure Plan Implementation Summary.
- Prepare a Discharge Investigation and Corrective Action Report (DICAR) Summary.

The objective of this report is to document the procedures followed during the Site Assessment, summarize the results of the sampling analyses, and characterize the site.

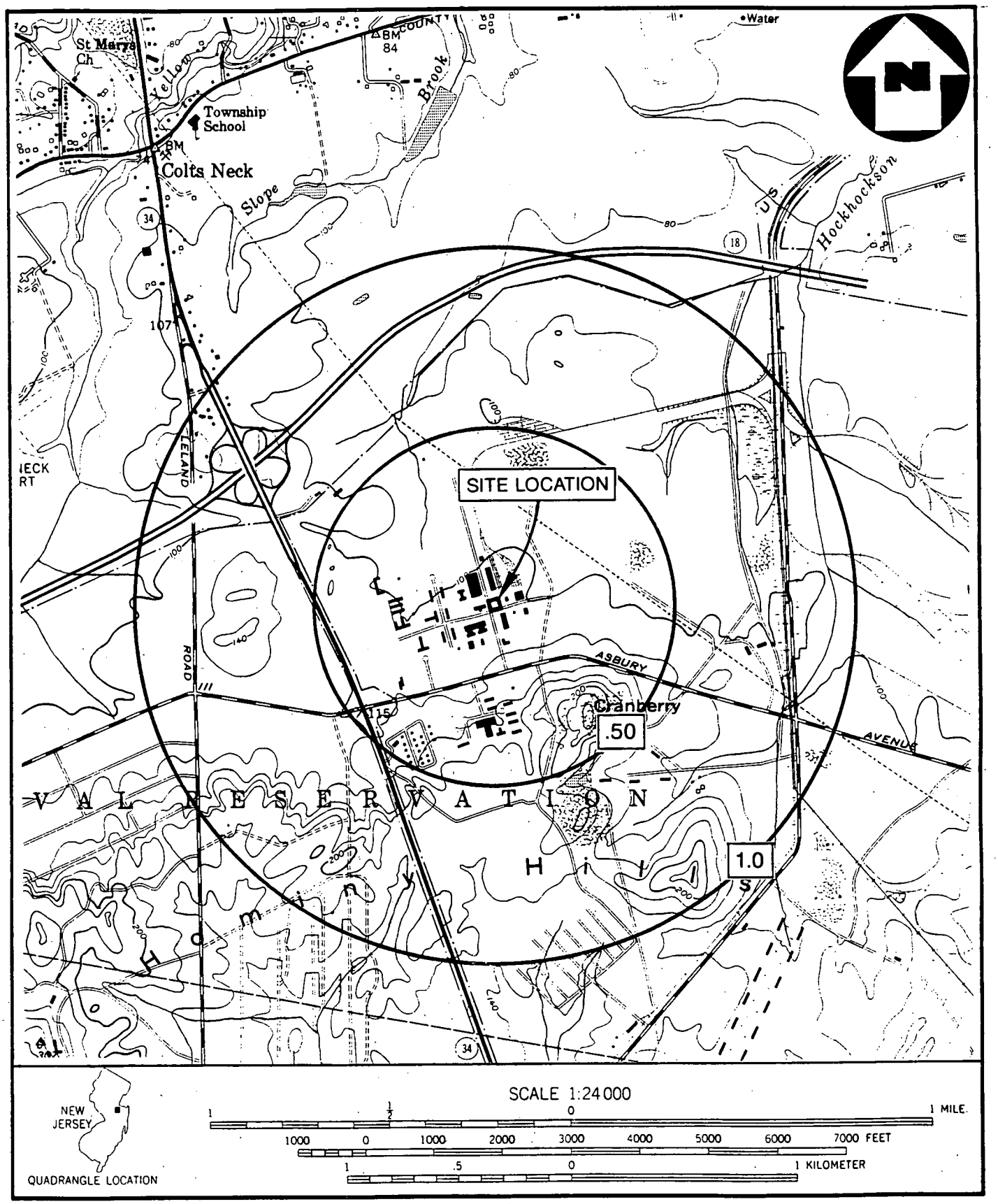

SOURCE: (7.5 MINUTE SERIES) U.S.G.S.

FIGURE: 1

REGIONAL LOCATION MAP

UST INVESTIGATION AT BUILDING C-17, NWS EARLE

(SCALE 1:24000)

HALLIBURTON NUS
Environmental Corporation

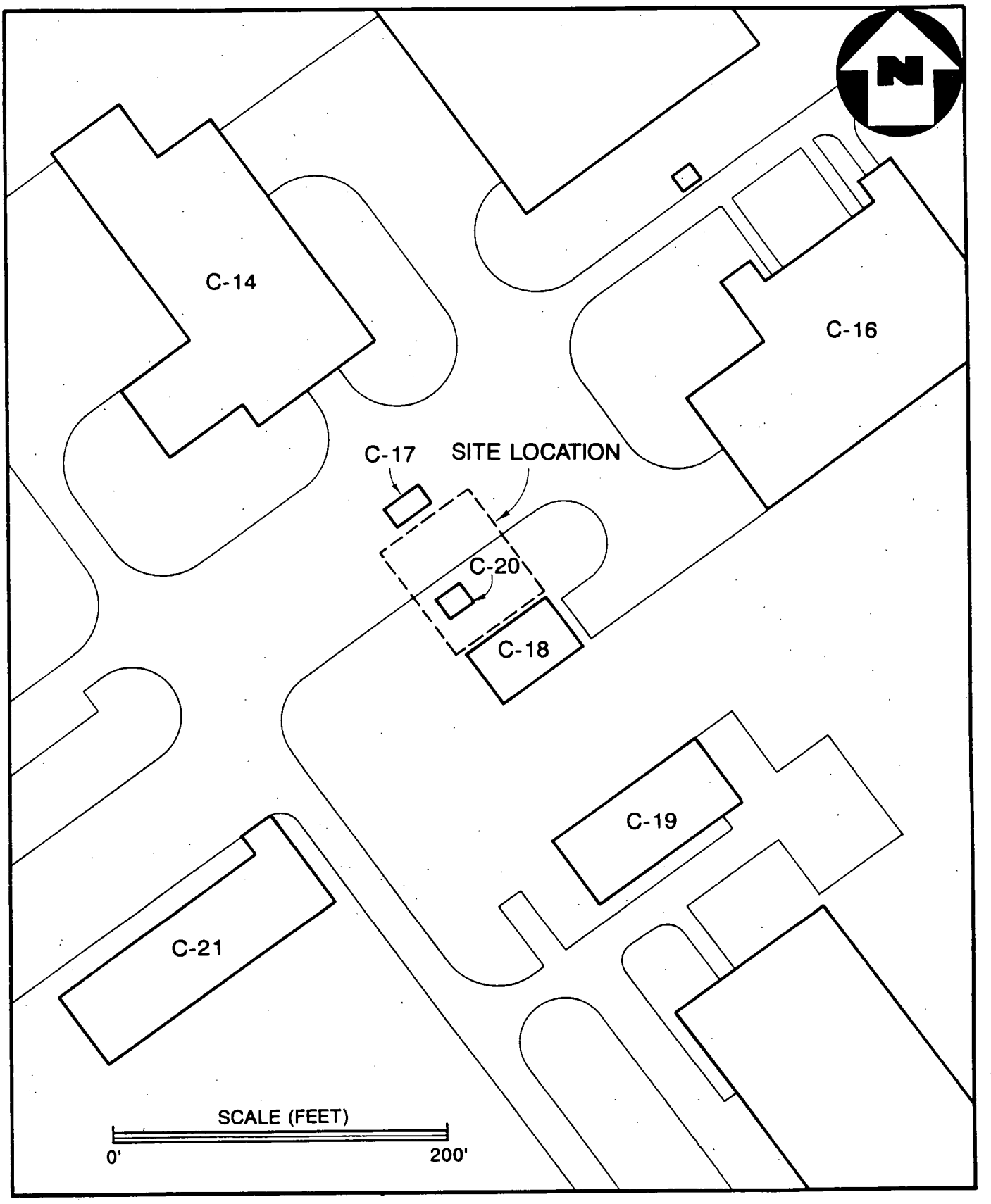

FIGURE: 2

DETAILED SITE MAP

UST INVESTIGATION AT BUILDING C-17, NWS EARLE

HALLIBURTON NUS
Environmental Corporation

2.0 SITE ASSESSMENT AND SAMPLING

The diesel and unleaded gasoline delivery lines that failed the May 14, 1991 tightness test are located near Building C-17 on the main base (Figure 2, page 1-3). The tanks and associated piping were installed in 1988 and are four years old. The Navy subcontracted the excavation of the delivery lines to A & J Construction; excavation of the lines commenced on January 29, 1992 and was witnessed by HALLIBURTON NUS personnel. The depths to the delivery lines being removed ranged from two to 3.5 feet. In accordance with NJ DEPE Bureau of Underground Storage Tank (BUST) regulations, the excavated soils were stockpiled on a plastic liner located south of the concrete tank pads. Approximately 40 cubic yards of grossly contaminated soil were excavated. According to John Pawlus, the designated on-site Navy representative, the excavated soil will be sampled and classified in accordance with NJ DEPE BUST regulations and properly disposed under a separate contract. The as-built diagram of the area under investigation, provided by the NWS Earle Department of Public Works (DPW) (Figure 3, page 2-2), was found to be inaccurate. The unleaded gasoline delivery line was not located where shown on the DPW as-built diagram. Additionally, electrical conduits and venting lines were encountered during excavation that were not indicated on the DPW as-built diagram. For the above reasons, the delivery lines were not completely exposed until January 31, 1992. The actual locations of the delivery lines were mapped by HALLIBURTON NUS after the soil cover had been removed (Figure 4, page 2-3).

Product was found to be present in the delivery lines; the product was drained from both delivery lines before any piping was removed. During the excavation of the diesel delivery line, a one-inch-diameter break was discovered to be leaking product. This leak was immediately reported to NJ DEPE by the on-site Navy representative.

NJ-DEPE-approved and mandated field tests and a screening evaluation were performed during soil excavation and before soil sampling. The field tests and screening evaluation are discussed in sections 2.1 and 2.2, respectively; soil sampling protocol and analyses are discussed in section 2.3.

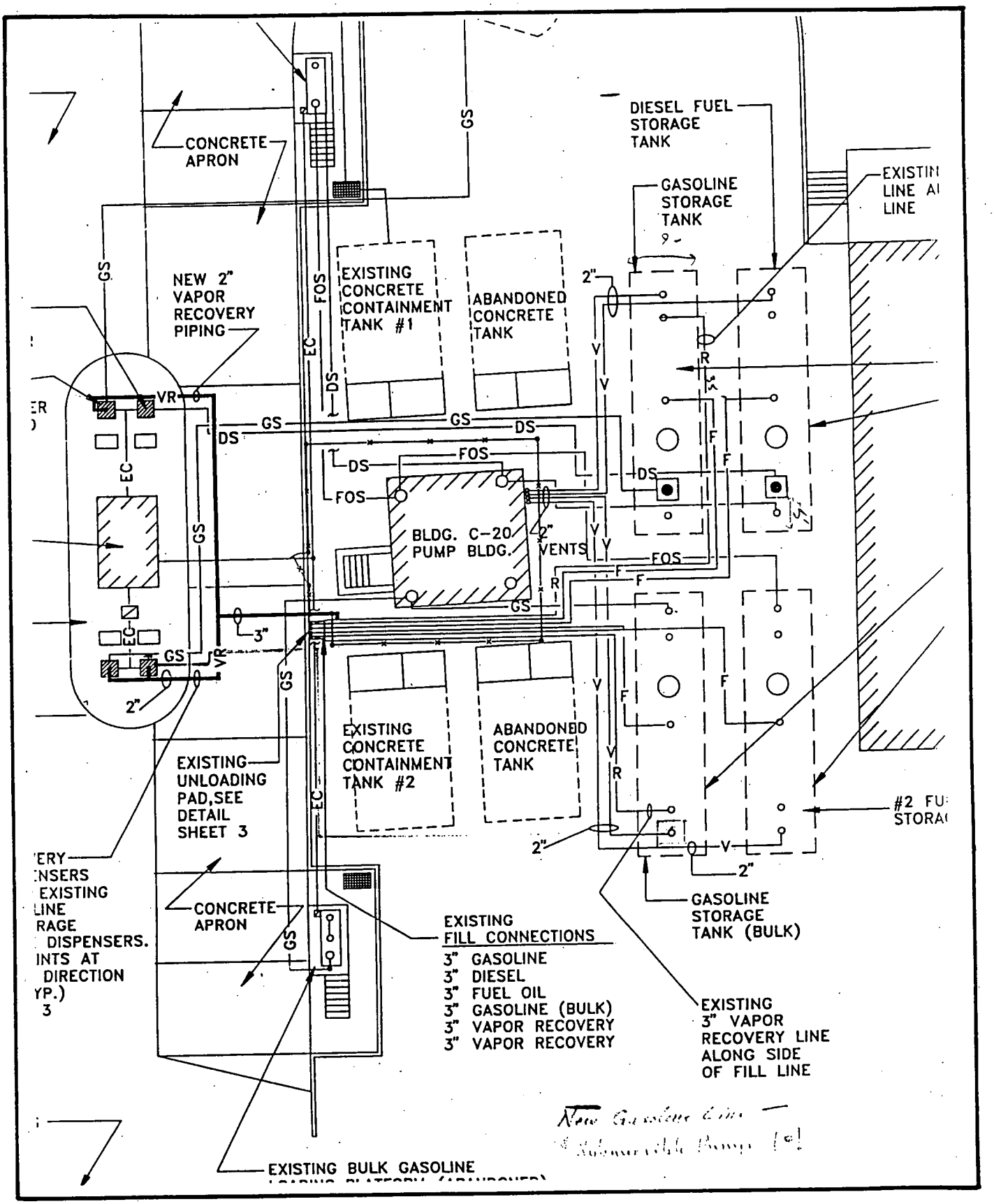

FIGURE: 3

NWS EARL DEPARTMENT OF PUBLIC WORKS AS-BUILT DIAGRAM

UST INVESTIGATION AT BUILDING C-17, NWS EARLE

HALLIBURTON NUS Environmental Corporation

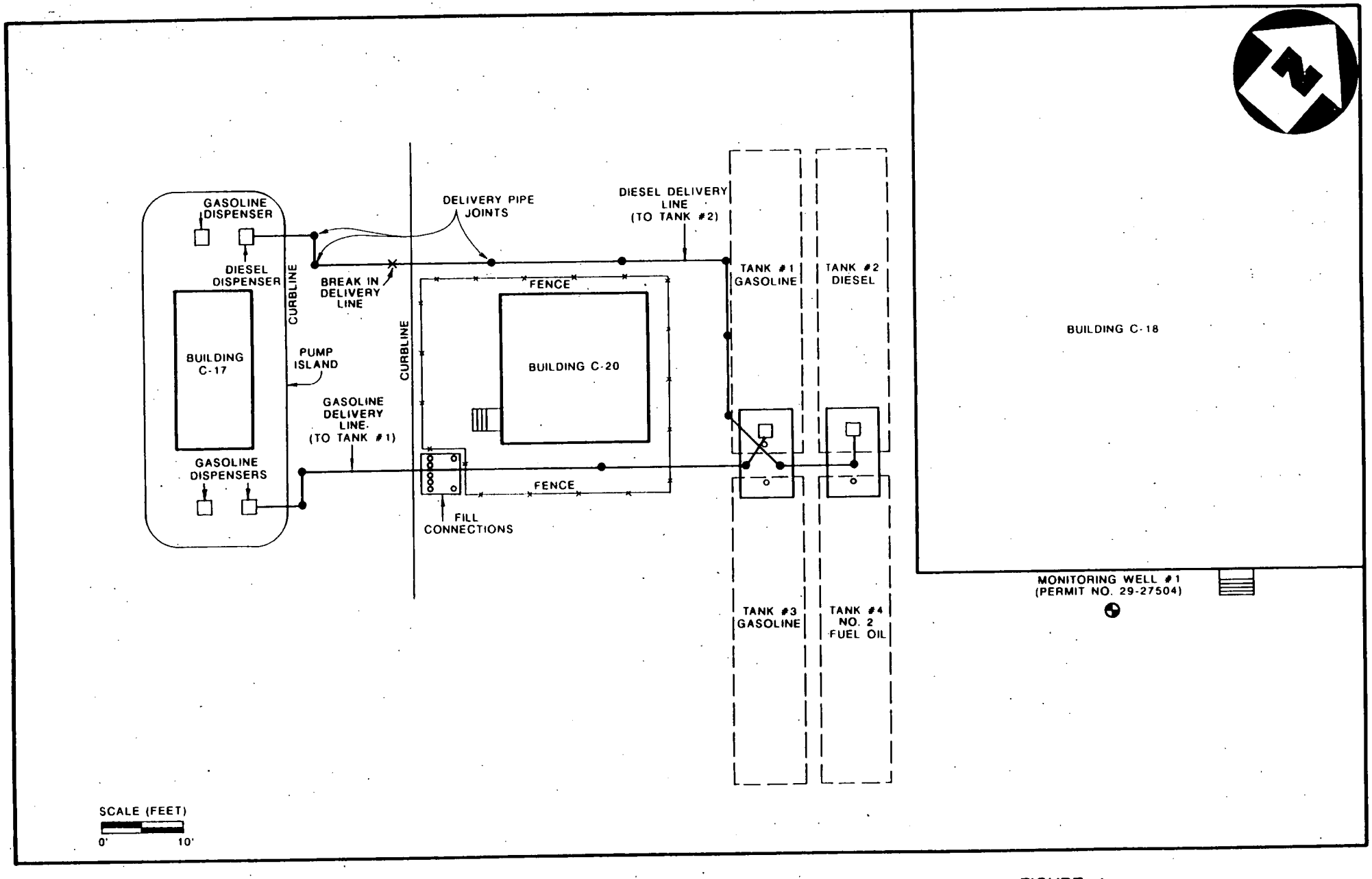

FIGURE: 4

AS-BUILT DIAGRAM FOR TANKS 1 & 2 PIPING SYSTEM

UST INVESTIGATION AT BUILDING C-17, NWS EARLE

HALLIBURTON NUS
Environmental Corporation

Prior to sampling activities, all the piping for the diesel delivery line and a portion of the piping for the unleaded gasoline delivery line were removed. A portion of the unleaded gasoline delivery line was left in place after being drained and capped because the line was located beneath four product fill lines and two vent lines. Removal of the unleaded gasoline delivery line from beneath the fill and vent lines could have caused the fill and vent lines to buckle and possibly rupture. Additionally, the removal of the unleaded gasoline line would have endangered the foundation of Building C-20 and a security fence (Figure 4, page 2-3). Verbal consent from Steve Tatar, of NJ DEPE BUST, was obtained by the on-site Navy representative for the abandonment in place of a portion of the unleaded gasoline delivery pipe. The replacement piping for the two delivery systems, double-walled fiberglass-reinforced plastic three-inch piping, was placed into the trench excavated during the removal of the diesel delivery line (Figure 4, page 2-3). Piping monitoring sumps were installed with the new piping. Approximately two weeks after the new piping had been laid in the excavation, a groundwater monitoring well, MW-1, was installed by a New-Jersey-licensed well driller under the direct supervision of HALLIBURTON NUS. The monitoring well installation and development are discussed in section 2.3.1; groundwater sampling protocol and analyses are discussed in section 2.3.2.

The Health and Safety Plan (HASP) prepared by HALLIBURTON NUS was followed for all site assessment activities, including field tests, screening evaluation, well installation, and sampling events (see Appendix C). The dates of instrument calibration and the calibration method for the HNU utilized during the site assessment are included in the HASP.

2.1 FIELD TESTS

In order to distinguish between soils contaminated with free product and soils that may be contaminated with dissolved product only, field tests were performed during the soil removal. Soils were checked for free product at 31 locations (Figure 5, page 2-5) using the NJ DEPE field sorption method and the soil/water agitation method. Results of these methods are summarized in Table 1 (page 2-6).

For the field sorptive method, a sample of the soil was pressed against a brown paper bag for approximately 10 seconds. A positive result was indicative of free product being present. The paper bag was then immediately checked for the presence of a greasy stain. The result of the field sorptive method was recorded and a portion of the sample was placed into a clear glass jar. The remainder of the sample was checked for petroleum odor and then discarded into a five-gallon bucket. The paper bags were properly disposed off site.

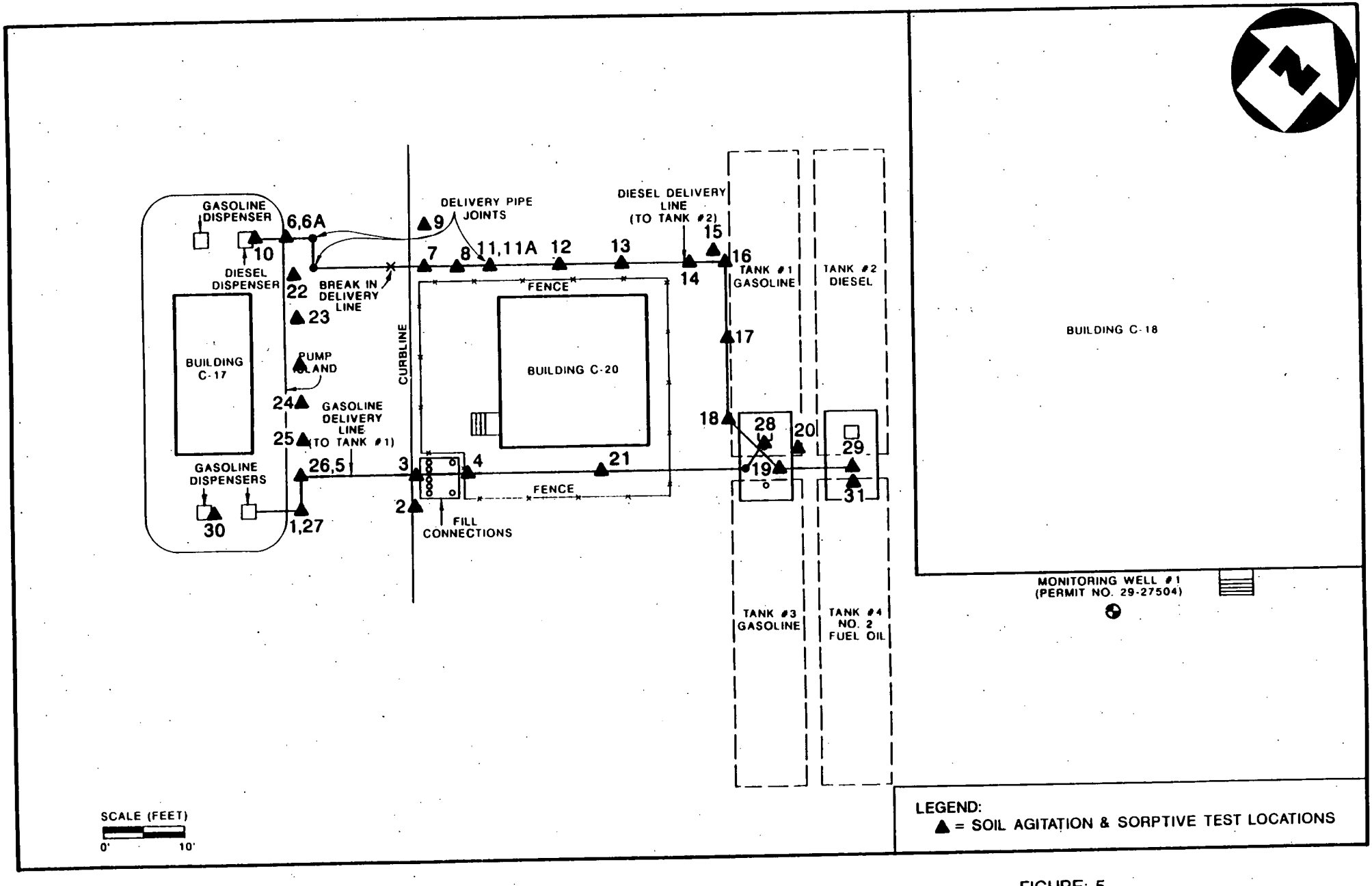

FIGURE: 5

FIELD TEST LOCATION MAP

UST INVESTIGATION AT BUILDING C-17, NWS EARLE

HALLIBURTON NUS
Environmental Corporation

TABLE 1
RESULTS OF FIELD TEST METHODS
UST INVESTIGATION AT BUILDING C-17, NWS EARLE
COLTS NECK, NEW JERSEY

Station Number	Sample Depth (feet)	Field Sorptive - Stain	Field Sorptive - Odor	Soil/Water Agitation - Headspace Measurement (ppm)	Soil/Water Agitation - Sheen
1	0.5	--	--	50	yes
1	2	yes	yes	50	yes
2	0.5	no	no	0	no
2	1	no	no	0	no
2	1.5	no	yes	5	no
3	0.5 - 1	slight	yes	5	slight
3	2	no	yes	75	yes
3	2.5	slight	yes	80 - 90	slight
4	1.5 - 2	no	slight	11	slight
5	1.5 - 2	no	yes	50	yes
6	1.5	no	yes	20	slight
6a	--	yes	yes	55	yes
7	1.5	slight	yes	30	yes
7	2	--	yes	7	--
8	2	no	no	0	no
8	3	slight	yes	19	--
8	4	yes	yes	50	yes
9	2	yes	yes	20	yes
10	2.5	yes	yes	--	yes
11	2.5	no	no	0	no
11a	2.5	no	no	3	no
12	2.5	yes	yes	25	yes
13	2.5	yes	yes	30	yes
14	2.5	no	yes	30	slight
15	1.9	no	yes	30	no
16	3	no	no	40	no
17	3	no	no	15	slight
18	3	no	no	180	slight
19	3	yes	yes	200	yes
20	3	no	no	1	slight
21	3	yes	yes	250	yes
22	3	slight	yes	30	slight
23	3	--	--	--	--
24	3	yes	yes	80	yes
25	3	yes	yes	250	yes
26	3	yes	yes	250	yes
27	3	yes	yes	80	yes
28	3	yes	yes	200	yes
29	2.5	slight	yes	60	yes
30	2.5	no	no	0	no
31	3	no	slight	3	slight

For the soil/water agitation method, a clear glass jar was partially filled with the sample and a headspace reading was taken with an HNU instrument. Water was then added to the jar to a height of approximately 0.5 inch above the soil surface, and the jar was sealed. The jar was agitated by shaking for approximately 30 seconds, opened, and checked for the presence of a sheen on the water surface. The results of the soil/water agitation method, including the HNU reading, were recorded and the sample was discarded into the five-gallon bucket. The jar and lid were then decontaminated using an Alconox and water wash, a clean water rinse, and a deionized water spray. The bucket containing the discarded soil and water samples was emptied onto the plastic-underlain pile of excavated soil. The bucket was decontaminated as needed using the procedures described above.

2.2 SCREENING EVALUATION

A screening evaluation was conducted by HALLIBURTON NUS personnel during the excavation in order to locate possible hot spots and to indicate the need for further removal of contaminated soil. A background reading of zero was obtained with an HNU instrument upwind of the site before daily site assessment activities commenced. The HNU utilized for the screening evaluation recorded readings above background in the trench; it was therefore determined that the soils in the wall and foot of the excavation were contaminated and should be removed. However, at the instruction of the on-site Navy representative, contaminated soil was left in the excavation because the current excavation contract did not allow for the extensive removal of contaminated soils. A total of 40 cubic yards of contaminated soil were excavated and stockpiled on a plastic liner. The on-site Navy representative informed Steve Tatar, of NJ DEPE BUST, of this decision prior to the soil sampling. According to the on-site Navy representative, additional soil will be excavated during retrofit of the entire facility in 1993.

2.3 SOIL SAMPLING PROTOCOL AND ANALYSES

In order to evaluate subsurface conditions, discrete soil samples were taken at all elbows and joints in the delivery lines, at 15-foot intervals along straight runs of the lines, and at all breaks in the lines. All soil sampling was done in accordance with NJ DEPE BUST regulations. Soil samples were taken from beneath the piping at depths ranging from two feet to 3.5 feet. A total of 20 soil samples, including two duplicate samples, were taken on January 31 and February 3, 1992. The sampling procedures given in the NJ DEPE Division of Hazardous Site Mitigation's Field Sampling Procedures Manual, dated February 1988, were followed. Subsurface soil sample log sheets for the 18 locations are in Appendix D; sampling locations are in Figure 6 (page 2-8). Chain-of-custody forms for the sampling events are included in the data packages (Appendix E). For each sample, the sample number, sample depth, date and time of sampling, and generalized sample location are summarized in Table 2 (page 2-9). Field blanks, rinsate blanks, and trip blanks were taken for each day of sampling because the sampling events were separated by a weekend.

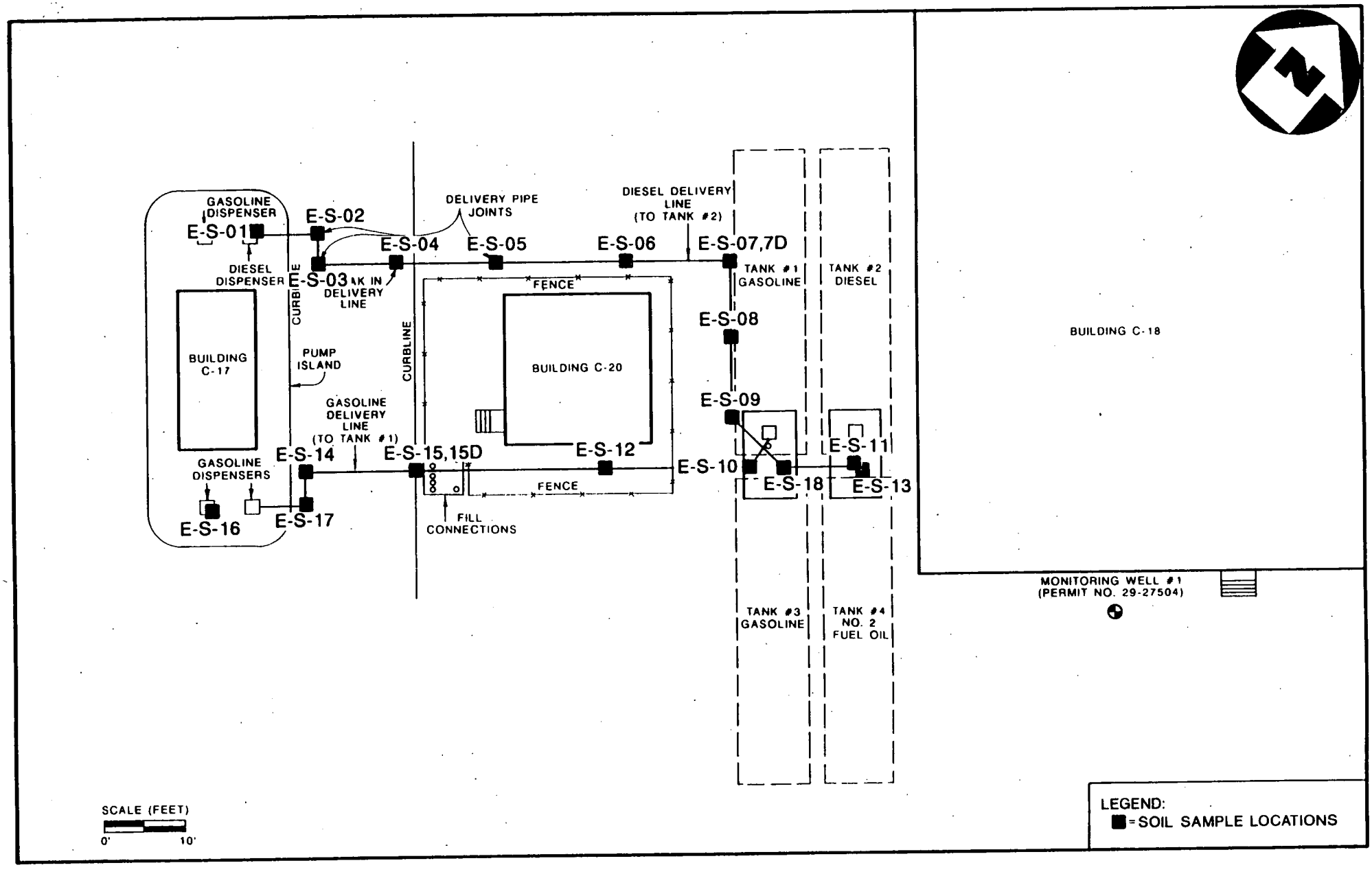

FIGURE: 6

SOIL SAMPLING LOCATION MAP

UST INVESTIGATION AT BUILDING C-17, NWS EARLE

HALLIBURTON NUS
Environmental Corporation

TABLE 2
SAMPLING INFORMATION
UST INVESTIGATION AT BUILDING C-17, NWS EARLE
COLTS NECK, NEW JERSEY

SAMPLE	MEDIA	DEPTH	DATE & TIME		
E-FB-01	Water	---	01-31-92	1505	Field Blank
E-RB-01	Water	---	01-31-92	1510	Rinsate Blank
E-TB-01	Water	---	01-31-92	1510	Trip Blank
E-FB-02	Water	---	02-03-92	1455	Field Blank
E-RB-02	Water	---	02-03-92	1450	Rinsate Blank
E-TP-02	Water	---	02-03-92	1500	Trip Blank
E-FB-03	Water	---	03-02-92	1215	Field Blank
E-RB-03	Water	---	03-02-92	1229	Rinsate Blank
E-TB-03	Water	---	03-02-92	1242	Trip Blank
E-S-01	Soil	2' 4"	01-31-92	1227	Diesel Line
E-S-02	Soil	3'	01-31-92	1244	Diesel Line
E-S-03	Soil	3'	01-31-92	1251	Diesel Line
E-S-04	Soil	3'	01-31-92	1255	Diesel Line
E-S-05	Soil	3'	01-31-92	1300	Diesel Line
E-S-06	Soil	3'	01-31-92	1320	Diesel Line
E-S-07	Soil	3' 6"	01-31-92	1330	Diesel Line
E-S-07D	Soil	3' 6"	01-31-92	1330	Dup. E-S-05
E-S-08	Soil	3' 6"	01-31-92	1345	Gasoline Line
E-S-09	Soil	3' 6"	01-31-92	1355	Gasoline Line
E-S-10	Soil	3'	02-03-92	1040	Gasoline Line
E-S-11	Soil	3'	02-03-92	1150	Diesel Line
E-S-12	Soil	3'	01-31-92	1410	Gasoline Line
E-S-13	Soil	3'	02-03-92	1155	Diesel Line
E-S-14	Soil	3'	02-03-92	1255	Gasoline Line
E-S-15	Soil	3'	02-03-92	1400	Gasoline Line
E-S-15D	Soil	3'	02-03-92	1400	Dup. E-S-15
E-S-16	Soil	2'	02-03-92	1250	Gasoline Line
E-S-17	Soil	3'	02-03-92	1315	Gasoline Line
E-S-18	Soil	3'	02-03-92	1335	Gasoline Line
E-MW-1	Water	Wtr Table	03-02-92	1155	Monit. Well
E-MW-1D	Water	Wtr Table	03-02-92	1155	Dup. E-MW-1

The soil samples and field and rinsate blanks were analyzed, as requested by the Navy, for volatile organic compounds plus 15 (VO + 15), lead, and total petroleum hydrocarbons (TPH). The trip blanks were to be analyzed for VO + 15 only. Three 40-milliliter vials were taken for each sampling location for the VO + 15 analysis. One eight-ounce jar was taken for each sampling location for the lead and TPH analyses. The samples were analyzed by Ceimic Corporation (100 Dean Knauss Drive, Narragansett, Rhode Island). Ceimic Corporation is certified by NJ DEPE as a state-certified water laboratory and holds permanent certification no. 78817 (see Appendix E). Quality assurance/quality control (QA/QC) procedures as described in appendix 6 of the NJ DEPE BUST Scope of Work Investigation and Corrective Action Requirements for Discharges from UST and Piping Systems, dated September 1990, were followed.

In the data package received from the laboratory, the analysis of the trip blank from the first day of sampling was not included. A check of the chain-of-custody form signed by the laboratory upon receipt of samples from the first day of sampling shows that the trip blank was received by them (see Appendix E). When asked by HALLIBURTON NUS to explain this discrepancy, laboratory personnel stated that the trip blank from the first day of sampling was not in the cooler when opened at the laboratory although the chain-of-custody form was signed accepting receipt of the indicated samples, including the trip blank.

2.4 GROUNDWATER MONITORING WELL

2.4.1 Groundwater Monitoring Well Installation and Development

In order to evaluate subsurface conditions downgradient of the delivery lines, a groundwater monitoring well, MW-1 (well permit no. 29-27504), was installed on February 13 and 14, 1992 by a New-Jersey-licensed well driller. NJ DEPE monitoring well construction and grouting specifications for unconsolidated formations were followed as described in appendix 5 of the NJ DEPE BUST Scope of Work Investigation and Corrective Action Requirements for Discharges from UST and Piping Systems (September 1990). Copies of the monitoring well permit, monitoring well record, and boring log are in Appendix F.

The monitoring well location was selected based upon topographic observations and the regional groundwater flow direction because site-specific information on the direction of groundwater flow was not available. Building C-17 is located in a flat area. Based upon topographic observations and the role of streams as discharge points, groundwater flow in the vicinity of Building C-17 should be to the east and southeast toward a tributary of Hockhockson Brook. This direction corresponds with a regional groundwater flow direction to the east and southeast. The well was located approximately 40 feet from the delivery lines because of a security fence and Building C-20 (Figure 4, page 2-3) and subsurface hazards (Figure 7, page 2-11).

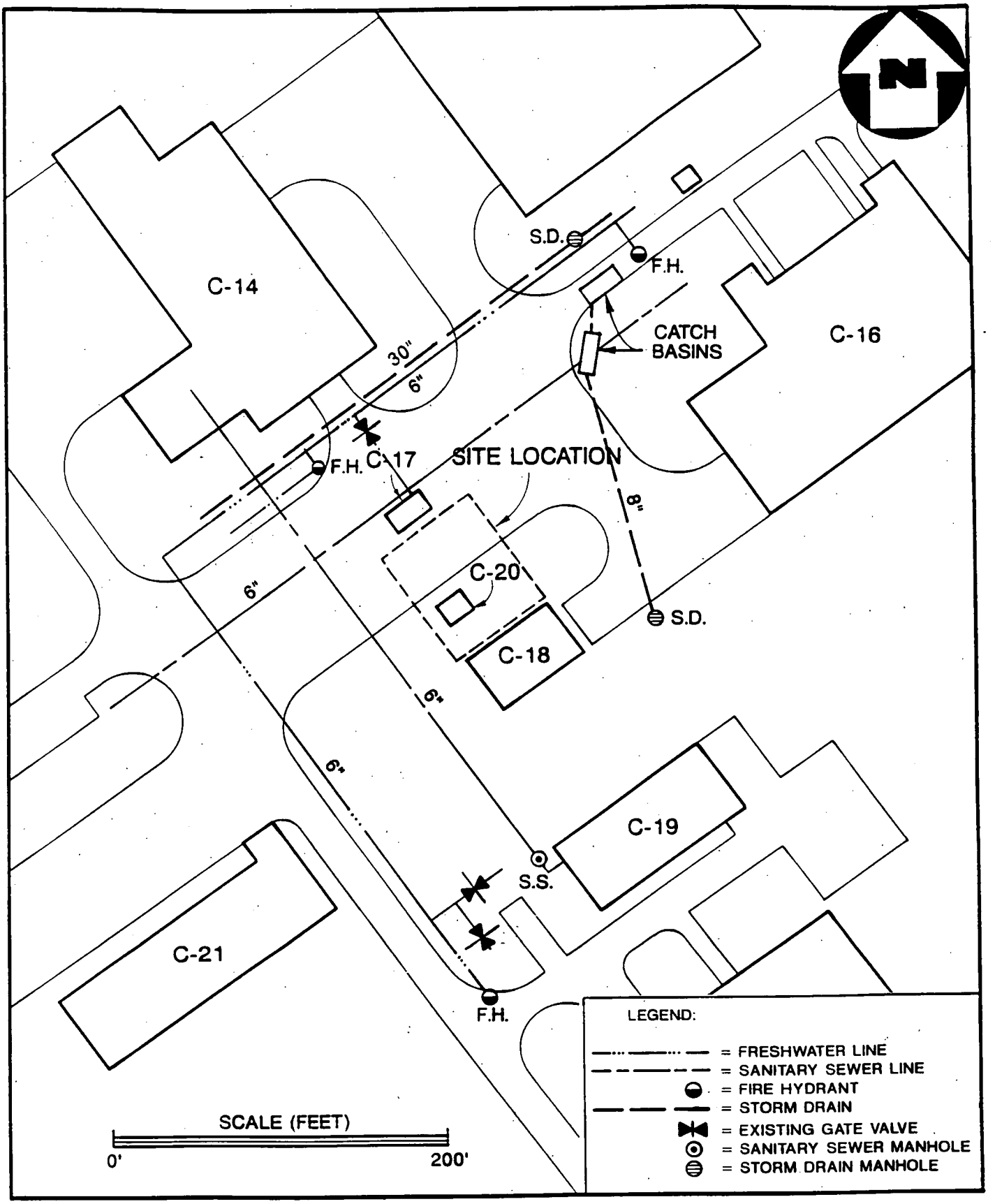

FIGURE: 7

SUBSURFACE HAZARDS

UST INVESTIGATION AT BUILDING C-17, NWS EARLE

HALLIBURTON NUS
Environmental Corporation

A background reading of zero was obtained with an HNU instrument upwind of the site in a "clean" zone before drilling commenced. The 10-inch borehole was continuously sampled by split-spoon from the ground surface to a finished depth of 20.77 feet. The split-spoon samples were screened with an HNU instrument at each lithologic change and at five-foot intervals along the core; no readings above background were recorded. The sample boring log for the well is in Appendix F. The split-spoon samples and drill cuttings were containerized on site in labeled 55-gallon Department of Transportation (DOT) 17-E hazardous waste drums. Four-inch stainless-steel casing (Schedule 40) was installed from the ground surface to 5.77 feet below the ground surface (bgs). Four-inch stainless-steel wrapped screen, 0.10 slot (Schedule 40), was installed from 5.77 feet to 20.77 feet bgs. Morie no. 1 filter pack material was emplaced by free-fall from three to 23 feet bgs. A neat cement grout with a bentonite seal was added from three to zero feet bgs, and the well was completed as a flush mount. A static water level of 10.60 feet bgs was measured on February 14, 1992. The monitoring well was developed by pumping until free of turbidity. The development water was containerized in labeled 55-gallon DOT 17-H hazardous waste drums.

The location of MW-1 was surveyed by a New-Jersey-licensed surveyor on Wednesday, April 22, 1992. Survey report and location plan are in appendix G. Four groundwater monitoring wells were discovered during surveying activities (see appendix G for locations). Three of these monitoring wells are located about 300 feet northwest of Building C-17 and one is located 250 feet west of Building C-17.

2.4.2 Groundwater Sampling Protocol and Analyses

MW-1 was purged and sampled on March 2, 1992, two weeks and two days after well development. Approximately 25 gallons of water, or slightly more than three casing volumes, were removed by bailer from the monitoring well prior to sampling. The purge water was containerized on site in a labeled 55-gallon DOT 17-E hazardous waste drum. One casing volume of water was calculated using the following formula:

[(bottom of well screen in feet - static water level in feet) X 0.654 gallons of water per foot of four-inch casing and screen] = [(20.77 feet - 10.01 feet) X 0.654 feet per gallon] = 6.86 gallons

The pH, conductance, and turbidity of the groundwater were measured after the well had been purged and before the well was sampled. The groundwater had a pH of 4.85, a conductance of 500 micro-ohms, and a turbidity of greater than 200 ntu.

Two groundwater samples, including a duplicate, and field and rinsate blanks were taken. The groundwater samples and field and rinsate blanks were analyzed for VO + 15 including methyl tertiary butyl ether (MTBE) and tertiary butyl alcohol (TBA) and base/neutral extraction plus 15 (B/N + 15). The trip blank was analyzed for VO + 15 including MTBE and TBA. Three 40-milliliter vials were taken for each VO + 15 analysis. Two 2-liter amber bottles were taken for each B/N + 15 analysis.

3.0 SAMPLING RESULTS

The data package for the sampling is in Appendix E.

3.1 SOIL SAMPLES

The field blanks (E-FB-01 and E-FB-02) and rinsate blanks (E-RB-01 and E-RB-02) were analyzed for VO + 15, lead, and TPH. Methylene chloride was detected in the field blanks and rinsate blanks, acetone was detected in E-FB-01, and lead was detected in E-FB-01 and E-RB-01. The trip blanks (E-TB-01 and E-TB-02) were to be analyzed for VO + 15; no contaminants were detected in E-TB-02. As previously discussed in section 2.3, E-TB-01 was not analyzed. Volatile organic compounds found at concentrations above their detection limit in the soil samples and associated blanks are shown on Figure 8a (page 3-2) and summarized in Table 3 (page 3-3). Total benzene, toluene, ethylbenzene, and xylene (BTEX) volatile organic compounds detected are summarized in Figure 8b (page 3-4). The tentatively identified volatile organic compounds detected in soil samples and associated blanks are shown on Figure 9 (page 3-5) and summarized in Table 4 (page 3-6). TPH and lead concentrations detected in soil samples and associated blanks are shown on Figure 10 (page 3-7) and summarized in Table 5 (page 3-8).

3.1.1 Diesel Delivery Line

Thirteen samples (listed below) from the trench excavated for the removal of the diesel delivery line were analyzed for VO + 15, lead, and TPH.

E-S-01	E-S-05	E-S-08	E-S-18
E-S-02	E-S-06	E-S-09	
E-S-03	E-S-07	E-S-11	
E-S-04	E-S-07D	E-S-13	

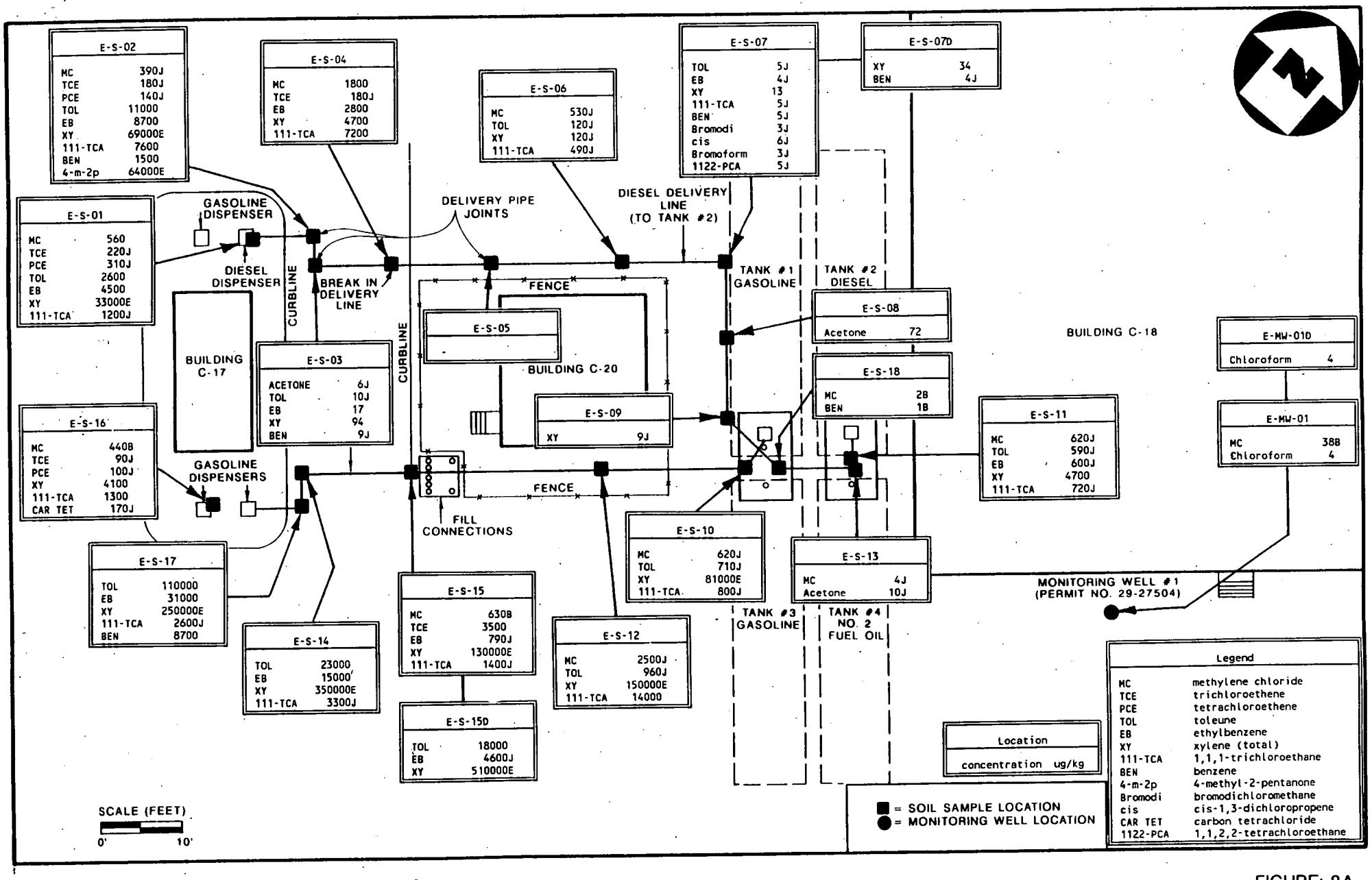

FIGURE: 8A

VOLATILE ORGANIC COMPOUNDS DETECTED IN SOIL AND GROUNDWATER SAMPLES

UST INVESTIGATION AT BUILDING C-17, NWS EARLE

HALLIBURTON NUS Environmental Corporation

TABLE 3
VOLATILE ORGANIC COMPOUNDS DETECTED IN SOIL SAMPLES AND ASSOCIATED BLANKS
UST INVESTIGATION AT BUILDING C-17, NWS EARLE
COLTS NECK, NEW JERSEY

VOLATILE ORGANIC COMPOUND in ug/kg	CRQL	E-FB-01	E-RB-01	E-FB-02	E-RB-02	E-TB-02	E-S-01	E-S-02	E-S-03	E-S-04	E-S-05	E-S-06	E-S-07	E-S-07D
methylene chloride	10	5 B	4 B	4 B	4 B		560 J	390 J		1800		530 J		
acetone	10	14							6 J					
trichloroethene	10						220 J	180 J		180 J				
tetrachloroethene	10						310 J	140 J						
toluene	10						2600	11000	10 J			120 J	5 J	
ethylbenzene	10						4500	8700	17	2800			4 J	
xylene (total)	10						33000 E	69000 E	94	4700		120 J	13	34
1,1,1-trichloroethane	10						1200 J	7600		7200		490 J	5 J	
benzene	10							1500	9 J				5 J	4 J
4-methyl-2-pentanone	10							64000 E						
bromodichloromethane	10												3 J	
cis-1,3-dichloropropene	10												6 J	
bromoform	10												3 J	
carbon tetrachloride	10													
1,1,2,2-tetrachloroethane	10												5 J	
dilution factor		1	1	1	1	1	125	125	1	125	5	125	1	1
percent solids							88	88	87	88	91	86	96	95
sample depth (feet)							2.3	3	3	3	3	3	3.5	3.5

VOLATILE ORGANIC COMPOUND in ug/kg	CRQL	E-S-08	E-S-09	E-S-10	E-S-11	E-S-12	E-S-13	E-S-14	E-S-15	E-S-15D	E-S-16	E-S-17	E-S-18
methylene chloride	10			620 J	620 J	2500 J	4 J		630 B		440 B		2 B
acetone	10	72					10 J						
trichloroethene	10										90 J		
tetrachloroethene	10										100 J		
toluene	10			710 J	590 J	960 J		23000	3500	18000		110000	
ethylbenzene	10				600 J			15000	790 J	4600 J		31000	
xylene (total)	10		9 J	81000 E	4700	150000 E		350000 E	130000 E	510000 E	4100	250000 E	
1,1,1-trichloroethane	10			800 J	720 J	14000		3300 J	1400 J		1300	2600 J	
benzene	10											8700	1 B
4-methyl-2-pentanone	10												
bromodichloromethane	10												
cis-1,3-dichloropropene	10												
bromoform	10										170 J		
carbon tetrachloride	10												
1,1,2,2-tetrachloroethane	10												
dilution factor		1	1	125	125	500	1	625	250	1250	62.5	500	1
percent solids		86	87	92	91	95	93	86	83	88	90	84	92
sample depth (feet)		3.5	3.5	3	3	3	3	3	3	3	2	3	3

B - Contaminant Detected in Blank
J - Estimated Value
E - Concentration Exceeded Calibration Range of Instrument
CRQL - Contract Required Quantitative Limit

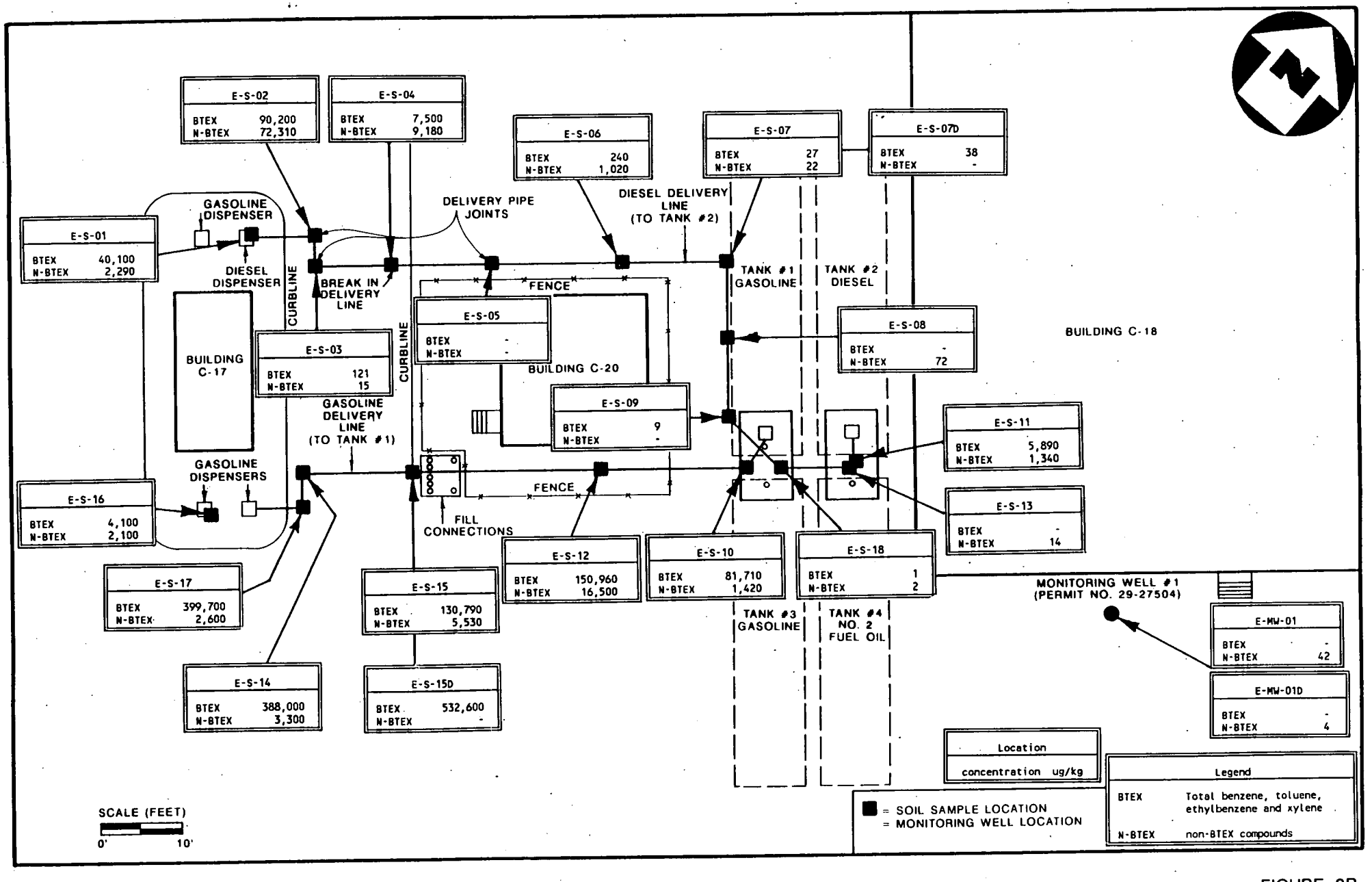

FIGURE: 8B

TOTAL BTEX & NON-BTEX DETECTED IN SOIL & GROUNDWATER SAMPLES

UST INVESTIGATION AT BUILDING C-17, NWS EARLE

HALLIBURTON NUS Environmental Corporation

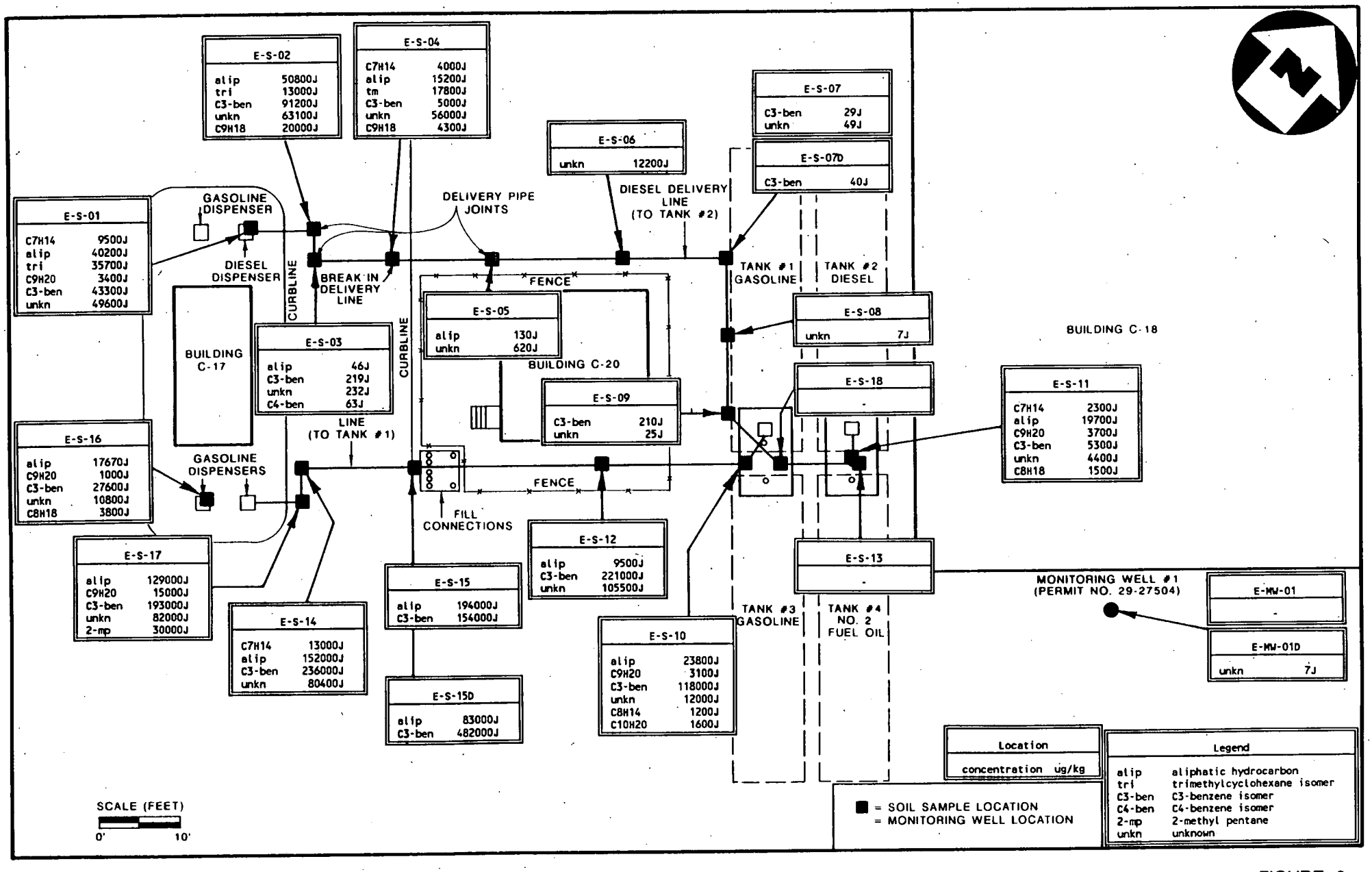

FIGURE: 9

TENTATIVELY IDENTIFIED VOLATILE ORGANIC COMPOUNDS DETECTED IN SOIL & GROUNDWATER SAMPLES

UST INVESTIGATION AT BUILDING C-17, NWS EARLE

HALLIBURTON NUS Environmental Corporation

TABLE 4
TENTATIVELY IDENTIFIED VOLATILE ORGANIC COMPOUNDS DETECTED IN SOIL SAMPLES AND ASSOCIATED BLANKS
UST INVESTIGATION AT BUILDING C-17, NWS EARLE
COLTS NECK, NEW JERSEY

TENTATIVELY IDENTIFIED VOLATILE ORGANIC COMPOUNDS in ug/kg	E-FB-01	E-RB-01	E-FB-02	E-RB-02	E-TB-02	E-S-01	E-S-02	E-S-03	E-S-04	E-S-05	E-S-06	E-S-07	E-S-07D
C7H14 isomer						9500 J			4000 J				
aliphatic hydrocarbon						40200 J	50800 J	46 J	15200 J	130 J			
trimethylcyclohexane isomer						35700 J	13000 J		17800 J				
C9H20 isomer						3400 J							
C3-benzene isomer						43300 J	91200 J	219 J	5000 J			29 J	40 J
unknown						49600 J	63100 J	232 J	56000 J	620 J	12200 J	49 J	
C9H18 isomer							20000 J		4300 J				
C4-benzene isomer								63 J					
C8H14 isomer													
C10H20 isomer													
C8H18 isomer													
2 methyl pentane													
dilution factor	1	1	1	1	1	125	125	1	125	5	125	1	1
percent solids						88	88	87	88	91	86	96	95
sample depth (feet)						2.3	3	3	3	3	3	3.5	3.5

TENTATIVELY IDENTIFIED VOLATILE ORGANIC COMPOUNDS in ug/kg	E-S-08	E-S-09	E-S-10	E-S-11	E-S-12	E-S-13	E-S-14	E-S-15	E-S-15D	E-S-16	E-S-17	E-S-18
C7H14 isomer				2300 J			13000 J					
aliphatic hydrocarbon			23800 J	19700 J	9500 J		152000 J	194000 J	83000 J	17670 J	129000 J	
trimethylcyclohexane isomer												
C9H20 isomer			3100 J	3700 J						1000 J	15000 J	
C3-benzene isomer		210 J	118000 J	5300 J	221000 J		236000 J	154000 J	482000 J	26700 J	193000 J	
unknown	7 J	25 J	12000 J	4400 J	105500 J		80400 J			10800 J	82000 J	
C9H18 isomer												
C4-benzene isomer												
C8H14 isomer			1200 J									
C10H20 isomer			1600 J									
C8H18 isomer				1500 J						3800 J		
2 methyl pentane											30000 J	
dilution factor	1	1	125	125	500	1	625	250	1250	62.5	500	1
percent solids	86	87	92	91	95	93	86	83	88	90	84	92
sample depth (feet)	3.5	3.5	3	3	3	3	3	3	3	2	3	3

B - Contaminant Detected In Blank
J - Estimated Value
E - Concentration Exceeded Calibration Range of Instrument
CRQL - Contract Required Quantitative Limit

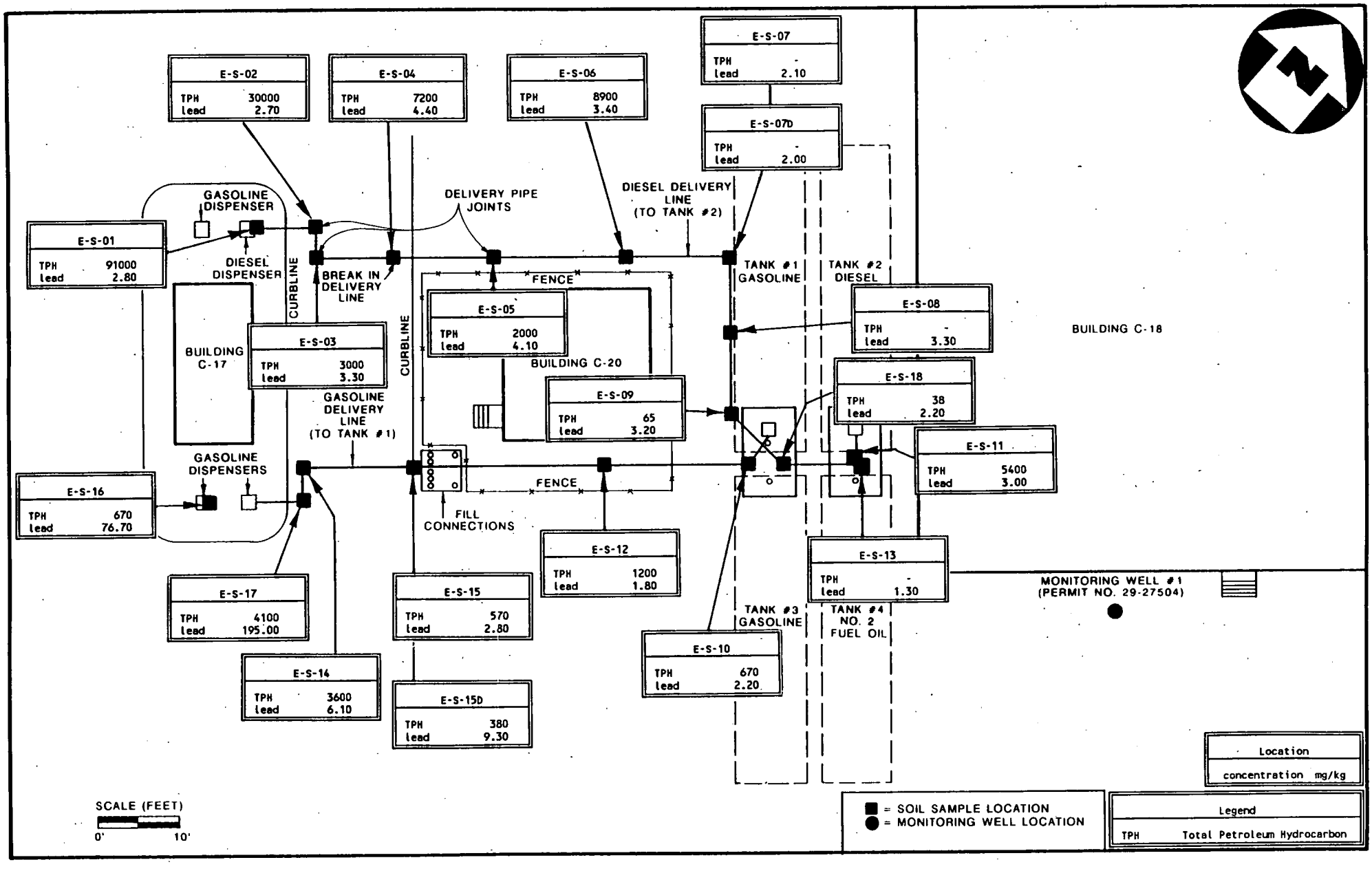

FIGURE: 10

TOTAL PETROLEUM HYDROCARBON & LEAD DETECTED IN SOIL SAMPLES

UST INVESTIGATION AT BUILDING C-17, NWS EARLE

HALLIBURTON NUS Environmental Corporation

TABLE 5
TOTAL PETROLEUM HYDROCARBONS AND LEAD DETECTED IN SOIL SAMPLES AND ASSOCIATED BLANKS
UST INVESTIGATION AT BUILDING C-17, NWS EARLE
COLTS NECK, NEW JERSEY

	CRQL	E-FB-01	E-RB-01	E-FB-02	E-RB-02	E-TB-02	E-S-01	E-S-02	E-S-03	E-S-04	E-S-05	E-S-06	E-S-07	E-S-07D
TPH in mg/kg	30						91000	30000	3000	7200	2000	9800		
Lead in mg/kg	1	1.10 B	2.20 B				2.80	2.70	3.30	4.40	4.10	3.40	2.10	2.00
dilution factor							50	300	40	100	25	70	1	1
percent solids							89.5	87.9	86.9	89.4	87.3	86.6	96.2	95.3
sample depth (feet)							2.3	3	3	3	3	3	3.5	3.5

	CRQL	E-S-08	E-S-09	E-S-10	E-S-11	E-S-12	E-S-13	E-S-14	E-S-15	E-S-15D	E-S-16	E-S-17	E-S-18
TPH in mg/kg	30		65	670	5400	1200		3600	570	380	670	4100	38
Lead in mg/kg	1	3.30	3.20	2.20	3.00	1.80	1.30	6.10	2.80	9.30	76.70	195.00	2.20
dilution factor		1	10	10	100	10	1	50	10	5	5	100	1
percent solids		87.3	87.0	93.6	90.7	94.6	95.2	85.7	92.6	92.2	88.9	82.7	94.7
sample depth (feet)		3.5	3.5	3	3	3	3	3	3	3	2	3	3

B - Contaminant Detected in Blank
CRQL - Contract Required Quantitative Limit

Volatile organic compounds identified in samples from the diesel delivery line trench are methylene chloride, acetone, trichloroethene, tetrachloroethene, toluene, ethylbenzene, xylene (total), 1,1,1-trichloroethane, benzene, 4-methyl-2-pentanone, bromodichloromethane, cis-1,3-dichloropropene, bromoform, and 1,1,2,2-tetracholoroethane. The maximum concentration of BTEX detected in samples from the diesel delivery line trench is 40,100 ug/kg (sample E-S-01).

VOLATILE ORGANIC COMPOUNDS DETECTED IN DIESEL DELIVERY LINE SOIL SAMPLES

Compound	Number of Samples Compound Was Detected In	Maximum Concentration (ug/kg)	Sample with Highest Concentration
methylene chloride	7	1,800	E-S-04
acetone	3	72	E-S-08
trichloroethene	3	220 J	E-S-01
tetrachloroethene	2	31 J	E-S-01
toluene	6	590 J	E-S-11
ethylbenzene	6	8,700	E-S-02
xylene (total)	9	69,000 E	E-S-02
1,1,1-trichloroethane	6	7,600	E-S-02
benzene	5	1,500	E-S-02
4-methyl-2-pentanone	1	64,000 E	E-S-02
bromodichloromethane	1	3 J	E-S-07
cis-1,3-dichloropropene	1	6 J	E-S-07
bromoform	1	3 J	E-S-07
1,1,2,2-tetrachloroethane	1	5 J	E-S-07

Tentatively identified VO compounds identified in samples from the diesel delivery line trench are C7H14 isomer, aliphatic hydrocarbon, trimethylcyclohexane isomer, C9H20 isomer, C_3-benzene isomer, unknowns, C9H18 isomer, C_4-benzene isomer, and C8H18 isomer (see Appendix E).

TPH was detected in eight of the 13 samples; the maximum concentration was found in E-S-01 (91,000 mg/kg). Lead was detected in all 13 samples; the maximum concentration was found in E-S-04 (4.4 mg/kg).

3.1.2 Unleaded Gasoline Delivery Line

Seven samples (listed below) from the trench excavated for the removal of the unleaded gasoline delivery line were analyzed for VO + 15, lead and TPH.

E-S-10	E-S-14	E-S-15D	E-S-17
E-S-12	E-S-15	E-S-16	

VO compounds identified in samples from the unleaded gasoline delivery line trench are methylene chloride, acetone, trichloroethene, tetrachloroethene, toluene, ethylbenzene, xylene (total), 1,1,1-trichloroethane, benzene, and carbon tetrachloride. The maximum concentration of BTEX detected in samples from the unleaded gasoline delivery line trench is 532,600 ug/kg (sample E-S-15D).

VOLATILE ORGANIC COMPOUNDS DETECTED IN UNLEADED GASOLINE DELIVERY LINE SOIL SAMPLES

Compound	Number of Samples Compound Was Detected In	Maximum Concentration (ug/kg)	Sample with Highest Concentration
methylene chloride	4	2,500 J	E-S-12
trichloroethene	1	90 J	E-S-16
tetrachloroethene	1	100 J	E-S-16
toluene	6	110,000	E-S-17
ethylbenzene	4	31,000	E-S-17
xylene (total)	7	510,000 E	E-S-15D
1,1,1-trichloroethane	6	14,000	E-S-12
benzene	1	8,700	E-S-17
carbon tetrachloride	1	170 J	E-S-16

TABLE 6
VOLATILE AND SEMIVOLATILE ORGANIC COMPOUNDS, INCLUDING TENTATIVELY IDENTIFIED COMPOUNDS, DETECTED IN GROUNDWATER SAMPLES AND ASSOCIATED BLANKS
UST INVESTIGATION AT BUILDING C-17, NWS EARLE
COLTS NECK, NEW JERSEY

VOLATILE ORGANIC COMPOUND in ug/kg	CRQL	E-FB-03	E-RB-03	E-TB-03	E-MW-01	E-MW-01D
methylene chloride	1	6 B	4 B		38 B	
chloroform					4	4
methyl-tertiary butyl ether	10					
tertiary-butyl alcohol	100					

well permit number 29-27504
depth to water table is 10.6 feet below the ground surface
screened interval runs from 5.77 to 20.77 feet below the ground surface

TENTATIVELY IDENTIFIED VOLATILE ORGANIC COMPOUND in ug/kg	E-FB-03	E-RB-03	E-TB-03	E-MW-01	E-MW-01D
unknown	9 J			7 J	

SEMIVOLATILE ORGANIC COMPOUNDS in ug/kg	CRQL	E-FB-03	E-RB-03	E-MW-01	E-MW-01D
bis(2-ethylhexyl)phthalate	10			6 J	

TENTATIVELY IDENTIFIED SEMIVOLATILE ORGANIC COMPOUNDS in ug/kg	E-FB-03	E-RB-03	E-MW-01	E-MW-01D
unknown	8 J	13 J	9 J	18 J
octadecanoic acid, butyl ester	7 J			
aliphatic hydrocarbon	5 J	5 J	63 J	137 J

B - Contaminant Detected In Blank
J - Estimated Value
CRQL - Contract Required Quantitative Limit

Tentatively identified VO compounds identified in samples from the unleaded gasoline delivery line trench are C7H14 isomer, aliphatic hydrocarbon, C9H20 isomer, C_3-benzene isomer, unknowns, C8H14 isomer, C10H20 isomer, C8H18 isomer, and 2-methyl pentane (see Appendix E).

TPH and lead were detected in all seven samples; the maximum concentration of TPH (4,100 mg/kg) and the maximum concentration of lead (195.00 mg/kg) were found in E-S-17.

3.2 GROUNDWATER SAMPLES

The field blank (E-FB-03) and rinsate blank (E-RB-03) were analyzed for VO + 15 including MTBE and TBA, B/N + 15, lead, and TPH. Methylene chloride was detected in the field blank and rinsate blank. The trip blank (E-TB-03) was analyzed for VO + 15 including MTBE and TBA; no contaminants were detected in E-TB-03. Methylene chloride was detected in sample MW-01 (38 ug/l). Chloroform was detected in sample MW-01 (4 ug/l) and the duplicate sample MW-01D (4 ug/l). Bis(2-ethylhexyl) phthalate was detected in the duplicate sample MW-1D (6 ug/l J). Compounds detected above their detection limit in the groundwater samples and associated blanks are shown on Figures 8a and 8b and 9 through 11 (pages 3-2, 3-4, 3-5, 3-7, and 3-12) and summarized in Table 6 (page 3-13).

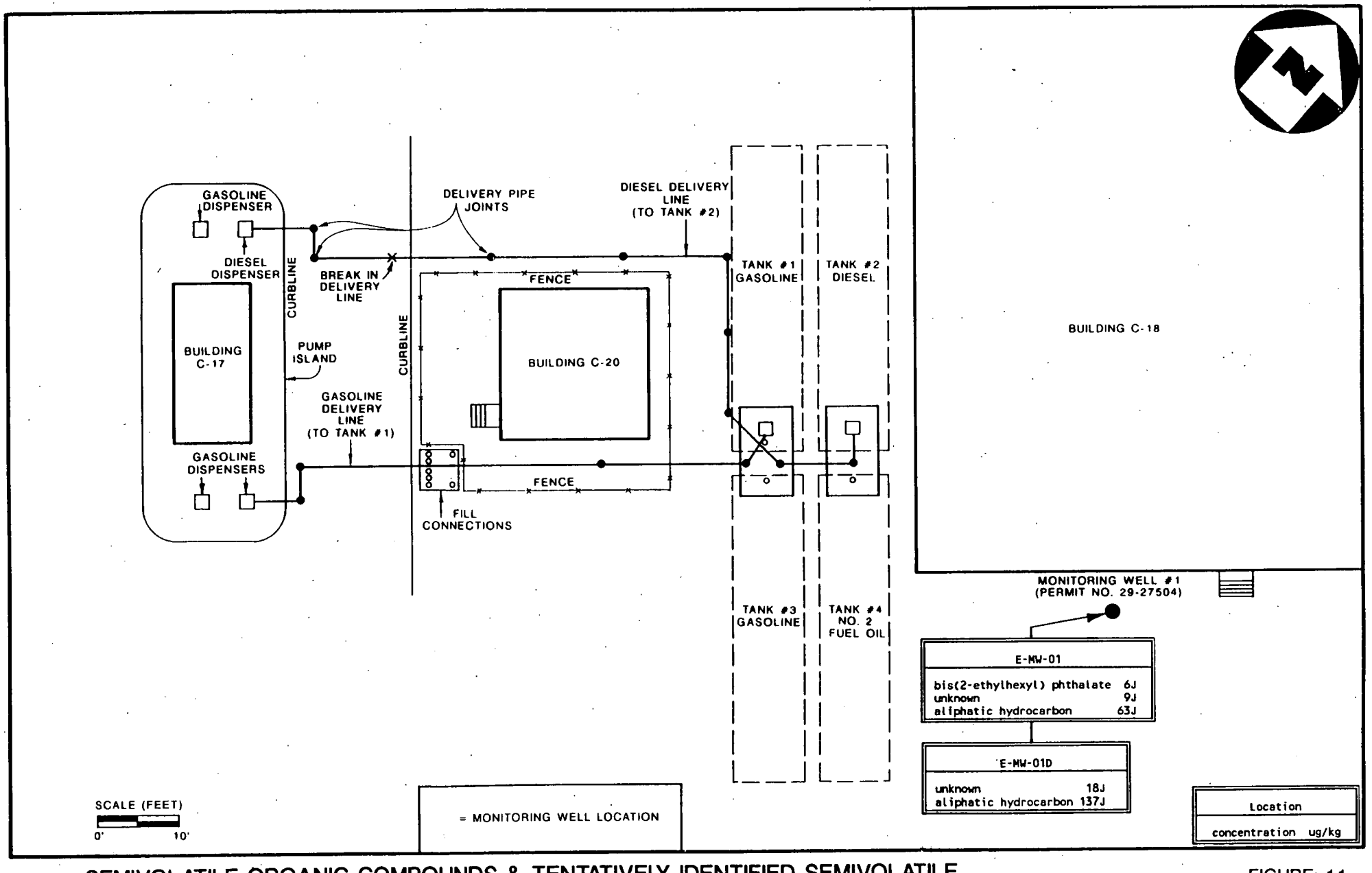

SEMIVOLATILE ORGANIC COMPOUNDS & TENTATIVELY IDENTIFIED SEMIVOLATILE ORGANIC COMPOUNDS DETECTED IN GROUNDWATER SAMPLES

UST INVESTIGATION AT BUILDING C-17, NWS EARLE

FIGURE: 11

HALLIBURTON NUS Environmental Corporation

4.0 SITE CHARACTERIZATION

4.1 GENERAL PARAMETERS

4.1.1 Physical Geography

Building C-17 is located on the northern portion of the main base area of NWS Earle at 40° 16′ 09″ north latitude and 74° 09′ 20″ west longitude. The main base is situated on the outer plain of the emergent portion of the Atlantic Coastal Plain Physiographic Province, approximately six miles inland from the Atlantic Ocean. The terrain of the outer plain is generally extremely flat. An exception to this is Hominy Hills, an east-northeast-trending series of low hills, located 0.5 mile south of Building C-17 (Figure 1, page 1-2). Elevation across the main base ranges from 100 to 300 feet above mean sea level; elevation in the vicinity of Building C-17 ranges from 100 to 120 feet above mean sea level.

4.1.2 Climate

The main base is characterized by a predominantly continental climate. The dominant wind direction during the winter months is from the northwest. Shore winds may reach the main base area during th spring and summer months. The mean annual temperature in Freehold is 52.7°F. Average temperature extremes in Freehold range from 22°F to 39°F in January and 63°F to 85°F in July. The average annual precipitation of 45 inches is generally evenly distributed throughout the year. The growing season in this area ranges from 140 to 160 days.

4.1.3 Surface Drainage

Rivers and brooks in the main base area ultimately discharge to the Atlantic Ocean. A northward-flowing tributary of Hockhockson Brook is located 1,300 feet north of Building C-17. Hockhockson Brook drains northward and eastward into the Swimming River. No other surface water bodies have been identified on the United States Geological Survey (U.S.G.S.) 7.5 minute series, Marlboro, New Jersey Topographic Map as being within 0.5 mile of Building C-17.

4.1.4 Population and Land Use

An estimated 2,500 people reside and/or work on the base within 0.5 mile of Building C-17. Land use includes residences, office buildings and warehouses, medical and community facilities, roads, and undeveloped areas.

4.2 POTENTIAL SUBSURFACE RECEPTORS

4.2.1 Wells

No non-public supply wells were identified within a 0.5-mile radius from Building C-17 during a microfilm search of NJ DEPE well records (see Appendix H). Additionally, the on-site Navy representative stated that there were no wells located on the main base.

No water withdrawal points were identified by the NJ DEPE radius program as being within one mile of Building C-17 (see Appendix G). Based upon a microfilm search of NJ DEPE records, seven domestic wells, three public non-community wells, one retail business well, and 22 monitoring wells are located within one mile of Building C-17. Based upon verbal information received from the Navy, in addition to the groundwater monitoring well recently installed near Building C-17, one groundwater monitoring well and three piezometers are located on the base at Building S-106. Building S-106 is located 0.5 mile southwest of Building C-17 in the foothills of Hominy Hills (Figure 1, page 1-2). Four groundwater monitoring wells were located during the surveying activities on April 22, 1992 (see appendix G). Three of these monitoring wells are located 300 feet northwest of Building C-17 and one is located 250 feet west of Building C-17.

4.2.2 Subsurface Utilities

NWS Earle DPW blueprints were utilized to identify subsurface utilities in the vicinity of Building C-17. Subsurface utilities are shown on Figure 7 (page 2-11). Two six-inch sanitary sewer lines, one six-inch fresh water line, and a 30-inch storm drain line are located within 50 feet of Building C-17. An eight-inch storm drain line and two storm drain catch basins are located within 150 feet of the site. No gas lines have been identified in the vicinity of Building C-17. Depth to the sanitary sewer lines in this area is estimated at 5.5 feet. Depth to the water lines in this area ranges from five to seven feet. Depth to any gas lines on the base is estimated at three feet.

According to DPW blueprints, no underground electrical, cable, or gas lines are located in the vicinity of Building C-17. However, electrical conduits were encountered during the excavation of the diesel delivery line.

4.3 SOILS

The soils in the vicinity of Building C-17 have been mapped as Udorthents, smoothed, by the United States Department of Agriculture, Soil Conservation Service (see Appendix I). This mapping unit consists of areas of excavation and/or fill where little of the original soil profile remains.

The soil excavated during site assessment activities ranged from medium-grained clayey sand to medium- to coarse-grained pebbly sand (see Appendix D). Pieces of brick were found underlying elbows and joints of the diesel delivery line at a number of locations. Two feet of fine- to coarse-grained sand and gravel, six feet of medium-grained sand with a trace of silt, and 15 feet of fine- to medium-grained sand were encountered during the drilling of the borehole for MW-1 (see Appendix F).

4.4 GEOLOGY

NWS Earle is situated in the Atlantic Coastal Plain Physiographic Province. A wedge of unconsolidated Cretaceous and Cenozoic age sands, clays, and marls overlies Precambrian and lower Paleozoic age crystalline bedrock in the Atlantic Coastal Plain. The unconsolidated sediments strike generally northeast-southwest and dip slightly to the southeast at 10 to 60 feet per mile. The sediments thicken seaward from zero at the Fall Line to greater than 6,500 feet near Cape May. The thickness of sediments in the NWS Earle area is estimated at 900 feet. The sediments crop out in a banded pattern that runs roughly parallel to the shoreline. The geologic units identified in the Coastal Plain area of New Jersey are in Table 7 (page 4-4).

Building C-17 is located in or adjacent to the area of outcrop for the Paleocene Vincentown Formation (Figure 12, page 4-5). The Vincentown Formation, in and adjacent to its area of outcrop, consists of two lithofacies, a fine- to coarse-grained, brown and gray, glauconitic quartz sand and a brown, very fossiliferous, glauconitic, clayey quartz calcarenite. The glauconitic quartz sand facies crops out from Ocean to eastern Monmouth Counties; the quartz calcarenite facies crops out from Burlington to Salem Counties. Permeability of the quartz sand facies and the quartz calcarenite facies ranges from moderate to good. Both facies grade rapidly downdip from their respective outcrop areas into finer-grained silts and clays.

The Paleocene Hornerstown Sand stratigraphically underlies the Vincentown Formation. The Hornerstown Sand consists of fine- to coarse-grained, dark green, glauconitic, clayey sand. Permeability in the Hornerstown Sand is poor.

The Upper Cretaceous Tinton Sand stratigraphically underlies the Hornerstown Sand. The Tinton Sand and the underlying Upper Cretaceous Red Bank Sand consist of fine- to coarse-grained, brown and gray, micaceous, glauconitic, clayey quartz sand. Permeability in the Tinton Sand is poor; permeability in the Red Bank Sand ranges from moderate to good.

TABLE 7
GEOLOGIC AND HYDROGEOLOGIC UNITS OF THE COASTAL PLAIN OF NEW JERSEY
UST INVESTIGATION AT BUILDING C-17, NWS EARLE
COLTS NECK, NEW JERSEY

SYSTEM	SERIES	GEOLOGIC UNIT	LITHOLOGY	HYDROGEOLOGIC UNIT	HYDROLOGIC CHARACTERISTICS
Quaternary	Holocene	Alluvial deposits	Sand, silt, and black mud.	Undifferentiated	Surficial material, often hydraulically connected to underlying aquifers. Locally some units may act as confining beds. Thicker sands are capable of yielding large quantities of water.
		Beach sand and gravel	Sand, quartz, light-colored, medium- to coarse-grained, pebbly.		
	Pleistocene	Cape May Formation	Sand, quartz, light-colored, heterogeneous, clayey, pebbly.		
Tertiary	Miocene	Pensauken Formation		Kirkwood-Cohansey aquifer system	A major aquifer system. Ground-water occurs generally under water-table conditions. In Cape May County the Cohansey Sand is under artesian conditions.
		Bridgeton Formation			
		Beacon Hill Gravel	Gravel, quartz, light colored, sandy.		
		Cohansey Sand	Sand, quartz, light-colored, medium to coarse-grained, pebbly; local clay beds.		
		Kirkwood Formation	Sand, quartz, gray and tan, very fine- to medium-grained, micaceous, and dark-colored diatomaceous clay.	confining bed	Thick diatomaceous clay bed occurs along coast and for a short distance inland. A thin water-bearing sand occurs within the middle of this unit.
				Rio Grande w-bz[1]	
				confining bed[2]	
				Atlantic City 800-foot sand	A major aquifer along the coast.
				Composite confining bed	Alloway Clay member or equivalent
	Eocene	Piney Point Formation	Sand, quartz and glauconite, fine- to coarse-grained.	Piney Point aquifer	Yields moderate quantities of water locally.
		Shark River Formation	Clay, silty and sandy, glauconitic, green, gray and brown, fined-grained quartz sand.		Poorly permeable sediments.
		Manasquan Formation			
	Paleocene	Vincentown Formation	Sand, quartz, gray and green, fine- to coarse-grained, glauconitic, and brown clayey, very fossiliferous, glauconite and quartz calcarenite.	Vincentown aquifer	Yields small to moderate quantities of water in and near its outcrop area.
		Hornerstown Sand	Sand, clayey, glauconitic, dark green, fine- to coarse-grained.		Poorly permeable sediments.
Cretaceous	Upper Cretaceous	Tinton Sand	Sand, quartz, and glauconite, brown and gray, fine- to coarse-grained, clayey, micaceous.	Red Bank sand[2]	Yields small quantities of water in and near its outcrop area.
		Red Bank Sand			
		Navesink Formation	Sand, clayey, silty, glauconitic, green and black, medium- to coarse-grained.		Poorly permeable sediments.
		Mount Laurel Sand	Sand, quartz, brown and gray, fine- to coarse-grained, slightly glauconitic.	Wenonah-Mount Laurel aquifer	A major aquifer.
		Wenonah Formation	Sand, very fine- to fine-grained, gray and brown, silty, slightly glauconitic.		
		Marshalltown Formation	Clay, silty, dark greenish gray, glauconitic quartz sand.	Marshalltown-Wenonah confining bed	A leaky confining bed.
		Englishtown Formation	Sand, quartz, tan and gray, fine- to medium-grained; local clay beds.	Englishtown aquifer system	A major aquifer. Two sand units in Monmouth and Ocean Counties.
		Woodbury Clay	Clay, gray and black, micaceous silt.	Merchantville-Woodbury confining bed	A major confining bed. Locally the Merchantville Fm. may contain a thin water-bearing sand.
		Merchantville Formation	Clay, glauconitic, micaceous, gray and black; locally very fine-grained quartz and glauconitic sand.		
		Magothy Formation	Sand, quartz, light-gray, fine- to coarse-grained; local beds of dark-gray lignitic clay.	Potomac-Raritan Magothy aquifer system: upper aquifer	A major aquifer system. In the northern Coastal Plain the upper aquifer is equivalent to the Old Bridge aquifer and the middle aquifer is the equivalent of the Farrington aquifer. In the Dela. River Valley three aquifers are recognized. In the deeper subsurface, units below the upper aquifer are undifferentiated.
		Raritan Formation	Sand, quartz, light-gray, fine- to coarse-grained, pebbly, arkosic, red, white, and variegated clay.	conf bd; middle aquifer; conf bd	
	Lower Cretaceous	Potomac Group	Alternating clay, silt, sand, and gravel.	lower aquifer	
Pre- Cretaceous		Bedrock	Precambrian and lower Paleozoic crystalline rocks, metamorphic schist and gneiss; locally Triassic basalt, sandstone and shale.	Bedrock confining bed	No wells obtain water from these consolidated rocks, except along Fall Line.

[1] Rio Grande water-bearing zone.

[2] ------ Minor aquifer not mapped in this report.

Modified from Seaber, 1965, table 3.

Taken From Zapecza, O.S. Hydrogeologic Framework of the New Jersey Coastal Plain; Regional Aquifer-System Analysis. U.S.G.S. Survey Open-File Report 84-730. 1984.

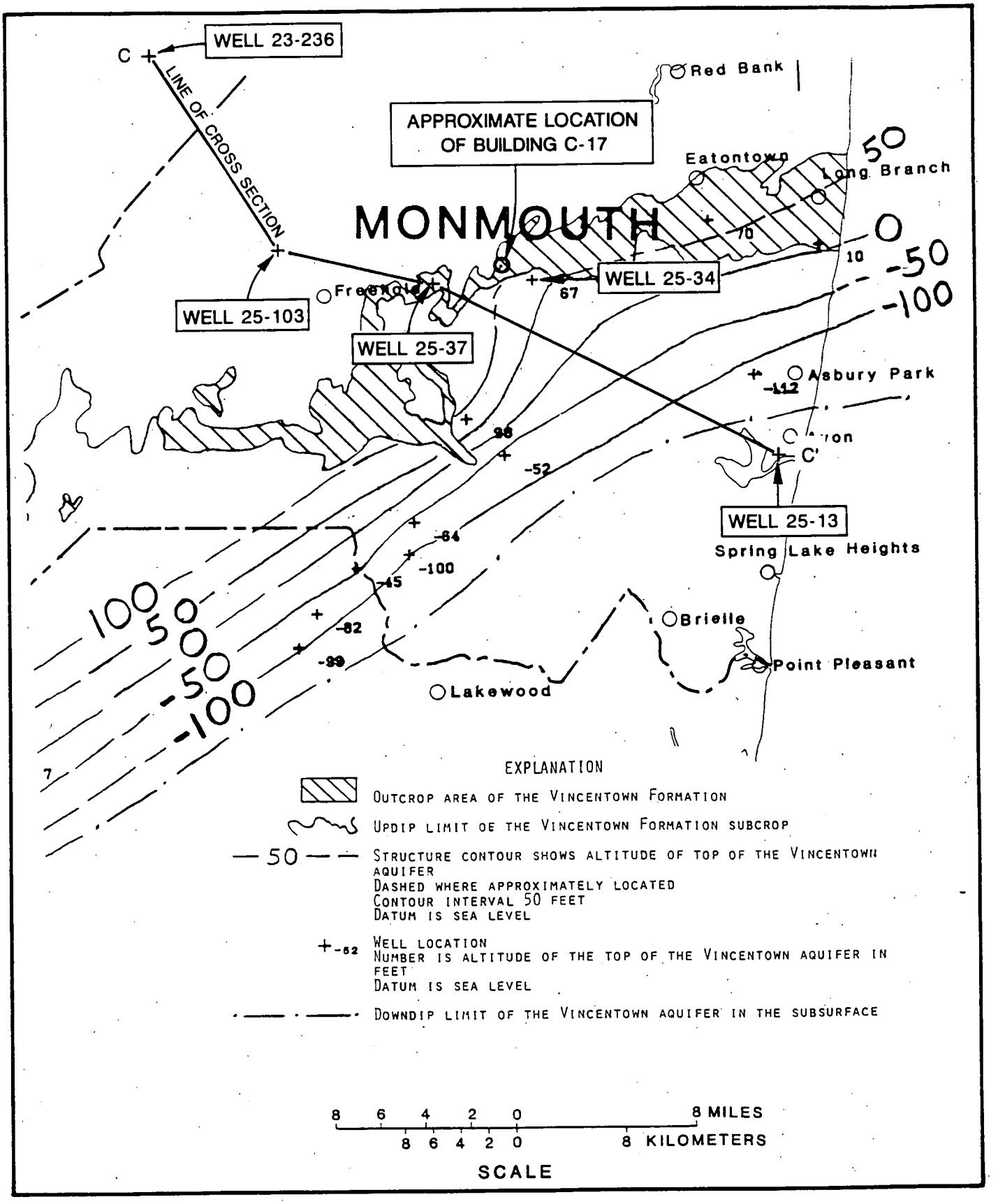

FIGURE: 12

STRUCTURAL CONTOUR MAP FOR VINCENTOWN AQUIFER

UST INVESTIGATION AT BUILDING C-17, NWS EARLE

HALLIBURTON NUS
Environmental Corporation

The Upper Cretaceous Navesink Formation stratigraphically underlies the Red Bank Sand. The Navesink Formation consists of medium- to coarse-grained, green and black, glauconitic, silty clayey sand. Permeability of the sands in the Navesink Formation is poor.

The Upper Cretaceous Mount Laurel Sand stratigraphically underlies the Navesink Formation. The Mount Laurel Sand consists of fine- to coarse-grained, brown and gray, slightly glauconitic quartz sand. Permeability in the Mount Laurel Sand is good.

The Upper Cretaceous Wenonah Formation stratigraphically underlies the Mount Laurel Sand. The Wenonah Formation consists of very fine- to fine-grained, gray and brown, slightly glauconitic sand. Permeability of the sands in the Wenonah Formation is good.

The Upper Cretaceous Marshalltown Formation stratigraphically underlies the Wenonah Formation. The combined outcrop area of the Mount Laurel Sand and Wenonah and Marshalltown Formations is located approximately 7.5 miles northwest of NWS Earle. The Marshalltown Formation consists of dark greenish-gray, glauconitic, silty clay and glauconitic quartz sand. Permeability in the Marshalltown Formation is poor.

The Upper Cretaceous Englishtown Formation stratigraphically underlies the Marshalltown Formation. The outcrop area of the Englishtown Formation is located approximately eight miles northwest of NWS Earle. The Englishtown Formation consists of fine- to medium-grained, tan and gray quartz sand with local clay beds. Permeability of the sands in the Englishtown Formation is good.

The Upper Cretaceous Woodbury Clay stratigraphically underlies the Englishtown Formation. The Woodbury Clay consists of gray and black clay and micaceous silt. Permeability in the Woodbury Clay is very poor.

The Upper Cretaceous Merchantville Formation stratigraphically underlies the Woodbury Clay. The combined outcrop area of the Woodbury Clay and Merchantville Formation is located approximately 10 miles northwest of NWS Earle. The Merchantville Formation consists of gray and black, glauconitic, micaceous clay with locally very fine-grained quartz and glauconitic sand. Permeability in the Merchantville Formation is generally very poor.

The Upper Cretaceous Magothy Formation stratigraphically underlies the Merchantville Formation. The Magothy Formation consists of fine- to coarse-grained, light gray quartz sand with local dark gray, lignitic coal beds. Permeability in the sands of the Magothy Formation is good.

The Upper Cretaceous Raritan Formation stratigraphically underlies the Magothy Formation. The Raritan Formation consists of fine- to coarse-grained, light gray, pebbly sand and red, white, and variegated clay. Permeability in the sands of the Raritan Formation is good.

The Lower Cretaceous Potomac Group, undivided, stratigraphically underlies the Raritan Formation. The combined outcrop area of the Magothy and Raritan Formations and the Potomac Group is located approximately 14 miles northwest of NWS Earle. The Potomac Group consists of alternating clay, silt, sand, and gravel. Permeability in the sands and gravels of the Potomac Group is good.

The Miocene Kirkwood Formation stratigraphically overlies the Vincentown Formation in this portion of the Coastal Plain area. The Kirkwood Formation consists of very fine- to medium-grained, gray and tan, micaceous, quartz sand and dark colored diatomaceous clay. Permeability in the sands of the Kirkwood Formation is good.

The Miocene Cohansey Sand stratigraphically overlies the Kirkwood Formation. The combined outcrop area of the Kirkwood Formation and Cohansey Sand is located just south of Building C-17. The Cohansey Sand consists of medium- to coarse-grained, pebbly, quartz sand with local clay beds. Permeability in the sands of the Cohansey Sand is good.

4.5 HYDROGEOLOGY

4.5.1 Regional Hydrogeology

The hydrogeologic units identified in the Coastal Plain area of New Jersey are in Table 7 (page 4-4). A generalized hydrogeologic cross-section for Monmouth County is in Figure 13 (page 4-8).

Groundwater in the Coastal Plain area occurs in and moves through interconnected primary openings in the unconsolidated sediments. Groundwater recharge is through the infiltration of precipitation, vertical leakage through semi-confining beds, and seepage from surface water bodies. Streams and wells serve as groundwater discharge areas.

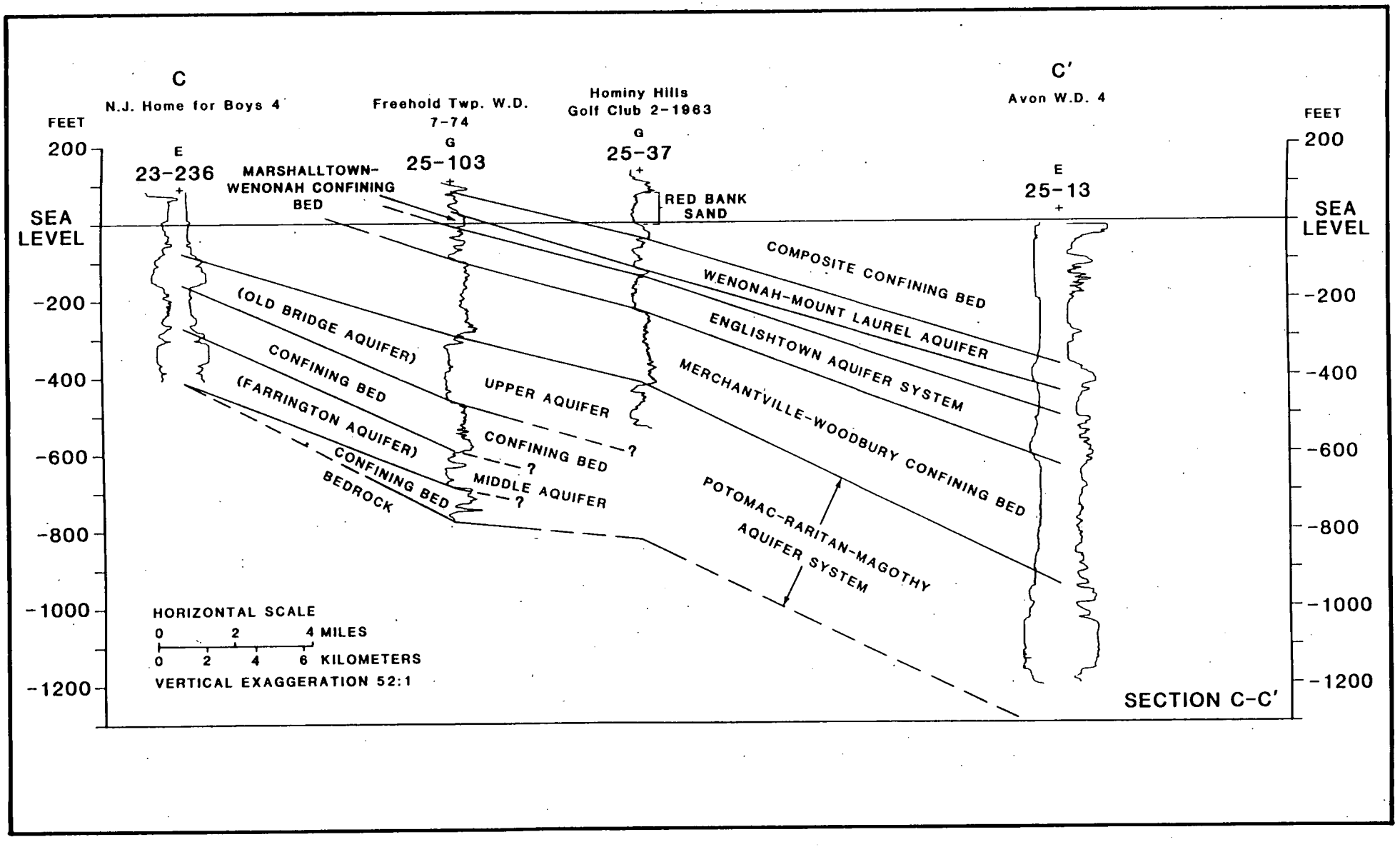

FIGURE: 13

GENERALIZED HYDROGEOLOGIC CROSS SECTION FOR MONMOUTH COUNTY

UST INVESTIGATION AT BUILDING C-17, NWS EARLE

HALLIBURTON NUS
Environmental Corporation

Sediments of the Coastal Plain area of New Jersey are an important source of potable water for the region. In general, the deeper aquifers are used for public water supplies and the shallower aquifers are used for domestic supplies. Fifteen regional hydrogeologic units have been defined by O.Z. Zapecza (1984). Of these, five have been identified in the vicinity of the main base: Kirkwood-Cohansey aquifer system, Vincentown aquifer, Wenonah-Mount Laurel aquifer, Englishtown aquifer system, and Potomac-Raritan-Magothy aquifer system.

The Kirkwood-Cohansey aquifer system is developed in the quartz sand units of the Miocene Kirkwood and Cohansey Formations. Groundwater in this aquifer system is generally under water-table conditions. The Kirkwood-Cohansey aquifer system is underlain by confining beds of the Kirkwood Formation.

The Vincentown aquifer is developed in the sand and calcarenite facies of the Vincentown Formation and has a maximum thickness of 140 feet in Monmouth County. Building C-17 is located in or near the outcrop area of the Vincent Formation. Well 25-34, located approximately 1,400 feet southeast of Building C-17 in the foothills of Hominy Hills (see figure 12), penetrated the top of the Vincentown aquifer at 67 feet above mean sea level; the base was encountered at 29 feet above mean sea level. Well 25-34 has a reported total depth of 837 feet. The Vincentown Formation functions as a semi-confining to confining bed three to 10 miles downdip of its outcrop area. Groundwater in the Vincentown aquifer is generally under confined conditions. The Vincentown aquifer is underlain by the composite confining beds of the Hornerstown, Tinton, and Red Bank Sands and the Navesink Formation.

The Wenonah-Mount Laurel aquifer is developed in the sand units of the Wenonah Formation and the Mount Laurel Sand. Well 25-34 penetrated the top of the Wenonah-Mount Laurel aquifer at 101 feet below mean sea level and the base at 174 feet below mean sea level. Groundwater in this aquifer is generally under confined conditions. The Wenonah-Mount Laurel aquifer is underlain by the composite confining beds of the Marshalltown and Wenonah Formations.

The Englishtown aquifer system is developed in the sand units of the Englishtown Formation. Well 25-34 penetrated the top of the Englishtown aquifer at 205 feet below mean sea level and the base at 295 feet below mean sea level. Groundwater in this aquifer system is generally under confined conditions. The Englishtown aquifer system is underlain by the composite confining beds of the Woodbury Clay and the Merchantville Formation.

The Potomac-Raritan-Magothy aquifer system may be subdivided into upper, middle, and lower aquifers. The upper aquifer is developed in the sand units of the Magothy Formation. Well 25-34 penetrated the top of the upper aquifer at 505 feet below mean sea level. The base of the upper aquifer was not encountered in Well 25-34. Confining beds of the Raritan Formation separate the upper aquifer from the middle aquifer. The middle aquifer is developed in sand units of the Raritan Formation. Confining beds of the Potomac Group separate the middle and lower aquifers. The lower aquifer is developed in the sand units of the Potomac Group. Groundwater in this aquifer system is generally under confined conditions.

4.5.2 Local Hydrogeology

As previously mentioned, Building C-17 is located in or near the outcrop area of the Vincentown Formation. As discussed in section 4.5.1, the Vincentown Formation functions as an aquifer in its outcrop area and within three to 10 miles downdip of the outcrop area. No wells have been identified as producing from the Vincentown aquifer or any other aquifer within one mile of Building C-17.

Groundwater flow beneath the main base is expected to be generally to the east and southeast following local topography. Site-specific information on the direction of groundwater flow in the vicinity of Building C-17 is not available. Based upon topographic observations and the role of streams as discharge points, groundwater flow in the vicinity of Building C-17 should be east and southeast toward a tributary of Hockhockson Brook.

MW-1, located east-southeast of Building C-17, was installed primarily as a groundwater sampling point (Figure 4, page 2-3). MW-1 was completed on February 14, 1992 and was screened in the first significant water-bearing zone encountered during boring. The depth to groundwater in MW-1 was measured at approximately 10 feet below the ground surface.

Verbal information received from the Navy after MW-1 was installed indicates that the groundwater flow direction beneath Building S-106 is to the north. Building S-106 is located 0.5 mile southwest of Building C-17 in the foothills of Hominy Hills. The northward flow direction interpreted from the data obtained from one groundwater monitoring well and three piezometers at Building S-106 is consistent with topographic slope at Building S-106.

5.0 SUMMARY AND RECOMMENDATIONS

Based upon field observations and analytical results from soil sampling, contaminated soils remain beneath and adjacent to the trenches excavated to uncover the subject delivery lines. VO compounds identified in common in soil samples from the diesel and unleaded gasoline delivery line trenches are methylene chloride (up to 2,500 ug/kg J), trichloroethene (up to 220 ug/kg J), tetrachloroethene (up to 310 ug/kg J), toluene (110,000 ug/kg), ethylbenzene (up to 31,000 ug/kg), xylene (total) (up to 510,000 ug/kg E), 1,1,1-trichloroethane (up to 14,000 ug/kg), and benzene (up to 8,700 ug/kg). Up to 532,600 ug/kg of total BTEX was detected in the soil samples. Additionally, acetone (up to 72 ug/kg), 4-methyl-2-pentanone (64,000 ug/kg E), bromodichloromethane (3 ug/kg J), cis-1,3-dichloropropene (6 ug/kg J), bromoform (3 ug/kg J), and 1,1,2,2-tetracholoroethane (5 ug/kg J) were detected in diesel delivery line samples. Carbon tetrachloride (170 ug/kg J) was also detected in an unleaded gasoline delivery line sample.

Tentatively identified VO compounds identified in common in soil samples from the diesel and unleaded gasoline delivery line trenches are C7H14 isomer (up to 13,000 ug/kg J), aliphatic hydrocarbon (up to 194,000 ug/kg J), C9H20 isomer (up to 15,000 ug/kg J), C3-benzene isomer (up to 482,000 ug/kg J), unknowns, and C8H18 isomer (up to 3,800 ug/kg J). Additionally, trimethylcyclohexane isomer (up to 35,700 ug/kg J), C9H18 isomer (up to 20,000 ug/kg J), and C4-benzene isomer (63 ug/kg J) were detected in diesel delivery line samples. Additionally, C8H14 isomer (1,200 ug/kg J), C10H20 isomer (1,600 ug/kg J), and 2-methyl pentane (30,000 ug/kg J) were detected in unleaded gasoline line samples. Methylene chloride (up to 5 ug/kb) was detected in fi ld blanks E-FB-01 and E-FB-02 and rinsate blanks E-RB-01 and E-RB-02. Acetone (14 ug/kg) was detected in E-FB-01. No contaminants were detected in trip blank E-TB-02.

TPH (up to 91,000 mg/kg) was detected in eight of the 13 samples taken in the diesel delivery line trench. Lead was detected in all of the diesel delivery line samples (up to 4.40 mg/kg) and in field blank E-FB-01 (1.10 mg/kg) and rinsate blank E-RB-01 (2.20 mg/kg). TPH (up to 4,100 mg/kg) and lead (up to 195.00 mg/kg) were detected in the seven unleaded gasoline delivery line samples.

Methylene chloride (38 ug/l) and bis(2-ethylhexyl) phthalate (6 ug/l J) were detected in sample MW-1. Chloroform was detected at 4 ug/l in sample MW-01 and duplicate sample MW-01D. Blanks E-FB-03 and E-RB-03 were taken in conjunction with groundwater samples. Methylene chloride (up to 6 ug/l B) was detected in E-FB-03 and E-RB-03. Octadecanoic acid, butyl ester (7 ug/l J) was detected in E-FB-03, along with tentatively identified VO and semivolative organic unknowns (9 ug/l J and up to 13 ug/l J, respectively) and a tentatively identified VO aliphatic hydrocarbon (5 ug/l J). No MTBE or TBA were detected in the groundwater samples or associated blanks.

The areal extent of contamination near Building C-17 should be addressed as soon as practical. HALLIBURTON NUS recommends that a soil gas survey be conducted to aid in the determination of the areal extent of soil contamination and to investigate the possibility of a contaminated groundwater plume. Based upon the results of the soil gas survey, a limited soil-boring and temporary well program should be conducted to identify and quantify the nature of the contamination. Finally, based upon these results, HALLIBURTON NUS recommends that three additional shallow groundwater monitoring wells be installed around the tank system located near Building C-17 to document the site-specific groundwater flow direction and to further evaluate groundwater conditions in the area.

Let's protect our earth

DSS5/90

State of New Jersey
DEPARTMENT OF ENVIRONMENTAL PROTECTION
DIVISION OF WATER RESOURCES
CN 029
Trenton, N.J. 08625-0029

Office of
the Director

(609) 292-1637
Fax # (609) 984-7938

DICAR SUMMARY SHEET for Case # 91-5-15-0941-14

Fill in "Yes", "No", "N/A" (non-applicable) or "U" (unknown) after each completed statement and the appropriate response after each uncompleted statement. Explain any "U" or "N/A" responses.

1.) The substance(s) discharged was (were) diesel and unleaded gasoline

2.) The highest ground water contamination at any 1 sampling location and at any 1 sampling event to date has been determined to be:

a.) 0 ppb total BTEX, 38 ppb total non-targeted VOC
b.) 6 ppb total B/N, 155 ppb total non-targeted B/N
c.) 0 ppb MTBE, 0 ppb TBA
d.) 4 ppb chloroform (for non-petroleum substance)
e.) greatest thickness of separate phase product found 0
f.) separate phase product has been delineated N/A

3a.) A well search (including a review of manual well records) indicates that private, municipal or commercial wells do exist within the distances specified in the Scope of Work. No
b.) The number of these wells identified is N/A .
4a.) The shallowest depth of any well noted in the well search which may be in the horizontal or vertical potential path (s) of the contaminant plume(s) is N/A feet below grade (consideration has been given for the effects of pumping, subsurface structures, etc. on the direction(s) of contaminant migration). This well is N/A feet from the source and its screening begins at a depth of N/A feet.
b.) The shallowest depth to the top of the well screen for any well in the potential path of the plume(s) (as described in #4a above) is N/A feet below grade. This well is located N/A feet from the source.
c.) The closest horizontal distance of a private, commercial or municipal well in the potential path of the plume (as determined in #4a) is N/A feet from the source. This well is N/A feet deep and screening begins at a depth of N/A feet.

5.) A plan for separate phase product recovery has been included. N/A

6.) A ground water contour map has been submitted which includes the ground water elevations for each well. No

(OVER)

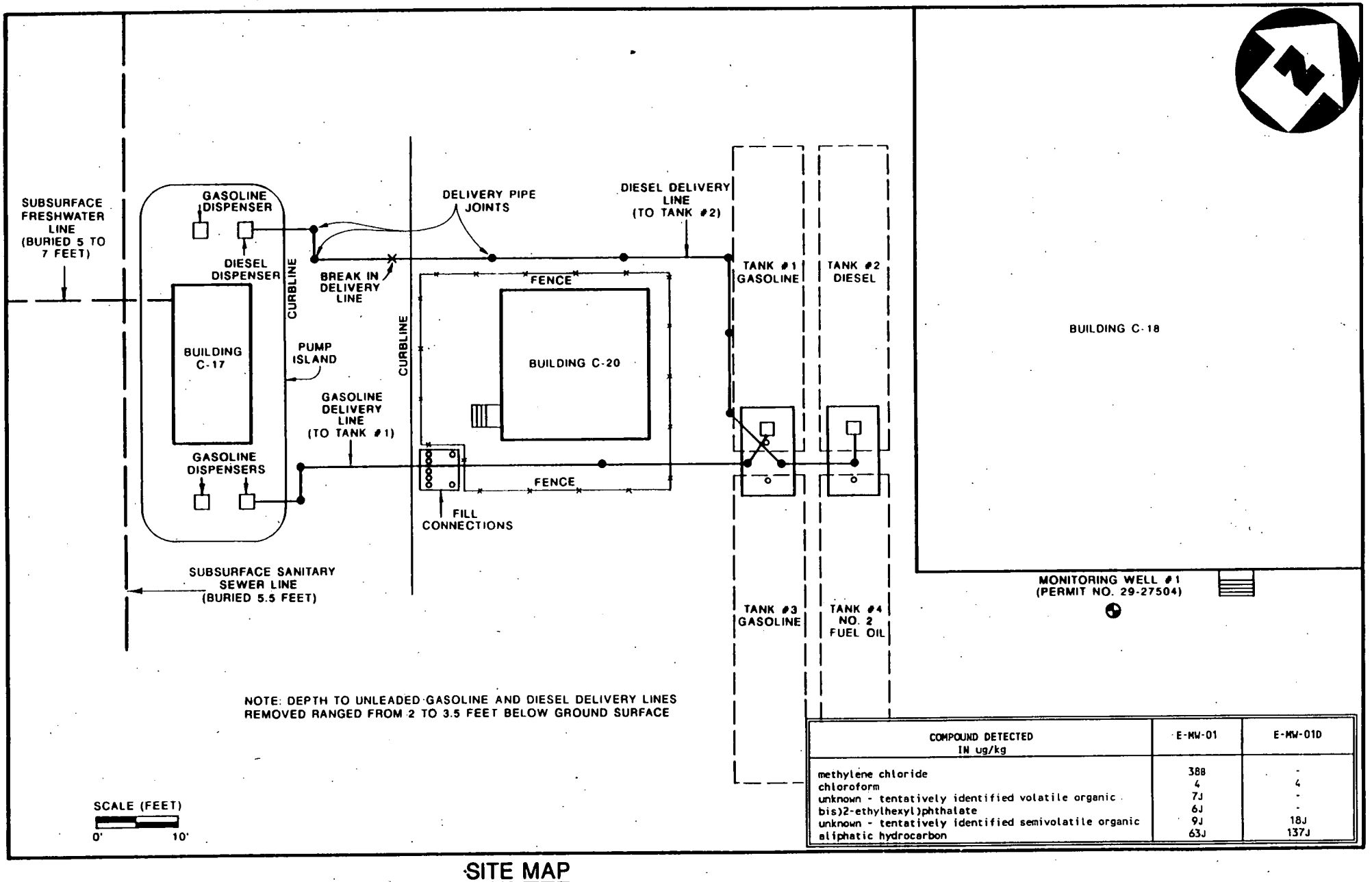

COMPOUND DETECTED IN ug/kg	E-MW-01	E-MW-01D
methylene chloride	388	-
chloroform	4	4
unknown - tentatively identified volatile organic	7J	-
bis)2-ethylhexyl)phthalate	6J	-
unknown - tentatively identified semivolatile organic	9J	18J
aliphatic hydrocarbon	63J	137J

SITE MAP

DISCHARGE INVESTIGATION & CORRECTIVE ACTION REPORT

UST INVESTIGATION AT BUILDING C-17, NWS EARLE

HALLIBURTON NUS
Environmental Corporation

HALLIBURTON NUS
Environmental Corporation

999 WEST VALLEY ROAD WAYNE, PENNSYLVANIA 19087 (215) 971-0900

HPNH/51-4-2-154

April 29, 1992

Project Number 3916-04

Bureau of Underground Storage Tanks
New Jersey Department of Environmental Protection and Energy
CN-029, 401 East State Street
Trenton, New Jersey 08625-0029

Attention: Tank Management Section

Reference: CLEAN Contract No. N62472-90-D-1298
Contract Task Order (CTO) 0031

Subject: Attachment for DICAR Summary Sheet for Case No. 91-5-15-0941-14
Underground Storage Tank (UST) Investigation at Building C-17
NWS Earle
Colts Neck, New Jersey

Dear Sir or Madam:

The following explanations are for those items answered "No," "U" (unknown), or "N/A" (not applicable) on the subject DICAR Summary Sheet.

2f. Based on groundwater sampling analyses, separate-phase product has not been identified in groundwater.

3a. and b.
and 4a.,b.,
and c. No private, municipal or commercial wells were identified during the microfilm search or well radius program within the distances specified in the Scope of Work.

5. Based upon groundwater sampling analyses, separate-phase product has not been identified, so a separate-phase product recovery plan has not been included.

6. Only one well is located near the tanks; therefore, a groundwater contour map could not be constructed.

7. No vapor hazards have been identified in the vicinity of Building C-17.

8a., b.,
and c. A groundwater plume has not been identified at this site because groundwater sampling has not identified separate-phase product.

10g. No surface water bodies are located adjacent to Building C-17.

11a. Free-product-contaminated soils are believed to be present in the vicinity of Building C-17 and may exist both above and below the water table. Because of the limited funding for the excavation subcontract, the vertical and horizontal extent of soil contamination could not be determined.

11c. Free-product-contaminated soils are not suspected to cross property boundaries b cause Building C-17 is located 0.6 mile southeast of the nearest property boundary line. It is unlikely that the free product has migrated northwest toward this property boundary line.

Please contact me at the number above if you have any questions.

Respectfully,

Jill Hartnell

Jill Hartnell, CPG 8344
Project Manager

JH/syh

Attachments

cc: John Trepanowski, P.E .(HALLIBURTON NUS) (without attachment)
Debra Wroblewski (HALLIBURTON NUS) (without attachment)
Patricia Patton (HALLIBURTON NUS) (without attachment)
File (with attachment)

State of New Jersey
DEPARTMENT OF ENVIRONMENTAL PROTECTION
Division of Water Resources
CN-029
Trenton, New Jersey 08625

UST #-	9439
CK. IN.	
AMT.	☐
AUTH.	☐
SP. ROUTE	☐
SITE PLN.	☐
SIGN.	☐
COMCODE	

UNDERGROUND STORAGE TANK REGISTRATION QUESTIONNAIRE

Bureau of Ground Water Quality Management
Underground Storage Tank Section
(609)984-9736

COMPLIANCE WITH THIS REGISTRATION WILL MEET ALL REGISTRATION REQUIREMENTS OF THE FEDERAL LAW, P.L. 93-616, THE HAZARDOUS AND SOLID WASTE AMENDMENTS OF 1984, SUBTITLE 1, SECTIONS 9001-9010.

General Facility Information

1. Facility name: NAVAL WEAPONS STATION EARLE
2. Facility location:
   NUMBER AND STREET
   COLTS NECK
   CITY OR MUNICIPALITY
   MONMOUTH (COUNTY) NJ (STATE) 07722 (ZIP CODE)
3. Owner's mailing address:
   NUMBER AND STREET
   COLTS NECK
   CITY OR MUNICIPALITY
   MONMOUTH (COUNTY) NJ (STATE) 07722 (ZIP CODE)
4. Owner's name: UNITED STATES NAVY
5. Contact person (Facility Operator) WILLIAM T MATTHAEY
   PERSON OR TITLE
6. Contact telephone number: 201 (AREA CODE) 577 (EXCHANGE) 2146 (NUMBER)
7. Total number of facility underground storage tanks: 0026 (Complete Questions 12 thru 33 for each tank)
8. Total facility underground storage tank capacity (gallons): 016757 5 +
9. Type and status of owner (mark all that apply).
   A. ☐ CURRENT B. ☐ FORMER C. ☐ STATE OR LOCAL GOVERNMENT D. ☐ PRIVATE OR CORPORATE E. ☐ OWNERSHIP UNCERTAIN F. ☒ FEDERAL GOV (GSA FACILITY I.D. NUMBER) N.J.-1700-2217
10. Two copies of a site plan are submitted with this registration. A. ☒ YES B. ☐ NO
    SK-1973-F
    Submit two (2) copies of SITE PLAN showing facility or property boundary, buildings and the location of ALL underground storage tanks. EITHER, an existing engineering site plan, if available, OR a neat and legible hand-drawn sketch of the site may be submitted. In either case the site plan or sketch MUST show the location and distances that tanks, buildings, and dispensers are from the facility's property boundary. Include all tanks that are operating or existing, (E); abandoned, (A); or closed, (C). Each underground tank on the site plan or sketch shall be numbered in accordance with the instructions for question 12. The number assigned to a tank on the site plan or sketch MUST match and be identical to the tank identification number assigned to that tank on this form.

INCLUDE FACILITY NAME, OWNER'S NAME, FACILITY ADDRESS AND TELEPHONE NUMBER ON ALL SITE PLANS

11. All underground tanks used after January 1, 1974 including those taken out of operation, **(UNLESS THE TANK WAS REMOVED FROM THE GROUND)** must be included in this registration. All in-ground tanks shall be reported as underground tanks on this questionnaire regardless of their current status; Existing, E; Abandoned, A; or Closed C.

SPECIFIC TANK INFORMATION

	TANK NO.	TANK NO.	TANK NO.	TANK NO.	TANK NO.
12. Tank Identification Number	C141	C201	C202	C203	C204
13. CASRN Number (Hazardous Substances Only)					
14. Tank Age (Years)	24	10	01	01	01
15. Tank Size (gallons)	002000	010000	012000	012000	012000
16. Tank Contents (MARK ONE X)					
A. Leaded gasoline	☐	☐	☐	☐	☐
B. Unleaded gasoline	☐	X	X	X	☐
C. Alcohol enriched gasoline	☐	☐	☐	☐	☐
D. Light diesel fuel (No. 1-D)	☐	☐	☐	☐	☐
E. Medium diesel fuel (No. 2-D)	☐	☐	☐	X	☐
F. Waste oil	X	☐	☐	☐	☐
G. Kerosene (No. 1)	☐	☐	☐	☐	☐
H. Home heating oil (No. 2)	☐	☐	☐	☐	X
J. Heating oil (No. 4)	☐	☐	☐	☐	☐
K. Heavy heating oil (No. 6)	☐	☐	☐	☐	☐
L. Aviation fuel	☐	☐	☐	☐	☐
M. Hazardous substances (per Fact Sheet)	☐	☐	☐	☐	☐
N. Other: Please Specify					

17. Tank and Piping Construction (MARK ALL THAT APPLY X)	Tank	Piping	Tank	Piping	Tank	Piping	Tank	Piping	Tank	Piping
Bare steel	☐	X	☐	X	☐	X	☐	☐	☐	☐
B. Carbon steel	☐	☐	☐	☐	☐	☐	☐	☐	☐	☐
C. Stainless steel	☐	☐	☐	☐	☐	☐	☐	☐	☐	☐
D. Aluminum	☐	☐	☐	☐	☐	☐	☐	☐	☐	☐
E. Polyvinyl chloride	☐	☐	☐	☐	☐	☐	☐	☐	☐	☐
F. Concrete	☐	☐	☐	☐	☐	☐	☐	☐	☐	☐
G. Bronze	☐	☐	☐	☐	☐	☐	☐	☐	☐	☐
H. Earthen walls	☐	☐	☐	☐	☐	☐	☐	☐	☐	☐
J. Fiberglass reinforced plastic	☐	☐	X	☐	☐	X	☐	X	☐	X
K. Fiberglas-clad steel	☐	☐	☐	☐	X	☐	X	☐	X	☐
L. Painted/asphalt steel	X	☐	☐	☐	☐	☐	☐	☐	☐	☐
M. Vaulted	☐	☐	☐	☐	☐	☐	☐	☐	☐	☐
N. Composite	☐	☐	☐	☐	☐	☐	☐	☐	☐	☐
P. Iron (cast or ductile)	☐	☐	☐	☐	☐	☐	☐	☐	☐	☐
R. Non-metallic	☐	☐	☐	☐	☐	☐	☐	☐	☐	☐
S. Other; Please Specify										

18. Tank and Piping Structure (MARK ALL THAT APPLY X)	Tank	Piping	Tank	Piping	Tank	Piping	Tank	Piping	Tank	Piping
A. Single wall	X	X	X	X	X	X	X	X	X	X
B. Double wall	☐	☐	☐	☐	☐	☐	☐	☐	☐	☐
C. Manway in tank	☐		X		X		X		X	

19. Internal Tank and Piping Lining (MARK ONE X)	Tank	Piping	Tank	Piping	Tank	Piping	Tank	Piping	Tank	Piping
A. Rubber	☐	☐	☐	☐	☐	☐	☐	☐	☐	☐
B. Epoxy	☐	☐	☐	☐	☐	☐	☐	☐	☐	☐
C. Alklyd	☐	☐	☐	☐	☐	☐	☐	☐	☐	☐
D. Phenolic	☐	☐	☐	☐	☐	☐	☐	☐	☐	☐
E. Glass	☐	☐	☐	☐	☐	☐	☐	☐	☐	☐
F. Clay	☐	☐	☐	☐	☐	☐	☐	☐	☐	☐
G. None	X	X	X	X	X	X	X	X	X	X

UST NO. 9439

Tank I.D. No.	TANK NO. C141		TANK NO. C2b1		TANK NO. C2b2		TANK NO. C2b3		TANK NO. C2b4	
Tank and Piping Lining installed (MARK ONE X)	Tank	Piping	Tank	Piping	Tank	Piping	Tank	Piping	Tank	Piping
A. At purchase of tank	☐	☐	☐	☐	☐	☐	☐	☐	☐	☐
B. Retrofitted	☐	☐	☐	☐	☐	☐	☐	☐	☐	☐
21. Secondary containment (MARK ALL THAT APPLY X)	Tank	Piping	Tank	Piping	Tank	Piping	Tank	Piping	Tank	Piping
A. Liner	☐	☐	☐	☐	☐	☐	☐	☐	☐	☐
B. Vault	☐	☐	☐	☐	☐	☐	☐	☐	☐	☐
C. Double wall	☐	☐	☐	☐	☐	☐	☐	☐	☐	☐
D. None	☒	☒	☒	☒	☐	☐	☐	☐	☐	☐
E. Other, Please Specify										
22. External Type/Application of Cathodic Protection (MARK ALL THAT APPLY X)	Tank	Piping	Tank	Piping	Tank	Piping	Tank	Piping	Tank	Piping
A. Wrapped	☐	☐	☐	☐	☐	☐	☐	☐	☐	☐
B. Sprayed	☐	☐	☐	☐	☐	☐	☐	☐	☐	☐
C. Sacrificial anode	☐	☐	☐	☐	☐	☐	☐	☐	☐	☐
D. Impressed current	☐	☐	☐	☐	☐	☐	☐	☐	☐	☐
E. None	☒	☒	☐	☐	☐	☐	☐	☐	☐	☐
F. Other, Please Specify										
23. Monitoring/detection method (MARK ALL THAT APPLY X)	Tank	Piping	Tank	Piping	Tank	Piping	Tank	Piping	Tank	Piping
A. Automatic sampling	☐	☐	☐	☐	☐	☐	☐	☐	☐	☐
B. Manual sampling	☒	☐	☒	☐	☒	☐	☒	☐	☒	☐
C. Ground water monitoring	☐	☐	☐	☐	☐	☐	☐	☐	☐	☐
D. System in secondary containment	☐	☐	☐	☐	☐	☐	☐	☐	☐	☐
E. System outside backfill	☐	☐	☐	☐	☐	☐	☐	☐	☐	☐
F. System within piping (piping leak detector)	☐	☐	☐	☐	☐	☐	☐	☐	☐	☐
G. None	☐	☒	☐	☒	☐	☒	☐	☒	☐	☒
24. Type of monitoring/detection system (MARK ALL THAT APPLY X)	Tank	Piping	Tank	Piping	Tank	Piping	Tank	Piping	Tank	Piping
A. Continuous	☐	☐	☐	☐	☐	☐	☐	☐	☐	☐
B. Event activated	☐	☐	☐	☐	☒	☒	☒	☒	☒	☒
C. Audio	☐	☐	☐	☐	☐	☐	☐	☐	☐	☐
D. Visual	☐	☐	☐	☐	☐	☐	☐	☐	☐	☐
E. Electric sensor	☐	☐	☐	☐	☐	☐	☐	☐	☐	☐
F. Stock/inventory control (manual)	☒	☒	☒	☒	☐	☐	☐	☐	☐	☐
G. Stock/inventory control (electronic)	☐	☐	☐	☐	☒	☒	☒	☒	☒	☒
H. Tile drain	☐	☐	☐	☐	☐	☐	☐	☐	☐	☐
J. Vapor sniff wells	☐	☐	☐	☐	☐	☐	☐	☐	☐	☐
K. Internal inspection	☐	☐	☐	☐	☐	☐	☐	☐	☐	☐
L. Other, Please Specify										
M. None	☐	☐	☐	☐	☐	☐	☐	☐	☐	☐
25. Testing history recorded (MARK ALL THAT APPLY X)										
A. Yes	☐	☐	☐	☐	☐	☐	☐	☐	☐	☐
B. No	☒	☒	☒	☒	☒	☒	☒	☒	☒	☒
C. Test Result (MARK IF LEAKING NOW)	☐	☐	☐	☐	☐	☐	☐	☐	☐	☐
26. Leak/spill occurrence (MARK ALL THAT APPLY X)										
A. Within the past 1 year	☐	☐	☐	☐	☐	☐	☐	☐	☐	☐
B. Within the past 1 to 5 years	☐	☐	☐	☐	☐	☐	☐	☐	☐	☐
C. More than 5 years ago	☐	☐	☐	☐	☐	☐	☐	☐	☐	☐
D. No Records	☐	☐	☐	☐	☐	☐	☐	☐	☐	☐

Tank I.D. No.	TANK NO. C 1 4 1	TANK NO. C 2 0 1	TANK NO. C 2 0 2	TANK NO. C 2 0 3	TANK NO. 9 4 C 9 0 6
Tank Status (MARK ONE X)					
A. Active (operational)	☐	☒	☒	☒	☐
B. Inactive (non-operational)	☐	☐	☐	☐	☐
C. Closed (temporarily out-of-service)	☐	☐	☐	☐	☐
D. Closed (permanently out-of-service)	☒	☐	☐	☐	☐
E. Abandoned, in place	☐	☐	☐	☐	☐
F. Abandoned, in place, filled only	☐	☐	☐	☐	☐
G. Abandoned, in place, sealed only	☐	☐	☐	☐	☐
H. Abandoned, in place, filled and sealed	☐	☐	☐	☐	☐
J. Seasonal	☐	☐	☐	☐	☐
K. Prior retrofitting work, Please Specify					
L. Other, Please Specify					
28. Spill recovery system on-site (MARK ONE X)					
A. Yes	☐	☒	☒	☒	☒
B. No	☒	☐	☐	☐	☐
29. Overfill protection (tank only) (MARK ONE X)					
A. Yes	☐	☐	☐	☐	☐
B. No	☒	☐	☐	☐	☐
30. Emergency shut-off mechanisms (dispensers) (MARK ONE X)					
A. Yes	☐	☐	☐	☐	☐
B. No	☒	☐	☐	☐	☐

* SEE BELOW

* If boxes 27 E, F, G or H above have been answered - answer questions 31, 32 and 33 below.

31. Substance last used in tank (MARK ONE X)					
A. Leaded gasoline	☐	☐	☐	☐	☐
B. Unleaded gasoline	☐	☐	☐	☐	☐
C. Alcohol enriched gasoline	☐	☐	☐	☐	☐
D. Light diesel fuel (No. 1-D)	☐	☐	☐	☐	☐
E. Medium diesel fuel (No. 2-D)	☐	☐	☐	☐	☐
F. Waste oil	☒	☐	☐	☐	☐
G. Kerosene (No. 1)	☐	☐	☐	☐	☐
H. Home heating oil (No. 2)	☐	☐	☐	☐	☐
J. Heating oil (No. 4)	☐	☐	☐	☐	☐
J. Heavy heating oil (No. 6)	☐	☐	☐	☐	☐
K. Aviation fuel	☐	☐	☐	☐	☐
L. Hazardous substances (per Fact Sheet)	☐	☐	☐	☐	☐
M. Other, Please Specify					
32. Estimated date last used (month/year)	1 2 8 5 Mo. Yr.	Mo. Yr.	Mo. Yr.	Mo. Yr.	Mo. Yr.
33. Estimated quantity (gallons) left in tank					

OWNER OR OWNER'S AGENT CERTIFICATION

I certify under penalty of law that I have personally examined and n familiar with th information submitted in this and all attached documents, and that based on my inquiry of those individuals immediately responsible for obtaining the information, I believe that the submitted informati n is true, accurate, and complete.

William T. Matthews
(SIGNATURE)

WILLIAM T. MATTHEWS
(PRINT OR TYPE NAME)

ENVIRONMENTAL ENGINEER
(TITLE)

DEPARTMENT OF THE NAVY
NAVAL WEAPONS STATION EARLE
COLTS NECK, NEW JERSEY 07722-5000

IN REPLY REFER TO

5090
096/jp
3 OCT 1991

New Jersey Department of Environmental Protection
Division of Water Resources
Bureau of Underground Storage Tanks
CN-029
Trenton, N.J. 08625
Attn: Mr. Steven Tator

RE: Case #91-5-15-0941-14: UST #0151003

Gentlemen:

Two (2) Underground Storage Tank Systems located adjacent to C-17 will undergo a major repair as defined by NJSA 7:148-5.3 and 10.5. Approximately 200 linear feet of single wall discharge pipe will be replaced by double wall FRP with leak detection, enclosure (1). The UST sizes and substance stored are as follows:

Tank #1-unleaded gas: 10,000 gallons
Tank #2-diesel fuel: 12,000 gallons

Within the excavation, soil samples shall be taken at every 15 feet and at all elbows and joints in the piping system. Fourteen samples will be taken and the locations of the samples are shown in enclosure (2). The samples shall be analyzed for volatile organics's (VOA+15), zylene, lead and total petroleum hydrocarbon content (TPHC) using EPA method 418.1 by an NJDEP certified laboratory. Should the TPHC levels exceed 100ppm, the laboratory shall test 25% of the samples (about 4 samples) for base nuetrals (B/N +15) beginning with the samples having the highest TPHC levels according to EPA method 8.50.

All excavated contaminated soil shall be placed on top of 6 mil thick plastic sheets along the existing pipe route. Six mil plastic sheets shall be applied to cover the soil from weather and held down by masonry blocks.

Excavated contaminated soil shall be sampled according to NJDEP's Appendix 10 recommendations and analyzed for TCLP, Ignitability, Corrosivity, Total PCB's, Reactivity, and TPHC. The excavated contaminated soil shall be disposed of in accordance with 40 CFR 260-267 regulations.

The draining, removal, and disposal of pipe shall be in accordance with API Recommended Practice 1604. NWS Earle's Safety Department shall monitor all excavation activities with an explosimeter.

Approximately 2 weeks following the receipt of a closure permit by NWS Earle, the excavation shall take place. Approximately three days later, FRP piping shall be installed

The entire construction project shall be completed in one week to ten days. Following the completion of the project, NWS Earle shall submit to your office a Standard Reporting Form and an Annual Certification UST Registration Questionaire to update UST records at NWS Earle.

Approximately 2-3 weeks after the completion of the construction project, ground monitoring well installation shall take place at the recommendation of the NJDEP. The well shall be installed in accordance with all NJDEP Regulatory Standards and Specifications. The location of the well shall be at the Case Reviewers'discretion. Within 2-3 days, water samples shall be taken from the well in accordance with NJDEP guidelines found in the FIELD PROCEDURES MANUAL for WATER DATA ACQUISITION or the FIELD SAMPLING PROCEDURES MANUAL. The ground water samples shall be analyzed for:

EPA Method 624 + 15 including calibration for xylenes, methyl tertiary butyl ether (MTBE), and tertiary butyl alcohol (TBA).

EPA Method 625 + 15

The analytical results of soil and ground water samples shall be sent to your office for review and comment.

Should you have any questions, please contact John Pawlus, Environmental Engineer, at (908) 577-2515.

Sincerely,

J. J. DILL
Lieutenant Commander, CEC, U.S. Navy
Public Works Officer

Encl: (1) Piping schematic
(2) Sampling locations
(3) Site Plan
(4) UST Closure Plan Approval Application
(5) $170.00 Permit Application Fee

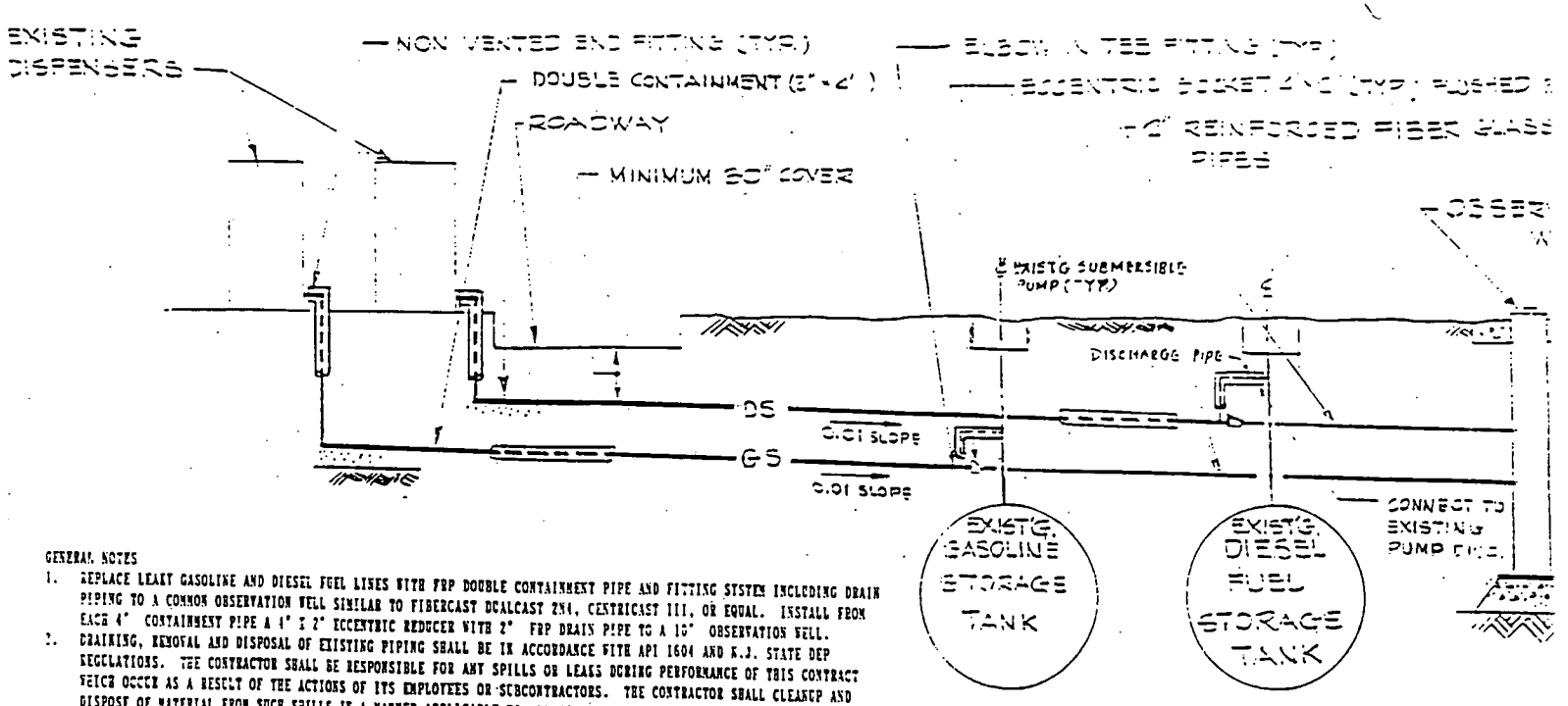

PIPING SCHEMATIC

NO SCALE.

GENERAL NOTES

1. REPLACE LEAKY GASOLINE AND DIESEL FUEL LINES WITH FRP DOUBLE CONTAINMENT PIPE AND FITTING SYSTEM INCLUDING DRAIN PIPING TO A COMMON OBSERVATION WELL SIMILAR TO FIBERCAST DUALCAST 2N4, CENTRICAST III, OR EQUAL. INSTALL FROM EACH 4" CONTAINMENT PIPE A 4" X 2" ECCENTRIC REDUCER WITH 2" FRP DRAIN PIPE TO A 10" OBSERVATION WELL.
2. DRAINING, REMOVAL AND DISPOSAL OF EXISTING PIPING SHALL BE IN ACCORDANCE WITH API 1604 AND N.J. STATE DEP REGULATIONS. THE CONTRACTOR SHALL BE RESPONSIBLE FOR ANY SPILLS OR LEAKS DURING PERFORMANCE OF THIS CONTRACT WHICH OCCUR AS A RESULT OF THE ACTIONS OF ITS EMPLOYEES OR SUBCONTRACTORS. THE CONTRACTOR SHALL CLEANUP AND DISPOSE OF MATERIAL FROM SUCH SPILLS IN A MANNER APPLICABLE TO ALL FEDERAL, STATE AND LOCAL LAWS.
3. CONTRACTOR SHALL NOT START EXCAVATION UNTIL NOTIFIED BY THE CONTRACTING OFFICER AFTER RECEIPT OF PERMIT ISSUED BY N.J. DEP. ALL GROSSLY CONTAMINATED EXCAVATED SOIL SHALL BE LAID ON TOP OF 6 MIL THICK PLASTIC SHEETS ALONG THE EXISTING PIPE ROUTE OR AS DIRECTED BY THE CONTRACTING OFFICER. 6 MIL THICK PLASTIC SHEETS SHALL BE APPLIED TO COVER THE SOIL FROM WEATHER AND HELD DOWN BY MASONRY BLOCKS. GROSSLY CONTAMINATED SOIL SHALL BE IDENTIFIED BY THE CONTRACTING OFFICER IN CHARGE IN ACCORDANCE TO APPENDIX 10 OF SEPTEMBER 1990 N.J. DEP SOIL SAMPLING AND ANALYSIS REQUIREMENTS APPENDIX 1. GROSSLY CONTAMINATED SOIL SHALL NOT BE USED AS BACKFILL MATERIAL.
4. OBSERVATION WELL SHALL BE 10" FIBERGLASS PIPE, 5'-0" LONG WITH FIBERGLASS CAPPED BOTTOM. RAVEN INDUSTRY FILLWELL #54791 WITH #54788 THREADED VENT COVER. BOTTOM CAP AND FILLWELL JOINT ADHESIVE SHALL BE BY THE SAME MANUFACTURER AS THE PIPE FITTINGS AND SHALL BE OF THE SAME RESIN SYSTEM.
5. PIPING SHALL BE PROVIDED WITH MINIMUM 6" COMPACTED SAND BEDDING AND EXTENDED 6" TO TOP AND ALL AROUND PIPES AS PER MANUFACTURER'S RECOMMENDATIONS. MINIMUM 30" CERTIFIED CLEAN BACKFILL SHALL BE PROVIDED ON TOP OF PIPE TO GRADE THROUGHOUT.
6. ALL PIPE FITTINGS SHALL BE FACTORY ASSEMBLED AS A SINGLE UNIT. PIPE GUIDES, EXPANSION JOINTS, THRUST SUPPORT AND ANCHORS SHALL BE PER MANUFACTURER'S RECOMMENDATIONS. INNER CARRIER PIPE SHALL BE TESTED WITH WATER PRESSURE 1-1/2 TIMES THE MAXIMUM (PUMP SHUT-OFF HEAD) PRESSURE AND PER API STANDARDS. OUTER PIPE SHALL BE TESTED BY FILLING WITH WATER FOR 24 HOURS OR AS RECOMMENDED BY THE MANUFACTURER.
7. HAND EXCAVATE IN CONGESTED AREAS AS REQUIRED (DO NOT DISTURB EXISTING PIPELINES).
8. BACKFILL SHALL BE COMPACTED ACCORDING TO THE MANUFACTURER'S SPECIFICATIONS.
9. REPLACE CONCRETE ROADWAY AND CURB WITH 3000 PSI CONCRETE.
10. ALL CUTTING AND DRILLING SHALL BE BY NON-SPARKING TOOLS.

ENCLOSURE #1

GILL & GASSMAN
CONSULTING ENGINEERS PC

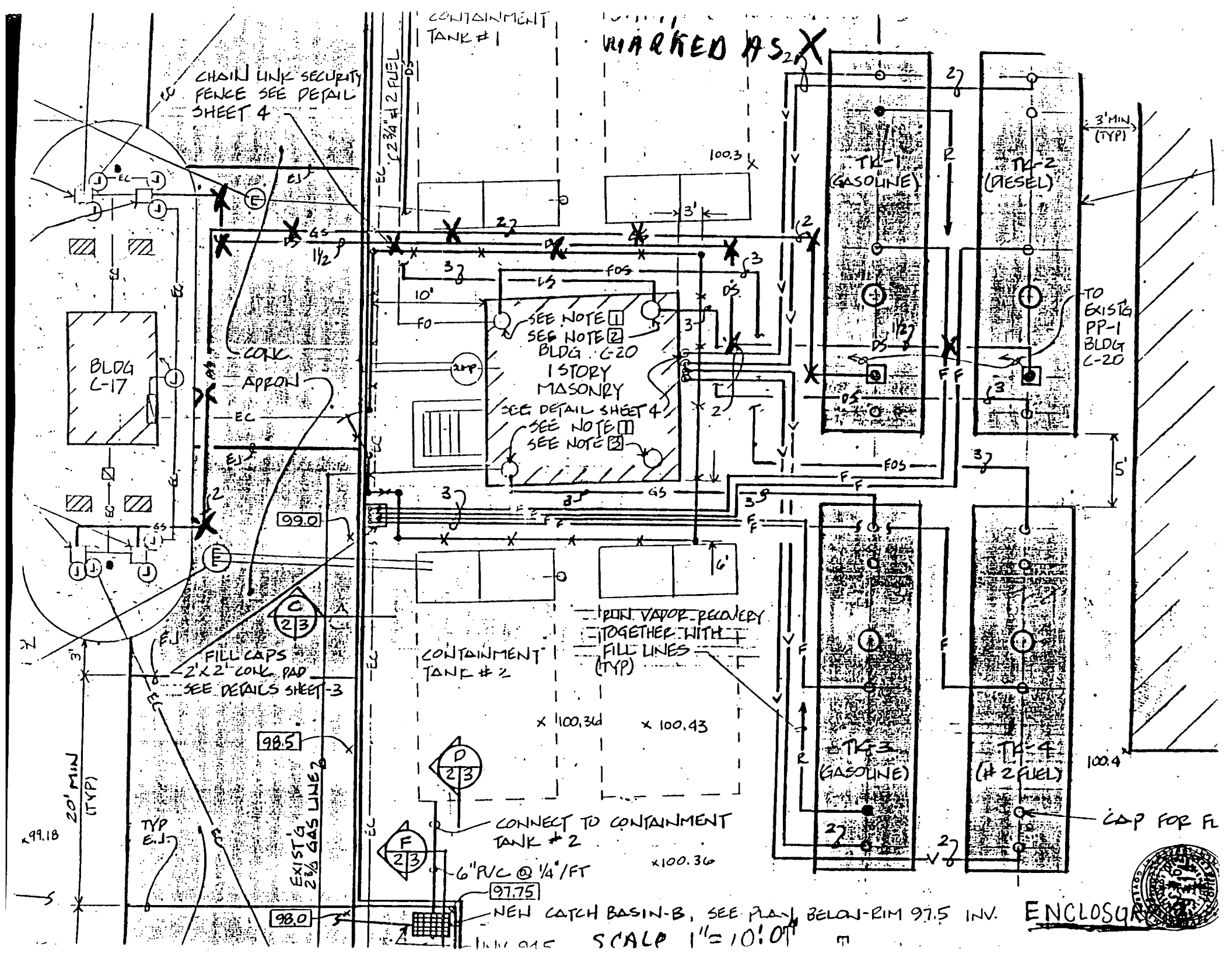
MARKED AS X
CONTAINMENT TANK #1
CHAIN LINK SECURITY FENCE SEE DETAIL SHEET 4
BLDG C-17
CONC. APRON
SEE NOTE 1
SEE NOTE 2
BLDG. C-20
1 STORY
MASONRY
SEE DETAIL SHEET 4
SEE NOTE 1
SEE NOTE 3
TK-1 (GASOLINE)
TK-2 (DIESEL)
TO EXISTG PP-1 BLDG C-20
3' MIN (TYP)
5'
100.3
99.0
98.5
98.0
97.75
99.18
100.4
100.36
100.43
FILL CAPS 2'x2' CONC. PAD SEE DETAILS SHEET-3
CONTAINMENT TANK #2
RUN VAPOR RECOVERY TOGETHER WITH FILL LINES (TYP)
TK-3 (GASOLINE)
TK-4 (#2 FUEL)
CAP FOR FL
20' MIN (TYP)
TYP E.J.
EXISTG 2½ GAS LINE
CONNECT TO CONTAINMENT TANK #2
6" PVC @ 1/4"/FT
NEW CATCH BASIN-B, SEE PLAN BELOW-RIM 97.5 INV.
INV. 94.5
SCALE 1" = 10'-0"
ENCLOSUR

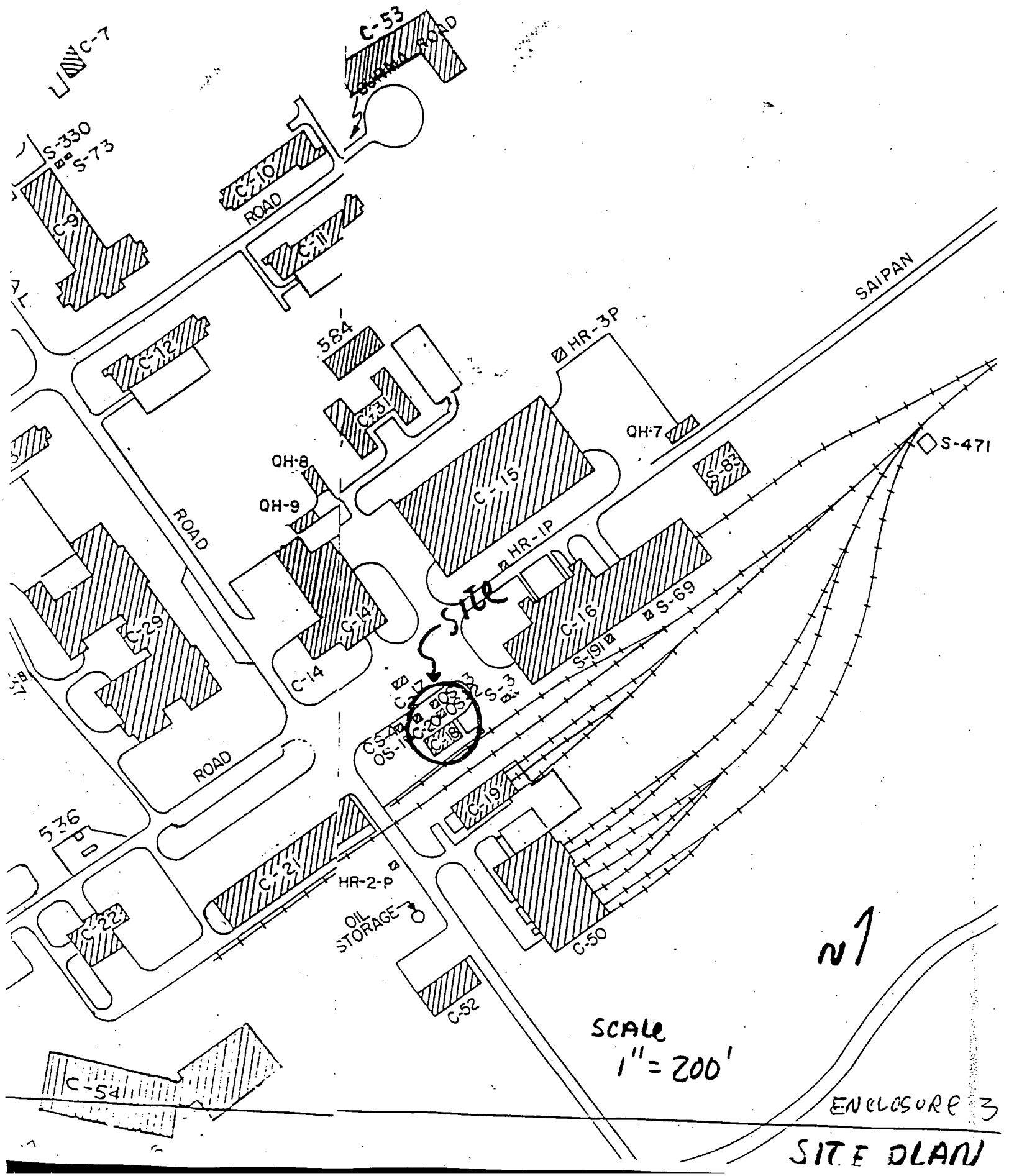

ENCLOSURE 3

SITE PLAN

,13

FOR STATE USE
UST #
Date Rec'd
CA #
Staff

STATE OF NEW JERSEY
DEPARTMENT OF ENVIRONMENTAL PROTECTION

DIVISION OF WATER RESOURCES
BUREAU OF UNDERGROUND STORAGE TANKS
TANK MANAGEMENT SECTION

CN 029, 401 EAST STATE STREET
TRENTON, N.J. 08625-0029

UNDERGROUND STORAGE TANK CLOSURE PLAN APPROVAL APPLICATION

Under the provisions of the Underground Storage of Hazardous Substances Act in accordance with N.J.A.C. 7:14B-9 et seq.

This application form shall be used by all applicants who plan to close Underground Storage Tank Systems pursuant to N.J.A.C. 7:14B-9 et seq.

INSTRUCTIONS:

- *Before completing application form please refer to the attached Application Instruction Sheet.*
- *Please print legibly or type.*
- *Fill in all appropriate blanks. This application form requires that additional sheets be attached for some of the information requested. You may call the Bureau of Underground Storage Tanks/Tank Management Section (609/984-3156) for assistance.*
- *Return one original of this form (including all attachments required) and a copy of the complete Standard Reporting Form (SRF) to the address above. You must sign all forms as required and attach a check for the proper fee (see the fee schedule on Page 3). Make check payable to the Treasurer, State of New Jersey.*
- *If the subject facility is not registered the Closure Plan will not be approved.*
- *Please Note: Make sure that all required informaiton on the Standard Reporting Form (SRF) is submitted. The SRF and this Closure Plan Application must be submitted together.*

Date of Application Sept 3, 1991

FACILITY REGISTRATION #

0151003

I. FACILITY NAME AND ADDRESS

NAVAL WEAPONS STATION EARLE

CODE 096

Route 34 COLTS NECK NJ 07722-5000

Telephone No. 908-577-3515

ENCLOSURE 4

II. THIS CLOSURE PLAN IS FOR:

A. Substance ~~stored~~ in subject PIPES ~~tank(s):~~

1. Petroleum Products

   Indicate Type of Product PIPE SYSTEM #1 - UNLEADED GASOLINE
   (Write out product name;, e.g.) PIPE SYSTEM #2 - DIESEL FUEL

   a. Gasoline, Jet Fuel, or Kerosene
   b. Heating Oil (#2, 4, 6), or Diesel
   c. Waste Oil (Please indicate **total storage capacity** of waste oil at the facility [including the tank(s) being closed]) _____ gals.

2. Hazardous Substances other than Petroleum Products *(Describe)*

   Indicate Type of Product _____
   (Write out product name; add sheet if necessary.)

B. Type of Activity: *(Circle one)*

1. Abandonment of Tank(s)

   Attach the closure plan for abandonment, as required by N.J.A.C. 7:14B-9.2(b) or 9.3(b), which must contain the following items:

   a. Implementation schedule (3 copies per N.J.A.C. 7:14B-9.2(a)3)
   b. Site assessment plan
   c. Tank decommissioning plan
   d. A site map
   e. Attach all justification for abandonment-in-place as required by N.J.A.C. 7:14-9.1(d). Attach the certification statement (on the back page) for abandonment-in-place, if applicable.

2. Removal of PIPES

   Attach the closure plan for removal as required by N.J.A.C. 7:14B-9.2(b) or 9.3(b). The following items must be included:

   a. Implementation schedule (3 copies)
   b. Site assessment plan
   c. PIPE decommissioning plan
   d. A site map

3. Temporary Closure

   Indicate which situation applies and attach appropriate documentation.

   a. ____ Temporary closure for 12 months or less is subject to requirements of N.J.A.C. 7:14B-9.1(a).

   b. ____ Requesting an extension of temporary closure for more than 12 months per N.J.A.C 7:14B-9.1(b) must perform **site assessment** and submit results.

4. Change in Service

   Attach documentation that the tank system being changed from the storage of a **regulated** to a **non-regulated substance** has been emptied and cleaned and that a site assessment has been performed, as required by N.J.A.C. 7:14B-9.1(e).

III. FEE SCHEDULE

Check the activities below that apply, calculate the Total Fee and submit that amount with this application. Make checks payable to **Treasurer, State of New Jersey.** Public schools and religious and charitable institutions are exempt form the fees. The owner or operator shall submit a separate fee for each excavation where an activity occurs.

A. Activities Which Require a Site Assessment 1. Removal or Abandonment without exemption to site assessment requirement	$120.00	$ 120.00
2. Change in service from a regulated substance to a non-regulated substance		
3. Extension of period of Temporary Closure		
B. Activities Not Requiring a Site Assessment 1. Removal or abandonment with valid exemption	N/A	$ 80.00
C. Additional Activities 1. Change in service from one regulated substance to another regulated substance		NO FEE
APPLICATION REVIEW FEE (activities in A, B, C)	+	$ 50.00
TOTAL FEE DUE		$ 170.00

IV. THE BUREAU OF UNDERGROUND STORAGE TANKS WILL REVIEW THE CLOSURE PLAN FOR COMPLETENESS AND APPROPRIATENESS AS SPECIFIED IN SUBCHAPTER 9 OF THE UST REGULATIONS. PLAN APPROVAL WILL INDICATE THAT THE OWNER OR OPERATOR MAY PROCEED WITH THE CLOSURE. **FINAL APPROVAL OF THE CLOSURE IS NOT IMPLIED.** ALL APPROPRIATE AND APPLICABLE PERMITS, LICENSES AND CERTIFICATES REQUIRED FOR ANY OF THE ABOVE ACTIVITIES FROM ANY LOCAL, STATE AND/OR FEDERAL AGENCIES MUST BE OBTAINED SEPARATELY FROM THIS APPLICATION.

THE SITE ASSESSMENT SAMPLING AND ANALYTICAL REQUIREMENTS WILL BE SENT WITH THE APPROVAL TO PROCEED.

NOTE: Notice of Approval to Proceed or Disapproval will be mailed to the facility address unless some other address is specified here.

_____

_____

_____

SIGNATURE OF CONTACT PERSON

This application form must be signed by a contact person of the owner or operator of the subject facility. The contact person should have overall knowledge of tank decommissioning procedures and the site assessment requirements applicable to the tank closure which is the subject of this application.

NAME (Print or Type) JOHN DAWLES *SIGNATURE* John Dawles

TITLE ENVIRONMENTAL ENGINEER *DATE* Sept 3, 1991

UNDERGROUND STORAGE TANK SYSTEM
CLOSURE APPROVAL

9439 COPIER

NEW JERSEY DEPARTMENT OF ENVIRONMENTAL PROTECTION AND ENERGY

DIVISION OF RESPONSIBLE PARTY SITE REMEDIATION
BUREAU OF UNDERGROUND STORAGE TANKS
CN-029, TRENTON, NJ 08625-0029

TMS # C-91-3703 **UST #** 0151003

Naval Weapons Stations Earle
Code 096
Building C-29
Colts Neck

(Monmouth County)

THE ABOVE LISTED FACILITY IS HEREBY GRANTED APPROVAL TO PERFORM THE FOLLOWING ACTIVITY IN ACCORDANCE WITH N.J.A.C. 7:14B-1 et. seq.:

Removal of: 200 linear feet of gasoline piping

Site assessment: Fourteen (14) soil samples will be taken for the piping; one (1) monitoring well will be installed; samples will be collected and analyzed as per the Technical Guidance Document (EPA method 8240 and EPA method 624).

ON-SITE MANAGER: John Pawlus TELEPHONE: 908 577-2515

OWNER: Department of the Navy TELEPHONE:

EFFECTIVE DATE: November 24, 1991

THIS FORM MUST BE DISPLAYED AT THE SITE DURING THE APPROVED ACTIVITY AND MUST BE MADE AVAILABLE FOR INSPECTION AT ALL TIMES.

Kenneth Goldstein

KENNETH GOLDSTEIN, P.E., CHIEF
BUREAU OF UNDERGROUND STORAGE TANKS

UST-011 GREEN- APPLICANT COPY- APPLICANT COPY- LCO COPY- TMS COPY- R&B

3416-04-12

R-51-1-2-10

HEALTH AND SAFETY PLAN

COMPREHENSIVE LONG-TERM ENVIRONMENTAL ACTION NAVY (CLEAN) PROGRAM

NAVAL WEAPONS STATION (NWS) EARLE UNDERGROUND STORAGE TANK INVESTIGATION, BUILDING C-17 COLTS NECK, NEW JERSEY

CONTRACT NUMBER N62472-90-D-1298

CONTRACT TASK ORDER 0031

JANUARY 1992

HALLIBURTON NUS
Environmental Corporation

R-51-1-2-10

HEALTH AND SAFETY PLAN

COMPREHENSIVE LONG-TERM ENVIRONMENTAL ACTION NAVY (CLEAN) PROGRAM

NAVAL WEAPONS STATION (NWS) EARLE UNDERGROUND STORAGE TANK INVESTIGATION, BUILDING C-17 COLTS NECK, NEW JERSEY

SUBMITTED TO:
NORTHERN DIVISION, ENVIRONMENTAL BRANCH, CODE 14
NAVAL FACILITIES ENGINEERING COMMAND
BUILDING 77-L, U.S. NAVAL BASE
PHILADELPHIA, PENNSYLVANIA 19112-5094

SUBMITTED BY:
HALLIBURTON NUS ENVIRONMENTAL CORPORATION
999 WEST VALLEY ROAD
WAYNE, PENNSYLVANIA 19087

CONTRACT NUMBER N62472-90-D-1298

CONTRACT TASK ORDER 0031

JANUARY 1992

PREPARED BY:

Marcia Lynn Case
MARCIA CASE
HEALTH & SAFETY COORDINATOR

APPROVED FOR SUBMISSION BY:

John Trepanowski
JOHN TREPANOWSKI, P.E.
PROGRAM MANAGER

John D. Mihan, CIH for
MATTHEW M. SOLTIS, CSP
HEALTH AND SAFETY MANAGER

Jill Hartnell
JILL HARTNELL
PROJECT MANAGER

TABLE OF CONTENTS

SECTION		PAGE
1.0	INTRODUCTION AND PERSONNEL ASSIGNMENTS	1-1
1.1	INTRODUCTION	1-1
1.2	SITE INFORMATION AND PERSONNEL ASSIGNMENTS	1-2
2.0	DESCRIPTION AND BACKGROUND	2-1
2.1	SITE DESCRIPTION	2-1
2.2	BACKGROUND	2-1
3.0	SCOPE OF WORK	3-1
4.0	RISK ANALYSIS	4-1
4.1	CHEMICAL HAZARD OVERVIEW	4-1
4.2	PHYSICAL HAZARDS	4-3
5.0	STANDARD WORK PRACTICES	5-1
6.0	PERSONAL PROTECTIVE EQUIPMENT	6-1
6.1	PERSONAL PROTECTIVE EQUIPMENT REQUIREMENTS (GENERAL)	6-1
6.2	PERSONAL PROTECTIVE EQUIPMENT FOR DRILLERS AND DRILLERS' HELPERS	6-1
6.3	PERSONAL PROTECTIVE EQUIPMENT REQUIREMENTS FOR SAMPLERS	6-1
6.3.1	Soil Sampling (Excavated Piping Trench)	6-1
6.3.2	Groundwater Sampling (Monitoring Well)	6-1
6.4	RESPIRATORY PROTECTION	6-3
7.0	AIR MONITORING	7-1
7.1	TYPE AND FREQUENCY	7-1
7.2	METHODS OF MAINTENANCE AND CALIBRATION	7-1
7.3	FIELD CALIBRATION	7-2
7.4	DIRECT-READING INSTRUMENT RESPONSE DATA	7-2
8.0	MEDICAL SURVEILLANCE	8-1
8.1	REQUIREMENTS FOR HALLIBURTON NUS PERSONNEL	8-1
8.2	REQUIREMENTS FOR SUBCONTRACTORS	8-1
9.0	DECONTAMINATION PROCEDURES	9-1
10.0	TRAINING REQUIREMENTS	10-1
10.1	INTRODUCTORY AND REFRESHER TRAINING	10-1
10.1.1	Requirements for HALLIBURTON NUS Personnel	10-1
10.1.2	Requirements for Subcontractors	10-1
10.2	SITE-SPECIFIC TRAINING	10-1

TABLE OF CONTENTS

SECTION			PAGE
11.0	**EMERGENCY RESPONSE PLAN (ERP)**		**11-1**
	11.1	EMERGENCY ESCAPE PROCEDURES AND ESCAPE ROUTE ASSIGNMENTS	11-1
	11.2	PROCEDURES TO BE FOLLOWED BY PERSONNEL WHO MUST REMAIN ON SITE TO OPERATE ANY CRITICAL OPERATIONS BEFORE EVACUATING	11-1
	11.3	PROCEDURES TO ACCOUNT FOR ALL PERSONNEL FOLLOWING AN EVACUATION	11-2
	11.4	RESCUE AND MEDICAL DUTIES	11-2
	11.5	EMERGENCY REPORTING PROCEDURES	11-4
	11.6	SITE EMERGENCY ALARM SYSTEM	11-4
	11.7	ERP TRAINING AND REFRESHER	11-5
12.0	**CONFINED-SPACE OPERATIONS**		**12-1**
13.0	**FIELD TEAM REVIEW**		**13-1**
14.0	**SPILL CONTAINMENT PROGRAM**		**14-1**

APPENDICES

A	SITE HEALTH AND SAFETY FOLLOW-UP REPORT	A-1

TABLES

NUMBER		PAGE
4.1	Potential Chemical Hazards	4-2
6.1	Action Levels of Respiratory Upgrades	6-2
7.1	Documentation of Field Calibration	7-3
7.2	Direct-Reading Instrument Response Data	7-4
10.1	Previous Training Record	10-2

FIGURES

NUMBER		PAGE
2.1	Site Location Map	2-2
2.2	Non-Detailed Site Sketch	2-3
8.1	Subcontractor Medical Approval Form	8-3
8.2	Medical Surveillance Letter	8-5
10.1	OSHA Compliance Letter	10-3
10.2	Site-Specific Training Documentation	10-4

EXHIBITS

NUMBER		PAGE
1	Emergency Reference Information	5-5
2	American Red Cross Information Sheet	5-6
3	Medical Data Sheet	8-2

1.0 INTRODUCTION AND PERSONNEL ASSIGNMENTS

1.1 INTRODUCTION

This Health and Safety Plan (HASP) has been developed to provide safety procedures for HALLIBURTON NUS Environmental Corporation employees and HALLIBURTON NUS subcontractor personnel engaged in Underground Storage Tank (UST) Investigation activities at the Naval Weapons Station (NWS) Earle facility. This plan was developed using available information regarding known/suspected chemical contaminants and physical hazards that may be encountered during planned activities. If additional information becomes available prior to or throughout the course of field activities, this document will be modified accordingly. Modifications will be determined by the HALLIBURTON NUS Health and Safety Officer (HSO) and will be immediately communicated to appropriate personnel. The HASP is intended to be in compliance with 29 CFR 1910.120, "Hazardous Waste Operations and Emergency Response; Final Rule."

1.2 SITE INFORMATION AND PERSONNEL ASSIGNMENTS

Site Name: Naval Weapons Station (NWS) Earle

Client Contact: John Pawlus

Address: Colts Neck, New Jersey

Phone Number: (908) 577-2515

Effective Date: January 15, 1992

Purpose of Site Visit: UST Investigation

Proposed Dates of Work: ~~January 20, 1992~~ JH 2/3/92 ~~January 28 - Feb 3, 1992~~ soil sam excavation February 13 + 14, 1992 well installation JH 3/2/92 ~~February~~ March 2, 1992 groundwater sample

Project Team:

HALLIBURTON NUS Personnel:	Discipline/Tasks Assigned:
Jill Hartnell	Project Manager
Jill Hartnell	Field Team Leader (FTL)
Randy Patarcity	Site Safety Officer

Non-HALLIBURTON NUS Personnel/Affiliation:

Plan Preparation:

Prepared by: Marcia Case, HALLIBURTON NUS (1/13/92)

Reviewed and approved by: Matthew M. Soltis, HALLIBURTON NUS (1/16/92)

Reviewed:

HALLIBURTON NUS

Project Manager: Jill Hartnell

Follow-Up Report:

Responsible Person: Randy Patarcity

(Must fill out Follow-Up Report)

2.0 DESCRIPTION AND BACKGROUND

2.1 SITE DESCRIPTION

The NWS Earle facility is located south of Colts Neck, Monmouth County, New Jersey, approximately six miles inland from the Atlantic Ocean. The station is divided into three physically separate areas. The largest of these is the Main Base, which reportedly occupies 10,428 acres. The two smaller areas, the waterfront and Chapel Hill, occupy 706 acres combined.

Further information regarding the exact location of Building C-17 and the surrounding above-ground and underground structures will be made available to HALLIBURTON NUS when work activities begin. The approximate location of the area of concern is identified in figure 2-1 (page 2-2). A non-detailed site sketch is presented in figure 2-2 (page 2-3).

A review of past excavation and drilling work at the NWS Earle facility revealed the presence of septic tanks in the vicinity of underground fuel tanks. Because this information has not yet been made available, for this project, this safety plan will be written assuming that septic tanks may be in the area of work.

2.2 BACKGROUND

NWS Earle operates a filling station at Building C-17 for dispensing gasoline and diesel fuel to Navy vehicles. On May 14, 1991, the fuel lines connecting a 12,000-gallon diesel tank and a 12,000-gallon gasoline tank to the dispensers failed tightness tests. These leaks were reported to the New Jersey Department of Environmental Protection (NJ DEP) and subsequently assigned No. 91-5-15-0941-14. NWS Earle has been instructed to begin clean-up procedures by removing all free-product-contaminated soils.

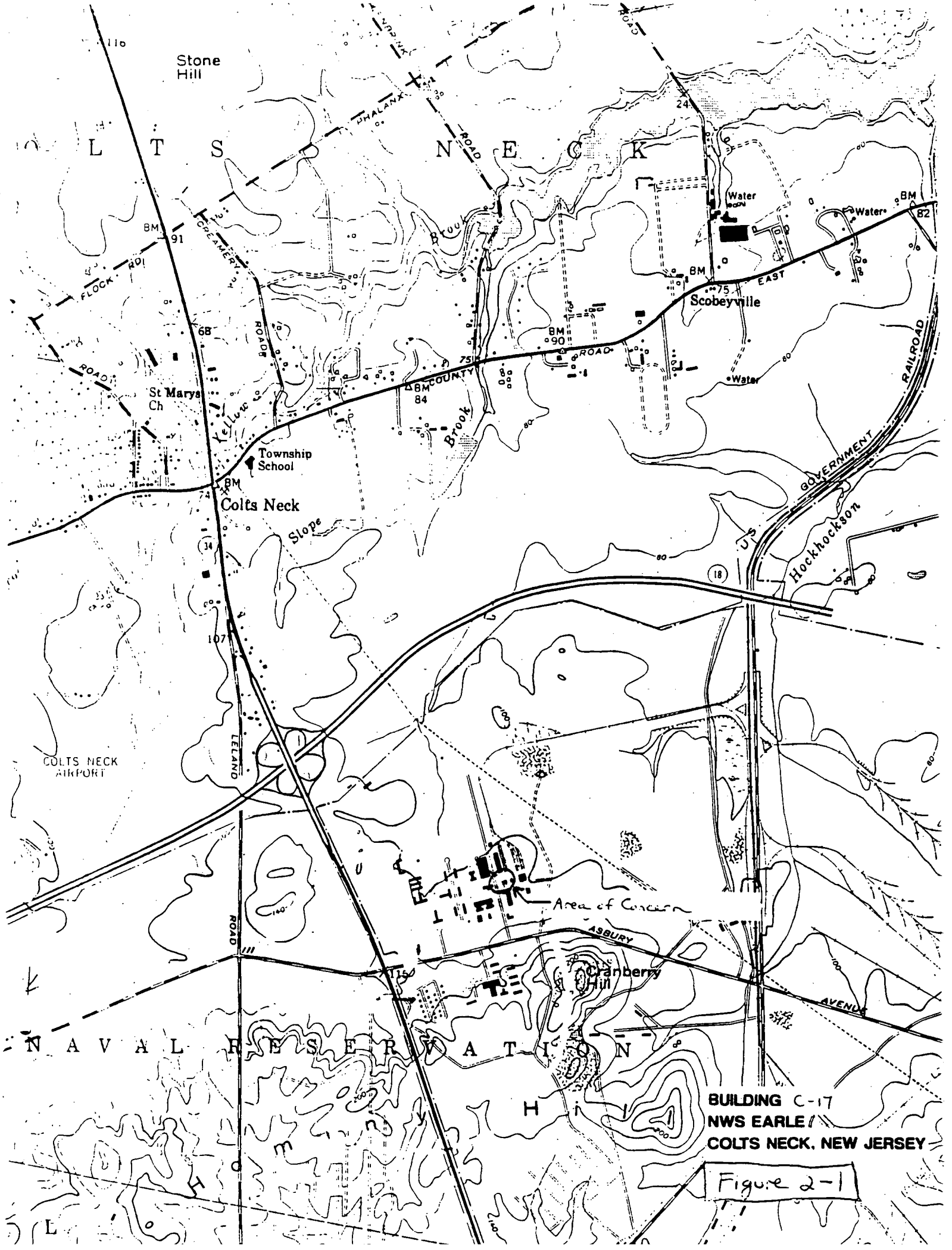
Stone Hill
L T S N E C K
PHALANX ROAD
FLOCK RD
CREAMERY ROAD
Yellow Brook
Slope Brook
COUNTY ROAD
EAST
Scobeyville
Water
St Marys Ch
Township School
Colts Neck
COLTS NECK AIRPORT
LELAND ROAD
GOVERNMENT RAILROAD
Hockhockson
Area of Concern
ASBURY AVENUE
Cranberry Hill
N A V A L R E S E R V A T I O N
BUILDING C-17
NWS EARLE
COLTS NECK, NEW JERSEY

Figure 2-1

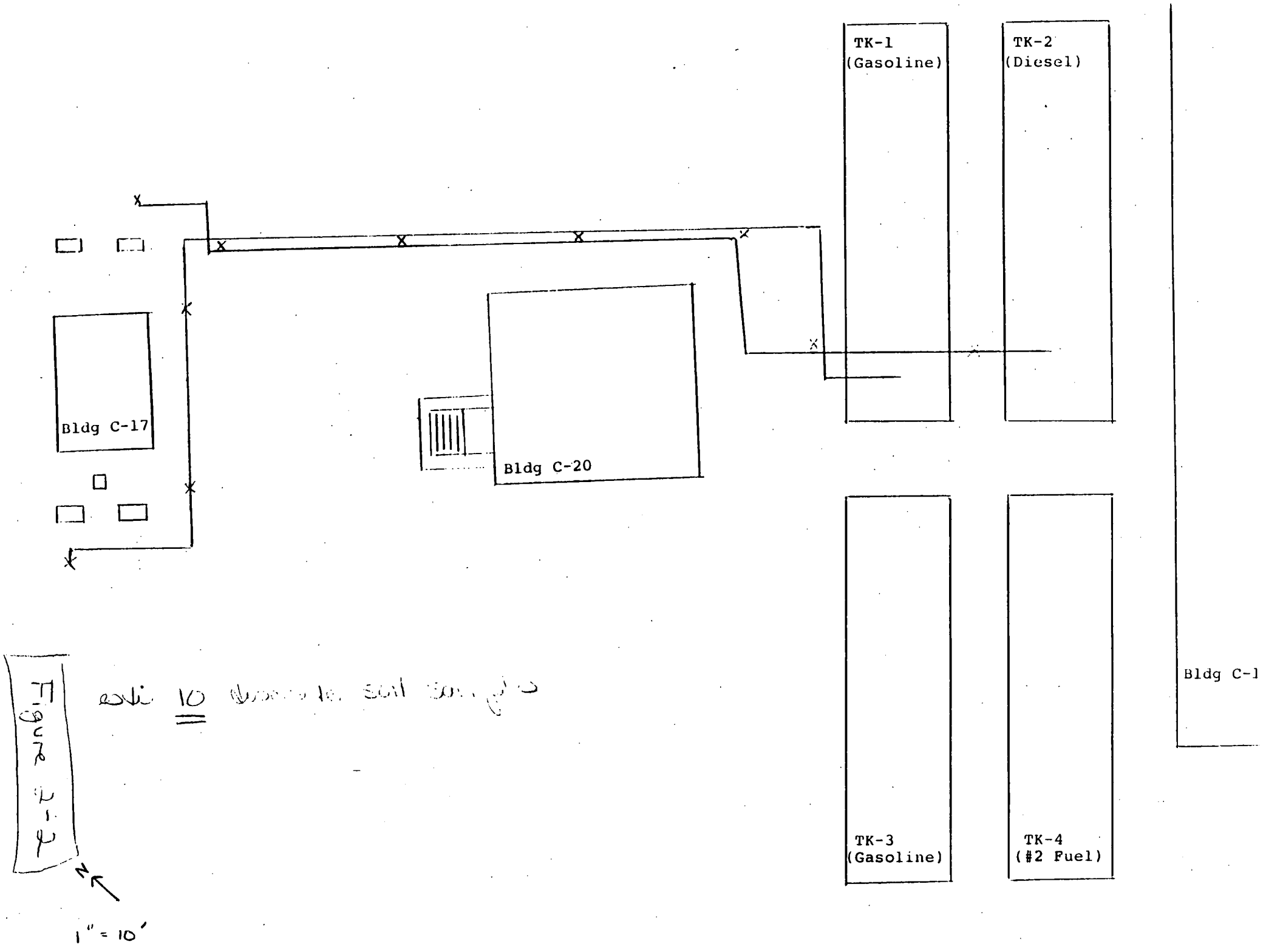
TK-1
(Gasoline)
TK-2
(Diesel)
Bldg C-17
Bldg C-20
TK-3
(Gasoline)
TK-4
(#2 Fuel)
Bldg C-1
1" = 10'

3.0 SCOPE OF WORK

The following tasks will be performed as part of the site assessment portion of this UST investigation:

- Witness the excavation of contaminated soils by the contractor as the existing fuel lines are being removed.
- Determine the need for additional soil excavation by utilizing the Soil/Water Agitation Method and the Field Sorption Method.
- Obtain discrete soil samples at 15-foot intervals along the length of the piping when the excavating has been completed.
- Supervise the installation of one groundwater monitoring well.
- Sample the groundwater from the monitoring well.

4.0 RISK ANALYSIS

4.1 CHEMICAL HAZARD OVERVIEW

Based on available information, it is reasonable to assume that gasoline and diesel fuel are the contaminants of concern.

The primary hazards associated with this investigation include potential exposure via inhalation of vapors and direct skin/eye contact. Due to the lack of both analytical and historical data, it must be assumed that there is a potential for unknown contaminants. These concerns will be given consideration when establishing action levels. Table 4.1 (page 4-2) presents the contaminants known or suspected to be present in the area of concern and outlines toxicity data.

The use of real-time monitoring instruments, visual observation, olfactory observation, and perception of irritation will aid in the identification of exposure to site contaminants. Personal protective equipment (PPE) and standard work practices (sections 6.0 and 5.0 of this plan) will be used when necessary to help reduce or eliminate exposures and, therefore, reduce the potential for adverse health effects.

Another potential hazard is the generation of a flammable or oxygen-deficient atmosphere that could exist as a result of emissions from the excavation area or the well. Because of this potential, it will be necessary to periodically monitor for combustible and/or oxygen-deficient atmospheres. Action levels regarding combustible gas/vapor monitoring are presented in section 6.0.

TABLE 4.1

POTENTIAL CHEMICAL HAZARDS

Substance	CAS No.	Appearance and Odor	Exposure Limits	Ionization Potential	Toxic and Pharmacologic Effects	Flammability, etc.
Gasoline	8006-61-9	Clear, aromatic, volatile liquid	PEL TWA: 300 ppm STEL: 500 ppm TLV TWA: 300 ppm STEL: 500 ppm	Benzene 9.25 Toluene 8.82 Xylene 8.56	Cough, conjunctiva irritation, central nervous system (CNS) depression, pulmonary edema, dermatitis.	Highly flammable liquid. Fire and explosion hazard when exposed to heat or flame
Diesel Fuel (fuel oil)	None listed	Brown, slightly viscose liquid	None listed	None listed	Mildly toxic by ingestion	Flammable when exposed to heat or flame. Reacts with oxidizing materials

If near Septic Tanks:

Methane	74-82-8	Colorless, odorless, gas	None listed	12.98	A simple asphyxiant	Flammable LEL = 5.3% UEL = 15%
Hydrogen Sulfide	7783-06-4	Colorless gas with rotten egg odor	PEL TWA: 10 ppm TLV TWA: 10 ppm IDLH 300 ppm	10.46	Headaches, staggering gait, and nausea. Acute exposure can cause immediate coma leading to death. Contact with eyes can cause severe damage.	Flammable. Incompatible with strong oxidizers UEL - 46% LEL - 4.3%

PEL - Permissible exposure limit
TWA - Time-weighted average
STEL - Short-term exposure limit
TLV - Threshold limit value
UEL - Upper explosive limit
LEL - Lower explosive limit
IDLH - Immediately dangerous to life and health

4.2 PHYSICAL HAZARDS

Aside from the hazards presented by chemical substances, physical hazards must also be addressed. Physical hazards could involve the following:

- Contact with energized sources
- Exposure to moving machinery
- Uneven or unstable terrain (slip, trip hazard)
- Strain or muscle pulls from manual lifting
- Noise in excess of 85 dBA
- Falls from elevated surfaces
- Cold stress

Control efforts for these potential hazards include requirements that machinery on site (i.e., drill rigs and backhoes) be kept properly maintained, positioned, guarded, and operated. No drilling masts or any such projecting items shall be permitted within a 20-foot radius of energized overhead sources. Also, any areas targeted for subsurface investigation shall first be investigated to determine the presence of underground utilities.

Personnel shall be advised of hazards from contact with moving machinery pinch points. Personal protective clothing must fit properly and be taped, not only to minimize chemical exposure but also to minimize potential entanglement with moving machinery. Additionally, equipment will be shut down and locked out before maintenance functions are performed. To protect against overhead hazards, personnel are to wear hard hats when required.

During lifting tasks, personnel are to lift with the force of the load carried by their legs and not by their backs. An appropriate number of personnel must be used when lifting or handling heavy equipment. These procedures are to be employed to minimize the potential for back strain.

Ear protection will be available on site.

Additional control measures for these physical hazards are included in section 5.0, Standard Work Practices.

5.0 SITE STANDARD WORK PRACTICES

All site inspection (SI) activities will follow HALLIBURTON NUS Health and Safety Standard Operating Procedures where appropriate.

The following requirements are HALLIBURTON NUS health and safety standard work procedures:

- Eating, drinking, chewing gum or tobacco, taking medication, and smoking are prohibited in any location where the possibility for the transfer of contamination exists.

- Upon leaving a contaminated area, hands and face must be thoroughly washed. Any protective outer clothing is to be decontaminated, removed, and left at a designated area before personnel enter a clean area.

- Contact with potentially contaminated substances must be avoided. Whenever possible, contact with the ground or with contaminated equipment must also be avoided.

- No facial hair, which interferes with a satisfactory fit of the mask-to-face seal, is allowed on personnel required to wear respiratory protection equipment.

- The use of contact lenses is prohibited for all hazardous waste site operations.

- All personnel must procure a site-specific health and safety plan from the project health and safety officer prior to commencing work on site. Additionally, a Site Safety Follow-Up Report must be filed with each trip report following completion of a task.

- All personnel must satisfy medical monitoring procedures.

- All personnel must follow action levels presented in the Personal Protective Equipment section of this report (section 6.0).

- All electrical tools must be connected to a ground fault interrupter (GFI) and/or must be grounded with a third wire, and the cord must be double insulated and in good working condition.

No flames or open fires will be permitted on site.

- No drilling within 20 feet in any direction of overhead power lines will be permitted. The locations of all underground utilities must be identified and marked prior to initiating any subsurface activities.

- Personnel must develop hand signals with equipment operators.

- All drill rigs and other machinery with exposed moving parts must be equipped with an operational emergency stop device. Drillers and geologists must be aware of the location of this device. This device must be tested prior to job initiation and periodically thereafter. The driller and helper shall not simultaneously handle moving augers unless there is a standby person to activate the emergency stop.

- The driller must never leave the controls while the tools are rotating unless all personnel are kept clear of the rotating equipment.

- A long-handled shovel or equivalent must be used to clear drill cuttings away from the hole and from rotating tools. Hands and/or feet are not to be used for this purpose.

- A remote sampling device must be used to sample drill cutting if the tools are rotating or if the tools are readily capable of rotating. Samplers must not reach into or near the rotating equipment. If personnel must work near any tools that could rotate, the driller must shut down the rig prior to initiating such work.

- Drillers, helpers, and samplers must secure all loose clothing when in the vicinity of drilling operations.

- Only equipment that has been approved by the manufacturer may be used in conjunction with site equipment and specifically to attach sections of drilling tools together. Pins that protrude excessively from augers shall not be allowed.

- No person shall climb the drill mast while tools are rotating.

- No person shall climb the drill mast without the use of ANSI-approved fall protection (i.e., approved belts, lanyards, and a fall protection slide rail) or portable ladder that meets the requirements of Occupational Safety and Health Administration (OSHA) standards.

- All compressed gas cylinders must be stored and used in an upright position, properly secured from damage, and segregated and labeled as empty or full.

- The Site Safety Officer must make an entry into the Health and Safety logbook each day including weather conditions, site personnel, new arrivals, and "clearance for site work" air monitoring data summary, indications or suspicions of inhalation exposure, PPE used per task, deviations from HASP, and general Health and Safety problems and corrective actions.

- Site personnel are not to undertake any activity that would be considered a confined-space entry without first being trained in the proper procedures and obtaining a Confined Space/Limited Egress Permit.

- Site personnel must immediately notify HALLIBURTON NUS Health Sciences of all incidents for OSHA recordkeeping purposes.

- If personnel note any warning properties of chemicals (irritation, odors, symptoms, etc.) or even remotely suspect the occurrence of exposure, they must notify the HSO for further direction.

- Any new analytical data must be promptly conveyed via telephone to the project HSO by the laboratory technician or team leader.

- All site personnel including subcontractors must complete a medical data sheet, to be maintained on site.

- Decontamination solutions and sample preservatives must be handled in well-ventilated areas. Stand upwind when possible.

- The "buddy-system" shall be employed for all activities (and for off-site well location identification activities).

- Work shall be discontinued in the event of severe inclement weather (i.e., electrical storms), at the discretion of the Site Safety Officer and the FTL.

- Post Exhibits 1 and 2 (attached) on site, preferably near the most readily available telephone.

EXHIBIT 1

EMERGENCY REFERENCE INFORMATION

(Post On Site)

Site: NWS Earle Project Number: N62472-90-1298/CTO 0031

Emergency Information:

Ambulance (Name):	NWS Earle	(908) 577-2401
Hospital (Name):	Riverview	(908) 741-2700
Police (Local or State):	Colts Neck	(908) 462-4343
	NWS Earle Security	(908) 577-2457/2443
Fire Department:	NWS Earle Fire	(908) 577-2333
Project Manager:	Jill Hartnell	On site
Site Health and Safety Officer:	Randy Patarcity	On site

Emergency Contacts (Medical and Health):

- HALLIBURTON NUS Consulting Physician Dr. Donald J. McGraw, M.D., M.P.H
  Office: (412) 648-3240
- NAVY CLEAN Health and Safety Manager Matthew M. Soltis, CSP
  Office: (412) 921-8912
- National Response Center (*for environmental emergency only*): 1-800-424-8802

Directions to Hospital:

Take 34 North to 520 East; follow this to Lincroft. After Newman Springs Road, take the first jughandle onto Half Mile Road. Make a right onto Front Street. Go six or seven lights, and make a left on Warf Avenue. Riverview Plaza is on the right.

AMERICAN RED CROSS

First Aid

EMERGENCY TELEPHONE NUMBERS	
Police: Earle	908 - 577 - 2457
Fire Department: Earle	908 - 577 - 2333
Doctor:	
Ambulance: Earle	908 577 - 2401
Hospital: Riverview	908 741 - 2700
Poison Control Center:	

BITES

Animal Bites - Thoroughly wash the wound with soap and water. Flush the area with running water and apply a sterile dressing. Immobilize affected part until the victim has been attended by a physician. See that the animal is kept alive and in quarantine. Obtain name and address of the owner of the animal.

Insect Bites - Remove "stinger" if present. Keep affected part down below the level of the heart. Apply ice bag. For minor bites and stings, apply soothing lotions, such as calamine.

BURNS AND SCALDS

Minor Burns - DO NOT APPLY VASELINE OR GREASE OF ANY KIND. Apply cold water applications until pain subsides. Cover with a dry, sterile gauze dressing. Do not break blisters or remove tissue. Seek medical attention.

Severe Burns - Do not remove adhered particles of clothing. Do not apply ice or immerse in cold water. Do not apply ointment, grease, or vaseline. Cover burns with thick sterile dressings. Keep burned feet or legs elevated. Seek medical attention immediately.

Chemical Burns - Wash away the chemical-soaked clothing with large amounts of water. Remove victim's chemical-soaked clothing. If dry lime, brush away before flushing. Apply sterile dressing and seek medical attention.

CRAMPS

Symptoms - Cramps in muscles of abdomen and extremities. Heat exhaustion may also be present.

Treatment - Same as for heat exhaustion.

CUTS

Apply pressure with sterile gauze dressing and elevate the area until bleeding stops. Apply a bandage and seek medical attention.

EYES

Foreign Objects - Keep the victim from rubbing his eye. Flush the eye with water. If flushing fails to remove the object, apply a dry protective dressing and consult a physician.

Chemicals - Flood the eye thoroughly with water for 15 minutes. Cover the eye with a dry pad and seek medical attention.

FAINTING

Keep the victim lying down. Loosen tight clothing. If victim vomits, roll him onto his side or turn his head to the side. If necessary, wipe out his mouth. Maintain an open airway. Bathe his face gently with cool water. Unless recovery is prompt, seek medical attention.

FRACTURES

Deformity of an injured part usually means a fracture. If fracture is suspected, splint the part. DO NOT ATTEMPT TO MOVE THE INJURED PERSON; seek medical attention immediately.

FROSTBITE

Symptoms - Just before frostbite occurs, the skin may be flushed, then change to white or grayish-yellow. Pain may be felt early and then subside. Blisters may appear; affected part feels very cold and numb.

Treatment - Bring victim indoors and cover the frozen area; provide extra clothing and blankets. Rewarm frozen area quickly by immersion in warm water - - NOT HOT WATER. DO NOT RUB THE PART. Seek medical attention immediately.

HEAT EXHAUSTION

Caused by exposure to heat (either sun or indoors).

Symptoms - Near-normal body temperature. Skin is pale and clammy. Profuse sweating, tiredness, weakness, headache, perhaps crams, nausea, dizziness, and possible fainting.

Treatment - Keep in lying position and raise victim's feet. Loosen clothing, and apply cool wet cloths. If conscious, give sips of salt water (1 teaspoon of salt per glass) over a period of one hour. If vomiting occurs, discontinue the salt water. Seek medical attention immediately.

SUNSTROKE

Symptoms - Body temperature is high (106°F or higher). Skin is hot, red, and dry. Pulse is rapid and strong. Victim may be unconscious.

Treatment - Keep victim in lying position with head elevated. Remove clothing and repeatedly sponge the bare skin with cool water or rubbing alcohol. Seek medical attention immediately.

POISONING

Call the Poison Control Center for instruction on immediate care. If victim becomes unconscious, keep the airway open. If breathing stops, give artificial respiration by mouth-to-mouth breathing. Call an emergency squad as soon as possible.

POISON IVY

Remove contaminated clothing; wash all exposed areas thoroughly with soap and water followed by rubbing alcohol. If rash is mild, apply calamine or other soothing skin lotion. If a severe reaction occurs, seek medical attention.

PUNCTURE WOUNDS

If puncture would is deeper than skin surface, seek medical attention. Serious infection can arise unless proper treatment is received.

SPRAINS

Elevate injured part and apply ice bag or cold packs. DO NOT SOAK IN HOT WATER. If pain and swelling persist, seek medical attention.

UNCONSCIOUSNESS

Never attempt to give anything by mouth. Keep victim lying flat; maintain open airway. If victim is not breathing, provide artificial respiration by mouth-to-mouth breathing and call an emergency squad as soon as possible.

EXHIBIT 2

AMERICAN RED CROSS INFORMATION SHEET

HALLIBURTON NUS
Environmental Corporation

6.0 PERSONAL PROTECTIVE EQUIPMENT

6.1 PPE REQUIREMENTS (GENERAL)

All personnel must wear, as a minimum, steel-toed/hard-soled work boots while on site. Hard hats and side-shielded safety glasses must be worn if personnel are within 20 feet of the drilling operations and/or if other conditions exist where head protection or eye protection may be necessary. Ear plugs will be available should conditions dictate their use. Respiratory protection will be in accordance with Table 6.1 Action Levels (page 6-2).

6.2 PPE REQUIREMENTS FOR DRILLERS AND DRILLERS' HELPERS

All drilling personnel and all other personnel who could come in contact with waste material are required to wear, in addition to the PPE listed above, standard Tyvek coveralls, Nitrile outer gloves, latex inner gloves, boot covers, and taped ankle and wrist seams. Polyethylene (PE)-coated Tyvek or polyvinyl chloride (PVC) coveralls will be required if free-phase product and/or heavily contaminated soil is encountered. Modification of PPE is at the discretion of the site safety officer (SSO).

6.3 PPE REQUIREMENTS FOR SAMPLERS

6.3.1 Soil Sampling (Excavated Piping Trench)

In addition to the general requirements above, soil sampling personnel will wear PE-coated Tyvek (or PVC) coveralls, Nitrile outer gloves, latex inner gloves, boot covers, and taped ankle and wrist seams. Respiratory protection will be in accordance with Table 6.1 Action Levels (page 6-2).

6.3.2 Groundwater Sampling (Monitoring Well)

In addition to the general requirements above, groundwater sampling personnel will wear standard Tyvek coveralls, Nitrile outer gloves, latex inner gloves, boot covers, and taped wrist seams. PE-coated Tyvek (or PVC) coveralls will be used if free product is observed. Respiratory protection will be in accordance with Table 6.1 Action Levels.

Table 6.1

Action Levels of Respirat ry Upgrades

Monitoring Device	Action Level	Action
Radiation Monitor - 4	Background to < 1 mR/h	• Continue investigation
	1 - 2 mR/h	• Proceed with caution; avoid contact with these areas
	> 2 mR/h	• Evacuate the site
Photoionization Detector (PID)	≤ Background	• Continue work
	> Background	• Monitor breathing zone
	> Background in breathing zone	• APR with organic vapor/HEPA cartridges • Monitor oxygen levels
	> 10 ppm in breathing zone	• Pressure-demand supplied-air respirator • Monitor hydrogen sulfide levels • Monitor percent LEL
Flame Ionization Detector	≤ Background	• Continue work
	> Background	• Monitor breathing zone
	> Background in breathing zone	• APR with organic vapor/HEPA cartridges • Monitor oxygen levels • Perform methane test or compare with PID results
	> 10 ppm in breathing zone	• Pressure-demand supplied-air respirator • Monitor hydrogen sulfide levels • Monitor percent LEL
Oxygen Meter	< 19.5 percent	• Pressure-demand supplied-air respirator
LEL Meter	> 10 percent LEL	• Proceed with caution. Use nonsparking equipment
	> 25 percent LEL	• Cease work activities
Hydrogen Sulfide Meter	> 10 ppm	• Pressure-demand supplied-air respirator

6.4 RESPIRATORY PROTECTION

Full-face air-purifying respirators (APRs) equipped with organic vapor cartridges and HEPA filter are to be worn any time monitoring instrument readings in the breathing zone are above background and any time odors (other than rotten eggs), irritation, or dusty conditions are evident. Pressure-demand supplied-air respirators are required any time monitoring instrument readings in the breathing zone exceed 10 ppm, anytime H_2S is detected, and/or any time it is believed that APRs are ineffective.

7.0 AIR MONITORING

7.1 TYPE AND FREQUENCY

The following instruments will be used to monitor air quality at both the potential source and in the workers' breathing zone:

- HNU P101, 11.7 eV probe
- OVA
- Radiation Monitor 4

At a minimum, monitoring will be conducted at the beginning of each task and frequently during all site activities.

The following instruments will be used periodically to determine potential explosive and/or oxygen-deficient atmospheres, as well as specific contaminants:

- LEL/Oxygen meter
- H_2S Meter

If at any time these instruments indicate a potential hazard, monitoring will be performed more frequently.

See section 6.0 (table 6.1) for Action Levels and Respiratory Upgrades.

7.2 METHODS OF MAINTENANCE AND CALIBRATION

All equipment maintenance and calibration efforts shall be conducted by Thomas Patton at the HALLIBURTON NUS Pittsburgh warehouse facility. Additionally, daily field calibrations and operational checks will be conducted and documented by the Site Safety Officer. These efforts shall be performed in accordance with the following HALLIBURTON NUS Health and Safety Standard Operating Procedures (SOPs):

- No. ME01: Use, Calibration, and Maintenance of the HNU PI-101

- No. ME02: Use, Calibration, and Maintenance of the OVA 128 Organic Vapor Analyzer
- No. ME04: Use, Calibration, and Maintenance of the Oxygen Meter
- No. ME05: Use, Calibration, and Maintenance of the Combustible Gas Indicator
- No. ME09: Use, Calibration, and Maintenance of Radiation Monitoring Equipment

7.3 FIELD CALIBRATION

The results of instrument calibration performed in the field must be recorded on table 7.1 (page 7-3) and returned to the Health Sciences Department with the Site Health and Safety Follow-Up R port.

7.4 DIRECT-READING INSTRUMENT RESPONSE DATA

Any readings obtained through the use of direct-reading instruments must be recorded throughout the duration of project activities. This information is to be recorded on table 7.2 (page 7-4) and returned to the HALLIBURTON NUS Health and Safety Manager (HSM) with the Site Health and Safety Follow-Up Report at the conclusion of the project site activities.

TABLE 7.1

DOCUMENTATION OF FIELD CALIBRATION

SITE NAME: NAVAL WEAPONS STATION EARLE

PROJECT NO.: 0031

Date of Calibration	Instrument Name and Model	HALLIBURTON NUS Instrument I.D. Number	Person Performing Calibration	Instrument Settings		Instrument Readings		Calibration Standard (Lot Number)	Remarks/ Comments
				Pre-Calibration	Post-Calibration	Pre-Calibration	Post-Calibration		
1-29-92	HNU P101 11.7 ev	N-6604	JA Hartnell	9.8	9.8	66	66	04/191-3	
1-31-92	HNU P101 11.7	N-6604	R. Patarcity	↓	↓	↓	↓	↓	
2-3-92	HNU P101 11.7	N-6604	JA Hartnell	↓	↓	↓	↓	↓	
2-13-92	HNU P101 11.7	N-6604	JA Hartnell	↓	↓	↓	↓	↓	
2-14-92	HNU P101 11.7	N-6604	JA Hartnell	↓	↓	↓	↓	↓	
3-2-92	HNU P101 11.7	N-6604	JA Hartnell	↓	↓	↓	↓	↓	
3-2-92	pH meter	N-2027	R. Patarcity						
3-2-92	conductivity meter	N-1652	J. Hartnell						
3-2-92	turbidity meter		R. Patarcity						
2-13-92	LEL	N-4306	J. Hartnell						

TABLE 7.2

DIRECT-READING INSTRUMENT RESPONSE DATA

SITE NAME: NAVAL WEAPONS STATION EARLE

PROJECT NO.: 0031

PAGE 1 OF 1

Date and Time(s)	Instrument Operator Name	Instrument Used	Instrument Reading and Duration	Location (e.g., borehole vs breathing zone)	Operation(s) Being Performed	Personnel in Vicinity at Time of Readings and Level of PPE Worn
Example 12-12-91/14:30	Joe Field	HNU 101	15 ppm/15 min.	breathing zone	sample location no. 12	Jim Technician/Level B George Grunt/Level B
1-30-92/ 850 to 1300	R. Patarcity/ J. Hartnell	HNU PI01	range 0 to 90; 30 seconds each	soil ~~samples~~	samples from trench locations 1 through 10	R. Patarcity J. Hartnell / Level D
1-31-92/ 0900 to 1125	R. Patarcity/ J. Hartnell	HNU PI01	range 0 to 200; 30 seconds each	soil ~~samples~~	samples from trench; locations 11 through 19	R. Patarcity J. Hartnell / Level D
1-31-92/ 1220 to 1410	R. Patarcity/ J. Hartnell	HNU PI01	range 0 to 250; 30 seconds each	headspace for soil sample	E-S-01 through E-S-09 & E-S-12	"
2-3-92/ 0815 to 1335	"	"	range 3 to 250; 30 seconds each	soil	samples from trench locations 22-31	"
2-3-92/ 1040 to 1335	"	"	range 0 to 150; 30 seconds each	headspace for soil sample	E-S-10 through E-S-18 except E-S-12	"
2-13-92/ 0843 to 1120	J. Hartnell	"	0	borehole	borehole installation	J. Hartnell / Level D
2-14-92/ 0820	J. Hartnell	"	0	borehole	borehole development	J. Hartnell / Level D
2-14-92/ 0900 to 1000	"	"	0	drum with purge water	"	"
3-2-92/ 1115	~~R. Pata~~ J. Hartnell	"	0	borehole	well sampling	"

note: no readings above background were detected in the breathing zone onsite.

TABLE 7.2
DIRECT-READING INSTRUMENT RESPONSE DATA
PAGE TWO

SITE NAME: NAVAL WEAPONS STATION EARLE

PROJECT NO.: 0031

PAGE _____ OF _____

Date and Time(s)	Instrument Operator Name	Instrument Used	Instrument Reading and Duration	Location (e.g., borehole vs breathing zone)	Operation(s) Being Performed	Personnel in Vicinity at Time of Readings and Level of PPE Worn

8.0 MEDICAL SURVEILLANCE

8.1 REQUIREMENTS FOR HALLIBURTON NUS PERSONNEL

HALLIBURTON NUS personnel whose work may require their presence in areas where potential exposures to hazardous materials exist shall participate in the HALLIBURTON NUS medical monitoring program and must have a completed Medical Data Sheet (Exhibit 3). All medical examinations performed for HALLIBURTON NUS personnel shall be conducted in accordance with OSHA General Industry Standards 29 CFR 1910.120 and 1910.134.

All subcontractor personnel whose presence is required on site must first be examined by a licensed physician (or under the supervision of a licensed physician) in accordance with OSHA standards 29 CFR 1910.120 and 1910.134.

8.2 REQUIREMENTS FOR SUBCONTRACTORS

Subcontractors are required to obtain a certificate of their ability to perform hazardous waste site work and to wear respiratory protection. The Subcontractor Medical Approval Form (figure 8.1, page 8-3) can be used to satisfy this requirement, providing it is properly completed and signed by a licensed physician. Subcontractors who have a company medical surveillance program meeting the requirements of paragraph (f) of 29 CFR 1910.120 can substitute figure 8.1 with a letter, on company letterhead, containing all of the information in the example letter presented as figure 8.2. Figure 8.2 and figure 10.1 can be combined into one letter.

note: Driller's declined to complete Exhibit 3 as they had previously provided all the requested information to HALLIBURTON NUS - Gaithersburg.

J Harrell 3/3/92

EXHIBIT 3

MEDICAL DATA SHEET

This form must be completed by all on-site HALLIBURTON NUS personnel and subcontractors, prior to the commencement of activities, and shall be kept in the site command post during site activities. This form must be delivered to any attending physician when medical assistance is needed.

Site NWS Earle

Name Jill Hartnell Home Telephone (215) 793-2595

Address 1252 Forrest Rd West Chester PA 19382

Date of most recent physical examination* 2 / 12 / 92

Age 35 Height 5'7" Weight 131

Name of next of kin Kevin C. Kilmartin Telephone ( ) same

Drug allergies or other allergies Septra DS, dust

Previous Illnesses or Exposures to Hazardous Substances: —

Current Medication (prescription and non-prescription):

Humibid LA, Tedralist Guyacags

Medical Restrictions none

Name, address, and phone number of personal physician Dr. Robt Schuster, Paoli Hospital Medical Building

*Confirmed by Site HSO _____ Signature of HSO ___/___/___ Date

EXHIBIT 3

MEDICAL DATA SHEET

This form must be completed by all on-site HALLIBURTON NUS personnel and subcontractors, prior to the commencement of activities, and shall be kept in the site command post during site activities. This form must be delivered to any attending physician when medical assistance is needed.

Site NWS Earle

Name Randy Patarcity Home Telephone (215) 692-2176

Address 116 S. Darlington St. W. Chester PA 19382

Date of most recent physical examination* 11 / 14 / 91

Age 29 Height 5'9" Weight 175

Name of next of kin Robert Patarcity Telephone (215) 296-3058

Drug allergies or other allergies none

Previous Illnesses or Exposures to Hazardous Substances:
none

Current Medication (prescription and non-prescription):
none

Medical Restrictions none

Name, address, and phone number of personal physician
Dr Lawlor - Paoli, PA. (215) 687-0715

*Confirmed by Site HSO _____ ___/___/___
Signature of HSO Date

For employees of _____
Company Name

Participant Name: _____ Date of Exam: _____

Part A

The above-named individual has:

1. Undergone a physical examination in accordance with OSHA Standard 29 CFR 1910.120, paragraph (f) and found to be medically -

   ( ) qualified to perform work at the _____ work site
   ( ) not qualified to perform work at the _____ work site

   and,

2. Undergone a physical examination as per OSHA 29 CFR 1910.134 (b)(10) and found to be medically -

   ( ) qualified to work in respiratory protection
   ( ) not qualified to work in respiratory protection

My evaluation has been based on the following information, as provided to me by the employer.

( ) A copy of OSHA Standard 29 CFR 1910.120 and appendices.
( ) A description of the employee's duties as they relate to the employee's exposures.
( ) A list of known/suspected contaminants and their concentrations (if known).
( ) A description of any personal protective equipment used or to be used.
( ) Information from previous medical examinations of the employee which is not readily available to the examining physician.

Part B

I, _____, have examined _____
Physician's Name (print) Participant's Name (print)
and have determined the following information:

1. Results of the medical examination and tests (excluding findings or diagnoses unrelated to occupational exposure):

   _____
   _____
   _____

FIGURE 8.1

SUBCONTRACTOR MEDICAL APPROVAL FORM

HALLIBURTON NUS
Environmental Corporation

2. Any detected medical conditions which would place the employee at increased risk of material impairment of the employee's health:

_____

_____

_____

3. Recommended limitations upon the employee's assigned work:

_____

_____

_____

_____

I have informed this participant of the results of this medical examination and any medical conditions which require further examination or treatment.

Based on the information provided to me, and in view of the activities and hazard potentials involved at the _____work site, this participant

( ) may
( ) may not

perform his/her assignment task.

Physician's Signature _____

Address _____

Phone Number _____

NOTE: Copies of test results are maintained and available at:

_____

Address

FIGURE 8.1 (CONTINUED)

SUBCONTRACTOR MEDICAL APPROVAL FORM

HALLIBURTON NUS
Environmental Corporation

The following statements must be typed on company letterhead and signed by an officer of the company.

LOGO
XYZ CORPORATION
555 E. 5th Street
Nowheresville, Kansas 55555

Month, day, year

Ms. Jill Hartnell, Project Manager
HALLIBURTON NUS Environmental Corporation
999 West Valley Road
Wayne, Pennsylvania 19087

Subject: Medical Surveillance
Naval Weapons Station Earle

Dear Ms. Hartnell:

As an officer of XYZ Corporation, I hereby state that the persons listed below participate in a medical surveillance program meeting the requirements contained in paragraph (f) of Title 29 of the Code of Federal Regulations, Part 1910.120 entitled "Hazardous Waste Operations and Emergency Response: Final Rule." I further state that the persons listed below have had physical examinations under this program within the last 12 months and that they have been cleared, by a licensed physician, to perform hazardous waste site work and to wear respiratory protection. I also state that, to my knowledge, no person listed below has any medical restrictions that would preclude him/her from performing their assigned activities at the NWS Earle Site.

LIST EMPLOYEE NAMES AND DATES OF MOST RECENT PHYSICAL EXAMS HERE

Should you have any questions, please contact me at 555/555-5555.

Sincerely,

(Name of Company Officer)
Title

FIGURE 8.2

MEDICAL SURVEILLANCE LETTER

HALLIBURTON NUS
Environmental Corporation

FORM 3

SUBCONTRACTOR DOCUMENTATION OF OSHA TRAINING AND MEDICAL MONITORING REQUIREMENTS

Name of Subcontractor: Diamond Drilling Co., Inc.

Name of Employee: M. H. Brinkerhoff, III

Company Representative Signature: _____

I verify that all of the information on this form is accurate.

Medical Monitoring (please check one):

X Is currently participating in a medical monitoring program

The date of this employee's last physical exam _____

_____ Will be placed in a medical monitoring program prior to start of job

Training (provide certificates)

The date that this employee received 40 hours of hazardous material operations training was 9-29-89. If employee has not received this training, complete all items below.

The most recent date that this employee received the annual eight-hour refresher hazardous material operations training was* 11-9-90.

* Next eight hour refresher scheduled for 1-20-92

The individual named above has:

1. Hours worked at hazardous waste site at:

   Level B _____ hours

   Level C _____ hours

   Level D _____ hours

2. Work experience at (example sites):

   _____

   _____

3. Training:

   _____ hours of site-specific training. Site names: _____

   _____

   _____ hours of in-house training. Topics: _____

   _____

SUBCONTRACTOR MEDICAL APPROVAL FORM

For employees of Diamond Drilling Co., Inc.
Company Name

Participant Name: M. H. Brinkerhoff, III Date of Exam: 1-9-92

Part A

The above-named individual has:

1. Undergone a physical examination in accordance with OSHA Standard 29 CFR 1910.120, paragraph (f) and found to be medically

   (✓) qualified to perform work at the NWS Charlo work site.
   ( ) not qualified to perform work at the _____ work site.

   and,

2. Undergone a physical examination as per OSHA 29 CFR 1910.134 (b)(10) and found to be medically

   (✓) qualified to work in respiratory protection.
   ( ) not qualified to work in respiratory protection.

My evaluation has been based on the following information, as provided to me by the employer.

( ) A copy of OSHA Standard 29 CFR 1910.120 and appendices.
(✓) A description of the employee's duties as they relate to the employee's exposures.
(✓) A list of known/suspected contaminants and their concentrations (if known).
(✓) A description of any personal protective equipment used or to be used.
(✓) Information from previous medical examinations of the employee which is not readily available to the examining physician.

Part B

I, McRonald Ross, MD, have examined M. H. Brinkerhoff, III
Physician's Name (print) *Participant's Name (print)*
and have determined the following information:

1. Results of the medical examination and tests (excluding finding or diagnoses unrelated to occupational exposure):

_____
_____
_____

SUBCONTRACTOR MEDICAL APPROVAL FORM
PAGE TWO

2. Any detected medical conditions which would place the employee at increased risk of material impairment of the employee's health:

   None

3. Recommended limitations upon the employee's assigned work:

   None

I have informed this participant of the results of this medical examination and any medical conditi ns which require further examination or treatment.

Based on the information provided to me, and in view of the activities and hazard potentials inv lved at the NWS Earle work site, this participant

(✓) may
( ) may not

perform his/her assigned task.

Physician's Signature [signature]
Address 120 Drum Pt. Rd Brick
Phone Number 908 477 3737

NOTE: Copies of test results are maintained and available at:

120 DRUM PT. RD BRICK NJ 08723
Address

FORM 3

SUBCONTRACTOR DOCUMENTATION OF OSHA TRAINING AND MEDICAL MONITORING REQUIREMENTS

Name of Subcontractor: Diamond Drilling Co., Inc.

Name of Employee: James J. Hillmann

Company Representative Signature: _____

I verify that all of the information on this form is accurate.

Medical Monitoring (please check one):

X Is currently participating in a medical monitoring program

The date of this employee's last physical exam _____

_____ Will be placed in a medical monitoring program prior to start of job

Training (provide certificates)

The date that this employee received 40 hours of hazardous material operati ns training was 2-8-91. If employee has not received this training, complete all items below. The most recent date that this employee received the annual eight-hour refresher hazardous material operations training was _____.

The individual named above has:

1. Hours worked at hazardous waste site at:

   Level B _____ hours

   Level C _____ hours

   Level D _____ hours

2. Work experience at (example sites):

   _____

   _____

3. Training:

   _____ hours of site-specific training. Site names: _____

   _____

   _____ hours of in-house training. Topics: _____

   _____

SUBCONTRACTOR MEDICAL APPROVAL FORM

For employees of Diamond Drilling Co., Inc.
Company Name

Participant Name: James J. Hillmann Date of Exam: 1-9-92

Part A

The above-named individual has:

1. Undergone a physical examination in accordance with OSHA Standard 29 CFR 1910.120, paragraph (f) and found to be medically

   (✓) qualified to perform work at the NW's Bank work site.
   ( ) not qualified to perform work at the _____ work site.

   and,

2. Undergone a physical examination as per OSHA 29 CFR 1910.134 (b)(10) and found to be medically

   (✓) qualified to work in respiratory protection.
   ( ) not qualified to work in respiratory protection.

My evaluation has been based on the following information, as provided to me by the employer.

( ) A copy of OSHA Standard 29 CFR 1910.120 and appendices.
(✓) A description of the employee's duties as they relate to the employee's exposures.
(✓) A list of known/suspected contaminants and their concentrations (if known).
(✓) A description of any personal protective equipment used or to be used.
(✓) Information from previous medical examinations of the employee which is not readily available to the examining physician.

Part B

I, R. McRonald, MD, have examined James J. Hillmann
Physician's Name (print) *Participant's Name (print)*
and have determined the following information:

1. Results of the medical examination and tests (excluding finding or diagnoses unrelated to occupational exposure):

   Lumbar disc disease

SUBCONTRACTOR MEDICAL APPROVAL FORM
PAGE TWO

2. Any detected medical conditions which would place the employee at increased risk of material impairment of the employee's health:

   Lumbar disc disease

3. Recommended limitations upon the employee's assigned work:

   No heavy lifting

I have informed this participant of the results of this medical examination and any medical conditi ns which require further examination or treatment.

Based on the information provided to me, and in view of the activities and hazard potentials involved at the NWS Earle work site, this participant

(✓) may
( ) may not

perform his/her assigned task.

Physician's Signature [signature] MD

Address 120 Drum Pt. Rd Brick NJ

Phone Number 908 477 . 3237

NOTE: Copies of test results are maintained and available at:

120 Drum Pt. Rd. Brick NJ. 08723

Address

FORM 3

SUBCONTRACTOR DOCUMENTATION OF OSHA TRAINING AND MEDICAL MONITORING REQUIREMENTS

Name of Subcontractor: Diamond Drilling Co., Inc.

Name of Employee: Christopher S. Musto

Company Representative Signature: _____

I verify that all of the information on this form is accurate.

Medical Monitoring (please check one):

__X__ Is currently participating in a medical monitoring program

The date of this employee's last physical exam _____

_____ Will be placed in a medical monitoring program prior to start of job

Training (provide certificates)

The date that this employee received 40 hours of hazardous material operations training was 9-9-91. If employee has not received this training, complete all items below.

The most recent date that this employee received the annual eight-hour refresher hazardous material operations training was _____.

The individual named above has:

1. Hours worked at hazardous waste site at:

   Level B _____ hours

   Level C _____ hours

   Level D _____ hours

2. Work experience at (example sites):

   _____

   _____

3. Training:

   _____ hours of site-specific training. Site names: _____

   _____

   _____ hours of in-house training. Topics: _____

   _____

SUBCONTRACTOR MEDICAL APPROVAL FORM

For employees of Diamond Drilling Co., Inc.
Company Name

Participant Name: Christopher S. Musto Date of Exam: 1-9-92

Part A

The above-named individual has:

1. Undergone a physical examination in accordance with OSHA Standard 29 CFR 1910.120, paragraph (f) and found to be medically

   (✓) qualified to perform work at the NWS Site work site.
   ( ) not qualified to perform work at the _____ work site.

   and,

2. Undergone a physical examination as per OSHA 29 CFR 1910.134 (b)(10) and found t be medically

   (✓) qualified to work in respiratory protection.
   ( ) not qualified to work in respiratory protection.

My evaluation has been based on the following information, as provided to me by the employer.

( ) A copy of OSHA Standard 29 CFR 1910.120 and appendices.
(✓) A description of the employee's duties as they relate to the employee's exposures.
(✓) A list of known/suspected contaminants and their concentrations (if known).
(✓) A description of any personal protective equipment used or to be used.
( ) Information from previous medical examinations of the employee which is n t readily available to the examining physician.

Part B

I, R. McRonald MD, have examined Christopher S. Musto
Physician's Name (print) *Participant's Name (print)*
and have determined the following information:

1. Results of the medical examination and tests (excluding finding or diagnoses unrelated to occupational exposure):

   Normal

SUBCONTRACTOR MEDICAL APPROVAL FORM
PAGE TWO

2. Any detected medical conditions which would place the employee at increased risk of material impairment of the employee's health:

   None

3. Recommended limitations upon the employee's assigned work:

   None

I have informed this participant of the results of this medical examination and any medical conditions which require further examination or treatment.

Based on the information provided to me, and in view of the activities and hazard potentials inv lved at the News Corp Co work site, this participant

(✓) may
( ) may not

perform his/her assigned task.

Physician's Signature [signature] MD
Address 120 Drum Pt. Road Brick NJ
Phone Number

NOTE: Copies of test results are maintained and available at:

120 Drum Pt Rd Brick NJ 08723
Address

Subpart	SUBCONTRACTOR HEALTH AND SAFETY	Form 2	Page 1 of 2

SUBCONTRACTOR MEDICAL APPROVAL FORM

For employees of Diamond Drilling Co.
Company Name

Participant Name: Norman Crowe Date of Exam: 2/10/92

Part A

The above-named individual has:

1. Undergone a physical examination in accordance with OSHA Standard 29 CFR 1910.120, paragraph (f) and found to be medically

   (✓) qualified to perform work at the _____ work site.
   ( ) not qualified to perform work at the _____ work site.

   and,

2. Undergone a physical examination as per OSHA 29 CFR 1910.134 (b)(10) and found to be medically

   (✓) qualified to work in respiratory protection.
   ( ) not qualified to work in respiratory protection.

My evaluation has been based on the following information, as provided to me by the employer.

(✓) A copy of OSHA Standard 29 CFR 1910.120 and appendices.
( ) A description of the employee's duties as they relate to the employee's exposures.
( ) A list of known/suspected contaminants and their concentrations (if known).
( ) A description of any personal protective equipment used or to be used.
( ) Information from previous medical examinations of the employee which is not readily available to the examining physician.

Part B

I, Robert Irvine MD, have examined Norman Crowe
Physician's Name (print) *Participant's Name (print)*
and have determined the following information:

1. Results of the medical examination and tests (excluding finding or diagnoses unrelated to occupational exposure):

   Normal Exam

Subpart	SUBCONTRACTOR HEALTH AND SAFETY	Form 2	Page 2 of 2

SUBCONTRACTOR MEDICAL APPROVAL FORM
PAGE TWO

2. Any detected medical conditions which would place the employee at increased risk of material impairment of the employee's health:

NO

3. Recommended limitations upon the employee's assigned work:

NONE

I have informed this participant of the results of this medical examination and any medical conditions which require further examination or treatment.

Based on the information provided to me, and in view of the activities and hazard potentials involved at the _____ work site, this participant

(✓) may
( ) may not

perform his/her assigned task.

Physician's Signature Robert Deming MD
Address 1989 Rte. 88 Brick NJ.
Phone Number (908) 840-8333

NOTE: Copies of test results are maintained and available at:

See above
Address

AGUILAR
ASSOCIATES AND CONSULTANTS INC.
YOUR ENVIRONMENTAL SERVICE CORPORATION

hereby certifies that

MILFORD H. BRINKERHOFF III

has successfully completed the

8 HOUR HAZWOPER REFRESHER TRAINING COURSE
in accordance with 29 CFR 1910.120(e)

given at

Matawan, New Jersey

on

January 20, 1992

Lynne J. Shawyer, CET
Instructor

92-300
I.D. Number

01/20/92
Date of Issue

Diamond Drilling Co., Inc.
Geotechnical - Environmental

RD 6, Box 365
Jackson, NJ 08527
(908) 928-0705

February 11, 1992

Halliburton NUS
910 Clopper Rd.
P. O. Box 6032
Gaithersburg, Maryland 20877-0962
Attention: Ms. Kim Hanlon

Re: Well Installation
Naval Weapons Station Earle
Solicitation No. 1298-91-0024

TRANSMITTED BY FAX

Gentlemen:

One of Diamond Drilling's employees that was to be utilized at the reference jobsite will be unable to work due to illness.

Please consider this notification that Mr. Chris Musto will be replaced by Mr. Norman W. Crane (Social Security No. 145 68 2538). Accordingly, I am forwarding evidence of Mr. Crane's participation in OSHA 40 hr. hazardous training and medical monitoring.

Please advise Ms. Jill Hartnell of the change with a request that the Department of Navy be notified so that Mr. Crane can pick up a pass on Thursday morning.

Should you have any questions, please advise.

Very truly yours,

DIAMOND DRILLING CO., INC.

M. H. Brinkerhoff, III

mhb:
Enclosures

U.S. ENVIRONMENTAL PROTECTION AGENCY

This Certifies That

[illegible]

HAZARDOUS MA[illegible]ERATIONS (165.5)

[illegible]

OFFICE OF EMERGENCY AND REMEDIAL RESPONSE

Course Director

Training Coordinator,
Environmental
Response Branch

THANK-YOU

9.0 DECONTAMINATION PROCEDURES

All employees and equipment leaving the work site must go through proper decontamination procedures.

Specific PPE Decontamination Procedures for Sampling Personnel

- Equipment drop
- Wash and rinse boot covers and outer gloves
- Remove tape
- Remove coveralls
- Remove boot covers and outer gloves
- Remove respirator (if worn)
- Remove inner gloves

Decontamination of Sampling Bottles or Other Equipment:

- Follow Navy and/or NJ DEP specifications.

Decontamination Evaluation and Modification

- Any grossly contaminated reusable items (i.e., boot covers) that are not visibly cleaned via decontamination efforts are to be discarded.

- Discard and replace decontaminated wash and rinse solutions when they become visibly discolored or otherwise noticeably affected.

- Screen employees with monitoring instruments before and after decontamination operations periodically.

Decontamination and/or disposal procedures for decontamination equipment, solutions, or solvents shall follow Navy directions, to be determined by the Project Manager and implemented by the Field Team Leader.

10.0 TRAINING REQUIREMENTS

10.1 INTRODUCTORY AND REFRESHER TRAINING

10.1.1 Requirements for HALLIBURTON NUS Personnel

All HALLIBURTON NUS personnel must complete 40 hours of introductory hazardous waste site training prior to performing work at NWS Earle. Additionally, HALLIBURTON NUS personnel who have had introductory training more than 12 months prior to site work must have completed eight hours of refresher training within the past 12 months before being cleared for site work.

Documentation of HALLIBURTON NUS introductory and refresher training is specified on table 10.1 (page 10-2) of this section.

10.1.2 Requirements for Subcontractors

All HALLIBURTON NUS subcontractor personnel must have completed introductory hazardous waste site training or equivalent work experience as defined in OSHA Standard 29 CFR 1910.120(e) and eight hours of refresher training meeting the requirements of 29 CFR 1910.120(e)(8) prior to performing field activities at the NWS Earle facility. HALLIBURTON NUS subcontractors must certify that each employee has had such training by sending HALLIBURTON NUS a letter, on company letterhead, containing the information in the example letter provided as figure 10.1 (page 10-3). Figures 10.1 and 8.2 can be combined into one letter.

10.2 SITE-SPECIFIC TRAINING

HALLIBURTON NUS will provide site-specific training to all HALLIBURTON NUS employees who will perform work on this project. This training will only be provided once, and personnel who do not attend will be not permitted to perform work at this project. Site-specific training will include

- Names of personnel and alternates responsible for site safety and health
- Safety, health, and other hazards present on site
- Use of PPE
- Work practices to minimize risks from hazards

Safe use of engineering controls and equipment

- Medical surveillance requirements
- Signs and symptoms of overexposure
- The contents of the health and safety plan and addenda
- The elements of the site emergency response plan

This training will be documented using figure 10.2 (page 10-4).

TABLE 10.1

PREVIOUS TRAINING RECORD

Name	Type(s) of Training Received	Date(s) Training Received
Jill Hartnell	40-Hour Introductory 8-Hour Refresher 8-Hour Supervisory	January 1990 March 1991 March 1991
Randy Patarcity	40-Hour Introductory 8-Hour Refresher 8-Hour Supervisory	July 1986 August 1991 August 1991

The following statements must be typed on company letterhead and signed by an officer of the company.

LOGO
XYZ CORPORATION
555 E. 5th Street
Nowheresville, Kansas 55555

Month, day, year

Ms. Jill Hartnell
HALLIBURTON NUS Environmental Corporation
999 West Valley Road
Wayne, Pennsylvania 19087

Subject: OSHA Compliance and Training
Naval Weapons Station (NWS) Earle

Dear Ms. Hartnell:

As an officer of XYZ Corporation, I hereby state that I am aware of the potentially hazardous nature of the subject project. I also understand that it is our responsibility to comply with all applicable occupational safety and health regulations including those stipulated in Title 29 of the Code of Federal Regulations (CFR), Parts 1900 through 1910 and Part 1926.

I also understand that Title 29 CFR 1910.120, "Hazardous Waste Operations and Emergency Response: Final Rule," requires, but is not limited to, medical surveillance, for applicable employees, and appropriate level of training as required in paragraph (e) of 29 CFR 1910.120 for employees engaged in certain hazardous waste operations. I hereby state that I have reviewed these requirements; that I understand Title 29 of the CFR, Parts 1900 through 1910, and Part 1926; and that XYZ Corporation and all of its employees who will perform work at the NWS Earle Facility are in full compliance.

The following employees have had 40 hours of introductory hazardous waste site training or equivalent work experience as required by 29 CFR 1910.120(e) and have had 8 hours of refresher training as required by 29 CFR 1910.120(e)(8).

LIST EMPLOYEE NAMES, TYPE(S) OF TRAINING RECEIVED, AND DATES OF TRAINING HERE

Sincerely,

(Name of Company Officer)
Title

FIGURE 10.1

OSHA COMPLIANCE LETTER

HALLIBURTON NUS
Environmental Corporation

My signature below indicates that I am aware of the potential hazardous nature of performing pre-design investigation activities at the Naval Aviation Supply Office and that I have received site-specific training, which included the elements presented below:

- Names of personnel and alternates responsible for safety and health
- Safety, health, and other hazards present on site
- Use of personal protective equipment
- Work practices to minimize risks from hazards
- Safe use of engineering controls and equipment
- Medical surveillance requirements
- Signs and symptoms of overexposure
- The contents of the health and safety plan and addenda
- The elements of the site emergency response plan

I further state that I have been given the opportunity to ask questions and that all of my questions have been answered to my satisfaction.

Name	Signature	Date
Jill Ann Hardwell	Jill Ann Hardwell	1-28-92
Ralph R Patarcik	Ralph R Patarcik	1-28-92
[illegible]	[illegible]	2-13-92
Jim Hillman	[illegible]	2-13-92
Norman Cook	Norman Cook	2-13-92

FIGURE 10.2

SITE-SPECIFIC TRAINING DOCUMENTATION

HALLIBURTON NUS
Environmental Corporation

11.0 EMERGENCY RESPONSE PLAN (ERP)

Through the course of site activities, potentials for emergency response efforts exist. Pre-emergency planning (such as determining and/or verifying appropriate off-site emergency response agencies) is the responsibility of the site HSO. Emergency reference information is included in Site Standard Work Practices (section 5.0) of this HASP. The site HSO is also responsible for determining and documenting the following information, upon arrival at the NWS Earle Site, prior to the initiation of any field activities and for communicating these requirements to all affected site personnel.

In the event of any on-site emergencies (i.e., fires, significant spills or releases, etc.), site personnel shall be immediately evacuated to a safe place of refuge and shall notify the HALLIBURTON NUS Project Manager (Jill Hartnell) and the HSM (Matthew M. Soltis) and any appropriate off-site response agencies. In view of this approach, this section of the HASP is provided to be in compliance with OSHA Standard 29 CFR 1910.38(a) [as permitted by OSHA 29 CFR 1910.120 (l)(1)(ii)].

11.1 EMERGENCY ESCAPE PROCEDURES AND ESCAPE ROUTE ASSIGNMENTS

Emergency escape routes and safe places of refuge shall be identified and established for each of the work site locations and communicated to all affected personnel prior to task initiation. When these routes and locations are designated, consideration shall be given to factors such as accessibility, prevalent and/or existing wind speed and direction, distance from potentially affected areas, etc. The information shall be modified, if necessary, as work progresses. Any such modifications shall be effected by the site HSO.

11.2 PROCEDURES TO BE FOLLOWED BY PERSONNEL WHO MUST REMAIN ON SITE TO OPERATE ANY CRITICAL OPERATIONS BEFORE EVACUATING

If the designated emergency evacuation signal (see section 11.6) is given, all personnel at the work site are to immediately report to the designated safe place of refuge via the identified primary (or secondary) emergency escape routes indicated by the site HSO. At the time of this ERP preparation, it is not anticipated that any personnel will need to remain at their work site to maintain any critical operations. If this condition should change, the site HSO shall identify the personnel and their responsibilities in this regard and amend this plan accordingly. Any such modifications must be communicated to the HALLIBURTON NUS HSM for concurrence.

11.3 PROCEDURES TO ACCOUNT FOR ALL PERSONNEL FOLLOWING AN EVACUATION

In the event that an emergency evacuation is effected during the course of site work at any of the site areas, personnel shall immediately report to the designated refuge location and remain there. The HSO, assisted by the FTL, shall conduct a roll call (using the site logbook) to account for all personnel to ensure that a total work site evacuation has taken place. The FTL shall be responsible for concurrently initiating the emergency communication procedure (notifying NWS Earle personn l, calling for off-site response agency assistance such as fire department, ambulance, police, etc.). If/when all personnel have been accounted for, an evaluation of the event that led to the evacuation shall be conducted to determine if work is to be resumed (and, if so, under what conditions - if any) or if personnel are to go through any necessary decontamination efforts and leave the site. This evaluation is to be performed by the site HSO, with assistance from the FTL and guidance from the HALLIBURTON NUS HSM and appropriate NWS Earle personnel. Under no circumstances are workers to depart from the refuge location until so directed.

If the roll call identifies that any personnel are not accounted for, this information shall be immediately communicated to the off-site emergency response agency upon their arrival. This information is to be supplemented with any additional information available that could be of assistance in conducting rescue operations (i.e., last known location of the missing personnel, etc.). Site personnel are not authorized to participate in emergency response/rescue operations.

11.4 RESCUE AND MEDICAL DUTIES

Site personnel are not authorized to participate in rescue and first aid procedures. However, any personnel present who are trained to perform emergency first aid activities may perform these functions if needed. Any such personnel are identified below:

	Name	Trained In	Certified By	Expiration Date of Certification
1.	Jill Hartnell	Adult CPR/First Aid	American Red Cross	March 1992

Any use of first aid equipment must be documented on the attached First Aid Supply Usage Form (page 11-3).

FIRST AID SUPPLY USAGE FORM

Project Number	Date	Item(s) Used	Kit Number

Please submit this form as soon as possible to the HALLIBURTON NUS Equipment Manager for first aid supply replenishment.

none used - JHardwell 3/2/92

11.5 EMERGENCY REPORTING PROCEDURES

Upon arrival at the work site, prior to the initiation of any field activities, the site HSO shall obtain the information specified on the attached Emergency Reference and American Red Cross First Aid forms and post copies of these near all on-site telephones. (Exhibits 1 and 2 in section 5.0).

Emergency reporting functions shall be the responsibility of the FTL. The FTL will become thoroughly familiar with this plan prior to the initiation of any site work activities. Additionally, prior to work start-up, the FTL and the site HSO shall contact any nearby emergency response agencies whose services may be needed to make information available to them in regard to possible hazards that may be encountered in performing emergency response functions.

In the event that an emergency incident occurs and off-site response assistance is necessary, the FTL shall contact the appropriate agency (or agencies) and communicate the following information:

- Nature of the incident (fire, spill, chemical exposure, physical injury, etc.)
- Number of injuries and type(s) of injury (injuries)
- Possible contaminants that may be encountered in response efforts

On-site emergency event coordination efforts (i.e., controlling the affected areas, accounting for site personnel, etc.) shall be the responsibility of the HALLIBURTON NUS site HSO, until/unless relieved of these duties by the arrival of NWS Earle personnel or appropriate off-site emergency response personnel.

11.6 SITE EMERGENCY ALARM SYSTEM

Work areas are anticipated to consist of small areas where all personnel are within visible and audible range of each other and will therefore not need any special alarm systems as long as verbal communication is not hampered.

11.7 ERP INITIAL TRAINING AND REFRESHER TRAINING

All site personnel shall be trained in the contents of this ERP as part of the initial site-specific health and safety training. All site visitors shall be informed of restricted areas, emergency communication signals, refuge location, and other safety requirements. Site visitors must be escorted by HALLIBURTON NUS or NWS Earle personnel at all times. Any visitors must also be entered in the site logbook so they can be accounted for in the event of any evacuations.

Refresher training on emergency response shall also be conducted for site personnel if employees' responsibilities or designated actions under the plan change or if the contents of this plan are changed.

12.0 CONFINED-SPACE OPERATIONS

No confined-space operations are anticipated to be involved in the performance of planned project activities. Therefore, specific procedures for such efforts are not applicable and are not addressed in this HASP.

13.0 FIELD TEAM REVIEW

Must be signed by each field team member prior to the site visit.

I have read and understand the contents of this HASP and will comply with its provisions, requirements, and restrictions.

Site: NWS Earle (Building C-17)

Name (PRINT)	Signature	Date
Jill Ann Hartnell	J Hartnell	1-28-92
Randy Bitarcik	[illegible]	1-28-92
Will Brinkerhoff	[illegible]	2-13-92
[illegible]	[illegible]	2-13-92
Jim Hillman	[illegible]	2-13-92

14.0 SPILL CONTAINMENT PROGRAM

In case of an accidental spill, notify the on-site Emergency Personnel in the NWS Earle Fire Department at (908) 577-2333. This department will respond themselves or make the necessary arrangements. The FTL shall activate, if necessary, the Emergency Response Plan specified in the HASP (Section 11.0).

APPENDIX A

SITE HEALTH AND SAFETY FOLLOW-UP REPORT

SITE HEALTH AND SAFETY FOLLOW-UP REPORT

Appendix A must be filled out and returned to the Site Health and Safety Officer after each site visit.

Person responsible for follow-up report: Jill Hartnell

Actual date(s) of work: event ① Jan 28 to Feb. 3, 1992 excavation + soil sam
② Feb. 13 + 14, 1992 well installation
③ Mar. 3, 1992 well sampling

1. **Actual Project Team:**

HALLIBURTON NUS Personnel	Discipline/Tasks	
Jill Hartnell	Project Manager / FTL	event ①②
Randy Potarcity	SSO	event ①③
Jill Hartnell	SSO	event ③

Non-HALLIBURTON NUS Personnel	Discipline/Tasks	
M. Brinkerhoff III	Diamond Drilling / well installation	event ③
N. Crane	" / "	event ③
J. Hillman	" / "	event ③

2. **Personal Protective Equipment Used:**

• Level of Respiratory Protection Used	Activity
Level D	soil sampling (event 1)
"	well installation + development (event 2)
"	well sampling (event 3)

• Field Dress	Activity
PE-coated tyvek coveralls,	soil sampling (event 1)
nitrile inner gloves, nitrile	
outer gloves, boot covers	
PE-coated tyvek coveralls,	well installation + development
nitrile inner gloves, ~~nitrile~~ work gloves	(event 2)
PE-coated tyvek coveralls,	well sampling (event 3)
nitrile inner gloves, nitrile	
outer gloves,	

3. **General Safety**

Were any health or safety problems encountered while on site?

Explain: no

4. **Incident Report Informat**

Did any team member report:	Yes	No
• Chemical exposure		✓
• Illness, discomfort, or unusual symptoms		✓
• Environmental problems (heat, cold, etc.)		✓
• Injury		✓

Explain: _____

Was an Employee Incident Report Completed? n/a _____ Yes _____ No

5. **Evaluation of Site Health and Safety Plan**

Was Health and Safety Plan adequate? ✓ Yes _____ No

What changes would you recommend?

none

FIRST AID SUPPLIES USAGE FORM

Project Number	Date	Item(s) Used	Kit Number

Please submit this information as soon as possible to the HALLIBURTON NUS/EMG Equipment Manager for first-aid supply replenishment. Telephone number: (412) 262-4583.

none used

n/a

SCBA LOG

Site: _____

Location: _____

Dates of Investigation: _____

User	Date of Use	SCBA Number	Satisfactory Checkout (Yes/No - Initials)	Date Cleaned

SCBA Performance Comments:

_____ Site Manager

_____ Date

Return to HSO at Completion of Activity

n/a

AIR-PURIFYING RESPIRATOR LOG

Type of Respirator: _____

Site: _____

Location: _____

Dates of Investigation: _____

User	Date of Use	Cleaned and Inspected Prior to Use (Initials)	Cartridges Changed Prior to Use (Yes/No)	Total Hours on Cartridge

_____ Site Manager

_____ Date

Return to HSO at Completion of Activity

n/a

INCIDENT REPORT

Report No. _____

Site: _____ Project No. _____

Location: _____

Date of Report: _____ Preparer's Name: _____

Name and Address of Injured: _____ SSN: _____ Age: _____

_____ Sex: _____

Years of Service: _____ Time at Present Job: _____ Title/Classification: _____

Division/Department: _____ Date of Incident: _____ Time: _____

Incident Category: _____ Motor Vehicle _____ Property Damage _____ Fir

_____ Chemical Exposure _____ Near Miss _____ Other

Severity of Injury of Illness: _____ Nondisabling _____ Disabling

_____ Medical Treatment _____ Fatality

Amount of Damage: $_____ Property Damage: _____

Estimated Number of Days Away from Job: _____

Nature of Injury or Illness: _____

1. <u>Classification of Injury</u>:

_____	Fractures	_____	Heat Burns	_____	Cold Exposure
_____	Dislocations	_____	Chemical Burns	_____	Frostbite
_____	Sprains	_____	Radiation Burns	_____	Heat Stroke
_____	Abrasions	_____	Bruises	_____	Heat Exhaustion
_____	Lacerations	_____	Blisters	_____	Concussion
_____	Punctures	_____	Toxic Respiratory	_____	Faint/Dizziness
_____	Bites		Exposure	_____	Toxic Respiratory
_____	Respiratory Allergy	_____	Toxic Ingestion	_____	Dermal Allergy

Part of Body Affected: _____

Degree of Disability: _____

Date Medical Care Was Received: _____

Where Medical Care Was Received: _____

Address (if off site): _____

2. <u>Incident Location</u>

Causative agent most directly related to accident (object, substance, material, machinery, equipment, conditions): _____

Was weather a factor? _____

Unsafe mechanical/physical/environmental condition at time of accident (be specific):

Unsafe act by injured and/or others contributing to the accident (be specific, must be answered):

Personal factors (improper attitude, lack of knowledge or skill, slow reaction, fatigue):

Level of personal protection equipment required in Site Safety Plan:

Modifications: _____

Was injured using required equipment? _____

It not, how did actual equipment use differ from plan? _____

_____

_____

_____

What can be done to prevent a recurrence of this type of accident (modification of machine, mechanical guards, correct environment, training)?

_____

_____

_____

Detailed narrative description (how did accident occur, why; objects, equipment, tools used, circumstances, assigned duties). Be specific.

_____

_____

_____

(Use back of sheet, if required)

Witnesses to accident: _____

_____

_____

Signature of Preparer _____

Signature of Site Manager _____

3. <u>Department Appraisal and Recommendation</u>

In your opinion, what actions or equipment contributed to this accident?

_____

_____

_____

Your recommendation:

_____

_____

_____

Date: _____ Signature of Department Manager _____

4. **Costs f the Incident (t be c mpleted by Health Sciences Department)**

Temporary total	_____	Permanent partial	_____
Death or permanent total	_____		
Started losing time	_____	Part of body	_____
Returned to work	_____	Percent loss or	
Time charge	_____	loss of use	_____
		Time charge	_____
Compensation	$_____	Medical	$_____
Other	$_____	Total	$_____

Name and Address
of Hospital _____
_____

Name and Address
of Physician _____
_____

cc: Office Health and Safety Supervisor
Administrative Manager
Manager of Health Sciences
Medical Consultant

INCIDENT FOLLOW-UP REPORT

(T be C mpleted by Health Sciences Department)

Date of Incident: _____

Name: _____ Employee No. _____

Site: _____

Brief description of incident: _____

Outcome of incident: _____

Physician's recommendations: _____

Date returned to work: _____

ATTACH ANY ADDITIONAL INFORMATION TO THIS FORM

cc: Office Health and Safety Supervisor
Administrative Manager
Manager of Health Sciences
Medical Consultant

HALLIBURTON NUS
Environmental Corporation

SAMPLE LOG SHEET

- ☐ Surface Soil
- ☒ Subsurface Soil
- ☐ Sediment
- ☐ Lagoon / Pond
- ☐ Other _____

Page 1 of 1

Case # _____

By _____

Project Site Name NWS Earle (OU 31) Project Site Number 3916

NUS Source No. E-S-01 Source Location Diesel Delivery Line

Sample Method: Trowel	Composite Sample Data		
	Sample	Time	Color / Description
Depth Sampled: 2' 4"			
Sample Date & Time: 1-31-92 1227			
Sampled By: JA Hartnell			
Signature(s): J Hartnell			
Type of Sample			
☒ Low Concentration			
☐ High Concentration			
☒ Grab			
☐ Composite			
☐ Grab - Composite			

Sample Data	
Color	Description: (Sand, Clay, Dry; Moist, Wet, etc.)
brown	m. to c.g. clayey sand

Analysis:

VOA + 15 xylene
TPH / lead

Observations / Notes

slight petroleum odor

HNU 30 ppm - headspace

	Organic	Inorganic
Traffic Report #	n/a	n/a
Tag #	n/a	n/a
AB #	n/a	n/a
Date Shipped	1-31-92	1-31-92
Time Shipped	n/a	n/a
Lab	Ceimic Corp.	Ceimic Corp
Volume		

HALLIBURTON NUS
Environmental Corporation

SAMPLE LOG SHEET

- ☐ Surface Soil
- ☒ Subsurface Soil
- ☐ Sediment
- ☐ Lagoon / Pond
- ☐ Other _____

Page 1 of 1

Case # _____

By _____

Project Site Name NWS Earle (CTO 31) Project Site Number 3916

NUS Source No. E-S-02 Source Location Diesel Delivery Line

Sample Method: Trowel	Composite Sample Data		
	Sample	Time	Color / Description
Depth Sampled: 3'			
Sample Date & Time: 1-31-92 1244			
Sampled By: JA Hartrell			
Signature(s): J Hartrell			
Type of Sample			
☒ Low Concentration			
☐ High Concentration			
☒ Grab			
☐ Composite			
☐ Grab - Composite			

Sample Data	
Color	Description: (Sand, Clay, Dry; Moist, Wet, etc.)
brown	m.g. sand, damp

Analysis:

VOA + 15 xylene
TPH / lead

Observations / Notes

heavy petroleum odor

HNu 40 ppm - head space

	Organic	Inorganic
Traffic Report #	n/a	n/a
Tag #	n/a	n/a
AB #	n/a	n/a
Date Shipped	1-31-92	1-31-92
Time Shipped	n/a	n/a
Lab	Ceimic Corp.	Ceimic Corp
Volume		

HALLIBURTON NUS
Environmental Corporation

SAMPLE LOG SHEET

Page 1 of 1

Case # _____

By _____

- ☐ Surface Soil
- ☒ Subsurface Soil
- ☐ Sediment
- ☐ Lagoon / Pond
- ☐ Other _____

Project Site Name NWS Earle (OU 31) Project Site Number 3916

NUS Source No. E-S-03 Source Location Diesel Delivery Line

	Composite Sample Data		
	Sample	Time	Color / Description
Sample Method: Trowel			
Depth Sampled: 3'			
Sample Date & Time: 1-31-92 1251			
Sampled By: JA Hartnell			
Signature(s): J Hartnell			
Type of Sample			
☒ Low Concentration			
☐ High Concentration			
☒ Grab			
☐ Composite			
☐ Grab - Composite			

Sample Data	
Color	Description: (Sand, Clay, Dry; Moist, Wet, etc.)
gray	m.g. well-sorted sand, damp

Analysis:

VOA + 15 xylene
TPH / lead

Observations / Notes

heavy petroleum odor

HNU 6 ppm - head space

	Organic	Inorganic
Traffic Report #	n/a	n/a
Tag #	n/a	n/a
AB #	n/a	n/a
Date Shipped	1-31-92	1-31-92
Time Shipped	n/a	n/a
Lab	Ceimic Corp.	Ceimic Corp
Volume		

HALLIBURTON NUS
Environmental Corporation

SAMPLE LOG SHEET

Page 1 of 1

- ☐ Surface Soil
- ☒ Subsurface Soil
- ☐ Sediment
- ☐ Lagoon / Pond
- ☐ Other _____

Case # _____

By _____

Project Site Name NWS Earle (OU 31) Project Site Number 3916

NUS Source No. E-S-04 Source Location Diesel Delivery Line

Sample Method: Trowel	Composite Sample Data		
	Sample	Time	Color / Description
Depth Sampled: 3'			
Sample Date & Time: 1-31-92 1255			
Sampled By: JA Hartnell			
Signature(s): J Hartnell			
Type of Sample: ☒ Low Concentration ☐ High Concentration ☒ Grab ☐ Composite ☐ Grab - Composite			

Sample Data	
Color	Description: (Sand, Clay, Dry; Moist, Wet, etc.)
gray	m.g. Sand, well-sorted, damp

Analysis:
VOA + 15 xylene
TPH / lead

Observations / Notes
heavy petroleum odor

HNU - 60 ppm headspace

	Organic	Inorganic
Traffic Report #	n/a	n/a
Tag #	n/a	n/a
AB #	n/a	n/a
Date Shipped	1-31-92	1-31-92
Time Shipped	n/a	n/a
Lab	Ceimic Corp.	Ceimic Corp
Volume		

HALLIBURTON NUS
Environmental Corporation

SAMPLE LOG SHEET

Page 1 of 1

Case # _____

By _____

- ☐ Surface Soil
- ☒ Subsurface Soil
- ☐ Sediment
- ☐ Lagoon / Pond
- ☐ Other _____

Project Site Name NWS Earle (OTO 31) Project Site Number 3916

NUS Source No. E-S-05 Source Location Diesel Delivery Line

Sample Method: Trowel	Composite Sample Data		
	Sample	Time	Color / Description
Depth Sampled: 3'			
Sample Date & Time: 1-31-92 1300			
Sampled By: JA Hartnell			
Signature(s): J Hartnell			
Type of Sample			
☒ Low Concentration			
☐ High Concentration			
☒ Grab			
☐ Composite			
☐ Grab - Composite			

Sample Data	
Color	Description: (Sand, Clay, Dry, Moist, Wet, etc.)
brown	m.g. sand, well sorted

Analysis:

VOA + 15, xylene

TPH / lead

Observations / Notes

slight petroleum odor

HNU 60 ppm - headspace

	Organic	Inorganic
Traffic Report #	n/a	n/a
Tag #	n/a	n/a
AB #	n/a	n/a
Date Shipped	1-31-92	1-31-92
Time Shipped	n/a	n/a
Lab	Ceimic Corp.	Ceimic Corp
Volume		

HALLIBURTON NUS
Environmental Corporation

SAMPLE LOG SHEET

- ☐ Surface Soil
- ☒ Subsurface Soil
- ☐ Sediment
- ☐ Lagoon / Pond
- ☐ Other _____

Page 1 of 1

Case # _____

By _____

Project Site Name NWS Earle (CTO 31) Project Site Number 3916

NUS Source No. E-S-06 Source Location Diesel Delivery Line

Sample Method: Trowel	Composite Sample Data		
	Sample	Time	Color / Descripti n
Depth Sampled: 3'			
Sample Date & Time: 1-31-92 1320			
Sampled By: JA Hartnell			
Signature(s): J Hartnell			
Type of Sample			
☒ Low Concentration			
☐ High Concentration			
☒ Grab			
☐ Composite			
☐ Grab - Composite			

Sample Data	
Color	Description: (Sand, Clay, Dry; Moist, Wet, etc.)
dk brown	m.g. clayey sand, well sorted

Analysis:

VOA + 15 xylene
TPH / lead

Observations / Notes

slight petroleum odor

HNU - 70 ppm head space

	Organic	Inorganic
Traffic Report #	n/a	n/a
Tag #	n/a	n/a
AB #	n/a	n/a
Date Shipped	1-31-92	1-31-92
Time Shipped	n/a	n/a
Lab	Ceimic Corp.	Ceimic Corp
Volume		

HALLIBURTON NUS
Environmental Corporation

SAMPLE LOG SHEET

- ☐ Surface Soil
- ☒ Subsurface Soil
- ☐ Sediment
- ☐ Lagoon / Pond
- ☐ Other _____

Page 1 of 1

Case # _____

By _____

Project Site Name NWS Earle (CTO 31) Project Site Number 3916

NUS Source No. E-S-07 Source Location Diesel Delivery Line

Sample Method: Trowel	Composite Sample Data		
	Sample	Time	Color / Description
Depth Sampled: 3.5'			
Sample Date & Time: 1-31-92 1330			
Sampled By: JA Hartnell			
Signature(s): J Hartnell			
Type of Sample			
☒ Low Concentration			
☐ High Concentration			
☒ Grab			
☐ Composite			
☐ Grab - Composite			

Sample Data	
Color	Description: (Sand, Clay, Dry, Moist, Wet, etc.)
tan	m. to c.g. pebbly sand

Analysis:

VOA + 15 xylene
TPH / lead

Observations / Notes

Slight petroleum odor

HNU 11 ppm - headspace

	Organic	Inorganic
Traffic Report #	n/a	n/a
Tag #	n/a	n/a
AB #	n/a	n/a
Date Shipped	1-31-92	1-31-92
Time Shipped	n/a	n/a
Lab	Ceimic Corp.	Ceimic Corp
Volume		

HALLIBURTON NUS
Environmental Corporation

SAMPLE LOG SHEET

Page 1 of 1

Case # _____

By _____

- ☐ Surface Soil
- ☒ Subsurface Soil
- ☐ Sediment
- ☐ Lagoon / Pond
- ☐ Other _____

Project Site Name NWS Earle (OU 31) Project Site Number 3916

NUS Source No. E-S-07D Source Location Diesel Delivery Line

Sample Method: Trowel	Composite Sample Data		
	Sample	Time	Color / Description
Depth Sampled: 3.5'			
Sample Date & Time: 1-31-92 1330			
Sampled By: JA Hartnell			
Signature(s): J Hartnell			
Type of Sample			
☒ Low Concentration			
☐ High Concentration			
☒ Grab			
☐ Composite			
☐ Grab - Composite			

Sample Data	
Color	Description: (Sand, Clay, Dry, Moist, Wet, etc.)
tan	m. to c.g., pebbly sand

Analysis:

VOA + 15, xylene
TPH / lead

Observations / Notes

slight petroleum odor

HNU 11 ppm - head space

	Organic	Inorganic
Traffic Report #	n/a	n/a
Tag #	n/a	n/a
AB #	n/a	n/a
Date Shipped	1-31-92	1-31-92
Time Shipped	n/a	n/a
Lab	Ceimic Corp.	Ceimic Corp
Volume		

HALLIBURTON NUS
Environmental Corporation

SAMPLE LOG SHEET

- ☐ Surface S il
- ☒ Subsurface Soil
- ☐ Sediment
- ☐ Lagoon / Pond
- ☐ Other _____

Page 1 of 1

Case # _____

By _____

Project Site Name NWS Earle (CTO 31) Project Site Number 3916

NUS Source No. E-S-08 Source Location Gasoline Delivery Line

Sample Method: Trowel	Composite Sample Data		
	Sample	Time	Color / Description
Depth Sampled: 3.5'			
Sample Date & Time: 1-31-92 1345			
Sampled By: JA Hartnell			
Signature(s): J Hartnell			
Type of Sample			
☒ Low Concentration			
☐ High Concentration			
☒ Grab			
☐ Composite			
☐ Grab - Composite			

Sample Data	
Color	Description: (Sand, Clay, Dry; Moist, Wet, etc.)
tan	m.g. pebbly sand

Analysis:

VOA + 15, xylene

TPH / lead

Observations / Notes

slight petroleum odor

HNU 5 ppm headspace

	Organic	Inorganic
Traffic Report #	n/a	n/a
Tag #	n/a	n/a
AB #	n/a	n/a
Date Shipped	1-31-92	1-31-92
Time Shipped	n/a	n/a
Lab	Ceimic Corp.	Ceimic Corp
Volume		

HALLIBURTON NUS
Environmental Corporation

SAMPLE LOG SHEET

Page 1 of 1

Case # _____

By _____

- ☐ Surface Soil
- ☒ Subsurface Soil
- ☐ Sediment
- ☐ Lagoon / Pond
- ☐ Other _____

Project Site Name NWS Earle (CTO 31) Project Site Number 3916

NUS Source No. E-S-09 Source Location Gasolene Delivery Line

Sample Method: Trowel	Composite Sample Data		
	Sample	Time	Color / Description
Depth Sampled: 3.5'			
Sample Date & Time: 1-31-92 1355			
Sampled By: JA Hartnell			
Signature(s): J Hartnell			
Type of Sample			
☒ Low Concentration			
☐ High Concentration			
☒ Grab			
☐ Composite			
☐ Grab - Composite			

Sample Data	
Color	Description: (Sand, Clay, Dry, Moist, Wet, etc.)
gray/tan	m. to c.g. pebbly sand

Analysis:

VOA + 15, xylene

TPH / lead

Observations / Notes

petroleum odor

HNU 20 ppm - headspace

	Organic	Inorganic
Traffic Report #	n/a	n/a
Tag #	n/a	n/a
AB #	n/a	n/a
Date Shipped	1-31-92	1-31-92
Time Shipped	n/a	n/a
Lab	Ceimic Corp.	Ceimic Corp
V lume		

HALLIBURTON NUS
Environmental Corporation

SAMPLE LOG SHEET

- ☐ Surface Soil
- ☒ Subsurface Soil
- ☐ Sediment
- ☐ Lagoon / Pond
- ☐ Other _____

Page 1 of 1

Case # _____

By _____

Project Site Name NWS Earle (CTO 31) Project Site Number 3916

NUS Source No. E-S-10 Source Location Gasoline Delivery Line

	Composite Sample Data		
	Sample	Time	Color / Description
Sample Method: Trowel			
Depth Sampled: 3'			
Sample Date & Time: 2-3-92 1040			
Sampled By: JA Hartnell			
Signature(s): J Hartnell			
Type of Sample			
☒ Low Concentration			
☐ High Concentration			
☒ Grab			
☐ Composite			
☐ Grab - Composite			

Sample Data

Color	Description: (Sand, Clay, Dry, Moist, Wet, etc.)
tan	m.g. sand, well sorted

Analysis:

VOA + 15, xylene

TPH / lead

Observations / Notes

petroleum odor

HNU 150 ppm - head space

	Organic	Inorganic
Traffic Report #	n/a	n/a
Tag #	n/a	n/a
AB #	n/a	n/a
Date Shipped	2-3-92	2-3-92
Time Shipped	n/a	n/a
Lab	Ceimic Corp.	Ceimic Corp
Volume		

HALLIBURTON NUS
Environmental Corporation

SAMPLE LOG SHEET

Page 1 of 1

Case # _____

By _____

- ☐ Surface Soil
- ☒ Subsurface Soil
- ☐ Sediment
- ☐ Lagoon / Pond
- ☐ Other _____

Project Site Name NWS Earle (OTO 31) Project Site Number 3916

NUS Source No. E-S-11 Source Location Diesel Delivery Line

Sample Method: Trowel	Composite Sample Data		
	Sample	Time	Color / Descripti n
Depth Sampled: 3'			
Sample Date & Time: 2-3-92 1150			
Sampled By: JA Hartnell			
Signature(s): J Hartnell			
Type of Sample			
☒ Low Concentration			
☐ High Concentration			
☒ Grab			
☐ Composite			
☐ Grab - Composite			

Sample Data	
Color	Description: (Sand, Clay, Dry, Moist, Wet, etc.)
tan	m.g. sand

Analysis:

VOA + 15 xylene

TPH / lead

Observations / Notes

petroleum odor

HNU 0 ppm - headspace

	Organic	Inorganic
Traffic Report #	n/a	n/a
Tag #	n/a	n/a
AB #	n/a	n/a
Date Shipped	2-3-92	2-3-92
Time Shipped	n/a	n/a
Lab	Ceimic Corp.	Ceimic Corp
Volume		

HALLIBURTON NUS
Environmental Corporation

SAMPLE LOG SHEET

- ☐ Surface Soil
- ☒ Subsurface Soil
- ☐ Sediment
- ☐ Lagoon / Pond
- ☐ Other _____

Page 1 of 1

Case # _____

By _____

Project Site Name NWS Earle (CTO 31) Project Site Number 3916

NUS Source No. E-S-12 Source Location Gasolene Delivery Line

	Composite Sample Data		
	Sample	Time	Color / Description
Sample Method: Trowel			
Depth Sampled: 3'			
Sample Date & Time: 1-31-92 1410			
Sampled By: JA Hartnell			
Signature(s): J Hartnell			
Type of Sample			
☒ Low Concentration			
☐ High Concentration			
☒ Grab			
☐ Composite			
☐ Grab - Composite			

Sample Data	
Color	Description: (Sand, Clay, Dry; Moist, Wet, etc.)
tan	m.g sand, well sorted

Analysis:

VOA + 15 xylene
TPH / lead

Observations / Notes

Petroleum odor

Hnu 250 ppm headspace

	Organic	Inorganic
Traffic Report #	n/a	n/a
Tag #	n/a	n/a
AB #	n/a	n/a
Date Shipped	1-31-92	1-31-92
Time Shipped	n/a	n/a
Lab	Ceimic Corp.	Ceimic Corp
Volume		

HALLIBURTON NUS
Environmental Corporation

SAMPLE LOG SHEET

Page 1 of 1

Case # _____

By _____

- ☐ Surface Soil
- ☒ Subsurface Soil
- ☐ Sediment
- ☐ Lagoon / Pond
- ☐ Other _____

Project Site Name NWS Earle (OU 31) Project Site Number 3916

NUS Source No. E-S-13 Source Location Diesel Delivery Line

Sample Method: Trowel	Composite Sample Data		
	Sample	Time	Color / Description
Depth Sampled: 3'			
Sample Date & Time: 2-3-92 1155			
Sampled By: JA Hartnell			
Signature(s): J Hartnell			
Type of Sample			
☒ Low Concentration			
☐ High Concentration			
☒ Grab			
☐ Composite			
☐ Grab - Composite			

Sample Data	
Color	Description: (Sand, Clay, Dry, Moist, Wet, etc.)
tan	m.g. Sand

Analysis:

VOA + 15, xylene
TPH / lead

Observations / Notes

petroleum odor

HNU 0 ppm headspace

	Organic	Inorganic
Traffic Report #	n/a	n/a
Tag #	n/a	n/a
AB #	n/a	n/a
Date Shipped	2-3-92	2-3-92
Time Shipped	Na	Na
Lab	Ceimic Corp.	Ceimic Corp
Volume		

HALLIBURTON NUS
Environmental Corporation

SAMPLE LOG SHEET

Page 1 of 1

Case # _____

By _____

- ☐ Surface Soil
- ☒ Subsurface Soil
- ☐ Sediment
- ☐ Lagoon / Pond
- ☐ Other _____

Project Site Name NWS Earle (OTO 31) Project Site Number 3916

NUS Source No. E-S-14 Source Location Gasoline Delivery Line

Sample Method: Trowel	Composite Sample Data		
	Sample	Time	Color / Description
Depth Sampled: 3'			
Sample Date & Time: 2-3-92 1255			
Sampled By: JA Hartnell			
Signature(s): J Hartnell			
Type of Sample			
☒ Low Concentration			
☐ High Concentration			
☒ Grab			
☐ Composite			
☐ Grab - Composite			

Sample Data	
Color	Description: (Sand, Clay, Dry, Moist, Wet, etc.)
tan	m.g. gebbly sand, damp

Analysis:

VOA + 15, xylene
TPH / lead

Observations / Notes

petroleum odor

HNU 16 ppm - headspace

	Organic	Inorganic
Traffic Report #	n/a	n/a
Tag #	n/a	n/a
AB #	n/a	n/a
Date Shipped	2-3-92	2-3-92
Time Shipped	n/a	n/a
Lab	Ceimic Corp.	Ceimic Corp
Volume		

HALLIBURTON NUS
Environmental Corporation

SAMPLE LOG SHEET

Page 1 of 1

Case # _____

By _____

- ☐ Surface Soil
- ☒ Subsurface Soil
- ☐ Sediment
- ☐ Lagoon / Pond
- ☐ Other _____

Project Site Name NWS Earle (CTO 31) Project Site Number 3916

NUS Source No. E-S-15 Source Location Gasoline Delivery Line

Sample Method: Trowel	Composite Sample Data		
	Sample	Time	Color / Description
Depth Sampled: 3'			
Sample Date & Time: 2-3-92 1400			
Sampled By: JA Hartnell			
Signature(s): J Hartnell			
Type of Sample			
☒ Low Concentration			
☐ High Concentration			
☒ Grab			
☐ Composite			
☐ Grab - Composite			

Sample Data	
Color	Description: (Sand, Clay, Dry, Moist, Wet, etc.)
tan	m.g. pebbly sand

Analysis:

VOA + 15 xylene
TPH / lead

Observations / Notes

no odor

HNU 0ppm - headspace
(HNU reading may be suspect)

	Organic	Inorganic
Traffic Report #	n/a	n/a
Tag #	n/a	n/a
AB #	n/a	n/a
Date Shipped	2-3-92	2-3-92
Time Shipped	n/a	n/a
Lab	Ceimic Corp.	Ceimic Corp
Volume		

HALLIBURTON NUS
Environmental Corporation

SAMPLE LOG SHEET

Page 1 of 1

Case # _____

By _____

- ☐ Surface Soil
- ☒ Subsurface Soil
- ☐ Sediment
- ☐ Lagoon / Pond
- ☐ Other _____

Project Site Name NWS Earle (OTO 31) Project Site Number 3916

NUS Source No. E-S-15D Source Location Gasolene Delivery Line

Sample Method: Trowel	Composite Sample Data		
	Sample	Time	Color / Description
Depth Sampled: 3'			
Sample Date & Time: 2-3-92 1400			
Sampled By: JA Hartnell			
Signature(s): J Hartnell			
Type of Sample			
☒ Low Concentration			
☐ High Concentration			
☒ Grab			
☐ Composite			
☐ Grab - Composite			

Sample Data	
Color	Description: (Sand, Clay, Dry, Moist, Wet, etc.)
tan	m.g. pebbly sand

Analysis:

VOA + 15, xylene
TPH / lead

Observations / Notes

no odor

HNU - 0 ppm headspace
(HNU reading may be suspect)

	Organic	Inorganic
Traffic Report #	n/a	n/a
Tag #	n/a	n/a
AB #	n/a	n/a
Date Shipped	2-3-92	2-3-92
Time Shipped	n/a	n/a
Lab	Ceimic Corp.	Ceimic Corp
Volume		

HALLIBURTON NUS
Environmental Corporation

SAMPLE LOG SHEET

Page 1 of 1

Case # _____

By _____

- ☐ Surface Soil
- ☒ Subsurface Soil
- ☐ Sediment
- ☐ Lagoon / Pond
- ☐ Other _____

Project Site Name NWS Earle (CTO 31) Project Site Number 3916

NUS Source No. E-S-16 Source Location Gasolene Delivery Line

Sample Method: Trowel	Composite Sample Data		
	Sample	Time	Color / Description
Depth Sampled: 2'			
Sample Date & Time: 2-3-92 1250			
Sampled By: JA Hartnell			
Signature(s): J Hartnell			
Type of Sample			
☒ Low Concentration			
☐ High Concentration			
☒ Grab			
☐ Composite			
☐ Grab - Composite			

Sample Data	
Color	Description: (Sand, Clay, Dry, Moist, Wet, etc.)
tan	m.g. pebbly sand

Analysis:

VOA + 15 xylene
TPH / lead

Observations / Notes

no odor

HNU - 0ppm headspace
(HNU reading may be suspect)

	Organic	Inorganic
Traffic Report #	n/a	n/a
Tag #	n/a	n/a
AB #	n/a	n/a
Date Shipped	2-3-92	2-3-92
Time Shipped	n/a	n/a
Lab	Ceimic Corp.	Ceimic Corp
Volume		

HALLIBURTON NUS
Environmental Corporation

SAMPLE LOG SHEET

- ☐ Surface S il
- ☒ Subsurface Soil
- ☐ Sediment
- ☐ Lagoon / Pond
- ☐ Other _____

Page 1 of 1

Case # _____

By _____

Project Site Name NWS Earle (OU 31) Project Site Number 3916

NUS Source No. E-S-17 Source Location Gasolene Delivery Line

Sample Method: Trowel	Composite Sample Data		
	Sample	Time	Color / Description
Depth Sampled: 3'			
Sample Date & Time: 2-3-92 1315			
Sampled By: JA Hartnell			
Signature(s): J Hartnell			
Type of Sample			
☒ Low Concentration			
☐ High Concentration			
☒ Grab			
☐ Composite			
☐ Grab - Composite			

Sample Data	
Color	Description: (Sand, Clay, Dry, Moist, Wet, etc.)
tan	m.g. pebbly sand

Analysis:

VOA + 15 xylene
TPH / lead

Observations / Notes

Slight petroleum odor

HNU - 0 ppm headspace
(HNU reading may be suspect)

	Organic	Inorganic
Traffic Report #	n/a	n/a
Tag #	n/a	n/a
AB #	n/a	n/a
Date Shipped	2-3-92	2-3-92
Time Shipped	n/a	n/a
Lab	Ceimic Corp.	Ceimic Corp
Volume		

HALLIBURTON NUS
Environmental Corporation

SAMPLE LOG SHEET

Page 1 of 1

Case # _____

By _____

- ☐ Surface Soil
- ☒ Subsurface Soil
- ☐ Sediment
- ☐ Lagoon / Pond
- ☐ Other _____

Project Site Name NWS Earle (OTO 31) Project Site Number 3916

NUS Source No. E-S-18 Source Location Gasolene Delivery Line

Sample Method: Trowel	Composite Sample Data		
	Sample	Time	Color / Description
Depth Sampled: 3'			
Sample Date & Time: 2-3-92 1335			
Sampled By: JA Hartnell			
Signature(s): J Hartnell			
Type of Sample			
☒ Low Concentration			
☐ High Concentration			
☒ Grab			
☐ Composite			
☐ Grab - Composite			

Sample Data	
Color	Description: (Sand, Clay, Dry, Moist, Wet, etc.)
tan	m.g. pebbly sand

Analysis:

VOA + 15 xylene
TPH / lead

Observations / Notes

no odor

HNU - 0ppm headspace
(HNU reading may be suspect)

	Organic	Inorganic
Traffic Report #	n/a	n/a
Tag #	n/a	n/a
AB #	n/a	n/a
Date Shipped	2-3-92	2-3-92
Time Shipped	n/a	n/a
Lab	Ceimic Corp.	Ceimic Corp
Volume		

HALLIBURTON NUS
Environmental Corporation

SAMPLE LOG SHEET

- [x] Monitoring Well Data
- [ ] Domestic Well Data
- [ ] Other _____

Page 1 of 1

Case # _____

By _____

Project Site Name NWS Earle (CTO 31) Project Site Number 3916

NUS Source No. E-MW-01 Source Location MW-1

	Purge Data				
Total Well Depth: 20' 6"	Volume	pH	S.C.	Temp. (°C)	Color & Turbidity
Well Casing Size & Depth: 4" @ 20' 6"					
Static Water Level: 10.01'					
One Casing Volume: 6.86 gal					
Start Purge (hrs.): n/a					
End Purge (hrs.): n/a					
Total Purge Time (min.): n/a					
Total Amount Purged (gal.): 25					
Monitor Reading: HNU 0 ppm					
Purge Method: bailer					
Sample Method: bailer					
Depth Sampled: n/a					

Sample Date & Time:	Sample Data			
3-2-92 1155	pH	S.C.	Temp. (°C)	Color & Turbidity
Sampled By: JA Hartnell	4.85	500 micro-mhos	10°C	cloudy pale yellow >200 nTu

Signature(s): J Hartnell

Type of Sample
- [x] Low Concentration
- [ ] High Concentration
- [x] Grab
- [ ] Composite
- [ ] Grab - Composite

Observations / Notes:

1 casing volume = (20.5' - 10.01') * 0.65 gal/F

= 6.86 gal

minimum to be purged = 3 casing vol.

= 3 * 6.86 gal = 20.58 gals

Analysis:	Preservative		Organic	Inorganic
VOA+15, MTBE+	HCl	Traffic Report #	n/a	n/a
Xylene+TBA		Tag #	n/a	n/a
B/N+15,	~~HNO3~~	AB #	n/a	n/a
		Date Shipped	3-2-92	3-2-92
		Time Shipped	n/a	n/a
		Lab	Ceimic Corp	Ceimic Corp
		Volume		

HALLIBURTON NUS
Environmental Corporation

SAMPLE LOG SHEET

Page 1 of 1

- [x] Monitoring Well Data
- [ ] Domestic Well Data
- [ ] Other _____

Case # _____

By _____

Project Site Name NWS Earle Project Site Number 3916

NUS Source No. E-MW-01D Source Location MW-1

	Purge Data				
Total Well Depth: 20' 6"	Volume	pH	S.C.	Temp. (°C)	Color & Turbidity
Well Casing Size & Depth: 4" @ 20' 6"					
Static Water Level: 10.01'					
One Casing Volume: 6.86 gal					
Start Purge (hrs.): n/a					
End Purge (hrs.): n/a					
Total Purge Time (min.): n/a					
Total Amount Purged (gal.): 25					
Monitor Reading: HNU 0 ppm					
Purge Method: bailer					
Sample Method: bailer					
Depth Sampled: n/a					

Sample Date & Time:	Sample Data			
3-2-92 1155	pH	S.C.	Temp. (°C)	Color & Turbidity
Sampled By: JA Hartnell	4.85	500 micro mhos	10°C	cloudy pale yellow >200 NTU

Signature(s): JHartnell

Type of Sample
- [x] Low Concentration
- [ ] High Concentration
- [x] Grab
- [ ] Composite
- [ ] Grab - Composite

Observations / Notes:

1 casing volume = (20.5' − 10.01') * 0.654 gal/ft

= 6.86 gal

minimum to be purged = 3 casing volumes

= 3 * 6.86 gal = 20.58 gal

Analysis:	Preservative		Organic	Inorganic
VOA+15+MTBE+	HCL	Traffic Report #	n/a	n/a
Xylene + TBA		Tag #	n/a	n/a
B/N + 15		AB #	n/a	n/a
		Date Shipped	3-2-92	3-2-92
		Time Shipped	n/a	n/a
		Lab	Cermic Corp	Cermic Corp
		Volume		

HALLIBURTON NUS
Environmental Corporation

SAMPLE LOG SHEET

- ☐ Surface Soil
- ☐ Subsurface Soil
- ☐ Sediment
- ☐ Lagoon / Pond
- ☒ Other Blank

Page 1 of 1

Case # _____

By _____

Project Site Name NWS Earle (CTO-031) Project Site Number 3916

NUS Source No. E-FB-01 Source Location Field Blank

	Composite Sample Data		
	Sample	Time	Color / Description
Sample Method: n/a			
Depth Sampled: n/a			
Sample Date & Time: 1-31-92 1505			
Sampled By: JA Hardwell			
Signature(s): J Hardwell			
Type of Sample			
☒ Low Concentration			
☐ High Concentration			
☒ Grab			
☐ Composite			
☐ Grab - Composite			

Sample Data	
Color	Description: (Sand, Clay, Dry, Moist, Wet, etc.)

Analysis: VOA + 15, xylene
~~8/10+~~
TPH/lead

Observations / Notes

Field Blank

	Organic	Inorganic
Traffic Report #	n/a	n/a
Tag #	n/a	n/a
AB #	n/a	n/a
Date Shipped	1-31-92	1-31-92
Time Shipped	n/a	n/a
Lab	Ceimic Corp.	Ceimic Corp
Volume		

HALLIBURTON NUS
Environmental Corporation

SAMPLE LOG SHEET

Page 1 of 1

Case # _____

By _____

- ☐ Surface Soil
- ☐ Subsurface Soil
- ☐ Sediment
- ☐ Lagoon / Pond
- ☒ Other Blank

Project Site Name NWS Earle (CTO-31) Project Site Number 3916

NUS Source No. E-FB-02 Source Location Field Blank

Sample Method: n/a	Composite Sample Data		
	Sample	Time	Color / Description
Depth Sampled: n/a			
Sample Date & Time: 2-3-92 1455			
Sampled By: JA Hartnell			
Signature(s): J Hartnell			
Type of Sample			
☒ Low Concentration			
☐ High Concentration			
☒ Grab			
☐ Composite			
☐ Grab - Composite			

Sample Data	
Color	Description: (Sand, Clay, Dry; Moist, Wet, etc.)

Analysis:

VOA + 15, Xylene
TPH/lead

Observations / Notes

Field Blank

	Organic	In rganic
Traffic Report #	n/a	n/a
Tag #	n/a	n/a
AB #	n/a	n/a
Date Shipped	2-3-92	2-3-92
Time Shipped	n/a	n/a
Lab	Ceimic Corp	Ceimic Corp
Volume		

HALLIBURTON NUS
Environmental Corporation

SAMPLE LOG SHEET

- ☐ Monit ring Well Data
- ☐ Domestic Well Data
- ☒ Other Blank

Page 1 of 1

Case # _____

By _____

Project Site Name NWS Earle CTO-031 Project Site Number 3916

NUS Source No. E-~~MWF~~ B-03 Source Location MW-1

Total Well Depth: 20'6"	Purge Data				
Well Casing Size & Depth: 4" @ 20'6"	Volume	pH	S.C.	Temp. (°C)	Color & Turbidity
Static Water Level: 10.01'					
One Casing Volume: 6.86 gal					
Start Purge (hrs.): n/a					
End Purge (hrs.): n/a					
Total Purge Time (min.): n/a					
Total Amount Purged (gal.): 25					
Monitor Reading: n/a					
Purge Method: n/a					
Sample Method: grab					
Depth Sampled: n/a					
Sample Date & Time: 3-2-92 1215	Sample Data				
	pH	S.C.	Temp. (°C)	Col r & Turbidity	
Sampled By: JA Hartnell					
Signature(s): J Hartnell	Observations / Notes: Field Blank				

Type of Sample
- ☒ Low Concentration
- ☐ High Concentration
- ☒ Grab
- ☐ Composite
- ☐ Grab - Composite

Analysis:	Preservative		Organic	in rganic
VOA + 15 + xylene	HCL	Traffic Report #	n/a	n/a
+ TBA + MTBE		Tag #	n/a	n/a
B/N + 15				
		AB #	n/a	n/a
		Date Shipped	3-2-92	3-2-92
		Time Shipped	n/a	n/a
		Lab	Ceimic Corp	Ceimic Corp
		Volume		

HALLIBURTON NUS
Environmental Corporation

SAMPLE LOG SHEET

- ☐ Surface Soil
- ☐ Subsurface Soil
- ☐ Sediment
- ☐ Lagoon / Pond
- ☒ Other Blank

Page 1 of 1

Case # _____

By _____

Project Site Name NWS Earle (CTO - 031) Project Site Number 3916

NUS Source No. E-RB-01 Source Location Rinsate Blank

	Composite Sample Data		
Sample Method: n/a	Sample	Time	Color / Descripti n
Depth Sampled: n/a			
Sample Date & Time: 1-31-92 1510			
Sampled By: J Hardwell			
Signature(s): J Hardwell			
Type of Sample			
☒ Low Concentration			
☐ High Concentration			
☒ Grab			
☐ Composite			
☐ Grab - Composite			

Sample Data	
Color	Description: (Sand, Clay, Dry; Moist, Wet, etc.)

Analysis:

VOA + 15 xylene
TPH / lead

Observations / Notes

Rinsate Blank

	Organic	Inorganic
Traffic Report #	n/a	n/a
Tag #	n/a	n/a
AB #	n/a	n/a
Date Shipped	1-31-92	1-31-92
Time Shipped	n/a	n/a
Lab	Ceimic Corp	Ceimic Corp
Volume		

HALLIBURTON NUS
Environmental Corporation

SAMPLE LOG SHEET

Page 1 of 1

Case # _____

By _____

- ☐ Surface Soil
- ☐ Subsurface Soil
- ☐ Sediment
- ☐ Lagoon / Pond
- ☒ Other Blank

Project Site Name NWS Earle (CTO-31) Project Site Number 3916

NUS Source No. E - RB - 02 Source Location Rinsate Blank

Sample Method:	Composite Sample Data		
n/a	Sample	Time	Color / Description
Depth Sampled: n/a			
Sample Date & Time: 2-3-92 1450			
Sampled By: JA Hartnell			
Signature(s): J Hartnell			
Type of Sample			
☒ Low Concentration			
☐ High Concentration			
☒ Grab			
☐ Composite			
☐ Grab - Composite			

Sample Data	
Color	Description: (Sand, Clay, Dry, Moist, Wet, etc.)

Analysis:
VOA + 15 xylene
TPH/lead

Observations / Notes

Rinsate Blank

	Organic	Inorganic
Traffic Report #	n/a	n/a
Tag #	n/a	n/a
AB #	n/a	n/a
Date Shipped	2-3-92	2-3-92
Time Shipped	n/a	n/a
Lab	Cemia Corp	Cemia Corp
Volume		

HALLIBURTON NUS
Environmental Corporation

SAMPLE LOG SHEET

- ☐ Monitoring Well Data
- ☐ Domestic Well Data
- ☒ Other Blank

Page 1 of 1

Case # _____

By _____

Project Site Name NWS Earle CTO-031 Project Site Number 3916

NUS Source No. E-RB-03 Source Location MW-1

	Purge Data				
Total Well Depth: 20'6"					
Well Casing Size & Depth: 4" @ 20'6"	Volume	pH	S.C.	Temp. (°C)	Color & Turbidity
Static Water Level: 10.01'					
One Casing Volume: 6.86 gal					
Start Purge (hrs.): n/a					
End Purge (hrs.): n/a					
Total Purge Time (min.): n/a					
Total Amount Purged (gal.): 25					
Monitor Reading: n/a					
Purge Method: n/a					
Sample Method: grab					
Depth Sampled: n/a					
Sample Date & Time: 3-2-92 1229	Sample Data				
	pH	S.C.	Temp. (°C)	Color & Turbidity	
Sampled By: JA Hartnell					
Signature(s): J Hartnell					

Type of Sample
- ☒ Low Concentration
- ☐ High Concentration
- ☒ Grab
- ☐ Composite
- ☐ Grab - Composite

Observations / Notes:

Rinsate Blank

Analysis:	Preservative		Organic	Inorganic
VOA+15, xylene	HCL	Traffic Report #	n/a	n/a
+TBA+MTBE		Tag #	n/a	n/a
B/N+15		AB #	n/a	n/a
		Date Shipped	3-2-92	3-2-92
		Time Shipped	n/a	n/a
		Lab	Ceramic Corp	Ceramic Corp
		Volume		

HALLIBURTON NUS
Environmental Corporation

SAMPLE LOG SHEET

Page 1 of 1

Case # _____

By _____

- ☐ Surface Soil
- ☐ Subsurface Soil
- ☐ Sediment
- ☐ Lagoon / Pond
- ☒ Other Blank

Project Site Name NWS Earle (CTO-31) Project Site Number 3916

NUS Source No. E-TB-01 Source Location Trip Blank

Sample Method:	Composite Sample Data		
n/a	Sample	Time	Color / Descripti n
Depth Sampled: n/a			
Sample Date & Time: 1-31-92 1510			
Sampled By: JA Hartwell			
Signature(s): A Hartwell			
Type of Sample			
☒ Low Concentration			
☐ High Concentration			
☒ Grab			
☐ Composite			
☐ Grab - Composite			

Sample Data	
Color	Description: (Sand, Clay, Dry, Moist, Wet, etc.)

Analysis:

VOA + 15, xylene
TPH, lead

Observations / Notes

Trip Blank

	Organic	Inorganic
Traffic Report #	n/a	n/a
Tag #	n/a	n/a
AB #	n/a	n/a
Date Shipped	1-31-92	1-31-92
Time Shipped	n/a	n/a
Lab	Ceimic Corp	Ceimic Corp
Volume		

HALLIBURTON NUS
Environmental Corporation

SAMPLE LOG SHEET

Page 1 of 1

Case # _____

By _____

- ☐ Surface Soil
- ☐ Subsurface Soil
- ☐ Sediment
- ☐ Lagoon / Pond
- ☒ Other Blank

Project Site Name NWS Earle (CTO - 31) Project Site Number 3916

NUS Source No. E - TB - 02 Source Location Trip Blank

Sample Method: n/a	Composite Sample Data		
	Sample	Time	Color / Descripti n
Depth Sampled: n/a			
Sample Date & Time: 2-3-92 1500			
Sampled By: SA Hartwell			
Signature(s): Hartwell			
Type of Sample			
☒ Low Concentration			
☐ High Concentration			
☒ Grab			
☐ Composite			
☐ Grab - Composite			

Sample Data	
Color	Description: (Sand, Clay, Dry; Moist, Wet, etc.)

Analysis:

VOA + 15 Xylene
TPH/Lead

Observations / Notes

Trip Blank

	Organic	Inorganic
Traffic Report #	n/a	n/a
Tag #	n/a	n/a
AB #	n/a	n/a
Date Shipped	2-3-92	2-3-92
Time Shipped	n/a	n/a
Lab	Ceimic Corp	Ceimic Corp
Volume		

HALLIBURTON NUS
Environmental Corporation

SAMPLE LOG SHEET

- ☐ Monitoring Well Data
- ☐ Domestic Well Data
- ☒ Other Blank

Page 1 of 1

Case # _____

By _____

Project Site Name NWS Earle (CTO-031) Project Site Number 3916

NUS Source No. E-TB-03 Source Location mw-1

	Purge Data				
Total Well Depth: 20'6"					
Well Casing Size & Depth: 4" @ 20'6"	Volume	pH	S.C.	Temp. (°C)	Color & Turbidity
Static Water Level: 10.01'					
One Casing Volume: 6.86 gal					
Start Purge (hrs.): n/a					
End Purge (hrs.): n/a					
Total Purge Time (min.): n/a					
Total Amount Purged (gal.): 25					
Monitor Reading: n/a					
Purge Method: n/a					
Sample Method: grab					
Depth Sampled: n/a					
Sample Date & Time: 3-2-92 1242	Sample Data				
	pH	S.C.	Temp. (°C)	Color & Turbidity	
Sampled By: JA Hartwell					

Signature(s): J Hartwell

Type of Sample
- ☒ Low Concentration
- ☐ High Concentration
- ☒ Grab
- ☐ Composite
- ☐ Grab - Composite

Observations / Notes:

Trip Blank

Analysis:	Preservative		Organic	Inorganic
VOA+15 xylene, +TBA,MTBE	HCl	Traffic Report #	n/a	n/a
		Tag #	n/a	n/a
		AB #	n/a	n/a
		Date Shipped	3-2-92	3-2-92
		Time Shipped	n/a	n/a
		Lab	Ceramic Corp	Ceramic Corp
		Volume		