N60478.AR.000202
NWS EARLE
5090.3a

DISCHARGE INVESTIGATION AND CORRECTIVE ACTION REPORT

QUARTERS G

NWS EARLE, COLTS NECK, NEW JERSEY

FOR

NORTHERN DIVISION, NAVFAC

NAVAL BASE, PHILADELPHIA

MAY 11, 1992

K&D PROJECT #E1-1629-024

PREPARED BY

KASELAAN & D'ANGELO ASSOCIATES, INC.

A HILL GROUP COMPANY

ENVIRONMENTAL SCIENCE AND ENGINEERING

HADDON HEIGHTS, NEW JERSEY

BOSTON O LOS ANGELES O NEW ORLEANS O NEW YORK O WASHINGTON

DISCHARGE INVESTIGATION AND CORRECTIVE ACTION REPORT

QUARTERS G

NWS EARLE, COLTS NECK, NEW JERSEY

FOR

NORTHERN DIVISION, NAVFAC

NAVAL BASE, PHILADELPHIA

MAY 11, 1992

K&D PROJECT #E1-1629-024

PREPARED BY

KASELAAN & D'ANGELO ASSOCIATES, INC.

A HILL GROUP COMPANY

ENVIRONMENTAL SCIENCE AND ENGINEERING

HADDON HEIGHTS, NEW JERSEY

BOSTON O LOS ANGELES O NEW ORLEANS O NEW YORK O WASHINGTON

DISCHARGE INVESTIGATION AND CORRECTIVE ACTION REPORT

QUARTERS G

NWS EARLE, COLTS NECK, NEW JERSEY

FOR

NORTHERN DIVISION, NAVFAC
NAVAL BASE, PHILADELPHIA

MAY 11, 1992

K&D PROJECT #E1-1629-024

baw

t:11629-24

TABLE OF CONTENTS

1.0 INTRODUCTION

2.0 PROCEDURE AND METHODOLOGY

2.1 Investigation Activities
2.2 Remediation Activities

3.0 SITE CHARACTERIZATION

3.1 Physical Geography
3.2 Climate
3.3 Surface Drainage
3.4 Soils
3.5 Surficial Geology
3.6 Hydrogeology
3.6.1 Regional Hydrogeology
3.6.2 Local Hydrogeology

4.0 FINDINGS

5.0 RECOMMENDATIONS

APPENDICES

Well Search
A. Piezometer and Monitoring Well Specifications and Permits
B. Piezometer and Monitoring Well Survey Information
C. Boring Logs
D. Decontamination Procedures
E. Groundwater Sampling Procedures
F. Analytical Data and Chain of Custody Forms

FIGURES

Figure 1 - Site Plan
Figure 2 - Site Plan Details
Figure 3 - Regional Groundwater Contour Lines
Figure 4 - Surface Aquifers

TABLES

Table 1. Sample Results

1.0 INTRODUCTION

The activities under this Scope of Work consisted of the implementation and execution of the approved Plan of Action for underground storage tank (UST) discharge at the Naval Weapons Station Earle (NWSE). The investigation was used to determine any impact to the subsurface environment in proximity to the release from a 550-gallon UST at Quarters G (Registration Number UST 0151003).

The implementation of the field investigation included the installation of piezometers, generation of water level measurements and preparation of groundwater contours depicting groundwater flow direction. Field activities also included oversight of the storage tank cleaning, removal and subsequent excavation of contaminated soils. The tank removal activities along with post excavation sampling were performed by J&J Environmental, Chatham, New Jersey under a contract by NWSE. Upon interpretation of this data one (1) groundwater monitoring well was installed within ten (10) feet downgradient of the historical location of the tank system. The well was sampled and analyzed for the appropriate analytical parameters.

A detailed summary of field activities as well as an overview and interpretation of the laboratory findings are presented herein. Recommendations associated with future investigation are also provided.

In May of 1990, the UST was integrity tested using the Heath Petro-tite tank testing system. This was prompted due to the presence of petroleum vapors in the adjacent residence building. The tank system was subsequently tested. With the presence of an elevated leak rate, excavation down to the tank top ensued in order to test the tank separately from the piping system. The tank failed the initial test and retest with leak rates in excess of National Fire Protection Association (NFPA) allowable limits. Subsequent to the identification of the potential release, the Navy reported the suspected discharge to New Jersey Department of Environmental Protection and Energy (NJDEP&E) Spill Hotline (NJDEP&E Case No. 90-05-09-1324.) It should be noted that the residences were evacuated due to the presence of vapors within the structure. In response to this testing program, a Plan of Action was designed to identify the presence of subsurface contamination in proximity to the tank system.

This initially involved a site visit on October 16, 1990, along with the collection and review of available utility and historical drawings for this area. The site visit was used to gather pertinent data useful for the characterization of the area.

2.0 PROCEDURE AND METHODOLOGY

Mr. Frank Hunsberger, Hydrogeologist and Mr. Andrew Rola, P.E. of K&D visited the site (See Figure 1) on October 16, 1990 to perform a site inspection and investigation. The field investigation was conducted utilizing a HNu PI 101 photoionization detector (PID) equipped with a 10.2 ev lamp, a metal detector and visual observation. Subsequent to the field investigation, a record search of available historical drawings and geological data was obtained from the Public Works Office with the assistance of Mr. John Pawlus of NWS Earle.

Geological and hydrogeological background information was obtained from a Site Investigation Work Plan of November 1989, prepared by Roy F. Weston, Inc. for the Navy Installation Restoration program.

Old drawings of renovations to Quarters G revealed some historical evidence of the single UST's use and management, however, the actual date of the installation was not found.

In May, 1990, the tank was precision tested by the Petro-tite method because the Navy suspected possible leakage. The tank was exposed to the tank top, isolated from the lines and individually tested. The individual lines and tank were tested separately to determine the specific source of the leak. As stated in Section 1.0, the tank failed both the initial precision test and the retest with leak rates in excess of National Fire Protection Association (NFPA) allowable limits, therefore additional investigation and remedial action were required.

There was concern since the surrounding grade at Quarters G is flat and any fuel oil leakage would travel in the direction of groundwater flow or follow migration routes along subsurface utilities, storm drains or the septic system. A septic tank lies adjacent to this tank and could become contaminated with fuel oil. There also exists a basement which could become a receptor of fuel oil contamination. The basement and the septic system were investigated with an Hnu during this phase of the investigation. The HNu detects a wide range of volatile organic compounds and records the readings in parts per million (ppm) concentrations as calibrated to benzene. Readings of 12ppm and 5ppm were recorded in the basement sump and septic system, respectively (See Figure 1).

2.1 Investigation Activities

The investigation activities performed by K&D included the following:

Piezometer Installation

The installation and survey of three (3) piezometer was conducted to determine groundwater flow direction. The piezometers were installed in accordance with the NJDEP&E specification by Uni-Tech Drilling, Clayton, New Jersey under the supervision of K&D. The piezometers were designated as PZ-1, PZ-2 and PZ-3 (See Figure 1).

Groundwater Monitoring Well Installation

The installation of the groundwater monitoring well was conducted hydrologically downgradient of the UST. The well was installed on January 23, 1992 in accordance with NJDEP&E specifications by J.E. Fritts and Associates, Inc., Voorhees, New Jersey under the supervision of K&D. The well was designated as MW-2 (See Figure 1). The piezometers and monitoring well were surveyed to the nearest 0.01 of an inch by a New Jersey registered surveyor. The pertinent information (i.e. specifications, permits, forms) regarding the installation and surveying of the piezometers and monitoring well is presented in Appendix A and Appendix B.

A total of six (6) subsurface soil samples were collected by K&D during the installation of the three (3) piezometers. In addition, four (4) subsurface soil samples were collected by K&D during the installation of MW-2. A truck mounted drilling rig was used at all boring locations. Borings were advanced using standard hollow stem auger drilling equipment. Continuous soil samples were collected at two foot intervals using clean, two or three inch diameter (two foot in length) carbon steel split spoon samplers driven in advance of the augered borehole with a 140 lb. hammer. The soil samples were logged for physical composition and screened for total organic vapors using a Thermo Environmental Instruments, Inc. Model 580B Organic Vapor Meter (OVM) immediately upon their retrieval from each boring. The OVM is equipped with a PID using a 10.6 eV lamp. The boring logs are submitted as Appendix C. The samples selected for chemical analysis were collected with fully decontaminated equipment. The decontamination procedures utilized are submitted as Appendix D. The soil samples were analyzed for Total Petroleum Hydrocarbons (EPA Method 418.1) by GTEL Environmental Laboratories, Inc., Milford, New Hampshire. GTEL Environmental Laboratories, Inc. is a NJDEPE certified laboratory (Certification No. 70609).

Dedicated, field decontaminated, stainless steel spatulas were used to transfer the sample from the split spoon sampler directly into the appropriate sample container. The samples were collected in accordance with the NJDEP&E Field Sampling Procedures Manual.

All drilling and well material used in the installation of the piezometers and monitoring well were steam cleaned prior to use and between each boring location. The four inch flush mounted, flush joint, threaded, polyvinyl chloride (PVC) monitoring well was installed using the hollow stem auger method in accordance with the specifications as shown in Appendix A.

Upon completion the monitoring well was developed using a centrifugal pump. The well was developed until a turbidity-free discharge was present. All drilling and development material (mud, soil and water) were containerized in 55-gallon DOT 17H drums and stored on site.

Groundwater Sampling

The collection of a groundwater sample from MW-2 on March 3, 1992, was conducted to assess the groundwater quality. The monitoring well was allowed to stabilize or equilibrate for thirty-nine (39) days prior to sampling. The delay in sampling was caused by a shipment error by GTEL Environmental, Inc. The monitoring well was opened and a headspace analysis for total organic vapors was conducted using an OVM. The static water level was measured using a Soil Test electronic water level indicator. This was done prior to purging or evacuation of the well. The water level indicator was cleaned using distilled water prior to its use to prevent any cross contamination. The well was then purged (evacuated) using a field decontaminated PVC bottom filling bailer to provide a representative sample of the groundwater quality. A minimum of three (3) to five (5) well volumes were evacuated. The evacuation was conducted in a manner to prevent the well from going to dryness thus minimizing any cascading effects and dehydration of the saturated zone. The clean rope attached to the bailer was dedicated to prevent any introduction of contaminants.

The groundwater sample was collected within two hours of the evacuation. The sample was collected using fully decontaminated, dedicated and disposable Teflon™ bailers attached to dedicated polyethylene rope by a Teflon™ coated stainless steel leader. Disposable latex gloves were worn by the sampling team. The sample was immediately preserved according to protocol and placed in iced sample coolers. The groundwater sampling procedures are included in Appendix E.

The groundwater sample was shipped to GTEL Environmental Laboratories, Inc. The sample was analyzed for EPA Priority Pollutants List Volatile Organic Compounds (VOC) using EPA Method 624+15 and the EPA Priority Pollutants List Base/Neutral Organic Compounds (B/N) using EPA Method 625+15. In addition a trip blank and a field blank were analyzed for VOC and B/N. The purpose of the trip and field blanks was to provide an analytical check on sample handling, transport, collection process, sampling equipment decontamination, container cleaning procedure and any contamination that may have occurred in transit or in the laboratory. All samples were submitted for analysis under Chain of Custody.

A confirmation groundwater sample was collected from MW-2 on April 8, 1992. The sample along with the accompanying field blank were analyzed for VOC and B/N by GTEL Environmental Laboratories, Inc. The associated trip blank was analyzed for VOC only. Laboratory data for the groundwater samples and associated quality assurance/quality control samples are included in Appendix F.

2.2 Remediation Activities

The remediation activities including the removal of the UST, soil sampling, excavation and disposal of contaminated soil and backfilling were performed by and under the supervision of J&J Environmental. K&D received the soil sampling data for review and interpretation. The UST, associated piping and 30 cubic yards

(approximate) of I.D. 27 soils were removed by J&J Environmental during November and December of 1991. The soils were scheduled for receipt by Gerald Moore & Sons, Inc., Exmore, Virginia, for treatment. Treatment of this material was reported to be through asphalt and/or road bedding recycling. Since this soil was combined with similar I.D. 27 soils from a concurrent remedial action at the nearby Building S-106, copies of the specific and individual non-hazardous material manifests and site entry tickets are not submitted with this report. Copies of the manifests and site entry tickets for the 320.61 tons of I.E. 27 soils removed for both the Quarters G and Building S-106 remedial actions are submitted as Appendix H in the Building S-106 Discharge Investigation and Corrective Action Report. The reader is directed to that report for further information.

Subsurface Soil Sampling

A total of seven (7) subsurface soil and stockpiled soil samples were collected by J&J Environmental on November 18, 1991. A total of four (4) sidewall samples and one (1) invert sample were collected from the 10′ x 10′ x 10′ excavation upon the removal of the UST. In addition one (1) soil sample was collected from two (2) separate stockpiles. All samples were analyzed for TPHC using Method 418.1 by W.A.T.E.R. Works Laboratory Inc., East Orange, New Jersey. W.A.T.E.R. Works Laboratory, Inc. is a certified NJDEP&E laboratory (No. 07673).

3.0 SITE CHARACTERIZATION

3.1 Physical Geography

NWS Earle is located in the Coastal Lowlands of Monmouth County in eastern New Jersey. This area falls within the Atlantic Coastal Plains Physiographic Province, approximately 6 miles inland from the Atlantic Ocean.

The station is divided into three physically separate areas, the largest being the Main Base (10,428 acres), the smaller being the waterfront and Chapel Hill areas (706 acres, combined).

The Main Base lies within the Outer Coastal Plain, a relatively flat area with little topographic relief, except for the Hominy Hills. The Hominy Hills are a northeast-trending set of low hills near the center of the Main Base. Elevations range from approximately 100 to 300 feet above mean sea level (MSL).

3.2 Climate

The Main Base area is characterized by a predominantly continental climate with significant seasonal and daily temperature fluctuations. High humidity occurs frequently along the coast and less frequently inland. Freezing temperatures occur intermittently from October to April. The average first frost occurs on October 17, and the average last frost occurs on April 24, allowing for an average growing season of 198 days. The average annual precipitation is 44.67 inches at Long Branch and 41.82 inches at Newark. The annual peak daily rainfall (1-year, 24-hour) is greater than 2.5 inches. The mean annual temperatures at the Long Branch and Newark meteorological stations are 56.2°F and 45.2°F, respectively.

Winds are highly variable in the area of NWS Earle. The dominant winds are from the northwest during the winter and early spring. Onshore winds predominate during the spring and summer.

3.3 Surface Drainage

All rivers and streams draining NWS Earle, which are just a few miles inland, ultimately discharge to the Atlantic Ocean.

The headwaters and drainage basins of three major Coastal Plain Rivers (i.e., Swimming, Manasquan, and Shark) originate on the main base. The northern half of the Main Base is in the drainage basin of the Swimming River, and tributaries include Main Brook, Hockhockson Brook, and Pine Brook. The southwestern portion of the Main Base drains to the Manasquan River via either Marsh Bog Brook or Mingamahone Brook. The southeastern corner of Main Base drains to the Shark River. Both the Swimming River and the Shark River supply water to reservoirs used for public water supplies.

Quarters G lies within the drainage basin which feeds the Mingamahone Brook which flows south to the Manasquan River. Figure 2 shows the location of Quarters G in relation to surface hydrogeology.

3.4 Soils

The soils at NWS Earle are generally distributed in northeast/southwest-trending belts that parallel the outcrop patterns of the underlying geologic units. More than half of the identified soil types in Monmouth County are found on the NWS Earle facility.

The dominant soil in this area is sandy and well drained. The soils typically have high iron and sulfur contents and many are acidic.

Acidic soils are formed from the weathering of pyrite (iron sulfide) or lignite (low-grade coal) contained in the sedimentary deposits. When exposed to air and water these materials form corrosive sulfuric acid. Severely acids soils with pH values as low as 3.5 can be developed naturally in some of the soils found at NWS Earle.

Poorly drained soils are typically organic-rich and occur in low-lying areas such as swamps, marshes, and flood plains. The soils poorly drained unconsolidated sediments are prone to settlement and subject to flooding and tides.

At the Main Base, the most prevalent soils include the Lakewood, Lakehurst, Leon, and St. Johns Series. The soils range from well drained sandy soils to very poorly drained flood plain soils adjacent to streams and swamps. Highly acidic black soils have been exposed at various depths on the Main Base by construction activities. The black soils are apparently related to lignite-rich clays of the Kirkwood Formation, which crop out across the southern end of the station.

The buildings of Quarters G lie on the well drained sandy soils of the dry upland areas of the base.

3.5 Surficial Geology

The geological setting at NWS Earle consists of a thick wedge of layered unconsolidated sediments that dip seaward (southeast). The sedimentary formations of the Coastal Plain are exposed at the surface in a banded outcrop pattern roughly parallel to the shore.

The Kirkwood Formation of the Miocene age is an important aquifer both regionally and locally. It crops out at the surface over two-thirds of the Main Base (the central and southern portions) as well as across the southern tier of Monmouth County.

In fact, most of the southern part of New Jersey consists of surface exposure of the Kirkwood Formation (grouped with the Cohansey Sand). Texturally, the Kirkwood consists of fine to medium grained quartz sand with some mica, some lignite, and some diatomaceous clay. A lower member is finer-grained, darker, and pebbly and contains some glauconite. The total thickness ranges from approximately 30 feet at the outcrop area on the station to 800 feet near the coast. The texture grades from fine-grained sand and silt inland (updip) to clay beds with finer sands along the coast.

The Kirkwood is used locally for domestic wells and in other areas of the Coastal Plain for municipal supplies. Yields range from 15 to over 1,000 gpm, but the water is generally acidic and contains iron and sulfide.

The overlying Cohansey Sand is a light-colored medium to coarse-grained sand, occasionally pebbly, with local clay beds. In combination with the Kirkwood, it forms a major unconfined aquifer throughout the New Jersey Coastal Plain. It produces brackish or salty water in some coastal areas. The Cohansey Sand crops out at the Main Base, forming topographically prominent Hominy Hills area. No wells are known to tap the Cohansey on the station. Due to its position at the top of the sedimentary sequence, the Cohansey provides recharge of the underlying aquifers, particularly the Kirkwood.

The Hornerstown Sand is the basal Tertiary formation in Monmouth County, and other oldest unit in the Rancocas Group. It is a massive, green, glauconitic sand with interbedded shale. The lithology is homogeneous, and the thickness is fairly constant downdip, with an average thickness of 30 to 50 feet. The Hornerstown crops out along the northwestern boundary of the Main Base.

The Vincentown Formation is a fossiliferous quartz sand, up to 130 feet thick, that contains some coarse-grained glauconite and some clay. An upper member is a lime sand with abundant fossil fragments. The Vincentown Formation is an important source of water for low-yield home wells, with an average range of 10 to 50 gpm. The Vincentown Formation crops out at the surface at the Main Base, covering approximately 25 percent of the station in a bank along the northern border of the facility.

As shown in Figure 3, Quarters G lies directly on the Kirkwood Formation.

3.6 Hydrogeology

3.6.1 Regional Hydrogeology

The Atlantic Coastal Plan sediments are the most important source of potable water in the region. More than 75 percent of the fresh water supply in the New Jersey Coastal Plain is from groundwater.

The Coastal Plain province is composed of a wedge-shaped deposit of alternating layers of sand and clay that thickens to the southeast and overlies a crystalline basement. These deposits store and transmit water through interconnected pore spaces.

Recharge to the groundwater system is derived from precipitation, which averages 44 inches per year. Approximately 15 to 39 inches of this precipitation recharges the groundwater reservoir annually. In addition to precipitation in the outcrop areas, recharge is also provided by vertical leakage through confining beds and by seepage from surface water bodies.

The five principal Coastal Plain aquifers are the:

- Kirkwood-Cohansey aquifer system
- Atlantic City "800-foot sand"
- Wenonah-Mount Laurel aquifer
- Englishtown aquifer
- Potomac-Raritan-Magothy aquifer system

All but the Kirkwood-Cohansey are confined, except where they crop out or are overlain by permeable surficial deposits. NWS Earle is situated over the recharge area of many of these formations.

Water quality is generally satisfactory for drinking. Minor problems due to locally high iron concentrations occur in several aquifers, including the Potomac-Raritan-Magothy. Saline water is a problem in some coastal areas with unconfined aquifers and in deep portions of some confined aquifers.

In general, in the New Jersey Coastal Plain, the deeper aquifers are used for public water supplies, while near-surface aquifers are used for shallow domestic wells.

3.6.2 Local Hydrogeology at NWS Earle

Four sedimentary formations of the Coastal Plain crop out at the Main Base:

- The Hornerstown Sand
- The Vincentown Formation
- The Kirkwood Formation
- The Cohansey Sand

These units and their hydrologic significance are described in detail in Subsection 3.5 and are shown on Figure 3. All these units are recharged by direct precipitation at the surface. Of particular importance are the Vincentown, and Kirkwood Formations because they are used extensively for residential wells in the nearby area. None of the aquifers are used for municipal wells in the area. High iron content is a problem in these aquifers.

The most important groundwater aquifers in the area of NWS Earle occur in the Englishtown, Vincentown, and Kirkwood-Cohansey Formations. Natural groundwater quality in these formations is good and is generally suitable for drinking water purposes. Local high concentrations of nitrate/nitrite occur and are generally associated with higher population densities.

Regional groundwater flow from the Main Base is generally to the east/southeast. Two deep water supply wells located on the Main Base tap the Raritan-Magothy aquifer system at depths of approximately 800 feet below ground. It should be noted, that according to the Navy, the two deep water supply wells are permanently out of service. The outcrop and recharge areas of this aquifer system are located several miles north and west of the Main Base; therefore, water quality in these aquifers would not be affected by activities at NWS Earle.

The surface water flow directions follow the local topography.

4.0 FINDINGS

The following information was determined during the site investigation performed by K&D and review of the analytical data submitted by J&J Environmental.

1) The 550 gallon bare steel UST previously at Quarters G was of undetermined age (possibly greater than 30 years). The tank had stored #2 fuel oil used for heating purposes. The tank failed two precision tests in May of 1990. A site inspection conducted by K&D on October 16, 1990 revealed elevated HNu readings in the adjacent septic system and in the basement sump of Quarters G. The Quarters G building was evacuated of inhabitants and the UST scheduled for removal.

2) The site characterization reported that migration of potential leakage from the UST was a concern since the site lies within the well drained sands of the Kirkwood-Cohansey Aquifer System.

3) The groundwater flow direction at the subject site was determined to be in a east-northeasterly direction. This flow direction was determined based on groundwater elevations from three (3) piezometers installed under the supervision of K&D (See Figure 1). The depth to groundwater measured during this investigation ranged from approximately 8 to 20 feet below grade.

4) A summary of the subsurface soil samples collected during the installation of the three (3) piezometers (PZ-1, PZ-2, PZ-3) and the monitoring well (MW-2) is presented below:

Sample No.	Boring Location	Depth (Ft.)	Parameter	Result (ppm)
PZ-01 G (4'-6')	PZ-01G	4-6	TPHC*	ND
PZ-02 G (4'-6')	PZ-02G	4-6	TPHC*	ND
PZ-02 G (8'-10')	PZ-02G	8-10	TPHC*	ND
PZ-03 G (4'-6')	PZ-03G	4-6	TPHC*	ND
PZ-03 G (14'-16')	PZ-03G	14-16	TPHC*	ND
PZ-03 G (24'-26')	PZ-03G	4-6	TPHC*	ND
MW-02 (4'-6')	MW-2	4-6	TPHC*	ND
MW-02 (8'-10')	MW-2	8-10	TPHC*	ND
MW-02 (14'-16')	MW-2	14-16	TPHC*	ND
MW-02 (18'-20')	MW-2	18-20	TPHC*	ND

ND= Not Detected
* Method 418.1

Overall the results do not indicate the presence of TPHC contamination in the subsurface soils.

5) A summary of the groundwater samples collected from MW-2 is presented below.

Sample No.	Sample Date	Location	D.O.W.	D.T.W.	Temp. °C)	Conductivity (uS/cm)	pH
MW-02	3/3/92	MW-2	20	9'4.5"	--	--	--
MW-02	4/8/92	MW-2	20	8'11.5"	52	569-922	6.47

D.O.W. - Depth of Well
D.T.W. - Depth to Water

Temperature, Conductivity, pH measurements - Hydac meter

VOC: As reported by GTEL Environmental Laboratories Inc., VOC were not detected in the groundwater samples collected from MW-2. Chloroethane was detected in the field blank collected on March 3, 1992 at a concentration of 200 parts per billion (ppb). Its source is unknown since it was not detected in any groundwater sample collected or in the trip blank.

B/N: B/N were not detected in the groundwater samples collected from MW-2.

Overall, the results do not indicate contaminant migration into the groundwater.

6) The results of the soil samples collected by J&J Environmental during the removal of the UST are listed below.

Sample No.	Sample Date	Sample Location	Parameter	Result (ppm)
1	11/18/91	Sidewall	TPHC*	ND
2	11/18/91	Sidewall	TPHC*	38
3	11/18/91	Sidewall	TPHC*	ND
4	11/18/91	Sidewall	TPHC*	25
5	11/18/91	Invert	TPHC*	ND
6	11/18/91	Soil Stockpile #1**	TPHC*	435
7	11/18/91	Soil Stockpile #2**	TPHC*	564

* Method 418.1
**The two (2) soil stockpiles consisted of approximately fifteen (15) cubic yards each.

A review of the data indicated that the remediation activities of the UST were complete. The results were below the NJDEP&E soil cleanup level of 1000 ppm.

5.0 CONCLUSIONS AND RECOMMENDATIONS

The investigation performed by K&D indicated that some leakage of the on-site tank system had occurred. The UST, associated appurtenances and approximately 30 cubic yards of soil were removed by J&J Environmental for off-site disposal. Staining of soil was limited to the soil immediately contacting the tank invert based on visual observations and field screening during the tank removal.

The results of the groundwater and subsurface soil samples indicated that the upper water bearing zone below the tank has not been impacted by what appeared to be limited release from the tank system. No evidence was found which would indicate the existing conditions associated with the Quarters G UST removal pose a threat to the environment or public within the immediate area. No further investigating or remedial activities are proposed for the site.

Table 1
SAMPLE RESULTS

SOIL SAMPLES COLLECTED BY J&J ENVIRONMENTAL

SAMPLE NO.	SAMPLE DATE	SAMPLE LOCATION	PARAMETER	RESULT (ppm)
1	11/18/91	SIDEWALL	TPHC *	ND
2	11/18/91	SIDEWALL	TPHC *	38
3	11/18/91	SIDEWALL	TPHC *	ND
4	11/18/91	SIDEWALL	TPHC *	25
5	11/18/91	INVERT	TPHC *	ND
6	11/18/91	SOIL STOCKPILE #1	TPHC *	435
7	11/18/91	SOIL STOCKPILE #2	TPHC *	564

SOIL SAMPLES COLLECTED BY K&D DURING PIEZOMETER AND MONITORING WELL INSTALLATION

SAMPLE NO.	BORING LOCATION	DEPTH (ft.)	PARAMETER	RESULT (ppm)
PZ–01 G (4'–6')	PZ–01G	4–6	TPHC *	ND
PZ–02 G (4'–6')	PZ–02G	4–6	TPHC *	ND
PZ–02 G (8'–10')	PZ–02G	8–10	TPHC *	ND
PZ–03 G (4'–6')	PZ–03G	4–6	TPHC *	ND
PZ–03 G (14'–16')	PZ–03G	14–16	TPHC *	ND
PZ–03 G (24'–26')	PZ–03G	4–6	TPHC *	ND
MW–02 (2'–4')	MW–2	4–6	TPHC *	ND
MW–02 (8'–10')	MW–2	8–10	TPHC *	ND
MW–02 (14'–16')	MW–2	14–16	TPHC *	ND
MW–02 (18'–20')	MW–2	18–20	TPHC *	ND

* METHOD 418.1

GROUNDWATER SAMPLES COLLECTED BY K&D

SAMPLE NO.	SAMPLE DATE	VOC (ppb)	B/N (ppb)
MW–02	3/3/92	ND	ND
TRIP BLANK	3/3/92	ND	ND
FIELD BLANK	3/3/92	200 (CHLOROETHANE)	ND
MW–02	4/8/92	ND	ND
TRIP BLANK	4/8/92	ND	—
FIELD BLANK	4/8/92	ND	ND

ND = NOT DETECTED

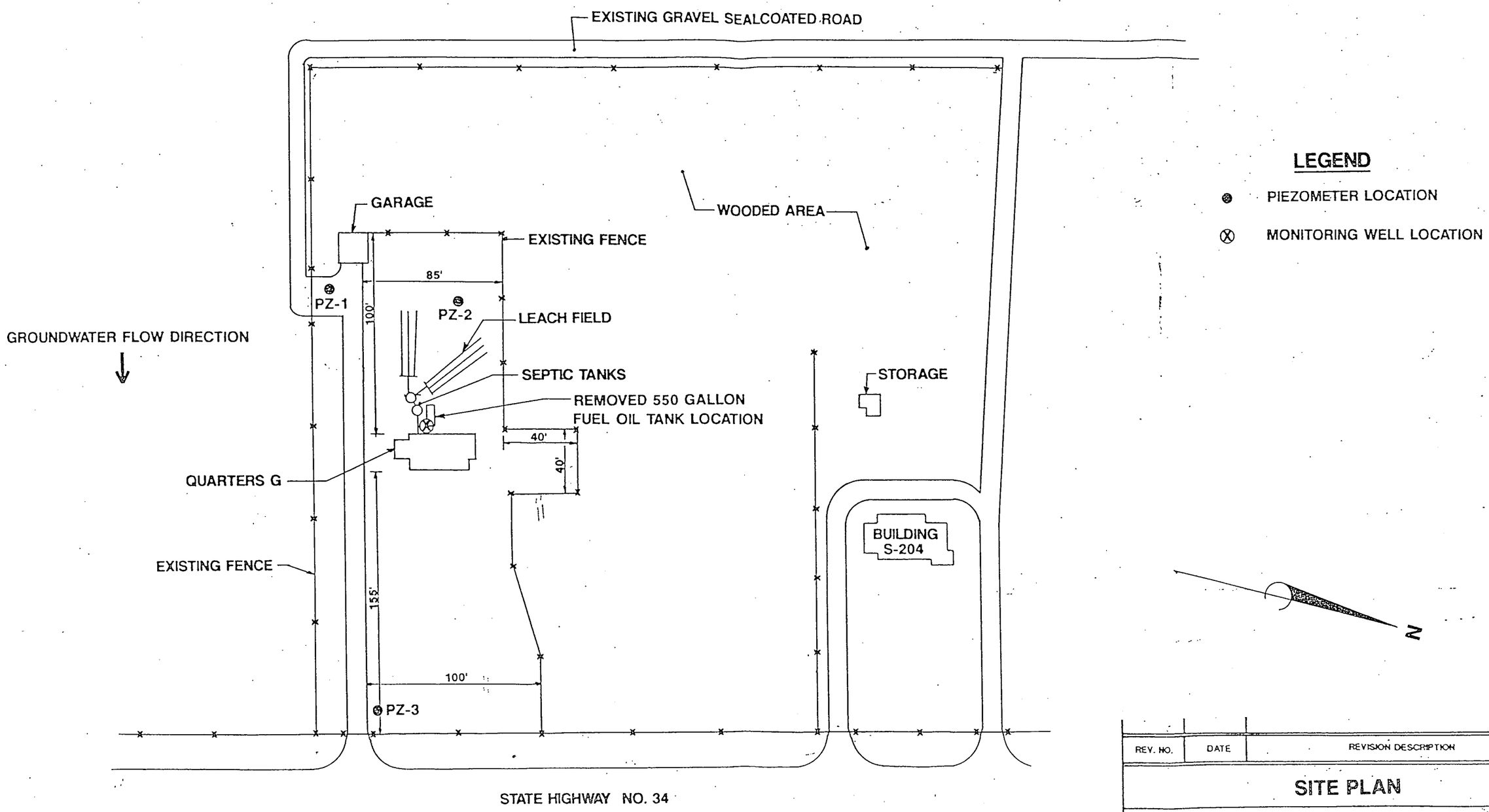

REV. NO.	DATE	REVISION DESCRIPTION

SITE PLAN

U.S. NAVAL WEAPONS STATION
QUARTERS G
EARLE, NEW JERSEY

Drawn By: M.S.	Kaselaan & D'Angelo Associates, Inc.	Scale: N.T.S.
Approved By:	Engineering & Land Surveying Environmental Consultants	Sheet: Figure 1
Date:	515 Grove Street, Haddon Heights, N.J. 08035 (609) 547-6500	Drawing No.: 1623-024

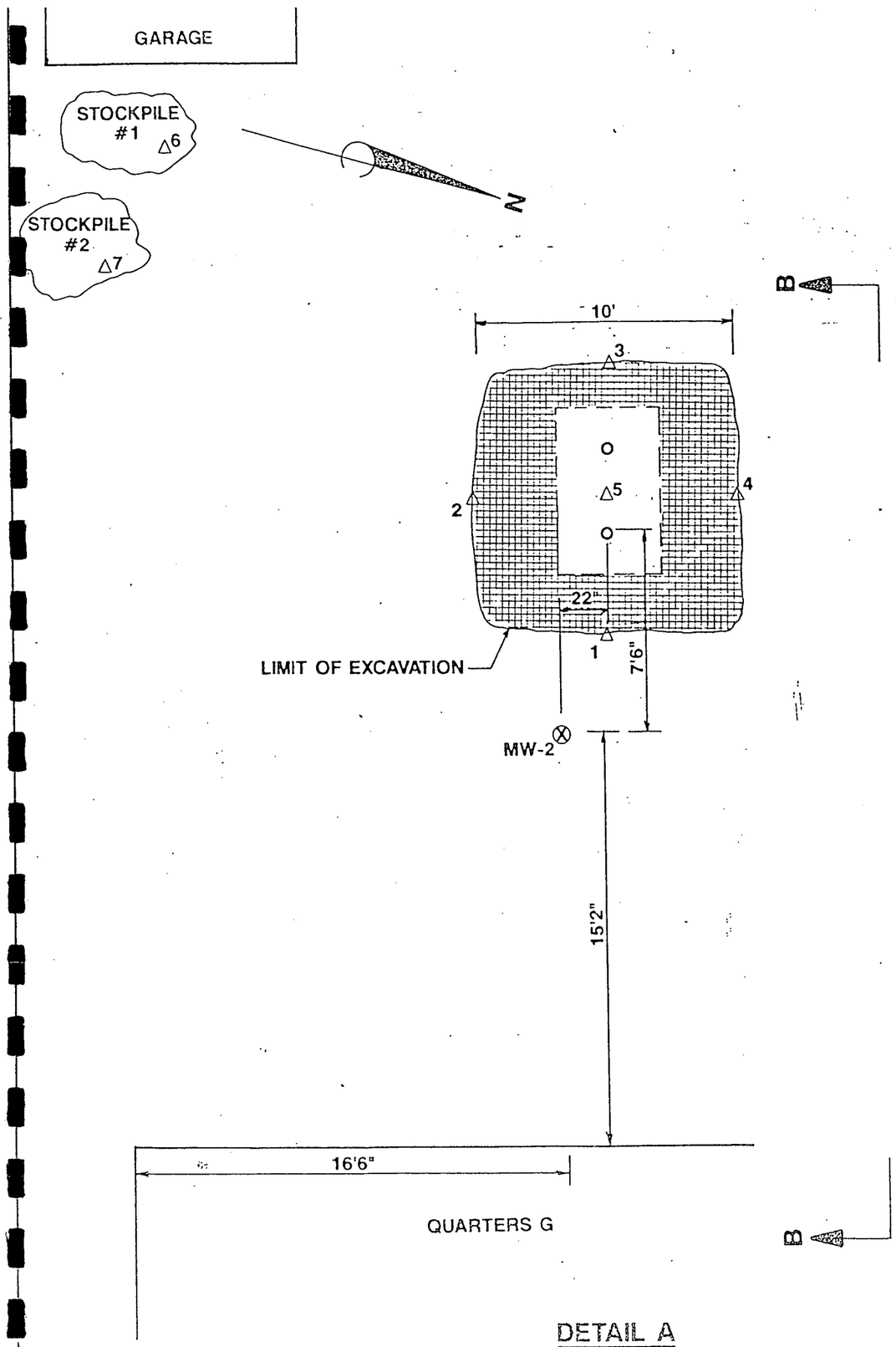

DETAIL A

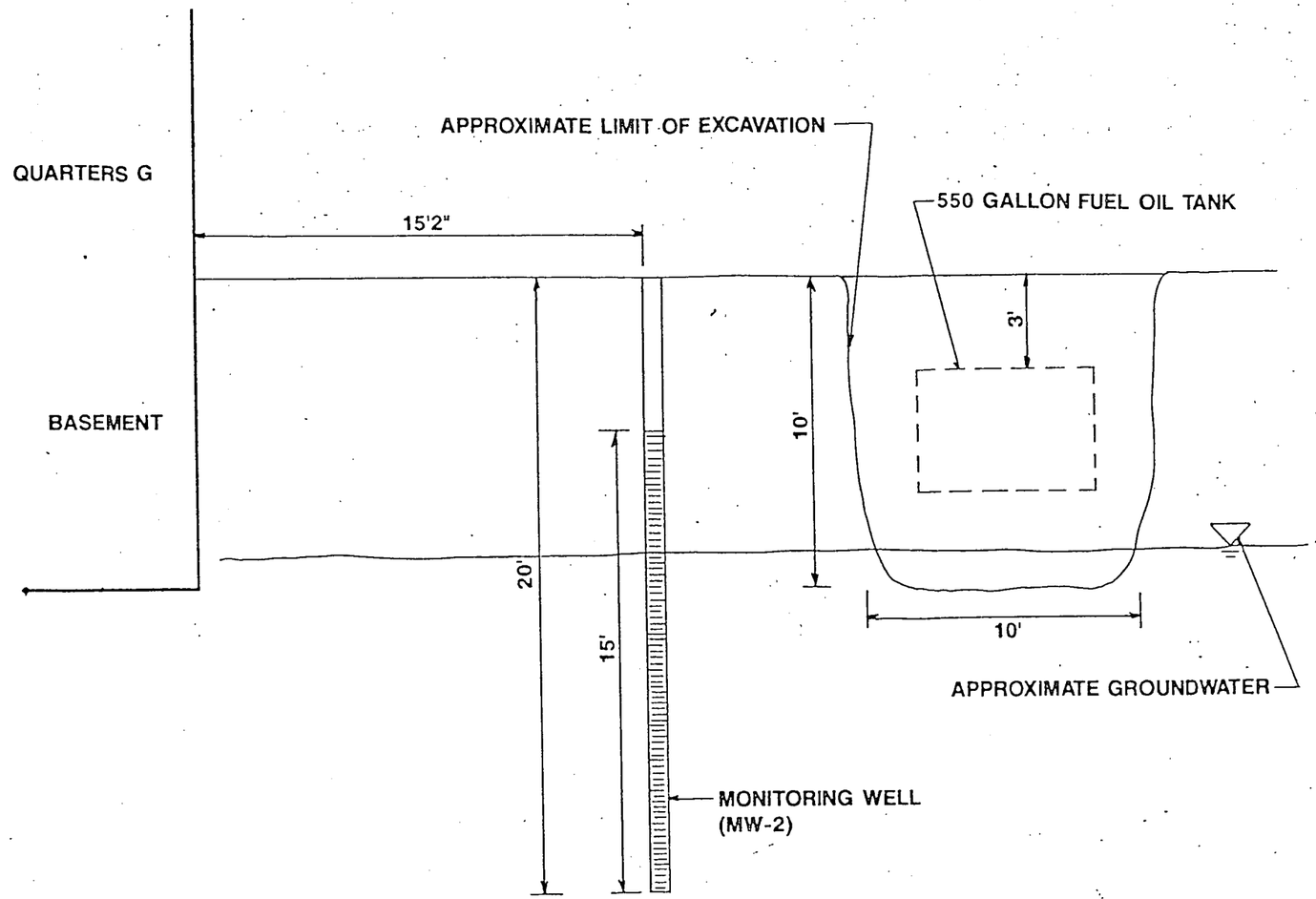

SECTION B-B

KEY

⊗ MONITORING WELL LOCATION

△ SUBSURFACE SOIL SAMPLE

REV. NO.	DATE	REVISION DESCRIPTION

SITE PLAN DETAILS

U.S. NAVAL WEAPONS STATION
QUARTERS G
EARLE, NEW JERSEY

Drawn By: M.S.	Kaselaan & D'Angelo Associates, Inc.	Scale: 1"=5'-0"
Approved By:	Engineering & Land Surveying Environmental Consultants	Sheet: Figure 2
Date:	515 Grove Street, Haddon Heights, N.J. 08035 (609) 547-6500	Drawing No.: 1629-024

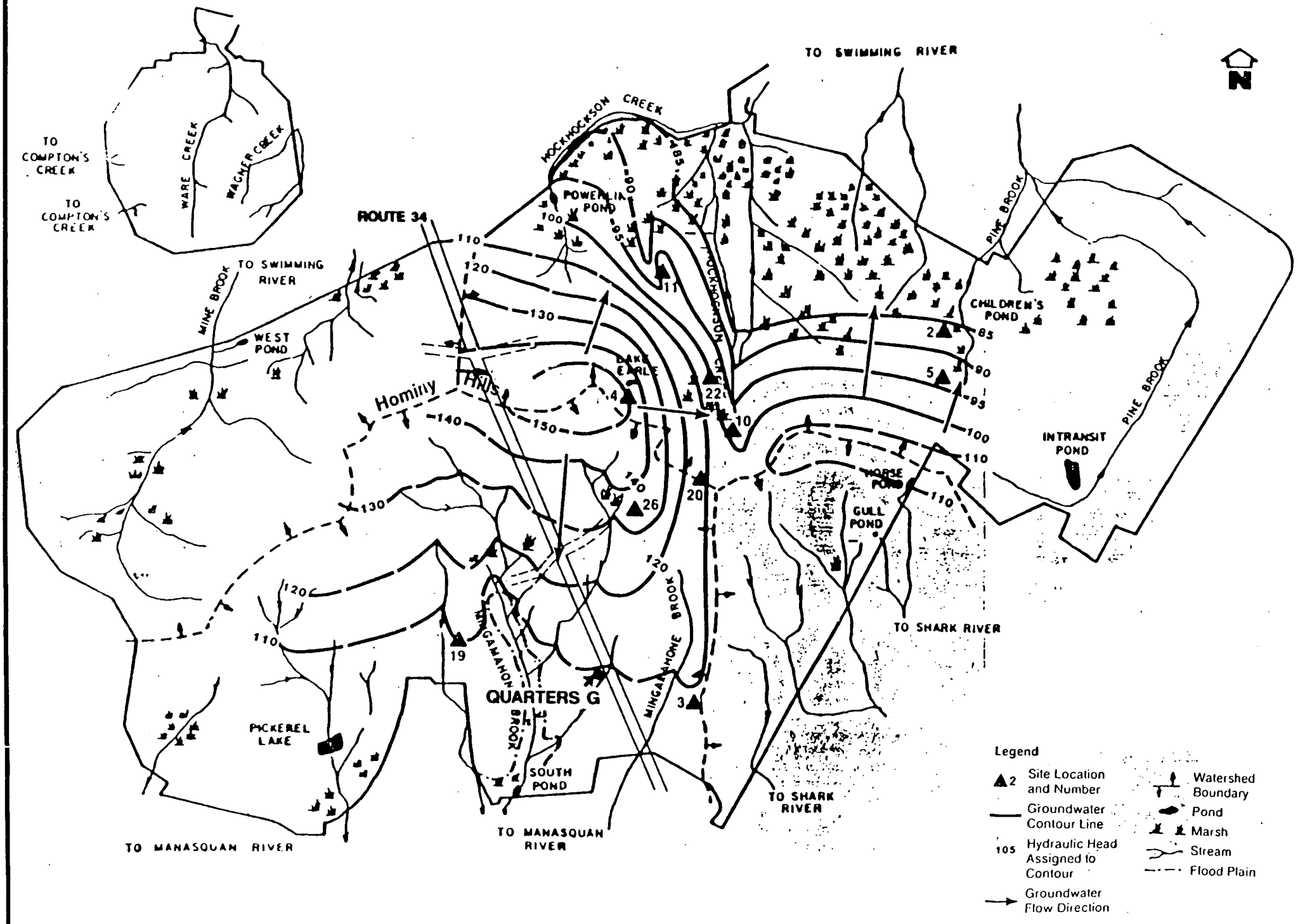
TO COMPTON'S CREEK
TO COMPTON'S CREEK
WARE CREEK
WAGNER CREEK
TO SWIMMING RIVER
MOCKHOCKSON CREEK
POWERLIN POND
ROUTE 34
TO SWIMMING RIVER
MINE BROOK
WEST POND
Homily Hills
LAKE EARLE
MOCKHOCKSON CR
PINE BROOK
CHILDREN'S POND
INTRANSIT POND
PINE BROOK
WORSE POND
GULL POND
TO SHARK RIVER
MINGAMAHONE BROOK
QUARTERS G
PICKEREL LAKE
SOUTH POND
TO SHARK RIVER
TO MANASQUAN RIVER
TO MANASQUAN RIVER
N
Legend
Site Location and Number
Groundwater Contour Line
Hydraulic Head Assigned to Contour
Groundwater Flow Direction
Watershed Boundary
Pond
Marsh
Stream
Flood Plain

Figure 3

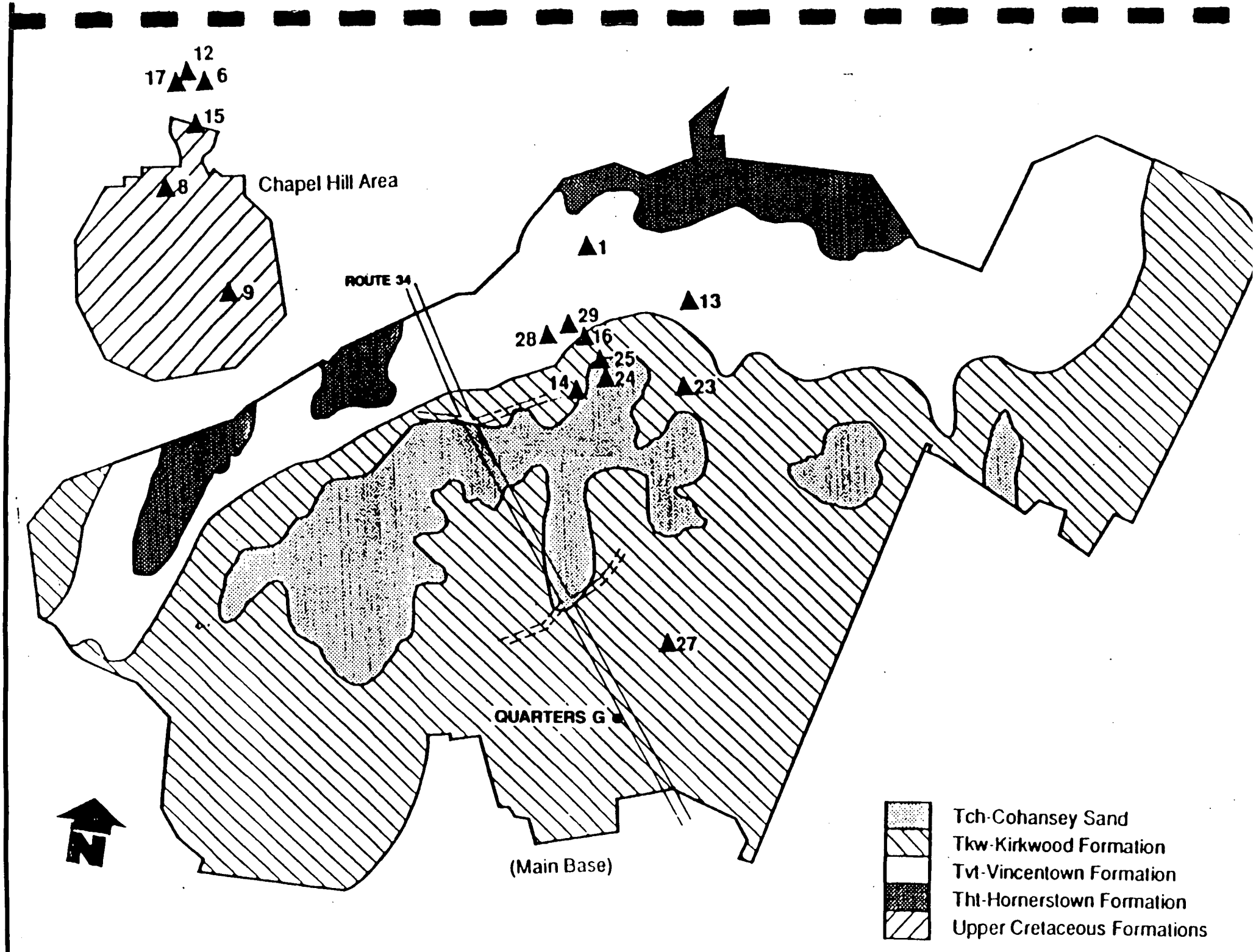
12
17
6
15
8
Chapel Hill Area
9
ROUTE 34
1
13
29
28
16
25
14
24
23
27
QUARTERS G
(Main Base)
N
Tch-Cohansey Sand
Tkw-Kirkwood Formation
Tvt-Vincentown Formation
Tht-Hornerstown Formation
Upper Cretaceous Formations

Figure 4

APPENDICES

APPENDIX A

Piezometer and Monitoring Well Installation Specifications and Permits

UNCONSOLIDATED TEMPORARY PIEZOMETER INSTALLATION SPECIFICATIONS

N.T.S.

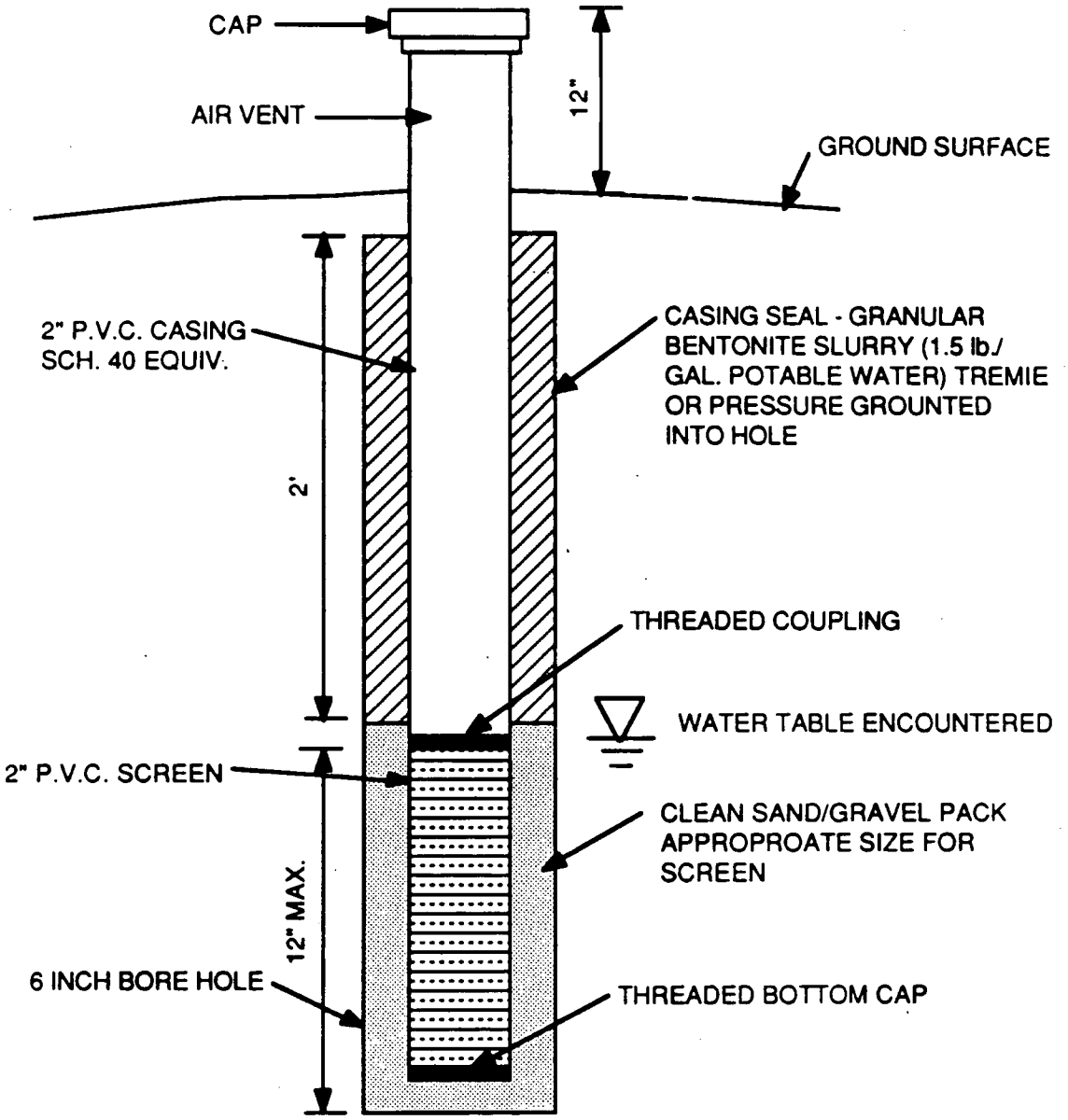

UNCONSOLIDATED FLUSH MOUNT MONITOR WELL SPECIFICATIONS

N.T.S.

SITE NAME: EARLE WEAPONS STATION

MONITORING WELL NO.: MW-02

LOCATION: QUARTERS G

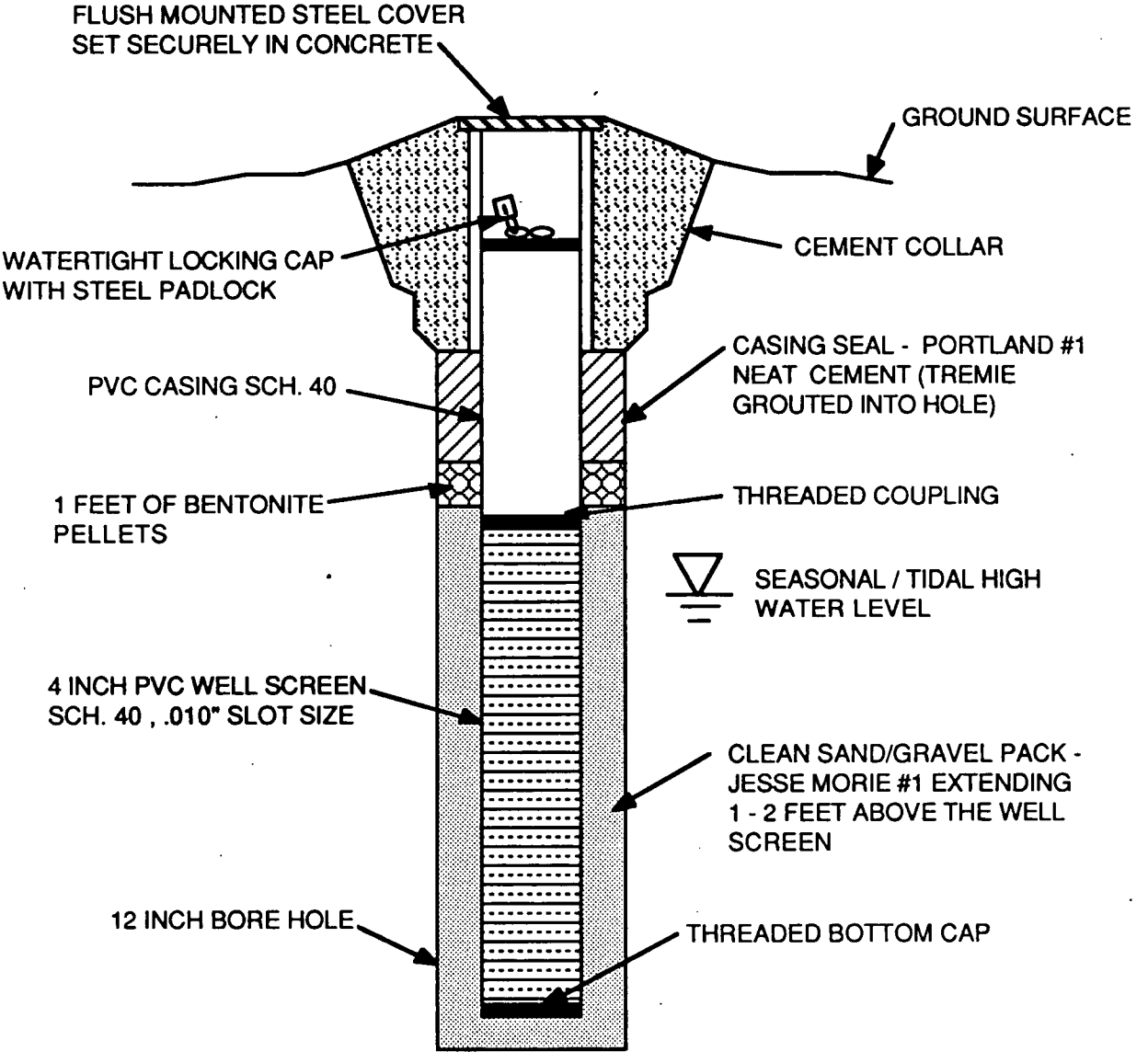

DWR-133M (4/90) SERIAL # 22969

52

STATE OF NEW JERSEY
DEPARTMENT OF ENVIRONMENTAL PROTECTION
DIVISION OF WATER RESOURCES
TRENTON, N.J.

Permit No. 29 20076 29 20077 29 20078

Mail to
Water Allocation
CN 029
Trenton, N.J. 08625

MONITORING WELL PERMIT

VALID ONLY AFTER APPROVAL BY THE D.E.P.

COORD # 29 .20.3 81

Owner Earle Naval Amm. Depot
Address Highway 34
Earle NJ. 07722

Driller Uni-tech Drilling
Address PO Box 467
Clayton, NJ. 08312

Name of Facility SAME
Address

Diameter of Well(s)	2 Inches	Proposed Depth of Well(s)	20 Feet
# of Wells Applied for (max. 10)	3	Will pumping equipment be installed? YES ☐ NO ☒	
Type of Well (see reverse)	Piezometers	If Yes, give pump capacity	GPM

LOCATION OF WELL(S)

Lot #	Block #	Municipality	County
N/A	N/A	Earle	Monmouth

State Atlas Map No. 29

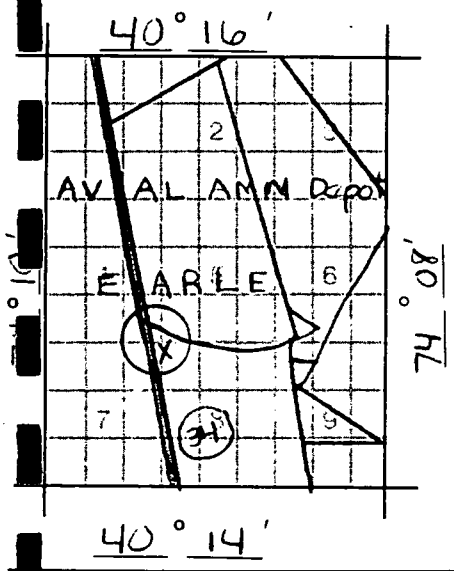

Draw sketch of well(s) nearest roads, buildings, etc. with marked distances in feet. Each well MUST be labeled with a name and/or number on the sketch.

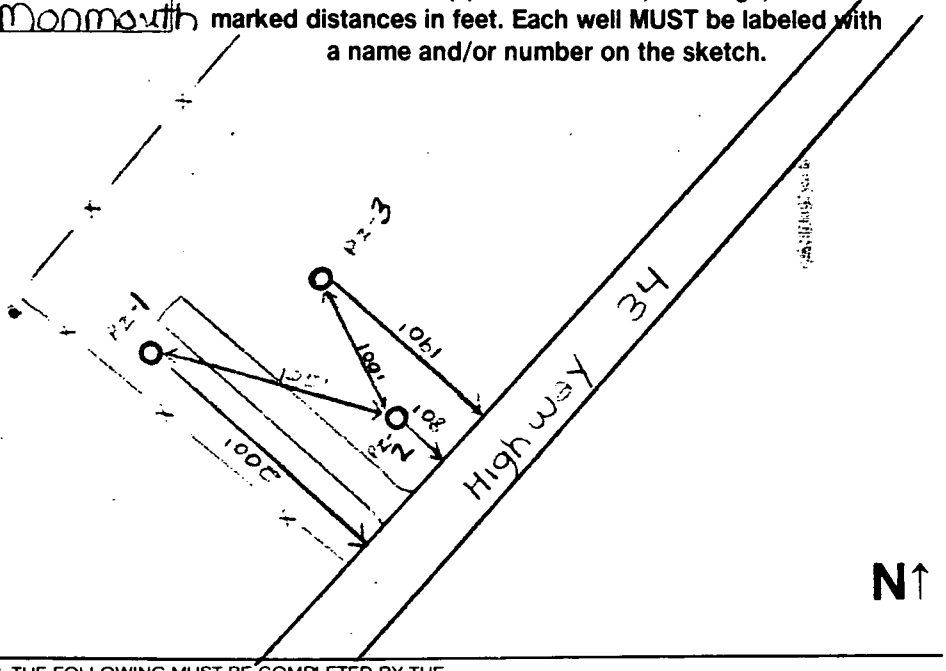

FOR MONITORING WELLS, RECOVERY WELLS, OR PIEZOMETERS, THE FOLLOWING MUST BE COMPLETED BY THE APPLICANT. PLEASE INDICATE WHY THE WELLS ARE BEING INSTALLED:

- ☐ Spill Fund Case
- ☐ ECRA Case
- ☐ CERCLA (Superfund) Site
- ☐ RCRA Site
- ☒ Underground Storage Tank
- ☐ NJPDES Municipal Discharge Permit
- ☐ NJPDES Industrial Discharge Permit
- ☐ Div. Hazardous Waste Mgmt. Enforcement Case
- ☐ Div. Water Resources Enforcement Case
- ☐ Water Supply Aquifer Test Observation Well
- Other (explain)

Case I.D. Number: unknown

This Space for Approval Stamp

WELL PERMIT APPROVED
Dept. of Environmental Protection
Water Resources/Water Allocation
OCT 24 1991

FOR D.E.P. USE
☐ Issuance of this permit is subject to the conditions attached. (see next page)
☐ For monitoring purposes only
☒ The well(s) may not be completed with more than 25 feet of total screen or uncased borehole.
☐

SEE REVERSE SIDE FOR IMPORTANT PROVISIONS AND REGULATIONS PERTAINING TO THIS PERMIT.

In compliance with N.J.S.A. 58:4A-14, application is made for a permit to drill a well as described above.

Date 10-24-91

Signature of Driller [illegible] License # 804

Signature of Owner [illegible] John Paulis

COPIES: Water Allocation — White and Pink Health Dept. — Yellow Owner — Blue Driller — White

DWR-133M (4/90) SERIAL # 18830

292743
292743

Mail to
Water Allocation
CN 029
Trenton, N.J. 08625

STATE OF NEW JERSEY
DEPARTMENT OF ENVIRONMENTAL PROTECTION
DIVISION OF WATER RESOURCES
TRENTON, N.J.

09 Permit N. 292743

MONITORING WELL PERMIT

VALID ONLY AFTER APPROVAL BY THE D.E.P.

COORD # 29223 53

Owner: U.S. Naval Weapons Station
Address: US. Rt. 34
Coltsneck, NJ. 07722
Name of Facility: Same as Above
Address:

Driller: J. E. Fritts & Assoc., Inc.
Address: P. O. Box 333
Voorhees, NJ. 08043

Diameter of Well(s)	4 inches	Proposed Depth of Well(s)	30 Feet
# of Wells Applied for (max. 10)	2	Will pumping equipment be installed?	YES ☐ NO ☒
Type of Well (see reverse)	Monitor	If Yes, give pump capacity	GPM

LOCATION OF WELL(S)

Lot #	Block #	Municipality	County
n/a	n/a	Coltsneck	Monmouth

State Atlas Map No. 29

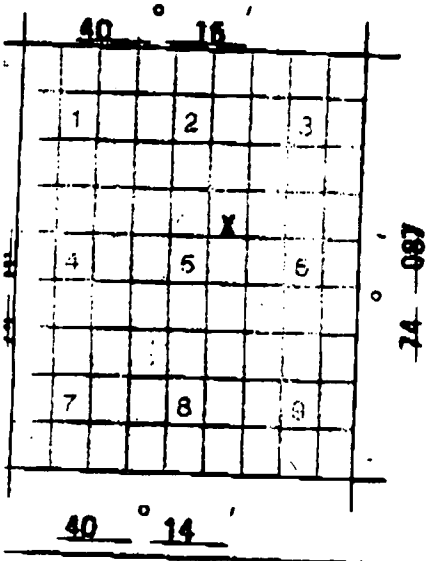

Draw sketch of well(s) nearest roads, buildings, etc. with marked distances in feet. Each well MUST be labeled with a name and/or number on the sketch.

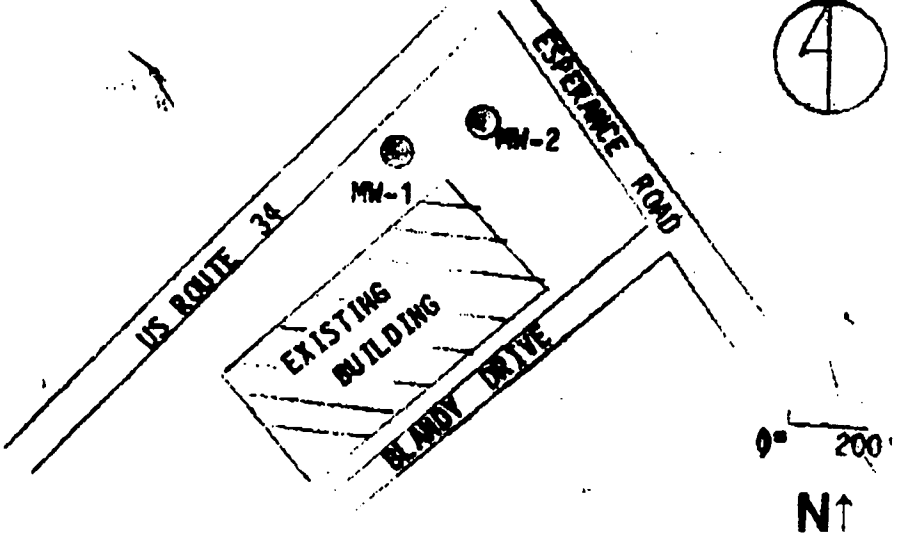

4

OR MONITORING WELLS, RECOVERY WELLS, OR PIEZOMETERS, THE FOLLOWING MUST BE COMPLETED BY THE PPLICANT. PLEASE INDICATE WHY THE WELLS ARE BEING INSTALLED:

- Spill Fund Case
- ECRA Case
- CERCLA (Superfund) Site
- RCRA Site
- Underground Storage Tank
- NJPDES Municipal Discharge Permit
- NJPDES Industrial Discharge Permit
- Div. Hazardous Waste Mgmt. Enforcement Case
- Div. Water Resources Enforcement Case
- Water Supply Aquifer Test Observation Well
- Other (explain)

Case I.D. Number

This Space for Approval Stamp

WELL PERMIT APPROVED
Dept. of Environmental Protection
Water Resources/Water Allocation
JAN 21 1992

FOR D.E.P. USE
☐ Issuance of this permit is subject to the conditions attached. (see next page)
☐ For monitoring purposes only
☐ The Well(s) may not be completed with more than 25 feet of total screen or uncased borehole.

E REVERSE SIDE FOR IMPORTANT PROVISIONS AND REGULATIONS PERTAINING TO THIS PERMIT.
mpliance with N.J.S.A. 58:4A-14, application is made for a permit to drill a well as described above.

January 20, 1992

Signature of Driller: License # 410
Signature of Owner:

COPIES: Water Allocation — White and Pink
Health Dept. — Yellow

New Jersey Department of Environmental Protection and Energy
Bureau of Water Allocation

MONITORING WELL RECORD

Well Permit No. 29 - 27437
Atlas Sheet Coordinates 29 : 22 : 353

OWNER IDENTIFICATION - Owner U.S. NAVAL WEAPONS STATIO
Address U.S. RT. 34
City COLTS NECK State NJ Zip Code 07722

WELL LOCATION - If not the same as owner please give address. Owner's Well No. MW-2
County Monmouth Municipality COLTS NECK TWP Lot No. N/A Block No. N/A
Address Same as Above.

TYPE OF WELL (as per Well Permit Categories) Date well completed 1/23/92
Regulatory Program Requiring Well MONITORING UST Case I.D. #
CONSULTING FIRM/FIELD SUPERVISOR (If applicable) Tele. #

WELL CONSTRUCTION

Total depth drilled 20' 6" ft.
Well finished to 20 ft.
Borehole diameter:
Top 12 in.
Bottom 12 in.
Well was finished: ☐ above grade ☒ flush mounted
If finished above grade, casing height (stick up) above land surface — ft.
Was steel protective casing installed? ☐ Yes ☒ No

	Depth to Top (ft.) [From land surface]	Depth to Bottom (ft.) [From land surface]	Diameter (inches)	Type and Material
Inner Casing	0	5'	4	PVC
Outer Casing (Not Protective Casing)	—	—	—	—
Screen (Note slot size)	5'	20'	4	PVC (.010)
Tail Piece	—	—	—	—
Gravel Pack	3'	20' 6"	—	#2 Sand
Annular Seal/Grout	0	3'	—	Cement/Bent.
Method of Grouting	Mixed by hand			

Static water level after drilling 9 ft.
Water level was measured using Tape
Well was developed for 1 hours at 1/2 gpm
Method of development Pumped
Was permanent pumping equipment installed? ☐ Yes ☒ No
Pump capacity — gpm
Pump type: —
Drilling Method HSA
Drilling Fluid — Type of Rig B-80
Name of Driller
Health and Safety Plan submitted? ☐ Yes ☒ No
Level of Protection used on site (circle one) None D C B A
N.J. License No. 1226
Name of Drilling Company J. E. FRITTS

GEOLOGIC LOG (Copies of other geologic logs and/or geophysical logs should be attached.)

0 - 6" Topsoil
6" - 10' F. Br. Sand
10' - 15' F-M Br. Sand
15' - 20' 6" Lt. Gray Clay

I certify that I have drilled the above-referenced well in accordance with all well permit requirements and all applicable State rules and regulations.

Driller's Signature Bruce O. Higgins Date Jan. 28, 1992

COPIES: White & Green - DEPE Canary - Driller Pink - Owner Goldenrod - Health Dept.

APPENDIX B

Piezometer and Monitoring Well Survey Information

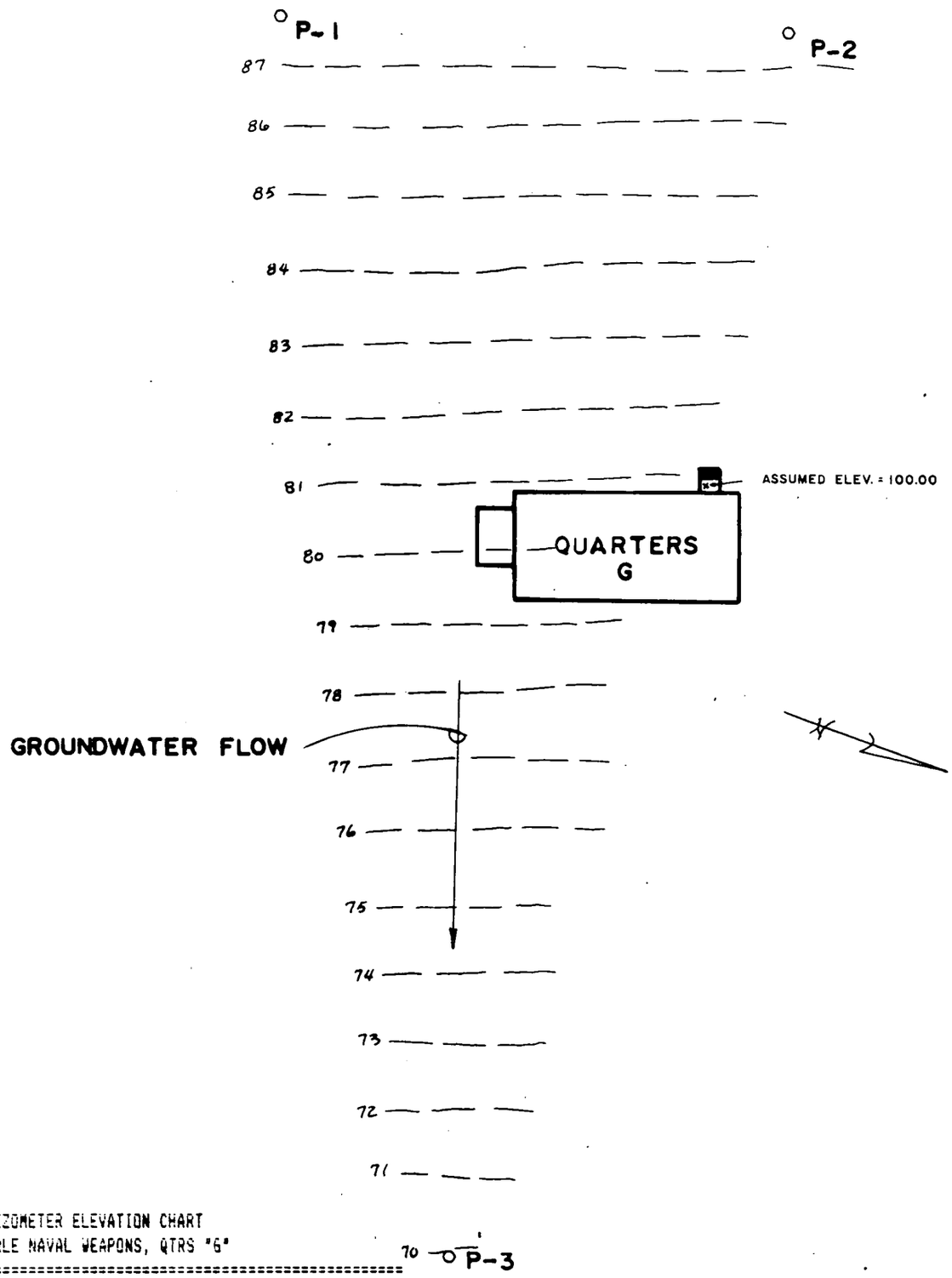

PIEZOMETER ELEVATION CHART
EARLE NAVAL WEAPONS, QTRS "G"

DESC.	TOP OF PIAZOMETER	GROUND WATER ELEV
P-1	99.21	87.61
P-2	99.68	87.57
P-3	90.15	69.96

ASSUMED ELEVATION = 100.00'

TO ANY INSUROR OF TITLE RELYING HEREON AND ANY OTHER PARTY IN INTEREST "IN CONSIDEPATION OF THE FEE PAID FOR MAKING THIS SURVEY, I HEREBY CERTIFY TO ITS ACCURACY (EXCEPT SUCH EASEMENTS, IF ANY, THAT MAY BE LOCATED BELOW THE SURFACE OF THE LANDS AND NOT VISIBLE) AS AN INDUCEMENT FOR ANY INSUROR OF TITLE TO INSURE THE TITLE TO THE LANDS AND PREMISES SHOWN THEREON THIS RESPONSIBILITY LIMITED TO THE CURRENT MATTER AS OF THE DATE OF THIS SURVEY."

WAYNE W. BURGETT

N.J. LICENSE NO. GS 31654

PLAN OF SURVEY

EARLE, N.W.S.

DATE: 12/18/91	DRAWN BY: WB	JOB NO:
SCALE: 1"=30'	CHECKED BY: WB	

WAYNE W. BURGETT PLS, PP
LAND SURVEYING, PLANNING, CONSULTING
246 S. WHITE HORSE PIKE
AUDUBON, NEW JERSEY 08106
(609) 547-7345

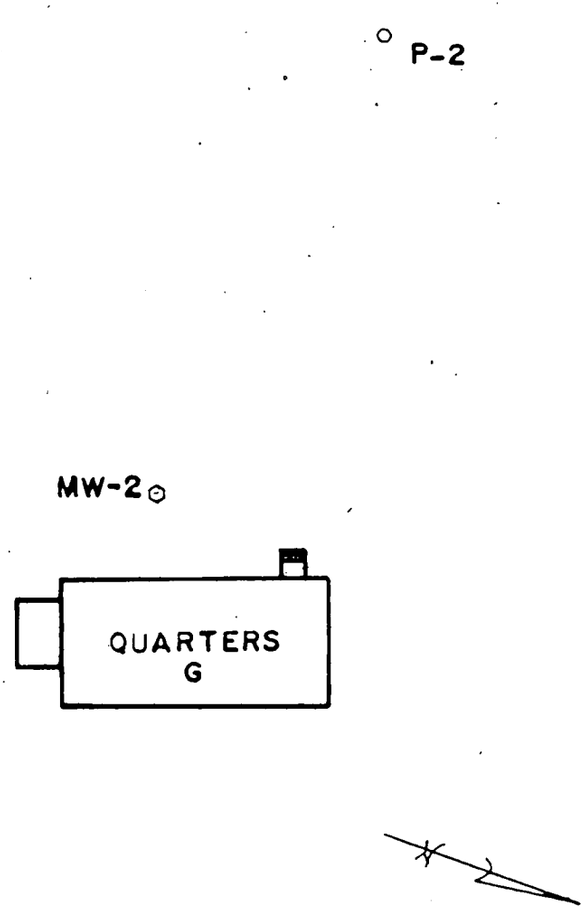

PIEZOMETER AND WELL ELEVATION CHART
PIEZOMETER AND WELL ELEVATION CHART
EARLE NAVAL WEAPONS, QTRS "G"

DESC.	TOP OF CASING	GROUND WATER ELEV
P-1	123.25	112.18
P-2	123.72	112.45
P-3	114.19	94.07
MW-2	121.84	112.19

TO ANY INSUROR OF TITLE RELYING HEREON AND ANY OTHER PARTY IN INTEREST "IN CONSIDEPATION OF THE FEE PAID FOR MAKING THIS SURVEY, I HEREBY CERTIFY TO ITS ACCURACY (EXCEPT SUCH EASEMENTS, IF ANY, THAT MAY BE LOCATED BELOW THE SURFACE OF THE LANDS AND NOT VISIBLE) AS AN INDUCEMENT FOR ANY INSUROR OF TITLE TO INSURE THE TITLE TO THE LANDS AND PREMISES SHOWN THEREON THIS RESPONSIBILITY LIMITED TO THE CURRENT MATTER AS OF THE DATE OF THIS SURVEY."

WAYNE W. BURGETT

N.J. LICENSE NO. GS 31654

PLAN OF SURVEY

EARLE, N.W.S.

DATE: 2/25/92	DRAWN BY: WB	JOB NO:
SCALE: 1" = 30'	CHECKED BY: WB	

WAYNE W. BURGETT PLS, PP
LAND SURVEYING, PLANNING, CONSULTING
246 S. WHITE HORSE PIKE
AUDUBON, NEW JERSEY 08106
(609) 547-7345

THIS FORM MUST BE COMPLETED BY THE PERMITTEE OR HIS/HER AGENT

GROUNDWATER MONITORING WELL CERTIFICATION - FORM B - LOCATION CERTIFICATION

Name of Permittee: DEPARTMENT OF THE NAVY

Name of Facility: NAVAL WEAPONS STATION - EARLE

Location: QUARTERS "G"

NJPDES Permit No. _____

LAND SURVEYOR'S CERTIFICATION

Well Permit Number (As assigned by NJDEP's Water Allocation Section (609) 984-6831): This number must be permanently affixed to the well casing.

29 - 27437

Longitude (one-tenth of a second): 74° 09' 03.61"

Latitude (one-tenth of a second): 40° 14' 08.53"

Elevation of Top of Casing (cap off) (one-hundredth of a foot): 121.84'

Owners Well Number: MW-2

AUTHENTICATION:

I certify under penalty of law that I have personally examined and am familiar with the informaiton submitted in this document and all attachments and that, based on my inquiry of those individuals immediately responsible for obtaining the information, I believe the submtted information is true, accurate and complete. I am aware that there are significant penalties for submitting false information including the possibility of fine and imprisonment.

Wayne W. Burgett

PROFESSIONAL LAND SURVEYOR'S SIGNATURE

WAYNE W. BURGETT

PROFESSIONAL LAND SURVEYOR'S NAME (Type or Print)

31654

PROFESSIONAL LAND SURVEYOR'S LICENSE #

SEAL

The Department reserves the right in case of violation of permit specified groundwater limits or Ground Water Quality Standards (N. J. A. C. 7: 9-6. 1 et. seq.) to require that wells be resurveyed to an accuracy of one-hundredth of a second latitude and longitude. This shall not be considered to require a major modification of the NJPDES permit.

APPENDIX C

Boring Logs

12/89

J.E. Fritts & Associates

Quarters B

NO. _____ PROJECT: Eaile MW-02 DATE, START Jan 22 1992

ELEV. _____ DATE, FINISH Jan 23 1992

DEPTH FROM	DEPTH TO	VISUAL CLASSIFICATION	SAMPLE NO.	SAMPLE DEPTHS	BLOWS ON SAMPLE SPOON 1ST 6"	2ND 6"	3RD 6"	4TH 6"	REC.
	6	Topsoil			1	1	2	2	
6	10	A few sand lenses (saturated)			3	4	5	7	
10	15	Moist medium sand			6	9	9	8	
15	20.6	Dark Gray Clay & fine sand			6	9	9	8	
		" " " & sand			8	8	10	14	
					6	7	8	5	
		hit water 9'			6	9	8	5	
					10	3	3	7	
		Installed 15' 1" slot screen with			6	9	11	13	
		5 riser			9	11	13	20	
		9 sand							
		1 cement							
		1 pellets							
		3 drums							
		1 manhole							
		1 locking cap and lock							

WATER LEVELS INDICATED ARE OBSERVED DURING DRILLING, OR AS NOTED. POROSITY OF SOIL STRATA, VARIATIONS OF RAINFALL, SITE TOPOGRAPHY. ETC., MAY CAUSE CHANGES IN THESE WATER LEVELS.

SAMPLE SPOON BLOWS ARE THOSE REQUIRED TO DRIVE A 2" O.D. SPOON 6 INCHES USING A 140 LB. WEIGHT FREE FALLING 30 INCHES.

JOB NO. _____

FOREMAN Joe B

BORINGS _____

Rasteiaan & D'Angelo Associates, Inc.

BORING LOG

PROJECT: NAVFAC EARLE
Location: QUARTERS G
Contractor: UNI-TECH DRILLING
Field Scientist/Engineer: J. EDWARDS
Notes:

PROJECT NO.: E1-1629-024
Coordinates: —
Date: 10/25/92
Water Table Depth: ≈10'
Organic Vapor Instrument Used: OVM

BORING NO.: PZ-01G
Drilling Method Used: Split Spoon 2"
Hammer Weight: 140 LB

Depth (feet)	Sample Interval	Blows per 6 inches	Adv. / Recov.	Org. vap. (ppm)	Sample Description	Strata Change	Comments	Sample No.
		0	23"	0	ASPHALT / STONE	6"		
		3			LIGHT F-M SAND W/SILTY CLAY, STONE	2"		
		4			LIGHT BROWN F-C SAND W/STONE	5"		
		2			GRAY F-C SAND W/STONE	7"		
					LIGHT BROWN F-SAND W/SILT, STONE	3"		
		3	20"	0	LIGHT BROWN SILTY F-SAND, STONE	16"		
		4						
		4			TAN, LIGHT BROWN SILTY F-M SAND	4"		
		6						
		3	19"	43	LIGHT BROWN, YELLOW F-M SAND W/STONE	14"		
		4						
		7			RUST, BROWN, TAN SILTY F-M SAND	5"	SAMPLE FOR TPHC	
		6						
		5	24"	0	LIGHT BROWN, TAN SILTY F-M SAND	24"		
		6						
		6						
		6						
		5	19"	9	LIGHT BROWN, TAN SILTY F-M SAND	19"		
		3						
		2						
		5					WET	

Rasteiaan & D'Angelo, 1991

Rasteadn & D'Angelo Associates, Inc.

BORING LOG

PROJECT: NAVFAC EARLE
Location: QUARTERS G
Contractor: UNI-TECH DRILLING
Field Scientist/Engineer: J. EDWARDS
Notes:

PROJECT NO.: E1-1629-024
Coordinates: —
Date: 10/25/92
Water Table Depth: ≈10'
Organic Vapor Instrument Used: OVM

BORING NO.: PZ-02 G
Drilling Method Used: Split Spoon 2"
Hammer Weight: 140 LB

Depth (feet)	Sample Interval	Blows per 6 inches	Adv. / Recov.	Org. vap. (ppm)	Sample Description	Strata Change	Comments	Sample No.
		3 / 2	19"	0	DARK BROWN TOP SOIL W/ GRASS, STONE	10"		
		2 / 4			GRAY SILTY F-SAND	6"		
					LIGHT BROWN SILTY F-SAND	3"		
		3 / 5	14"	.2	BROWN, LIGHT BROWN SILTY F-SAND W/ STONE	24"		
		5 / 5						
		5 / 5	24"	2	LIGHT BROWN, TAN SILTY F-SAND	24"		
		5 / 7					SAMPLE FOR TPHC	
		5 / 3	24"	0	LIGHT BROWN, TAN SILTY F-SAND	24"		
		5 / 5						
		4 / 4	24"	10	LIGHT BROWN, TAN SILTY F-SAND	24"		
		4 / 5					SAMPLE FOR TPHC	
		5 / 7	15"	0	LIGHT BROWN, TAN SILTY F-SAND	15"		
		9 / 8						

Rasteadn & D'Angelo, 1991

Raselaan & D'Angelo Associates, Inc.

BORING LOG

PROJECT: NAVFAC EARLE
PROJECT NO.: E1-1629-024
BORING NO.: PZ-03 G
Location: QUARTERS G
Coordinates: —
Drilling Method Used: Split Spoon 2"
Contractor: UNI-TECH DRILLING
Date: 10/25/92
Field Scientist/Engineer: J. EDWARDS
Water Table Depth: ≈20'
Hammer Weight: 140 LB
Notes:
Organic Vapor Instrument Used: OVM

Depth (feet)	Sample Interval	Blows per 6 inches	Adv. / Recov.	Org. vap. (ppm)	Sample Description	Strata Change	Comments	Sample No.
		2 / 3	22"	.2	DARK SILTY F-SAND TOP SOIL	15"		
1		3 / 3			LIGHT BROWN, DARK BROWN, TAN SILTY F-SAND	7"		
2		2 / 4	19"	Θ	DARK BROWN SILTY F-SAND	2"		
					LIGHT BROWN F-SAND w/ SILTY CLAY	7"		
3		4 / 4			LIGHT BROWN, TAN, GRAY SILTY F-SAND	10"		
4		4 / 3	24"	5	LIGHT BROWN, GRAY SILTY F-SAND	4"		
					LIGHT BROWN, TAN SILTY F-SAND	10"		
5		3 / 3			DARK GRAY SILTY CLAY w/ F-SAND	10"	SAMPLE FOR TPHC	
6		3 / 4	15"	2	DARK GRAY SILTY CLAY w/ F-SAND	15"		
7		5 / 4						
8		6 / 5	16"	Θ	DARK GRAY SILTY CLAY w/ F-SAND	16"		
9		6 / 7						
10		5 / 5	14"	Θ	DARK GRAY SILTY CLAY w/ F-SAND	14"		
11		6 / 7						
12		5 / 6	15"	Θ	DARK GRAY SILTY CLAY w/ F-SAND	15"		
13		6 / 5						
14		5 / 8	24"	Θ	DARK GRAY SILTY CLAY w/F-SAND	8"		
					LIGHT BROWN, TAN, GRAY, RUST F-M SILTY SAND	9"	SAMPLE	
15		5 / 9			DARK GRAY SILTY F-SAND	7"	FOR TPHC	

Raselaan & D'Angelo, 1991

Vaslaan & D'Angelo Associates, Inc.

BORING LOG

Project: E1-1624-024 EARLE

Project No.: QUARTER'S G

Boring No.: PZ-03 G

Depth (feet)	Sample Interval	Blows per 6 inches	Adv. / Recov.	Org. vap. (ppm)	Sample Description	Strata Change	Comments	Sample No.
16		8	24"	0	DARK BROWN, GRAY SILTY F- SAND	9"		
		9						
17		7			DARK GRAY, GRAY, TAN SILTY F-M SAND	15"		
		11						
18		7	24"	0	DARK GRAY C-SAND W/SILT	2"		
		7			DARK GRAY F-M SAND W/ SILT			
19		7				22"		
		9						
20		9	18"	0	DARK GRAY SILTY F-SAND	18"		
		7						
21		9						
		8						
22		7	24"	0	DARK GRAY M-C SAND W/ SILT	24"		
		9						
23		8						
		7						
24		9	24"	0	DARK GRAY F-C SAND W/ SILT			
		9						
25		8				24"	SAMPLE FOR TPHC	
		9						
26								
27								
28								
29								
30								
31								
32								
33								

© Vaslaan & D'Angelo, 1991

Rastelan & D'Angelo Associates, Inc.

BORING LOG

PROJECT: NAVFAC EARLE
PROJECT NO.: E1-1629-024
BORING NO.: MW-02
Location: QUARTERS G
Coordinates: —
Drilling Method Used: Split Spoon 2"
Contractor: J.E. FRITS
Date: 1/23/92
Field Scientist/Engineer: J. EDWARDS
Water Table Depth: 10'
Hammer Weight: 140 LB
Notes:
Organic Vapor Instrument Used: OVM

Depth (feet)	Sample Interval	Blows per 6 inches	Adv. / Recov.	Org. vap. (ppm)	Sample Description	Strata Change	Comments	Sample No.
		1 / 1	7"	0	BACK-FILL	7"		
		2 / 2						
		3 / 4	18"	0	LIGHT BROWN SILTY F-SAND	18"		
		5 / 7						
		6 / 9	21"	0	LIGHT BROWN SILTY F-SAND	21"	SAMPLE FOR TPHC	
		9 / 8						
6		6 / 9	14"		LIGHT BROWN SILTY F-SAND	14"		
7		9 / 8						
8		8 / 8	24"	0	LIGHT BROWN SILTY F-SAND	24"	SAMPLE FOR TPHC	
9		10 / 14						
10		6 / 7	20"	0	LIGHT BROWN SILTY F-SAND	6"		
11		8 / 5			LIGHT BROWN, RUSTY, TAN SILTY F-SAND	14"		
12		6 / 9	24"	0	LIGHT BROWN, RUSTY, TAN SILTY F-SAND	24"		
13		8 / 5						
14		10 / 7	24"	0	LIGHT BROWN, RUSTY, TAN SILTY F-SAND	19"	SAMPLE FOR TPHC	
		3 / 7			DARK GRAY SILTY CLAY W/ F-SAND	5"		

Rastelan & D'Angelo, 1991

Kleinfelder & D'Angelo Associates, Inc.

BORING LOG

Project : E-1629-024 EARLE Page 2 of 2

Project No.: E1-1629-024 QUARTERS G

Boring No.: MW-02

Depth (feet)	Sample Interval	Blows per 6 inches	Adv. / Recov.	Org. vap. (ppm)	Sample Description	Strata Change	Comments	Sample No.
16		6	24"	Θ	LIGHT BROWN, TAN, RUSTY SILTY F-SAND	8"		
		9						
17		11			DARK + LIGHT GRAY SILTY CLAY W/ F-SAND	16"		
		13						
18		9	24"	Θ	DARK + LIGHT GRAY SILTY CLAY W/F-SAND	24"	SAMPLE FOR TPHC	
		11						
19		13						
		20						
20								
21								
22								
23								
24								
25								
26								
27								
28								
29								
30								
31								
32								
33								

© Kleinfelder & D'Angelo, 1991

APPENDIX D

Decontamination Procedures

DECONTAMINATION PROCEDURES

(Laboratory and Field)

The field sampling equipment cleaning and decontamination procedures are as follows:

1. Non-phosphate detergent plus tap water wash
2. Tap water rinse
3. Distilled/deionized water rinse
4. 10% nitric acid rinse* (trace metal or higher grade HNO_3 diluted with distilled/deionized water rinse*
5. Distilled/deionized water rinse*
6. Acetone (pesticide grade) rinse**
7. Total air dry or pure nitrogen blow out**
8. Distilled/deionized water rinse**

* Only if sample is to be analyzed for metals.
** Only if sample is to be analyzed for organics.

APPENDIX E

Groundwater Sampling Procedures

Groundwater Sampling Equipment, Procedures and Methodologies

Sampling Procedures

All of the samples collected were analyzed by the referenced laboratory.

All sampling was in accordance with procedures and specifications set forth in the New Jersey Department of Environmental Protection's "Field Sampling Procedure Manual, February, 1988".

Monitoring Well Sampling

Groundwater samples were collected with a Teflon™ bailer. The following procedures/methodologies are listed under the section Groundwater Sampling Procedures found in the above referenced manual.

1. Prior to sampling, the elevation of groundwater within the well was determined using an electronic water level indicator. The measurement was recorded from the top of the casing (cap removed). The water level indicator was rinsed with distilled/deionized water and wiped with a clean paper towel prior to and after each use. This data was then used to calculate the volume of water within the casing (Casing Volume).

2. A field decontaminated PVC bailer was used to evacuate a minimum of three to five casing volumes of water. This was used to remove any stagnant or thermally stratified water within the well. Standard care was used not to overly agitate, aerate or disturb the water within the well. In addition to the physical measurements, physio-chemical parameters were collected. This included specific conductivity , pH and temperature.

3. Upon completion of bailing operations, the well was immediately sampled using a decontaminated, dedicated Teflon™ bottom filling bailer. The bailer was attached to a field decontaminated Teflon™ coated stainless steel leader six feet in length. The bailer was lowered into the well using dedicated clear polyethylene well rope. The bailer was removed from the well with minimal disturbance. The 40 ml volatile organic compounds vials were filled first. Each vial was checked to assure that all headspace was eliminated. The semi-volatile containers were then filled, followed by the remaining containers. All containers were preserved as per the appropriate procedures. The sample containers were then placed on ice in a clean cooler for shipment.

4. The glassware was labelled and sealed. Before collecting the next sample, all pertinent data was recorded in a log book and the sample analysis request form/chain of custody record was completed.

5. After decontaminating all equipment, the samples were immediately delivered to the laboratory for analysis.