N60478.AR.000523
NWS EARLE
5090.3a

FINAL
WORK PLAN
FOR
BILGE WATER PLANT
AT
NAVAL WEAPONS STATION - EARLE
LEONARDO, NEW JERSEY

VOLUME I OF II

Issued:

May 4, 1999

Prepared for:

Naval Facilities Engineering Command
10 Industrial Highway
Lester, PA 19113

Prepared by:

Foster Wheeler Environmental Corporation
2300 Lincoln Highway
One Oxford Valley - Suite 200
Langhorne, PA 19047 - 1829

REMEDIAL ACTION CONTRACT N62472-94-D-0398
DELIVERY ORDER NO. 0034

Revision	Date	Prepared By:	Approved By:	Pages Affected
1	May 4, 1999	M. Heffron, P.G.	J. Gorgol, P.E. D.DiCesare	1 through 27

WORK PLAN
FOR
BILGE WATER PLANT
AT
NAVAL WEAPONS STATION - EARLE
LEONARDO, NEW JERSEY

TABLE OF CONTENTS

Section Page

1.0 INTRODUCTION---------- 1

2.0 PROJECT LOCATION AND DESCRIPTION---------- 1

3.0 SCOPE OF WORK----------3

3.1 TASK 1 - PROJECT PLANNING/MANAGEMENT---------- 4

3.1.1 Subtask 1A - Pre-Construction Submittals---------- 4

3.1.2 Subtask 1B - Mobilization/Facilities---------- 5

3.1.3 Subtask 1C - Home Office Support----------5

3.2 TASK 2 - PREPARATION WORK FOR INSTALLATION OF RAILROAD SPILL PANS---------- 5

3.3 TASK 3 - INSTALLATION OF RAILROAD SPILL PANS---------- 6

3.4 TASK 4 - REPLACEMENT OF TRANSFER LINE PIPING---------- 7

3.4.1 Subtask 41 - Pipe Testing Procedures---------- 9

3.5 TASK 5 - INSTALLATION OF SPILL CONTAINMENT PIPING---------- 9

3.5.1 Subtask 5-1 Gravity Pipe Testing Procedures---------- 10

3.6 TASK 6 - INSTALLATION OF TRANSFER STATION SPILL PADS---------- 10

3.7 TASK 7 - INSTALLATION OF SUMP AND OVERFLOW BASIN---------- 10

TABLE OF CONTENTS
(Continued)

Section Page

3.8 TASK 8 - GRADING AND PAVING OF THE AREA SURROUNDING THE BILGE WATER PLANT---------- 12

4.0 WASTE REMOVAL PLAN----------12

5.0 FIELD SAMPLING AND ANALYSIS PLAN---------- 13
5.1 INTRODUCTION---------- 13
5.2 PERSONNEL RESPONSIBILITIES---------- 13
5.3 FIELD SAMPLING ACTIVITIES---------- 14
5.3.1 Sample Tracking System----------14
5.3.2 Sample Analytical Requirements---------- 15
5.3.3 Sample Packaging and Shipping---------- 15
5.3.3.1 Environmental Samples----------15
5.3.4 Sample Documentation----------17

6.0 HEALTH AND SAFETY REQUIREMENTS---------- 17

7.0 WASTE REMOVAL/REGULATORY COMPLIANCE---------- 18
7.1 MANIFESTS/SHIPPING PAPERS---------- 18
7.2 WASTE TRANSPORT AND DISPOSAL----------18
7.3 SOLID WASTES---------- 18
7.4 SOILS---------- 18

8.0 PROJECT MANAGEMENT----------18
8.1 PROJECT SCHEDULE----------18
8.2 PROJECT STAFFING PLAN----------20
8.3 MEETINGS----------20

9.0 QUALITY ASSURANCE/QUALITY CONTROL----------20
9.1 ORGANIZATION AND RESPONSIBILITIES----------20
9.2 QA/QC FIELD AUDITS----------22
9.3 FIELD CHANGES AND CORRECTIVE ACTIONS----------22
9.4 SUBMITTALS----------22
9.5 TESTS AND INSPECTIONS----------25
9.6 DOCUMENTATION----------25
9.6.1 Operations and Record Keeping---------- 25
9.6.2 Photographic Documentation---------- 25

TABLE OF CONTENTS
(Continued)

LIST OF FIGURES

2-1 Site Location Map----------2
8-1 Project Schedule---------- 19
8-2 Organization Chart----------21
9-1 Change Request Form---------- 23
9-2 Submittal Register----------24
C-1 Bilge Water Plant Existing Conditions----------26
C-2 Bilge Water Plant Spill Containment Site Plan---------- 27
C-3 Bilge Water Plant Spill Containment Details and Sections---------- 28

LIST OF TABLES

3-1 Required Spill Containment Volumes----------11
3-2 Provided Spill Containment Volume---------- 11
5-1 Sampling and Analysis Requirements----------16

APPENDICES

Appendix A: Railroad Spill Pan Installation Instructions
Appendix B: Railroad Spill Pan Equipment Specifications
Appendix C: Excavation, Piping Installation Specifications
Appendix D: Material Specification Sheet for Asphalt Epoxy
Appendix E: Calculations for Spill Containment

1.0 INTRODUCTION

Foster Wheeler Environmental Corporation (Foster Wheeler Environmental) has been contracted by the Northern Division, Naval Facilities Engineering Command (Northern Division) to install railroad spill pans, construct spill containment for the off-loading and loading operations at the facilities, and modify the existing piping network at the Bilge Water Plant at Naval Weapons Station (NWS) Earle located in Leonardo, NJ. This Work Plan is being submitted to satisfy the pre-construction submittal requirements included in paragraph 1.2.1, Pre- and Post-Construction Documentation of the Statement of Services for Delivery Order No. 0034 under Remedial Action Contract No. N62472-94-D-0398. The Health and Safety Plan shall be submitted as a separate submittal. Quality assurance aspects of the project are addressed in this Work Plan, and there shall be no separate Quality Assurance Plan submittal.

The final set of design drawings will be signed and sealed by a professional engineer in the State of New Jersey.

2.0 PROJECT LOCATION AND DESCRIPTION

Naval Weapons Station Earle (NWS-Earle) is located in Monmouth County in east-central New Jersey as presented on Figure 1, Site Location Map. The base consists of a Mainside area and a Water Front area occupying a total of approximately 11,134 acres. The Mainside of the base is located approximately 10 miles inland from the Atlantic Ocean. The Mainside and the Waterfront areas of the base are linked by a narrow tract of land that serves as a right-of-way for a government road and railroad line.

NWS Earle is responsible for furnishing ammunition to the naval fleet, and coordinates all port services and logistical support for home-ported and visiting ships. The base also conducts safety inspections, supervises ammunition loading for the United States Coast Guard, and provides marine fire fighting capability and standby tug services.

The Bilge Water Plant (the "Plant") is located at the Waterfront area of the NWS-Earle Base. The Waterfront consists of an ammunition depot and associated piers for loading and servicing the naval fleet. The Bilge Water Plant is a small treatment operation which processes bilge water from the ships docked at the piers. The bilge water is transported from ships at the pier in railroad cars, and then transferred to the Bilge water Plant for processing.

Present Activities

Bilge water from ships docked at the pier is transported to the treatment facility via rail tank cars. Tank cars being utilized have capacities of 10,000, 12,000 or 14,000 gallons. The Navy primarily uses 10,000 gallon tank cars for the bilge water transfer operations.

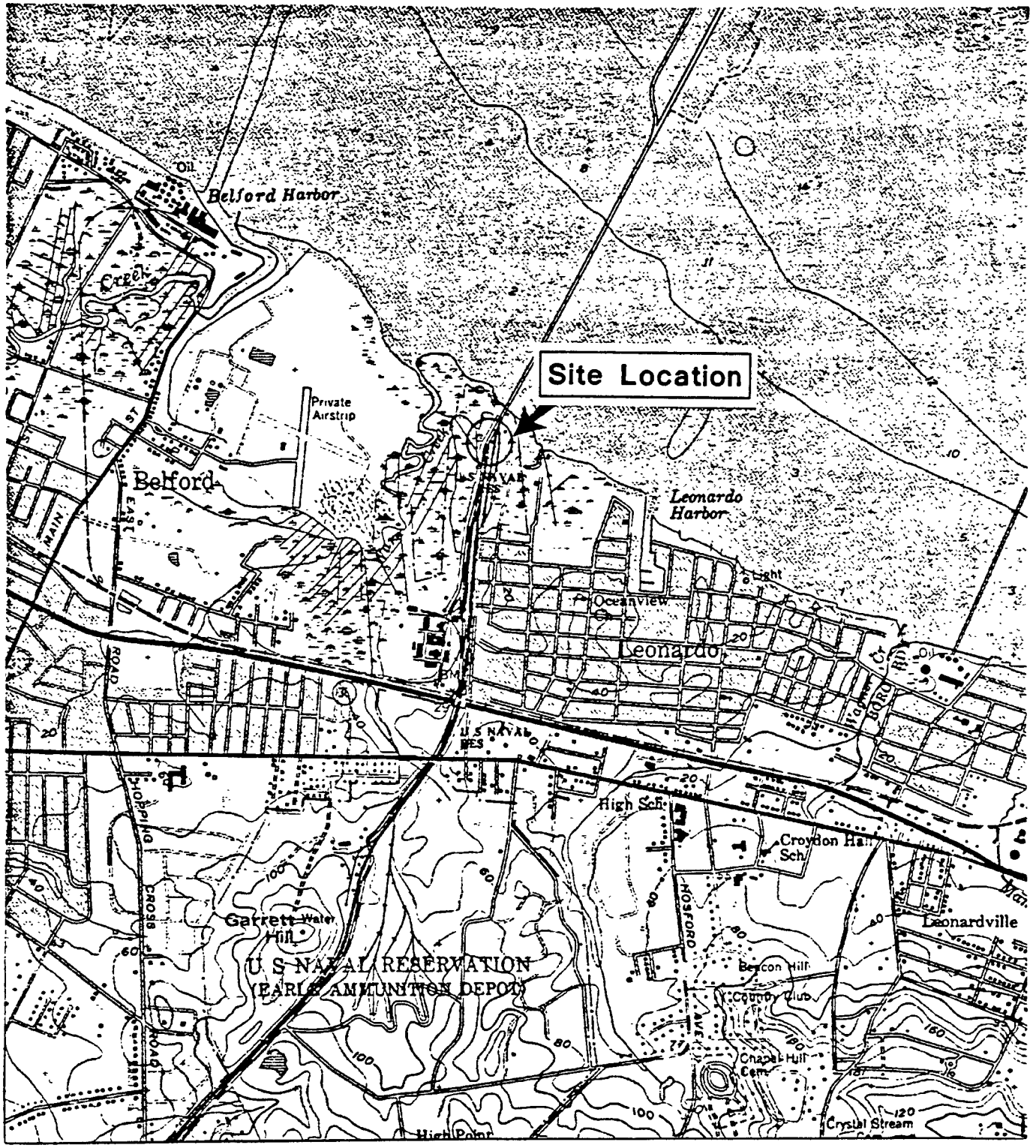

0 2000 4000 FT

Source: U.S.G.S. Topographic Maps (7.5 Minute)
Sandy Hook, N.J.–N.Y., 1954 (Photorevised 1981)

QUADRANGLE LOCATION

NWS – Earle

Colts Neck, N.J.

Site Location Map
Bilge Water Plant

FOSTER WHEELER ENVIRONMENTAL CORPORATION

earle\siteloc.dwg

Only a few 12,000 and 14,000 gallon tanker cars exist at the facility. The treatment plant is bordered on the west and east by rail lines which are used for unloading of bilge water and loading of treatment by-products respectively (see attached drawing C-1 "Existing Site Conditions").

Rail cars are brought from the pier to the west side of the treatment building for off-loading bilge water. There are three piping stick-ups, connected to a single underground piping manifold, which is connected to a vacuum pump inside the Bilge Water Plant. The piping stick-ups are three-inch diameter pipes, fitted with a male cam-fitting. Rail cars are connected to the transfer piping by flexible hoses. The area where unloading is presently performed is a non-vegetated gravel area. The only spill containment provided is a small curbed pad around each of the piping connections. The existing curbed areas are designed to hold a minor spill for clean-up with an absorbent material or similar method.

The bilge water being treated at the plant is an oily water which is separated through several processes resulting in three separate discharge streams: 1) treated water; 2) oil and sludge; and 3) wash water. The original design of the system provided a connection for loading out each waste stream from the Bilge Water Plant along the east side of the site to rail cars. As with the piping set-up on the west side of the plant, there are piping stick-ups for the connection of hoses to facilitate the loading of tank cars from the plant. Presently only wash water, oil and sludge are loaded to rail cars (oil infrequently). Treated water is discharged directly to the Township of Middletown Sewage authority via an underground force main. In addition, collected oil and sludge is predominately removed from the site using drums instead of rail cars. As with the rail car unloading area on the west side of the plant, the area where rail tank cars are loaded with treatment by-products is predominately a non-vegetated gravel area with only a small containment curb at each connection point.

At present a leak or spill from either the loading or unloading areas could result in the contamination of the soil and potential seepage to the groundwater. All of the below grade piping is also comprised of only single-walled piping.

3.0 SCOPE OF WORK

The objective of the modifications at the Bilge Water Plant are to ensure that all the piping and associated loading and off-loading areas have adequate secondary containment and comply with all the applicable state and federal requirements. The spill containment measures were determined based on the requirements of N.J.A.C. 7:1E-2.6 "Facility Drainage and Secondary Containment". The regulations require that sufficient containment be provided to contain the volume of the largest tank and six inches of rainwater.

In an effort to meet the requirements of N.J.A.C. 7:1E-2.6, Foster Wheeler is proposing fiberglass spill pans under each rail car in both the loading and unloading areas. These spill pans will discharge to a central sump with an overflow basin to handle catastrophic spill events. Drains will be installed at each connection point to convey spills to a central sump. All piping utilized for the spill containment system will be double containment HDPE fused piping. In addition, all existing single containment transfer piping (used to transfer liquid between the rail cars and treatment plant) will be replaced with all new double containment HDPE piping.

The location and details of spill containment measures are presented on attached drawing C-2 "Proposed Spill Containment Measures" and Drawing C-3 "Details and Sections" respectively.

3.1 TASK 1 - PROJECT PLANNING/MANAGEMENT

Project Planning/Management activities include the preparation of pre-construction submittals, procurement of materials and subcontractors, mobilization to the site, and providing home office support functions during the estimated period of performance. The subtasks involved in Project Planning/Management are described below.

3.1.1 Subtask 1A - Pre-Construction Submittals

Foster Wheeler Environmental will prepare and submit the following pre-construction documents to the Navy:

Work Plan
The Work Plan presents Foster Wheeler Environmental's approach to executing the project, including the site description, statement of work, procurement approach, system information, materials, engineering data, transportation and disposal data, and sampling and analytical requirements.

Health and Safety Plan (HASP)
The HASP includes Foster Wheeler Environmental's approach to providing for the health and safety of its employees during the project.

Discharge Prevention, Containment, and Countermeasure Plan
A detailed report discussing the spill containment measures constructed at the Bilge Water Plant in Leonardo, New Jersey shall be submitted for inclusion in NWS-Earle's Discharge Prevention, Containment and Countermeasure (DPCC) Plan. Foster Wheeler Environmental shall work with NWS-Earle personnel on the required format of the DPCC submission.

Soil Erosion and Sediment Control Plan
A Soil Erosion and Sediment Control Plan shall be prepared and submitted, on the Navy's behalf for the excavation and grading work to be conducted at the Bilge Water Plant at the Naval Weapons Station-Earle facility in accordance to the Soil Erosion and Sediment Control Act, Chapter 251, Pl.L. 1975, as amended (NJSA 4:24-39 et seq).

Equipment Submittals
The specifications for the equipment, including the railroad spill pan and the double-walled piping are contained in the attached appendices.

Other submittals are included on the Submittal Register in Section 9.0.

3.1.2 Subtask 1B - Mobilization/Facilities

Mobilization will consist of contacting appropriate Navy personnel at NWS Earle to arrange for contractor passes and to coordinate support requirements for the installation of the piping and containment systems. Site operations will be managed from Foster Wheeler Environmental's Langhorne, PA office.

3.1.3 Subtask 1C - Home Office Support

Foster Wheeler Environmental will provide home office support for the two month project duration. Home office support includes the preparation of the required monthly progress, financial, and technical reports.

3.2 TASK 2 - PREPARATION WORK FOR INSTALLATION OF RAILROAD SPILL PANS

As per conversations with the Navy, any railroad ties in disrepair shall be replaced by the Navy railroad contractor on base prior to Foster Wheeler Environmental starting their field work.

The underground piping layout for off-loading to the Bilge Water Plant and the underground drainage network for the spill containment system shall be marked out in order to properly place the location of the railroad spill containment pans and associated trenches.

A backhoe, equipped with a narrow bucket, and laborers shall be used to remove the top three (3) inches of railroad ballast from between the railroad ties in the area where the railroad spill pans are to be located. Instructions for the installation of the railroad spill pans are located in Appendix A. Equipment specifications for the railroad spill pans to be installed are located in Appendix B. The destination of the railroad ballast shall be determined by Navy personnel. The ballast removed shall be replaced with pea gravel

(1/2" diameter nominal) to ensure there are no rough edges underlying the fiberglass spill pans.

The backhoe shall be used to excavate the trenches for the installation of the cross drains and necessary drainage piping. It may be necessary to install longer railroad ties in the area of the cross drains in order to support the cross drains on the side pan area, outside the rails. The specific information regarding the installation of the cross drains is located in Appendix A.

Silt fences shall be installed in accordance to the Soil Erosion Control Plan.

3.3 TASK 3 - INSTALLATION OF RAILROAD SPILL PANS

Fiberglass railroad track spill pan sets are to be installed in each loading and unloading area. The railroad track spill pans equipment specifications are located in Appendix B. Each set is made up three panels: a center panel, which fits between the track rails, and two side panels, which fit to either side of the of the rail. The width and length of the spill pans are sufficient to capture leaks dripping down from any portion of the rail car. The panels feed into a trench drain at the interface of the panel sets. Trench drains discharge to subsurface, double containment piping.

The spill pans are constructed of a fiberglass resin that is resistant to the oily bilge water being treated at the facility. Each pan section is made of a single seamless piece of fiberglass. Spill pans are joined at the trench drain between pan sets. The spill pans drain to trench drains spaced throughout the pans. The trench drains are the lowest points by several inches to ensure positive flow toward the drains. Each trench drain will have a removable grate cover to prevent the entry of objects which could potentially clog the trench drain piping. Each trench drain will discharge to a six-inch inside diameter and twelve-inch outside diameter, double containment HDPE piping, which will convey liquid to the central sump and overflow basin. The piping shall be buried at the depths specified in Drawing C-2, and sloped towards the sump south of the plant.

The product specific information concerning the spill pans is located in Appendix B. The details and specifications concerning the installation of the railroad spill pans are located in Appendix A. A representative of the railroad spill pan manufacturer will visit the site for one day in order to address any concerns of the track pan installations.

Western Side of Bilge Water Plant

A total of four railroad spill pans shall be installed on the railroad tracks on the western side of the Bilge Water Plant in order to provide secondary containment for the off-loading operations from the railroad tank cars, into the Bilge Water Plant. The railroad spill pans will provide spill containment coverage for the three off-loading stations on the

western side of the facility. An 18'-11" railroad spill pan shall be located adjacent to the northern-most off-loading station on the western side of the facility. Two 39'-5" railroad spill pans shall be located in the central portion of the off-loading area, and an additional 18'-11" railroad spill pan shall be located on the southern end of the off-loading area on the western side of the facility.

All of the railroad spill pans shall be of the Type III flat-bottom variety with anti-slip coating, and UV protection. The railroad spill pans shall consist of a center pan, and two outer side pans. The center spill pans are placed between the rails and the outer side pans are placed on the outside of the rails. Drawing C-2 provides a detailed layout of the components, and Appendix A provides a detailed installation guide. Three cross drains with piping shall be installed between the railroad spill pans as depicted on Drawings C-2 and C-3. The piping shall be buried at the depths specified in Drawing C-2, and sloped towards the sump south of the plant.

Eastern Side of Bilge Water Plant

A total of three railroad spill pans shall be installed on the railroad tracks on the eastern side of the Bilge Water Plant in order to provide secondary containment for the loading operations from the Bilge Water Plant to the awaiting railroad tanker cars. The railroad spill pans will provide spill containment coverage for the two loading stations on the eastern side of the facility. An 18'-11" railroad spill pan shall be located adjacent to the northern-most off-loading station on the eastern side of the facility. One 39'-5" railroad spill pan shall be located in the central portion of the off-loading area, and an additional 18'-11" railroad spill pan shall be located on the southern end of the off-loading area on the eastern side of the facility.

Drawing C-2 provides a detailed a layout of the components, and Appendix A provides a detailed installation guide. Three cross drains with piping shall be installed between the railroad spill pans as depicted on Drawings C-2 and C-3.

3.4 TASK 4 - REPLACEMENT OF TRANSFER LINE PIPING

All existing three-inch diameter, single walled subsurface transfer lines between the flexible line connections at the rails to the Bilge Water Plant will be replaced with three-inch inner diameter and six-inch outer diameter, dual containment high-density polyethylene (HDPE) fused piping.

The trench excavation and backfilling operations for the pipe installation shall be conducted in accordance to the specifications outlined in Appendix C. The new piping shall be installed to a minimum depth of 3.5 feet below grade to ensure that the lines are below the frost line. Care shall be taken in placing the piping in the trenches to minimize stress placed on any portion of the piping network. To prevent dual-containment piping

from floating during installation, sections of the pipe shall be held in place with soil with good bridging properties.

The old piping shall be removed wherever possible, and flushed and capped in place where it cannot be readily accessed. The old piping shall be removed, decontaminated with a pressure washer, and then disposed as demolition debris.

The specifics regarding the HDPE dual containment piping are located in Appendix D. The carrier and containment pipes are joined with simultaneous butt-fusion welding. The dual containment piping arrives from the manufacturer with the carrier pipe extended beyond the containment pipe to allow visual alignment in the carriage of the butt-fusion device. All personnel with be trained on site in the operation of the butt-fusion machine prior to the connection of the piping network. Appendices C and D detail the installation specifics of the dual containment piping. The new piping will be placed in the same location as the existing piping. The transfer line piping shall be installed prior to installing the drainage piping associated with the spill containment system due to the fact that the transfer piping will be installed at a greater depth than the drainage piping. The old piping shall be excavated, characterized, and disposed off site.

Since the downstream end of the transfer piping is at the sump inside of the treatment building, which is not easily accessible, inspection pipes (as proposed for the gravity spill containment pipes) are not feasible. Therefore, to continuously monitor for line leaks, an electronic leak detection cable will be inserted into the annular space to detect liquid. The leak detection cable is threaded through the piping within the annular space. If liquid comes in contact with the cable, an alarm will sound inside the treatment building. A flashing light, connected to the leak detection system, shall also be installed outside of Building R-30. The alarm will be monitored by treatment plant personnel. The equipment specifications for the leak detection cable and alarm panel are located in Appendix D.

The piping shall be installed in accordance to the manufacturers' specification contained in Appendix D. At the flexible line connection location, where the subsurface transfer pipes exit the ground, a boot between the inner and outer piping will be installed with an air valve (Detail 10 of Drawing C-3). The air valve will allow pressurization of the annular space between the piping to periodically test the system integrity.

An electrical interlock switch shall also be installed adjacent to the railroad tracks, on the eastern side of the Bilge Water Plant, in order to operate the transfer pump located inside the plant. The electrical interlock switch will require the operator to turn on the transfer pump, which is used to fill up the railroad tanker cars, from outside, adjacent to the loading area to ensure that someone is visibly watching the transfer when the pump is turned to the "on" position. This added feature will aid in ensuring that if the hose comes out of the tanker truck, someone is there to observe the problem.

3.4.1 Subtask 4-1: Pipe Testing Procedures

All underground HDPE pipe connections will be butt-fuse welded connections and will be air tested for piping integrity prior to putting the system on-line. Appendix C details the pipe testing procedures. All double containment piping will have the means to be monitored continuously for leakage and be pressure tested periodically for system integrity.

3.5 TASK 5 - INSTALLATION OF SPILL CONTAINMENT PIPING

Double-walled HDPE spill control piping shall be installed from the track pans and spill pad basins (off-loading and loading stations). The double-walled piping shall be a six inch inner diameter pipe and a 12 inch outer diameter pipe with butt fuse-welded connections. The spill containment piping shall discharge to a central concrete sump. Drawing C-2 depicts the layout of the piping network, and Drawing C-3 depicts the piping details.

The specifications concerning excavation and backfilling of the trenches for the piping installation are provided in Appendix C.

The HDPE piping connections associated with the railroad spill pans and the transfer station spill pads shall be manufactured at the supplier. Detail 4 of Drawing C-3 depicts the piping and basin configuration. Fusion of the piping to the basins by the manufacturer prior to delivery will allow for quicker installation at the site. Appendix D contains information regarding the fusion of piping to sumps.

At the upstream end of the gravity spill containment piping (at the trench drains, spill pads and overflow basin) the annular space between the inner and outer piping will be sealed (Detail 4 of Drawing C-30). At the downstream end (at the sump) an inspection tube will be installed in the outer pipe to catch any liquid entering the annular space (Detail 9 of Drawing C-3). This will allow continuous monitoring of the system for breaches. The spill containment line from the pump in the sump to the treatment building will be fitted with a leak detection cable in the annular space to continuously monitor for leaks. The leak detection cable will be tied to a leak detection panel which will send a signal to the alarm system in the treatment building. The alarm will be monitored by the operator on duty at the treatment plant.

Additionally, an air valve will be placed on the outer piping of all the containment piping at the sump to allow pressurization of the annular space to periodically inspect the system integrity (Drawing C-3, Detail 9).

3.5.1 Subtask 5-1: Gravity Pipe Testing Procedures

Details concerning the testing procedures are presented in Appendix C.

3.6 TASK 6 - INSTALLATION OF TRANSFER STATION SPILL PADS

The piping for the transfer of liquids to and from the Bilge Water Plant are located adjacent to the railroad tracks. The piping is run below grade, except for when it comes to the surface to allow connection to hoses. Flexible hoses are used to connect the rail cars to the subsurface transfer lines. To capture potential spills that may occur at the ground connection, new larger transfer station spill pads with drains will be installed around each of the connections to replace exiting transfer station spill pads. Drawing C-2 provides the location of the transfer station spill pads. The new transfer station spill pads will extend up to the edge of the track spill pans in the direction of the flexible hose alignment. Each transfer station spill pad will be asphalt coated with an epoxy surface treatment to prevent oily bilge water from degrading the asphalt surface. Detailed information on the epoxy coating for the asphalt is contained in Appendix E. A small catch basin will be provided at each spill pad to capture any fugitive spills. Detail 4 of Drawing C-3 depicts the spill pad detail. The transfer station spill pad basins will be connected to double containment underground piping which will discharge to the central sump and overflow basin. Detail 4 and 7 of Drawing C-3 depicts the basin and piping connection details.

When the flexible hose is not in use, it will be stored on the side rail track pans to capture any residual liquids that may remain in the piping. When a rail car is to be attached to the treatment building piping, it will first be attached to the ground piping connection by pulling the flexible line from the track pan over the spill pad to the connection point. The flexible line will then be connected to the rail car. In this manner the flexible piping will never be underlain by an un-contained surface, thus reducing the potential for accidental discharge.

3.7 TASK 7 - INSTALLATION OF SUMP AND OVERFLOW BASIN

All spill control piping from track pans and spill pad basins will discharge to a central concrete sump. Drawing C-2 depicts the piping layout and the sump and overflow basin location. The sump has interior dimensions of five feet by five feet by four and a half feet deep. The sump has a bottom elevation of 5.5 above mean sea level (MSL). Discharge piping from the spill containment measures enters the sump from the east and west side at an invert of 6.5 MSL. The south wall of the sump has a three foot wide rectangular weir set at an elevation of 9.0 MSL. The weir discharges to an asphalt overflow basin to the south of the sump. The interior of the sump will be epoxy coated to

prevent leaks. Appendix E contains specifics on the asphalt coating. The configuration of the sump is presented on Detail 9 of Drawing C-2.

The overflow basin has been sized to allow the spill containment system to hold an aggregate volume of the largest tank and six inches of rainfall. The required volume of containment was determined to be 31,669 gallons as presented in Table 3-1 below. A total of 33,446 gallons of containment is provided as presented in Table 3-2 below. Appendix F contains the calculation sheets for the volume determinations.

Table 3-1: Required Spill Containment Volume

Source	Volume (gal)	
Largest rail car	14,000	
Rainfall (6"):		
Track pans (2,316 sf)	8,662	
Transfer spill pads (90 sf)	337	
Sump (30 sf)	112	
Overflow basin (1780 sf)	6,658	
	Total	**29,769**

Table 3-2: Provided Spill Containment Volume

Location	Volume (gal)
Overflow basin	28,330
Track pans	4,351
Sump	785
Total	**33,466**

Water accumulated in the sump will be removed using a submersible pump within the sump. Collected rainwater and spilled oily water will be pumped to the treatment building for processing and disposed in the same manner that bilge water is presently treated.

A 25 gpm explosion proof pump shall be used in the sump to transfer liquids from the sump to the Bilge Plant. The pump will be controlled from the surface of the sump using a weather proof switch. The pump will be manually operated with an automatic shut off when the level has dropped below the pump level. Collected water will be pumped through a three-inch double containment line into the Bilge Water Plant. A high level float, connected to a strobe light, shall be installed in the sump. A ground-fault interrupter receptacle shall also be installed adjacent to the pump control switch.

Water accumulated in the overflow basin will be drained to the sump via a four inch diameter double containment pipe entering the sump from the south. Flow through the basin drain line will be regulated manually using a butterfly valve in the sump. The valve will be controlled by a hand wheel located at the top of the sump above level of containment. The wheel will be accessible by opening the sump cover and will not require entry into the sump. Detail 1 of Drawing C-3 depicts the sump configuration.

3.8 TASK 8- GRADING AND PAVING OF THE AREA SURROUNDING THE BILGE WATER PLANT

The area surrounding the Bilge Water Plant shall be graded and covered with asphalt in accordance to the grading plan depicted on Drawing C-2. The details of the asphalt placement are presented in Detail 12 of Drawing C-3. The earthwork shall be conducted in accordance to the specifications contained in Appendix C.

An outlet structure shall also be installed on the northeastern portion of the parking lot in order to facilitate site surface run-off and drainage. The location of the outlet is provided in Drawing C-2 and the details are provided on Detail 2 of the same drawing.

4.0 WASTE REMOVAL PLAN

This section addresses the handling of waste streams that will be generated from on-site activities. The work being conducted is in an area that is anticipated to be clean. If stained soils or soils emitting an odor, or registering elevated readings on an organic vapor analyzer, are encountered, the soil shall be stock-piled for off-site removal. The soils would be characterized and removed for either off-site disposal or recycling. All of the appropriate state and federal regulations regarding soil disposal will be implemented.

The ballast stone that is removed from the railroad tracks for replacement with pea gravel for the installation of the railroad track pans shall be stock-piled at the Navy's direction for possible re-use at the facility.

The soil removed from the site during the re-grading shall be characterized and either used as fill material if clean, or disposed off-site. Section 5 details the laboratory analyses for soil classification, and Section 7 provides the specifics on off-site disposal.

The piping that is removed from the existing tanker car loading and off-loading system shall be placed in lined, covered/tarped roll-off containers, characterized and properly disposed based on the characterization. It is anticipated that the piping will be characterized as non-hazardous and disposed in a landfill.

All general waste material generated from packing material, etc. shall be contained in a roll-off container and properly disposed at the closure of the modifications.

5.0 FIELD SAMPLING AND ANALYSIS PLAN

5.1 INTRODUCTION

Foster Wheeler Environmental Corporation (FWENC) is submitting this Sampling and Analysis Plan (SAP) for the work at the Bilge Water Plant at the Naval Weapons Station (NWS) Earle located in Leonardo, NJ. The purpose of the sampling is to analyze the excavated soils for waste characterization in order to properly dispose of the surplus soils removed from the excavation work at the site. This work is being performed under Delivery Order No. 0034 to Navy Contract N62472-94-D-0398

The SAP presents the procedures to be followed during the excavation and regrading activities at the Bilge Water Plant. The SAP specifically addresses the following areas:

- Analytical Requirements
- Responsibilities of Site Personnel
- Sample Analytical Program
- Sample Packing and Shipping
- Documentation
- Field Sampling Program
- Quality Assurance/Quality Control
- Procedures for Field Changes and Corrective Actions

5.2 PERSONNEL RESPONSIBILITIES

The project team will include the following personnel:

The Senior Project Engineer/Manager (SPEM) has final responsibility for the development of the SAP and management of the project team.

The Project Superintendent (PS) is responsible for assuring that proper collection, packaging, preservation, and shipping of samples is performed in accordance with the SAP. In addition, the PS is responsible for coordinating with the subcontracted laboratory during sample analysis and for reviewing the analytical data received from the laboratory.

The Site Health and Safety Officer (SHSO) is responsible for the safety of all site personnel as detailed in the site-specific Health and Safety Plan (HASP), presented under separate cover.

The Laboratory Subcontractor is responsible for supplying all services (including labor), equipment, and material required to perform the analysis of the environmental samples. The laboratory subcontractors are responsible for following all specified methodology protocols, including quality assurance/quality control (QA/QC) requirements. In addition, the laboratory subcontractors are responsible for the proper disposal, including all associated costs, of the environmental samples upon completion of the analytical work.

5.3 FIELD SAMPLING ACTIVITIES

This section addresses the field investigation activities, including:

- Sample Tracking System
- Sample Analytical Requirements
- Sample Packaging and Shipping
- Sample Documentation

5.3.1 Sample Tracking System

The objective of the sample identification system is to provide a framework for developing sample numbers that are unique to that sample and convey information regarding sample type that will enable data users to easily identify sample locations. The sample designation is established in order to integrate the data into the Navy's Geographical Information System (GIS)

The first two number of the sample tracking system shall refer to this site specific location, which in our case is the Bilge Water Plant (Building R-30). All soil sample identifiers shall begin with the number R30. For example R30Soil01 would refer to Building R-30, soil sample one. In order to identify the specific sample, the date and round shall be appended to the sample name. R30Soil01-99-1 would refer to Building R-30, soil sample 1 taken from the first round in 1999. A "D" would be added to the sample nomenclature to indicate a duplicate sample. For the purposes of this sampling effort, there shall only be soil samples collected for characterizing the soil for disposal.

A cumulative sampling master log will be maintained as the field program progresses. The samples taken will be referenced to each sampling location in the master log and on a detailed site map.

All location information for the samples will be recorded in the field sampling logbook (Section 5.3.4).

5.3.2 Sample Analytical Requirements

Table 5-1 specifies location, number of samples, matrix, laboratory analyses, and rationale for each sample type. There are no preservation requirements for the soil samples to be collected.

5.3.3 Sample Packing and Shipping

The objective of the sample packaging and shipping requirements are to maintain sample integrity from the time a sample is collected until it is received at the analytical laboratory. Chain-of-custody (COC) forms, sample labels, custody seals, and other sample documents will be completed to maintain sample integrity. Specific procedures for packaging and shipping of environmental samples are presented below. These procedures were obtained from the NJDEP Field Sampling Procedures Manual.

5.3.3.1 Environmental Samples

Low-concentration samples are defined as environmental samples and should be packaged for shipment as follows:

1. A sample label is attached to the sample bottle. The label should be taped over with clear packing tape to preserve legibility.

2. A picnic cooler (such as a Coleman or other sturdy cooler) is typically used as a shipping container. In preparation for shipping samples, the drain plug is taped shut from the inside and outside, and a large plastic bag is used as a liner for the cooler. Approximately 1 inch of packing material, such as asbestos-free vermiculite, perlite, or styrofoam beads, is placed in the bottom of the liner.

3. The sample bottles are placed in the lined picnic cooler. Cardboard separators, and/or additional packing material, should be placed between the bottles to prevent breakage during shipping.

TABLE 5-1
NAVAL WEAPONS STATION-EARLE
DELIVERY ORDER 0034: BILGE WATER PLANT
SAMPLING AND ANALYSIS REQUIREMENTS

Media	*Analyses*	*Frequency*	*Quantity* *	*Method*	*Rationale*
Soil	Total Petroleum Hydrocarbons	Composite soil samples collected from excavated soils	3	SW846 Method 418.1	Analytical results shall be used to classify soils for transportation and disposal.
Soil	TOX	Composite soil samples collected from excavated soils	3	SW846 Methods 3540A/9020A	Analytical results shall be used to classify soils for transportation and disposal.
Soil	Ignitability, Corrosivity, Reactivity	Composite soil sample collected from excavated soils	1	Ign: SW-846 Method 1020 Corr: SW846 Method 1110\ React: SW846 Chapter 7	Analytical results shall be used to classify soils for transportation and disposal.
Soil	Total Metals	Composite soil sample collected from excavated soils	1	TAL Metals SW846, 6010/7000	Analytical results shall be used to classify soils for transportation and disposal.
Soil	PCBs	Composite soil sample collected from excavated soils	1	PCBs SW846 Method 8080	Analytical results shall be used to classify soils for transportation and disposal.

* Quantities do not include quality assurance samples

4. Aqueous samples for low or medium-level analysis must be shipped cooled to 4°C with ice. No ice is used in shipping high-level aqueous samples, or soil samples, or dioxin samples. Ice is not required in shipping soil samples, but may be utilized at the option of the sampler. All cyanide samples, however, must be shipped cooled to 4°C.

5. The lined cooler is filled with packing material (such as asbestos-free vermiculite, perlite, or styrofoam beads), and the large inner liner is taped shut. Sufficient packing materials should be used to prevent sample containers from making contact during shipment.

6. The paperwork being shipped to the laboratory is placed inside a plastic bag. The base is sealed and taped to the inside of the cooler lid. A copy of the COC form should be included in the paperwork sent to the laboratory. The last block on the COC form should indicate the overnight carrier and airbill number. The airbill must be filled out before the samples are handed over to the carrier. The laboratory should be notified if the shipper suspects that the sample contains any substance for which the laboratory personnel should take safety precautions.

7. The cooler is taped shut with strapping tape (filament-type).

At least two signed custody seals are placed on the cooler, one on the front and one on the back

5.3.4 Sample Documentation

The following documentation is associated with sample collection and transfer:

- Field Logbooks
- Site Logbooks
- Master Sample Log
- Sample Label
- Chain-of-Custody Form
  Custody Seals
  Shipping Airbill.

6.0 HEALTH AND SAFETY REQUIREMENTS

The site-specific Health and Safety Plan (HASP) is provided as a separate submittal. As required by paragraph 1.2.1, Pre- and Post-Construction documentation, the HASP includes organizational information, a potential hazards assessment, protective equipment requirements, air monitoring, site controls and protective zones, medical surveillance procedures, emergency response and spill control measures, and training requirements.

7.0 WASTE REMOVAL/REGULATORY COMPLIANCE

This section addresses how the various waste streams generated during the work at the Bilge Water Plant will be handled. These waste streams include excavated soils and miscellaneous debris and solid wastes.

7.1 MANIFESTS/SHIPPING PAPERS

Foster Wheeler Environmental shall provide completed waste manifests and/or bills of lading and transport documentation to the Navy for review and signature.

7.2 WASTE TRANSPORT AND DISPOSAL

Foster Wheeler Environmental shall subcontract for waste transport and disposal (T&D) services. The T&D subcontractor shall be competitively procured from the five firms with which Foster Wheeler Environmental has pre-placed basic ordering agreements. This assures the Navy that solid and/or hazardous wastes will be sent to an EPA NJDEP-approved facilities. All disposal facilities transporters to be used for disposal of the Navy's wastes, will be evaluated for regulatory compliance and approved for use in accordance with Foster Wheeler Corporation Regulatory Compliance Procedures. Approved facilities and transporters will be submitted to the Navy for final approval.

7.3 SOLID WASTES

All non-hazardous solid wastes generated on-site will be disposed or recycled in accordance with NJ Solid Waste Regulations. All solid wastes will be recycled at a NJ permitted recycling facility or disposed at a solid waste facility.

7.4 SOILS

Soils will be excavated as part of the basin construction, regrading and piping installation. These soils will be stock-piled and sampled in accordance to Table 5-1 for reuse on site as clean fill, or off-site transportation and disposal. The excavated soils are not expected to be hazardous, and will probably be used as fill on site.

8.0 PROJECT MANAGEMENT

The project management team shall be responsible for all technical and administrative aspects of the remediation project.

8.1 PROJECT SCHEDULE

The project schedule is provided as Figure 8-1.

Act ID	Description	Orig Dur	Rem Dur	Early Start	Early Finish
1000	Submit Draft Work Plan	1d	0	26FEB99 A	26FEB99 A
1010	Submit Draft Health and Safety Plan	1d	0	19FEB99 A	19FEB99 A
1040	Submit Sediment Erosion Control Plan	1d	0	16MAR99 A	16MAR99 A
1050	Respond to Comments and Submit Final	1d	0	25MAR99 A	04MAY99 A
1070	Procurement of Equipment	1d	0	05MAR99 A	21MAY99 A
1080	Mobilize to the Site	1d	0	03MAY99 A	07MAY99 A
1090	Replace Transfer Piping	1d	0	10MAY99 A	14MAY99 A
1100	Install Railroad Spill Pans	1d	0	17MAY99 A	26MAY99 A
1110	Install Spill Containment Piping	1d	0	20MAY99 A	03JUN99 A
1120	Install Concrete Sump and Valving	1d	0	04JUN99 A	09JUN99 A
1130	Earth Work and Paving	1d	0	14JUN99 A	18JUN99 A
1140	Sealing of Pavement and Concrete	1d	0	21JUN99 A	24JUN99 A
1150	System Start-Up	1d	0	28JUN99 A	29JUN99 A
1160	Submit Electrical Schematics	1d	0	25MAY99 A	27MAY99 A
1170	Submit Addendum to DPCC Plan	1d	0	07JUN99 A	09JUN99 A
1180		1d	1d	21NOV97	21NOV97

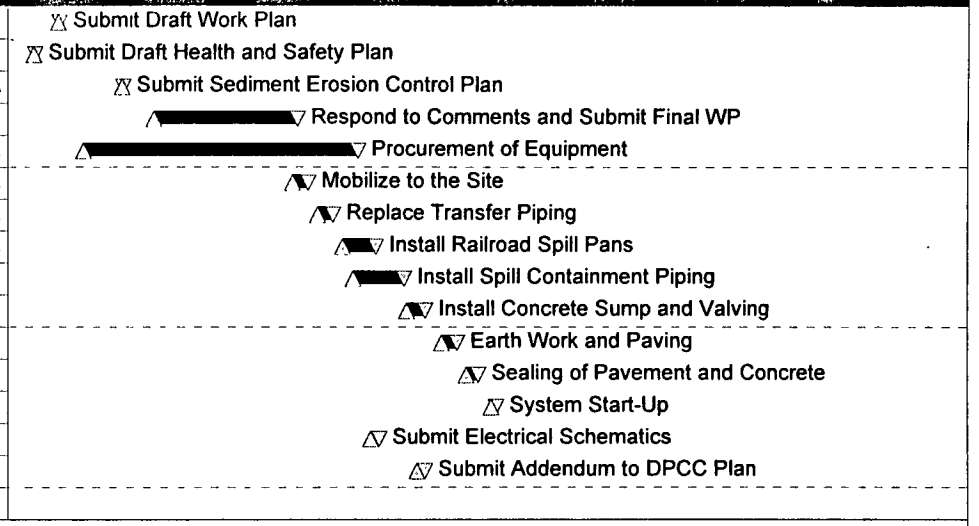

- Early start point
- Early finish point
- Early bar
- Late finish point
- Total float bar
- Progress bar
- Critical bar
- Summary bar
- Progress point
- Critical point
- Summary point
- Start milestone point
- Finish milestone point

FIGURE 8-1
NWS-EARLE
BILGE WATER PLANT SCEHDEDULE OF ACTIVITIES

Date	Revision	Checked	Approved
05APR99	01	MH	
05APR99			

8.2 PROJECT STAFFING PLAN

The organization chart for this project is provided in Figure 8-2.

8.3 MEETINGS

8.3.1 Pre-Construction Meeting

Prior to mobilization, the Project Superintendent shall conduct a pre-construction meeting in the ROICC office. The date and time of the pre-construction meeting shall be approved by the ROICC NTR.

8.3.2 Daily Safety Meetings

Prior to the starting work, a daily safety meeting will be conducted by the Foster Wheeler Environmental Health and Safety Officer. All of the day's planned activities will be reviewed with particular attention focused on PPE and risk. All personnel are required to attend the meeting.

9.0 QUALITY ASSURANCE/QUALITY CONTROL

The Quality Assurance/Quality Control (QA/QC) section describes the organization, inspections, tests, procedures, and documentation necessary to produce a completed project which complies with the governing regulations and the technical statement of work.

9.1 ORGANIZATION AND RESPONSIBILITIES

The project team will include the following personnel:

The Senior Project Engineer/Manager (SPEM) has final responsibility for the development of the Work Plan and management of the project team.

The Project Superintendent (PS) is responsible for assuring that all the work is conducted in accordance with the Work Plan. In addition, the PS is responsible for coordinating with the subcontracts for execution of all of the on-site work.

The Site Health and Safety Officer (SHSO) is responsible for the safety of all site personnel as detailed in the site-specific Health and Safety Plan (HASP), presented under separate cover.

Foster Wheeler Environmental will direct and maintain responsibility for the overall QA/QC program and will manage subcontractors in a manner to maintain project

Figure 8-2
Navy / FWENC Organizati n Chart

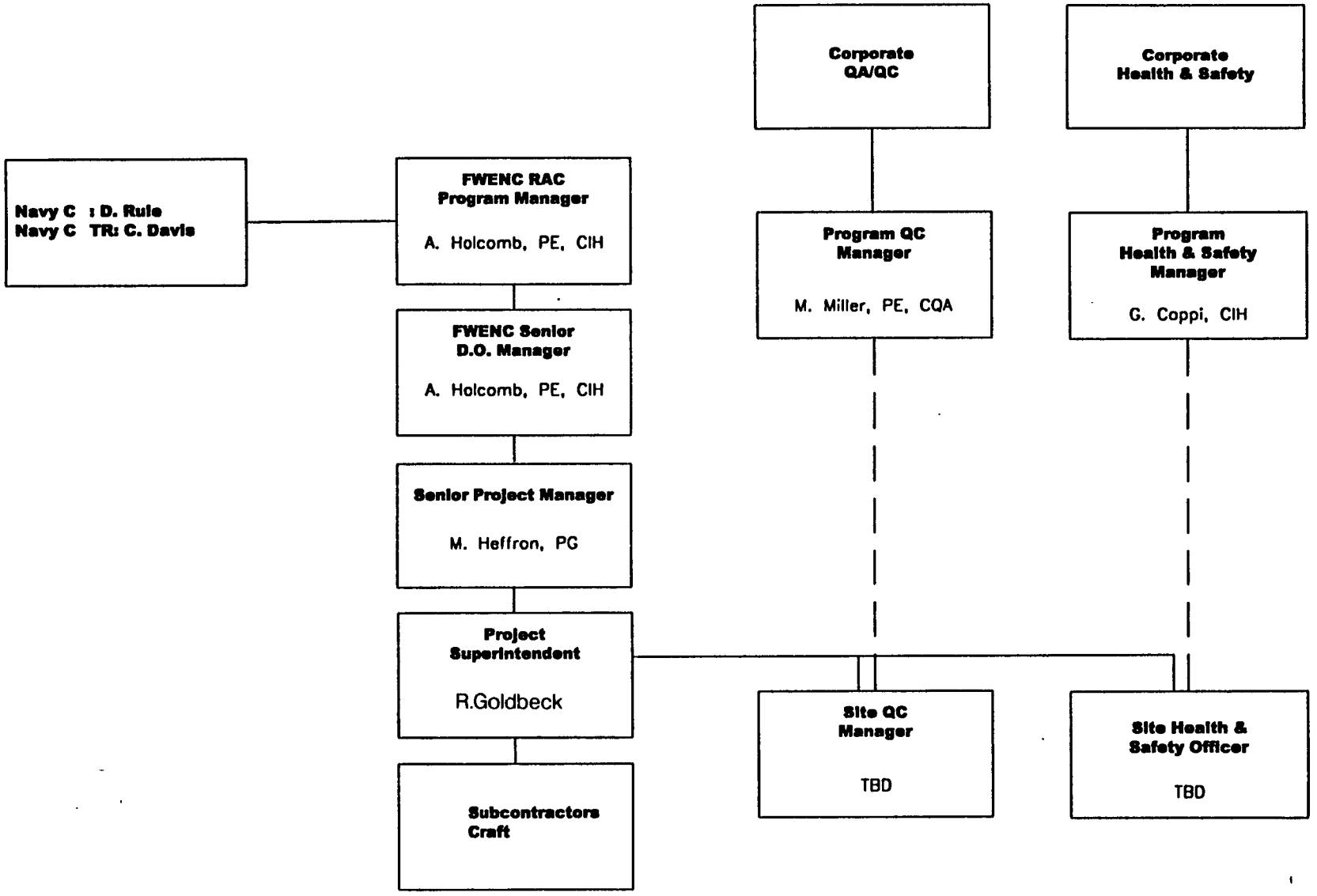

navyrac\nhorgl

requirements. Subcontractors shall be used for pipe installation training, laboratory analyses, and survey work.

9.2 QA/QC FIELD AUDITS

Quality assurance and quality control during the installation of the railroad pans, piping, sump installation and grading and paving will be performed by the Foster Wheeler Environmental Project Superintendent (PS). The PS will supervise all operations and subcontractors to ensure that all activities are being performed in accordance with the approved Work Plan. The PS will report all findings to the Project Manager (PM).

Additional quality assurance will be provided by spot checks made by the designing engineer to ensure all piping and sump placements are in accordance to the design drawings.

The manufacturer of the dual containment piping systems shall train on-site personnel on the installation of the piping and do periodic checks to ensure the proper fusion methods are being employed for the piping.

9.3 FIELD CHANGES AND CORRECTIVE ACTIONS

The SPEM or his designee is responsible for all site activities. In this role, the SPEM is required at times to adjust the field program to accommodate site-specific needs. When it becomes necessary to modify a program, the responsible personnel will notify the SPEM of the anticipated changes prior to implementation. Changes will only be acted upon with the SPEM's concurrence. The SPEM will consult with the Navy Technical Representative (NTR) ahead of time for major changes and receive his/her approval. If changes are implemented that are subsequently determined to be unacceptable, the actions taken during the period of deviation will be evaluated to determine the significance of any departure from established program practices.

The changes in the program will be documented on a Change Request Form (CRF), which will be signed by the PS and the SPEM. A typical CRF Form used to document field changes is provided as Figure 9-1. The CRFs for each change will be numbered sequentially starting with the number "01." The SPEM is responsible for controlling, tracking, and implementing the identified changes.

9.4 SUBMITTALS

The Submittal List for this project is provided as Figure 9-2.

FIGURE 9-1

Foster Wheeler Environmental Corporation
Change Request Form

Section 1 thru 4 to be filled out by Foster Wheeler, Section 5 to be filled out by Navy

PROJECT: **NWS-Earle: Bilge Water Plant**	OFS.No. **1284 0034**	Change Request Form: **CRF- 001** **Rev. 0**

To: Mr. S. Lehman Dept. NorthDiv. Location: _____ Date:

Re: ☐ Drawing No. _____ Title _____

☐ Spec. No. _____ Title _____

☐ Other Work Plan

1. DESCRIPTION (*Items involved, submit sketch if applicable*)

2. REASONS FOR CHANGE (*If from disposition of nonconformance report, list report number*):

3. RECOMMENDED DISPOSITION

☐ Technical Direction (Minor Scope Shift-<10%/50k) [COTR/NR approval required]

☐ Technical Direction (Major Scope shift->10%/50k) [CO approval required]

☐ ROM Estimate _____

☐ Cost Growth

☐ Out of Scope(Minor-<10%/50k) [CO approval required]

☐ Out of Scope (Major->10%/50k) [CO approval required]

☐ Schedule Impact _____

See attached Breakdown

Initiator Signature:

4. Resident Engineer (Signature)	Date	Project Superintendent Concurrence (Signature)	Date

5. Disposition

☐ Approved per recommended disposition

☐ Not approved (give reason)

☐ Approved with modification(s) [describe below]

Project Manager (*Signature*)	Date	ROICC Approval (*Signature*)	Date
Contracting Officer Technical Representative Approval (*Signature*)(as required)		Contracting Officer Approval (*Signature*)	Date

Engineer signs and transmits to Resident Engineer with copies to:

_____ Project Manager

_____ Project Superintendent

Others as Required _____

File: _____

p:\shared\forms\fcrform.doc

FIGURE 9-2
NAVAL WEAPONS STATION-EARLE
SUBMITTAL LIST FOR DO #34
BILGE WATER PLANT

Submittal #	Description	Submittal Date	Remarks
	Draft Health & Safety Plan	February 19, 1999	
	Draft Work Plan	February 26, 1999	
	Sediment Erosion Control Plan	March 9, 1999	
	Final Work Plan	April 6, 1999	
	Final Health & Safety Plan	April 6, 1999	
	Double-Walled Piping Spec Sheets (Appendix in Work Plan)	February 26, 1999	
	Railroad Spill Pan Spec. Sheets (Appendix in Work Plan)	February 26, 1999	
	Asphalt Coating Spec Sheets (Appendix in Work Plan)	February 26, 1999	
	Electrical Schematics	May 1999	Tentative: May 1999
	DPCC Plan	May 1999	Tentative: May 1999
	Piping Pressure Tests	June 1999	Tentative: June 1999
	Soil Compaction Tests	June 1999	Tentative: June 1999
	Pump Manufactures Catalog	June 1999	Tentative: June 1999
	As Built Drawings	July 1999	Tentative: July 1999

The Quality Control Manager is responsible for maintaining the submittal register and reviewing and certifying that submittals are in compliance with the contract requirements. All submittals will be accompanied by a transmittal form, which will identify the submittal and provide a unique tracking number.

9.5 TESTS AND INSPECTIONS

Foster Wheeler Environmental will perform preparatory, initial, and follow-up inspections tests and inspections in accordance to the specifications contained in Appendix C.

9.6 DOCUMENTATION

Documentation of operations, record keeping, photographic evidence of work performed, and as analytical results will be provided to the Navy in the Closure Report.

9.6.1 Operations Record keeping

All field inspection and testing activities will be documented in a project logbook. The project logbook will be maintained in accordance with the relevant Foster Wheeler Environmental Field Technical Guidelines. The Project Manager will maintain records of quality control operations and activities for subcontractors and suppliers.

9.6.2 Photographic Documentation

Still 35mm color photographs will be taken as needed to record work progress. At a minimum, photographs will be taken of the existing conditions before work begins, during the excavation activities and during the groundwater treatment and backfilling operations. Photograph location, date and description of the activity recorded will be entered in a photo documentation log. The photographs and log will be submitted with the Final Report

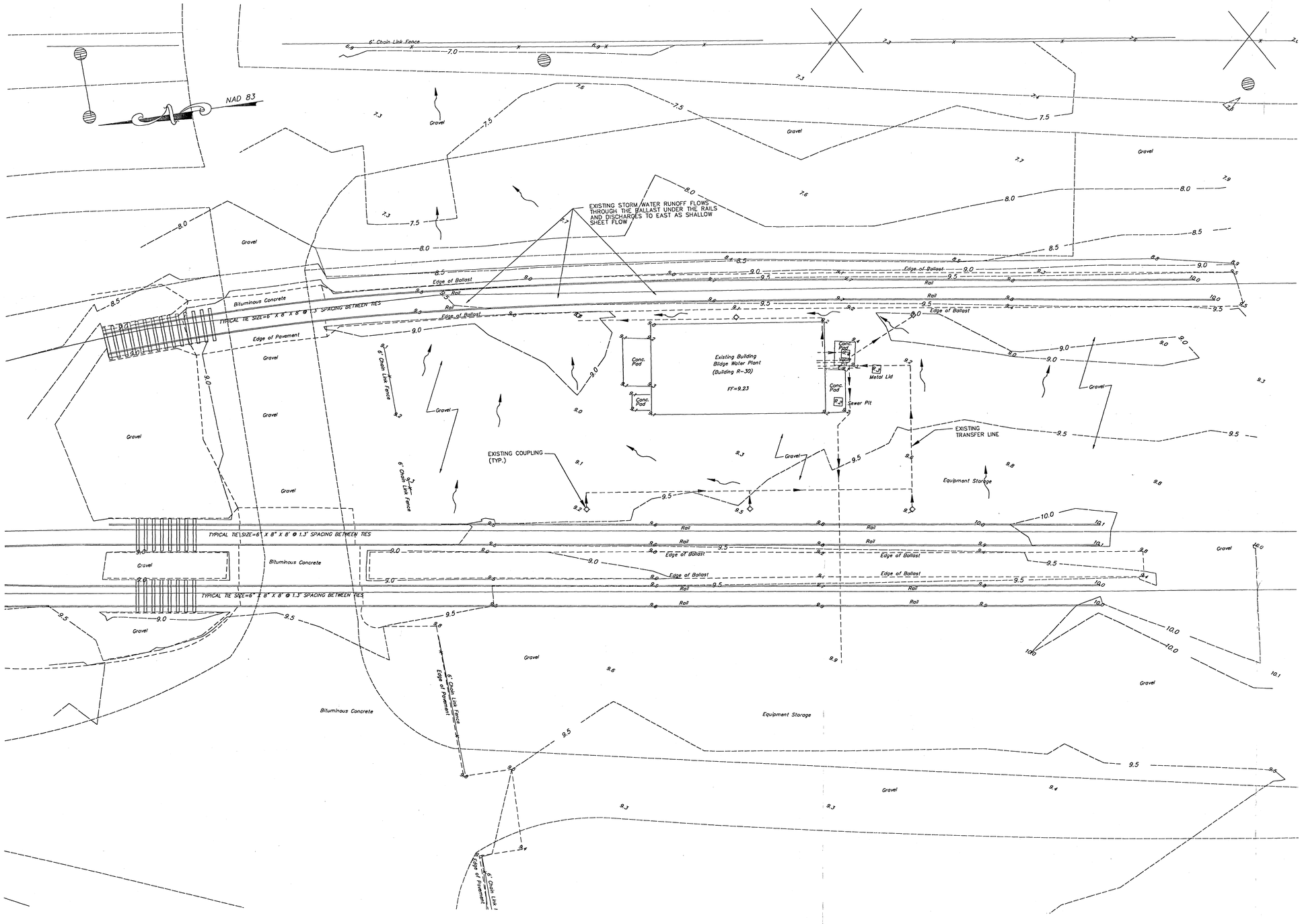

SURVEY NOTES:

HORIZONTAL DATUM IS BASED UPON NAD 83

VERTICAL DATUM IS BASED UPON NAD 88.
HORIZONTAL AND VERTICAL CONTROL ESTABLISHED USING GLOBAL POSTIONING METHODOLOGY UTILIZING N.G.S.MONUMENT THROCKMORTON 3 AS FIXED.

UTILITY LOCATIONS SHOWN HEREON ARE FROM ABOVE GROUND OBSERVATIONS THE TYPE AND LOCATION OF UNDERGROUND AND OTHER UTILITIES IS NOT GUARANTEED TO BE ACCURATE OR ALL-INCLUSIVE. THE USER OF THIS SURVEY IS RESPONSIBLE FOR MAKING HIS OWN DETERMINATIONS AS TO THE TYPE AND LOCATIONS OF UNDERGROUND AND OTHER UTILITIES AS MAY BE NECESSARY.

THE UNDERSIGNED IS NOT QUALIFIED TO MAKE ANY DETERMINATION OF THE EXISTENCE OR NON-EXISTENCE OF WETLANDS AND/OR CONTAMINATION AFFECTING THIS SURVEY. THEREFORE, NO STATEMENT IS BEING MADE OR IMPLIED NOR SHOULD IT BE CONSTRUED THAT ANY STATEMENT IS BEING MADE BY THE FACT THAT NO EVIDENCE OF WETLANDS OR CONTAMINATION IS SHOWN.

IF DIGITAL INFORMATION IS ALSO SUPPLIED, IT IS DONE SO FOR INFORMATIONAL PURPOSES, ONLY. THE ORIGINAL SIGNED AND SEALED DOCUMENT IS THE DOCUMENT OF RECORD.

IF THIS SURVEY DOES NOT CONTAIN THE RAISED SEAL OF THE SURVEYOR, IT IS AN UNAUTHORIZED REPRODUCTION OF THE SURVEY.

LEGEND:

- EXISTING SUBSURFACE TRANSFER LINE
- 90 EXISTING CONTOUR
- 9.2 EXISTING SPOT GRADE
- EXISTING FORCEMAIN TO MIDDLETOWN SEWAGE AUTHORITY
- EXISTING COLLECTION POINT
- EXISTING DRAINAGE SURFACE FLOW

0 10 20 30 40
SCALE IN FEET

FOSTER WHEELER ENVIRONMENTAL

DESIGN MGR.	DATE	CHK.	DATE
SUBMITTED BY:	(FWENI MEMBER)	CH ENG.	(TITLE)
NORTHDIV	DM:	HD:	DATE:
	PPC:	HP:	
		DIR:	
OFFICER IN CHARGE			DATE
APPROVED			

REV.	DESCRIPTION	PREP BY	DATE	APPRVD
0	ISSUED FOR NAVY REVIEW	MWJ	2/23/99	D.D

NAVAL FACILITIES ENGINEERING COMMAND
DEPARTMENT OF THE NAVY
NORTHERN DIVISION
LESTER PENNSYLVANIA
NAVAL CONSTRUCTION BATTALION CENTER: DAVISVILLE, RHODE ISLAND

NAVAL WEAPONS STATION EARLE
BILGE WATER PLANT
EXISTING CONDITIONS

NORTHDIV FOR COMMANDER, NAVFAC
APPROVED DATE

SEAL AREA

4/29/99

MICHAEL W. JUNGHANS
N.J.P.E. NO. 39877

CODE I.D. NO.	80091
SCALE : 1"=10'	
SPEC. NO. 04-	
CONSTRN. CONTR. NO. N62472-	
NAVFAC DRAWING NO.	
SHEET 1 OF 3	
SIZE: G	DIS. SH. NO. C-1

CAD FILE NAME; WF12198.DWG DATE: 2/23/99
PLOT SCALE: 1=1 TIME: 4:00 PM

33J364X

DATE CREATED
LATEST CHANGE
CHANGED BY

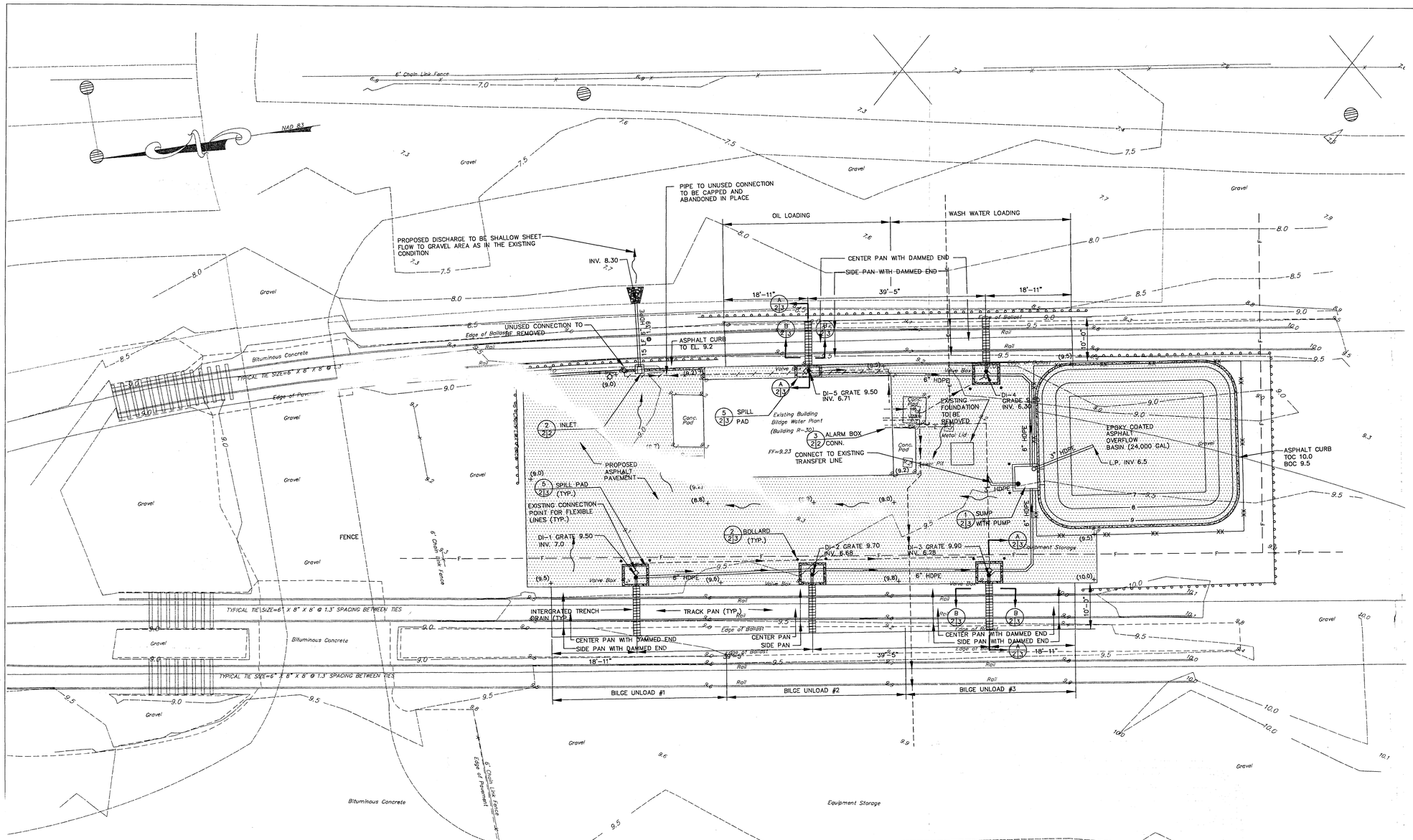

NOTES:

1. HORIZONTAL DATUM IS BASED UPON NAD 83
   VERTICAL DATUM IS BASED UPON NAD 88.
2. HORIZONTAL AND VERTICAL CONTROL ESTABLISHED USING GLOBAL POSITIONING METHODOLOGY UTILIZING N.J.G.S. MONUMENT THROCKMORTON 3 AS FIXED.
3. UTILITY LOCATIONS SHOWN ARE BASED ON ABOVE GROUND OBSERVATIONS THE TYPE AND LOCATION OF UNDERGROUND AND OTHER UTILITIES IS NOT GUARANTEED TO BE ACCURATE OR ALL-INCLUSIVE. THE CONTRACTOR IS RESPONSIBLE FOR MAKING DETERMINATIONS AS TO THE TYPE AND LOCATIONS OF UNDERGROUND AND OTHER UTILITIES AS MAY BE NECESSARY.
4. ALL EXISTING TRANSFER PIPING SHALL BE REPLACED IN THE SAME LOCATION WITH DOUBLE CONTAINMENT HDPE PIPING CONSISTING OF 3" INNER DIAMETER AND 6" OUTER DIAMETER PIPE.
5. ALL ASPHALT CURBS TO BE PAINTED YELLOW.
6. A LEAK DETECTION SENSOR CORD SHALL BE PROVIDED FOR DOUBLE CONTAINMENT TRANSFER PIPING FROM THE RAIL CARS TO THE TREATMENT BUILDING. THREE SENSOR CORDS SHALL BE INSTALLED: 1) TRANSFER MAIN FROM RAIL CAR BILGE UNLOADING AREAS TO BUILDING (ONE CORD IN MAIN MANIFOLD ORIGINATING AT DI-1) ; 2) OIL LOADING AREA TO BUILDING; AND 3) WASH WATER LOADING AREA TO BUILDING. THE LEAK DETECTION CORDS SHALL EXTEND TO THE ALARM BOX ON THE SOUTH WALL OF THE TREATMENT BUILDING ADJACENT TO THE PENETRATION AS SHOWN ON DETAIL 3, THIS SHEET. PROVIDED SENSOR CORD SHALL BE CAPABLE OF MAPPING LINEAR FEET TO DETECTED LEAK.
7. THE DOUBLE CONTAINMENT DRAINAGE PIPE SHALL CONSIST OF 6" INNER DIAMETER AND 10" OUTER DIAMETER PIPE.
8. THE LOADING AND OFF-LOADING PIPING STICK-UPS ABOVE GRADE SHALL BE WRAPPED WITH HEAT TRACE AND INSULATION.

LEGEND:

- PROPOSED SUBSURFACE SPILL CONTAINMENT LINE
- EXISTING SUBSURFACE TRANSFER LINE
- EXISTING TRANSFER LINE TO BE REMOVED
- 90 EXISTING CONTOUR
- 90 PROPOSED CONTOUR
- 9.2 EXISTING SPOT GRADE
- (9.0) PROPOSED SPOT GRADE
- 6" ASPHALT CURBING WITH YELLOW PAINTING
- PROPOSED ASPHALT PAVING (DETAIL 6, SHEET 3)
- EXISTING FORCEMAIN TO MIDDLETOWN SEWAGE AUTHORITY
- EXISTING CONNECTION POINT TO TRANSFER LINES
- PROPOSED DRAINAGE SURFACE FLOW
- SILT FENCE (DETAIL 1, SHEET 2)
- DETAIL/SECTION DESIGNATION
- DETAIL/SECTION SHEET LOCATION
- REFERENCE SHEET LOCATION
- —X— EXISTING FENCE
- —XX— PROPOSED 5' CHAIN LINK FENCE
- —E— EXISTING UNDERGROUND ELECTRIC LINE
- —F— ABANDONED FIRE MAIN

0 10 20 30 40
SCALE IN FEET

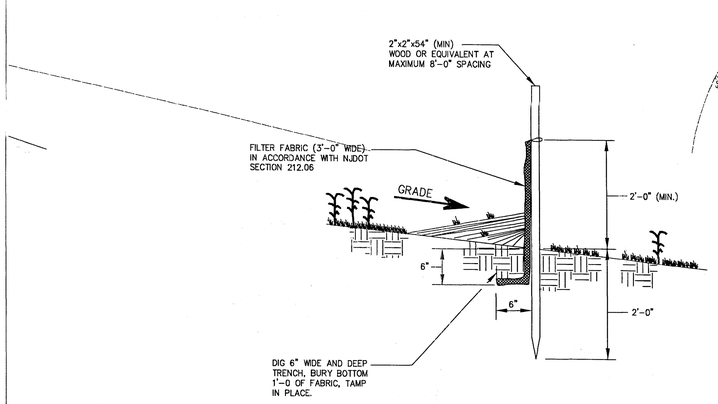

DETAIL 1/22 SILT FENCE
(NOT TO SCALE)

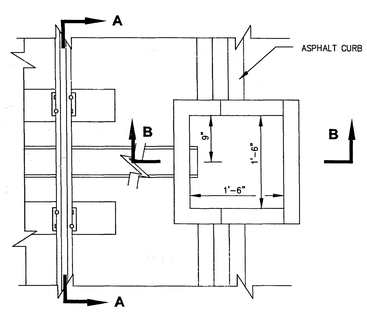

PLAN

DETAIL 2/22 INLET
(NOT TO SCALE)

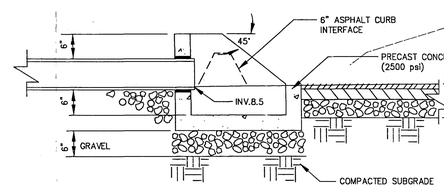

SECTION B-B

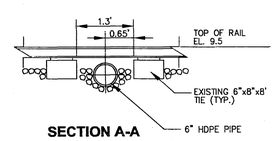

SECTION A-A

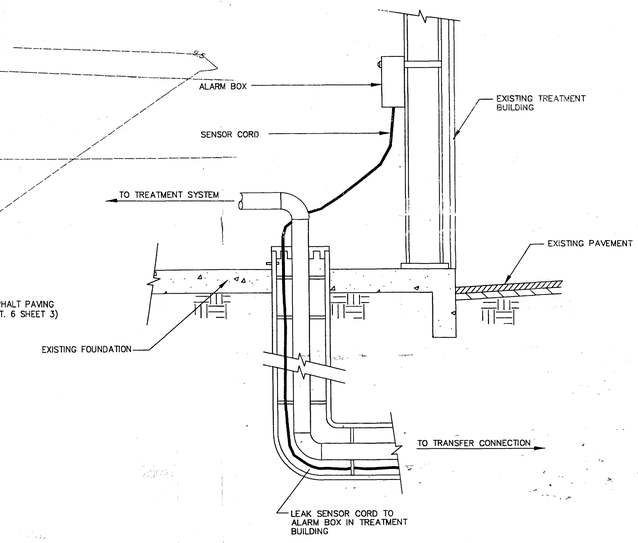

DETAIL 3/22 ALARM BOX CONN.
(NOT TO SCALE)

REV.	DESCRIPTION	PREP BY	DATE	APPRVD
0	ISSUED FOR NAVY REVIEW	M.W.J.	2/23/99	D.D.
1	REMOVED FUEL STATION	M.W.J.	3/5/99	D.D.
1	REVISED NOTATION	M.W.J.	4/29/99	D.D.

FOSTER WHEELER ENVIRONMENTAL
DSGN: M.W.J. DR: J.R. CHK: D.D.
SUPR: D.D. CH. ENG:
SUBMITTED BY: (FWENI MANAGER) (TITLE) (DATE)
NORTHDIV DM: HD: HD: DR: PPE:
OFFICER IN CHARGE DATE
APPROVED

NAVAL FACILITIES ENGINEERING COMMAND
NORTHERN DIVISION
PENNSYLVANIA
DAVISVILLE, RHODE ISLAND
NAVAL WEAPONS STATION EARLE
BILGE WATER PLANT
SITE PLAN
RAIL CAR SPILL CONTAINMENT
NORTHDIV FOR COMMANDER, NAVFAC
DEPARTMENT OF THE NAVY
LESTER NAVAL CONSTRUCTION BATTALION CENTER
APPROVED DATE

SEAL AREA

MICHAEL W. JUNGHANS
N.J.P.E. NO. 39877

CODE I.D. NO.	80091
SCALE : AS NOTED	
SPEC. NO. 04-	
CONSTRN. CONTR. NO. N62472-	
NAVFAC DRAWING NO.	
SHEET 2 OF 3	
SIZE: G	DIS. SH. NO. C-2

CAD FILE NAME: WF11398.DWG DATE: 4/29/99
PLOT SCALE: 1=1 TIME: 3:55 PM

DATE CREATED
LATEST CHANGE
CHANGED BY:

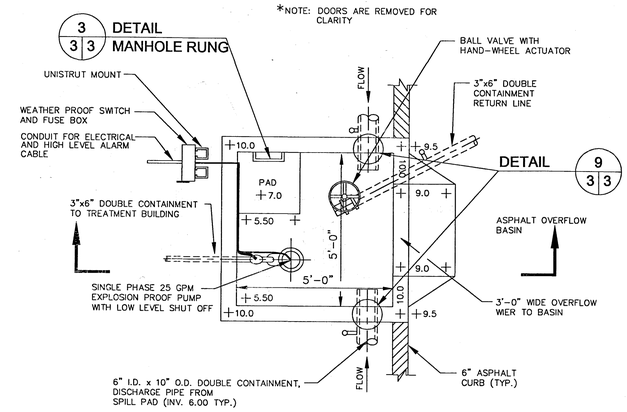

PLAN

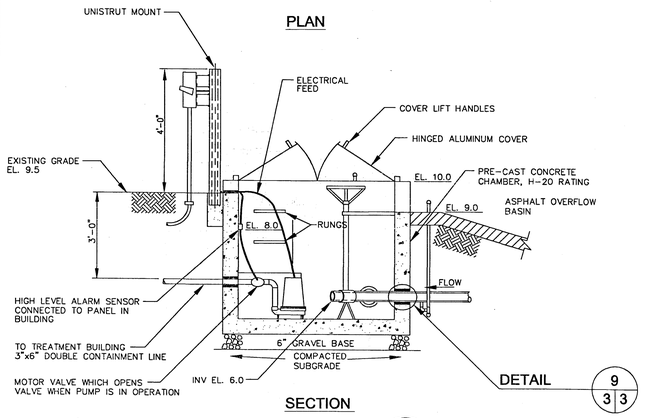

SECTION

DETAIL 1 | 2 3 SUMP
NOT TO SCALE

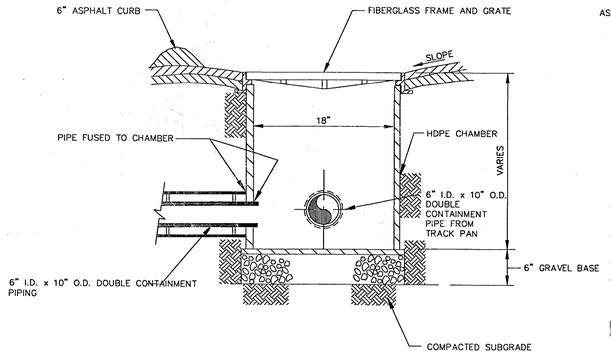

DETAIL 4 | 3 3 SPILL PAD CATCH BASIN
NOT TO SCALE

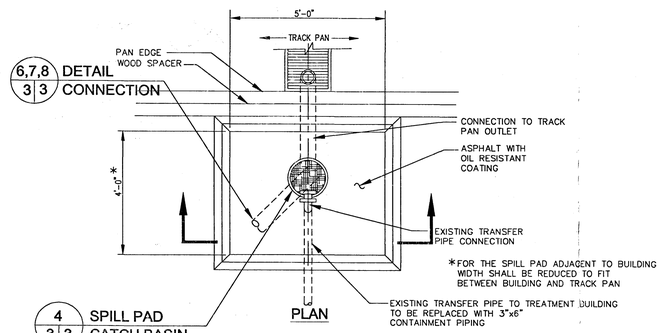

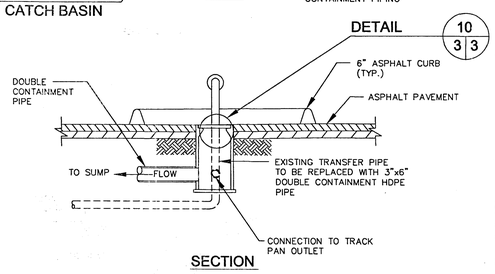

SECTION

DETAIL 5 | 2 3 SPILL PAD
NOT TO SCALE

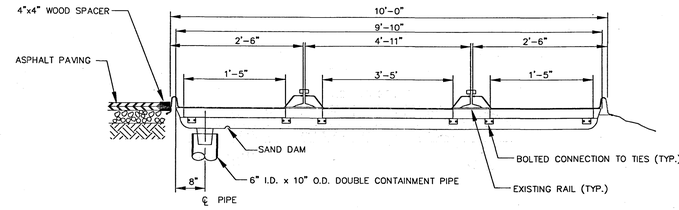

TYPICAL SECTION A | 2 3 FIBERGLASS TRACK PAN
NOT TO SCALE

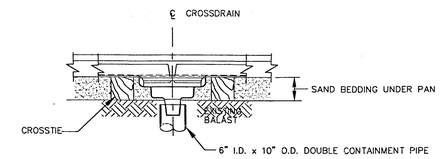

TYPICAL SECTION B | 2 3 FIBERGLASS TRACK PAN
NOT TO SCALE

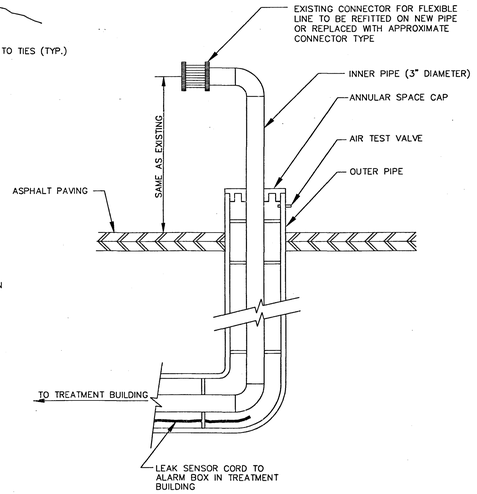

DETAIL 10 | 3 3 FLEXIBLE LINE CONNECTION
NOT TO SCALE

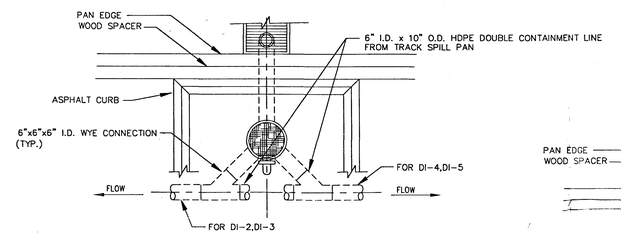

DETAIL 7 | 3 3 PIPE CONNECTION DI-2,DI-3,DI-4,DI-5
NOT TO SCALE

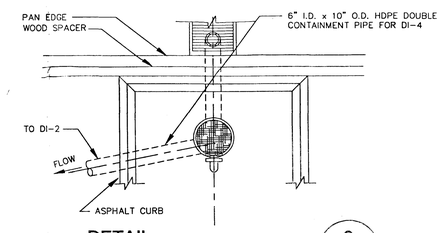

DETAIL 8 | 3 3 PIPE CONNECTION DI-1
NOT TO SCALE

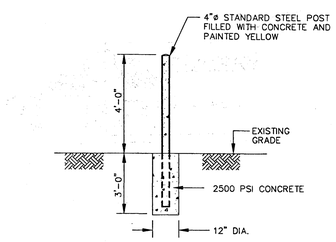

DETAIL 2 | 2 3 BOLLARD POST
NOT TO SCALE

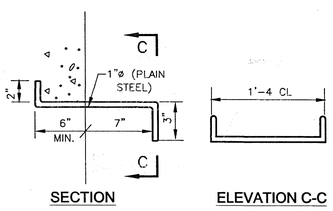

SECTION ELEVATION C-C

DETAIL 3 | 3 3 MANHOLE RUNG
NOT TO SCALE

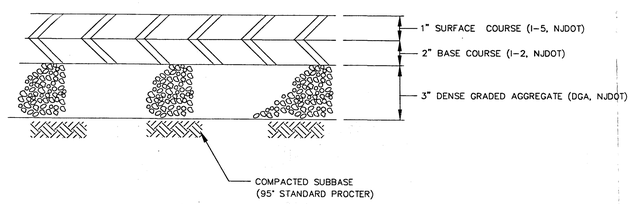

DETAIL 6 | 2 3 ASPHALT PAVEMENT
NOT TO SCALE

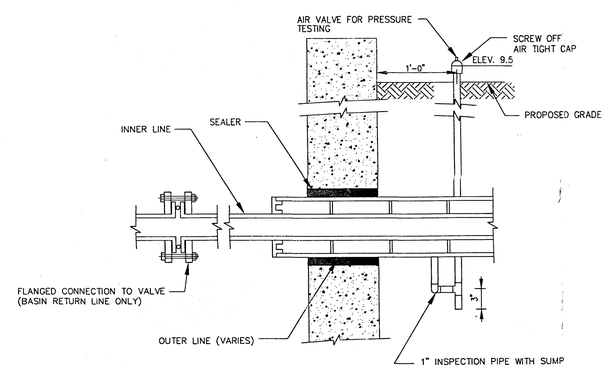

DETAIL 9 | 3 3 DOUBLE CONTAINMENT PIPE SUMP WELL PENETRATION
NOT TO SCALE

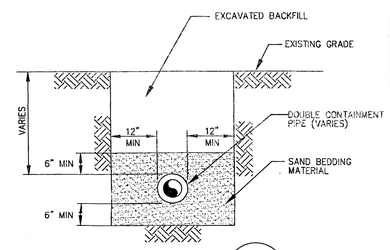

DETAIL 11 | 2 3 PIPE TRENCH
NOT TO SCALE

REV.	DESCRIPTION	PREP BY	DATE	APPRVD
0	ISSUED FOR NAVY REVIEW	M.W.J.	2/23/99	D.D.
1	REMOVED FUEL STSTAION DETAIL	M.W.J.	3/5/99	D.D.
2	REVISED NOTATION	MWJ	4/24/99	D.D.

FOSTER WHEELER ENVIRONMENTAL
DESIGN: M.W.J. DR: J.S. CHK: D.D.
SUPV: D.D. CH. ENG: (DATE)
SUBMITTED BY: (TITLE)
NORTHDIV Dia: HD: RD: FPC: DR:
OFFICER IN CHARGE
APPROVED DATE

NAVAL FACILITIES ENGINEERING COMMAND
PENNSYLVANIA
DAVISVILLE, RHODE ISLAND

DEPARTMENT OF THE NAVY
NORTHERN DIVISION
LESTER
NAVAL CONSTRUCTION BATTALION CENTER

NAVAL WEAPONS STATION EARLE
BILGE WATER PLANT
DETAILS AND SECTIONS
RAIL CAR SPILL CONTAINMENT

NORTHDIV FOR COMMANDER, NAVFAC
APPROVED DATE

SEAL AREA

MICHAEL W. JUNGHANS
N.J.P.E. NO. 39877

CODE I.D. NO.	80091
SCALE : AS NOTED	
SPEC. NO. 04-	
CONSTRN. CONTR. NO. N62472-	
NAVFAC DRAWING NO.	
SHEET 3 OF 3	
SIZE: G	DIS. SH. NO. C-3

CAD FILE NAME; WF111898.DWG DATE: 4/29/99
PLOT SCALE: .5=1' TIME: 3:50 PM

DATE CREATED
LATEST CHANGE
CHANGED BY:

SYNTECHNICS INC.

Track Collector Pan Systems

Installation Instructions

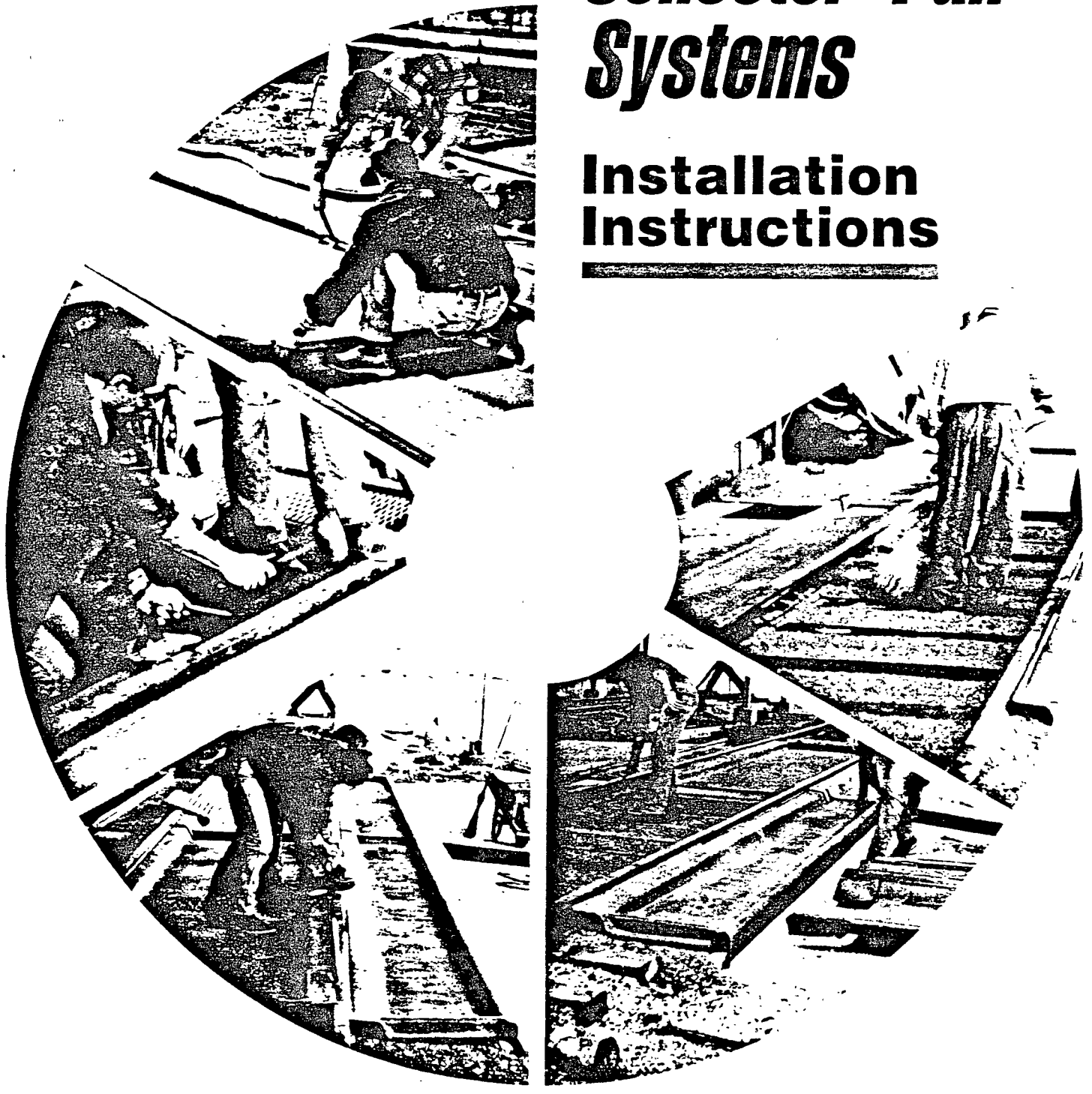

IMPORTANT

PLEASE READ THE ENTIRE INSTALLATION MANUAL BEFORE YOU BEGIN INSTALLING YOUR TRACK COLLECTOR PANS.

Your collector pan system is specifically designed for spill control and containment. ***It may be slippery when wet or dry.*** Walking on the pans may lead to falls and/or injuries. We recommend that the pans ***not*** be used as a walkway. The collector pan surface contains a surface resin layer which is the primary chemical barrier. If it is scratched or gouged, the chemical resistance property of the laminate may be reduced. Touch-up kits are available on request at a minimal charge.

Component Description

1. Center Pan - Standard lengths 19'9" and 39'5" from center line of the crossdrains.
2. Side Pan - Standard length 19'9" and 39'5" from center line of the crossdrains. Standard widths, 2'6", 3'6", 4'6".
3. Crossdrain - Standard sizes for system widths of 10', 12' and 14'. Tapered spout interfaces with drainage line.
4. Combination drain cover/crosswalk, FRP or galvanized safety grating.
5. Crossdrain support angles and lag screws.
6. Crossties
7. Ballast
8. Pea Gravel (1/2" dia. nominal)
9. End dams - Center and side end dam close off the end of the system.

If walking on the pans is necessary, or if crossing the system can not be done on the gratings at the crossdrains, an integral non-skid surface or a special grating system can be recommended by our sales department. The special grating will protect the

Component

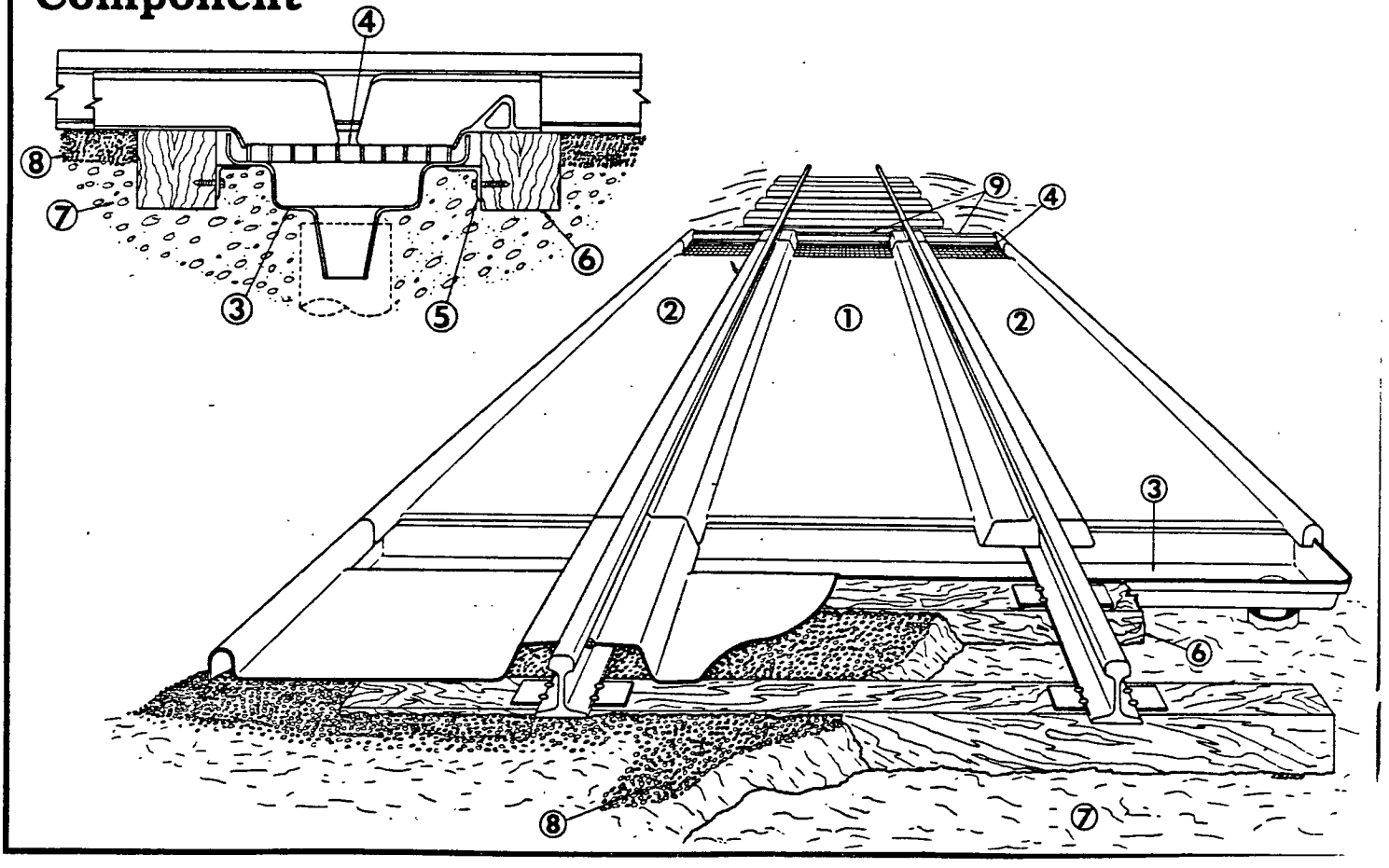

chemical barrier on the pans and provide a non-skid walking surface. These gratings are especially recommended at loading/unloading stations where hose connections cannot be made to the tank car without crossing the side pans. You may wish to put additional cautionary signs at high traffic areas.

Employees should be cautioned about the slipperiness of collector pans, and they should be instructed in proper use and maintenance. It is important that any material collected by the pans be removed promptly.

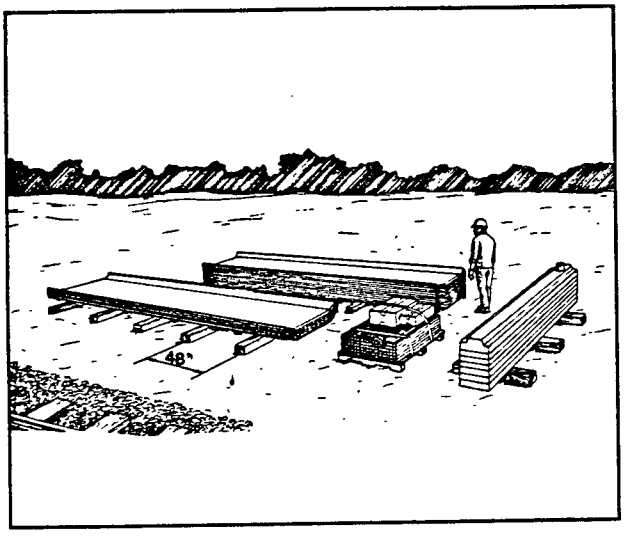

Storage and Inspection

Inspect your shipment carefully for any missing or damaged items. Store all your fiberglass pans on level, dry ground evenly supported every four feet using wood shoring. Care should be taken not to scratch the pan surface during handling. Do not store any other objects on top of the pans.

Tools and Equipment

To install your Track Collector Pan System, the following tools are needed:

ITEM	USAGE
1. 1/2" heavy-duty drill and 5/16" drill bit.	Drilling holes in crossties.
2. 3/4" socket and rachet.	Installing crossdrain supports.
3. Shovels and rakes.	Grade work.
4. Large flat pry bars - (2) required.	Installing or removing center pans.
5. Chain saw.	Cutting crossties.
6. Reciprocating saw with carbide blade.	Cutting out for rail splice joints.
7. Tamping tool.	Used for packing pea gravel.

Note: These are only the tools necessary to install FRP Collector Pans. You will need other special tools and equipment for the installation of your plumbing and retention system.

Site Inspection

Inspect your railroad site before installing the Track Collector Pans. Replace broken non-level or rotted ties and evaluate the straightness and condition of your rail. Make all necessary repairs before starting your installation. If rail reconstruction is required, welding all rail splice joints where the pans will be installed is recommended.

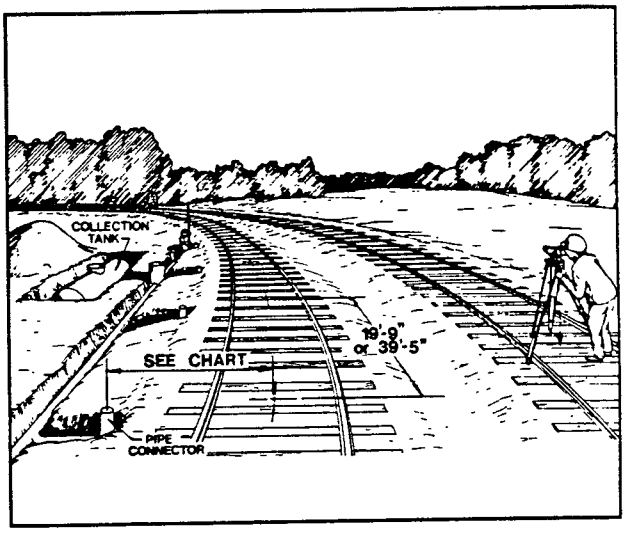

PIPE CONNECTOR CHART	
TYPE I	12'-0" WIDE = 61-1/4"
TYPE II & III	10'-0" WIDE = 51" 12'-0" WIDE = 63" 14'-0" WIDE = 75"

Piping System Layout and Installation

The piping system design, layout and installation must be completed before crossdrains and pans can be installed.

Your piping system should be designed so it will hook up to the standard **SynTechni s** crossdrain tapered spout using 6" to 8" pipe. The position of the pipe connector will depend on the length and width of the system you are using. See the drawing and chart above for proper pipe connector locations. The final connection between main drain pipe and crossdrain spout should be made after crossdrain installation. For special curved installations contact **SynTechni s'** Sales Department.

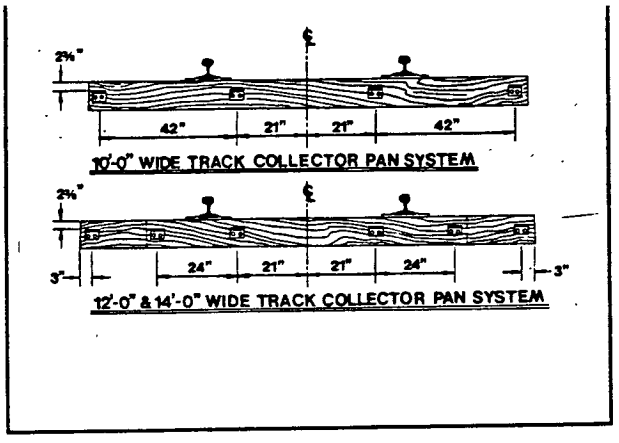

Angle Clip and Crossdrain Installation

SynTe hnics recommends two long crossties be installed along side each crossdrain for support. The ties should be cut 6" shorter than the crossdrain. Locate the proper position of the crossdrains on your site. Dig out and remove the two ties in that area. Angle clips have been furnished to support the crossdrain under the rails.

Before positioning the two new support ties, attach the angle clips using the 1/2" lag screws. The number of angle clips used will depend on the width of your collector pan system. The angle clips are spaced along the length of the tie and should measure 2-3/8" down from the top of the tie.

Slide the two support ties into position under the rails. The support ties should be spaced 23-1/2" apart, with the pipe connector in the middle. Re-spike the support ties to the rails, slide the crossdrain under the rails resting on the support angles. Center the crossdrain.

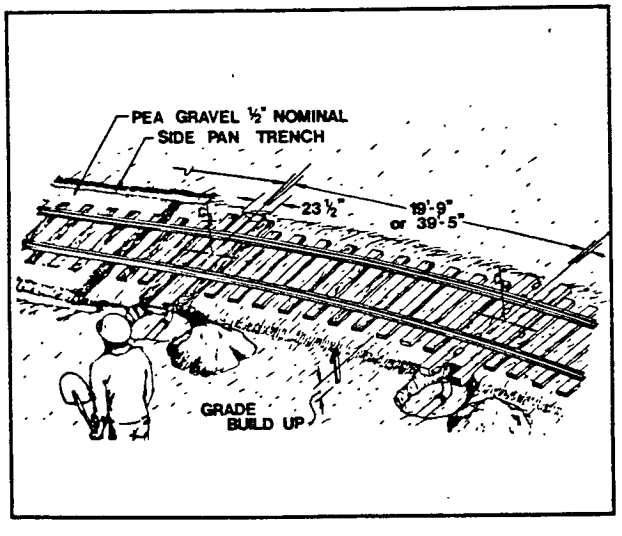

Grade Work

Remove existing ballast (if necessary) to 3" below the top of crossties. Install pea gravel between crossties and to both sides of the rails.

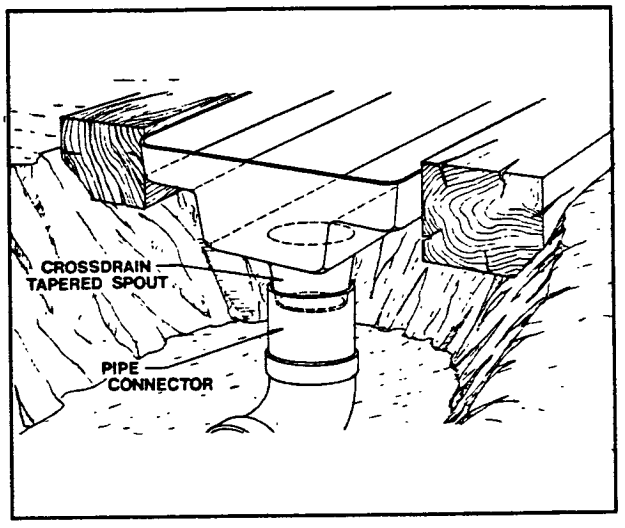

Pipe Connection

Connect the crossdrain spout to the pipe connector. Back fill pipe trench and around ends of crossdrains using pea gravel to top level of crossties.

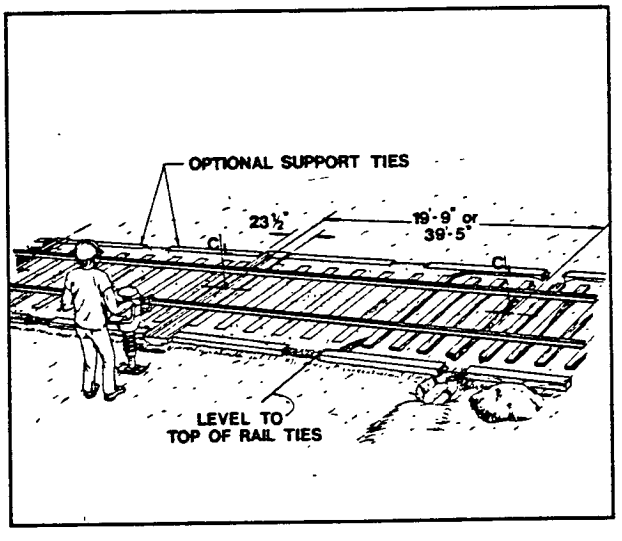

Optional Side Pan Support Ties

For installations where the roadbed is built up, an optional side pan support tie should be considered to hold the side pan grade in place. Position ties parallel to the rail 6 inches inboard from outside of pan system and at the same level as the crossties. Back fill and tamp pea gravel to top of ties.

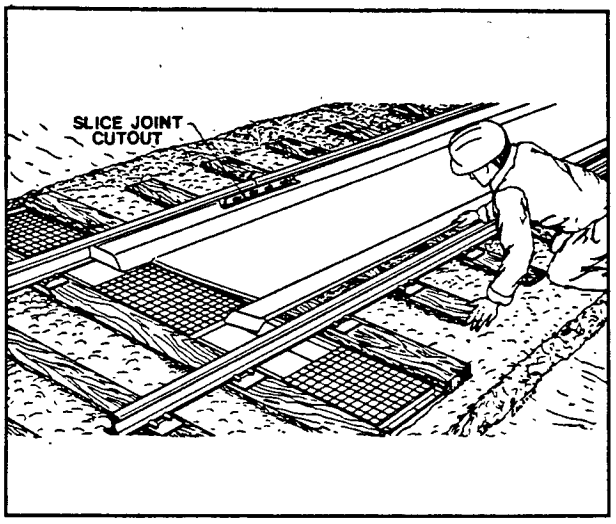

Center Pan Installation

Measure for splice joint cut out by positioning one side of the center pan under the rail bulb and the end lip of the pan over the edge of the crossdrain. Mark the position of the splice joint. Cut out the area using a reciprocating saw and carbide blade. *Make all splice joint cuts before installing pans, and seal cut edges with resin coat.* Contact **SynTechnics** Sales Dept. for more information.

Sweep off and remove ALL debris from top of crossties. Position one edge of center pan under the rail bulb with end lips over the edge of crossdrains. Gently snap the opposite side of the pan under the rail bulb. Use a pry bar to start the pan under the bulb. Care should be taken to keep from cracking the pan.

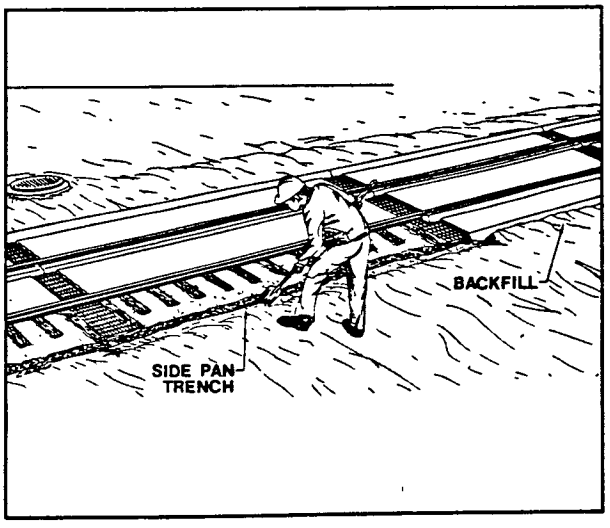

Side Pan Installation

Use the same procedure for splice joint cut out. Dig a 6" deep trench along outside of pan system. Sweep ALL debris from top of crossties. Slide the pan up against the rail and position the ends over the crossdrain overlapping the side pan connector if used. Place the curb leg down into the trench. The pan should be resting entirely on the ties and pea gravel bed. Back fill the trench to 3" below the top of side pan curb.

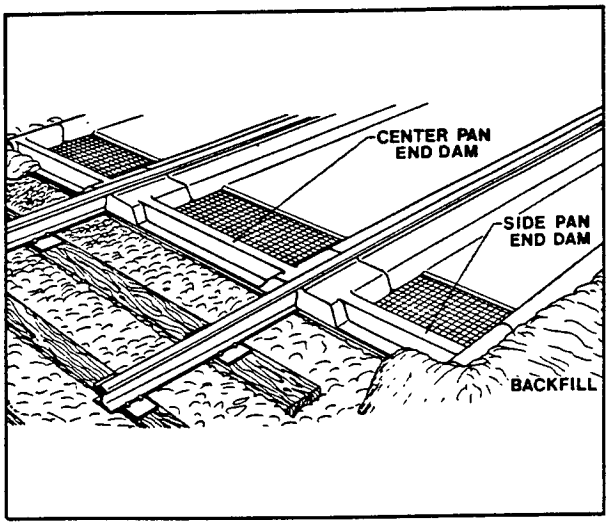

End Dam Installation

The center end dam is positioned with the lip extending down into the crossdrain between the rail. Attach center end dam to support tie using two 1/2" lag screws. The side pan end dams are positioned with the lip extending down into the crossdrain and the curb placed against the side pan curb.

Back fill against curb to 3" below the top.

Your system is now complete. Clean all construction debris from the top surface of the pans and remove any debris from the crossdrains. Care should be taken not to scratch the surface of the pans.

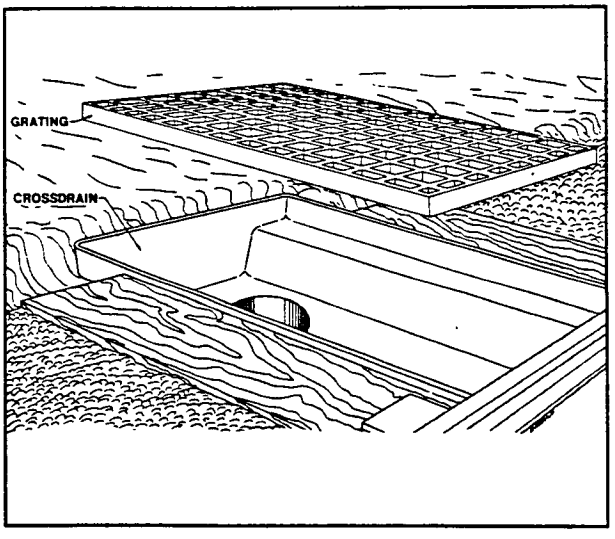

Grating Installation

Type I:
Position the side pan connector leg down into the end of the crossdrain. Support the connector by back filling with pea gravel. Slide the two end gratings under the rail and against the connector. Position the center grate between the end gratings.

Type II & III:
Type II & III systems are designed to, when properly installed, provide a barrier which actually holds the grating in its place. Simply place the appropriate grating in the space provided. Refer to drawings for correct placement.

Installation Information

Installation Time Estimates for Type II, III, IV & V

With six different types, two different lengths and four different widths, it would be very difficult to give someone a installation time that would be no more than a "shot in the dark". However, after talking with several contractors who have installed our pans in different locations and environments, we believe the following installation estimates are quite reliable for the **Type II and III** collector pan systems:

1.	20' center pan with two side pans	6 man hours
2.	40' center pan with two side pans	10 man hours
3.	10', 12', 14', or 16', crossdrain	12 man hours

If a 3'6", 4'6", or 5'6" side pan is used, 1 man hour should be added to items 1 and 2 above. This is to allow for the installation of the side pan support tie often required with these wider systems.

If the **Type IV and V** systems are utilized the following estimates can be used:

1.	20' center pan with two side pans	7 man hours
2.	40' center pan combination with side pans	12 man hours
3.	10', 12', or 14', crossdrain	12 man hours

As above, 1 man hour should be added to items 1 and 2 for the wider width systems.

These figures do include normal excavation time and ample time for mounting of hardware on cross ties.

Figures for curved systems will be slightly higher, but nothing tremendous because the curved systems are "tailor made" with no field work required.

Please understand that these are ESTIMATES only. These are installation figures that we have been able to compile from talking with people involved with installing SynTechnics track collector pans in different locations.

Installation Time Estimates for Standard Posi-Drain

20' STYLE
Crew of 4 people

1.	General grade work, removing excess ballast/add ballast	1.5 man hours
2.	Dig out between tie for Posi-Pipe and move ties accordingly, install Posi-Pipe	3 man hours
3.	Install center pan-attach FRP flashing	3 man hours
4.	Connect Posi-Pipe to center pan	1 man hour
5.	Install side pan on side	2 man hours
6.	Connect Posi-Pipe to side pan	1 man hour
7.	Connect Posi-Pipe to main drain	1 man hour
8.	Install side pan on other side	2 man hours
9.	Connect Posi-Pipe to other side pan	1 man hour
10.	Backfill against side pans (both sides)	.5 man hour
	20' of system	16 Man Hours

Installation Time Estimates for Standard Posi-Drain (cont.)

40' STYLE
Crew of 5 people

1.	General grade work, removing excess ballast/add ballast	2.5 man hours
2.	Dig out between tie for Posi-Pipe and move ties accordingly, install Posi-Pipe	3 man hours
3.	Install center pan-attach FRP flashing	3.5 man hours
4.	Connect Posi-Pipe to center pan	1 man hour
5.	Install side pan on one side	2.5 man hours
6.	Connect Posi-Pipe to side pan	1 man hour
7.	Connect Posi-Pipe to main drain	1 man hour
8.	Install side pan on other side	2.5 man hours
9.	Connect Posi-Pipe to other side pan	1 man hour
10.	Backfill against side pans (both sides)	1 man hour
	40' of system	19 Man Hours

Installation Time Estimates for Open-Access Posi-Drain

40' STYLE
Crew of 5 people

1.	General grade work, removing excess ballast/add ballast	2.5 man hours
2.	Dig out between tie for Open-Access crossdrain and remove ties accordingly, install Open-Access crossdrain	4 man hours
3.	Install center pan-attach FRP flashing	3.5 man hours
4.	Connect crossdrain to center pan	1.5 man hours
5.	Install side pan on one side	1.5 man hours
6.	Connect crossdrain to first side pan	1.5 man hours
7.	Connect crossdrain to main drain	1 man hour
8.	Install side pan on other side	3.5 man hours
9.	Connect crossdrain to other side pan	1.5 man hours
10.	backfill against side pans (both sides)	1 man hour
	40' of system	21.5 Man Hours

Standard & Open Access Posi-Drain Instructions

At the publication of this book, no printed installation manual for the Standard & Open-Access systems had been completed. Therefore, for certain steps in the installation process of these pans, you will be referred to our standard installation manual and/or general arrangement drawings.

Site Inspection

Inspect your railroad site before installing the Track Collector Pans. Replace broken non-level or rotted ties and evaluate the straightness and condition of your rail. Make all necessary repairs before starting your installation. If rail reconstruction is required, welding all rail splice joints where the pans will be installed is recommended.

Piping System Layout and Installation

The piping system design, layout and installation must be completed before crossdrain and pans can be installed when utilizing a bottom connection to the "Posi-Pipe". The prior layout for side connections to the Posi-Drain system is optional.

The piping system should be designed so it will hook up to the standard 4" pipe fitting. The position of the pipe connector will depend on the length and width of the system you are using. See the general arrangement drawings for proper connecting pipe locations. The final connection between main drain pipe and "Posi-Pipe" coupling should be made after center pan installation. For special curved installation contact our sales office at (502) 898-7303.

"Posi-Pipes" Installation

The "Posi-Pipe" connects the center pan and both side pans to the main drain pipe. Locate the area between the ties where the "Posi-Pipe" will be located. Dig out and remove the ballast between the tie and move ties as necessary to allow the "Posi-Pipe" to center on the drain connection. Dig out ballast 10" below the bottom of the rail.

Slide the "Posi-Pipe" under the rail "hole side up" and position the center line of the hole (4" hole Standard Posi-Drain® or 33" X 10" hole Open-Access Posi-Drain®) on center line between the rails. Do not fill in under or around the "Posi-Pipe". It must be allowed to hang free from the under side of the pans. Make sure the "Posi-Pipe" is perpendicular to the rail, and that the center line of the first "Posi-

Pipe" to center line of the next "Posi-Pipe" spacing agrees with the general arrangement drawings.

Center Pan Installation

The center pan has a factory edge and a flashing edge. The factory edge fits against the rail on the drain connection side (see general arrangement drawings).

Measure for splice joint cut out by positioning one side of the center pan under the rail bulb and line up the center line of the (4" hole for Standard Posi-Drain or 33" X 10" hole for Open-Access Posi-Drain®) over the hole on the "Posi-Pipe". Insure drain spacing is correct, then mark and trim the position of the rail splice joint cut outs before installing the center pan. Seal all cut edges with resin coat.

IMPORTANT: Sweep off and remove all debris from the top of cross ties. Bring the ballast up to the top of the elevation with pea gravel or walkway ballast.

Position the factory edge of the center pan against the under side of the rail bulb. The center pan should freely lay into position and rest on the cross ties. Center the drain hole on the pan over the drain hole on the "Posi-Pipe". Install gasket and/or silicone on the "Posi-Pipe" around the drain hole. Lift the "Posi-Pipe" up against the bottom of the drain reservoir and install the "C" clamps. Drill the 5/16" holes through the "Posi-Pipe" and install the 5/16" bolts, washers, and nuts. The flat washer should be installed on the top and bottom. Install nut on bottom side and tighten all bolts.

Flashing Installation

A 3-1/2" wide FRP flashing is provided for each center pan. Using a flat bar, pry the center pan over tightly against the rail making contact with the factory edge. Apply a 1/4" wide bead of silicone (provided by others) on top of the flashing side of the center pan (the 5" beveled edge opposite the factory edge) approximately 1" from the edge. Place the 3-1/2" wide flashing into the silicone and tightly against the under side of the rail bulb. Secure the flashing with the self drilling screws on 16" centers for the length of the flashing.

Use the electric screw driver to install the screws. See general arrangement drawings for more detail. Your center pan should now be installed. IMPORTANT: Install center pans before installing side pan. Install center pans from left to right on the drawing.

Standard and Open-Access Posi-Drain Instructions (cont.)

Pipe Connection

Connect the "Posi-Pipe" connector to the main drain line. The top of the "Posi-Pipe" should be approximately level with the top of the crossties for Standard Posi-Drain® Systems and approximately 1" below the top of the crossties for Open-Access Posi-Drain® Systems.

Back fill the pipe trench. Do not fill around the "Posi-Pipe". It must be allowed to hang freely under the pan.

Side Pan Installation

Install the right side pans first, i.e. the pans located on the right side when standing at center pan #1 looking at pan #2 (see general arrangement drawings). Once the right side has been completed, install the left side pans in the opposite direction beginning with the pan farthest away from the first pan. Use the same procedure for splice joint cut out on the side pans as used on center pans.

Dig a 6" deep trench along the out side of the pan system at the proper dimension away from the rail. Example: a 10 foot wide system has 2'-6" side pans. Dig the trench 2'-6" away from the side or rail. Sweep all debris from the top of the crossties, slide the side pan against the rail and position the hole in the drain reservoir over the hole in the "Posi-Pipe". Apply gasket and/or silicone on top of the "Posi-Pipe" around the hole. Lift and clamp the "Posi-Pipe" to the pan. Drill 5/16" holes and attach using the nuts, bolts and washers provided. The curb leg should be down into the trench. Back fill against the side pan with ballast to 2" below the top of the curb.

Transverse Joint Attachment

At the intersection of each pan there is a male/female transverse adjustable joint. (See general arrangement drawings). After all the center and side pans have been installed attach the female side of the joint to the male side of the pan using the self drilling screws provided. Drill four pilot holes in the center pan joint flange per the drawing, pulling the flange against the pan. Silicone can be applied along the flange for a better seal. Install 4 self drilling screws on the flat area of the overlap per the drawing. Seal all self drilling screws with silicone.

Standard and Open-Access Posi-Drain Instructions (cont.)

Cover Installation

STANDARD POSI-DRAIN® SYSTEMS: A snap-in drain cover is provided for each drain with an attachment chain. Place one end of the chain between the bottom washer and nut on one of the four bolts. Attach the opposite end of the chain in the pre-drilled hole on the snap-in cover bayonet. Place the 4" cover bayonets in the drain hole, allowing the chain to hang inside the drain. Push firmly into place.

OPEN-ACCESS POSI-DRAIN® SYSTEMS: FRP grating covers are provided for each drain reservoir area. Place the grating into the reservoir area which hold the grating from lateral movement (see general arrangement drawings).

For more detailed installation instructions on the Standard Posi-Drain® and Open-Access Posi-Drain® System, please call our sales office at (502) 898-7303.

GUIDE SPECIFICATIONS
TYPE II & III TRACK COLLECTOR PANS

1.0 GENERAL

1.1 DESCRIPTION OF SYSTEM

A fluid collection system for railroad beds compromised of a center collector pan and a pair of lateral side collector pans, all prefabricated of Fiberglass Reinforced Plastic. The center pan is configured for insertion between the rails, retained there by its own resilience. The side pans are configured for placement against the outsides of each rail, and held there by back fill. The pans will drain into transverse cross drains which interface with piping systems.

1.2 SUBMITTALS

Shop drawings -- General system arrangement and details will be furnished by SynTechnics, Inc. of Paducah, Kentucky.

1.3 INSTALLATION INSTRUCTIONS

Procedures for installation will be furnished by SynTechnics, Inc., of Paducah, Kentucky. Piping and drainage system must be furnished by others. The layout of the drainage system must interface with the hookup points of the track collector pan system -- See installation manual for more details.

2.0 PRODUCT

2.1 FRP TRACK COLLECTOR PAN COMPONENTS

FRP Track Collector Pans will have no gasket material between the tracks and pans, no fasteners between pans, no fasteners between rail or ties, and shall consist of:

A. One (1) center pan
B. Two (2) side pans
C. Cross drains spaced at either 19'-9" or 39'-5" intervals
D. Combination drain cover/cross walk grating
E. Drain supports

2.2 MATERIAL PHYSICAL CHARACTERISTICS (minimum)

A.	Tensile Strength	15,000 psi
B.	Compressive Strength	15,000 psi
C.	Flexural Strength	15,000 psi
D.	Shear Strength	15,000 psi
E.	Modulus of Elasticity	1.0×10^6 psi
F.	Fiberglass Content	35% by weight

2.3 MATERIALS

A. A thermosetting resin system shall be used and it shall be chemically resistant to the operating environment. The exterior surface shall contain either a polyester gelcoat or a light stabilized resin/veil surface. The laminate shall be suitable for service in a temperature range from -50° F to +130° F.

B. Fiberglass reinforcing shall consist of fiberglass mat, or chopped strand, with alternating layers of woven roving fabric as manufactured by Owens Corning, P.P.G., or equal. Woven roving fabric will be 24 oz./square yard (nominal).

C. Underside of pan shall be 0.010" corrosion resistant veil or equal liner for maximum corrosive soil resistance.

D. Corrosion barrier on collection surfaces of pan will be no less than 0.020". Total material thickness shall be 0.1875" (nominal).

E. Walking surface shall be coarse, textured, antiskid.

F. Recessed safety grating will be incorporated at cross drains, 19'-9" or 39'-5" spacing.

2.4 FABRICATION

A. Collector pans shall be as fabricated by SynTechnics, Inc., Paducah, KY, or approved equal. All components must be fabricated from molds that provide continuous 19'-9" or 39'-5" monolithic pan sections. The Track Collector Pans will be open contact, male molded, assuring a resin-rich chemical and moisture barrier on both the top and the underside of the pan system.

B. The application of resin and fiberglass must be controlled during fabrication. All fiberglass reinforcements shall be saturated with resin, thus assuring uniform structural properties, proper design thickness, and non-permeability.

3.0 QUALITY ASSURANCE

3.1 MANUFACTURER

The Track Collector Pan manufacturer shall exhibit satisfactory performance on projects of similar magnitude under similar or equal service conditions for a period not less than five (5) years. Acceptable manufacturers based on fabrication methods and experience are SynTechnics, Inc., of Paducah, Kentucky. Other manufacturers must submit proof of compliance for approval by the engineer before the project bid date.

3.2 GUARANTEE

Provide a guarantee against defects in materials and workmanship for a period of not less than one (1) year after installation or one and one-half (1-1/2) years from the date of shipment, whichever occurs first.

SYNTECHNICS INC.

A Trinity Industries, Inc., Company

Track Collector Pan Systems

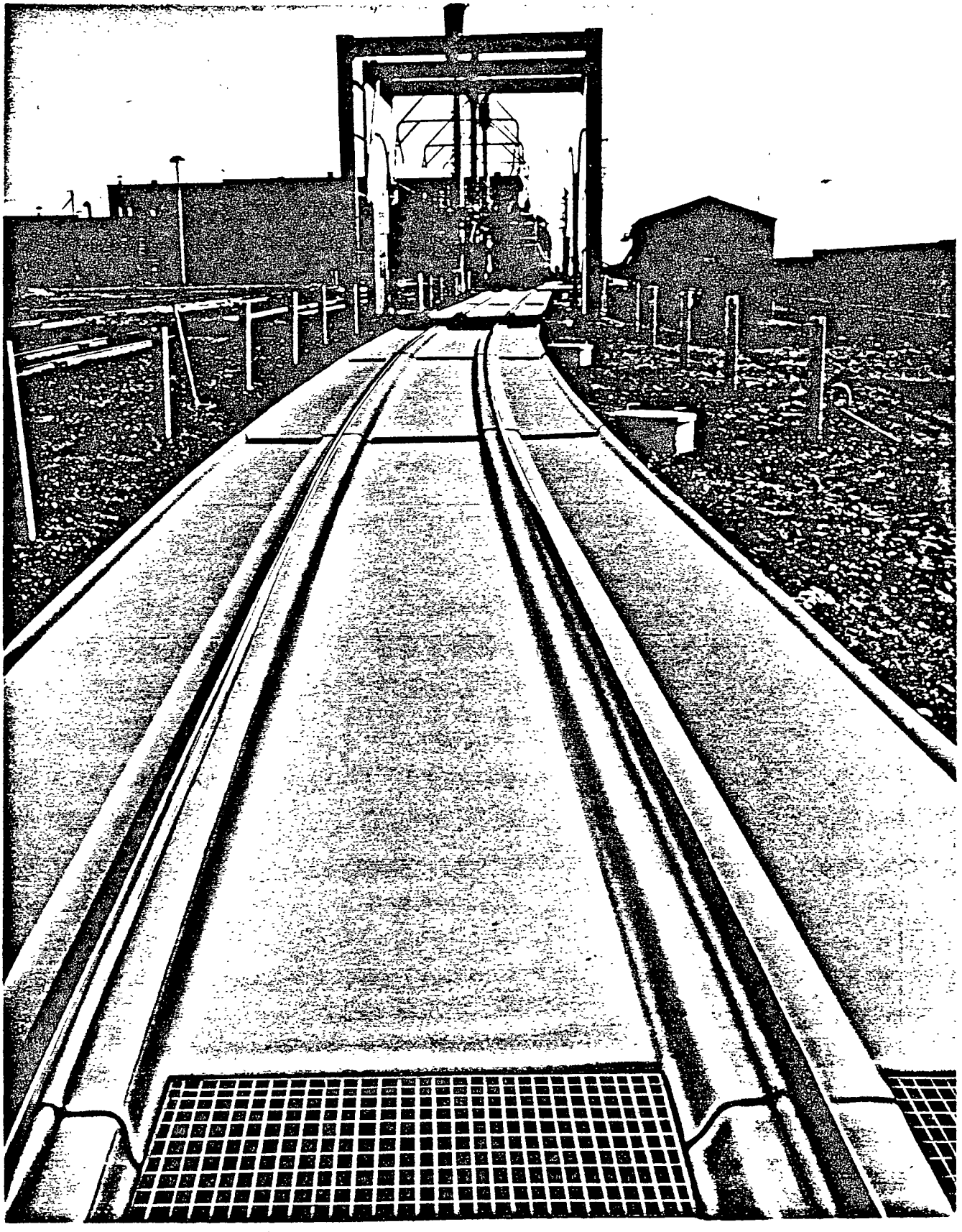

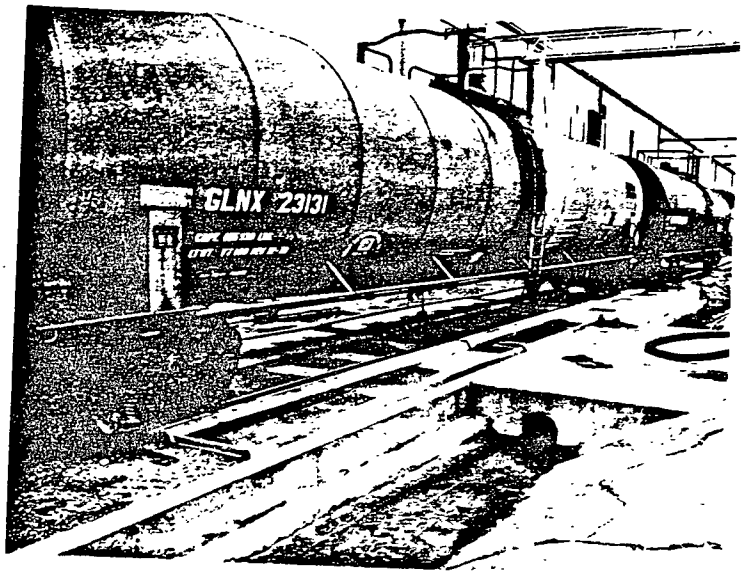

Protection against sp

Managers of industrial or railroad facilities handling oil fuel and chemicals are aware that even the most carefu procedures cannot totally eliminate spills in areas wher rail cars and locomotives are loaded, unloaded, washed fueled. It's a serious problem because the spilled substances can damage the environment as well as cross ties and equipment.

SynTechnics FRP (Fiberglass Reinforced Plastic) Track Collector Pan Systems offer protection by collecting and isolating spills for treatment and disposal. Properly installed to connect with permanent waste treatment systems, they can limit environmental problems caused by uncollected spillage, and reduce downtime for equipment repair.

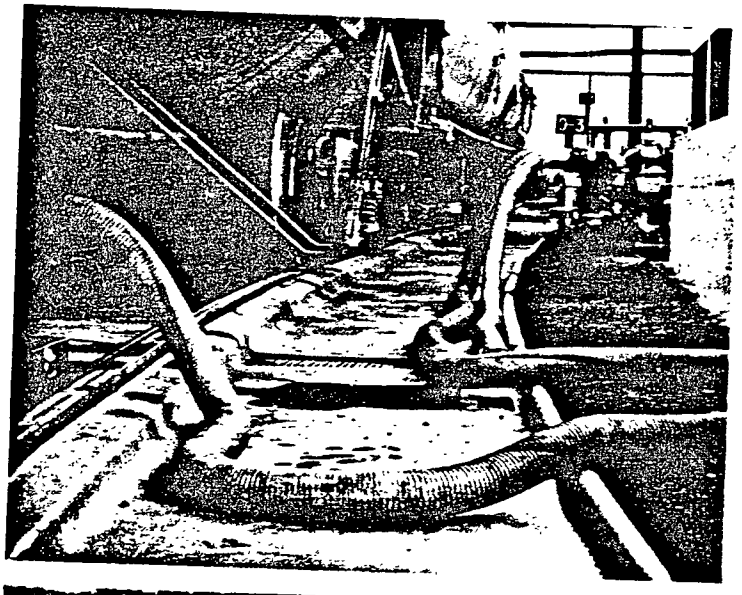

Simple, efficient syste

System components include collector pans that attach to rails and cross drains that connect with pre-installed underground pipes or trenches. Substances flow to a sump or collection tank for treatment or disposal.

Through years of field experience and testing, the SynTechnics FRP Track Collector Pan Systems have been developed and refined to achieve design simplicity and system economy. The FRP Systems offer the following advantages over alternative methods:

- Standard pan sections are 19'9" and 39'5" long and cover widths from 10' to 14'.
- Pans will fit most sizes of rail including the 90 pound rail often used at loading and unloading si
- All SynTechnics Track Collector Pans can be man to fit curved tracks up to 21' and areas around sw
- The pan walking surface can be made with a perm nent "non-skid" texture or smooth surface for ma mum corrosion resistance.
- The greatest advantage of SynTechnics FRP Track Collector Pan Systems is the reasonable TOTAL INSTALLED COST.

Corrosion resistance

Fiberglass has earned a reputation for its resistance to corrosion from aggressive substances. The SynTechnics FRP Track Collector Pan System stands up against many chemicals that would prove highly destructive to steel or concrete systems. SynTechnics' manufacturing process makes use of specially selected resins which resist corrosion in customer-specified chemical environments. In these specific applications, customer testing for compatibility will verify the performance of the resins.

Fiberglass construction

SynTechnics is one of the leading manufacturers of structural fiberglass reinforced plastic in the worl
Materials and processes used in making track collector pan systems reflect more than two decades of
experience in fiberglass technology. SynTechnics' expertise assures that every component is built for
maximum durability and resistance to corrosion in oil and chemical environments specified by
SynTechnics customers. Smooth, textured or non-skid surfaces are available.

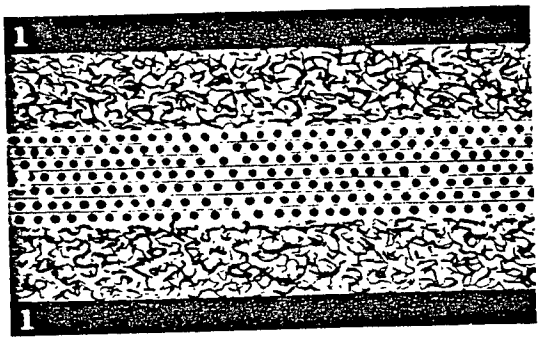

1. *Top and bottom surfaces are specially selected resins to provide the toughest possible protection from corrosive chemicals.*
2. *Mats of reinforcing chopped fiberglass strands lend extra protection against corrosion.*
3. *Inner layer of woven roving gives strength and stability to collector pans.*

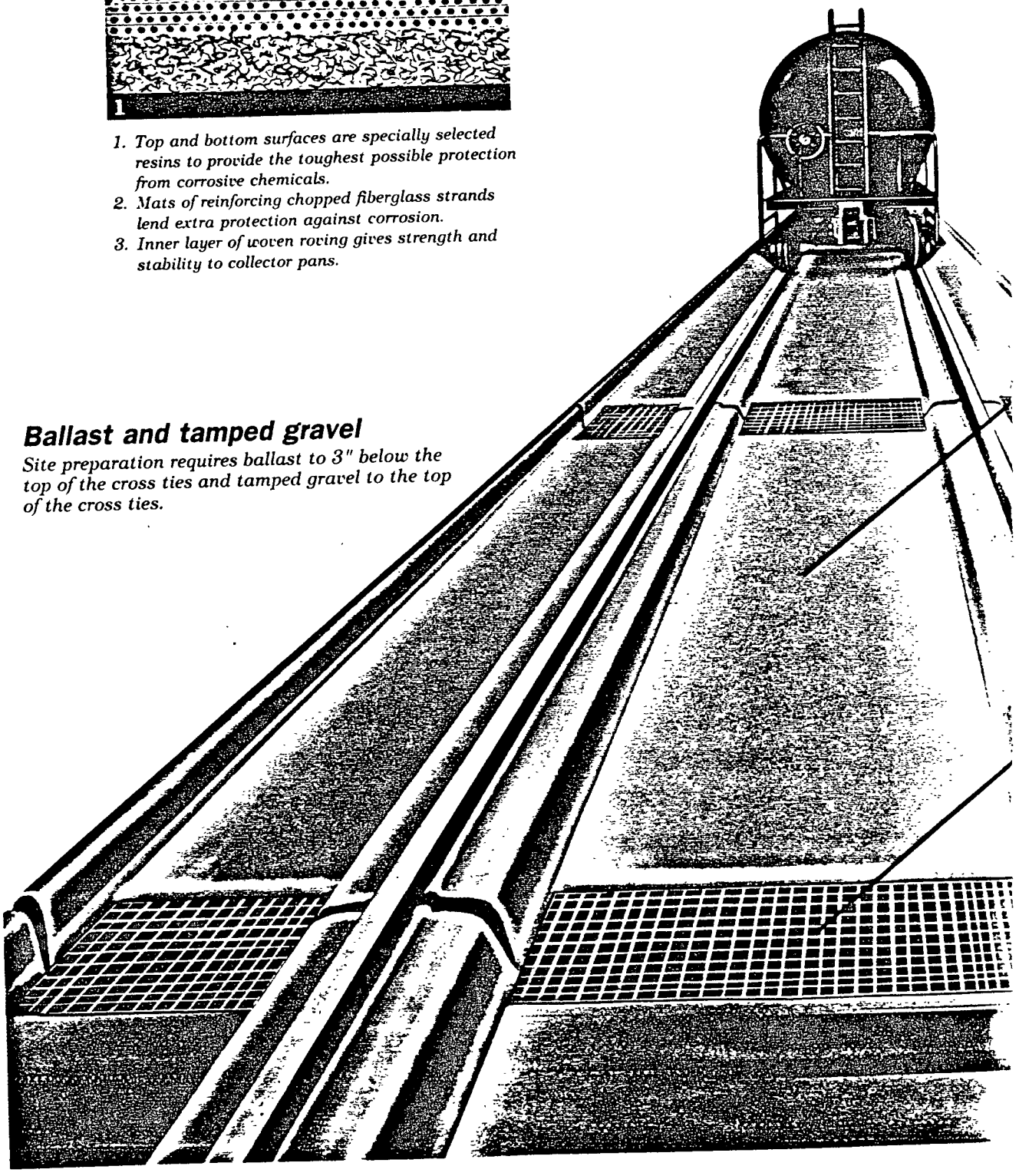

Ballast and tamped gravel

Site preparation requires ballast to 3" below the top of the cross ties and tamped gravel to the top of the cross ties.

Easy installation, minimal maintenance

Installation of SynTechnics FRP Track Collector Pan Systems requires minimal downtime. Because fiberglass is lightweight, a small crew can install the system without heavy handling equipment. Components can be removed and replaced, without damage, if cross ties need repair.

System components require little maintenance. Durability is not affected by temperatures between -50°F and +130°F. Any damage to components can be repaired with simple hand tools. Replacement components can be reordered within a short lead time.

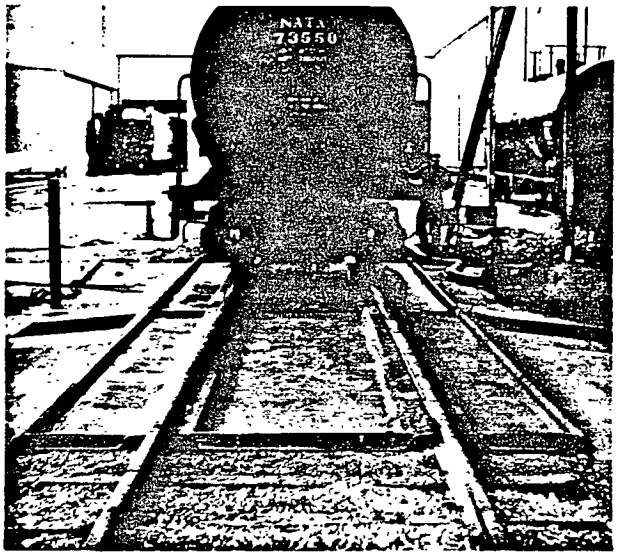

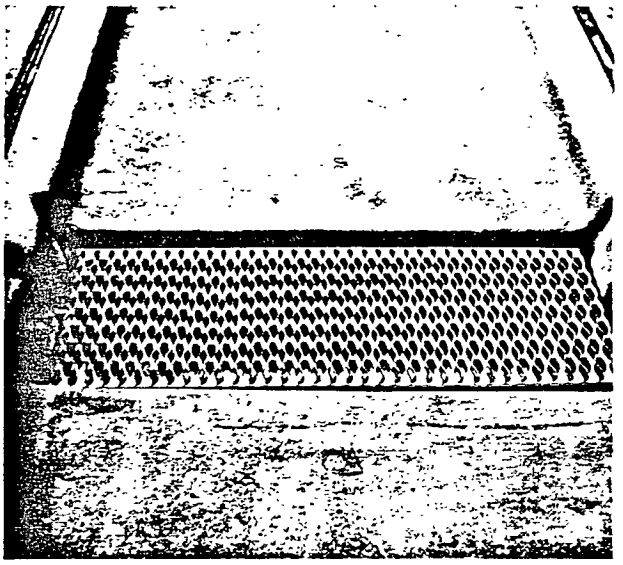

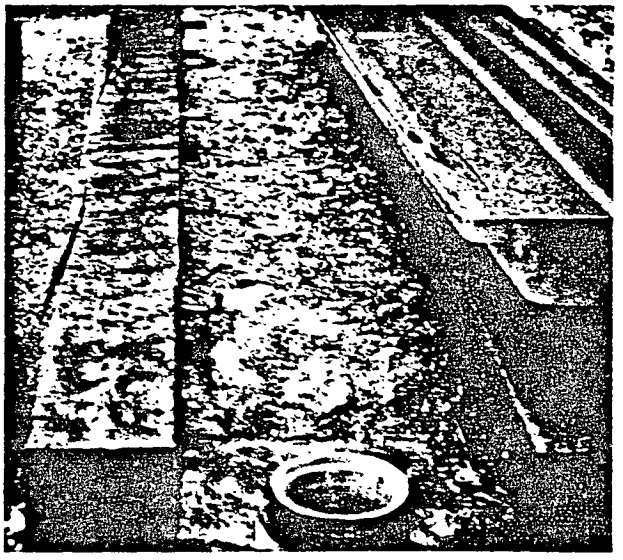

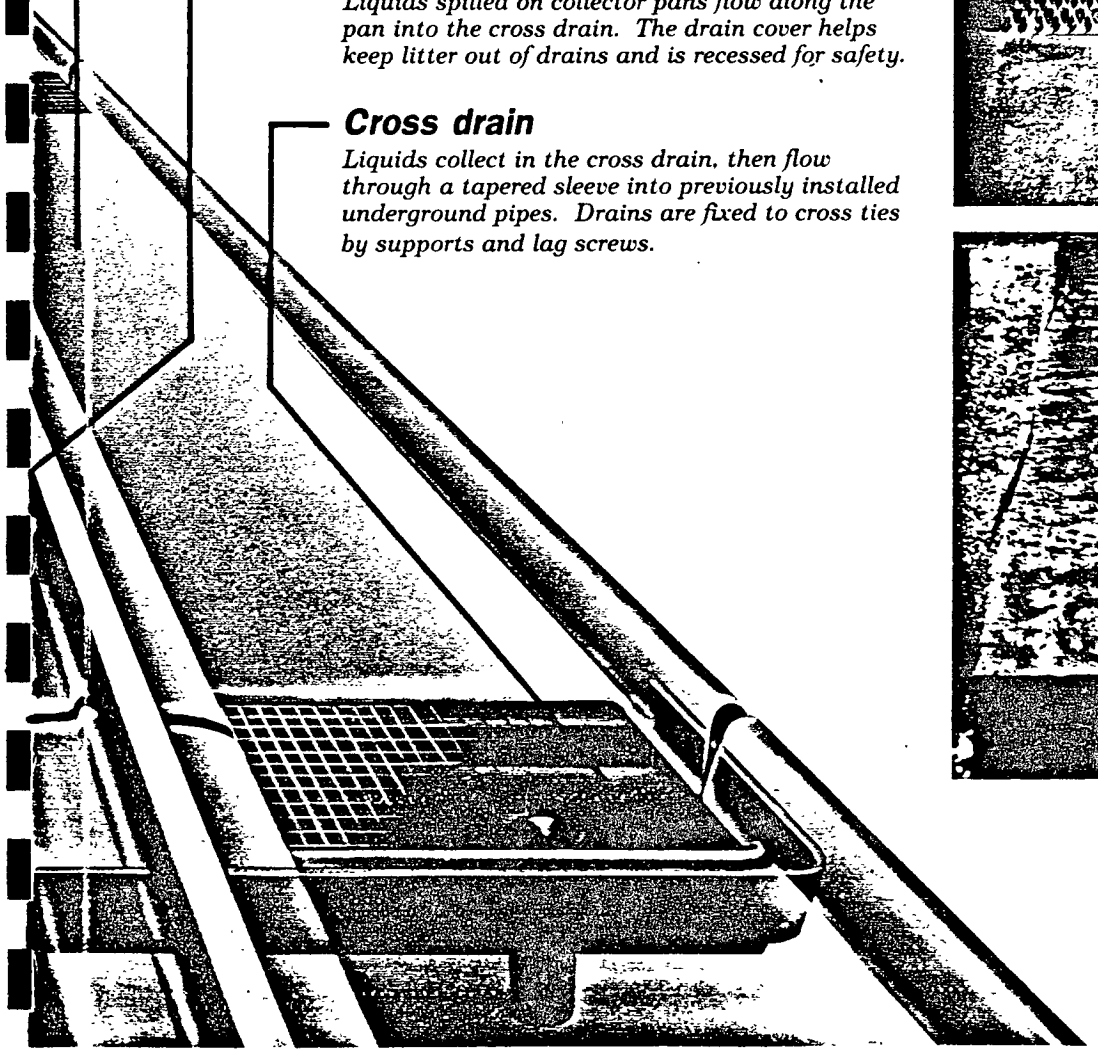

Center pan section

Sections are snapped into place and "float" between the rails. No fasteners or fixed connectors are used, so the system is not affected by track shift or road bed movement.

Side pan section

Pan sections are continuous between cross ties. There are no lateral joints to connect.

Drain cover/cross walk

Liquids spilled on collector pans flow along the pan into the cross drain. The drain cover helps keep litter out of drains and is recessed for safety.

Cross drain

Liquids collect in the cross drain, then flow through a tapered sleeve into previously installed underground pipes. Drains are fixed to cross ties by supports and lag screws.

POSI-DRAIN® TRACK COLLECTOR PAN SYSTEM

Standard Posi-Drain System

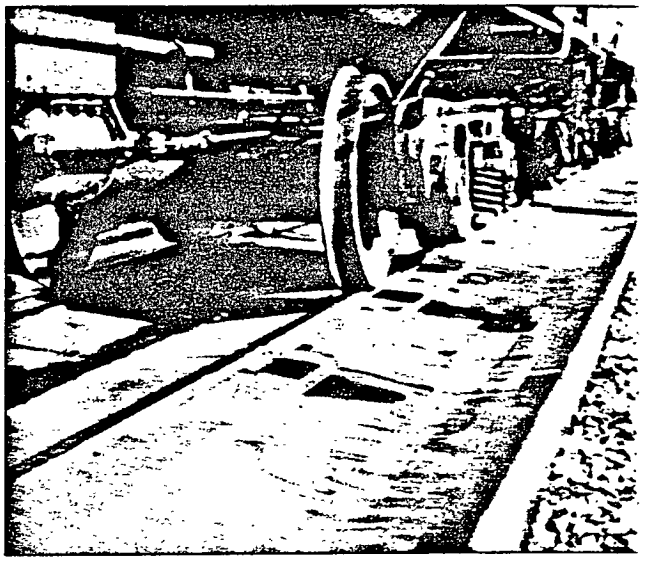

Liquids that are spilled on the Posi-Drain Track Collector Pan System flow directly to the drain area in the center of the pans. Each drain is connected to a drain pipe that ties together the pan system to your main drain. The drain openings are protected by a bayonet mounted snap-in Stainless Steel Drain cover that allows liquids to pass through, while screening out large debris. The one piece sloped collector pan design reduces the safety hazards caused by standing liquids and its gasket connection can eliminate the potential for leakage at the cross drain / collector pan interface. The Posi-Drain Collector Pan System comes in 10, 12, 14, & 16 foot widths.

Open-Access Posi-Drain System

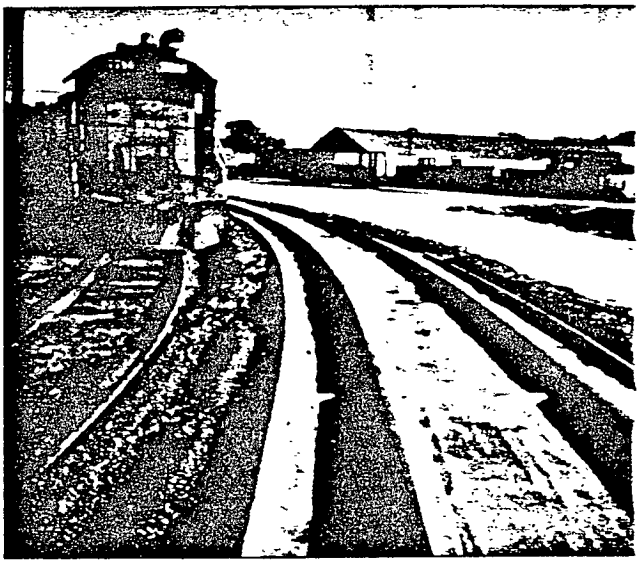

For customers requiring a one piece sloped system with a sealed, openly accessible cross drain, we developed the Open-Access Posi-Drain Collector Pan System. For removal of sand and sediments, the Open-Access Collector pans have a recessed 10" wide opening to allow entry into the cross drain with a track shovel. The recessed drains are protected by removable FRP Grating Covers. A bolting flange seals the Open-Access Collector Pan to the Sloped Posi-Style Cross Drain.

The Unique Design

A transverse overlapping adjustable sealed joint connects the Pan Sections at 19'9" or 39'6" intervals. The Posi-Drain Track Collector Pan System is designed to reduce or eliminate the need to move any crossties during installation. Your drainage system can be easily connected to the bottom or end of the "Posi-Pipe". A heavy Non-Skid sand texture is provided in walking areas. Special grating systems can be designed to fit directly on the collector pan surface.

MAYFIELD PRINTING INC., 1-800-626-3

COMPONENT DESCRIPTION:

① *Center Pan*
② *Side Pan*
③ *"Posi-Pipe Drain Connector*
④ *Transverse Adjustable Joint*
⑤ *3 1/2" FRP Flashing*
⑥ *Removable Stainless Steel Cover*
⑦ *Special Safety Grating System (Optional)*
⑧ *Rubber Gasket*
⑨ *Threaded Pipe Connector*
⑩ *Fasteners*

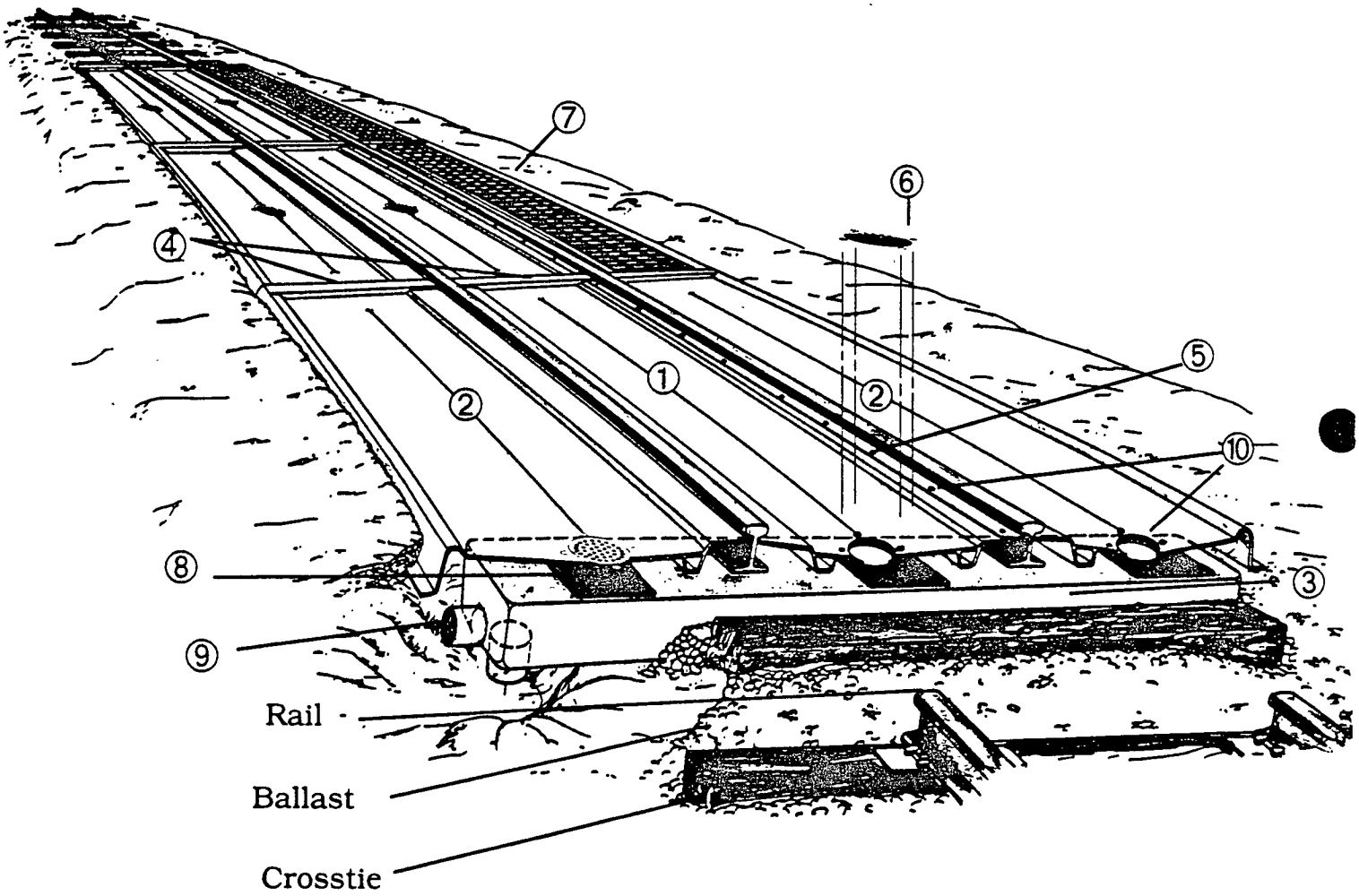

SYNTECHNICS INC.

A Trinity Industries, Inc., Company

700 Terrace Lane • Paducah, KY 42003 • (502) 898-7303 • FAX: (502) 898-7306

TYPE IV & V SLOPED TRACK COLLECTOR PAN SYSTE

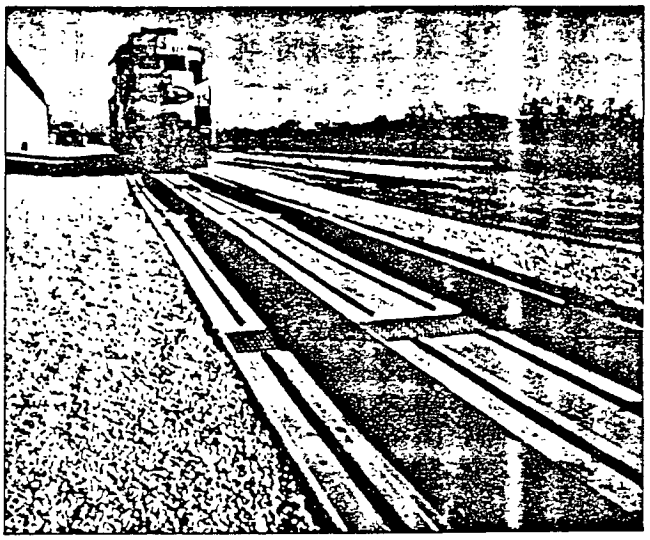

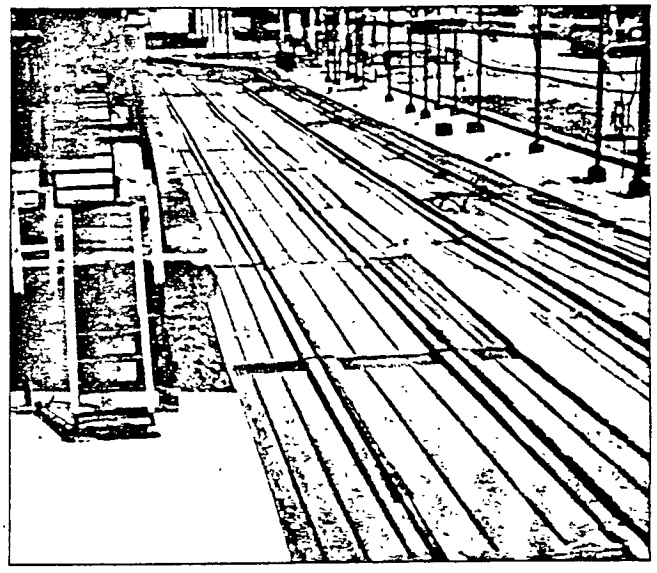

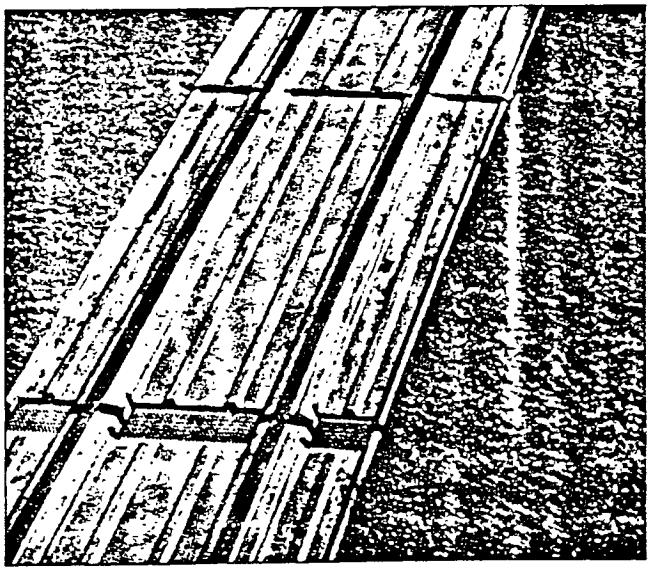

The "Slope" system differs from "Flat" system in that there is a 1" per 10' slope built into the pan t aid drainage of the spilled material. SynTechnics "Sloped" systems are identical to "Flat" systems i laminate construction and concept.

SynTechnics Sloped Track Collector Pan Systems for tank car loading/unloading stations and railroa refueling areas are composed of a center collector pan and a pair of side collector pans. The collector pans empty into crossdrains placed perpendicularl between pan sections. A combination drain cover /crosswalk grating covers the crossdrain.

Through years of field testing, the SynTechnics Sloped FRP Track Collector Pan Systems have bee developed and refined to achieve design clarity an system efficiency. The Sloped FRP Systems offer the following characteristics:

- Pan systems have built in 1" per 10' slope
- For 20' nominal pan systems, a single male center pan is used that is 20'1/2" total length.
- For 40' nominal pan systems, one male an one female pan is used. When the two pan are "mated" in the center, the total lengtl is the same as the flat pan system, 40' nominal.
- Standard male side pan is 20' nominal long and standard female side pan is 20' nominal long.
- Exterior crossdrain has the same widths as the flat pan system.
- For a 20' nominal pan system, nine grade supports, three under each male pan, sup plied by SynTechnics, combined with pea gravel, supplied by others, are used to pr vide support below the surface of the sloped pans.
- For 40' nominal pan system, fifteen grade supports, three under each male pan and two under each female, supplied by SynTechnics, combined with pea gravel, supplied by others, are used to provide support below the surface of the sloped pans.
- Sloped systems offer a variety of colors an resin selections depending on the environ ment exposed to.

MAYFIELD PRINTING INC., 1-800-626-

COMPONENT DESCRIPTION:

① Center Pan-Male
② Center Pan-Female
③ Side Pan-Male
④ Side Pan-Female
⑤ Cross Drain
⑥ Drain Cover/Cross Walk Grating
⑦ Cross Drain Supports and Lag Screws
⑧ Grade Supports
⑨ Male/Female Overlap Joint

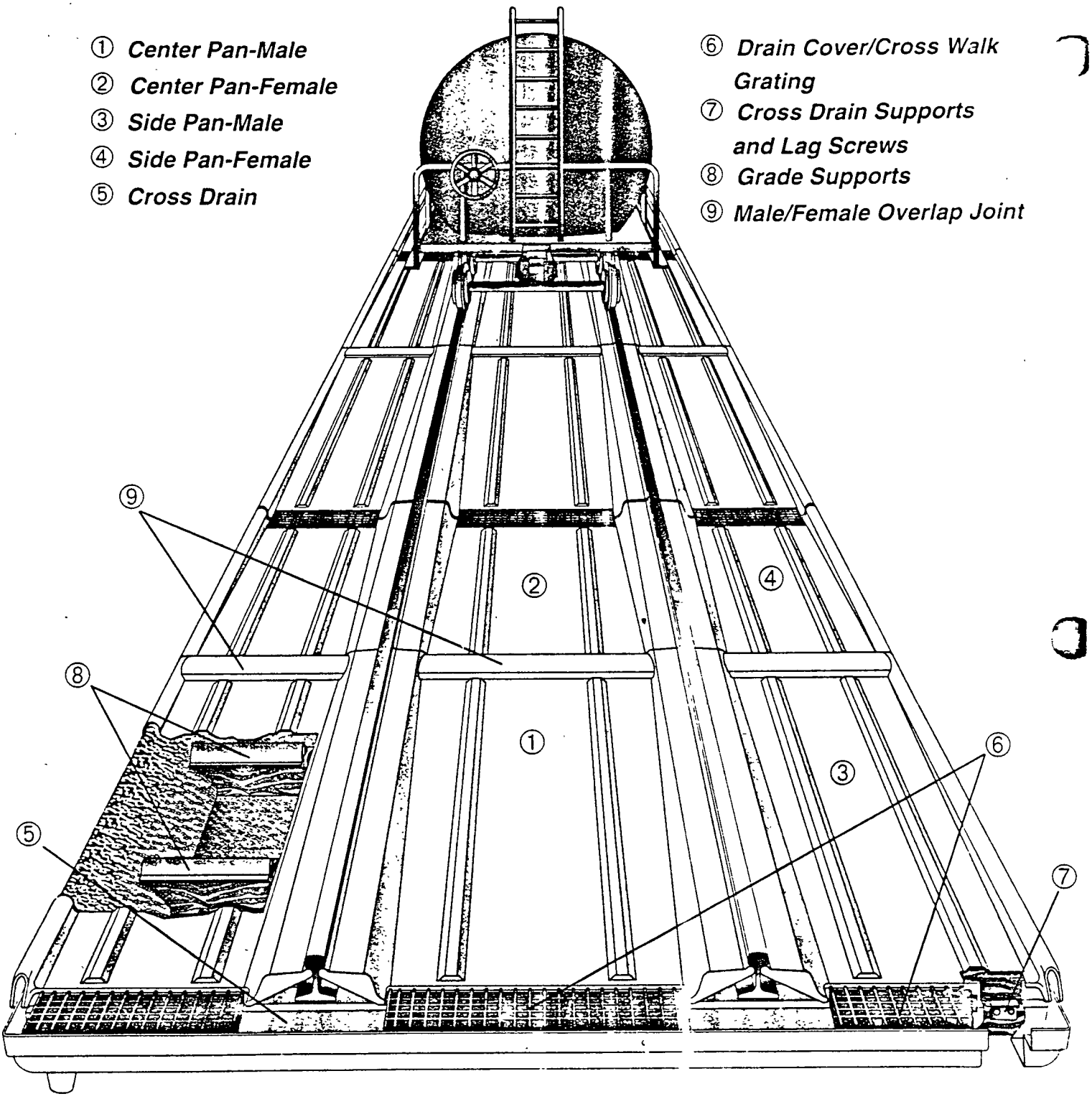

SYNTECHNICS INC.

A Trinity Industries, Inc., Company

T( ) T(ne • P ical 3 • (502) 99 • FAX: (502)

SYNTECHNICS INC.

FIBERGLASS REINFORCED PLASTIC TRACK COLLECTOR PAN ENGINEERS PRODUCT INFORMATION CATALOG

Background on Syntechnics 1
- Trinity Industries Incorporated. 1
- SynTechnics Product Lines 1
- FRP Track Collector Pan History 3

Product Descriptions 4
- Product Keypoints 6
- Type II Characteristics 7
- Type III Characteristics 8
- Type II & III General Arrangement Drawings 9
- Type IV Characteristics 15
- Type V Characteristics 16
- Type IV & V General Arrangement Drawings 17
- Standard Posi-Drain® Characteristics 21
- Open-Access Posi-Drain® Characteristics 22
- Standard and Open-Access General Arrangement Drawings 23
- Rail Drawings 30

Installation Information 32
- Type II & III Installation Manual 32
- Installation Estimates for Type II, III, IV & V 33
- Type IV & V Installation Instructions 34
- Installation Estimates for Standard Posi-Drain® 37
- Installation Estimates for Open-Access Posi-Drain® 39
- Standard and Open-Access Posi-Drain® Installation Instructions 40

FRP Track Collector Pan Advantages over Alternative Products 44
- FRP vs Steel Comparison 44
- Alternative Product Comparison Chart 47

Track Collector Pan Specifications 48
- Type II & III Specifications 48
- Type IV & V Specifications 51
- Standard Posi-Drain® Specifications 54
- Open-Access Posi-Drain® Specifications 57

(Issue date August 21, 1995)

Background on SynTechnics

A TRINITY INDUSTRIES, INC., COMPANY

On September 1, 1994, SynTechnics, Inc. became a member of the Trinity Marine Group. TMG is a subsidiary of Trinity Industries Inc., a Dallas, TX based "Fortune 500" company. In business since 1933 (over 60 years), Trinity operations are divided into six major segments with total gross revenue in excess of $1.7 billion annually and employing more than 12,000 workers. The six segments of Trinity Industries operations are broken down as follows:

Rail Cars - The manufacture of freight cars: principally tank cars, hopper cars, gondola cars, intermodal cars and miscellaneous other freight and railcar parts and components.

Marine Products - The manufacture of barges and various offshore service vessels for ocean and inland waterway service. Products include supply, crew, fishing, research and other types of boats as well as military vessels for the US Government and a variety of barge types for both ocean and inland waterway use.

Construction Products - The manufacture of highway guardrail and beams, girders, and columns used in the construction of office, industrial and commercial buildings, highway and railway bridges, power plants and mills, airport passenger boarding bridges, and baggage handling systems.

Containers - The manufacture of pressure and non-pressure containers for the storage and transportation of liquified gases, brewery products and other liquid and dry products and heat transfer equipment for the chemical, petroleum and petrochemical industries.

Metal Components - The manufacture of welded fittings (tees, elbows, reducers, caps, flanges, etc.) used in pressure piping systems and container heads (the ends of pressure and non-pressure containers) for use internally and by other manufacturers of containers.

Leasing - The leasing of Company manufactured rail cars and barges to various industries.

SYNTECHNICS PRODUCT LINES

#1. Track Collector Pan Systems, manufactured for the rail and industrial sectors, are designed and manufactured to contain spillage of the corrosive materials found at chemical loading facilities. These systems are also used by the railroad industry at fueling facilities, locomotive workshops and wash stations. The Track Collector

Pans offer cost effective protection for the environment with low installation and maintenance costs.

#2. SynTechnics **Environmental Cover Systems**, have been installed at more than 250 locations in the United States, Canada, Mexico, and Peru. The cover systems are available in a variety of sizes and shapes. Some of the largest FRP domes ever produced were SynTechnics covers installed at an Oklahoma City, OK, wastewater treatment facility (four domes at 132 ft. diameter). Other notable projects include four domes at 122 ft. diameter for Watertown, NY, two domes at 120 ft. diameter for Wyoming, MI, sixteen domes at 100 ft. diameter for Akron, OH, one barrel arch cover with an 87 ft. clear span for Bloomingdale, IL, and two acres of flat covers for Carlsbad, CA. All of SynTechnics structures are designed in conformance with American Society of Civil Engineers - ASCE-7 or other specified requirements. One structure of note is a 100' diameter FRP dome installed at Hailey, ID and designed for a snow load of 90 pounds per square foot. SynTechnics features female molding as a standard on Environmental Cover Systems. This yields a higher quality product than the male molded parts produced by others. While female mold design and construction is more expensive than male mold design and construction, SynTechnics has developed and incorporated proprietary and cost effective manufacturing techniques and implemented structurally efficient designs to maintain a competitive edge on pricing.

#3. In addition to the Environmental Cover Systems, SynTechnics has earned valuable FRP experience in the production of other product lines. SynTechnics **Barge Cover Systems** are in use on both inland and ocean style barges. Nearly 6000 sets of **Inland Barge Cover Systems**, 700 sets of **LASH Barge Cover Systems**, and 4 sets of **Ocean Going Barge Cover Systems** have been manufactured. One of the largest Ocean Going Barge Cover Systems ever built was designed and manufactured for the S.C. Loveland Corporation of Philadelphia. This system consisted of eight (8) covers spanning a 60' wide hopper opening over two hundred feet in length with each cover weighing about 30 tons. When produced in 1980, it was one of the largest structures ever made from FRP.

#4. **Rail Car Cover Systems** manufactured by SynTechnics, protect rail cargo, such as steel and grain, all over the United States and Canada. Rail Car Cover Systems are available in several configurations including Low and High Profile Gondola Car Cover Systems, and Coil Car Cover Systems. These systems are designed to be installed or removed and stacked in less than 15 minutes using only a light crane or fork truck.

SynTechnics' expertise in the manufacture of large structural FRP parts is supplemented by a team of engineering professionals experienced in the design of those parts. This team includes project engineers experienced in planning and implementing large

undertakings and in the design of fiberglass products, design draftsmen with complete knowledge of our Computer Aided Design and Drafting (CADD) system, and several experts with years of tooling, process and fabrication experience.

As a Trinity Industries company, SynTechnics enjoys the ability to serve our customers with a level of strength and stability only a "Fortune 500" company can provide.

Background on Syntechnics

Fiberglass Reinforced Plastic Track Collector Pan History

The first track collector pans were designed to meet the needs of the railroad industry, specifically for diesel refueling and washing areas. In 1974 Proform, Inc., began building FRP (Fiberglass Reinforced Plastic) Track Collector Pans. These pans were male molded and had a non-skid surface for safety. The average installation was 800 linear feet with a 40 foot nominal pan length. This was found to be the most cost effective length when comparing installation, manufacturing, and shipping costs.

As the industrial and chemical user became more interested in this product, the female molded industrial track collector pan system was developed. Product design, prototype, and production was completed in early 1982. Since the average industrial installation is smaller than the rail installation, a shorter pan length was selected. This enhanced spill control and provided easier shipping and handling. The female molded process was selected based on the industry preference for corrosive liquid surface contact, i.e., FRP tanks, FRP pipe, etc. As the market expanded in 1984, customer feedback suggested an Anti-Skid Industrial Track Collector Pan system be manufactured combining corrosion resistance with an anti-skid surface for a safer walking and working area. To combine the benefits of the corrosion resistant female molded pan and the safety benefits of the male molded pan, the Industrial Male Molded Track Collector Pan was designed. At the same time a special grating design was developed and offered as an option to complement the total track collector pan system.

In August of 1985, Proform sold its Transport Covering and Environmental Covering Division to SynTechnics, a wholly owned subsidiary of the Alpha Corporation, the largest manufacturer of polyester resins in the United States. SynTechnics now produces the Track Collector Pans at its facility in Paducah, KY.

In 1991, several of SynTechnics customers requested a pan system with a built in slope to prevent the occurrence of any materials collecting or puddling on the pans. A team of personnel from the sales, engineering, and production departments was assembled to accomplish the task. The team wanted to design the pan to provide a positive slope, yet still retain many of the features of the standard pan design, i.e., ease of installation, no

surface penetrating screws, and the availability of the textured non skid surface. Within 90 days SynTechnics had successfully designed, built, shipped, and installed the first Type IV & V sloped pan systems.

In 1994, SynTechnics acquired the Posi-Drain® System, a one piece sloped pan system with a gasket connection that can eliminate the potential for leakage at the cross drain / collector pan interface. Xenium Fiberglass Corporation and SynTechnics, Inc., acquired on September 1, 1994 by Xenium's parent, have now merged under that parent company, Trinity Industries, Inc., and all Track Collector Pan System products are now being marketed through the SynTechnics' Sales Department. This merger has allowed us to offer the **Largest Selection of "Splash and Spill Containment" Products Available** on the market to meet your bulk material handling requirements in a safe, cost effective, and environmentally friendly way.

Product Descriptions

SynTechnics Track Collector Pan Systems for tank car loading/unloading stations and railroad refueling areas are composed of a center collector pan and a pair of side collector pans fabricated from structural Fiberglass Reinforced Plastic (FRP). The center pan is configured for insertion between the rails and is retained by its own resilience. Side pans are held in place by backfill and have no fasteners between pans and rails. The collector pans empty into crossdrains placed perpendicularly between pan sections. The crossdrains interface with a pre-installed or existing piping system which carries substances to a waste treatment disposal facility, an oil/water separator or any other proper storage vessel. A combination drain cover/crosswalk grating covers the crossdrain. The system includes supports and lag screws for attachment to crossties, which provide support for the crossdrain.

There are six types of Track Collector Pan Systems:

- ✓ **TYPE II** systems are available in 20' and 40' nominal pan lengths, and 10', 12', and 14' system widths. 16' wide systems are available in 20' lengths. These systems are best applicable for high corrosion areas where foot traffic could be expected. The pans are male molded which can be textured to provide an antiskid type walking surface. The pans can be manufactured to fit curved track up to 21 degrees. The Type II systems can fit rail sizes from 90# per yard and up. See Page 7 for additional information on the Type II pan system.

- ✓ **TYPE III** systems are available in 20' and 40' nominal pan lengths, and 10', 12', and 14' system widths. 16' wide systems are available in 20' lengths. These systems are best applicable for mild to non corrosive areas where

foot traffic could be expected. The pans are male molded which can be textured to provide an antiskid type walking surface. The pans can be manufactured to fit curved track up to 21 degrees. The Type III systems can fit rail sizes from 90# per yard and up. The pans can receive a gray or yellow surface coat. See Page 8 for additional information on the Type III pan system.

✓ **TYPE IV** systems are available in 20' and 40' nominal pan lengths, and 10', 12', and 14' system widths. Type IV pans are identical to Type II pans in laminate construction. They differ in that the Type IV systems have a 1" per 10' slope built into the pan to aid in drainage of the spilled material. These systems are best applicable for high corrosion areas where foot traffic could be expected. The pans are male molded which can be textured to provide an antiskid type walking surface. The pans can be manufactured to fit curved track up to 21 degrees. The Type IV systems can fit rail sizes from 90# per yard and up. See Page 15 for additional information on the Type IV pan system.

✓ **TYPE V** systems are available in 20' and 40' nominal pan lengths, and 10', 12', and 14' system widths. Type V pans are identical to Type III pans in laminate construction. They differ in that the Type V systems have a 1" per 10' slope built into the pan to aid in drainage of the spilled material. These systems are best applicable for mild to non corrosive areas where foot traffic could be expected. The pans are male molded which can be textured to provide an antiskid type walking surface. The pans can be manufactured to fit curved track up to 21 degrees. The Type V systems can fit rail sizes from 90# per yard and up. The pans can receive a gray or yellow surface coat. See Page 16 for additional information on the Type V pan system.

✓ **STANDARD POSI-DRAIN®** Systems are available in 20' and 40' nominal pan lengths, and 10', 12', 14', and 16' system widths. They differ from the Type IV & V in that they provide a "sealed" gasket connection at the crossdrain / collector pan interface. These systems are applicable for high corrosion, mild, and non corrosive areas (determined from resin choice) where foot traffic could be expected. The pans are male molded which can be textured to provide an antiskid type walking surface. The pans can be manufactured to fit curved track up to 21 degrees. The Posi-Drain systems can fit rail sizes from 90# per yard and up. See page 21 for additional information on the Posi-Drain® system.

✓ **OPEN-ACCESS POSI-DRAIN®** systems are available in 40' nominal pan lengths, and 10' system widths. They differ from the Standard Posi-Drain in that they provide a one piece sloped system with a sealed, but "openly"

accessible cross drain. These systems are applicable for high corrosion, mild, and non corrosive areas (determined from resin choice) where foot traffic could be expected. The pans are male molded which can be textured to provide an antiskid type walking surface. The pans can be manufactured to fit curved track up to 21 degrees. The Open-Access Posi-Drain® system can fit rail sizes from 90# per yard and up. See page 22 for additional information on the Open-Access Posi-Drain® system.

Product Descriptions

Product Keypoints

This page is a condensed page detailing the various features that are common to all 6 Types of Pans.

- ✓ Track Collector Pan Systems collect and isolate spills for treatment and disposal.
- ✓ The system can be tailored for your particular chemical requirements and facility needs.
- ✓ The systems can be manufactured to fit curved track ranging from 3 degrees to 21 degrees with no field trimming or cutting required.
- ✓ Pans will fit all rail sizes from 90# per yard and up.
- ✓ Fiberglass construction provides for corrosion resistance from aggressive substances which would normally prove highly destructive to steel or concrete systems.
- ✓ Installation is simple and easy. Systems can be installed at your facility by your own maintenance personnel.
- ✓ Fast installation will result in minimum downtime of the railway facility.
- ✓ All components can be removed if necessary, replaced and/or relocated.
- ✓ Components are virtually maintenance free.
- ✓ Repairs can be accomplished with simple small hand tools.
- ✓ Most systems can be manufactured and shipped within ten to twelve weeks.
- ✓ Pans can be manufactured to fit around switch areas.

Product Descriptions

Type II Characteristics

- Standard Center Pan is 19'-9" or 39'-5" long and is used between crossdrains for a continuous system.
- Dammed End Center Pan is 18'-11" or 38'-7" long as is used at the end of a system where a crossdrain is not required.
- Standard Side Pan is 19'-9" or 39'-5" long and has a standard width of 2'-6", 3'-6", or 4'-6", and is used between crossdrains for a continuous system. 5'-6" side pans are available in the 19'-9" length only.
- Dammed End Side Pan is 18'-11" or 38'-7" long and has a standard width of 2'-6", 3'-6", or 4'-6", and is used at the end of a system where a crossdrain is not required. 5'-6" side pans are available in the 18'11" length only.
- Standard Crossdrain has a 9'-10", 11'-10", 13'-10", or 15'-10" width and is used between pans to join center and side pans and to provide a continuous system. The crossdrain is also used to link the track collector pan system with a pre-installed disposal system.
- Exterior Crossdrain has the same widths as the standard crossdrain but is used at the end of a system where a crossdrain is required. The exterior crossdrain also links the track collector pan system with a pre-installed disposal system.
- The End Dam Set consists of one center and two side pan end dams and is used on the outside of a system requiring an exterior crossdrain.
- Grating Assemblies consist of three pieces of FRP Grating that cover each crossdrain and are used for a walk area across the track collector pan system.
- The Hardware Package consists of angle brackets and lag screws that are attached to key crossties and are used to support the crossdrains.
- Type II pan systems have a UV inhibitor in the resin to protect from harmful UV degradation.
- Type II pans are available in vinyl ester or isophthalic polyester resins.

Product Descriptions

Type III Characteristics

- Standard Center Pan is 19'-9" or 39'-5" long and is used between crossdrains for a continuous system.
- Dammed End Center Pan is 18'-11" or 38'-7" long as is used at the end of a system where a crossdrain is not required.
- Standard Side Pan is 19'-9" or 39'-5" long and has a standard width of 2'-6", 3'-6", or 4'-6" and is used between crossdrains for a continuous system. 5'-6" side pans are available in the 19'-9" length only.
- Dammed End Side Pan is 18'-11" or 38'-7" long and has a standard width of 2'-6", 3'-6", or 4'-6" and is used at the end of a system where a crossdrain is not required. 5'-6" side pans are available in the 18'-11" length only.
- Standard Crossdrain has a 9'-10", 11'-10", 13'-10", or 15'-10" width and is used between pans to join center and side pans and to provide a continuous system. The crossdrain is also used to link the track collector pan system with a pre-installed disposal system.
- Exterior Crossdrain has the same widths as the standard crossdrain but is used at the end of a system where a crossdrain is required. The exterior crossdrain also links the track collector pan system with a pre-installed disposal system.
- The End Dam Set consists of one center and two side pan end dams and is used on the outside of a system requiring an exterior crossdrain.
- Grating Assemblies consist of three pieces of FRP Grating that cover each crossdrain and are used for a walk area across the track collector pan system.
- The Hardware Package consists of angle brackets and lag screws that are attached to key crossties and are used to support the crossdrains.
- Type III systems have a safety yellow or dark gray surface coat. This surface coat protects the pans from harmful UV degradation.
- Type III systems are available in isophthalic or general purpose polyester resin systems.

Type II & III General Arrangement Drawings

Drawing #B203-000-76 - #B203-000-80

Beginning on page 10 you will find copies of Type II and Type III General Arrangement Drawings. These drawings are to assist you in understanding how the pans fit and work together. You will notice a proprietary comment on each drawing. Please respect it! If you would like permission to incorporate one of our drawings into one of your drawings, please call the SynTechnics Sales Office for permission.

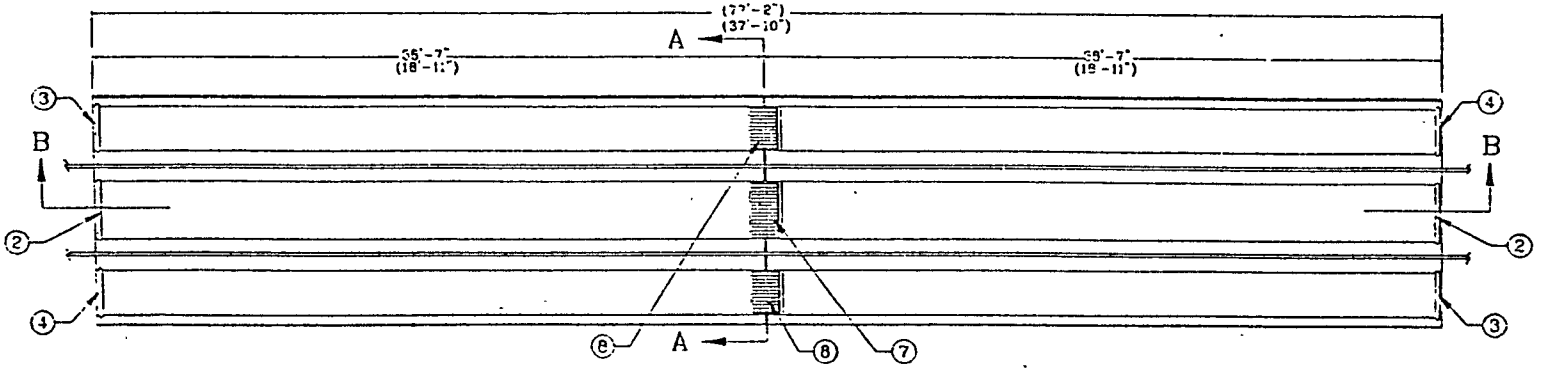

PLAN VIEW

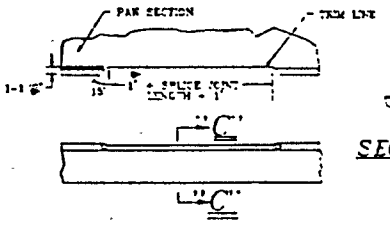

TRACK SPLICE JOINT TRIM DETAIL

(FIELD USE ONLY IF REQUIRED)

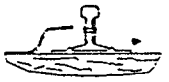

SECTION "C-C"

NOTE:

1. CROSSDRAINS MAY BE ROTATED 180° TO ACCOMODATE REQUIREMENTS.
2. DIMENSIONS SHOWN ABOVE FOR CENTERLINE OF CROSSDRAIN TO CENTERLINE OF CROSSDRAIN ARE LOCATED AT CENTERLINE OF TRACK.
3. SEE INSTALLATION MANUAL FOR INSTALLATION INSTRUCTIONS.

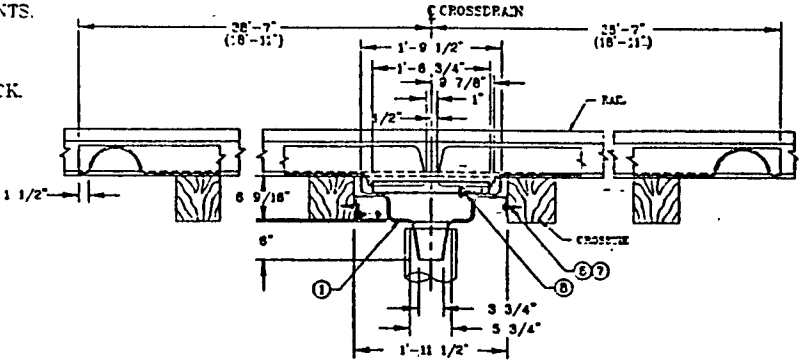

SECTION B-B

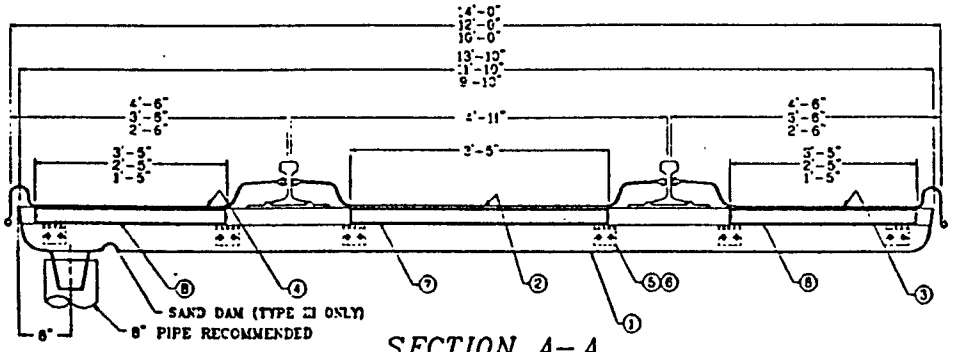

SECTION A-A

NOTE:

6 CROSSDRAIN SUPPORT ANGLES AND 16 LAG SCREWS REQUIRED FOR 9'-10" CROSSDRAIN.

12 CROSSDRAIN SUPPORT ANGLES AND 24 LAG SCREWS REQUIRED FOR 11'-10" AND 13'-10" CROSSDRAINS.

PROPERTY OF SYNTECHNICS

THIS PRINT OR DRAWING IS THE PROPERTY OF SYNTECHNICS AND IS CONFIDENTIAL OR PROPRIETARY INFORMATION. IT IS NOT TO BE COPIED, REPRODUCED, USED OR DISCLOSED, IN WHOLE OR IN PART, UNLESS IN REFERENCE TO CONTRACTS OR PROPOSALS OF THIS COMPANY. NOTHING DISCLOSED HEREIN WHICH IS NOT PUBLICLY AVAILABLE MAY BE USED WITHOUT WRITTEN PERMISSION.

** VARIES ACCORDING TO SYSTEM LAYOUT

ITEM	QTY	DESCRIPTION
8	2	CROSSDRAIN GRATING, ** X 1'-6 3/4", (FRP OR GALV STEEL)
7	1	CROSSDRAIN GRATING, 3'-5" X 1'-6 3/4", (FRP OR GALV STEEL)
6	**	LAG SCREW, 1/2" X 2 1/2", (ZINC PLATED)
5	**	CROSSDRAIN SUPPORT ANGLE, 3" X 3 1/2" X 1/4", (A36CS)
4	2	SIDE PAN W/DAMMED END, ** X 36'-0 1/2", LH, (FRP)
3	2	SIDE PAN W/DAMMED END, ** X 36'-0 1/2", RH, (FRP)
2	2	CENTER PAN W/DAMMED END, ??? X 36'-0 1/2", (FRP)
1	1	CROSSDRAIN, **, (FRP)

REV	DATE	BY	APPD	DESCRIPTION

SYNTECHNICS
A TRINITY INDUSTRIES, INC. COMPANY

700 TERRACE LANE
PADUCAH, KY.
42003
(502)898-7303

TITLE: SALES DRAWING
TYPE II AND III
FRP TRACK COLLECTOR PAN SYSTEM
GENERAL ARRANGEMENT & DETAIL

DRAWN	APPD	SCALE	DATE ISSUED	DR NO	SHEET	SHEET	REV
		NONE	4-26-96	A203-000-269	1	of 1	

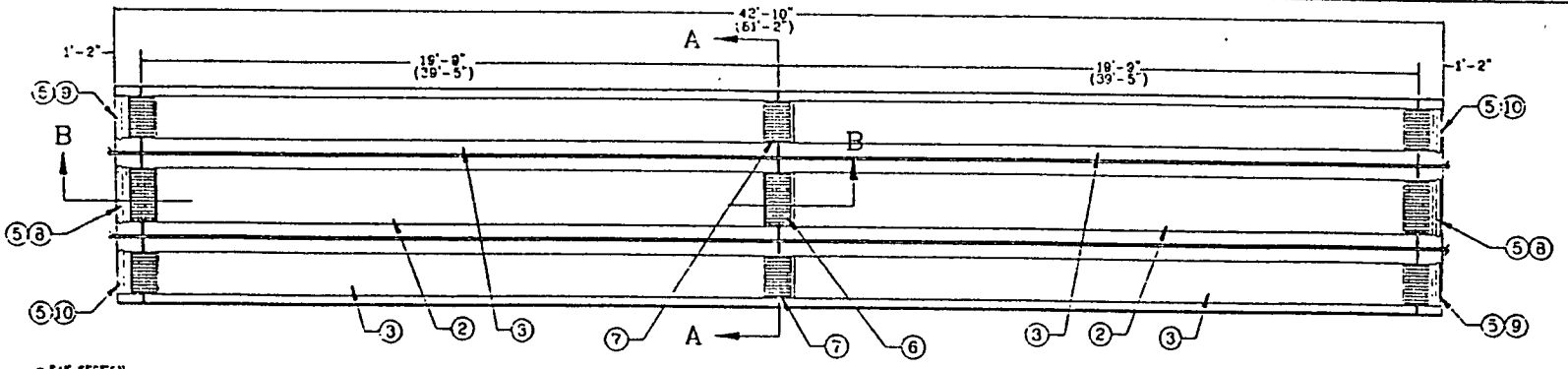

PLAN VIEW

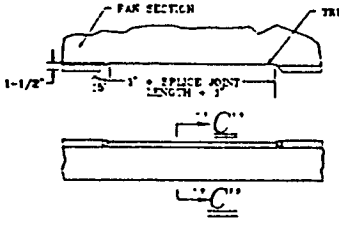

TRACK SPLICE JOINT TRIM DETAIL

(FIELD USE ONLY IF REQUIRED)

SECTION "C-C"

NOTE:

1. CROSSDRAINS MAY BE ROTATED 180° TO ACCOMODATE REQUIREMENTS.
2. DIMENSIONS SHOWN ABOVE FOR CENTERLINE OF CROSSDRAIN TO CENTERLINE OF CROSSDRAIN ARE LOCATED AT CENTERLINE OF TRACK.
3. SEE INSTALLATION MANUAL FOR INSTALLATION INSTRUCTIONS.

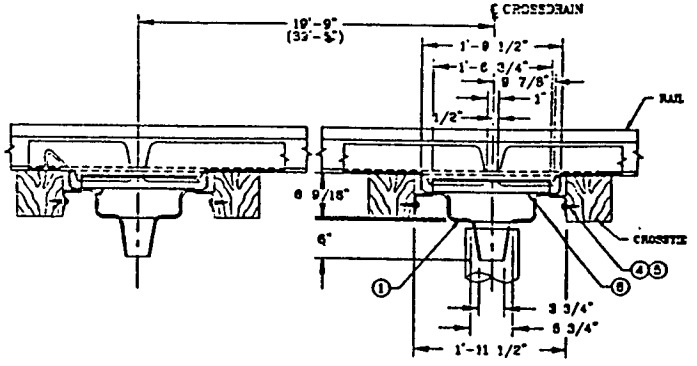

SECTION B-B

** VARIES ACCORDING TO SYSTEM LAYOUT

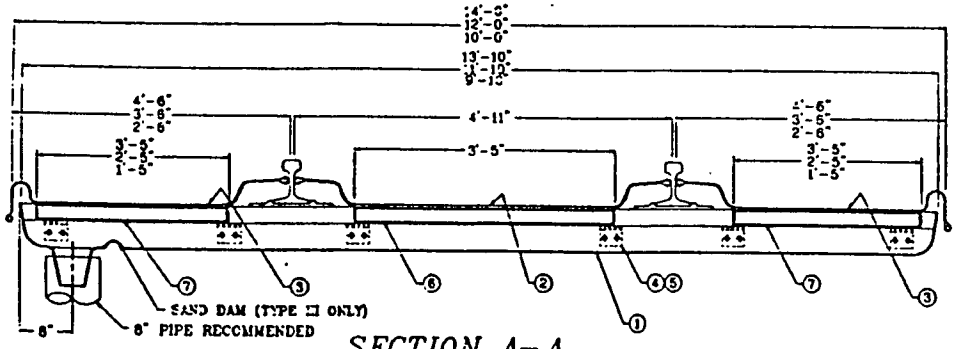

SECTION A-A

NOTE:

8 CROSSDRAIN SUPPORT ANGLES AND 16 LAG SCREWS REQUIRED FOR 9'-10" CROSSDRAIN.

12 CROSSDRAIN SUPPORT ANGLES AND 24 LAG SCREWS REQUIRED FOR 11'-10" AND 13'-10" CROSSDRAINS.

PROPERTY OF SYNTECHNICS

THIS PRINT OR DRAWING IS THE PROPERTY OF SYNTECHNICS AND IS CONFIDENTIAL OR PROPRIETARY INFORMATION. IT IS NOT TO BE COPIED, REPRODUCED, USED OR DISCLOSED, IN WHOLE OR IN PART, UNLESS IN REFERENCE TO CONTRACTS OR PROPOSALS OF THIS COMPANY. NOTHING DISCLOSED HEREIN WHICH IS NOT PUBLICLY AVAILABLE MAY BE USED WITHOUT WRITTEN PERMISSION.

ITEM	QTY	DESCRIPTION
10	2	SIDE END DAM, LH, (FRP)
9	2	SIDE END DAM, RH, (FRP)
8	2	CENTER END DAM, (FRP)
7	6	CROSSDRAIN GRATING, ** X 1'-6 3/4", (FRP OR GALV STEEL)
6	3	CROSSDRAIN GRATING, 3'-5" X 1'-6 3/4", (FRP OR GALV STEEL)
5	**	LAG SCREW, 1/2" X 2 1/2", (ZINC PLATED)
4	**	CROSSDRAIN SUPPORT ANGLE, 3" X 3 1/2" X 1/4", (A36CS)
3	4	SIDE PAN, ** X 39'-4", (FRP)
2	2	CENTER PAN, STD X 39'-4", (FRP)
1	1	CROSSDRAIN, **, (FRP)

REV	DATE	BY	APP'D	DESCRIPTION

SYNTECHNICS
A TRINITY INDUSTRIES, INC. COMPANY
700 TERRACE LANE
PADUCAH, KY.
42003
(502)898-7303

TITLE

SALES DRAWING TYPE II AND III FRP TRACK COLLECTOR PAN SYSTEM

GENERAL ARRANGEMENT & DETAIL

DRAWN	APP'D	SCALE	DATE ISSUED	DWG NO	SHEET NUMBER	REV
GW	DJS	NONE	4-26-98	A203-000-270	1 of 1	

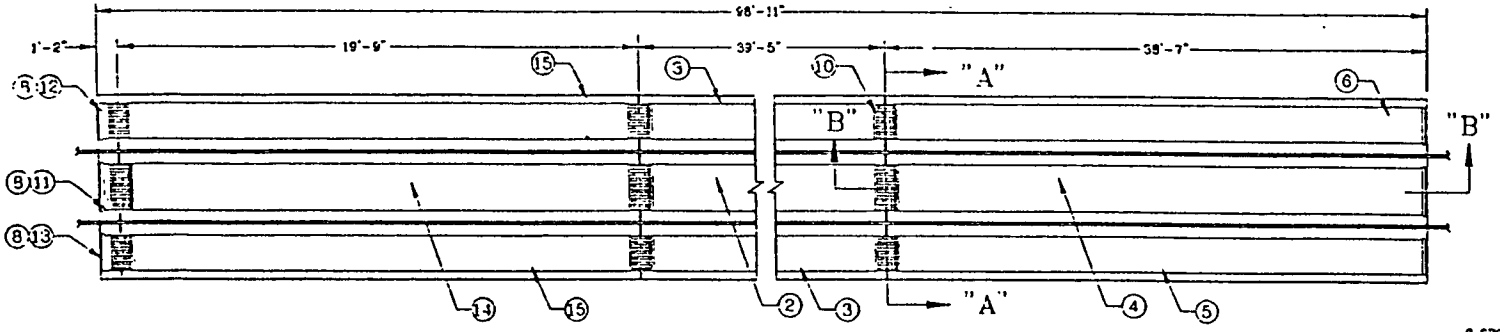

PLAN VIEW

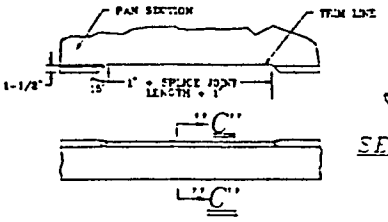

TRACK SPLICE JOINT TRIM DETAIL

(FIELD USE ONLY IF REQUIRED)

SECTION "C-C"

NOTE:

1. CROSSDRAINS MAY BE ROTATED 180° TO ACCOMODATE REQUIREMENTS.
2. DIMENSIONS SHOWN ABOVE FOR CENTERLINE OF CROSSDRAIN TO CENTERLINE OF CROSSDRAIN ARE LOCATED AT CENTERLINE OF TRACK.
3. SEE INSTALLATION MANUAL FOR INSTALLATION INSTRUCTIONS.

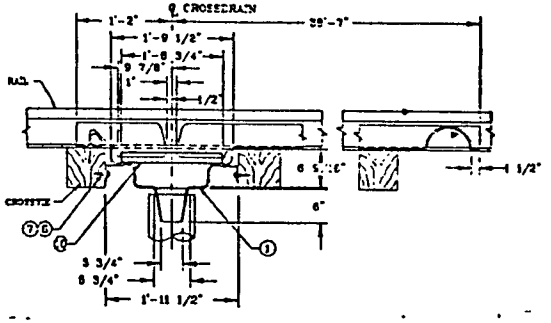

SECTION "B – B"

** VARIES ACCORDING TO SYSTEM LAYOUT

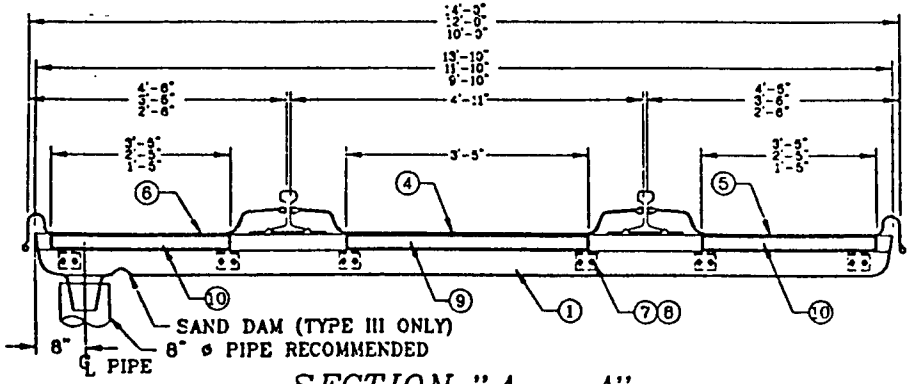

SECTION "A – A"

NOTE:

8 CROSSDRAIN SUPPORT ANGLES AND 16 LAG SCREWS REQUIRED FOR 9'-10" CROSSDRAIN.

12 CROSSDRAIN SUPPORT ANGLES AND 24 LAG SCREWS REQUIRED FOR 11'-10" AND 13'-10" CROSSDRAIN.

PROPERTY OF SYNTECHNICS

THIS PRINT OR DRAWING IS THE PROPERTY OF SYNTECHNICS, AND IS CONFIDENTIAL OR PROPRIETARY INFORMATION. IT IS NOT TO BE COPIED, REPRODUCED, USED OR DISCLOSED IN WHOLE OR IN PART, UNLESS IN REFERENCE TO CONTRACTS OR PROPOSALS OF THIS COMPANY. NOTHING DISCLOSED HEREIN WHICH IS NOT PUBLICLY AVAILABLE MAY BE USED WITHOUT WRITTEN PERMISSION.

ITEM	QTY	DESCRIPTION
15	2	SIDE PAN, ** X 19'-8", (FRP)
14	1	CENTER PAN, STD. X 19'-8", (FRP)
13	1	SIDE END DAM, ** X 1'-2", LH, (FRP)
12	1	SIDE END DAM, ** X 1'-2", RH, (FRP)
11	1	CENTER END DAM, STD. X 1'-2", (FRP)
10	6	CROSSDRAIN GRATING, ** X 1'-8 3/4", (FRP OR GALV STEEL)
9	3	CROSSDRAIN GRATING, 3'-5" X 1'-8 3/4", (FRP OR GALV STEEL)
8	**	LAG SCREW, 1/2" X 2 1/2", (ZINC PLATED)
7	**	CROSSDRAIN SUPPORT ANGLE, 3" X 3 1/2" X 1/4", (A36CS)
6	1	SIDE PAN W/DAMMED END, ** X 38'-8 1/2", LH, (FRP)
5	1	SIDE PAN W/DAMMED END, ** X 38'-8 1/2", RH, (FRP)
4	1	CENTER W/DAMMED END, STD. X 38'-8 1/2", (FRP)
3	2	SIDE PAN, ** X 39'-4", (FRP)
2	1	CENTER PAN, STD. X 39'-4", (FRP)
1	3	CROSSDRAIN, **, (FRP)

REV	DATE	BY	APPD	DESCRIPTION

SYNTECHNICS
A TRINITY INDUSTRIES, INC. COMPANY
700 TERRACE LANE
PADUCAH, KY.
42003
(502)898-7303

TITLE: SALES DRAWING
TYPE II AND III
FRP TRACK COLLECTOR PAN SYSTEM
GENERAL ARRANGEMENT & DETAIL

DRAWN	APPD	SCALE	DATE ISSUED	DR NO	SHEET SHEET REV
	DB	NONE	4-26-96	A203-000-271	1 of 1

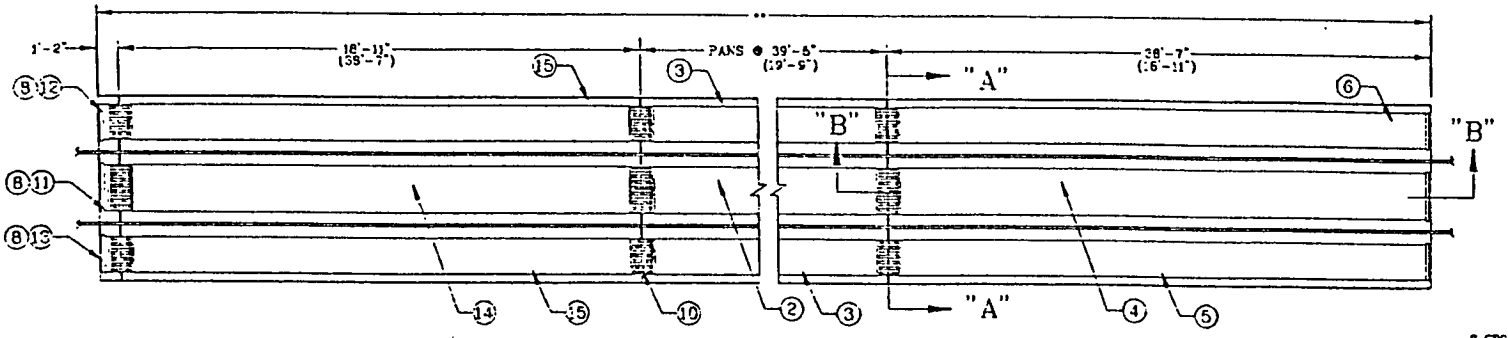

PLAN VIEW

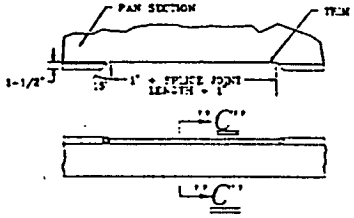

TRACK SPLICE JOINT TRIM DETAIL

(FIELD USE ONLY IF REQUIRED)

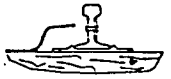

SECTION "C-C"

NOTE:

1. CROSSDRAINS MAY BE ROTATED 180° TO ACCOMODATE REQUIREMENTS.
2. DIMENSIONS SHOWN ABOVE FOR CENTERLINE OF CROSSDRAIN TO CENTERLINE OF CROSSDRAIN ARE LOCATED AT CENTERLINE OF TRACK.
3. SEE INSTALLATION MANUAL FOR INSTALLATION INSTRUCTIONS.

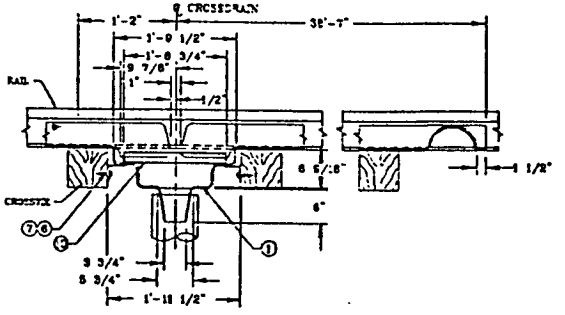

SECTION "B – B"

** VARIES ACCORDING TO SYSTEM LAYOUT

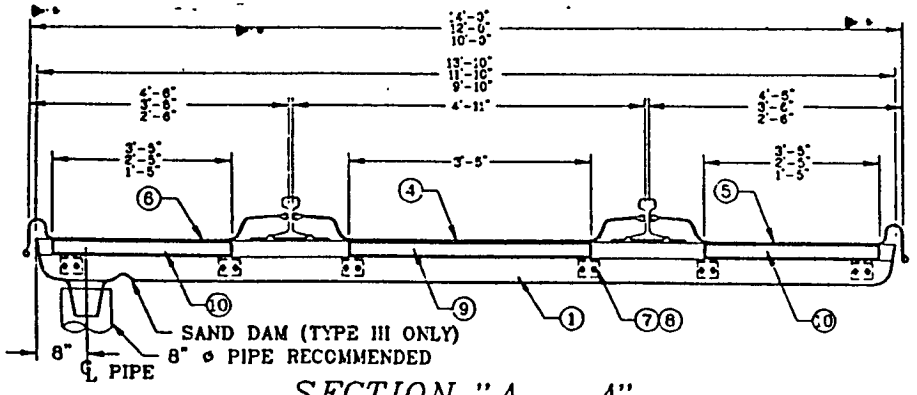

SECTION "A – A"

NOTE:

8 CROSSDRAIN SUPPORT ANGLES AND 16 LAG SCREWS REQUIRED FOR 9'-10" CROSSDRAIN.

12 CROSSDRAIN SUPPORT ANGLES AND 24 LAG SCREWS REQUIRED FOR 11'-10" AND 13'-10" CROSSDRAIN.

ITEM	QTY	DESCRIPTION
15	**	SIDE PAN, ** X 19'-8", (FRP)
14	**	CENTER PAN, STD. X 19'-8", (FRP)
13	1	SIDE END DAM, ** X 1'-2", LH, (FRP)
12	1	SIDE END DAM, ** X 1'-2", RH, (FRP)
11	1	CENTER END DAM, STD. X 1'-2", (FRP)
10	**	CROSSDRAIN GRATING, ** X 1'-6 3/4", (FRP OR GALV STEEL)
9	**	CROSSDRAIN GRATING, 3'-6" X 1'-6 3/4", (FRP OR GALV STEEL)
8	**	LAG SCREW, 1/2" X 2 1/2", (ZINC PLATED)
7	**	CROSSDRAIN SUPPORT ANGLE, 3" X 3 1/2" X 1/4", (A36CS)
6	**	SIDE PAN W/DAMMED END, ** X 38'-6 1/2", LH, (FRP)
5	**	SIDE PAN W/DAMMED END, ** X 38'-6 1/2", RH, (FRP)
4	**	CENTER PAN W/DAMMED END, STD. X 38'-6 1/2", (FRP)
3	**	SIDE PAN, ** X 39'-4", (FRP)
2	**	CENTER PAN, STD. X 39'-4", (FRP)
1	**	CROSSDRAIN, **, (FRP)

PROPERTY OF SYNTECHNICS

THIS PRINT OR DRAWING IS THE PROPERTY OF SYNTECHNICS, AND IS CONFIDENTIAL OR PROPRIETARY INFORMATION. IT IS NOT TO BE COPIED, REPRODUCED, USED OR DISCLOSED IN WHOLE OR IN PART, UNLESS IN REFERENCE TO CONTRACTS OR PROPOSALS OF THIS COMPANY. NOTICE: DISCLOSED MATERIAL WHICH IS NOT PUBLICLY AVAILABLE MAY BE USED WITHOUT WRITTEN PERMISSION.

REV	DATE	BY	APP'D	DESCRIPTION

SYNTECHNICS
A TRINITY INDUSTRIES, INC. COMPANY
700 TERRACE LANE
PADUCAH, KY.
42003
(502)898-7303

TITLE: SALES DRAWING
TYPE II AND III
FRP TRACK COLLECTOR PAN SYSTEM
GENERAL ARRANGEMENT & DETAIL

DRAWN	APP'D	SCALE	DATE ISSUED	DR NO	SHEET	OF	REV
	DB	NONE	4-26-96	A203-000-272	1	1	

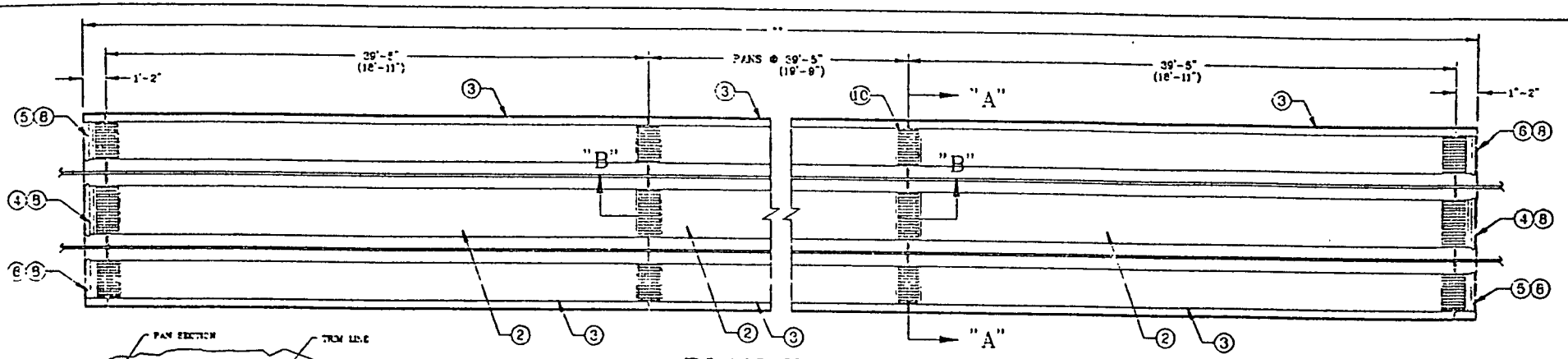

PLAN VIEW

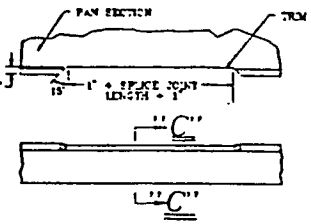

TRACK SPLICE JOINT TRIM DETAIL

(FIELD USE ONLY IF REQUIRED)

SECTION "C-C"

NOTE:

1. CROSSDRAINS MAY BE ROTATED 180° TO ACCOMODATE REQUIREMENTS
2. DIMENSIONS SHOWN ABOVE FOR CENTERLINE OF CROSSDRAIN TO CENTERLINE OF CROSSDRAIN ARE LOCATED AT CENTERLINE OF TRACK
3. SEE INSTALLATION MANUAL FOR INSTALLATION INSTRUCTIONS.

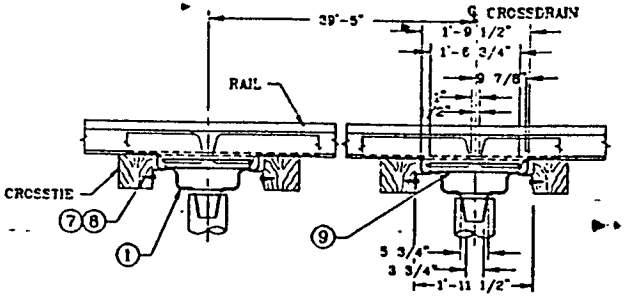

SECTION "B – B"

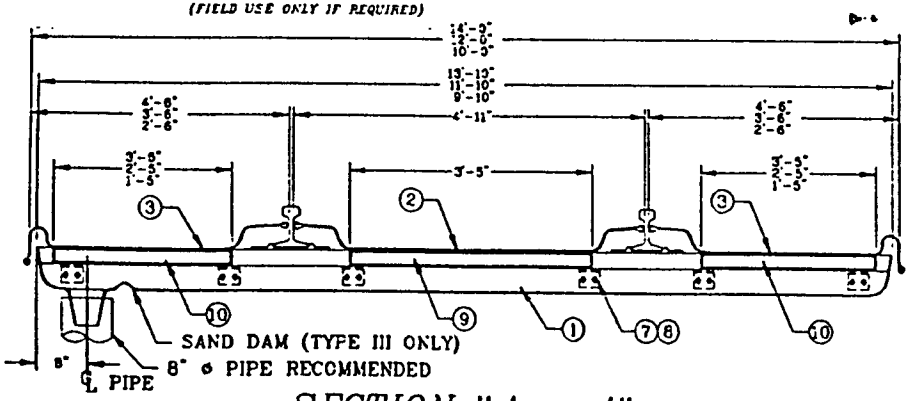

SECTION "A – A"

NOTE:

8 CROSSDRAIN SUPPORT ANGLES AND 16 LAG SCREWS REQUIRED FOR 9'-10" CROSSDRAIN.

12 CROSSDRAIN SUPPORT ANGLES AND 24 LAG SCREWS REQUIRED FOR 11'-10" AND 13'-10" CROSSDRAIN.

** VARIES ACCORDING TO SYSTEM LAYOUT

ITEM	QTY	DESCRIPTION
10	**	CROSSDRAIN GRATING, ** X 1'-6 3/4", (FRP OR GALV STEEL)
9	**	CROSSDRAIN GRATING, 3'-5" X 1'-6 3/4", (FRP OR GALV STEEL)
8	**	LAG SCREW, 1/2" X 2 1/2", (ZINC PLATED)
7	**	CROSSDRAIN SUPPORT ANGLE, 3" X 3 1/2" X 1/4", (A36CS)
6	2	SIDE END DAM, ** X 1'-2", LH, (FRP)
5	2	SIDE END DAM, ** X 1'-2", RH, (FRP)
4	2	CENTER END DAM, STD. X 1'-2", (FRP)
3	**	SIDE PAN, ** X 39'-4", (FRP)
2	**	CENTER PAN, STD. X 39'-4", (FRP)
1	**	CROSSDRAIN, **, (FRP)

PROPERTY OF SYNTECHNICS

THIS PRINT OR DRAWING IS THE PROPERTY OF SYNTECHNICS AND IS CONFIDENTIAL OR PROPRIETARY INFORMATION. IT IS NOT TO BE COPIED, REPRODUCED, USED OR DISCLOSED IN WHOLE OR IN PART, UNLESS IN REFERENCE TO CONTRACTS OR PROPOSALS OF THIS COMPANY NOTHING DISCLOSED HEREIN WHICH IS NOT PUBLICLY AVAILABLE MAY BE USED WITHOUT WRITTEN PERMISSION.

SYNTECHNICS
A TRINITY INDUSTRIES, INC. COMPANY
700 TERRACE LANE
PADUCAH, KY.
42003
(502)898-7303

REV	DATE	BY	APP'D	DESCRIPTION

TITLE: SALES DRAWING
TYPE II AND III
FRP TRACK COLLECTOR PAN SYSTEM
GENERAL ARRANGEMENT & DETAIL

DRAWN	APP'D	SCALE	DATE ISSUED	DR NO	SHEET	REV
0/4/	DS	NONE	4-26-96	A203-000-273	1 of 1	

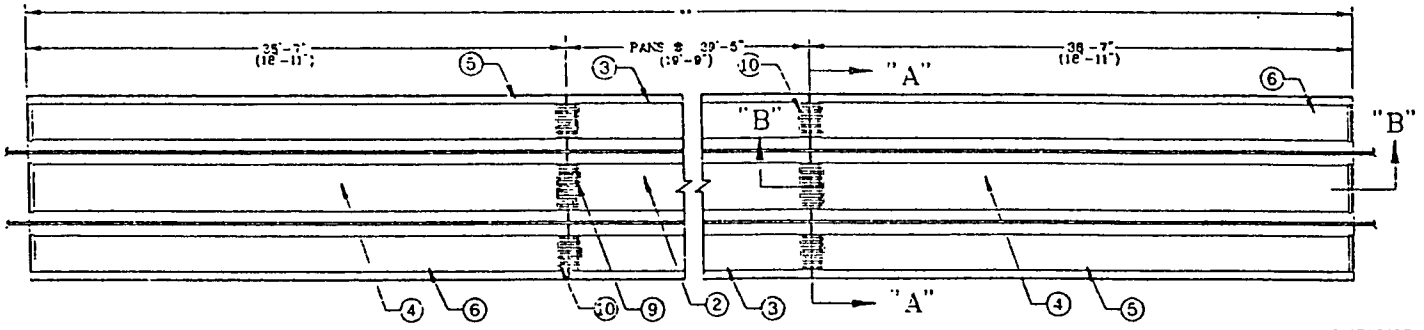

PLAN VIEW

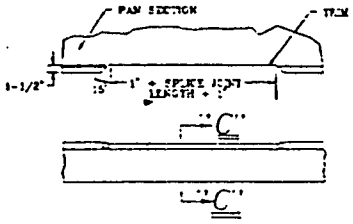

TRACK SPLICE JOINT TRIM DETAIL

(FIELD USE ONLY IF REQUIRED)

SECTION "C-C"

NOTE:

1. CROSSDRAINS MAY BE ROTATED 180° TO ACCOMODATE REQUIREMENTS.
2. DIMENSIONS SHOWN ABOVE FOR CENTERLINE OF CROSSDRAIN TO CENTERLINE OF CROSSDRAIN ARE LOCATED AT CENTERLINE OF TRACK.
3. SEE INSTALLATION MANUAL FOR INSTALLATION INSTRUCTIONS.

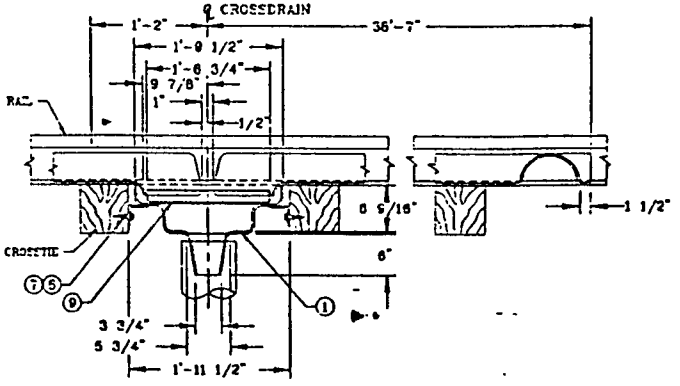

SECTION "B – B"

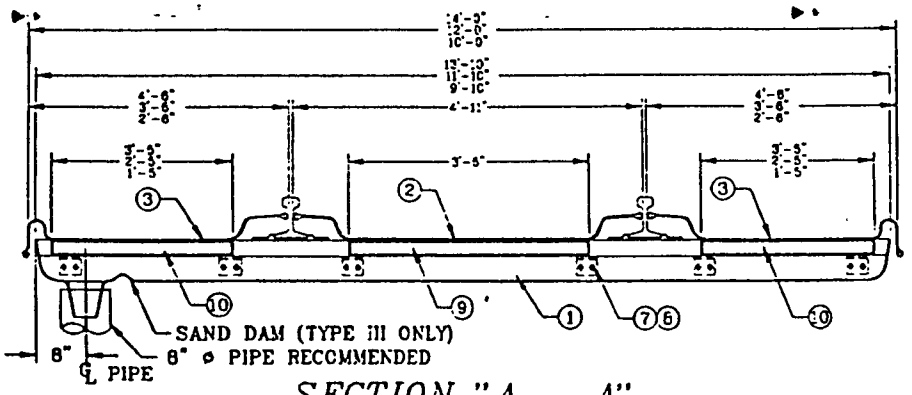

SECTION "A – A"

NOTE:

8 CROSSDRAIN SUPPORT ANGLES AND 16 LAG SCREWS REQUIRED FOR 9'-10" CROSSDRAIN.

12 CROSSDRAIN SUPPORT ANGLES AND 24 LAG SCREWS REQUIRED FOR 11'-10" AND 13'-10" CROSSDRAIN.

PROPERTY OF SYNTECHNICS

THIS PRINT OR DRAWING IS THE PROPERTY OF SYNTECHNICS, AND IS CONFIDENTIAL OR PROPRIETARY INFORMATION. IT IS NOT TO BE COPIED, REPRODUCED, USED OR DISCLOSED, IN WHOLE OR IN PART, UNLESS IN REFERENCE TO CONTRACTS OR PROPOSALS OF THIS COMPANY. NOTHING DISCLOSED HEREIN WHICH IS NOT PUBLICLY AVAILABLE MAY BE USED WITHOUT WRITTEN PERMISSION.

** VARIES ACCORDING TO SYSTEM LAYOUT

ITEM	QTY	DESCRIPTION
10	**	CROSSDRAIN GRATING, ** X 1'-6 3/4", (FRP OR GALV STEEL)
9	**	CROSSDRAIN GRATING, 3'-5" X 1'-6 3/4", (FRP OR GALV STEEL)
8	**	LAG SCREW, 1/2" X 2 1/2", (ZINC PLATED)
7	**	CROSSDRAIN SUPPORT ANGLE, 3" X 3 1/2" X 1/4", (A36CS)
6	2	SIDE PAN W/DAMMED END, ** X 38'-6 1/2", LH, (FRP)
5	2	SIDE PAN W/DAMMED END, ** X 38'-6 1/2", RH, (FRP)
4	2	CENTER PAN W/DAMMED END, STD. X 38'-6 1/2", (FRP)
3	**	SIDE PAN, ** X 39'-4", (FRP)
2	**	CENTER PAN, STD. X 39'-4", (FRP)
1	**	CROSSDRAIN, **, (FRP)

REV	DATE	BY	APP'D	DESCRIPTION

SYNTECHNICS
A TRINITY INDUSTRIES, INC. COMPANY
700 TERRACE LANE
PADUCAH, KY.
42003
(502)898-7303

TITLE: SALES DRAWING
TYPE II AND III
FRP TRACK COLLECTOR PAN SYSTEM
GENERAL ARRANGEMENT & DETAIL

DRAWN	APP'D	SCALE	DATE ISSUED	DWG NO	SHEET	REV
CJW	DJS	NONE	4-26-96	A203-000-274	1 of 1	

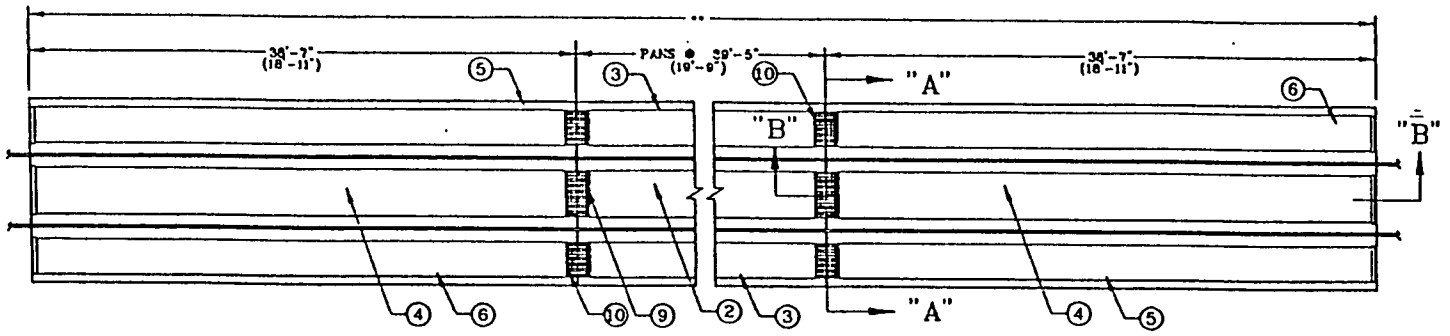

PLAN VIEW

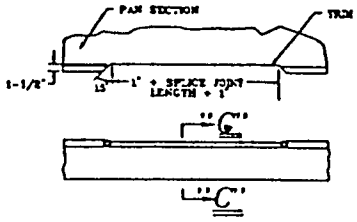

TRACK SPLICE JOINT TRIM DETAIL

(FIELD USE ONLY IF REQUIRED)

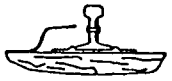

SECTION "C-C"

NOTE:

1. CROSSDRAINS MAY BE ROTATED 180° TO ACCOMODATE REQUIREMENTS.
2. DIMENSIONS SHOWN ABOVE FOR CENTERLINE OF CROSSDRAIN TO CENTERLINE OF CROSSDRAIN ARE LOCATED AT CENTERLINE OF TRACK.
3. SEE INSTALLATION MANUAL FOR INSTALLATION INSTRUCTIONS.

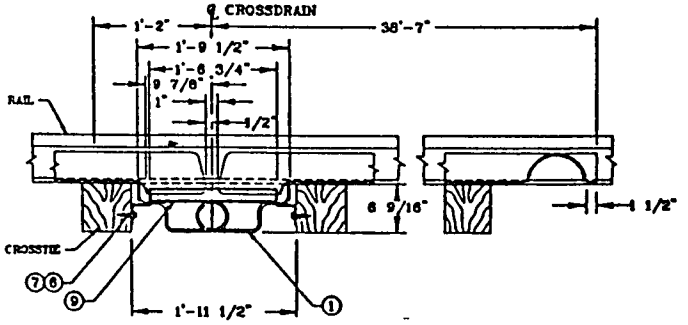

SECTION "B – B"

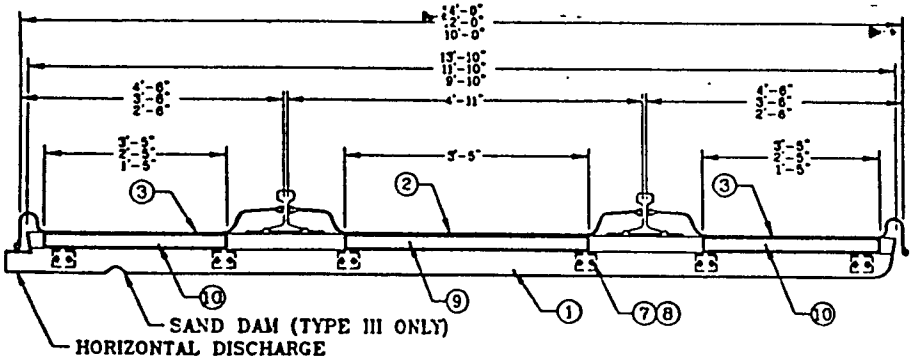

SECTION "A – A"

NOTE:

8 CROSSDRAIN SUPPORT ANGLES AND 16 LAG SCREWS REQUIRED FOR 9'-10" CROSSDRAIN.

12 CROSSDRAIN SUPPORT ANGLES AND 24 LAG SCREWS REQUIRED FOR 11'-10" AND 13'-10" CROSSDRAIN.

** VARIES ACCORDING TO SYSTEM LAYOUT

ITEM	QTY	DESCRIPTION
10	**	CROSSDRAIN GRATING, ** X 1'-6 3/4", (FRP OR GALV STEEL)
9	**	CROSSDRAIN GRATING, 3'-5" X 1'-6 3/4", (FRP OR GALV STEEL)
8	**	LAG SCREW, 1/2" X 2 1/2", (ZINC PLATED)
7	**	CROSSDRAIN SUPPORT ANGLE, 3" X 3 1/2" X 1/4", (A36CS)
6	2	SIDE PAN W/DAMMED END, ** X 38'-6 1/2", LH, (FRP)
5	2	SIDE PAN W/DAMMED END, ** X 38'-6 1/2", RH, (FRP)
4	2	CENTER PAN W/DAMMED END, STD. X 38'-6 1/2", (FRP)
3	**	SIDE PAN, ** X 38'-4", (FRP)
2	**	CENTER PAN, STD. X 38'-4", (FRP)
1	**	CROSSDRAIN W/HORIZONTAL DISCHARGE, **, (FRP)

PROPERTY OF SYNTECHNICS

THIS PRINT OR DRAWING IS THE PROPERTY OF SYNTECHNICS, AND IS CONFIDENTIAL OR PRO-PRIETARY INFORMATION. IT IS NOT TO BE COPIED, REPRODUCED, USED OR DISCLOSED IN WHOLE OR IN PART, UNLESS IN REFERENCE TO CONTRACTS OR PROPOSALS OF THIS COMPANY. NOTHING DISCLOSED HEREON WHICH IS NOT PUBLICLY AVAILABLE MAY BE USED WITHOUT WRITTEN PERMISSION.

REV	DATE	BY	APP'D	DESCRIPTION

SYNTECHNICS
A TRINITY INDUSTRIES, INC. COMPANY
700 TERRACE LANE
PADUCAH, KY.
42003
(502)898-7303

TITLE: SALES DRAWING
TYPE II AND III
FRP TRACK COLLECTOR PAN SYSTEM
WITH HORIZONTAL DISCHARGE
GENERAL ARRANGEMENT & DETAIL

DRAWN	APP'D BY	SCALE	DATE ISSUED	DR NO	SHEET	REV
		NONE	10-17-96	A203-000-285	1 of 1	

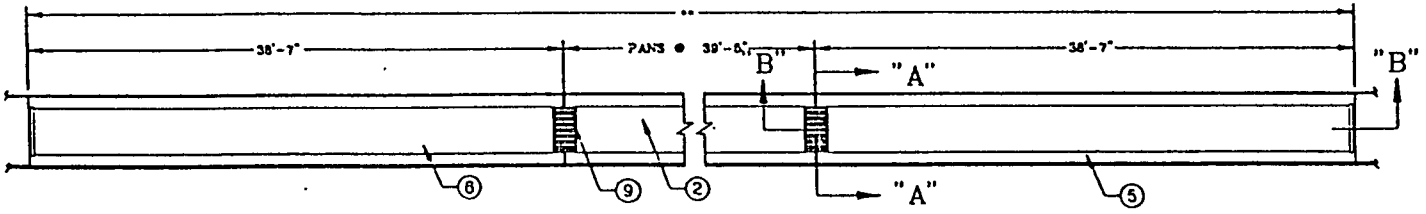

PLAN VIEW

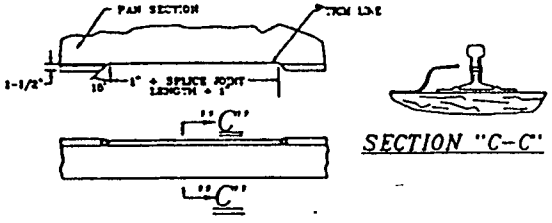

TRACK SPLICE JOINT TRIM DETAIL

(FIELD USE ONLY IF REQUIRED)

SECTION "C-C"

NOTE:

1. CROSSDRAINS MAY BE ROTATED 180° TO ACCOMODATE REQUIREMENTS.
2. DIMENSIONS SHOWN ABOVE FOR CENTERLINE OF CROSSDRAIN TO CENTERLINE OF CROSSDRAIN ARE LOCATED AT CENTERLINE OF TRACK.
3. SEE INSTALLATION MANUAL FOR INSTALLATION INSTRUCTIONS.

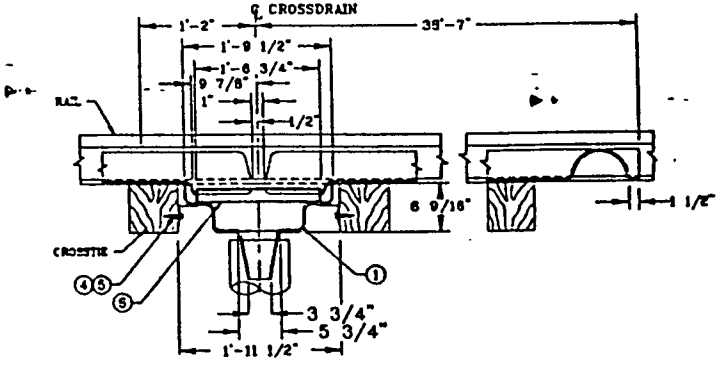

SECTION "B – B"

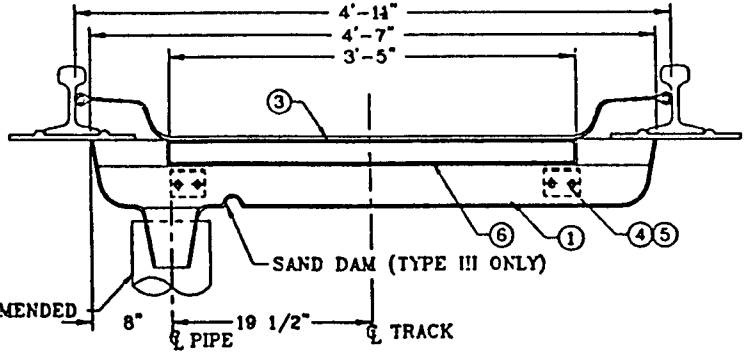

SECTION "A – A"

** VARIES ACCORDING TO SYSTEM LAYOUT

ITEM	QTY	DESCRIPTION
6	**	CROSSDRAIN GRATING, 5'-6" X 1'-6 3/4", (FRP OR GALV STEEL)
5	**	LAG SCREW, 1/2" X 2 1/2", (ZINC PLATED)
4	**	CROSSDRAIN SUPPORT ANGLE, 8" X 3 1/2" X 1/4", (A36CS)
3	2	CENTER PAN W/DAMMED END, STD. X 38'-8 1/2", (FRP)
2	**	CENTER PAN, STD. X 39'-4", (FRP)
1	**	CROSSDRAIN **, (FRP)

PROPERTY OF SYNTECHNICS

THIS PRINT OR DRAWING IS THE PROPERTY OF SYNTECHNICS, AND IS CONFIDENTIAL OR PROPRIETARY INFORMATION. IT IS NOT TO BE COPIED, REPRODUCED, USED OR DISCLOSED, IN WHOLE OR IN PART, UNLESS IN REFERENCE TO CONTRACTS OR PROPOSALS OF THIS COMPANY. NOTHING DISCLOSED HEREIN WHICH IS NOT PUBLICLY AVAILABLE MAY BE USED WITHOUT WRITTEN PERMISSION.

REV	DATE	BY	APP'D	DESCRIPTION

SYNTECHNICS
A TRINITY INDUSTRIES, INC. COMPANY
700 TERRACE LANE
PADUCAH, KY.
42003
(502)898-7303

TITLE
SALES DRAWING
TYPE II AND III
FRP TRACK COLLECTOR PAN SYSTEM
GENERAL ARRANGEMENT & DETAIL

DRAWN	APP'D	SCALE	DATE	DR NO	SHEET	SHEET
		NONE	12-20-96	A203-000-288	1	1

Type IV Characteristics

- Pan systems have a built in 1" per 10' slope that allows better drainage to crossdrains.
- For 20' nominal pan systems, a single male center pan is used that is 20'-0½" in total length. Only one crossdrain is required for a 20' nominal system.
- For 40' pan systems, one male and one female center pan is used. The female pan is 19'-11½" in length. When the two pans are "mated" in the center, the total length is the same as our Type II and III pans, 39'-5".
- Standard male side pan is 20'-0½" long and standard female side pan is 19'-11½" long. Either are available with a standard width of 2'-6", 3'-6", or 4'-6".
- Standard Crossdrain has a 9'-10", 11'-10", or 13'-10" width and is used between pans to join center and side pans and to provide a continuous system. The crossdrain is also used to link the track collector pan system with a pre-installed disposal system.
- Exterior Crossdrain has the same widths as the standard crossdrain but is used at the end of a system where a crossdrain is required. The exterior crossdrain also links the track collector pan system with a pre-installed disposal system.
- The End Dam Set consists of one center and two side pan end dams and is used on the outside of a system requiring an exterior crossdrain.
- Grating Assemblies consist of three pieces of FRP Grating that cover each crossdrain and are used for a walk area across the track collector pan system.
- The Hardware Package consists of angle brackets and lag screws that are attached to key crossties and are used to support the crossdrains.
- For a 20' nominal pan system nine grade supports combined with pea gravel supplied by others are used to provide support below the surface of the sloped pans.
- For a 40' nominal pan system fifteen grade supports combined with pea gravel supplied by others are used to provide support below the surface of the sloped pans. Systems longer than 40' will use either three or five grade supports between each crossdrain depending on the length of the system.
- Type IV systems have a UV inhibitor in the resin to protect from harmful UV degradation.
- Type IV pans are available in vinyl ester or isophthalic polyester resins.

Type V Characteristics

- Pan systems have a built in 1" per 10' slope that allows better drainage to crossdrains.
- For 20' nominal pan systems, a single male center pan is used that is 20'-0½" in total length. Only one crossdrain is required for a 20' nominal system.
- For 40' pan systems, one male and one female center pan is used. The female pan is 19'-11½" in length. When the two pans are "mated" in the center, the total length is the same as our Type II and III pans, 39'-5".
- Standard male side pan is 20'-0½" long and standard female side pan is 19'-11½" long. Either are available with a standard width of 2'-6", 3'-6", or 4'-6".
- Standard Crossdrain has a 9'-10", 11'-10", or 13'-10" standard width and is used between pans to join center and side pans and to provide a continuous system. The crossdrain is also used to link the track collector pan system with a pre-installed disposal system.
- Exterior Crossdrain has the same widths as the standard crossdrain but is used at the end of a system where a crossdrain is required. The exterior crossdrain also links the track collector pan system with a pre-installed disposal system.
- The End Dam Set consists of one center and two side pan end dams and is used on the outside of a system requiring an exterior crossdrain.
- Grating Assemblies consist of three pieces of FRP Grating that cover each crossdrain and are used for a walk area across the track collector pan system.
- The Hardware Package consists of angle brackets and lag screws that are attached to key crossties and are used to support the crossdrains.
- For a 20' nominal pan system nine grade supports combined with pea gravel supplied by others are used to provide support below the surface of the sloped pans.
- For a 40' nominal pan system fifteen grade supports combined with pea gravel supplied by others are used to provide support below the surface of the sloped pans. Systems longer than 40' will use either three or five grade supports between each crossdrain depending on the length of the system.
- Type V systems have a safety yellow or dark gray surface coat. This surface coat protects the pans from harmful UV degradation.
- Type V systems are available in isophthalic or general purpose polyester resin systems.

Type IV & V General Arrangement Drawings

Drawing #B215-000-11 - #B215-000-13

Beginning on page 18 you will find copies of Type IV and Type V General Arrangement Drawings. These drawings are to assist you in understanding how the pans fit and work together. You will notice a proprietary comment on each drawing. Please respect it! If you would like permission to incorporate one of our drawings into one of your drawings, please call the SynTechnics Sales Office for permission.

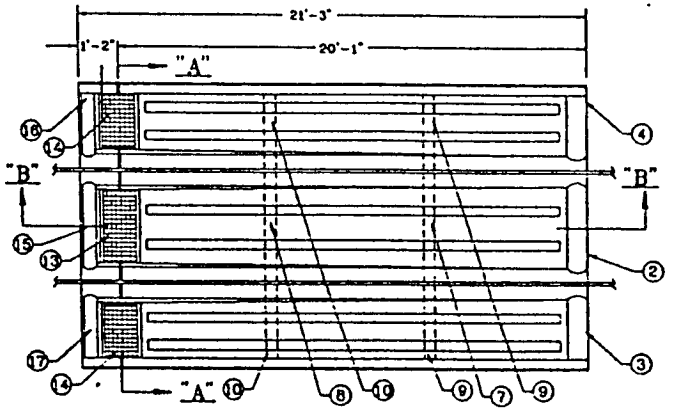

PLAN VIEW

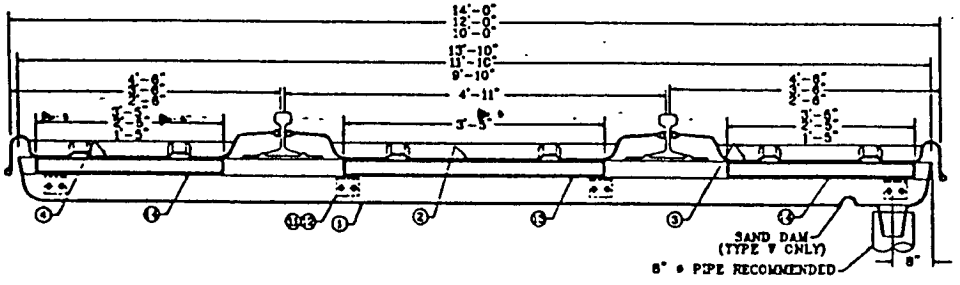

SECTION "A – A"

NOTE:

1. CROSSDRAINS MAY BE ROTATED 180° TO ACCOMODATE REQUIREMENTS.
2. DIMENSIONS SHOWN ABOVE FOR CENTERLINE OF CROSSDRAIN TO CENTERLINE OF CROSSDRAIN ARE LOCATED AT CENTERLINE OF TRACK.
3. SEE INSTALLATION MANUAL FOR INSTALLATION INSTRUCTIONS.

** VARIES ACCORDING TO SYSTEM LAYOUT.

ITEM	QTY.	DESCRIPTION
17	1	SIDE END DAM, ** X 1'-2", LH (FRP)
16	1	SIDE END DAM, ** X 1'-2", RH (FRP)
15	1	CENTER END DAM, STD. X 1'-2", (FRP)
14	2	GRATING, CROSSDRAIN, ** X 1'-6 3/4", (FRP OR GALV STEEL)
13	1	GRATING, CROSSDRAIN, 3'-5" X 1'-6 3/4", (FRP OR GALV STEEL)
12	**	LAG SCREW, 1/2" X 2 1/2"
11	**	CROSSDRAIN SUPPORT ANGLE
10	2	INTERMEDIATE GRADE/SUPPORT STRIPS, ** SIDE PAN, LOW, (FRP)
9	2	INTERMEDIATE GRADE/SUPPORT STRIPS, ** SIDE PAN, HIGH, (FRP)
8	1	INTERMEDIATE GRADE/SUPPORT STRIPS, CENTER PAN, LOW, (FRP)
7	1	INTERMEDIATE GRADE/SUPPORT STRIPS, CENTER PAN, HIGH, (FRP)
6	2	CENTER SUPPORT, ** SIDE PAN, (FRP)
5	1	CENTER SUPPORT, CENTER PAN, (FRP)
4	1	SIDE PAN, W/END DAM, ** X 20'-0 1/2", LH, (FRP)
3	1	SIDE PAN, W/END DAM, ** X 20'-0 1/2", RH, (FRP)
2	1	CENTER PAN, W/END DAM, STD. X 20'-0 1/2", (FRP)
1	1	CROSSDRAIN, **, (FRP)

NOTE:

8 CROSSDRAIN SUPPORT ANGLES AND 16 LAG SCREWS REQUIRED FOR 9'-10" CROSSDRAIN.

12 CROSSDRAIN SUPPORT ANGLES AND 24 LAG SCREWS REQUIRED FOR 11'-10" AND 13'-10" CROSSDRAIN.

PROPERTY OF SYNTECHNICS

THIS PRINT OR DRAWING IS THE PROPERTY OF SYNTECHNICS, AND IS CONFIDENTIAL OR PROPRIETARY INFORMATION. IT IS NOT TO BE COPIED, REPRODUCED, USED OR DISCLOSED, IN WHOLE OR IN PART, UNLESS IN REFERENCE TO CONTRACTS OR PROPOSALS OF THIS COMPANY. NOTHING DISCLOSED HEREIN WHICH IS NOT PUBLICLY AVAILABLE MAY BE USED WITHOUT WRITTEN PERMISSION.

REV	DATE	BY	APP'D	DESCRIPTION

SYNTECHNICS
A TRINITY INDUSTRIES, INC. COMPANY
709 TERRACE LANE
PADUCAH, KY.
42003
(502)898-7303

TITLE
SALES DRAWING
TYPE IV AND V
FRP TRACK COLLECTOR PAN SYSTEM W/END DAMS
GENERAL ARRANGEMENT & DETAIL

DRAWN	APP'D	SCALE	DATE	DWG No.	SHEET
Cfw	JTS	NONE	4-26-96	A215-000-36	1 of 2

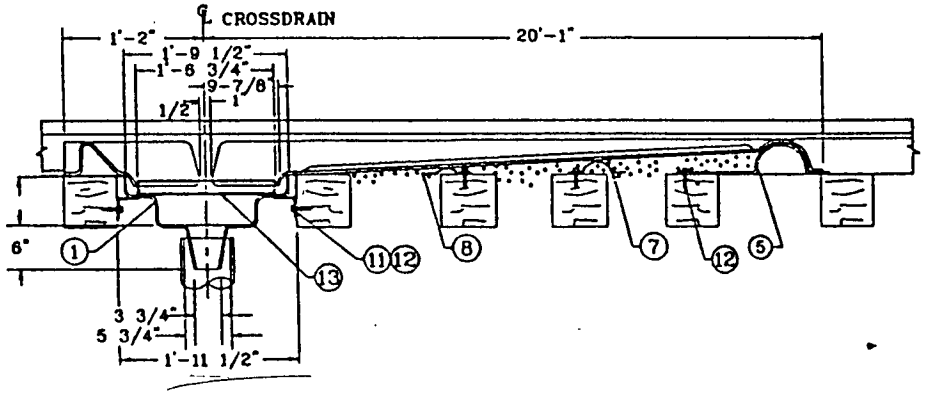

SECTION "B – B"

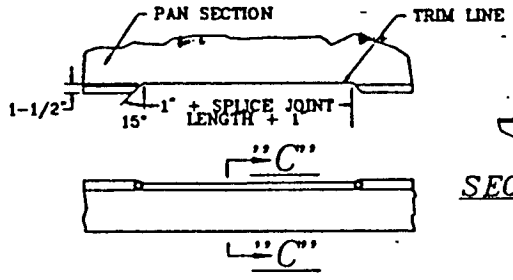

SECTION "C–C"

TRACK SPLICE JOINT TRIM DETAIL

(FIELD USE ONLY IF REQUIRED)

PROPERTY OF
SYNTECHNICS
THIS PRINT OR DRAWING IS THE PROPERTY OF SYNTECHNICS AND IS CONFIDENTIAL OR PROPRIETARY INFORMATION. IT IS NOT TO BE COPIED, REPRODUCED, USED OR DISCLOSED, IN WHOLE OR IN PART, UNLESS IN REFERENCE TO CONTRACTS OR PROPOSALS OF THIS COMPANY. NOTHING DISCLOSED HEREIN WHICH IS NOT PUBLICLY AVAILABLE MAY BE USED WITHOUT WRITTEN PERMISSION.

REV	DATE	BY	APPD	DESCRIPTION

SYNTECHNICS
A TRINITY INDUSTRIES, INC. COMPANY
700 TERRACE LANE
PADUCAH, KY.
42003
(502)898-7303

TITLE
SALES DRAWING
TYPE IV AND V
FRP TRACK COLLECTOR PAN SYSTEM W/END DAMS
GENERAL ARRANGEMENT & DETAIL

DRAWN	APPD	SCALE	DATE	DR NO	SHEET
GW	GS	NONE	4-26-96	A215-000-36	2 of 2

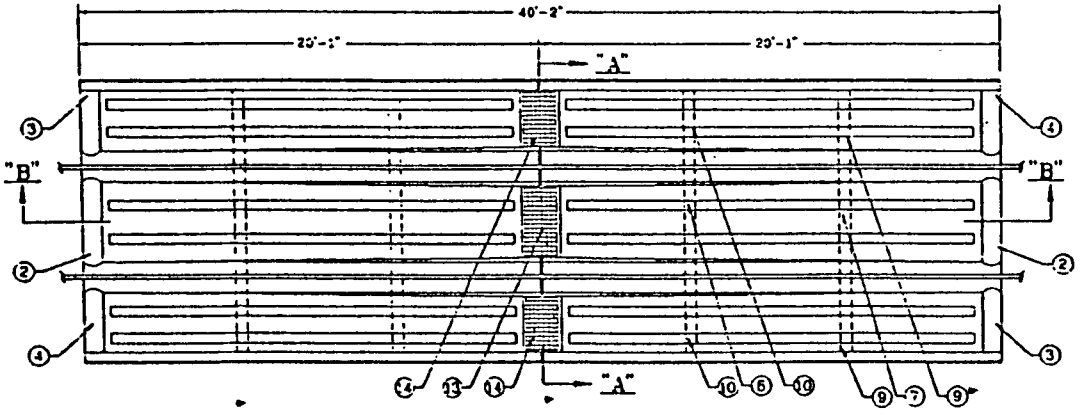

PLAN VIEW

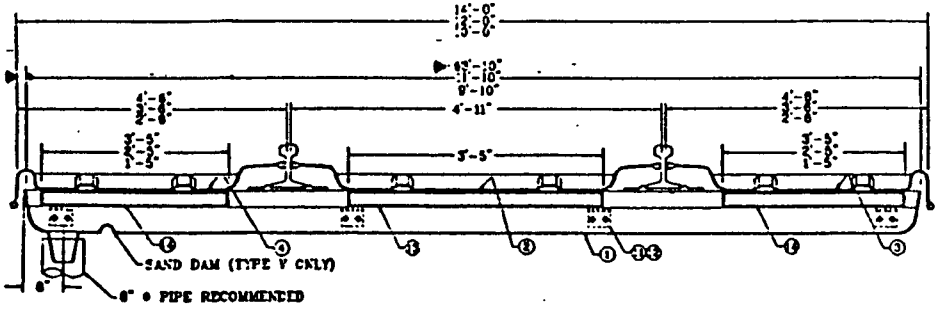

SECTION "A – A"

NOTE:

8 CROSSDRAIN SUPPORT ANGLES AND 16 LAG SCREWS REQUIRED FOR 9'-10" CROSSDRAIN.

12 CROSSDRAIN SUPPORT ANGLES AND 24 LAG SCREWS REQUIRED FOR 11'-10" AND 13'-10" CROSSDRAIN.

NOTE:

1. CROSSDRAINS MAY BE ROTATED 180° TO ACCOMODATE REQUIREMENTS.
2. DIMENSIONS SHOWN ABOVE FOR CENTERLINE OF CROSSDRAIN TO CENTERLINE OF CROSSDRAIN ARE LOCATED AT CENTERLINE OF TRACK.
3. SEE INSTALLATION MANUAL FOR INSTALLATION INSTRUCTIONS.

** VARIES ACCORDING TO SYSTEM LAYOUT.

ITEM	QTY	DESCRIPTION
14	**	GRATING, CROSSDRAIN, ** X 1'-6 3/4", (FRP OR GALV STEEL)
13	**	GRATING, CROSSDRAIN, 3'-5" X 1'-6 3/4", (FRP OR GALV STEEL)
12	**	LAG SCREW, 1/2" X 2 1/2"
11	**	CROSSDRAIN SUPPORT ANGLE
10	4	INTERMEDIATE GRADE/SUPPORT STRIPS, ** SIDE PAN, LOW, (FRP)
9	4	INTERMEDIATE GRADE/SUPPORT STRIPS, ** SIDE PAN, HIGH, (FRP)
8	2	INTERMEDIATE GRADE/SUPPORT STRIPS, CENTER PAN, LOW, (FRP)
7	2	INTERMEDIATE GRADE/SUPPORT STRIPS, CENTER PAN, HIGH, (FRP)
6	4	CENTER SUPPORT, ** SIDE PAN, (FRP)
5	2	CENTER SUPPORT, CENTER PAN, (FRP)
4	2	SIDE PAN, W/END DAM, ** X 20'-0 1/2", LH, (FRP)
3	2	SIDE PAN, W/END DAM, ** X 20'-0 1/2", RH, (FRP)
2	2	CENTER PAN, W/END DAM, STD. X 20'-0 1/2", (FRP)
1	1	CROSSDRAIN, **, (FRP)

PROPERTY OF SYNTECHNICS

THIS PRINT OR DRAWING IS THE PROPERTY OF SYNTECHNICS AND IS CONFIDENTIAL OR PROPRIETARY INFORMATION. IT IS NOT TO BE COPIED, REPRODUCED, USED OR DISCLOSED IN WHOLE OR IN PART, UNLESS IN REFERENCE TO CONTRACTS OR PROPOSALS OF THE COMPANY. NOTHING DISCLOSED HEREIN WHICH IS NOT PUBLICLY AVAILABLE MAY BE USED WITHOUT WRITTEN PERMISSION.

REV	DATE	BY	APP'D	DESCRIPTION

SYNTECHNICS
A TRINITY INDUSTRIES, INC. COMPANY
700 TERRACE LANE
PADUCAH, KY.
42003
(502)898-7303

TITLE: SALES DRAWING
TYPE IV AND V
FRP TRACK COLLECTOR PAN SYSTEM W/END DAMS
GENERAL ARRANGEMENT & DETAIL

DRAWN	APP'D	SCALE	DATE	DR NO	SHEET	REV
		NONE	4-26-96	A215-000-37	1 of 2	

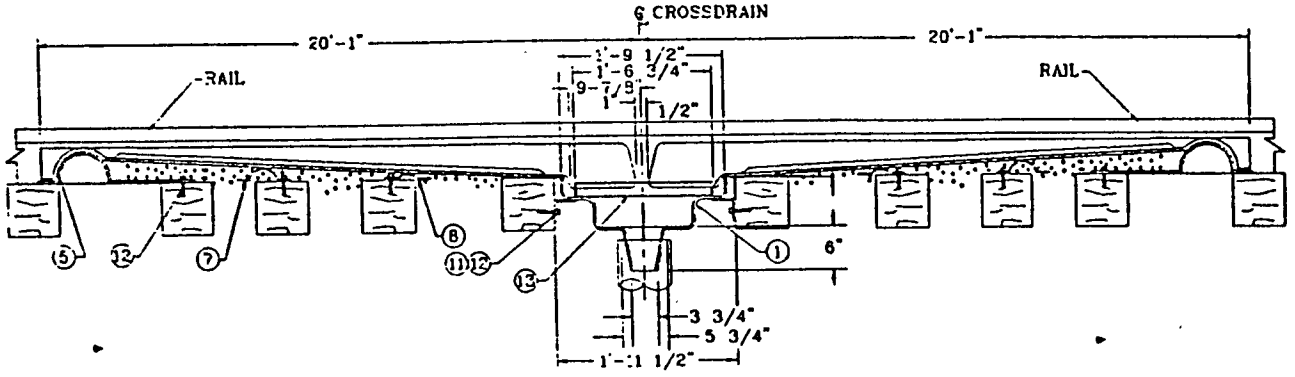

SECTION "B – B"

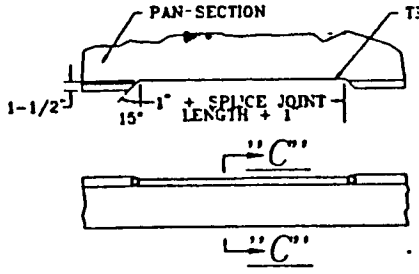

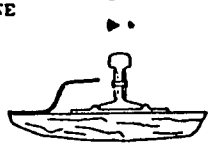

SECTION "C-C"

TRACK SPLICE JOINT TRIM DETAIL

(FIELD USE ONLY IF REQUIRED)

PROPERTY OF SYNTECHNICS

THIS PRINT OR DRAWING IS THE PROPERTY OF SYNTECHNICS, AND IS CONFIDENTIAL OR PROPRIETARY INFORMATION. IT IS NOT TO BE COPIED, REPRODUCED, USED OR DISCLOSED IN WHOLE OR IN PART, UNLESS IN REFERENCE TO CONTRACTS OR PROPOSALS OF THIS COMPANY. NOTHING DISCLOSED HEREIN WHICH IS NOT PUBLICLY AVAILABLE MAY BE USED WITHOUT WRITTEN PERMISSION.

REV	DATE	BY	APP'D	DESCRIPTION

SYNTECHNICS
A TRINITY INDUSTRIES, INC. COMPANY
700 TERRACE LANE
PADUCAH, KY.
42003
(502)898-7303

TITLE: SALES DRAWING TYPE IV AND V
FRP TRACK COLLECTOR PAN SYSTEM W/END DAMS
GENERAL ARRANGEMENT & DETAIL

DRAWN	APP'D	SCALE	DATE ISSUED	JOB NO	SHEET / SHEETS	REV
	DS	NONE	4-26-96	A215-000-37	2 of 2	

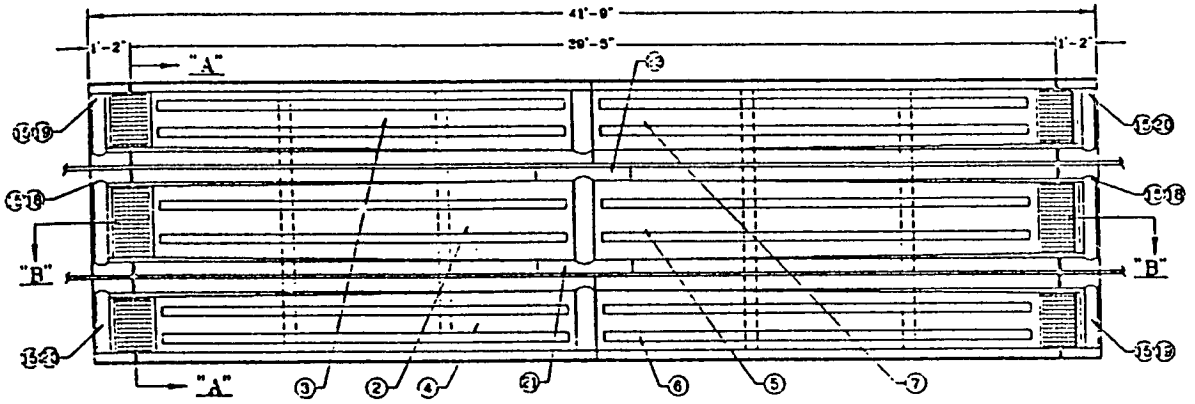

PLAN VIEW

NOTE:

1. CROSSDRAINS MAY BE ROTATED 180° TO ACCOMODATE REQUIREMENTS.
2. DIMENSIONS SHOWN ABOVE FOR CENTERLINE OF CROSSDRAIN TO CENTERLINE OF CROSSDRAIN ARE LOCATED AT CENTERLINE OF TRACK.
3. SEE INSTALLATION MANUAL FOR INSTALLATION INSTRUCTIONS.

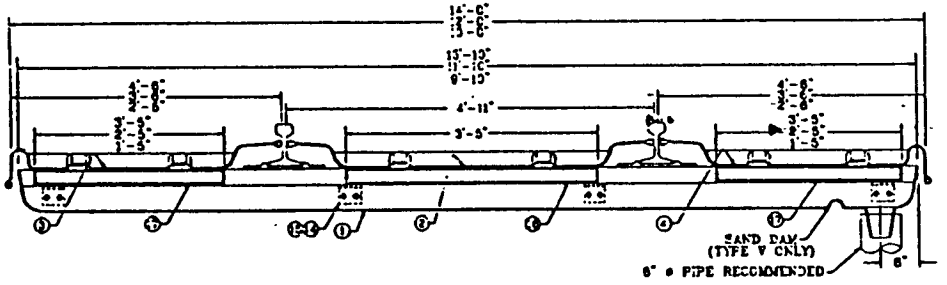

SECTION "A - A"

NOTE:

8 CROSSDRAIN SUPPORT ANGLES AND 16 LAG SCREWS REQUIRED FOR 9'-10" CROSSDRAIN.

12 CROSSDRAIN SUPPORT ANGLES AND 24 LAG SCREWS REQUIRED FOR 11'-10" AND 13'-10" CROSSDRAIN.

** VARIES ACCORDING TO SYSTEM LAYOUT.

ITEM	QTY	DESCRIPTION
22	1	JOINT FLASHING, CENTER PAN, LH, (FRP)
21	1	JOINT FLASHING, CENTER PAN, RH, (FRP)
20	2	SIDE END DAM, ** X 1'-2", LH (FRP)
19	2	SIDE END DAM, ** X 1'-2", RH (FRP)
18	2	CENTER END DAM, STD. X 1'-2", (FRP)
17	4	GRATING, CROSSDRAIN, ** X 1'-6 3/4", (FRP OR GALV STEEL)
16	2	GRATING, CROSSDRAIN, 3'-5" X 1'-6 3/4", (FRP OR GALV STEEL)
15	**	LAG SCREW, 1/2" X 2 1/2"
14	**	CROSSDRAIN SUPPORT ANGLE
13	4	INTERMEDIATE GRADE/SUPPORT STRIPS, ** SIDE PAN, LOW, (FRP)
12	4	INTERMEDIATE GRADE/SUPPORT STRIPS, ** SIDE PAN, HIGH, (FRP)
11	2	INTERMEDIATE GRADE/SUPPORT STRIPS, CENTER PAN, LOW, (FRP)
10	2	INTERMEDIATE GRADE/SUPPORT STRIPS, CENTER PAN, HIGH, (FRP)
9	4	CENTER SUPPORT, ** SIDE PAN, (FRP)
8	2	CENTER SUPPORT, CENTER PAN, (FRP)
7	1	SIDE PAN, MALE, ** X 20'-0 1/2", RH, (FRP)
6	1	SIDE PAN, MALE, ** X 20'-0 1/2", LH, (FRP)
5	1	CENTER PAN, MALE, STD X 20'-0 1/2", (FRP)
4	1	SIDE PAN, FEMALE, ** X 19'-11 1/2", RH, (FRP)
3	1	SIDE PAN, FEMALE, ** X 19'-11 1/2", LH, (FRP)
2	1	CENTER PAN, FEMALE, STD X 19'-11 1/2", (FRP)
1	2	CROSSDRAIN, **, (FRP)

PROPERTY OF SYNTECHNICS

THIS PRINT OR DRAWING IS THE PROPERTY OF SYNTECHNICS, AND IS CONFIDENTIAL OR PROPRIETARY INFORMATION. IT IS NOT TO BE COPIED, REPRODUCED, USED OR DISCLOSED, IN WHOLE OR IN PART, UNLESS IN REFERENCE TO CONTRACTS OR PROPOSALS OF THIS COMPANY. NOTHING DISCLOSED HEREIN WHICH IS NOT PUBLICLY AVAILABLE MAY BE USED WITHOUT WRITTEN PERMISSION.

REV	DATE	BY	APP'D	DESCRIPTION

SYNTECHNICS
700 TERRACE LANE
PADUCAH, KY.
42003
(502)898-7303
A TRINITY INDUSTRIES, INC. COMPANY

TITLE: SALES DRAWING
TYPE IV AND V
FRP TRACK COLLECTOR PAN SYSTEM
WITH END DAMS
GENERAL ARRANGEMENT & DETAIL

DRAWN	APP'D	SCALE	DATE REVISED	JOB NO	SHEET SHEET REV
	DB	NONE	4-26-96	A215-000-38	1 of 2

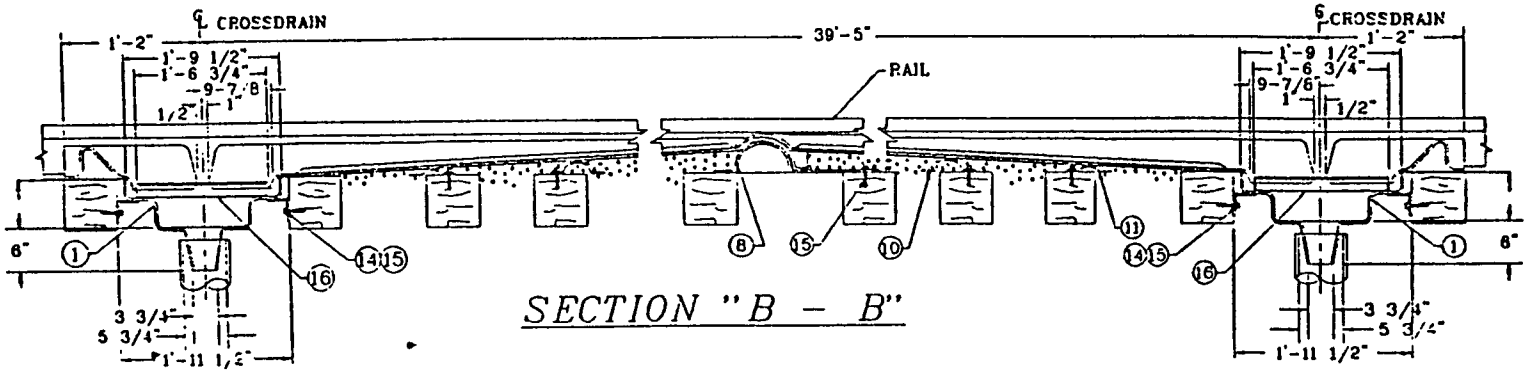

SECTION "B – B"

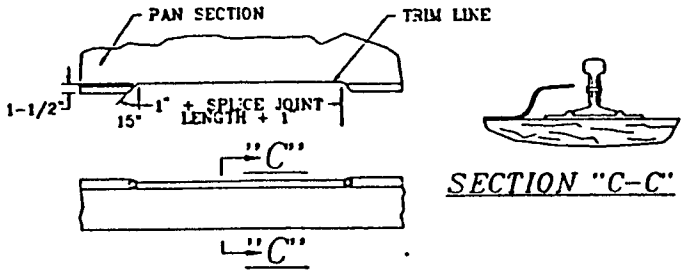

SECTION "C-C"

TRACK SPLICE JOINT TRIM DETAIL

(FIELD USE ONLY IF REQUIRED)

PROPERTY OF SYNTECHNICS

THIS PROFT OR DRAWING IS THE PROPERTY OF SYNTECHNICS, AND IS CONFIDENTIAL OR PROPRIETARY INFORMATION. IT IS NOT TO BE COPIED, REPRODUCED, USED OR DISCLOSED, IN WHOLE OR IN PART UNLESS IN REFERENCE TO CONTRACTS OR PROPOSALS OF THIS COMPANY. NOTHING DISCLOSED HEREIN WHICH IS NOT PUBLICLY AVAILABLE MAY BE USED WITHOUT WRITTEN PERMISSION.

REV	DATE	BY	APPD	DESCRIPTION

SYNTECHNICS
A TRINITY INDUSTRIES, INC. COMPANY
700 TERRACE LANE
PADUCAH, KY.
42003
(502)898-7303

TITLE
SALES DRAWING
TYPE IV AND V
FRP TRACK COLLECTOR PAN SYSTEM
WITH END DAMS
GENERAL ARRANGEMENT & DETAIL

DRAWN	APPD	SCALE	DATE	DWG NO	SHEET
	JDB	NONE	4-26-96	A215-000-38	2 of 2

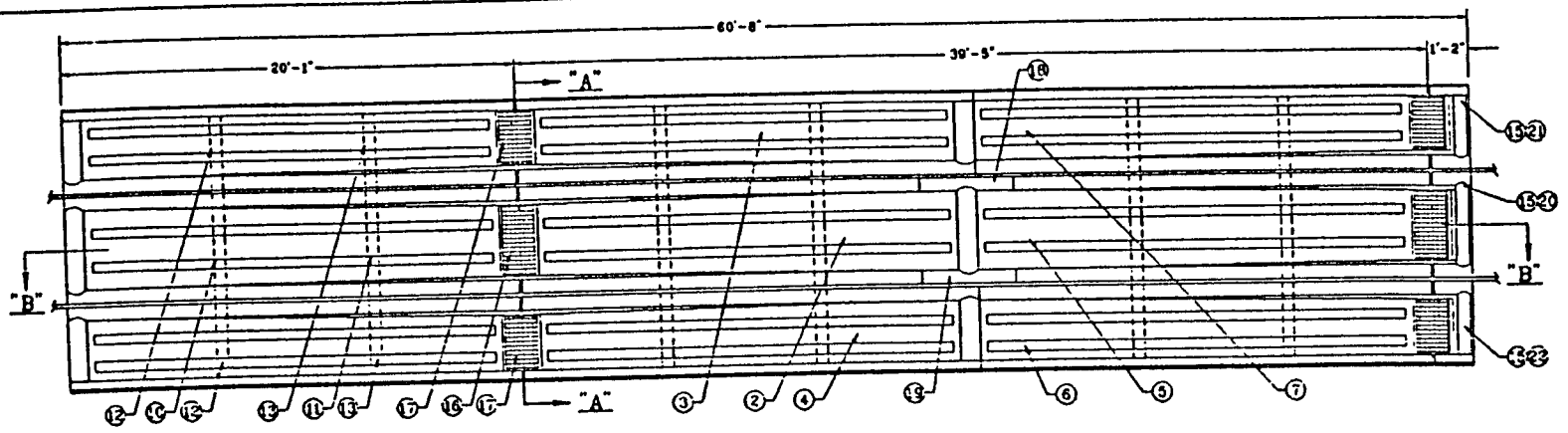

PLAN VIEW

NOTE:

1. CROSSDRAINS MAY BE ROTATED 180° TO ACCOMODATE REQUIREMENTS.
2. DIMENSIONS SHOWN ABOVE FOR CENTERLINE OF CROSSDRAIN TO CENTERLINE OF CROSSDRAIN ARE LOCATED AT CENTERLINE OF TRACK.
3. SEE INSTALLATION MANUAL FOR INSTALLATION INSTRUCTIONS.

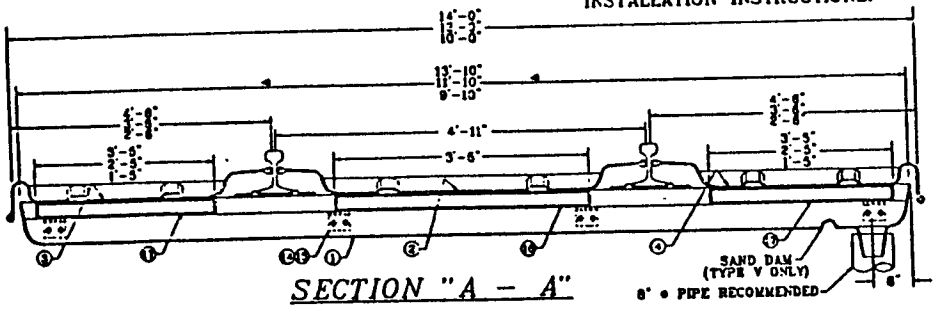

SECTION "A – A"

NOTE:

8 CROSSDRAIN SUPPORT ANGLES AND 16 LAG SCREWS REQUIRED FOR 9'-10" CROSSDRAIN.

12 CROSSDRAIN SUPPORT ANGLES AND 24 LAG SCREWS REQUIRED FOR 11'-10" AND 13'-10" CROSSDRAIN.

** VARIES ACCORDING TO SYSTEM LAYOUT.

ITEM	QTY	DESCRIPTION
22	1	SIDE END DAM, ** X 1'-2", LH (FRP)
21	1	SIDE END DAM, ** X 1'-2", RH (FRP)
20	1	CENTER END DAM, STD X 1'-2", (FRP)
19	1	JOINT FLASHING, CENTER PAN, LH (FRP)
18	1	JOINT FLASHING, CENTER PAN, RH (FRP)
17	6	GRATING, CROSSDRAIN, ** X 1'-6 3/4", (FRP OR GALV STEEL)
16	4	GRATING, CROSSDRAIN, 3'-5" X 1'-6 3/4", (FRP OR GALV STEEL)
15	**	LAG SCREW, 1/2" X 2 1/2"
14	**	CROSSDRAIN SUPPORT ANGLE
13	6	INTERMEDIATE GRADE/SUPPORT STRIPS, ** SIDE PAN, LOW, (FRP)
12	6	INTERMEDIATE GRADE/SUPPORT STRIPS, ** SIDE PAN, HIGH, (FRP)
11	3	INTERMEDIATE GRADE/SUPPORT STRIPS, CENTER PAN, LOW, (FRP)
10	3	INTERMEDIATE GRADE/SUPPORT STRIPS, CENTER PAN, HIGH, (FRP)
9	4	CENTER SUPPORT, ** SIDE PAN, (FRP)
8	2	CENTER SUPPORT, CENTER PAN, (FRP)
7	2	SIDE PAN, MALE, ** X 20'-0 1/2", RH, (FRP)
6	2	SIDE PAN, MALE, ** X 20'-0 1/2", LH, (FRP)
5	2	CENTER PAN, MALE, STD X 20'-0 1/2", (FRP)
4	1	SIDE PAN, FEMALE, ** X 19'-11 1/2", RH, (FRP)
3	1	SIDE PAN, FEMALE, ** X 19'-11 1/2", LH, (FRP)
2	1	CENTER PAN, FEMALE, STD X 19'-11 1/2", (FRP)
1	2	CROSSDRAIN, **, (FRP)

PROPERTY OF SYNTECHNICS

THIS PRINT OR DRAWING IS THE PROPERTY OF SYNTECHNICS, AND IS CONFIDENTIAL OR PROPRIETARY INFORMATION. IT IS NOT TO BE COPIED, REPRODUCED, USED OR DISCLOSED, IN WHOLE OR IN PART, UNLESS IN REFERENCE TO CONTRACTS OR PROPOSALS OF THIS COMPANY. NOTHING DISCLOSED HEREON WHICH IS NOT PUBLICLY AVAILABLE MAY BE USED WITHOUT WRITTEN PERMISSION.

REV	DATE	BY	APPD	DESCRIPTION

SYNTECHNICS
A TRINITY INDUSTRIES, INC. COMPANY
700 TERRACE LANE
PADUCAH, KY.
42003
(502)898-7303

TITLE: SALES DRAWING TYPE IV AND V

FRP TRACK COLLECTOR PAN SYSTEM W/END DAMS

GENERAL ARRANGEMENT & DETAIL

DRAWN	APPD	SCALE	DATE REVISED	DR NO	SHEET SHEET SHEET
Chw	DS	NONE	4-26-96	A215-000-39	1 of 2

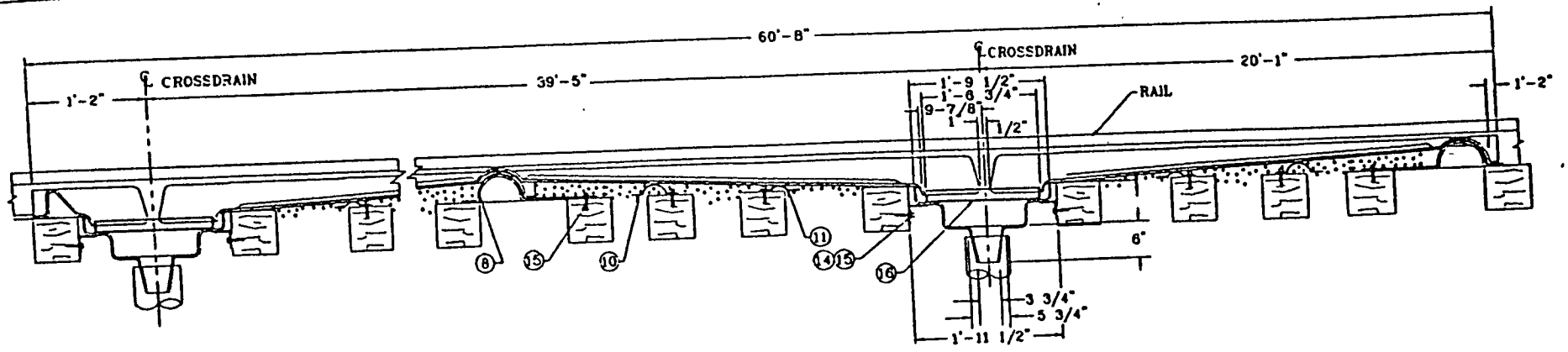

SECTION "B – B"

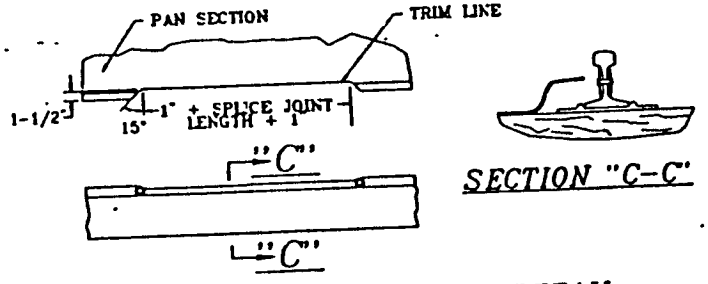

TRACK SPLICE JOINT TRIM DETAIL

(FIELD USE ONLY IF REQUIRED)

PROPERTY OF SYNTECHNICS

THIS PRINT OR DRAWING IS THE PROPERTY OF SYNTECHNICS AND IS CONFIDENTIAL OR PROPRIETARY INFORMATION. IT IS NOT TO BE COPIED, REPRODUCED, USED OR DISCLOSED, IN WHOLE OR IN PART, UNLESS IN REFERENCE TO CONTRACTS OR PROPOSALS OF THIS COMPANY. INFORMATION DISCLOSED HEREON WHICH IS NOT PUBLICLY AVAILABLE MAY BE USED WITHOUT WRITTEN PERMISSION.

REV	DATE	BY	APP'D	DESCRIPTION

SYNTECHNICS
A TRINITY INDUSTRIES, INC. COMPANY
700 TERRACE LANE
PADUCAH, KY.
42003
(502)898-7303

DRAWN: CPW | APP'D: DJB | SCALE: NONE | DATE ISSUED: 4-26-96 | DWG NO: A215-000-39 | SHEET NUMBER: 2 of 2

SALES DRAWING
TYPE IV AND V
FRP TRACK COLLECTOR PAN SYSTEM W/END DAMS
GENERAL ARRANGEMENT & DETAIL

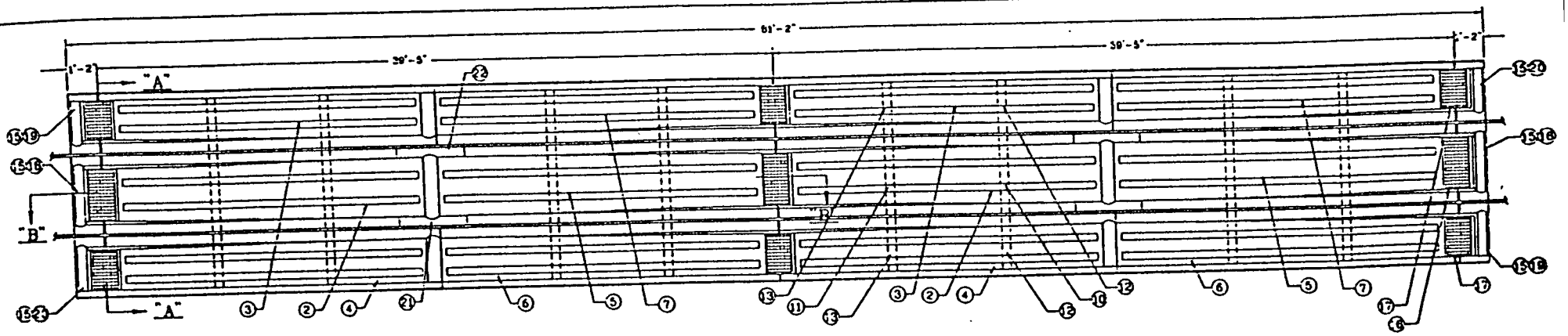

PLAN VIEW

NOTE:

1. CROSSDRAINS MAY BE ROTATED 180° TO ACCOMODATE REQUIREMENTS.
2. DIMENSIONS SHOWN ABOVE FOR CENTERLINE OF CROSSDRAIN TO CENTERLINE OF CROSSDRAIN ARE LOCATED AT CENTERLINE OF TRACK.
3. SEE INSTALLATION MANUAL FOR INSTALLATION INSTRUCTIONS.

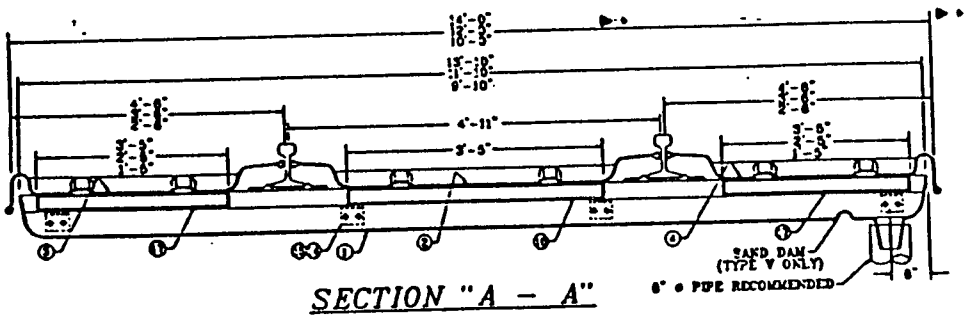

SECTION "A – A"

NOTE:

8 CROSSDRAIN SUPPORT ANGLES AND 16 LAG SCREWS REQUIRED FOR 9'-10" CROSSDRAIN.

12 CROSSDRAIN SUPPORT ANGLES AND 24 LAG SCREWS REQUIRED FOR 11'-10" AND 13'-10" CROSSDRAIN.

** VARIES ACCORDING TO SYSTEM LAYOUT.

ITEM	QTY.	DESCRIPTION
22	2	JOINT FLASHING, CENTER PAN, LH, (FRP)
21	2	JOINT FLASHING, CENTER PAN, RH, (FRP)
20	2	SIDE END DAM, ** X 1'-2", LH (FRP)
19	2	SIDE END DAM, ** X 1'-2", RH (FRP)
18	2	CENTER END DAM, STD. X 1'-2", (FRP)
17	6	GRATING, CROSSDRAIN, ** X 1'-6 3/4", (FRP OR GALV STEEL)
16	3	GRATING, CROSSDRAIN, 3'-6" X 1'-6 3/4", (FRP OR GALV STEEL)
15	**	LAG SCREW, 1/2" X 2 1/2"
14	**	CROSSDRAIN SUPPORT ANGLE
13	6	INTERMEDIATE GRADE/SUPPORT STRIPS, ** SIDE PAN, LOW, (FRP)
12	6	INTERMEDIATE GRADE/SUPPORT STRIPS, ** SIDE PAN, HIGH, (FRP)
11	3	INTERMEDIATE GRADE/SUPPORT STRIPS, CENTER PAN, LOW, (FRP)
10	3	INTERMEDIATE GRADE/SUPPORT STRIPS, CENTER PAN, HIGH, (FRP)
9	6	CENTER SUPPORT, ** SIDE PAN, (FRP)
8	3	CENTER SUPPORT, CENTER PAN, (FRP)
7	2	SIDE PAN, MALE, ** X 20'-0 1/2", RH, (FRP)
6	2	SIDE PAN, MALE, ** X 20'-0 1/2", LH, (FRP)
5	2	CENTER PAN, MALE, STD X 20'-0 1/2", (FRP)
4	2	SIDE PAN, FEMALE, ** X 19'-11 1/2", RH, (FRP)
3	2	SIDE PAN, FEMALE, ** X 19'-11 1/2", LH, (FRP)
2	2	CENTER PAN, FEMALE, STD. X 19'-11 1/2", (FRP)
1	3	CROSSDRAIN, **, (FRP)

PROPERTY OF SYNTECHNICS

THIS PRINT OR DRAWING IS THE PROPERTY OF SYNTECHNICS, AND IS CONFIDENTIAL OR PROPRIETARY INFORMATION. IT IS NOT TO BE COPIED, REPRODUCED USED OR DISCLOSED IN WHOLE OR IN PART, UNLESS IN REFERENCE TO CONTRACTS OR PROPOSALS OF THIS COMPANY. NOTHING DISCLOSED HEREIN WHICH IS NOT PUBLICLY AVAILABLE MAY BE USED WITHOUT WRITTEN PERMISSION.

DRN	DATE	BY	APP'D	Description

SYNTECHNICS
A TRINITY INDUSTRIES, INC. COMPANY
700 TERRACE LANE
PADUCAH, KY.
42003
(502)898-7363

SALES DRAWING
TYPE IV AND V
FRP TRACK COLLECTOR PAN SYST
WITH END DAMS
GENERAL ARRANGEMENT & DETAIL

DRAWN	APP'D	SCALE	DATE REVISED	DWG NO	SHEET NO
	DJS	NONE	4-26-96	A215-000-40	1 of 2

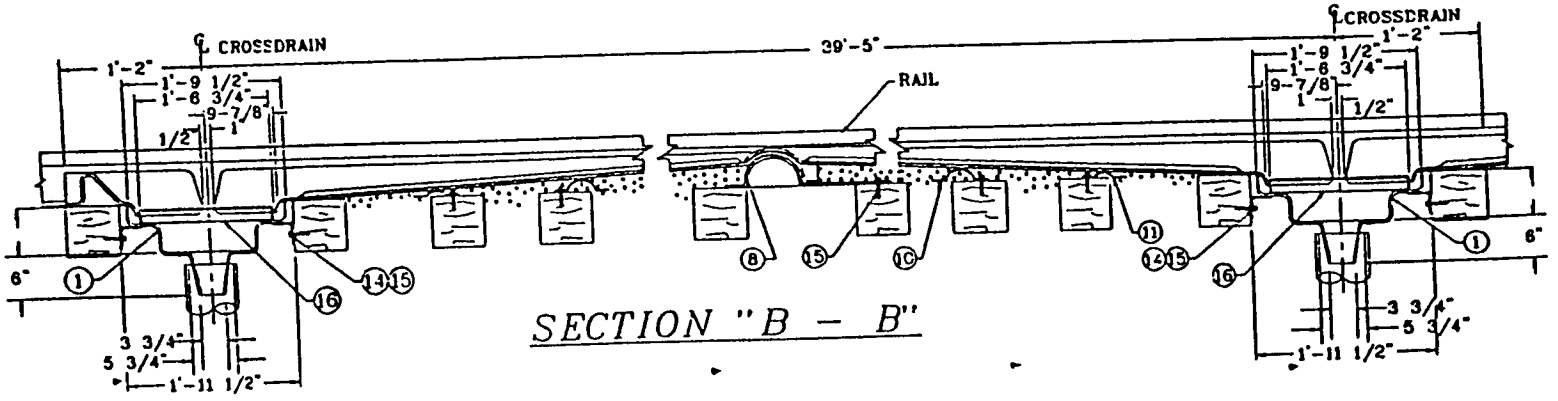

SECTION "B – B"

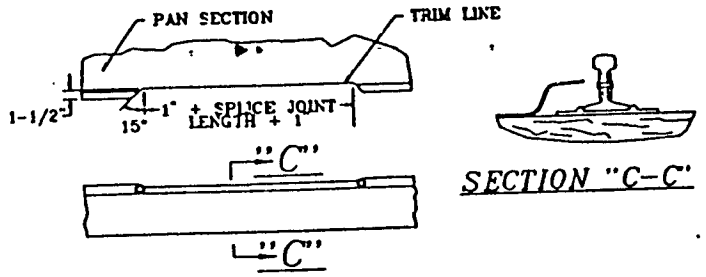

SECTION "C-C"

TRACK SPLICE JOINT TRIM DETAIL

(FIELD USE ONLY IF REQUIRED)

PROPERTY OF SYNTECHNICS

THIS PRINT OR DRAWING IS THE PROPERTY OF SYNTECHNICS, AND IS CONFIDENTIAL OR PROPRIETARY INFORMATION. IT IS NOT TO BE COPIED, REPRODUCED, USED OR DISCLOSED, IN WHOLE OR IN PART, UNLESS IN REFERENCE TO CONTRACTS OR PROPOSALS OF THIS COMPANY. NOTHING DISCLOSED HEREIN WHICH IS NOT PUBLICLY AVAILABLE MAY BE USED WITHOUT WRITTEN PERMISSION.

REV	DATE	BY	APP'D	DESCRIPTION

SYNTECHNICS
A TRINITY INDUSTRIES, INC. COMPANY
700 TERRACE LANE
PADUCAH, KY.
42003
(502)898-7303

TITLE: SALES DRAWING
TYPE IV AND V
FRP TRACK COLLECTOR PAN SYSTEM
WITH END DAMS
GENERAL ARRANGEMENT & DETAIL

DRAWN	APP'D	SCALE	DATE DRAWN	DWG NO	SHEET NUMBER
	DJS	NONE	4-26-96	A215-000-40	2 of 2

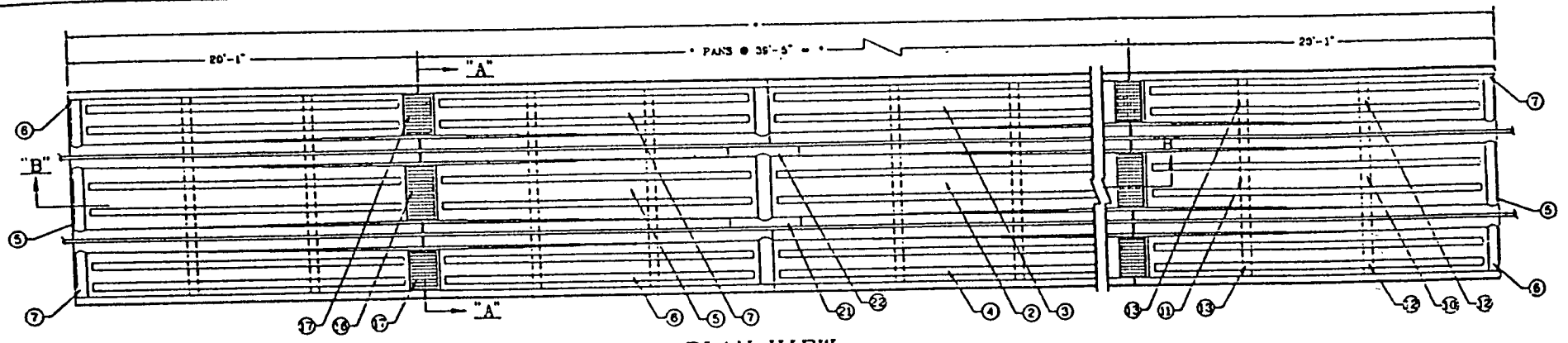

PLAN VIEW

• NUMBER OF PANS WILL DETERMINE LENGTH OF SYSTEM

NOTE:

1. CROSSDRAINS MAY BE ROTATED 150° TO ACCOMODATE REQUIREMENTS.
2. DIMENSIONS SHOWN ABOVE FOR CENTERLINE OF CROSSDRAIN TO CENTERLINE OF CROSSDRAIN ARE LOCATED AT CENTERLINE OF TRACK.
3. SEE INSTALLATION MANUAL FOR INSTALLATION INSTRUCTIONS.

•• VARIES ACCORDING TO SYSTEM LAYOUT.

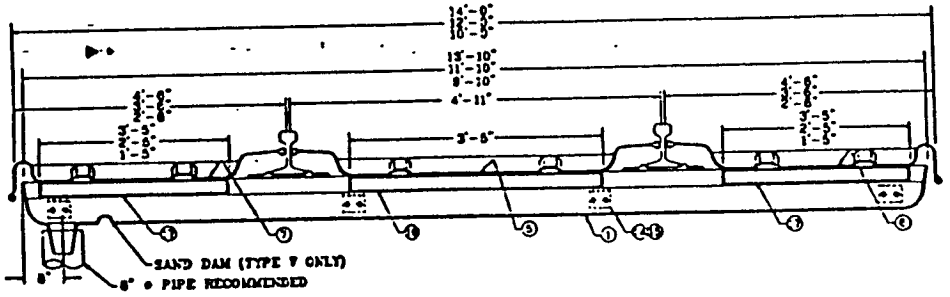

SECTION "A – A"

NOTE:

8 CROSSDRAIN SUPPORT ANGLES AND 16 LAG SCREWS REQUIRED FOR 9'-10" CROSSDRAIN.

12 CROSSDRAIN SUPPORT ANGLES AND 24 LAG SCREWS REQUIRED FOR 11'-10" AND 13'-10" CROSSDRAIN.

ITEM	QTY	DESCRIPTION
22	••	JOINT FLASHING, CENTER PAN, LH, (FRP)
21	••	JOINT FLASHING, CENTER PAN, RH, (FRP)
20	••	SIDE END DAM, ** X 1'-2", LH (FRP)
19	••	SIDE END DAM, ** X 1'-2", RH (FRP)
18	••	CENTER END DAM, STD. X 1'-2", (FRP)
17	••	GRATING, CROSSDRAIN, ** X 1'-0 3/4", (FRP OR GALV STEEL)
16	••	GRATING, CROSSDRAIN, 3'-6" X 1'-0 3/4", (FRP OR GALV STEEL)
15	••	LAG SCREW, 1/2" X 2 1/2"
14	••	CROSSDRAIN SUPPORT ANGLE
13	••	INTERMEDIATE GRADE/SUPPORT STRIPS, ** SIDE PAN, LOW, (FRP)
12	••	INTERMEDIATE GRADE/SUPPORT STRIPS, ** SIDE PAN, HIGH, (FRP)
11	••	INTERMEDIATE GRADE/SUPPORT STRIPS, CENTER PAN, LOW, (FRP)
10	••	INTERMEDIATE GRADE/SUPPORT STRIPS, CENTER PAN, HIGH, (FRP)
9	••	CENTER SUPPORT, ** SIDE PAN, (FRP)
8	••	CENTER SUPPORT, CENTER PAN, (FRP)
7	••	SIDE PAN, MALE, ** X 20'-0 1/2", RH, (FRP)
6	••	SIDE PAN, MALE, ** X 20'-0 1/2", LH, (FRP)
5	••	CENTER PAN, MALE, STD. X 20'-0 1/2", (FRP)
4	••	SIDE PAN, FEMALE, ** X 19'-11 1/2", RH, (FRP)
3	••	SIDE PAN, FEMALE, ** X 19'-11 1/2", LH, (FRP)
2	••	CENTER PAN, FEMALE, STD X 19'-11 1/2", (FRP)
1	••	CROSSDRAIN, **, (FRP)

PROPERTY OF SYNTECHNICS

THIS PRINT OR DRAWING IS THE PROPERTY OF SYNTECHNICS AND IS CONFIDENTIAL OR PROPRIETARY INFORMATION. IT IS NOT TO BE COPIED, REPRODUCED, USED OR DISCLOSED, IN WHOLE OR IN PART, UNLESS IN REFERENCE TO CONTRACTS OR PROPOSALS OF THIS COMPANY. NOTHING DISCLOSED HEREIN WHICH IS NOT PUBLICLY AVAILABLE MAY BE USED WITHOUT WRITTEN PERMISSION.

REV	DATE	BY	APPD	DESCRIPTION

SYNTECHNICS
A TRINITY INDUSTRIES, INC. COMPANY
700 TERRACE LANE
PADUCAH, KY.
42003
(502)898-7303

SALES DRAWING
TYPE IV AND V
FRP TRACK COLLECTOR PAN SYSTEM
GENERAL ARRANGEMENT & DETAIL

DRAWN	APPD	SCALE	DATE REV.	DR NO	SHEET
	DB	NONE	4-26-96	A215-000-41	1 of 2

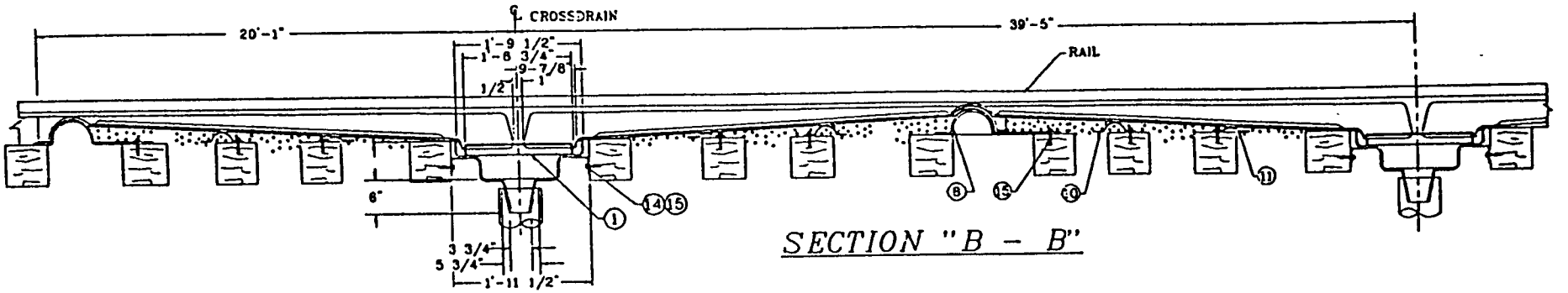

SECTION "B - B"

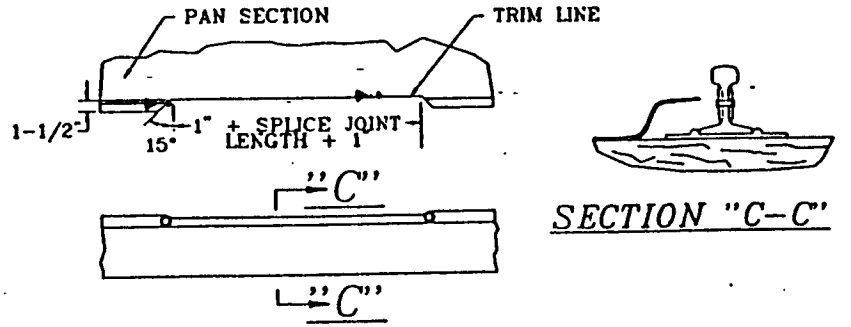

SECTION "C-C"

TRACK SPLICE JOINT TRIM DETAIL

(FIELD USE ONLY IF REQUIRED)

PROPERTY OF SYNTECHNICS

THIS PRINT OR DRAWING IS THE PROPERTY OF SYNTECHNICS, AND IS CONFIDENTIAL OR PROPRIETARY INFORMATION. IT IS NOT TO BE COPIED, REPRODUCED, USED OR DISCLOSED, IN WHOLE OR IN PART, UNLESS IN REFERENCE TO CONTRACTS OR PROPOSALS OF THIS COMPANY. NOTHING DISCLOSED HEREIN WHICH IS NOT PUBLICLY AVAILABLE MAY BE USED WITHOUT WRITTEN PERMISSION.

REV	DATE	BY	APPD	DESCRIPTION

SYNTECHNICS
A TRINITY INDUSTRIES, INC. COMPANY
700 TERRACE LANE
PADUCAH, KY.
42003
(502)898-7303

SALES DRAWING
TYPE IV AND V
FRP TRACK COLLECTOR PAN SYSTEM
GENERAL ARRANGEMENT & DETAIL

DRAWN	APPD	SCALE	DATE	DR NO	SHEET	REV
		NONE	4-26-96	A215-000-41	2 of 2	

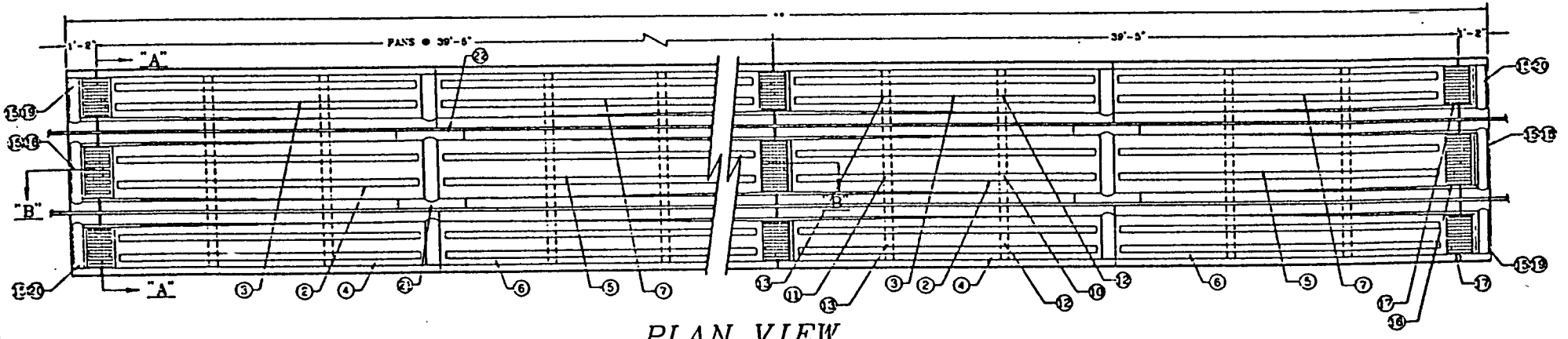

PLAN VIEW

NOTE:

1. CROSSDRAINS MAY BE ROTATED 180° TO ACCOMODATE REQUIREMENTS.
2. DIMENSIONS SHOWN ABOVE FOR CENTERLINE OF CROSSDRAIN TO CENTERLINE OF CROSSDRAIN ARE LOCATED AT CENTERLINE OF TRACK.
3. SEE INSTALLATION MANUAL FOR INSTALLATION INSTRUCTIONS.

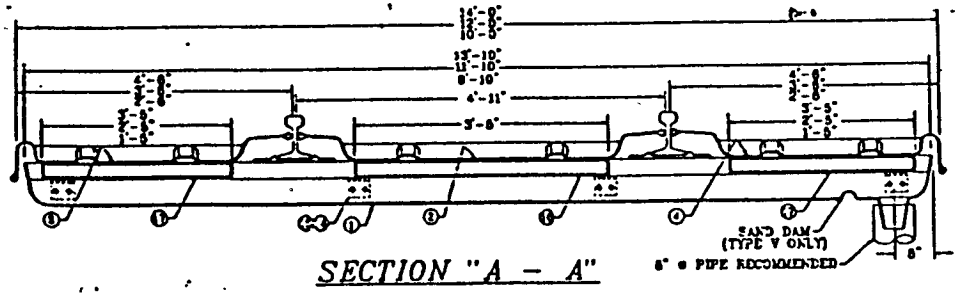

SECTION "A – A"

NOTE:

8 CROSSDRAIN SUPPORT ANGLES AND 16 LAG SCREWS REQUIRED FOR 9'-10" CROSSDRAIN.

12 CROSSDRAIN SUPPORT ANGLES AND 24 LAG SCREWS REQUIRED FOR 11'-10" AND 13'-10" CROSSDRAIN.

•• VARIES ACCORDING TO SYSTEM LAYOUT.

ITEM/PT.		DESCRIPTION
22	••	JOINT FLASHING, CENTER PAN, LH, (FRP)
21	••	JOINT FLASHING, CENTER PAN, RH, (FRP)
20	••	SIDE END DAM, •• X 1'-2", LH (FRP)
19	••	SIDE END DAM, •• X 1'-2", RH (FRP)
18	••	CENTER END DAM, STD X 1'-2", (FRP)
17	••	GRATING, CROSSDRAIN, •• X 1'-6 3/4", (FRP OR GALV STEEL)
16	••	GRATING, CROSSDRAIN, 3'-6" X 1'-6 3/4", (FRP OR GALV STEEL)
15	••	LAG SCREW, 1/2" X 2 1/2"
14	••	CROSSDRAIN SUPPORT ANGLE
13	••	INTERMEDIATE GRADE/SUPPORT STRIPS, •• SIDE PAN, LOW, (FRP)
12	••	INTERMEDIATE GRADE/SUPPORT STRIPS, •• SIDE PAN, HIGH, (FRP)
11	••	INTERMEDIATE GRADE/SUPPORT STRIPS, CENTER PAN, LOW, (FRP)
10	••	INTERMEDIATE GRADE/SUPPORT STRIPS, CENTER PAN, HIGH, (FRP)
9	••	CENTER SUPPORT, •• SIDE PAN, (FRP)
8	••	CENTER SUPPORT, CENTER PAN, (FRP)
7	••	SIDE PAN, MALE, •• X 20'-0 1/2", RH, (FRP)
6	••	SIDE PAN, MALE, •• X 20'-0 1/2", LH, (FRP)
5	••	CENTER PAN, MALE, STD. X 20'-0 1/2", (FRP)
4	••	SIDE PAN, FEMALE, •• X 19'-11 1/2", RH, (FRP)
3	••	SIDE PAN, FEMALE, •• X 19'-11 1/2", LH, (FRP)
2	••	CENTER PAN, FEMALE, STD. X 19'-11 1/2", (FRP)
1	••	CROSSDRAIN, ••, (FRP)

PROPERTY OF SYNTECHNICS

THIS PRINT OR DRAWING IS THE PROPERTY OF SYNTECHNICS AND IS CONFIDENTIAL OR PROPRIETARY INFORMATION. IT IS NOT TO BE COPIED, REPRODUCED, USED OR DISCLOSED IN WHOLE OR IN PART, USED IN REFERENCE TO CONTRACTS OR PROPOSALS OF THIS COMPANY. NOTHING DISCLOSED HEREIN WHICH IS NOT PUBLICLY AVAILABLE MAY BE USED WITHOUT WRITTEN PERMISSION.

REV	DATE	BY	APPD	DESCRIPTION

SYNTECHNICS
A TRINITY INDUSTRIES, INC. COMPANY
700 TERRACE LANE
PADUCAH, KY.
42003
(502)898-7363

SALES DRAWING
TYPE IV AND V
FRP TRACK COLLECTOR PAN SYSTEM
WITH END DAMS
GENERAL ARRANGEMENT & DETAIL

DRAWN	APPD	SCALE	DATE	DWG NO	SHEET
CFW	DB	NONE	4-26-96	A215-000-42	1 of 2

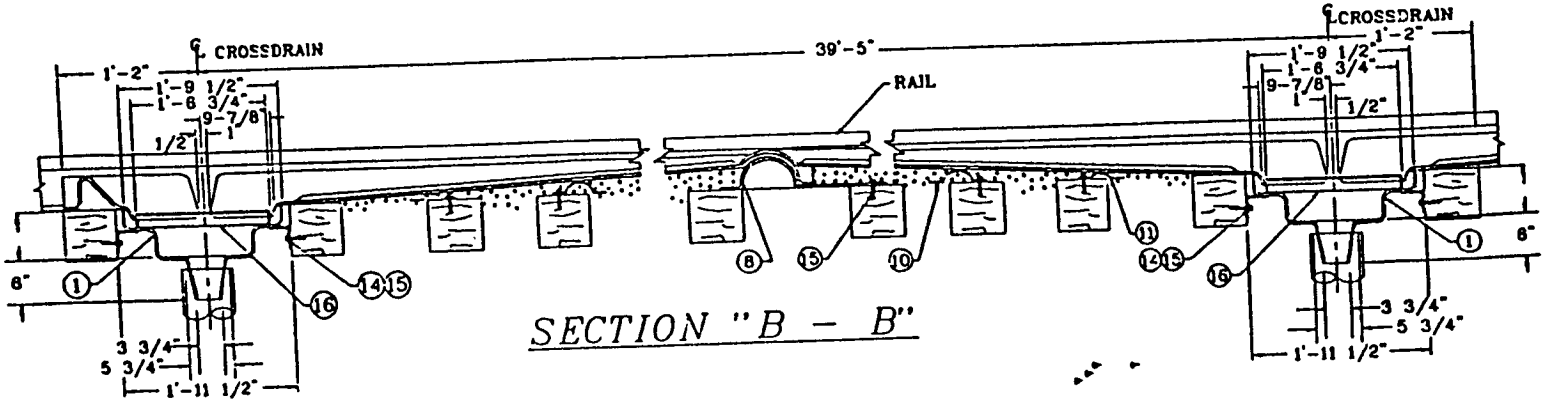

SECTION "B – B"

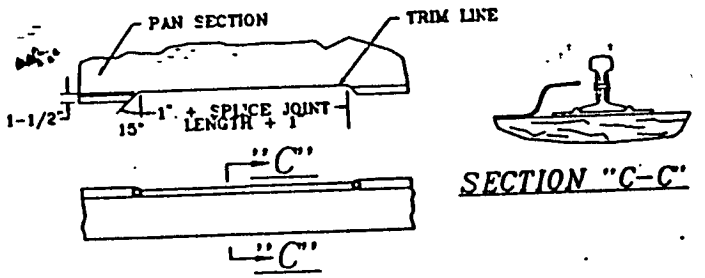

SECTION "C–C"

TRACK SPLICE JOINT TRIM DETAIL

(FIELD USE ONLY IF REQUIRED)

PROPERTY OF SYNTECHNICS

THIS PRINT OR DRAWING IS THE PROPERTY OF SYNTECHNICS, AND IS CONFIDENTIAL OR PROPRIETARY INFORMATION. IT IS NOT TO BE COPIED, REPRODUCED, USED OR DISCLOSED, IN WHOLE OR IN PART, UNLESS IN REFERENCE TO CONTRACTS OR PROPOSALS OF THIS COMPANY. NOTHING ENCLOSED HEREIN WHICH IS NOT PUBLICLY AVAILABLE MAY BE USED WITHOUT WRITTEN PERMISSION.

NO.	DATE	BY	APPD	DESCRIPTION

SYNTECHNICS
A TRINITY INDUSTRIES, INC. COMPANY
700 TERRACE LANE
PADUCAH, KY.
42003
(502)898-7303

TITLE: SALES DRAWING
TYPE IV AND V
FRP TRACK COLLECTOR PAN SYSTEM
WITH END DAMS
GENERAL ARRANGEMENT & DETAIL

DRAWN	CHKD	SCALE	DATE	DWG NO.	SHEET
	DS	NONE	4-26-96	A215-000-42	2 of 2

Product Descriptions

Standard Posi-Drain Characteristics

- A Standard Center Pan is 19'-9" or 39'-6" long and has a factory molded slope directing any spillage to the center of the pan. The system attaches to a crossdrain mounted at the center of the pan. At the intersection of pans in a continuous system there is a male/female transverse adjustable joint.
- The End Center Pans are 20'-11" or 40'-0" long and extend 10'-5½" or 20'-3" respectively beyond the last crossdrain.
- A 3½" wide x 20'-7" or 40'-2" Flashing is provided to allow easy center pan installation and removal, and secure the collector pan system between the rails.
- A Standard Side Pan is 19'-9" or 39'-6" long and is available in standard widths of 2'-6", 3'-6", 4'-6", and 5'-6". The Side Pans have factory molded slope directing any spillage to the center of the pan. The system attaches to a crossdrain mounted at the center of the pan. At the intersection of pans in a continuous system there is a male/female transverse adjustable joint.
- The End Side Pans are 20'-11" or 40'-0" long and extend 10'-5½" or 20'-3" respectively beyond the last crossdrain.
- The standard crossdrain called a "Posi-Pipe" has a 9'-4", 10'-4", 11'-4", or 11'-0" standard width (listed in respect to side pan sizes) and is mounted at the center of the pans to join the center pan and side pans together. The "Posi-Pipe is also used to link the track collector pan system with a pre-installed disposal system.
- "Posi-Pipes" are available with a choice of a standard 4" diameter female NPT threaded connector or a 4" diameter female slip connector.
- A Stainless Steel "snap-in" Drain Cover is provided for each 4" diameter drain port in the collector pans. Below the drain cover is a Neoprene or Viton gasket that seals the collector pan/Posi-Pipe interface when installed.
- The Hardware Package consist of self-drilling screws that are used to install the flashing to the center pans, and secure the transverse joints.
- Stainless Steel 5/16" Bolts, Nuts and Washers are provided to support the "Posi-Pipe" from the pan system at the pan/Posi-Pipe interface.
- Posi-Drain® pans are available in General Purpose, Isophthalic or Vinyl Ester laminates.

Open-Access Posi-Drain® Characteristics

- A Standard Center Pan is 39'-6" long and has a factory molded slope directing any spillage to the center of the pan. The system attaches to a crossdrain mounted at the center of the pan. At the intersection of pans in a continuous system there is a male/female transverse adjustable joint.
- The End Center Pans are 40'-0" long and extend 20'-3" beyond the last crossdrain.
- A 3½" wide x 40'-2" Flashing is provided to allow easy center pan installation and removal, and secure the collector pan system between the rails.
- A Standard Side Pan is 39'-6" long and is only available in a width of 2'-6". The Side Pans have factory molded slope directing any spillage to the center of the pan. *The system attaches to a crossdrain mounted at the center of the pan. At the intersection of pans in a continuous system there is a male/female transverse adjustable joint.
- The End Side Pans are 40'-0" long and extend 20'-3" beyond the last crossdrain.
- The standard Open-Access Crossdrain has a 9'-10" width and is mounted at the center of the pans to join the center pan and side pans together. The Open-Access Crossdrain has a 12" nominal length that allows installation between the ties with a minimum of tie removal or modification. The Open-Access Crossdrain is also used to link the track collector pan system with a pre-installed disposal system.
- Open-Access Crossdrains are available with a choice of standard 4" diameter female NPT threaded connector or a 4" diameter female slip connector.
- Grating Assemblies consists of one center and two side pan pieces of pre-cut FRP grating that cover the 10" wide drain ports in the collector pans. Below the FRP drain cover is a flanged interface that seals the collector pan to the crossdrain. A pliable sealant such as silicone is applied at the interface when installed.
- The Hardware Package consist of self-drilling screws that are used to install the flashing to the center pans, and secure the transverse joints.
- Stainless Steel 5/16" Bolts, Nuts and Washers are provided to support the Open-Access Crossdrain from the pan system at the pan/crossdrain interface.
- Open-Access pans are available in General Purpose, Isophthalic or Vinyl Ester laminates.

Standard & Open-Access Posi-Drain General Arrangement Drawings

Drawing #B218-000-01 - #B218-000-03
Drawing #B219-000-01 - #B219-000-03

Beginning on page 24 you will find copies of Standard Posi-Drain® and Open-Access Posi-Drain® General Arrangement Drawings. These drawings are to assist you in understanding how the pans fit and work together. You will notice a proprietary comment on each drawing. Please respect it! If you would like permission to incorporate one of our drawings into one of your drawings, please call the SynTechnics Sales Office for permission.

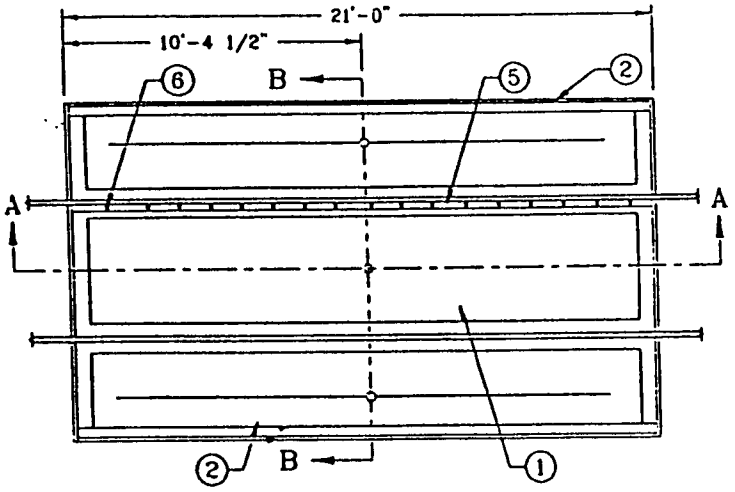

PLAN VIEW

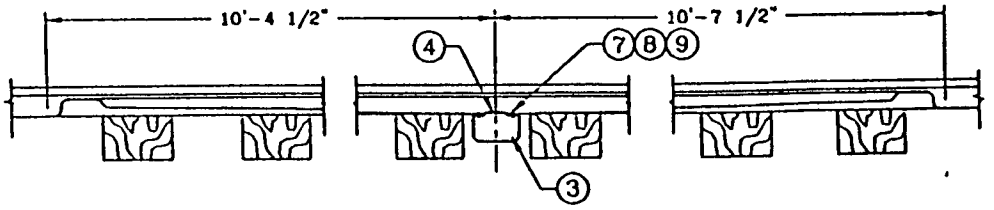

SECTION A – A

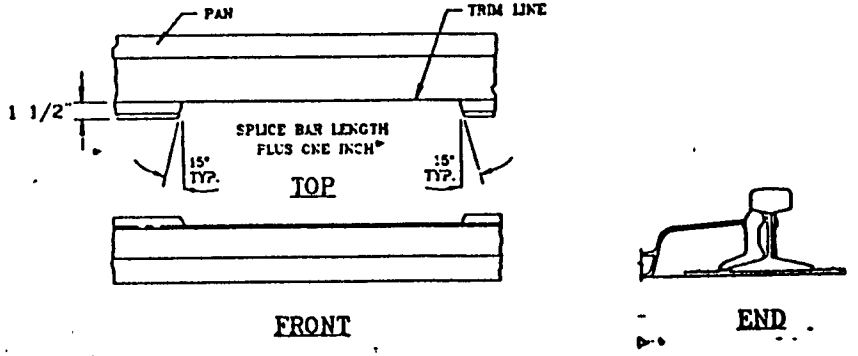

SPLICE JOINT TRIM DETAIL

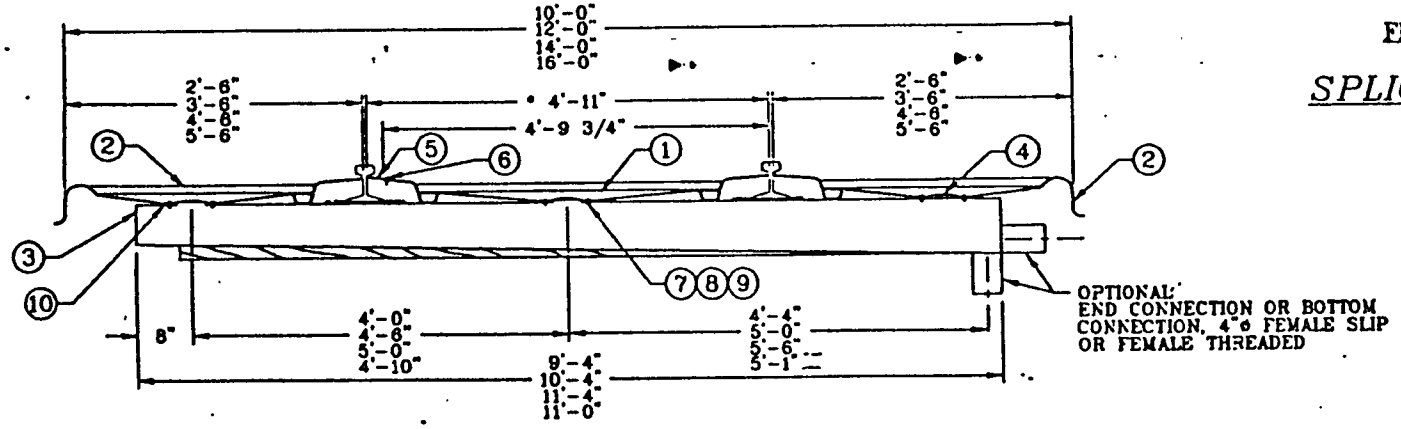

SECTION B – B

* MATCHES WEB TO WEB DIMENSION OF EXISTING TRACK

ITEM	QTY	DESCRIPTION
10	3	GASKET, 7 1/8" X 7 1/8"
9	12	5/16", HEX NUT, (SS)
8	24	5/16", FLAT WASHER, (SS)
7	12	5/16" - 18 X 1 1/4", HEX HEAD BOLT, (SS)
6	18	#10 X 1", HEX HEAD SELF-DRILLING SCREWS, (SS)
5	1	FLASHING, CENTER PAN, 3 1/2" X 20'-7", (FRP)
4	3	4"ø, DRAIN COVER, (SS)
3	1	POSI-PIPE
2	2	SIDE PAN, END/END, X 21'-0", (FRP)
1	1	CENTER PAN, END/END, X 21'-0", (FRP)

PROPERTY OF
SYNTECHNICS, INC.
THIS PRINT OR DRAWING IS THE PROPERTY OF SYNTECHNICS, INC. AND IS CONFIDENTIAL OR PROPRIETARY INFORMATION. IT IS NOT TO BE COPIED, REPRODUCED, USED OR DISCLOSED, IN WHOLE OR IN PART, UNLESS IN REFERENCE TO CONTRACTS OR PROPOSALS OF THIS COMPANY. METHODS DISCLOSED HEREIN WHICH ARE NOT PUBLICLY AVAILABLE MAY BE USED WITHOUT WRITTEN PERMISSION.

SYNTECHNICS INC.
A TRINITY INDUSTRIES, INC. COMPANY
700 TERRACE LANE
PADUCAH, KY.
42003
(502)898-7303

SALES DRAWING
POSI-DRAIN
FRP TRACK COLLECTOR PAN SYSTEM
GENERAL ARRANGEMENT & DETAIL

DRAWN	APPD	SCALE	DATE ISSUED	DWG NO	SHEET	REV
Cfw	DTS	NONE	4-26-96	A218-000-41	1 of 1	

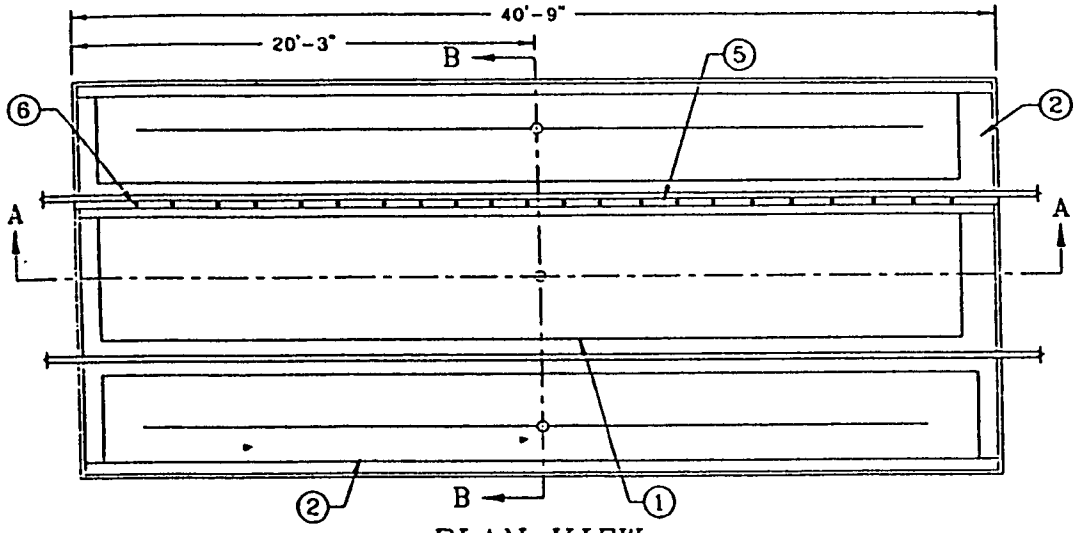

PLAN VIEW

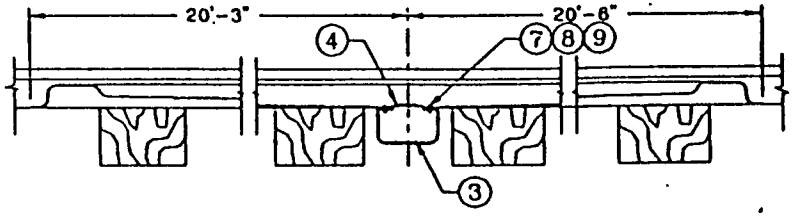

SECTION A – A

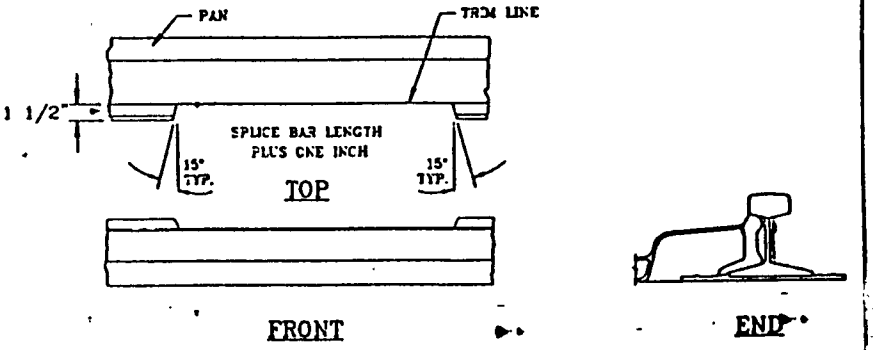

SPLICE JOINT TRIM DETAIL

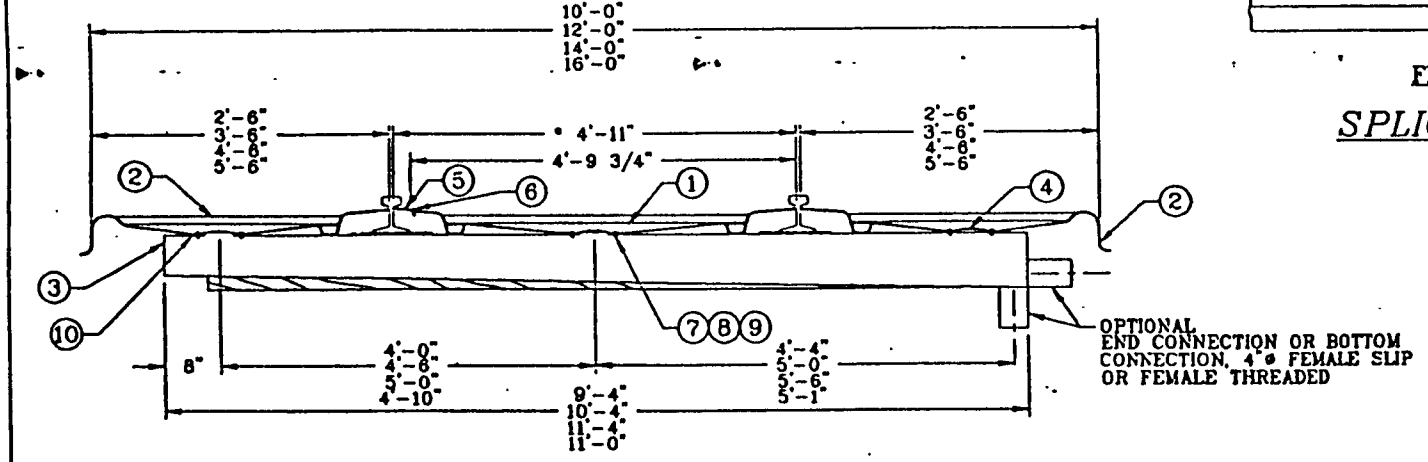

SECTION B – B

• MATCHES WEB TO WEB DIMENSION OF EXISTING TRACK

ITEM	QTY	DESCRIPTION
10	3	GASKET, 7 1/8" X 7 1/8"
9	12	5/16", HEX NUT, (SS)
8	24	5/16", FLAT WASHER, (SS)
7	12	5/16" – 18 X 1 1/4", HEX HEAD BOLT, (SS)
6	32	#10 X 1", HEX HEAD SELF-DRILLING SCREWS, (SS)
5	1	FLASHING, CENTER PAN, 3 1/2" X 40'-2", (FRP)
4	3	4"ø, DRAIN COVER, (SS)
3	1	POSI-PIPE
2	2	SIDE PAN, END/END, X 40'-9", (FRP)
1	1	CENTER PAN, END/END, X 40'-9", (FRP)

PROPERTY OF
SYNTECHNICS, INC.
THIS PRINT OR DRAWING IS THE PROPERTY OF SYNTECHNICS, INC., AND IS CONFIDENTIAL OR PROPRIETARY INFORMATION. IT IS NOT TO BE COPIED, REPRODUCED, USED OR DISCLOSED, IN WHOLE OR IN PART, UNLESS IN REFERENCE TO CONTRACTS OR PROPOSALS OF THIS COMPANY. NOTHING DISCLOSED HEREIN WHICH IS NOT PUBLICLY AVAILABLE MAY BE USED WITHOUT WRITTEN PERMISSION.

SYNTECHNICS INC.
A TRINITY INDUSTRIES, INC. COMPANY
700 TERRACE LANE
PADUCAH, KY.
42003
(502)898-7303

SALES DRAWING
POSI-DRAIN
FRP TRACK COLLECTOR PAN SYSTEM
GENERAL ARRANGEMENT & DETAIL

DRAWN	APPR	SCALE	DATE	DWG NO	SHEET
	CJS	NONE	4-26-96	A218-000-42	1 of 1

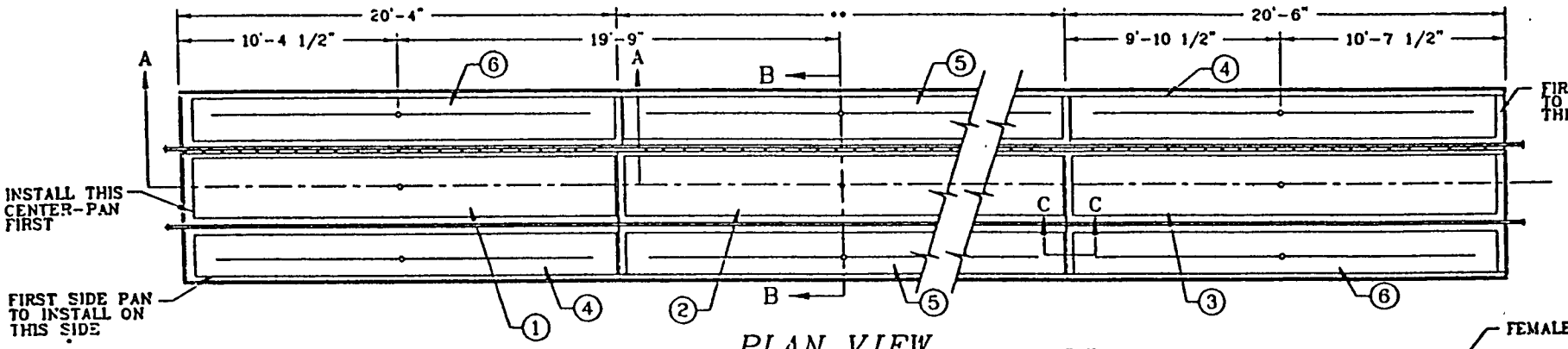

PLAN VIEW

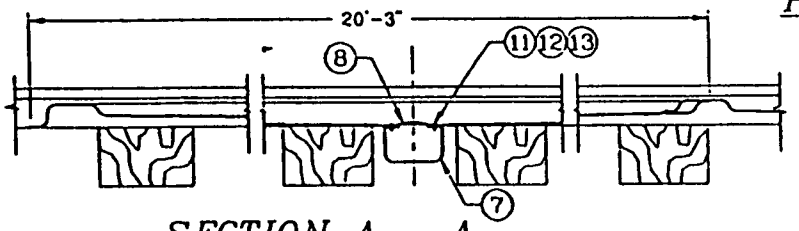

SECTION A – A

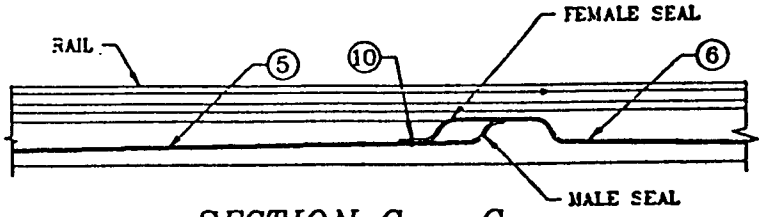

SECTION C – C

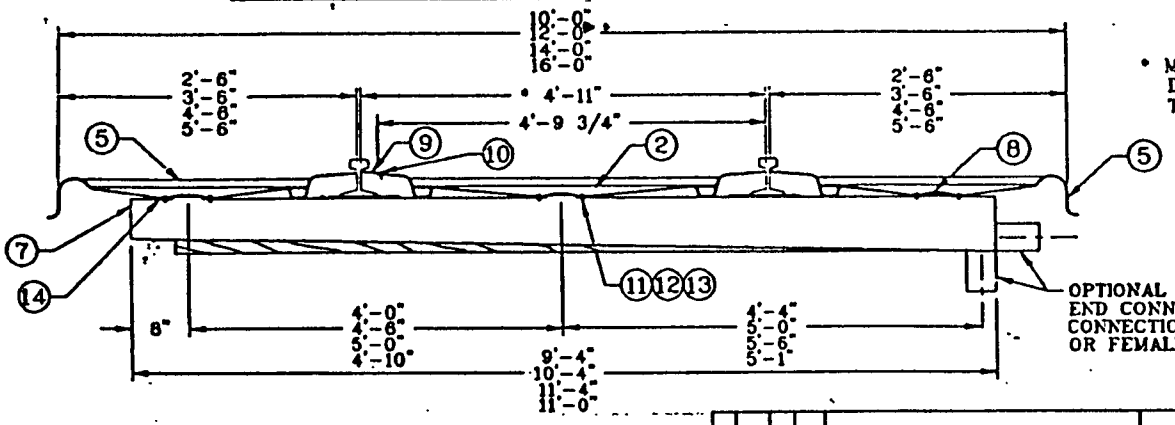

SECTION B – B

• MATCHES WEB TO WEB DIMENSION OF EXISTING TRACK

•• VARIES ACCORDING TO SYSTEM LAYOUT

ITEM	QTY	DESCRIPTION
14	••	GASKET, 7 1/8" X 7 1/8"
13	••	5/16", HEX NUT, (SS)
12	••	5/16", FLAT WASHER, (SS)
11	••	5/16" – 18 X 1 1/4", HEX HEAD BOLT, (SS)
10	••	#10 X 1", HEX HEAD SELF-DRILLING SCREWS, (SS)
9	••	FLASHING, CENTER PAN, 3 1/2" X 20'-7", (FRP)
8	••	4"ø, DRAIN COVER, (SS)
7	••	POSI-PIPE
6	••	SIDE PAN, FEMALE/END, X 21'-0", (FRP)
5	••	SIDE PAN, FEMALE/MALE, X 20'-4", (FRP)
4	••	SIDE PAN, END/MALE, X 20'-4", (FRP)
3	••	CENTER PAN, FEMALE/END, STD., X 21'-0", (FRP)
2	••	CENTER PAN, FEMALE/MALE, STD., X 20'-4", (FRP)
1	••	CENTER PAN, END/MALE, STD., X 20'-4", (FRP)

PROPERTY OF SYNTECHNICS, INC.
THIS PRINT OR DRAWING IS THE PROPERTY OF SYNTECHNICS, INC., AND IS CONFIDENTIAL OR PROPRIETARY INFORMATION. IT IS NOT TO BE COPIED, REPRODUCED, USED OR DISCLOSED, IN WHOLE OR IN PART, UNLESS IN REFERENCE TO CONTRACTS OR PROPOSALS OF THIS COMPANY. NOTHING DISCLOSED HEREIN WHICH IS NOT PUBLICLY AVAILABLE MAY BE USED WITHOUT WRITTEN PERMISSION.

REV	DATE	BY	APP'D	DESCRIPTION

SYNTECHNICS INC.
A TRINITY INDUSTRIES, INC. COMPANY
700 TERRACE LANE
PADUCAH, KY.
42003
(502)898-7303

TITLE
SALES DRAWING
POSI-DRAIN
FRP TRACK COLLECTOR PAN SYSTEM
GENERAL ARRANGEMENT & DETAIL

DRAWN	TYPE	SCALE	DATE	DR. No.	SHEET
Cfw	DIS	NONE	4-26-96	A218-000-43	1 of 1

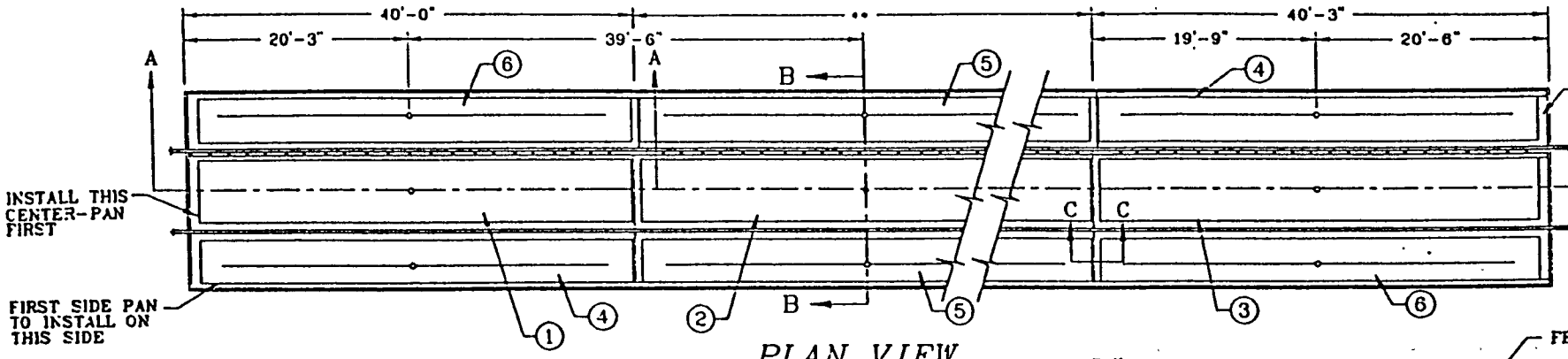

PLAN VIEW

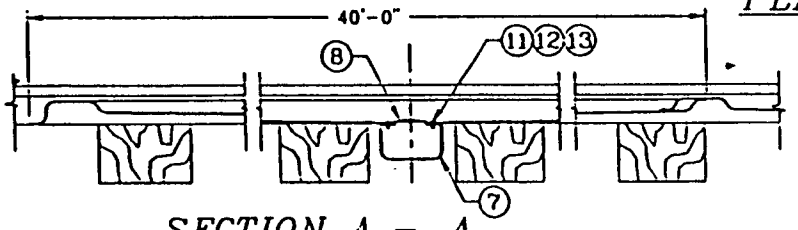

SECTION A – A

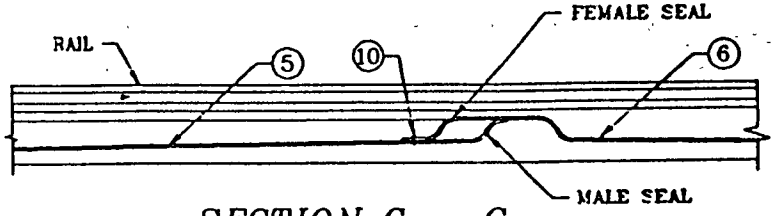

SECTION C – C

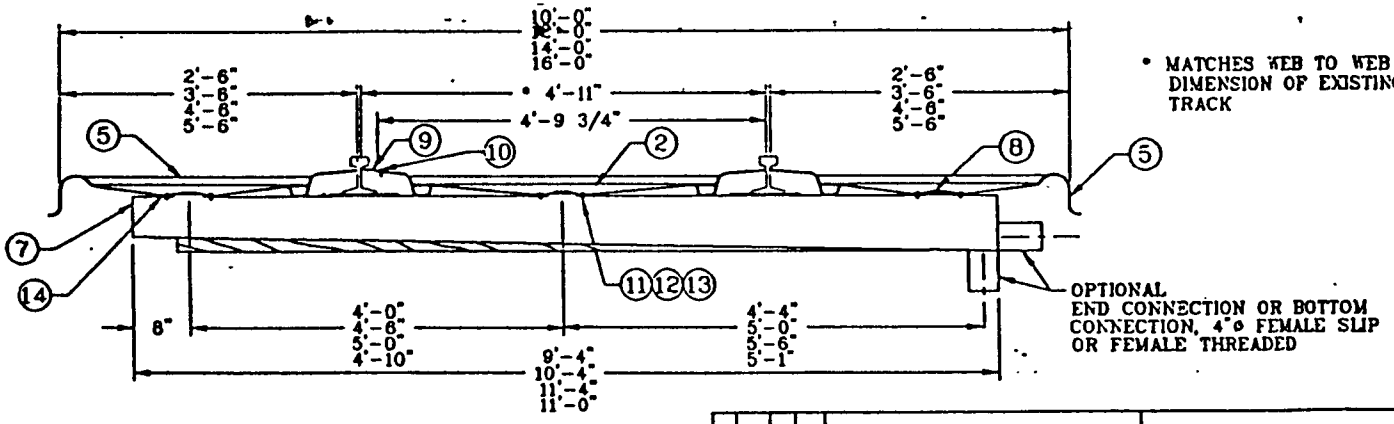

• MATCHES WEB TO WEB DIMENSION OF EXISTING TRACK

SECTION B – B

•• VARIES ACCORDING TO SYSTEM LAYOUT

ITEM	QTY	DESCRIPTION
14	••	GASKET, 7 1/8" X 7 1/8"
13	••	5/16", HEX NUT, (SS)
12	••	5/16", FLAT WASHER, (SS)
11	••	5/16" – 18 X 1 1/4", HEX HEAD BOLT, (SS)
10	••	#10 X 1", HEX HEAD SELF-DRILLING SCREWS, (SS)
9	••	FLASHING, CENTER PAN, 3 1/2" X 40'-2", (FRP)
8	••	4"ø, DRAIN COVER, (SS)
7	••	POSI-PIPE
6	••	SIDE PAN, FEMALE/END, X 40'-9", (FRP)
5	••	SIDE PAN, FEMALE/MALE, X 40'-1", (FRP)
4	••	SIDE PAN, END/MALE, X 40'-1", (FRP)
3	••	CENTER PAN, FEMALE/END, STD., X 40'-9", (FRP)
2	••	CENTER PAN, FEMALE/MALE, STD., X 40'-1", (FRP)
1	••	CENTER PAN, END/MALE, STD., X 40'-1", (FRP)

PROPERTY OF SYNTECHNICS, INC.
THIS PRINT OR DRAWING IS THE PROPERTY OF SYNTECHNICS, INC., AND IS CONFIDENTIAL OR PROPRIETARY INFORMATION. IT IS NOT TO BE COPIED, REPRODUCED, USED OR DISCLOSED, IN WHOLE OR IN PART, UNLESS IN ENTIRENCE TO CONTRACTS OR PROPOSALS OF THIS COMPANY. NOTHING DISCLOSED HEREIN WHICH IS NOT PUBLICLY AVAILABLE MAY BE USED WITHOUT WRITTEN PERMISSION.

SYNTECHNICS INC.
A TRINITY INDUSTRIES, INC. COMPANY
700 TERRACE LANE
PADUCAH, KY.
42003
(502)898-7303

SALES DRAWING
POSI-DRAIN
FRP TRACK COLLECTOR PAN SYSTEM
GENERAL ARRANGEMENT & DETAIL

DRAWN	DATE	SCALE	DATE REVISED	DWG NO	SHEET NO
Chris	DIS	NONE	4-26-96	A218-000-44	1 of 1

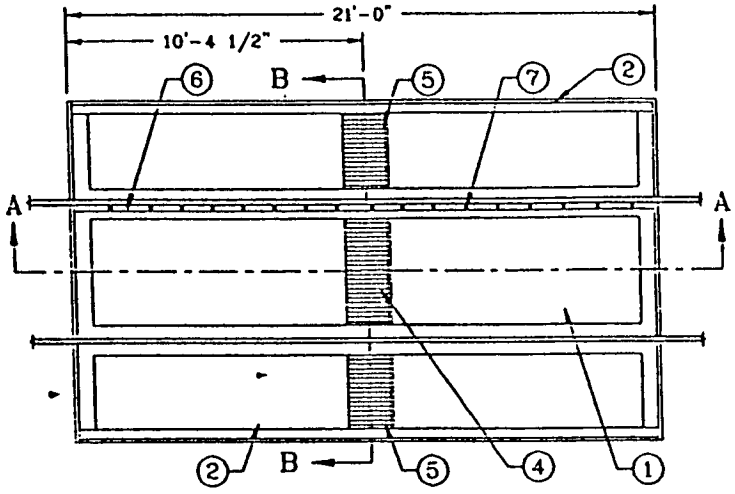

PLAN VIEW

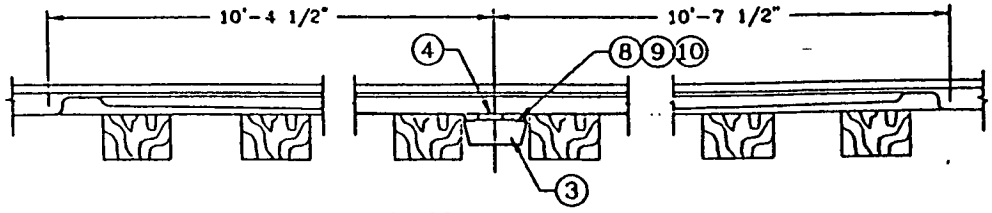

SECTION A – A

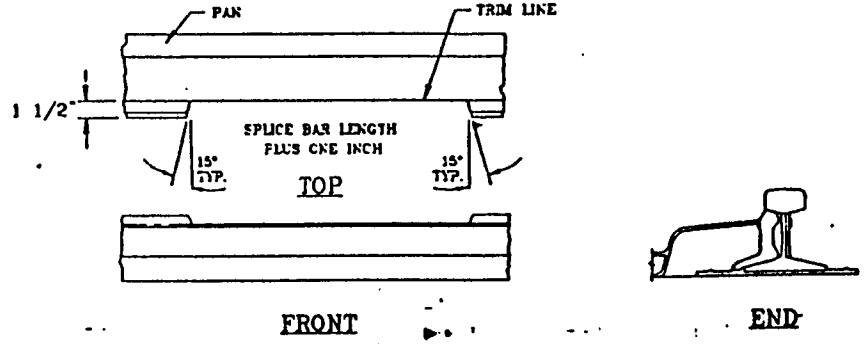

SPLICE JOINT TRIM DETAIL

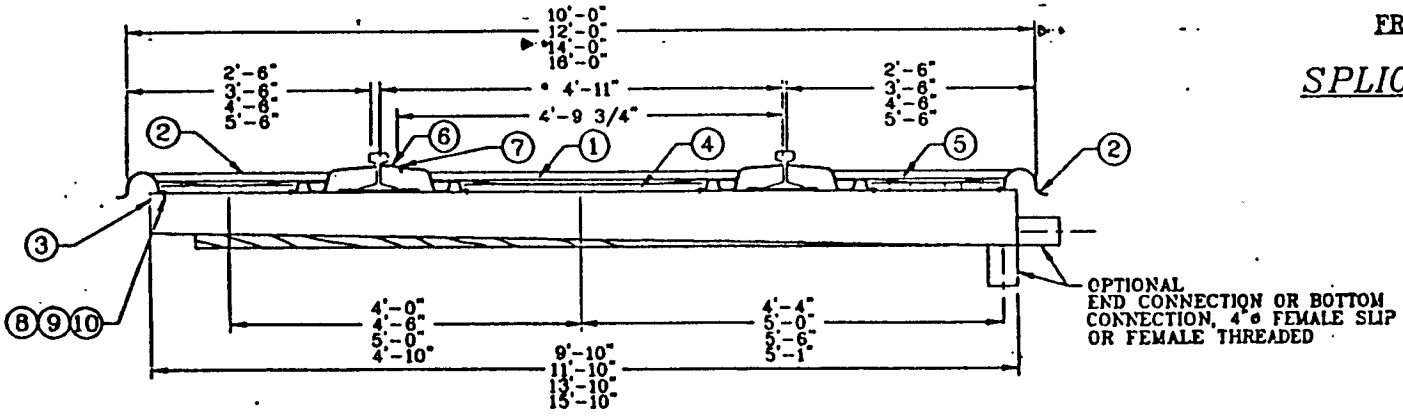

SECTION B – B

• MATCHES WEB TO WEB DIMENSION OF EXISTING TRACK

ITEM	QTY	DESCRIPTION
11	1	10.3 OZ. SILICONE CARTRIDGE
10	12	5/16", HEX NUT, (SS)
9	24	5/16", FLAT WASHER, (SS)
8	12	5/16" – 18 X 1 1/4", HEX HEAD BOLT, (SS)
7	16	#10 X 1", HEX HEAD SELF-DRILLING SCREWS, (SS)
6	1	FLASHING, CENTER PAN, 3 1/2" X 20'-7", (FRP)
5	2	GRATING, 12" X 14" X 1", (FRP)
4	1	GRATING, 12" X 36" X 1", (FRP)
3	1	POSI-PIPE, OPEN ACCESS
2	2	SIDE PAN, END/END, STD., X 21'-0", (FRP)
1	1	CENTER PAN, END/END, STD., X 21'-0", (FRP)

PROPERTY OF:
SYNTECHNICS, INC.
THIS PRINT OR DRAWING IS THE PROPERTY OF SYNTECHNICS, INC., AND IS CONFIDENTIAL OR PROPRIETARY INFORMATION. IT IS NOT TO BE COPIED, REPRODUCED, USED OR DISCLOSED, IN WHOLE OR IN PART, UNLESS IN REFERENCE TO CONTRACTS OR PROPOSALS OF THIS COMPANY. NOTHING DISCLOSED HEREIN WHICH IS NOT PUBLICLY AVAILABLE MAY BE USED WITHOUT WRITTEN PERMISSION.

SYNTECHNICS INC.
A TRINITY INDUSTRIES, INC. COMPANY
700 TERRACE LANE
PADUCAH, KY.
42003
(502)898-7303

SALES DRAWING
OPEN ACCESS
FRP TRACK COLLECTOR PAN SYSTEM
GENERAL ARRANGEMENT & DETAIL

DRAWN	APPD	SCALE	DATE	DWG NO	REV
	DJB	NONE	4-26-96	A219-000-06	1 of 1

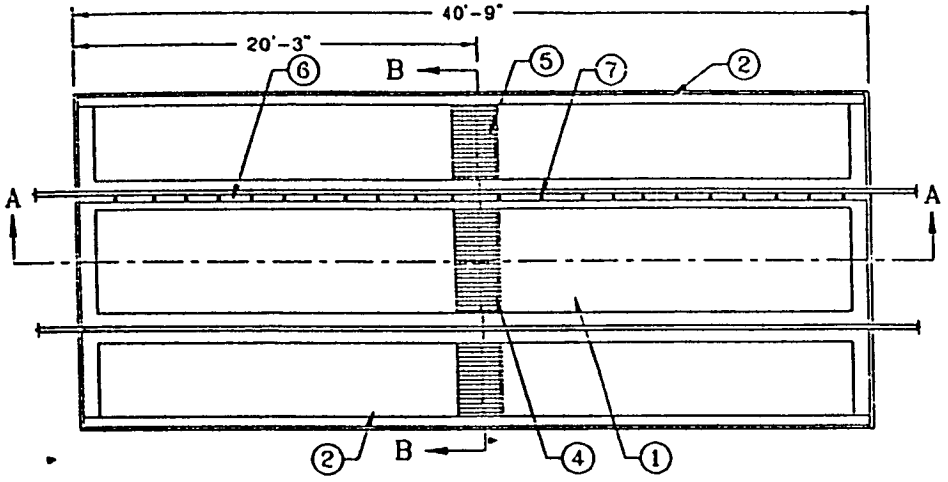

PLAN VIEW

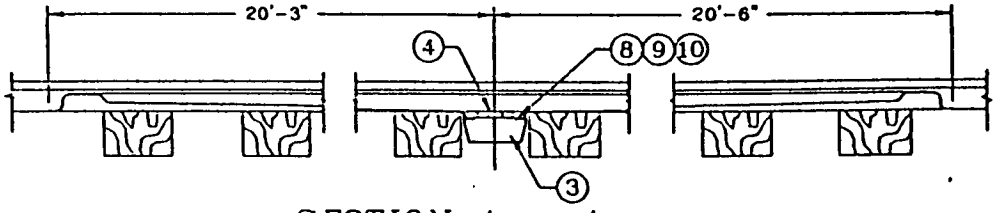

SECTION A – A

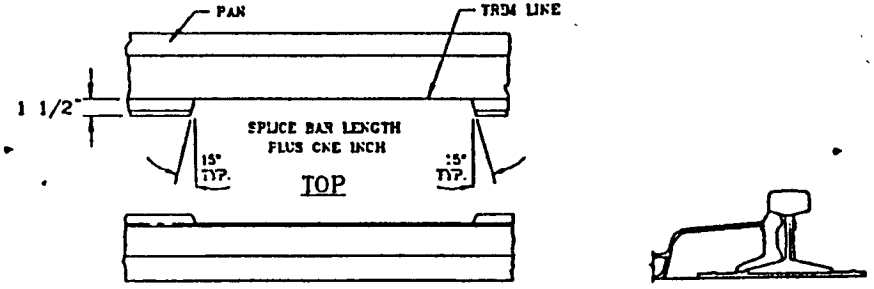

SPLICE JOINT TRIM DETAIL

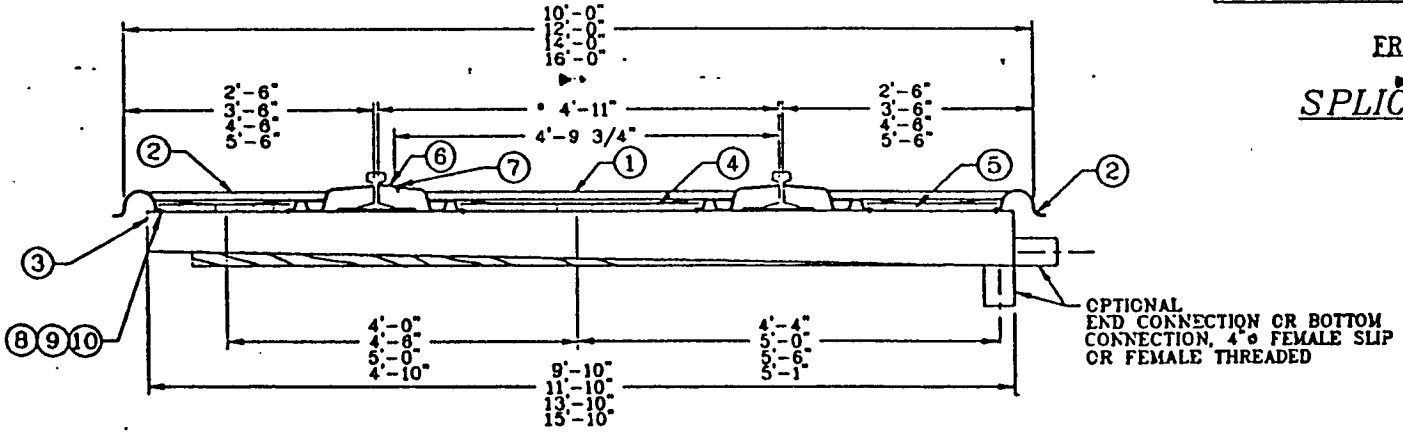

SECTION B – B

* MATCHES WEB TO WEB DIMENSION OF EXISTING TRACK

ITEM	QTY	DESCRIPTION
11	1	10.3 OZ. SILICONE CARTRIDGE
10	12	5/16", HEX NUT, (SS)
9	24	5/16", FLAT WASHER, (SS)
8	12	5/16" – 18 X 1 1/4", HEX HEAD BOLT, (SS)
7	32	#10 X 1", HEX HEAD SELF-DRILLING SCREWS, (SS)
6	1	FLASHING, CENTER PAN, 3 1/2" X 40'-2", (FRP)
5	2	GRATING, 12" X 14" X 1", (FRP)
4	1	GRATING, 12" X 36" X 1", (FRP)
3	1	POSI-PIPE, OPEN ACCESS
2	2	SIDE PAN, END/END, STD., X 40'-9", (FRP)
1	1	CENTER PAN, END/END, STD., X 40'-9", (FRP)

PROPERTY OF
SYNTECHNICS, INC.

THIS PRINT OR DRAWING IS THE PROPERTY OF SYNTECHNICS, INC. AND IS CONFIDENTIAL OR PROPRIETARY INFORMATION. IT IS NOT TO BE COPIED, REPRODUCED, USED OR DISCLOSED IN WHOLE OR IN PART, UNLESS IN REFERENCE TO CONTRACTS OR PROPOSALS OF THIS COMPANY. NOTHING DISCLOSED HEREIN WHICH IS NOT PUBLICLY AVAILABLE MAY BE USED WITHOUT WRITTEN PERMISSION.

REV	DATE	BY	APP'D	DESCRIPTION

SYNTECHNICS INC.
A TRINITY INDUSTRIES, INC. COMPANY
700 TERRACE LANE
PADUCAH, KY.
42003
(502)898-7303

SALES DRAWING
OPEN ACCESS
FRP TRACK COLLECTOR PAN SYSTEM
GENERAL ARRANGEMENT & DETAIL

DRAWN	APP'D	SCALE	DATE REVISED	DR. NO.	SHEET
RFW	DS	NONE	4-26-96	A219-000-07	1 of 1

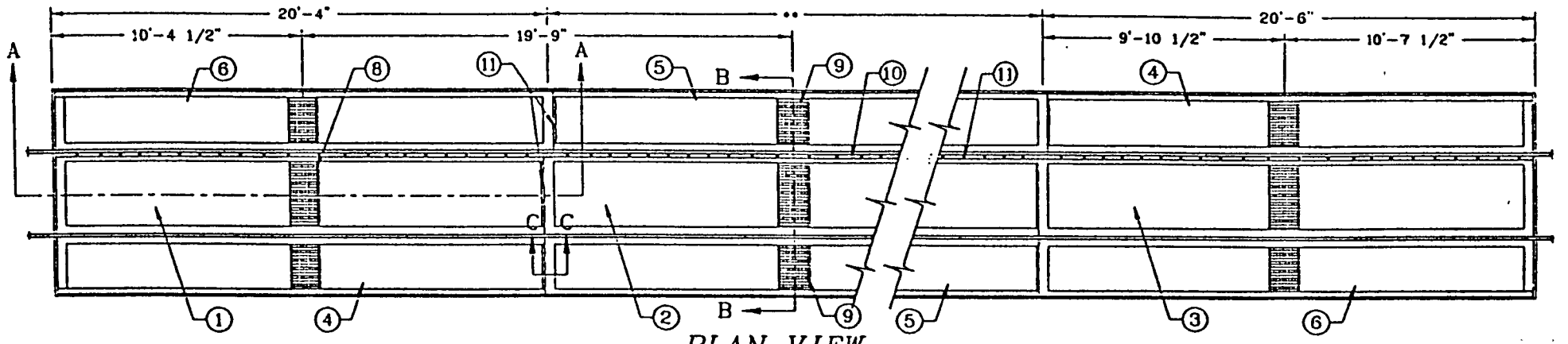

PLAN VIEW

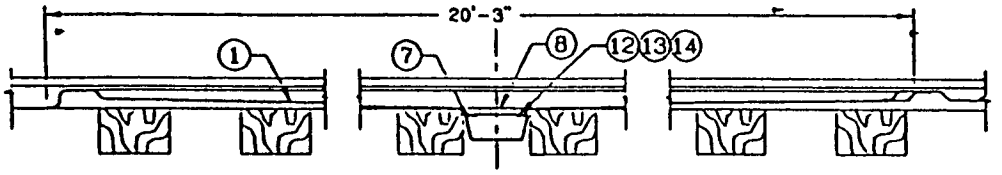

SECTION A – A

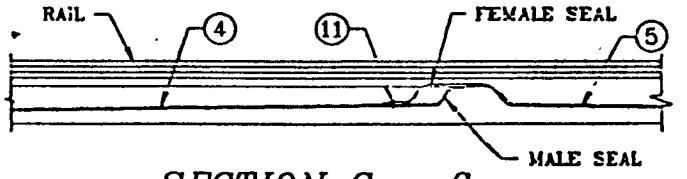

SECTION C – C

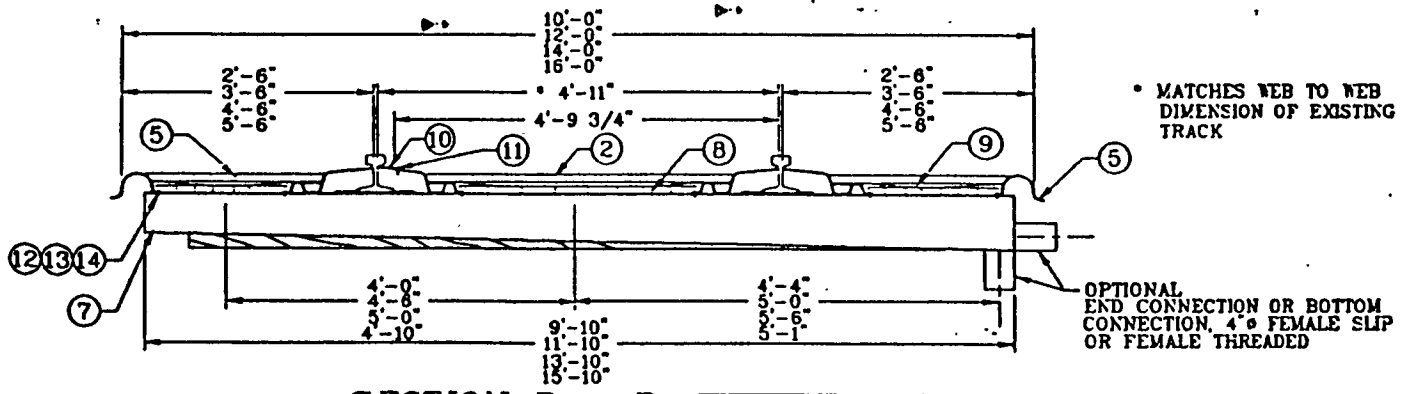

SECTION B – B

• MATCHES WEB TO WEB DIMENSION OF EXISTING TRACK

•• VARIES ACCORDING TO SYSTEM LAYOUT

ITEM	QTY	DESCRIPTION
15	••	10.3 OZ. SILICONE CARTRIDGE
14	••	5/16", HEX NUT, (SS)
13	••	5/16", FLAT WASHER, (SS)
12	••	5/16" – 18 X 1 1/4", HEX HEAD BOLT, (SS)
11	••	#10 X 1", HEX HEAD SELF-DRILLING SCREWS, (SS)
10	••	FLASHING, CENTER PAN, 3 1/2" X 20'-7", (FRP)
9	••	GRATING, 12" X __ X 1", (FRP)
8	••	GRATING, 12" X 36" X 1", (FRP)
7	••	POSI-PIPE, OPEN ACCESS
6	••	SIDE PAN, FEMALE/END, STD., X 21'-0", (FRP)
5	••	SIDE PAN, FEMALE/MALE, STD., X 20'-4", (FRP)
4	••	SIDE PAN, END/MALE, STD., X 20'-4", (FRP)
3	••	CENTER PAN, FEMALE/END, STD., X 21'-0", (FRP)
2	••	CENTER PAN, FEMALE/MALE, STD., X 20'-4", (FRP)
1	••	CENTER PAN, END/MALE, STD., X 20'-4", (FRP)

PROPERTY OF
SYNTECHNICS, INC.
THIS PRINT OR DRAWING IS THE PROPERTY OF SYNTECHNICS, INC., AND IS CONFIDENTIAL OR PROPRIETARY INFORMATION. IT IS NOT TO BE COPIED, REPRODUCED, USED OR DISCLOSED, IN WHOLE OR IN PART, UNLESS IN REFERENCE TO CONTRACTS OR PROPOSALS OF THIS COMPANY. NOTHING DISCLOSED HEREIN WHICH IS NOT PUBLICLY AVAILABLE MAY BE USED WITHOUT WRITTEN PERMISSION.

REV	DATE	BY	APP'D	REVISED TO

SYNTECHNICS INC.
A TRINITY INDUSTRIES, INC. COMPANY
700 TERRACE LANE
PADUCAH, KY.
42003
(502)898-7303

TITLE
SALES DRAWING
OPEN ACCESS
FRP TRACK COLLECTOR PAN SYSTEM
GENERAL ARRANGEMENT

DRAWN BY	APP'D	SCALE	DATE REVISED	DR. NO.	SHEET NO. OF	REV
		NONE	4-26-96	A219-000-08	1 of 1	

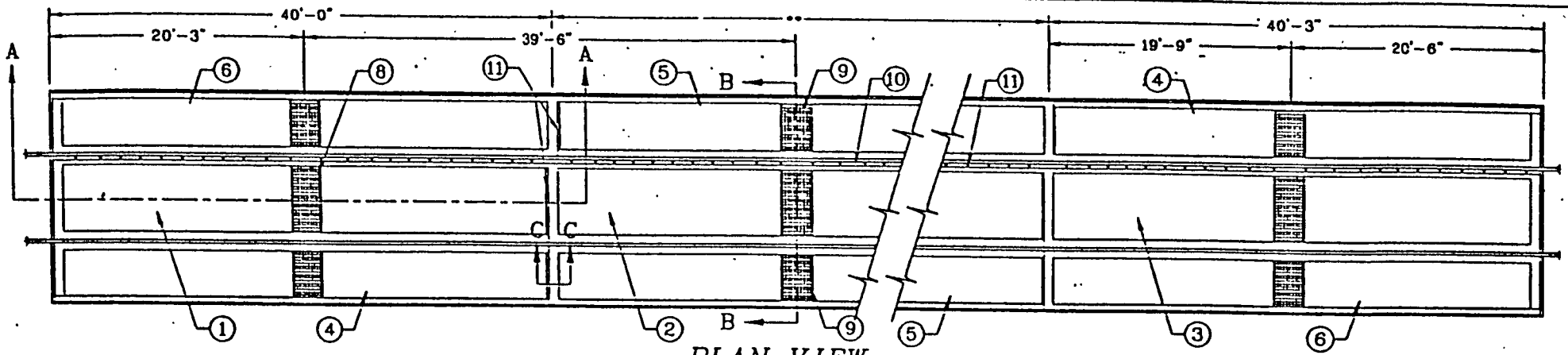

PLAN VIEW

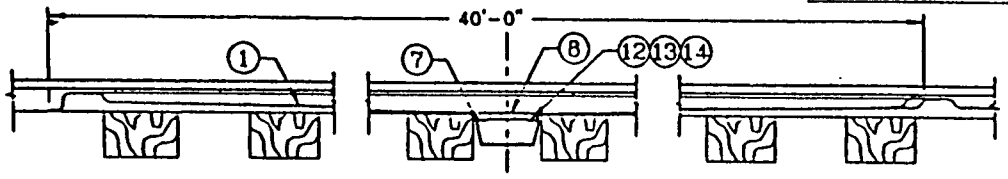

SECTION A – A

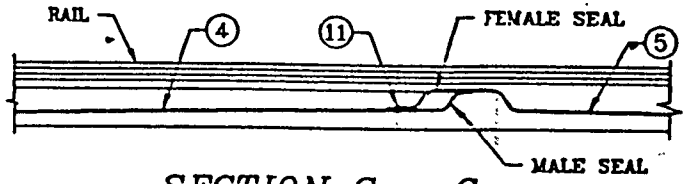

SECTION C – C

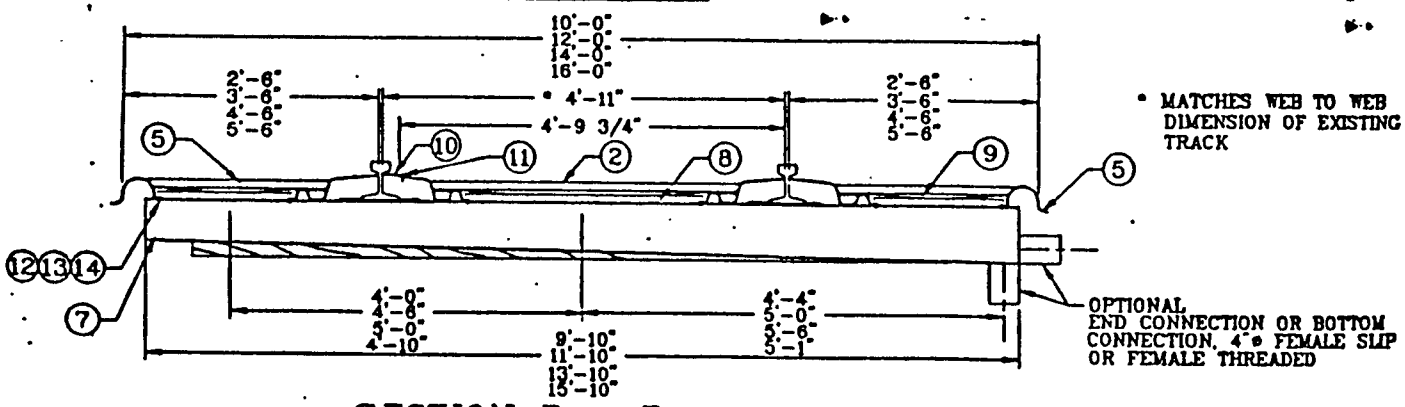

SECTION B – B

• MATCHES WEB TO WEB DIMENSION OF EXISTING TRACK

•• VARIES ACCORDING TO SYSTEM LAYOUT

ITEM	QTY	DESCRIPTION
15	••	10.3 OZ. SILICONE CARTRIDGE
14	••	5/16", HEX NUT, (SS)
13	••	5/16", FLAT WASHER, (SS)
12	••	5/16" – 18 X 1 1/4", HEX HEAD BOLT, (SS)
11	••	#10 X 1", HEX HEAD SELF-DRILLING SCREWS, (SS)
10	••	FLASHING, CENTER PAN, 3 1/2" X 40'-2", (FRP)
9	••	GRATING, 12" X 14" X 1", (FRP)
8	••	GRATING, 12" X 36" X 1", (FRP)
7	••	POST-PIPE, OPEN ACCESS
6	••	SIDE PAN, FEMALE/END, STD., X 40'-9", (FRP)
5	••	SIDE PAN, FEMALE/MALE, STD., X 40'-1", (FRP)
4	••	SIDE PAN, END/MALE, STD., X 40'-1", (FRP)
3	••	CENTER PAN, FEMALE/END, STD., X 40'-9", (FRP)
2	••	CENTER PAN, FEMALE/MALE, STD., X 40'-1", (FRP)
1	••	CENTER PAN, END/MALE, STD., X 40'-1", (FRP)

PROPERTY OF
SYNTECHNICS, INC.
THIS PROPY OF DRAWING IS THE PROPERTY OF SYNTECHNICS INC., AND IS CONFIDENTIAL OR PROPRIETARY INFORMATION. IT IS NOT TO BE COPIED, REPRODUCED, USED OR DISCLOSED, IN WHOLE OR IN PART, UNLESS IN REFERENCE TO CONTRACTS OR PROPOSALS OF THIS COMPANY. NOTHING DISCLOSED HEREIN WHICH IS NOT PUBLICLY AVAILABLE MAY BE USED WITHOUT WRITTEN PERMISSION.

REV	DATE	BY	APP'D	DESCRIPTION

SYNTECHNICS INC.
A TRINITY INDUSTRIES, INC. COMPANY
700 TERRACE LANE
PADUCAH, KY.
42003
(502)898-7363

SALES DRAWING
OPEN ACCESS
FRP TRACK COLLECTOR PAN SYSTEM
GENERAL ARRANGEMENT & DETAIL

DRAWN	APP'D	SCALE	DATE	DWG NO	SHEET
JS		NONE	4-26-96	A219-000-09	1 of 1

FRP vs Steel Comparison

Listed below are four major areas where a comparison of FRP and steel will show the overall superiority of the FRP pan system.

I. FUNCTIONAL DESIGN

The track collector pan system's function is as an apron collecting spilled or dripped fuel, chemicals, etc., and funneling the liquid to an underground drainage system which leads to a treatment facility. The track collector pan system must provide positive collection under all weather conditions.

		SYNTECHNICS	STEEL
1.	Pan Sections	Single piece center pans; single piece side pans.	Four piece center pans; two piece side pans.
2.	Hold downs and fasteners	Center pans are held by friction between the rails; side pans are held in place by backfill for Type II, III, IV, & V Systems. Center pans are held by flashing; side pans are held in place by backfill for Posi-Drain® System.	Pans are held together with short metal screws.
3.	Open non-sealed area	None.	Eight per pan section - four per center pan; two per side pan.
4.	Joint Sealer	None required for Type II, III, IV, & V Systems. Sealer required for Posi-Drain® System.	Sealant required.

FRP vs Steel Comparison (cont)

II. MATERIAL LONGEVITY

The track collector pan applications are in a severe industrial environment and the pans themselves are subject to constant moisture, freezing cycles, and caustic chemicals.

		SYNTECHNICS	STEEL
1.	Material Degradation	The resin systems used for the FRP pans are designed around the particular environment to which they will be exposed in a given industrial or railroad complex.	Present steel pans can be made only from steel thus not permitting them to be placed in an environment that could be corrosive to steel.
2.	Surface Penetration	None for Type II, III, IV, & V Systems. Center pan requires flashing fasteners for Posi-Drain® System.	Fasteners penetrate the surface of the center and side pans.

III. SAFETY

Working conditions around railroads require strict safety procedures. Because of the procedures the track collector pans should never be walked on. A crosswalk/crossdrain has been provided for this circumstance.

		SYNTECHNICS	STEEL
1.	Non-skid surface	Yes.	No.
2.	Exposed sharp edges	None.	Joints have exposed sharp edges.

FRP vs Steel Comparison (cont)

III. SAFETY (cont)

3.	Exposed sharp corners	None.	Center pan joint has exposed sharp corners.
4.	Exposed open areas	None.	Eight per pan section - four per center pans and two per each side pan.

IV. REPAIRABILITY

Each system must be repairable in the field for the system may be subjected to abuse on a variable basis.

		SYNTECHNICS	STEEL
1.	Repairability	Yes	Yes
2.	Experience required to repair	None to very little.	Minor Welding.
3.	Emergency repair kits	Yes	Unknown
4.	Replace-ability	Limited stock on hand.	Unknown

Overall, feature by feature, the SynTechnics Track Collector Pan system is superior to the steel pan system from either a short term or a long term cost effectiveness viewpoint. The installation of the fiberglass reinforced plastic pan sections compared to steel can be substantially reduced because of the one piece construction. Once the center and side pans are installed, there is no other fastening required to install the system.

The installation is relatively simple and should reduce the cost of the overall project. The pan's longevity will prove the most cost-effective solution to collecting oil, fuels, chemicals, etc., and eliminating ground contamination.

Comparison Chart for Fiberglass Reinforced Plastic, Steel and Concrete Containment Systems

	FRP Type II, III, IV, & V	FRP Posi-Drain® & Open-Access	Steel	Concrete
Modular Pan sections available	Yes: 20 and 40 foot nominal	Yes: 20 and 40 foot nominal	Yes: 20 foot nominal	Limited; pored in place mostly
Hold downs and fasteners	Center pans are held in place by friction; side pans are held by backfill	Center pans are held in place by flashing; side pans are held by backfill	Pans are held in place and held together with short metal screws	None; poured in place systems only
Open non sealed areas	Minimal areas around splice bars	Minimal areas around splice bars	Four per center pan, two per side pan, and minimal areas around splice bars	None; however, unless coated, concrete is porous and will "soak" materials in
Joint Sealer	None required	Sealant required	Sealant required	Sealant required
Material Degradation	Resin systems are chosen for particular service, thus no degradation will occur	Resin systems are chosen for particular service, thus no degradation will occur	Systems can be placed only in areas where material is not corrosive to steel	Coating must be applied to prevent degradation of the concrete
Material Durability	System "floats" with the rail thus no pressure or weight is transferred to the system	System "floats" but has a firm drain connection that may cause pressure during movement of cars	System "floats" somewhat but has areas where the attachments cause pressure to be applied during movement of the cars	System is fixed, therefore receives tremendous pressure during movement of cars, cracking and fracturing will occur
Surface Penetrations	None	Fasteners to hold the flashing, transverse joint, and Posi-Pipe together	Fasteners to hold the pans in place and together; possibly as many as 50 per 20 foot section	None
Non Skid surface	Yes	Yes	No	Yes
Exposed Sharp Edges	None	None	Side pan vertical edge and center pan longitudinal joint have exposed sharp edges	None
Tools required for installation	Small hand tools	Small hand tools	Welding equipment, hand tools, and crane equipment for proper placement	Contractor and contractors equipment required
Expertise required for installation	None	None	Welding experience required	Concrete experience required
Repairable	Yes	Yes	Yes	Yes
Experience required to repair	None to very little	None to very little	Welding experience required	Concrete experience required
Emergency Repair Kits available	Yes	Yes	No	No
Replaceable parts	Yes	yes	Yes	No

GUIDE SPECIFICATIONS
TYPE IV & V TRACK COLLECTOR PANS

1.0 GENERAL

1.1 DESCRIPTION OF SYSTEM

A fluid collection system for railroad beds compromised of a center collector pan and a pair of lateral side collector pans, all prefabricated of Fiberglass Reinforced Plastic. The center pan is configured for insertion between the rails, retained there by its own resilience. The side pans are configured for placement against the outsides of each rail, and held there by back fill. The pans will drain into transverse cross drains which interface with piping systems.

1.2 SUBMITTALS

Shop drawings -- General system arrangement and details will be furnished by SynTechnics, Inc. of Paducah, Kentucky.

1.3 INSTALLATION INSTRUCTIONS

Procedures for installation will be furnished by SynTechnics, Inc., of Paducah, Kentucky. Piping and drainage system must be furnished by others. The layout of the drainage system must interface with the hookup points of the track collector pan system -- See installation manual for more details.

2.0 PRODUCT

2.1 FRP TRACK COLLECTOR PAN COMPONENTS

FRP Track Collector Pans will have a **1" per 10' slope built into the pan.** The Track Collector Pans will have no gasket material between the tracks and pans, no fasteners between pans, no fasteners between rail or ties, and shall consist of:

A. One (1) center pan
B. Two (2) side pans
C. Cross drains spaced at 39'-5" intervals
D. Combination drain cover/cross walk grating
E. Drain supports
F. Grade supports

2.2 MATERIAL PHYSICAL CHARACTERISTICS (minimum)

A.	Tensile Strength	15,000 psi
B.	Compressive Strength	15,000 psi
C.	Flexural Strength	15,000 psi
D.	Shear Strength	15,000 psi
E.	Modulus of Elasticity	1.0×10^6 psi
F.	Fiberglass Content	35% by weight

2.3 MATERIALS

A. A thermosetting resin system shall be used and it shall be chemically resistant to the operating environment. The exterior surface shall contain either a polyester gelcoat or a light stabilized resin/veil surface. The laminate shall be suitable for service in a temperature range from -50 degrees F to +130 degrees F.

B. Fiberglass reinforcing shall consist of fiberglass mat, or chopped strand, with alternating layers of woven roving fabric as manufactured by Owens Corning, P.P.G., or equal. Woven roving fabric will be 24 oz./square yard (nominal).

C. Underside of pan shall be 0.010" corrosion resistant veil or equal liner for maximum corrosive soil resistance.

D. Corrosion barrier on collection surfaces of pan will be no less than 0.020". Total material thickness shall be 0.1875" (nominal).

E. Walking surface shall be coarse, textured, antiskid.

F. Recessed safety grating will be incorporated at cross drains, 39'-5" spacing.

2.4 FABRICATION

A. Collector pans shall be as fabricated by SynTechnics, Inc., Paducah, KY or approved equal. All monolithic sections must be fabricated from molds that provide a continuous male/female jointed pan system. The Track Collector Pans will be open contact, male molded, assuring a resin-rich chemical and moisture barrier on both the top and the underside of the pan system.

B. The application of resin and fiberglass must be controlled during fabrication. All fiberglass reinforcements shall be saturated with resin, thus assuring uniform structural properties, proper design thickness, and non-permeability.

3.0 QUALITY ASSURANCE

3.1 MANUFACTURER

The Track Collector Pan manufacturer shall exhibit satisfactory performance on projects of similar magnitude under similar or equal service conditions for a period not less than five (5) years. Acceptable manufacturers based on fabrication methods and experience are SynTechnics, In., of Paducah, Kentucky. Other manufacturers must submit proof of compliance for approval by engineer before the project bid date.

3.2 GUARANTEE

Provide a guarantee against defects in materials and workmanship for a period of not less than one (1) year after installation or one and one-half (1-1/2) years from the date of shipment, whichever occurs first.

GUIDE SPECIFICATIONS
POSI-DRAIN (STANDARD) TRACK COLLECTOR PANS

1.0 GENERAL

1.1 DESCRIPTION OF SYSTEM

A fluid collection system for railroad beds compromised of a center collector pan and a pair of lateral side collector pans, all prefabricated of Fiberglass Reinforced Plastic. The center pan is configured for insertion between the rails, retained there by a removable FRP flashing. The side pans are configured for placement against the outsides of each rail, and held there by back fill. In the middle of each center pan and side pan is a molded-in, recessed drain reservoir which is the low collection point of each pan. Reservoirs are connected together by a sealed Posi-Pipe connector.

1.2 SUBMITTALS

Shop drawings -- General system arrangement and details will be furnished by SynTechnics, Inc., of Paducah, Kentucky.

1.3 INSTALLATION INSTRUCTIONS

Procedures for installation will be furnished by SynTechnics, Inc., of Paducah, Kentucky. Piping and drainage system must be furnished by others. The layout of the drainage system must interface with the hookup points of the track collector pan system -- See installation manual for more details.

2.0 PRODUCT

2.1 FRP TRACK COLLECTOR PAN COMPONENTS

FRP Track Collector Pans will have a **slope built into the pan.** The Track Collector Pans will have a **sealed** Posi-Pipe connector. At pan intersections points, a transverse, overlapping, adjustable **sealed** joint will connect the pans to form the desired length system.

A. One (1) center pan
B. Two (2) side pans
C. One (1) Posi-Pipe connector
D. One (1) drainage connector (attached to Posi-Pipe)
E. Three (3) removable reservoir drain covers

2.2 MATERIAL PHYSICAL CHARACTERISTICS (minimum)

A.	Tensile Strength	15,000 psi
B.	Compressive strength	15,000 psi
C.	Flexural strength	15,000 psi
D.	Shear strength	15,000 psi

E.	Modulus of Elasticity	1.0×10^6 psi
F.	Fiberglass Content	35% by weight

2.3 MATERIALS

A. A thermosetting resin system shall be used and it shall be chemically resistant to the operating environment. The exterior surface shall contain either a polyester gelcoat or a light stabilized resin/veil surface. The laminate shall be suitable for service in a temperature range from -50° F to +130° F.

B. Fiberglass reinforcement shall consist of fiberglass mat, or chopped strand, with alternating layers of woven roving fabric as manufactured by Owens Corning, P.P.G., or equal. Woven roving fabric will be 24 oz./square yard (nominal).

C. Underside of pan shall be 0.010" corrosion resistant veil or equal liner for maximum corrosive soil resistance.

D. Corrosion barrier on collection surfaces of pan will be no less than 0.020". Total material thickness shall be 0.1875" (nominal).

E. Walking surface shall be coarse, textured, anti-skid.

2.4 FABRICATION

A. Collector pans shall be as fabricated by SynTechnics, Inc., Paducah, KY or approved equal. All components must be fabricated from molds that provide continuous monolithic pan sections. The Track Collector Pans will be open contact, male molded, assuring a resin-rich chemical and moisture barrier on both the top and the underside of the pan system. The Posi-Pipe drain connector shall be fabricated on a continuous mold. End caps and connectors shall be installed in the shop. Drain holes will be pre-drilled.

B. The application of resin and fiberglass must be controlled during fabrication. All fiberglass reinforcements shall be saturated with resin, thus assuring uniform structural properties, proper design thickness, and non-permeability.

3.0 QUALITY ASSURANCE

3.1 MANUFACTURER

The Track Collector Pan manufacturer shall exhibit satisfactory performance on projects of similar magnitude under similar or equal service conditions for a period not less than five (5) years.

Acceptable manufacturers based on fabrication methods and experience are SynTechnics, Inc., of Paducah, Kentucky. Other manufacturers must submit proof of compliance for approval by the engineer before the project bid date.

3.2 GUARANTEE

Provide a guarantee against defects in materials and workmanship for a period of not less than on (1) year after installation or one and one-half (1-1/2) years from the date of shipment, whichever occurs first.

GUIDE SPECIFICATIONS
POSI-DRAIN (OPEN ACCESS) TRACK COLLECTOR PAN SYSTEM

1.0 GENERAL

1.1 DESCRIPTION OF SYSTEM

A fluid collection system for railroad beds compromised of a center collector pan and a pair of lateral side collector pans, all prefabricated of Fiberglass Reinforced Plastic. The center pan is configured for insertion between the rails, retained there by a removable FRP flashing. The side pans are configured for placement against the outsides of each rail, and held there by back fill. In the middle of each center pan and side pan is a molded-in, recessed drain reservoir which is the low collection point of each pan. Reservoirs are connected together by a sealed Posi-Pipe connector. A removable 12" wide reservoir grating cover is installed to cover the 10" wide drain hole in each center and side pan, allowing shovel access in the Posi-Pipe to remove debris or sand build up.

1.2 SUBMITTALS

Shop drawings -- General system arrangement and details will be furnished by SynTechnics, Inc., of Paducah, Kentucky.

1.3 INSTALLATION INSTRUCTIONS

Procedures for installation will be furnished by SynTechnics, Inc., of Paducah, Kentucky. Piping and drainage system must be furnished by others. The layout of the drainage system must interface with the hookup points of the track collector pan system -- See installation manual for more details.

2.0 PRODUCT

2.1 FRP TRACK COLLECTOR PAN COMPONENTS

FRP Track Collector Pans will have a **slope built into the pan.** The Track Collector Pans will have a **sealed** Posi-Pipe connector. At pan intersection points, a transverse, overlapping, adjustable **sealed** joint will connect the pans to form the desired length system. The Posi-Pipe will have a "**open access**" drain, covered by grating.

A. One (1) center pan
B. Two (2) side pans
C. One (1) Posi-Pipe connector
D. One (1) drainage connector (attached to Posi-Pipe)
E. Three (3) removable reservoir grating covers

2.2 MATERIAL PHYSICAL CHARACTERISTICS (minimum)

A.	Tensile Strength	15,000 psi
B.	Compressive Strength	15,000 psi

C.	Flexural Strength	15,000 psi
D.	Shear Strength	15,000 psi
E.	Modulus of Elasticity	1.0×10^6
F.	Fiberglass Content	35% by weight

2.3 MATERIALS

A. A thermosetting resin system shall be used and it shall be chemically resistant to the operating environment. The exterior surface shall contain either a polyester gelcoat or a light stabilized resin/veil surface. The laminate shall be suitable for service in a temperature range from -50° F to +130° F.

B. Fiberglass reinforcement shall consist of fiberglass mat, or chopped strand, with alternating layers of woven roving fabric as manufactured by Owens Corning, P.P.G., or equal. Woven roving fabric will be 24 oz./square yard (nominal).

C. Underside of pan shall be 0.010" corrosion resistant veil or equal liner for maximum corrosive soil resistance.

D. Corrosion barrier on collection surfaces of pan will be no less than 0.020". Total material thickness shall be 0.1875" (nominal).

E. Walking surface shall be coarse, textured, anti-skid.

2.4 FABRICATION

A. Collector pans shall be fabricated by SynTechnics, Inc., Paducah, KY or approved equal. All sections must be fabricated from molds that provide a continuous monolithic pan section. The Track Collector Pans will be open contact, male molded, assuring a resin-rich chemical and moisture barrier on both the top and the underside of the pan system. The Posi-Pipe drain connector shall be fabricated on a continuous mold. End caps and connectors shall be installed in the shop. Drain holes will be pre-drilled.

B. The application of resin and fiberglass must be controlled during fabrication. All fiberglass reinforcements shall be saturated with resin, thus assuring uniform structural properties, proper design thickness, and non-permeability.

3.0 QUALITY ASSURANCE

3.1 MANUFACTURER

The Track Collector Pan manufacturer shall exhibit satisfactory performance on projects of similar magnitude under similar or equal service conditions for a period not less than five (5) years.

Acceptable manufacturers based on fabrication methods and experience are SynTechnics, Inc., of Paducah, Kentucky. Other manufacturers must submit proof of compliance for approval by the engineer before the project bid date.

3.2 GUARANTEE

Provide a guarantee against defects in materials and workmanship for a period of not less than one (1) year after installation or one and one-half (1-1/2) years form the date of shipment, whichever occurs first.

SECTION 02301

EARTHWORK FOR STRUCTURES AND PAVEMENTS

PART 1 GENERAL

1.1 REFERENCES

A. The publications listed below form a part of this specification to the extent referenced. The publications are referred to in the text by the basic designation only.

AMERICAN SOCIETY FOR TESTING AND MATERIALS (ASTM)

ASTM D 422	(1963; R 1990) Particle-Size Analysis of Soils
ASTM D 1557	(1991) Laboratory Compaction Characteristics of Soil Using Modified Effort (56,000 ft-lbf/ft)
ASTM D 1883	(1994) CBR (California Bearing Ratio) of Laboratory-Compacted Soils
ASTM D 2487	(1993) Classification of Soils for Engineering Purposes (Unified Soil Classification System)
ASTM D 2922	(1991) Density of Soil and Soil-Aggregate in Place by Nuclear Methods (Shallow Depth)

NEW JERSEY STATE DEPARTMENT OF TRANSPORTATION (NJDOT)

New Jersey Department of Transportation Standard Specifications for Road and Bridge Construction, 1996

1.2 SUBMITTALS

A. Contractor shall submit laboratory analysis results of soil classification (ASTM D 2487) and Modified Procter analysis (ASTM 1557) of soil prior to compaction and placement of backfill.

1.3 SITE CONDITIONS

1.3.1 Utilities

A. The Contractor shall contact the Contracting Officer 72 hours prior to construction for the location of all existing underground utilities. Movement of construction machinery and equipment over pipes and utilities during construction shall be at the Contractor's risk. The Contractor shall contact the utility companies for locations of their utilities.

SECTION 02302

EXCAVATION, BACKFILLING, AND COMPACTING FOR UTILITIES

PART 1 GENERAL

1.1 REFERENCES

A. The publications listed below form a part of this specification to the extent referenced. The publications are referred to in the text by the basic designation only.

AMERICAN SOCIETY FOR TESTING AND MATERIALS (ASTM)

ASTM D 422	(1963; R 1990) Particle-Size Analysis of Soils
ASTM D 1557	(1991) Laboratory Compaction Characteristics of Soil Using Modified Effort (56,000 ft-lbf/ft)
ASTM D 1883	(1994) CBR (California Bearing Ratio) of Laboratory-Compacted Soils
ASTM D 2487	(1993) Classification of Soils for Engineering Purposes (Unified Soil Classification System)
ASTM D 2922	(1991) Density of Soil and Soil-Aggregate in Place by Nuclear Methods (Shallow Depth)

NEW JERSEY STATE DEPARTMENT OF TRANSPORTATION (NJDOT)

New Jersey Department of Transportation Standard Specifications for road and Bridge Construction, 1996

1.2 SUBMITTALS

A. Contractor shall submit laboratory analysis results of soil classification (ASTM D 2487) Modified Procter analysis (ASTM 1557) of soil prior to compaction and placement of backfill.

1.3 SITE CONDITIONS

1.3.1 Utilities

A. The Contractor shall contact the Contracting Officer 72 hours prior to construction for the location of all existing underground utilities. Movement of construction machinery and equipment over pipes and utilities during construction shall be at the Contractor's risk. The Contractor shall contact the utility companies for locations of their utilities.

Perform work adjacent to privately owned utilities in accordance with procedures outlined by the utility company.

B. For work immediately adjacent to or for excavations exposing a utility or other buried obstruction, excavate by hand. Start hand excavation on each side of the indicated obstruction and continue until the obstruction is uncovered or until clearance for the new grade is assured. Support uncovered lines or other existing work as affected by the contract excavation until approval for backfill is granted by the Contracting Officer. Report damage to utility lines or subsurface construction immediately to the Contracting Officer.

PART 2 PRODUCTS

2.1 SOIL MATERIALS

A. Provide soil materials as specified below free of debris, roots, wood, scrap material, vegetable matter, refuse, soft unsound particles, ice, or other deleterious and objectionable materials.

2.1.1 Backfill

A. Bring trenches to grade indicated on the drawings using material excavated on the site of this project. This material will be considered unclassified and no testing other than for compaction will be required before use as backfill.

2.1.2 Sand Pipe Bedding

A. Clean, coarse-grained sand for pipe bedding shall be classified as Class B type bedding in accoradnce with NJDOT Section 207.

PART 3 EXECUTION

3.1 SURFACE PREPARATION

A. Unless indicated otherwise, remove trees, logs, stumps, shrubs, and brush within the limits of construction. Protect from damage trees and shrubs which are to be saved or which are outside the limits of construction. Do not permit traffic, parking of equipment, and storage of material within the tree drip lines. Merchantable timber shall be cut into logs and shall become the property of the Contractor and shall be removed from the Government property. Brush, refuse, stumps, roots, and unmerchantable timber shall become the property of the Contractor and be removed from the Government property.

3.2 GENERAL EXCAVATION AND TRENCHING

A. Keep excavations free from water while construction is in progress. Notify the Contracting Officer immediately in writing if it becomes necessary to remove rock or hard, unstable, or otherwise unsatisfactory material to a depth greater than indicated.

B. Make trench sides as nearly vertical as practicable except where sloping of sides is allowed. Sides of trenches shall not be sloped from the bottom of the trench up to the elevation of the top of the pipe. Excavate ledge rock, boulders, and other unyielding material to an overdepth at least 6 inches below the bottom of the pipe unless otherwise indicated or specified.

C. Use sand bedding material 6 inch maximum layers to refill overdepths to the proper grade. At the Contractor's option, the excavations may be cut to an overdepth of not less than 4 inches and refilled to required grade as specified. Grade bottom of trenches accurately to provide uniform bearing and support for each section of pipe on undisturbed soil, or bedding material as indicated or specified at every point along its entire length except for portions where it is necessary to excavate for bell holes and for making proper joints.

D. Dig bell holes and depressions for joints after trench has been graded. Dimension of bell holes shall be 1/2 inch greater than length, width, and depth of bell or as required for properly making the particular type of joint to ensure that the bell does not bear on the bottom of the excavation. Trench dimensions shall be as presented on the Engineering Drawings.

3.3 BACKFILLING

A. Construct backfill in two operations, initial and final as indicated and specified in this section. Place initial backfill in 6 inch maximum loose lifts to one foot above pipe unless otherwise specified. Ensure that initially placed material is tamped firmly under pipe haunches. Bring up evenly on each side and along the full length of the pipe. Ensure that no damage is done to the utility or its protective coating.

B. Place the remainder of the backfill (final backfill) in 9 inch maximum loose lifts unless otherwise specified. Compact each loose lift as specified in the paragraph entitled "General Compaction" before placing the next lift. Do not backfill in freezing weather or where the material in the trench is already frozen or is muddy, except as authorized.

C. Coordinate backfilling with testing of utilities. Testing of utility lines shall be complete before final backfilling.

3.4 COMPACTION

A. Use hand-operated, plate-type, vibratory, or other suitable hand tampers in areas not accessible to larger rollers or compactors. Avoid damaging pipes and protective pipe coatings. Compact material in accordance with the following unless otherwise specified. If necessary, alter, change, or modify selected equipment or compaction methods to meet specified compaction requirements.

3.4.1 Compaction of Pipe and Conduit Bedding

A. In rock, compact to 95 percent of ASTM D 1557 maximum.

Perform work adjacent to privately owned utilities in accordance with procedures outlined by the utility company.

B. For work immediately adjacent to or for excavations exposing a utility or other buried obstruction, excavate by hand. Start hand excavation on each side of the indicated obstruction and continue until the obstruction is uncovered or until clearance for the new grade is assured. Support uncovered lines or other existing work as affected by the contract excavation until approval for backfill is granted by the Contracting Officer. Report damage to utility lines or subsurface construction immediately to the Contracting Officer.

PART 2 PRODUCTS

2.1 MATERIALS

2.1.1 Soil Materials

A. All on-site materials reused as backfill shall be free from debris, roots, wood, scrap materials, vegetable matter, refuse or frozen material. Maximum particle size permitted is 3inches. Use excavated material from the site for the work indicated when material falls within the requirements specified herein.

PART 3 EXECUTION

3.1 SURFACE PREPARATION

3.1.1 Clearing and Grubbing

A. Unless indicated otherwise, remove trees, logs, stumps, shrubs, and brush within the limits of construction. Protect from damage trees and shrubs which are to be saved or which are outside the limits of construction. Do not permit traffic, parking of equipment, and storage of material within the tree drip lines. Merchantable timber shall be cut into logs and shall become the property of the Contractor and shall be removed from the Government property. Brush, refuse, stumps, roots, and unmerchantable timber shall become the property of the Contractor and removed from the Government property.

3.1.2 Subgrade Proof Rolling

A. After removal of topsoil or other overburden, proof roll the existing subgrade with six passes of a minimum 15 ton pneumatic-tired roller. Operate the roller in a systematic manner to assure the number of passes over all areas, and at speeds between 2.5 and 3.5 miles per hour. When proof rolling under structures, one-half of the passes made with the roller shall be in a direction perpendicular to the other passes. Proof rolling shall be done in the presence of the Contracting Officer.

B. Rutting or pumping shall indicate unsatisfactory material and that material shall be undercut as directed by the Contracting Officer, to a depth of 6 inches, and replaced with the appropriate fill material.

C. Perform proof rolling only when weather conditions permit. Do not proof roll wet or saturated subgrades. Materials degraded by proof rolling a wet or saturated subgrade shall be replaced by the Contractor as directed by the Contracting Officer at no cost to the Government. Notify the Contracting Officer 3 days prior to proof rolling.

3.2 EXCAVATION

A. Excavate to contours and dimensions indicated. Keep excavations free from water while construction is in progress. Notify the Contracting Officer immediately in writing in the event that it becomes necessary to remove rock, hard material, or other material defined as unsatisfactory to a depth greater than indicated.

B. Excavate soil disturbed or weakened by construction operations or soils softened from exposure to weather. Refill with appropriate fill and compact as specified herein.

3.3 BORROW MATERIALS

A. Select borrow materials to meet requirements and conditions of the particular backfill material to be used. Obtain borrow materials from sources off of Government property. No borrow shall be obtained within the limits of the project site.

3.4 FILLING AND BACKFILLING

3.4.1 Subgrade Preparation

A. Scarify the underlying subgrade surface to a depth of 6 inches before the fill is started. Step, bench, or break up sloped surfaces steeper than one vertical to 4 horizontal so that the fill material will bond with or be securely keyed to the existing material. Scarify existing surface to a minimum depth of 6 inches if subgrade density is less than the degree of compaction specified and recompact.

B. When the subgrade is part fill and part excavation or natural ground, scarify the excavated or natural ground portion to a depth of 6 inches and recompact as specified for the adjacent or overlying fill.

C. Compact with equipment well suited to the soil being compacted. Moisten or aerate material as necessary to provide the moisture content that will readily facilitate obtaining the specified compaction with the equipment used.

3.4.2 Fill and Backfill Beside Structures

A. Place required backfill material adjacent to structures and compact in a manner that prevents wedging action or eccentric loading upon or against the structures. Step or serrate slopes bounding or within areas to be backfilled to prevent sliding of the fill.

3.4.2 Compaction of Backfill

A. Compact initial backfill material surrounding pipes to 90 persent ASTM D 1557 maximum density except where bedding and backfill are the same material. Where bedding and backfill are the same material, compact initial backfill to the density of the bedding.

B. For utilities under railroad and pavements compact succeeding layers of final backfill as specified under Section 02301, "Earthwork for Structures and Pavements."

3.5 FINISH OPERATIONS

3.5.1 Grading

A. Finish to grades indicated within one-tenth of a foot. Grade existing grades that are to remain but have been disturbed by the Contractor's operations.

3.6 FIELD QUALITY CONTROL

A. Test sand bedding for conformance to specified requirements. Test beddingfor moisture-density relations in accordance with ASTM D 1557.

B. Perform at least one of each of the required tests for each material provided. Perform sufficiently in advance of construction so as not to delay work. Provide additional tests as specified above for each change of source.

C. Perform one density and moisture test per 50 linear feet in each lift in accordance with ASTM D 2922 for bedding and backfill in trenches

B. Moisten or aerate material as necessary to provide the moisture content that will readily facilitate obtaining the specified compaction with the equipment used.

C. Do not place material on surfaces that are muddy, frozen, or contain frost.

D. Do not use equipment for backfilling operations or for the formation of embankments against structures that will overload the structure. Backfilling against concrete will be done only after approval has been obtained from the Contracting Officer.

3.4.3 General Fill

A. Construct backfill at the locations and to lines and grades indicated. Use only approved materials in constructing backfill on the prepared subgrade. Place satisfactory material in horizontal lifts not exceeding 8 inches in loose depth. Do not place material on surfaces that are muddy, frozen, or contain frost. Compact with equipment well suited to the soil being compacted. Moisten or aerate material as necessary to provide the moisture content that will readily facilitate obtaining the specified compaction with the equipment used. Compact each lift as specified before placing the overlaying lift.

3.4.4 Final Backfill for Utilities

A. Construct backfill (final backfill) for storm drains, manholes, utility lines, and other utility appurtenances using the material and compaction requirements specified herein for the adjacent or overlying work. Bedding and initial backfill requirements are specified in Section 02302, "Excavation, Backfilling, and Compacting for Utilities."

3.4.5 Weather Limitations

A. Backfill shall not be constructed when weather conditions detrimentally affect the quality of the finished course. Place backfill only if the atmospheric temperature is above freezing in the shade and is rising.

B. Do not construct backfill in the rain or on saturated subgrades. If weather conditions are windy, hot or arid, with high rate of evaporation, schedule the placement in cooler portions of the day and furnish equipment to add moisture to the backfill during and after placement.

3.5 COMPACTION

A. Compact each layer or lift of material specified so that the in-place density tested is not less than the percentage of maximum density specified in Table III.

TABLE III

Percent ASTM D 1557
Maximum Density

	Cohesive Material	Cohesionless Material
Fill, Embankment and Backfill:		
General Fill under steps and parking lots	[90]	[95]
General Fill under sidewalks and grassed areas	[85]	[90]
Subgrade (Top of fill, backfill or cut):		
Under Parking Lots (top 12 inches)	[93]	[98]

3.6 FINISH OPERATIONS

3.6.1 Site Grading

A. Grade to finished grades indicated within 0.10 foot. Grade areas to drain water away from structures. Existing grades which are to remain but are disturbed by the Contractor's operations shall be restored.

3.6.2 Finishing Subgrades Under Structures and Pavements

A. Finish surface of top lift of fill or top of subgrade to the elevation and cross section indicated. Finished surface shall be smooth and of uniform texture. Lightly scarify or blade the finished surface to bring the finished surface to within 0.05 foot of the indicated grade and to eliminate imprints made by compaction and shaping equipment. Surface shall show no deviations in excess of 3/8 inch when tested with a 10 foot straightedge.

3.6.3 Protection of Surfaces

A. Protect newly graded areas from traffic, erosion, and settlements that may occur and as required. Repair or reestablish damaged grades, elevations, or slopes prior to acceptance of work.

3.7 FIELD QUALITY CONTROL

3.7.1 Sampling

A. Furnish one 50 pound composite sample and submit samples, in the number directed, whenever the source or character of the backfill material changes. Contain each sample in a clean container and fasten to prevent loss of material. Tag each sample for identification. Tag shall contain the following information:

Contract No. _____
Sample No. _____
Date of Sample _____
Sampler _____
Source _____
Intended Use _____

3.7.2 Tests

Table IV

Material Type	Location of Material	Test Frequency
Subgrades	Site	One test per lift per 2,000 square yards.
Borrow	Any	One test per lift per 500 cubic yards placed.
Native soil subgrade	Any	One test or one test per 5,000 square feet whichever is greater.

A. Test backfill using ASTM D 2487 gradation limits. Test backfill materials for moisture density relations using ASTM D 1557.

B. Perform one of each of the required tests for each material used when directed. Provide additional tests as specified above for each source change.

C. Perform density tests in randomly selected locations using ASTM D 2922 as follows: one test per 5,000 square feet in each layer of lift.

D. The location of field density tests on the established grid for the unit of fill being tested will be selected by the Contracting Officer.

3.7.3 Acceptance

A. Acceptance of the compacted materials shall be determined in each unit by the results of a series of three consecutive field in-place density tests. Method of in-place tests shall be in accordance with paragraph "Tests." The average of three tests shall equal or

exceed the specified average density requirement. Fill shall be accepted or rejected based on test location determined by the Contracting Officer with a complete area being reworked in the event of rejection.

SECTION 02451

FIBERGLASS TRACK PANS

PART 1 - General

1.01 Summary

A. The work described in this section covers the furnishing of all labor, material, equipment and incidentals necessary for installation of fiberglass track pans for secondary containment of rail car transfer operations involving oily water and No. 2 diesel fuel.

B. In general, the work shall include the following:

1. provision and installation of ten foot wide track pans assembles which include: 1) a center pan; 2) two side pans; 3) cross drains; 4) drain cover/cross walk grating; and 5) drain supports, as shown on the Engineering Drawings.

1.02 Reference Standards

A. All standards and certification are in accordance with the American Society for Testing and Materials (ASTM) and accepted construction practices.

1.03 Submittals

A. Shop drawings of selected track pans and accessories demonstrating compliance with the configuration presented on the Engineering Drawings.

B. Manufacturer's chemical resistance data consistent with the proposed use.

C. Manufacturer's installation guide for track pan installation.

1.04 Quality Assurance

A. Certification from manufacturer that all equipment and materials are in compliance with the specifications.

PART 2 - Products

2.01 General

A. The configuration of the track pans shall be in accordance with the configuration presented on the Engineering Drawings.

2.02 Materials

The Engineer shall be provided with all shipping labels and information for material delivered to the site by the Contractor. The Engineer will inspect all materials and reserves the right to reject any material that is damaged or does not meet the specified criteria or configuration presented on the Engineering Drawings.

A. Track Pans

The material used to fabricate the track pans shall be an isophthalic resin with an exterior surface shall containing either a polyester gelcoat or light stabilized resin/veil surface. The laminate should be suitable for service in a temperature range from -50 degrees F to +130 degrees F.

Fiberglass reinforcing shall consist of fiberglass mat, or chopped strand, with alternating layers of woven roving fabric. The woven roving fabric shall be no less than 24 oz./square yard. The underside of the pan shall be 0.010 corrosion resistant C veil.

The corrosion barrier on collection surfaces of the pans will be no less than 0.020 inches. The total material thickness shall be no less than 0.1875 inches. The walking surface shall be coarse, textured, anti-skid.

Track pan material shall meet the following criteria:

Parameter	**Criteria**
tensile strength	15,000 psi.
compressive strength	15,000 psi.
flexural strength	15,000 psi.
shear strength	15,000 psi.
Young's Modulus of Elasticity	1.0×10^6 psi.
fiberglass content	35% by weight.

PART 3 - Execution

3.01 Inspections

Each system component shall be given requisite factory tests as necessary to determine that the work and materials are free from defects and to establish that the design and construction meet the requirements of the specification and intended use. The Engineer shall have the right to reject materials that do not follow the required configuration or are constructed to the required specifications.

3.02 Execution

Installation of the track pans shall be in accordance with manufacturer's installation instructions. These installation procedures shall be approved by the Engineer prior to start of construction.

3.03 Warranty

The contractor shall warrant the equipment and materials of construction for a period of 2 years. The contractor shall approve of the installation of any subcontractors. The contractor's warranty shall not be diminished by installation work by other subcontractors.

* * * * * *

END OF SECTION

SECTION 02635

HDPE DOUBLE CONTAINMENT PIPING AND STRUCTURES

PART 1 - General

1.01 Summary

A. The work described in this section covers the furnishing of all labor, material, equipment and incidentals necessary for the provision and installation of high density polyethylene (HDPE) double containment piping and structures.

B. In general, the work shall include the furnishing and installation of :

1. HDPE fused double containment piping;

2. HDPE drain inlet structure; and

3. fiberglass grate.

1.02 Reference Standards

A. All standards and certification are in accordance with the American Society for Testing and Materials (ASTM) and accepted construction practices.

1.03 Submittals

A. Manufacturer certification of HDPE pipe, drain inlet and fiberglass grate properties in accordance with specified criteria.

B. Manufacturer chemical resistance data demonstrating compatibility with oily water and No. 2 diesel fuel.

PART 2 - Products

2.01 General

The HDPE piping system and structures shall be constructed as shown on the Engineering Drawings.

2.02 Materials

The Engineer shall be provided with all shipping labels and information for material delivered to the site by the Contractor. The Engineer will inspect all materials and reserves the right to reject any material that is damaged or does not meet the specified criteria or configuration presented on the Engineering Drawings.

A. Piping

The pipe used to fabricate the system shall be high density, extra high molecular weight polyethylene dual containment pipe. The pipe and fittings shall conform to ASTM D-3350 with minimum cell classification values of 345434C. The pipe and fittings shall be made of the same polyethylene resin base which meets this specification.

The provided piping shall meet the following criteria:

Parameter	**Criteria**	**Reference**
density	0.955 gms/ccm	ASTM D-1505
melt index	<0.15 gms/10 min	ASTM D1238 condition 3.2.3
flexural modulus	135,000 psi	ASTM D-638
tensile strength	3,200 psi	ASTM D-638.
environmental stress crack resistance (ESCR)	5,000 hours with zero -	ASTM D-1693 Condition C.
hydrostatic design basis	1,600 psi at 23C	ASTM D-2837.
ring specimen ESCR	0 failures in >1,000 hours.	ASTM F-1248
fused material strength		ASTM C-1147-95

B. Drain Inlet Structure

The material used to fabricate the inlet structure shall be high density, high molecular weight polyethylene material. The pipe and fittings shall conform the material criteria stated above for the HDPE piping.

C. Fiberglass Grate

The material used to fabricate the grate shall be fiberglass roving reinforced ester. The grating shall be one piece construction with the tops of the bearing bars and crossbars in the same plane. The resin system shall be fire-retardant ester. The Flame Spread Index shall be 25 or below. The grating

shall be secured to supports with stainless steel saddle clips. The grating shall be capable of carrying a 100 PSF uniform load on a 29" span with a maximum deflection of 0.25".

PART 3 - Execution

3.01 Inspection

Each system component shall be given requisite factory tests as necessary to determine that the work and materials are free from defects and to establish that the design and construction meet the requirements of the specification and intended use. The Engineer has the right to reject any material that does not meet the specified criteria at no cost to the owner.

3.02 Execution

The Contractor shall demonstrate experience in the installation double containment HDPE piping either by obtaining a manufacturer's certification for pipe installation or providing proof of previous experience to the satisfaction of the Engineer.

A. Pipe Fusing

The prefabricated high density polyethylene dual contained pipe shall be designed for simultaneous butt fusion welding. Pipe joints and fittings shall be supplied to the job site ready for simultaneous butt fusion. Carrier pipe support shall be with full round centralizers welded to the carrier pipe.

B. Air Tests

i. Gravity

The carrier (inside pipe) shall be tested at 20 feet of head or 10 psi air for gravity systems. Air pressure should be allowed to equalize for 10 minutes, then monitor the pipe for the test period of 10 minutes, during which no drop in pressure shall be allowed.

ii. Pressure

For pressure systems, use a hydrostatic test of 1.5 times the working pressure rating for the lowest pressure rated component in the system. The system should be brought up to pressure and allowed to equalize for 3 hours, then the pressure shall be monitored for a 3-hour test period. Since HDPE is a flexible material, pressure drop can occur for reasons other than a leak, such as a temperature change. If no significant pressure

drops occur or there are no visual signs of leaks during the final test period, then the pipeline passes the test.

C. Placement into Trench

Trenching shall be performed in accordance with engineering drawings. The bedding shall be as shown on engineering drawings.

D. Backfilling

Backfilling shall be in accordance with the earthwork specifications.

E. Secondary Air Test

Secondary air tests, identical to the air tests described previously, shall be performed to confirm proper installation of the system.

3.03 Warranty

The contractor shall warrant the equipment and materials of construction for a period of 2 years. The contractor shall approve of the installation of any subcontractors. The contractor's warranty shall not be diminished by installation work by other subcontractors.

* * * * * *

END OF SECTION

SECTION 02730

PRECAST CONCRETE

PART 1 - GENERAL

1.1 Summary

A. The work covered by this section consists of furnishing precast concrete structures with reinforcement, complete with frames and covers, manhole steps and appurtenances of the type scheduled with construction as shown on the Engineering Drawings.

1.2 References

A. The publications listed below form a part of the specification to the extent referenced. The publications are referred to in the text by basis designation only.

American Society for Testing and Materials (ASTM).

ASTM A48-83	Specification for gray iron castings.
ASTM C91-89	Specification for masonry concrete.
ASTM C144-89	Specification for aggregate for masonry mortar.
ASTM C478-88a	Specification for precast reinforced concrete manhole sections.

1.3 Submittals

A. Prior to any field construction, the Contractor shall submit for review construction drawings, design calculations and conformance data for precast sections, slabs, steps, frames and covers, location and size of base section opening and manhole step locations.

B. The submittals shall include such information which will ensure compliance with the codes, standards and specifications designated in the following section "PRODUCTS".

C. Manufacturer's technical information regarding sealants, gaskets, and waterproofing.

PART 2 - PRODUCTS

2.1 General

A. Precast structures shall be constructed as shown on the Contract Drawings.

2.2 Materials

2.2.1 Precast concrete sections and slabs shall be constructed and reinforced in accordance with ASTM C-478-88a, with a minimum wall thickness of 5 inches for structures 10'-0 or less in depth and 8 inches for manholes greater than 10'-0 depth. Sections shall be water-proofed on the exterior with a minimum of 2 coats of Koppers 300M or equal applied per the coating manufacturer's specifications.

2.2.2 Base sections shall have reinforced flat bottoms. The flat bottoms shall be a minimum of 8 inches in thickness.

2.2.3 Precast sections of manholes shall be adequate to withstand H-20 surface wheel loads.

2.2.4 Steps shall be Type A3076 or equal. The steps shall be a minimum of 16 inches wide and shall be in accordance with the details shown on the Contract Drawing. Steps shall be installed in vertical alignment spaced 12-inches on center unless otherwise specified, and shall be located on the vertical face of the section with very few penetrations.

2.2.5 The concrete shall have a minimum of 4000 psi compressive strength after 28 days.

2.2.6 The reinforcing steel shall be ASTM A615-Grade 60.

PART 3 - EXECUTION

3.1 Delivery, Storage and Handling

3.1.1 Precast Sections

A. All precast sections shall be stored and handled with extreme care to avoid structural damage to the units. Damage to units occurring as a result of storage or handling shall be cause for rejection.

3.2 Installation

A. Precast sections shall be installed on a level subgrade of compacted granular material as shown or directed.

B. All joints on the inside of the manhole shall be filled with mortar to provide a smooth and continuous surface.

C. Mortar beds for frames and grates shall be a maximum thickness of 1/2 inch.

D. Apply lubricant over the inside tongue and over the rubber gasket immediately prior to setting one section on top of another if rubber joints are used.

E. Seal all the openings around the pipes entering/exiting the manholes.

3.3 Final Inspection

A. The precast structures shall be visually inspected prior to final acceptance. Any defects or uncompleted work shall be corrected or finished before such acceptance will be granted.

* * * * * *

END OF SECTION

SECTION 02741

BITUMINOUS CONCRETE PAVEMENT

PART 1 GENERAL

1.1 REFERENCES

The publications listed below form a part of this specification to the extent referenced. The publications are referred to within the text by the basic designation only.

AMERICAN ASSOCIATION OF STATE HIGHWAY AND TRANSPORTATION OFFICIALS (AASHTO)

AASHTO T30	(1993) Mechanical Analysis of Extracted of Aggregate

AMERICAN SOCIETY FOR TESTING AND MATERIALS (ASTM)

ASTM D 1559	(1989) Resistance to Plastic Flow of Bituminous Mixtures Using Marshall Apparatus
ASTM D 2172	(1993) Quantitative Extraction of Bitumen from Bituminous Paving Mixtures
ASTM D 2950	(1991) Density of Bituminous Concrete in Place by Nuclear Methods

STATE HIGHWAY SPECIFICATION (SHS)

New Jesrsey Department of Transporation Standard Specifications for Road and Bridge Construction (1996)

1.2 SUBMITTALS

Submit the following in accordance with section entitled "Submittal Procedures."

1.2.1 SD-08, Statements

a. Asphalt mix delivery record
b. Asphalt concrete and material sources

1.2.1.1 Mix Delivery Record Data

Record and submit the following information to each load of mix delivered to the job site. Submit within one day after delivery on Government-furnished forms:

a. Truck No:
b. Time In:
c. Time Out:
d. Tonnage and Discharge Temperature:
e. Mix Type:
f. Location:
g. Areas Placed:

1.2.1.2 Materials

Obtain approval of the Contracting Officer for materials and material sources 2 days prior to the use of such material in the work.

1.2.2 SD-11, Factory Test Reports

a. Mix design

1.2.2.1 Mix Design

Submit results of laboratory tests performed on each mix design. Testing shall have been accomplished not more than one year prior to date of material placement.

1.2.3 SD-12, Field Test Reports

a. Asphalt concrete
b. Density
c. Thickness
d. Straightedge test

Submit reports for testing specified under paragraph entitled "Field Quality Control."

1.2.4 SD-13, Certificates

a. Asphalt concrete
b. Curbs

Submit certificates, signed by the producer, that paving materials and incidental construction items conform to specification requirements.

1.3 QUALITY ASSURANCE

1.3.1 Regulatory Requirements

Provide work and materials in accordance with applicable requirements of SHS. Paragraphs in SHS entitled "Method of Measurement" and "Basis of Payment"shall not apply.

1.3.2 Modification of References

Where term "Engineer" is used in SHS it shall be construed to mean Contractor's Quality Control representative. Where term "state" is used, it shall mean "Federal Government".

PART 2 PRODUCTS

2.1 ASPHALT CONCRETE

Provide asphalt concrete in accordance with the applicable requirements of the SHS, except where specified otherwise.

2.2 SUBBASE

SHS materials for construction of the subbase shall be in accordance with Section 901.08, Dense Graded Aggregate.

2.3 BASE COURSE

SHS materials for construction of the base course shall be I-2 Mix in accordance with Section 903.

2.4 SURFACE COURSE

SHS materials for construction of the surface course shall be Mix I-5 in accordance with Section 903.

2.5 STRIPING

SHS , materials for paint striping shall be in accordance with Section 912.

2.6 CURBS

SHS, materials for construction of asphalt curbs shall be Mix I-5 in accordance with Section 903.

PART 3 EXECUTION

3.1 PREPARATION

3.1.1 Excavation and Filling

Excavation and filling to establish elevation of subgrade is specified in Section 02301, "Earthwork for Structures and Pavements."

3.2 CONSTRUCTION

Provide construction in accordance with the applicable requirements of the SHS, except where indicated or specified otherwise.

3.2.1 Subgrade

SHS, preparation of subgrade shall be in accordance with Section 02301, "Earthwork for Structures and Pavements."

3.2.2 Subbase

SHS methods of construction of the subbase shall be in accordance with Section 300.

3.2.3 Base Course

SHS methods of construction of the base course shall be in accordance with Section 305.

3.2.4 Surface Course

SHS methods of construction of the surface course shall be in accordance with Section 404. Placement will not be permitted unless the Contractor has a working asphalt thermometer on site.

3.2.5 Striping

SHS provide paint striping in accordance with Section 618. Allow bituminous pavement to cure for at least 21 days before paint is applied. Pavement shall be thoroughly clean and entirely free of loose sand, stones, dust, oil, grease, water, and other substances that will be deleterious to the paint or will adversely affect the adhesion of the paint. Do not apply paint during high wind over 15 miles per hour or high humidity over 70 percent. Apply paint only when ambient temperature is 40 degrees F or above and rising but not more than 95 degrees F. Dimensions and arrangement of striping shall be as indicated. Apply paint to a wet film thickness of 0.015 inch by means of conventional traffic line striping equipment. Traffic shall not be permitted to use the painted areas for a minimum of 30 minutes after painting of lines has been completed.

3.2.6 Curbs

SHS methods of construction of asphalt curbs shall be in accordance with Section 606.

3.3 FIELD QUALITY CONTROL

3.3.1 Testing

3.3.1.1 Bituminous Mix Testing

Take two samples per day per mix type at plant or from truck. Test uncompacted mix for extraction in accordance with ASTM D 2172 and sieve analysis in accordance with AASHTO T30. Test samples for stability and flow in accordance with ASTM D 1559. When two consecutive tests fail to meet requirements of specifications, cease placement operations and test a new trial batch prior to resumption of placement operations.

3.3.1.2 Testing of Pavement Course

a. Density: Determine density of pavement by in-place testing using Nuclear Method in accordance with ASTM D 2950.

b. Thickness: Determine thickness of finished pavement by use of following equation:

$$t = \frac{W}{0.75d}$$

Where t= pavement thickness, in inches.
W= average weight per square yard of mixture actually used in work.
d= compacted density as measured by nuclear density device.

c. Straightedge Test: Test compacted surface of binder course and wearing course with a straightedge as work progresses. Apply straightedge parallel with and at right angles to center line after final rolling. Variations in the binder course surface shall not be more than 1/2 inches lower edge of the 10 foot straightedge; variations in wearing course surface shall not be more than 1/4 from the lower edge of the 10 foot straightedge. Pavement showing irregularities greater than that specified shall be corrected as directed by Contracting Officer.

* * * * * *

End of Section

FLUID CONTROLS INCORPORATED

WORLD LEADERS IN PLASTIC PIPING & FABRICATION

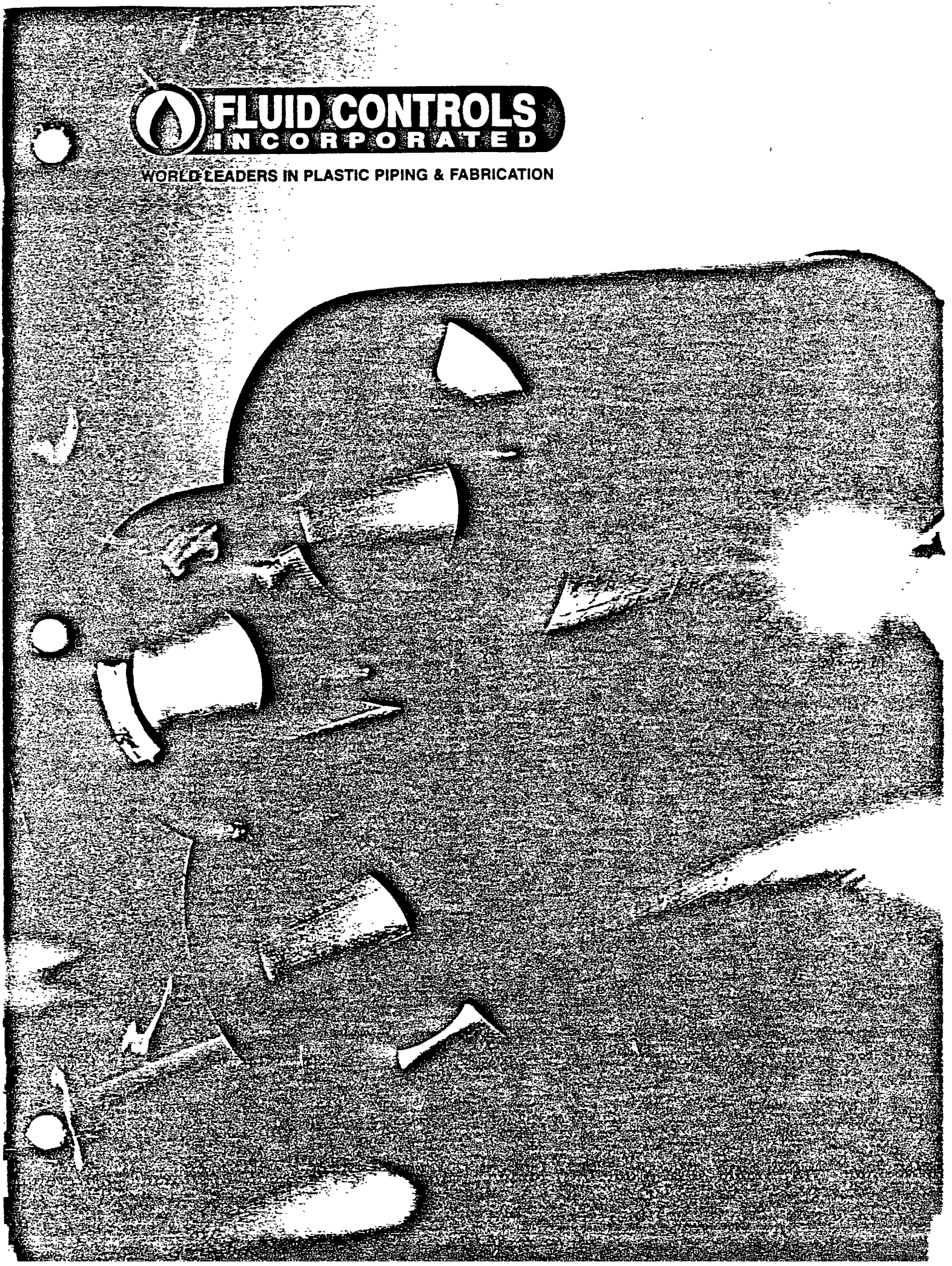

FLUID-LOK™ CATALOG

TABLE OF CONTENTS

1. Fluid-Lok™ Introductory Brochure and Case Histories

2. Fluid Controls, Inc. Products and Capabilities

3. Fluid-Lok™ Design Manual and Sample Specifications

4. Typical Detail Drawings

5. Trace-Tek™ Leak Detection Introductory Brochure, Design Guide, and Related Literature

6. Thermoplastic Valves

7. Basic HDPE Chemical Resistance Chart

8. Equipment

9. Application Notes

10. Containment Lining Systems - Atlas Bekaplast Thermoplastic Liners

FLUID-LOK™ SETS THE STANDARD FOR DUAL CONTAINMENT PIPING PRODUCTS WITH DESIGN, INSTALLATION, AND TECHNICAL ASSISTANCE BY FLUID CONTROLS, INC.

The success of a Fluid-Lok™ system is based on proper design and installation of FCI's termination fittings, ells, tees, wyes, clean-outs, sumps, manholes, floor drains, tanks and other components.

FLUID-LOK™ SYSTEM

Based on sound design and engineering principles, the Fluid-Lok™ dual containment piping system by Fluid Controls, Inc. sets the standard for environmental protection and safety in a wide variety of applications. Highest quality materials and proven design concepts ensure control, containment, and accurate leak detection of hazardous fluids.

A Fluid-Lok™ system of high density polyethylene or other thermoplastic pipe meets the most stringent standards for piping hazardous fluids. It addresses environmental liability and meets state and federal regulations with cost effective installation and maintenance.

The Fluid-Lok™ piping system is based on FCI's years of experience with high density polyethylene and other thermoplastic pipe. Beginning as a pipe distributor, today FCI provides design, engineering, manufacturing, prefabrication, installation assistance and equipment, and repair service.

Fluid-Lok™ dual containment systems are the standard for many chemical plants, paper mills, refineries, electronic manufacturers, landfills, nuclear laboratories, and other plants. All Fluid-Lok™ designs meet the current and anticipated requirements of the Resource Conservation and Recovery Act and other government regulations.

FORCE TRANSFER COUPLING

A one-piece Force Transfer Coupling (FTC), developed and patented by FCI technicians, "manages" the thermal expansion differential of the inner carrier pipe and the outer containment pipe in a dual-contained piping system. The FTC is an anchor for the inner and outer pipe when mounted on pipe rack and, additionally, a water stop when cast in concrete.

CENTRALIZERS

Centralizers in the annular space between the inner and outer pipes control the deflection, give required pipe support, and ensure stability in each pipe section.

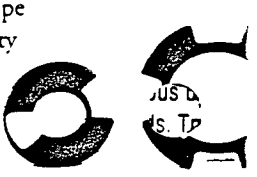

SIMULTANEOUS FUSION JOINING

Because the relative movements of the inner and outer pipe are controlled by the FTC's, troublesome expansion seals, field wraps, and questionable joining procedures are eliminated. All joints are welded with simultaneous butt fusion using only proven thermoplastic fusion techniques.

Pressure testing up to 1.5 times the design operating pressure of the inner carrier pipe ensures reliability. Simultaneous welding of both pipes reduces installation time and cost.

FEATURI

A DUAL CON

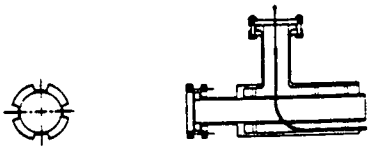

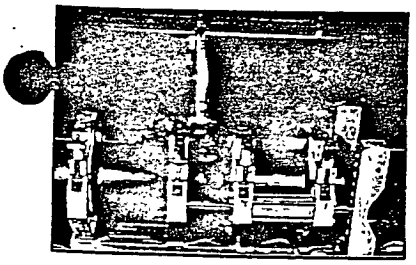

Simultaneous butt-fusion welding of the carrier and containment pipes is the preferred method of joining high density polyethylene. From top photo, place the pipe in the fusion machine carriage and check for stability of the carrier pipe, face the end of both sections, check the alignment, melt the end of the sections, and press together until cooled

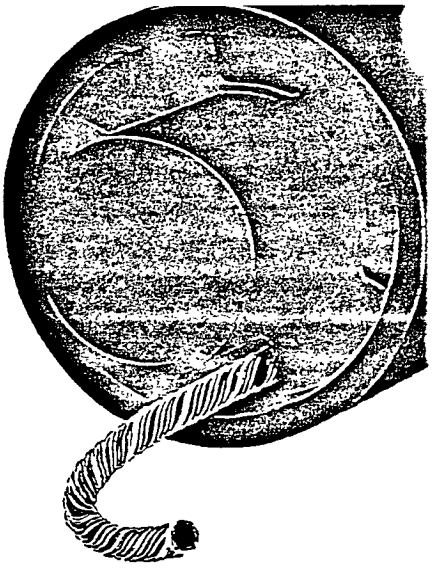

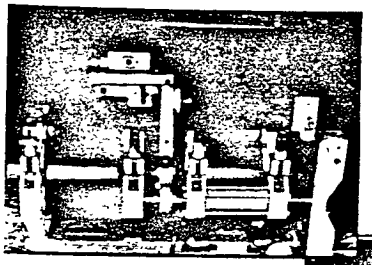

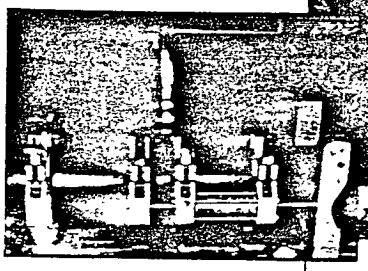

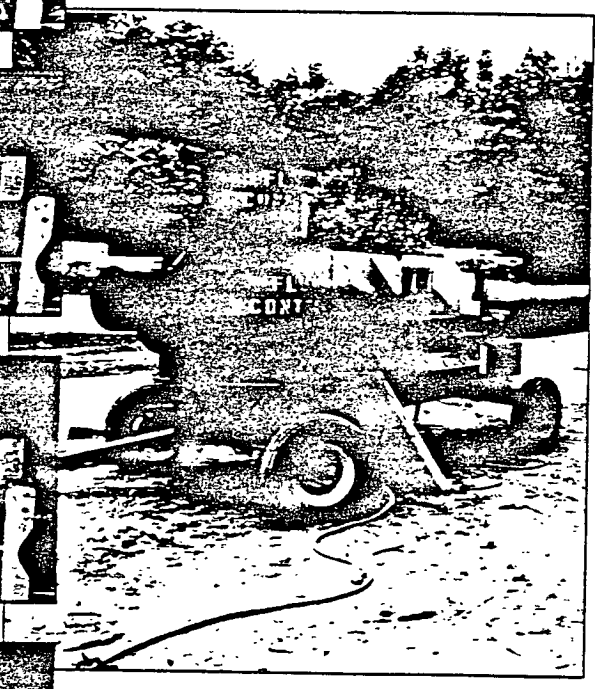

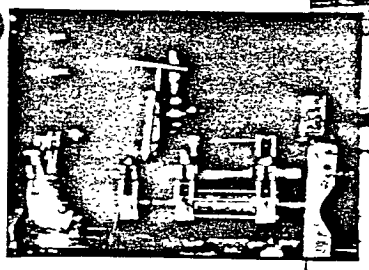

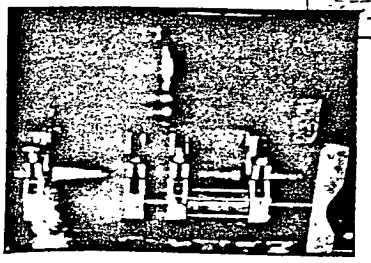

QUALITY MATERIALS

High density polyethylene (HDPE) pipe is the material of choice for Fluid-Lok™ piping for all but the most aggressive fluids. HDPE will not rust, rot, pit or corrode over the 50-year design life of an underground dual-containment system.

Highly ductile polyethylene absorbs the stress of installation and service. It will not corrode like copper and steel. It does not split or crack like PVC and fiberglass.

FLUID-LOK™ FITTINGS

A complete systems approach eliminates most of the traditional dual-containment problems with floor drains, terminations, pipe-size reductions, water stops, and end closures.

The success of a Fluid-Lok™ system is based on proper design and installation of FCI's termination fittings, ells, tees, wyes, clean-outs, sumps, manholes, floor drains, tanks, and other components. All are available from FCI as part of the Fluid-Lok™ system. For especially difficult applications, FCI technicians can custom design and machine unique HDPE fittings and spools.

G OUR FLUID-LOK™ PIPING

AINMENT PIPING SYSTEM

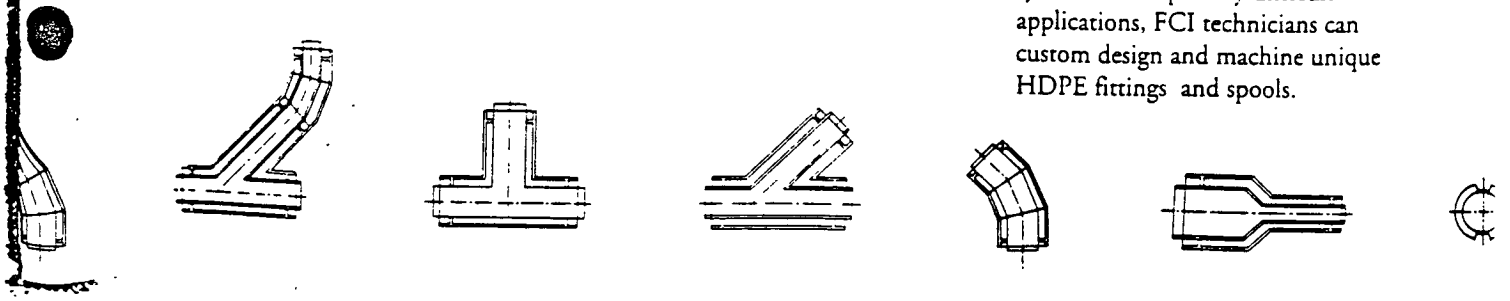

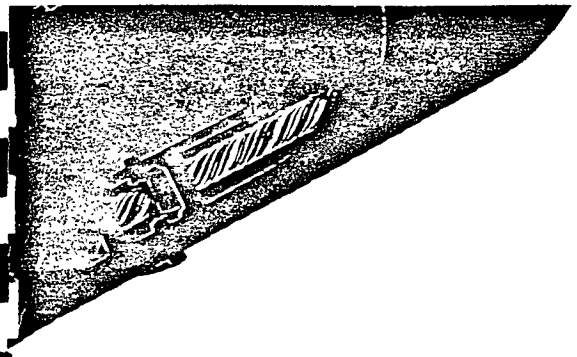

LEAK DETECTION

A Fluid-Lok™ piping system recognizes that "dual containment is leak detection." Without leak-detection capability, the outer pipe is only secondary containment that may be carrying the same fluid as the inner pipe.

When 40-foot lengths of carrier and containment pipes are joined at the FCI manufacturing plant, pull-ropes for the installation of fluid sensing cables can be installed between the inner and outer pipes. A complete Fluid-Lok™ system will *rapidly* pinpoint the source of a leak.

DESIGN ASSISTANCE

Just call and ask, "How?" Designers at FCI can provide all the necessary design drawings. FCI designers will work with plant or consulting engineers, from concept to installation, to ensure the development of a trouble-free Fluid-Lok™ system.

COST REDUCTION

Prefabrication of complex piping projects in the FCI shop will enhance quality, reduce the installation cost, and minimize on-site construction disruption. Installation time can be cut from months to weeks. Overall project cost can be reduced significantly.

Sections of pipe, joints, and fittings up to 40 feet in length can be assembled and shipped as one component.

FLUID-LOK™ DUAL CONTAINMENT PIPE SIZES

Sizes listed are HDPE sizes. Other materials, sizes and PSI ratings are available.**

SIZE	CARRIER		CONTAINMENT		SPACE LEAK-DET CABLE*	MATERIALS AVAILABLE**
	OD	PSI	OD	PSI		
1" X 3"	1.315	160	3.5	160	NO	HDPE, PP, PVDF
1" X 4"	1.315	160	4.5	100	YES	HDPE, PP, PVDF
1.5" X 4"	1.9	160	4.5	100	NO	HDPE, PP, PVDF
2" X 4"	2.375	160	4.5	100	NO	HDPE, PP, PVDF
2" X 6"	2.375	160	6.625	100	YES	HDPE, PP, PVDF
3" X 6"	3.5	160	6.625	100	NO	HDPE, PP, PVDF
3" X 6"	3.5	100	6.625	64	YES	HDPE, PP, PVDF
3" X 8"	3.5	100	8.625	160	YES	HDPE, PP, PVDF
4" X 8"	4.5	160	8.625	100	YES	HDPE, PP, PVDF
4" X 8"	4.5	100	8.625	64	YES	HDPE, PP, PVDF
6" X 10"	6.625	160	10.75	100	YES	HDPE, PP, PVDF
6" X 10"	6.625	100	10.75	64	YES	HDPE, PP, PVDF
6" X 10"	6.625	64	10.75	64	YES	HDPE, PP, PVDF
8" X 12"	8.625	100	12.75	64	YES	HDPE, PP, PVDF
8" X 12"	8.625	64	12.75	51	YES	HDPE
10" X 14"	10.75	100	14.00	64	NO	HDPE
10" X 16"	10.75	100	16.00	64	YES	HDPE
10" X 16"	10.75	64	16.00	64	YES	HDPE
12" X 16"	12.75	64	16.00	64	NO	HDPE
12" X 18"	12.75	64	18.00	64	YES	HDPE
14" X 20"	14.00	64	20.00	51	YES	HDPE
16" X 22"	16.00	64	22.00	51	YES	HDPE
18" X 24"	18.00	64	24.00	51	YES	HDPE
20" X 28"	20.00	51	28.00	51	YES	HDPE
22" X 30"	22.00	51	30.00	51	YES	HDPE
24" X 32"	24.00	51	32.00	51	YES	HDPE

* Leak detection cables require 3/4-inch of annular space between carrier and containment. Plus allowance for internal beads.

** Polypropylene and PVDF are available in metric sizes. Sizes shown are nominal inch sizes.

Please contact our technical staff for additional information.

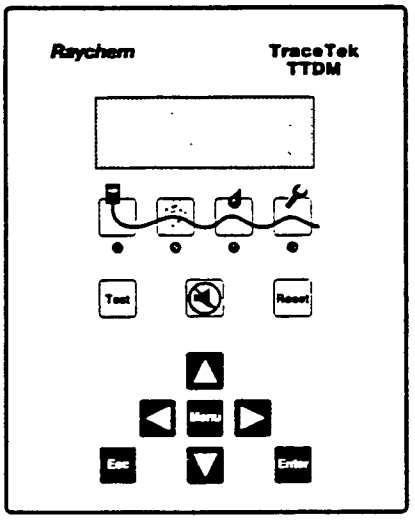

TRACETEK LEAK DETECTION SYSTEMS FOR

FLUID-LOK™ DUAL CONTAINMENT PIPING SYSTEMS

New TTDM Alarm and Locator Module

- Quick Detection of Leaks
- Reliable
- Easy Operation & Maintenance
- Precise Location of Leaks
- Cost-Effective Performance

Installed in Fluid-Lok™ dual containment pipes, sumps, and tanks, TraceTek sensing cable pinpoints leaks + or - 1 foot of where the leak is located. The following fluids can be detected with the TT3000: aqueous fluids (water present), such as bases, acids, industrial wastes, leachates and contaminated groundwater. The following fluids can be detected with the TT5000 series: hydrocarbon solvents, fuels and oils. TraceTek Systems can be designed to include both detection capabilities and can tell if a leak is from a leaking fuel pipe or intruding groundwater in dual contained fuel piping or tanks.

When liquid is detected, the TTDM unit sounds an alarm and displays the location of the leak. The unit then continues to monitor and will re-alarm if there are any major changes.

Additional features consist of: the TTDM unit warns of fault conditions and indicates when service is required, an events history log allows leaks to be tracked, the settings can be customized to suite the user's application, both the events history log and any user settings are held in nonvolatile memory and the unit has built-in system-wide diagnostic functions. The TraceTek System includes a graphic map showing where the sensing cable is installed.

In addition to the new TTDM unit, TraceTek offers cost-effective nonlocating single-channel systems for small low point leak detection installations.

When there is no time to lose, the TTDM unit provides reliable protection for the environment.

TT3000 Sensing Cable for Conductive Liquids

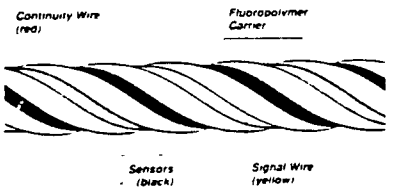

TT5000 Fuel-Sensing Cable & TT5001 Solvent-Sensing Cabl

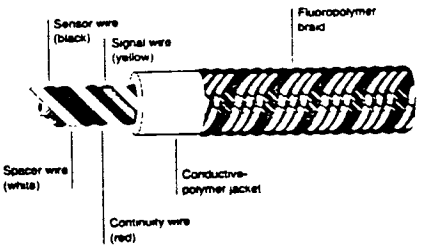

FLUID CONTROLS INCORPORATED
WORLD LEADERS IN PLASTIC PIPING & FABRICATION
3435 Stanwood Blvd. NE • Huntsville, AL 35811
1-800-462-0860

FORCE TRANSFER COUPLING®
from FLUID-LOK™ DUAL CONTAINMENT SYSTEMS

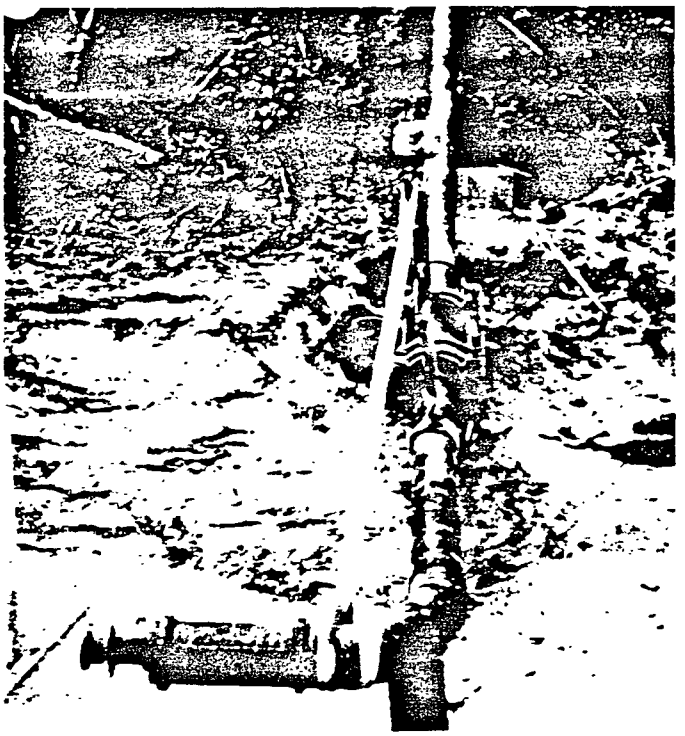

• In High Density Polyethylene (HDPE) dual containment piping systems, changes in temperature often create large forces of expansion and contraction. Proper anchoring and guidance of HDPE systems are required to give trouble free service lives. It is important to remember that in a dual containment system, the system must provide for the restraint of the inner carrier pipe.

• Fluid Controls' Inc. patented FORCE TRANSFER COUPLING® provides the restraint of the linear expansion. More importantly, the patented FORCE TRANSFER COUPLING® restrains the force of that expansion.

• This unique one piece fitting allows the forces from expansion and contraction from both the inner and outer pipe to be anchored to an external point.

• The patented FORCE TRANSFER COUPLING® is designed to withstand the sheer force from differential expansion.

• And for sealing the system.the Fluid-Lok™ End Termination is designed specifically to withstand end load forces.

'ith the patented FORCE TRANSFER COUPLING® a Fluid-Lok™ dual containment piping system can be designed to handle a wide range of temperatures. A Fluid-Lok™ system will contain our patented FORCE TRANSFER COUPLING®, Centralizers, End Terminations and other fittings designed to provide a complete, functional, and long lived Fluid-Lok™ HDPE dual containment piping system.

FLUID-LOK™
FORCE TRANSFER COUPLING

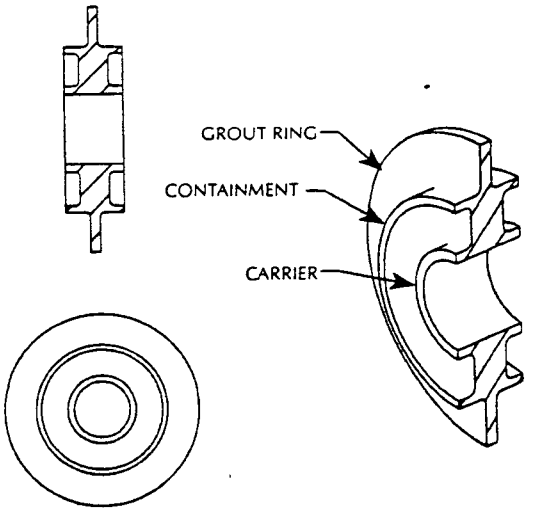

DUAL CONTAINED PIPE WALL
PENATRATION REBAR DETAIL

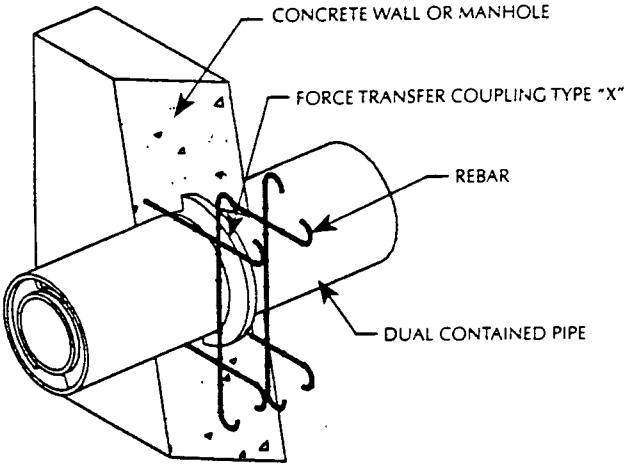

FLUID CONTROLS INCORPORATED

WORLD LEADERS IN PLASTIC PIPING & FABRICATION

For more information, contact Alan Deriax or Karen Beasley at (800) 462-0860.

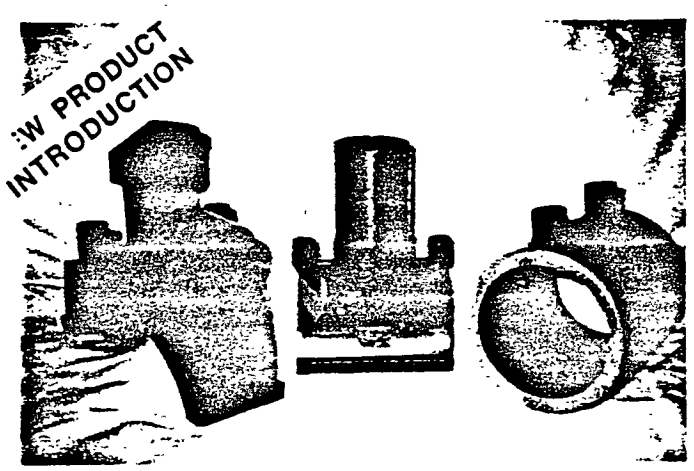

FIELD LOCATABLE CONTAINMENT ACCESS PORTS and LOW POINT DRAINS from

FLUID-LOK™ DUAL CONTAINMENT SYSTEMS

For Smaller Diameter Dual Containment Systems

- **Economical**
- **Reliable**
- **SDR 11, 160 psi Rated**
- **Up to 10" Containment**
- **Couplings Up to 12"**

Two new cost saving ideas from Fluid Controls, Inc. and Fluid-Lok™ Dual Containment Systems, the Total Installed Cost Leader. For smaller diameter HDPE containment systems (10" containment and smaller), field location of the access ports and low point drains with electrofusion fittings from Central™ Fittings and Fluid Controls, Inc. can result in substantial savings over butt-fused access port and low point drain fittings. While not always recommended for systems using locating leak detection systems, like the Trace-Tek™ system from Raychem, the electrofusion field locatable access port and low point drain installation uses reliable technology that has a proven service record.

Welding long runs of piping and then installing the required access ports and low point drains by electrofusion will save construction dollars on many Fluid-Lok™ installations. Call the containment experts at Fluid Controls, Inc.

Containment Pipe Size	Access Port Size	Low Point Drain Size
3 inch IPS	3 inch	1 inch
4 inch IPS	4 inch	2 inch
6 inch IPS	4 inch	2 inch
8 inch IPS	4 inch	2 inch
10 inch IPS	4 inch	call
Call for 10 and 12 inch Electrofusion Availability		

Note: Fluid Controls, Inc. Systems are available to 48" carrier piping. Just call and ask for our Product Manager to discuss your needs.

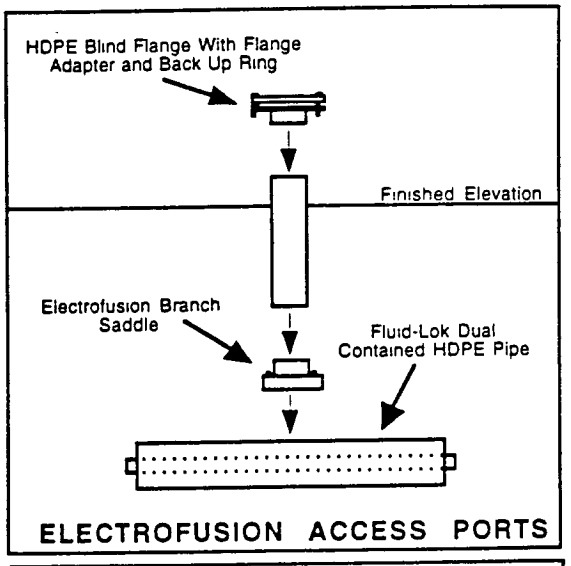

ELECTROFUSION ACCESS PORTS

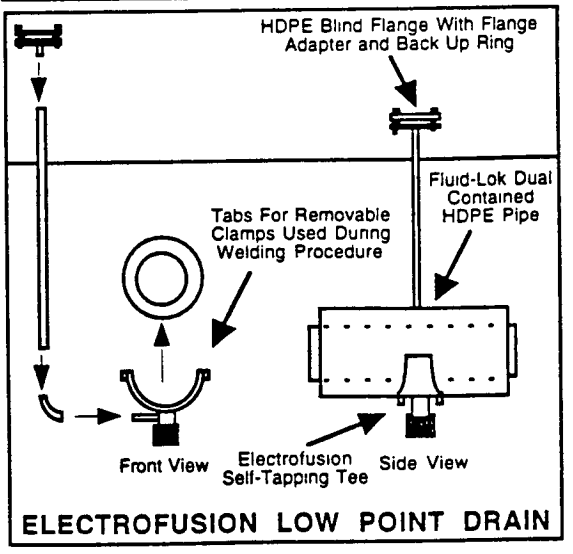

ELECTROFUSION LOW POINT DRAIN

FLUID CONTROLS INCORPORATED
3435 Stanwood Blvd. NE • Huntsville, AL 35811
1-800-462-0860

EFPS96

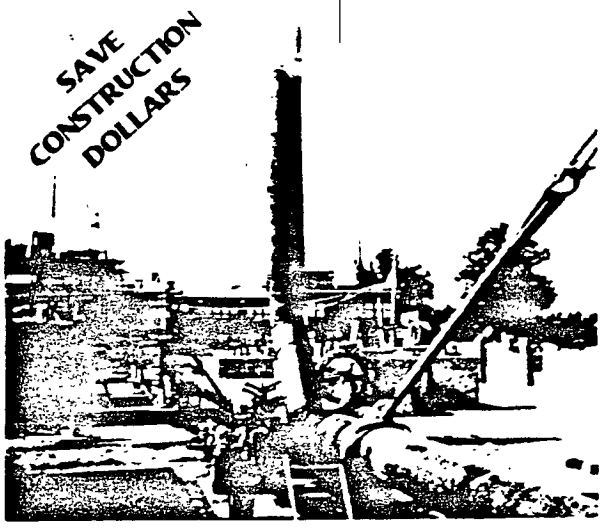

PRE-FABRICATED DUAL CONTAINMENT PIPING SPOOLS and HEADERS from

FLUID-LOK™ DUAL CONTAINMENT SYSTEMS

Industrial, Commercial and Remedial Dual Containment Systems

Lowest Total Installation Costs of Any System
Minimizes Contractor Labor and Equipment Costs
Detailed Dimensional Drawings Provided on <u>All</u> Spools
- **Leak Detection and Location Systems Available from FCI**

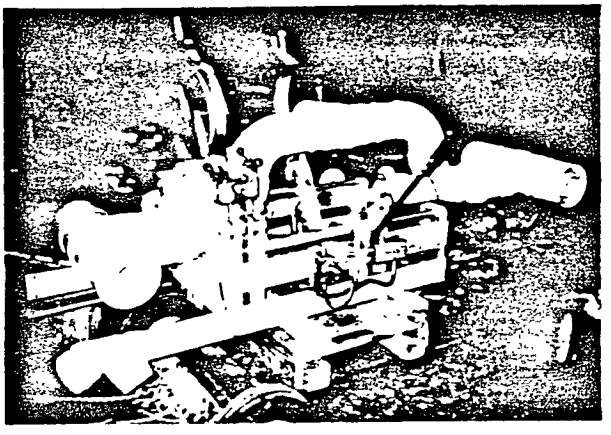

Fluid-Lok™ Dual Containment Systems, the Lowest Installed Cost Leader, can provide intricate spools of dual containment piping for fitting intensive applications. Typical applications consist of: acid waste drain lines, process waste drain lines, above ground pipe rack installations and/or other complicated dual containment systems.

Fabricated from 100% Fluid-Lok™ components, according to accurately dimensioned shop drawings that are submitted for engineering approval before material is delivered to the job-site, Fluid-Lok ™ piping spools can reduce the installation time of fitting intensive systems from weeks to days.

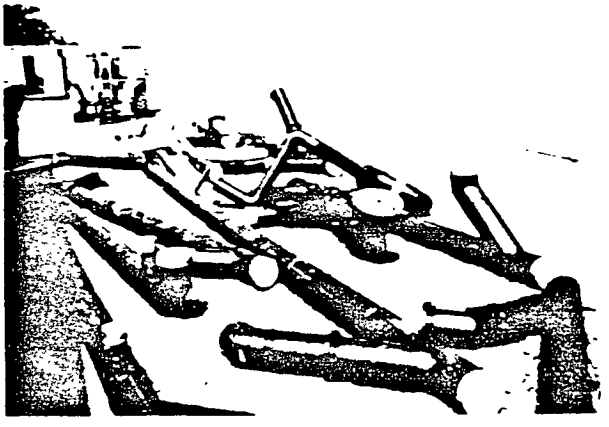

Fluid Controls, Inc. has provided many systems, from 1" to 48" carriers to industrial, remedial and military projects. If you are considering the purchase or installation of a dual containment system call the experts at Fluid Controls, Inc. at 1-800-462-0860. Ask for our Product Manager to discuss your needs. Or send us your plans for a free dual containment consultation.

SHPS96

FLUID CONTROLS INCORPORATED
3435 Stanwood Blvd. NE • Huntsville, AL 35811
1-800-462-0860

FLUID CONTROLS, INC.

BULLETIN

PLASTIC PIPING / FABRICATION SPECIALISTS

Huntsville, Alabama DUAL CONTAINMENT SUMPS / FABRICATION SPECIALISTS Vol. 5, No. 2

Polyethylene Leachate Collection Tanks by Fluid Controls Are "More Forgiving"

The installation and maintenance of underground tanks for landfill leachate collection and similar applications are fraught with potential problems under the best of conditions.

Among other requirements, tanks used in landfills must meet Federal and state environmental protection regulations for decades. Dual- containment and leak detection are necessary features.

Fluid Controls of Huntsville, Ala., helped a landfill operator meet the environmental requirements recently with the installation of a 4,500-gallon leachate collection tank. The 40-foot dual-containment tank was made of 60-inch and 54-inch diameter Permacore high-density polyethylene (HDPE) pipe.

"Polyethylene is more forgiving than many materials," said Mike Montgomery of Fluid Controls. "The low-strength ductile material will handle more differential settlement than fiberglass or concrete tanks."

The long life of the tank is ensured by its resistance to dilute carbonic acid formed by rainwater and carbon dioxide. The carbon dioxide is a by product of the garbage decomposition. Dilute carbonic acid will corrode a steel tank.

Like any horizontal tank designed for underground service, the HDPE tank must be installed properly with good compaction of the back fill around the walls.

The Fluid Controls tank features a leak detection and solids removal chamber on one end. It is accessible through a 24-inch manway. The chamber, manway, and all fittings are made of HDPE.

The tanks are manufactured in 500 to 4,500-gallon capacities (see table on back). Complete assembly, with one tank inside the other, is at the Fluid Controls plant. Each tank is assembled with butt and extrusion welding and tested with ultra-sound to ensure leak-free installation. The inside tank and containment space will pass a 3 psi pressure test.

"For your custom tank needs give me a call at 1-800-462-0860," said Tracy Temcoff of Fluid Controls. "Or fax your requirements to me at 205-852-6005."

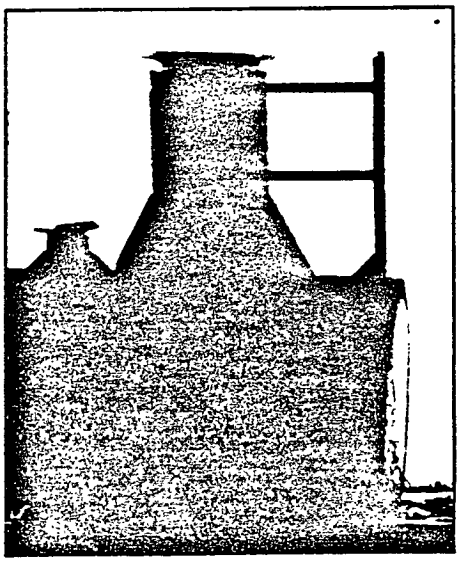

The manway and leak-detection system are necessary features for environmental monitoring.

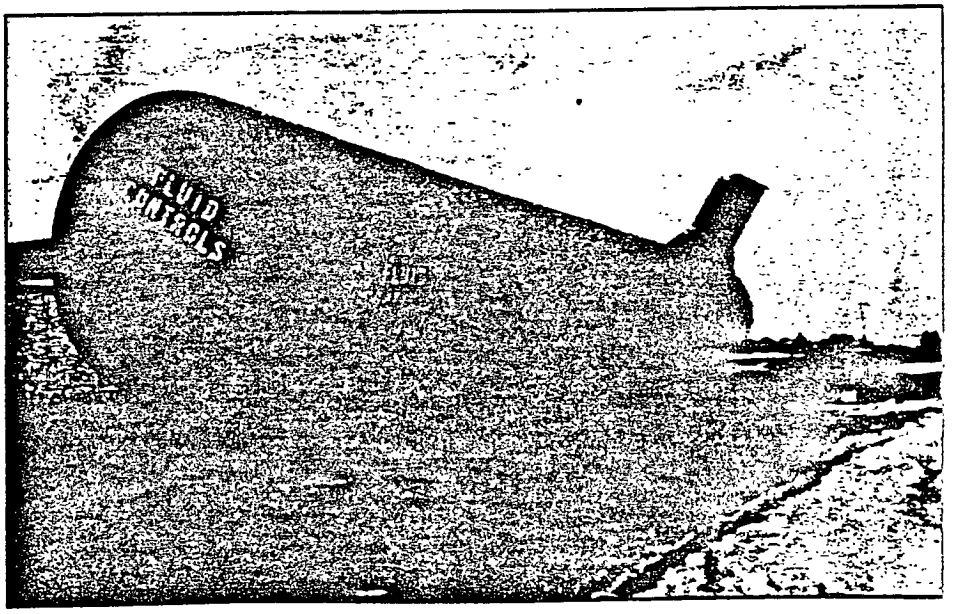

A dual-containment HDPE tank leaves the Fluid Controls plant in Huntsville.

HDPE DUAL CONTAINED LEACHATE COLLECTION TANKS

SIZE-GALLONS	DIAMETER OD	DIAMETER ID
4,500	60"	54"
4,000	60"	54"
3,000	60"	54"
2,500	60"	54"
2,000	60"	54"
1,500	60"	54"
1,000	60"	54"
500	60"	54"

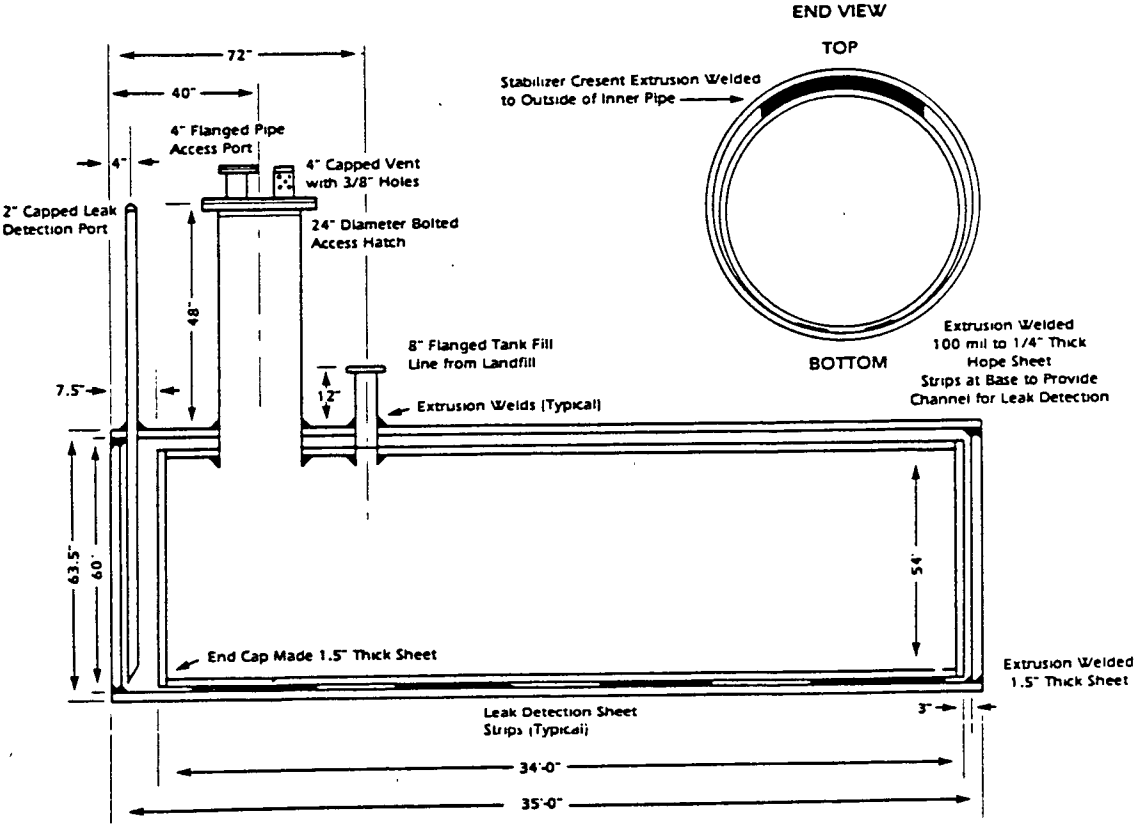

FLUID CONTROLS INCORPORATED

PLASTIC PIPING / FABRICATION SPECIALISTS

Corporate Office
3435 Stanwood Blvd., NE
Huntsville, AL 35811
(205) 851-6000 • 1-800-462-0860
FAX (205) 852-6005
Branches:
Mobile, AL • (205) 479-4800
Little Rock, Ark. • (501) 835-3232

FLUID CONTROLS, INC.

BULLETIN

WORLD LEADERS IN PLASTIC PIPING & FABRICATION

Huntsville, Alabama | DUAL CONTAINMENT PIPING SYSTEM | Vol. 6, No. 5

Fluid Controls Manufactures World's Largest Dual Contained Polyethylene Piping System

HUNTSVILLE, AL -- A 36" x 42" dual contained polyethylene piping system made recently by Fluid Controls, Inc., for a large southeastern chemical company, is the largest dual contained polyethylene pipe ever installed.

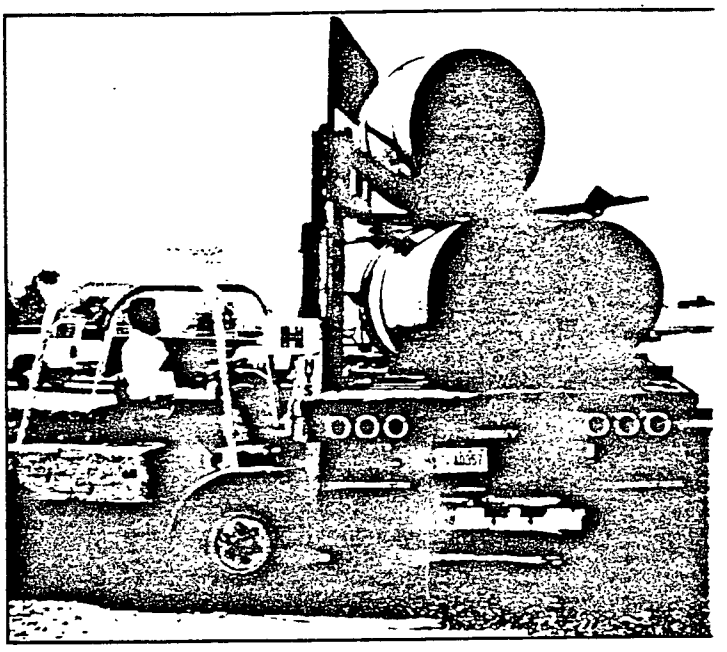

The fully engineered system, utilizing Fluid ntrols' patented FLUID-LOK™ method, is transporting process water from the plant to a holding area for treatment, according to Alan Deriax, Fluid Control's Product Manager for dual contained products. The system went into operation in late June.

Sections of the FLUID-LOK™ piping system were prefabricated in the Fluid Control's plant and transported to the job site for field welding, Deriax said.

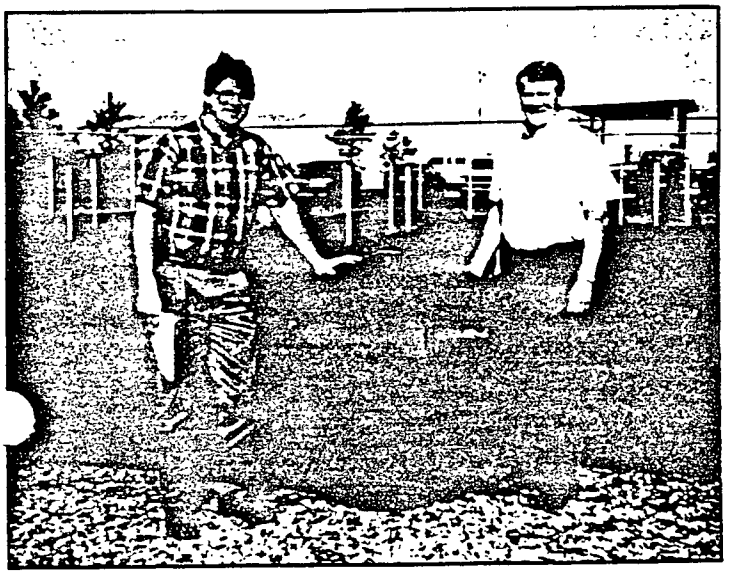

Working with The Advent Group of Brentwood, TN engineers for the job, Fluid Controls designed anc fabricated a system which takes into account al operating conditions, including temperature pressure, and external loading of the undergrounc pipe. Low-point drains were included for leak detection.

W. L. Hailey and Co. of Nashville, TN was the prime contractor for the project.

The anticipated service life of the system is 50 years according to Ken Shields, Account Manager for the project.

"The customer made the decision that it was environmentally responsible to use dual containment for this application," said Fluid Controls President Dudley Burwell. "We were selected for the job based on our quote price and prior experience with large dual contained polyethylene piping systems for Fortune 500 companies, as well as many smaller customers."

Fluid Controls also designed, fabricated, and installed a 16" x 24" FLUID-LOK™ dual contained polyethylene piping system at the processing facility as part of the same contract, Burwell said.

The FLUID-LOK™ system is a patented system designed to handle a wide range of temperatures using a one-piece Force Transfer Coupling. Developed by Fluid Controls, the Force Transfer Coupling "manages" the thermal expansion differential of the inner carrier pipe and the outer containment pipe in a dual contained polyethylene system. It acts as an anchor for the inner and outer pipe when mounted in a pipe rack or as a water stop when cast in concrete.

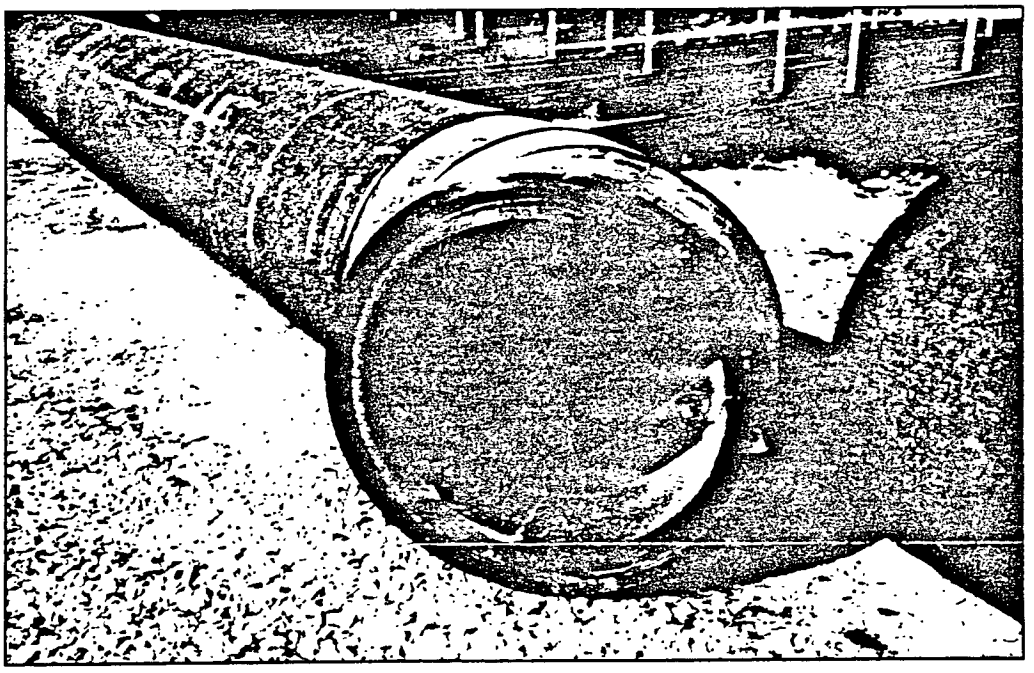

FLUID CONTROLS INCORPORATED

WORLD LEADERS IN PLASTIC PIPING & FABRICATION

Corporate Office 3435 Stanwood Blvd. NE • Huntsville, AL 35811
(205) 851-6000 • 1-800-462-0860 • FAX (205) 852-6005
Branches Mobile, AL • (334) 479-4800 • Memphis, TN • (901) 348-842

FLUID CONTROLS, INC.

BULLETIN

WORLD LEADERS IN PLASTIC PIPING & FABRICATION

Huntsville, Alabama DUAL CONTAINMENT PIPING & STRUCTURES Vol. 6, No. 6

No. 1 Superfund Site Uses Fluid-Lok™ Dual Containment Piping System

In the late 50's and early 60's several manufacturing companies for a mid-atlantic state were looking for a site to dispose of wastes left over from their manufacturing processes. These companies made an effort to find the best available site for their wastes. One company went so far as to request from the state a suggested landfill location for this disposal problem. The site that was used was Lapari Landfill, at the time, an "approved" location.

Over the years this landfill site was closed. Houses were built. Next to a small lake adjacent to the landfill site, a small park was built. Soon population pressures in this part of the country turned the area into a middle class residential suburb. The manufacturing wastes in the closed landfill (not "closed" by today's standards) eventually made a Superfund clean-up necessary.

Leachates and runoff from the old landfill site contaminated the slope downstream to the adjacent lake and surrounding soils. The landfill itself was remediated and closed in 1989 according to EPA guidelines. The offsite contamination eventually lead to the Lapari Landfill Offsite Remedial Action Project becoming the number one site on the EPA's NPL (national priorities list) at the start of 1994.

The contaminants from the old landfill had polluted the lake bottom sediments, the soils around and in the small stream that fed the lake, and the soils in a wetlands area exposed to overflow and runoff. The scope of this clean-up was larger than the remedy of the actual landfill. The stream had to be diverted, so the lake and the marsh could be drained. Once the lake and marsh are drained, the soil has to be removed to a holding impound area pending thermal treatment. Then the entire area is to be rehabilitated into an "idyllic" suburban park setting.

Dames and Moore, Inc., a national engineering firm with a wide field of experience in environmental remediation and clean-up, was awarded the task of designing this multi-phase project. After an initial evaluation was complete, Dames and Moore determined that several dual contained piping systems and structures would be required for this design. At this point Dames and Moore called Fluid Controls, Inc., a recognized leader in dual containment systems and structures with the patented Fluid-Lok™ systems for environmental containment.

FCI provided detailed design assistance for their patented HDPE Fluid-Lok™ dual containment piping system. FCI's goal: to acheive the most cost effective systems and installations for their client. Fluid Controls was there throughout the entire design phase, working closely with mechanical/civil engineers on the piping system requirements and with the electrical engineers to meet leak detection needs. FCI's team of experts knew that the marriage of the two aspects of any true dual containment system, secondary containment and leak detection, critical consideration for the ease of installation and confidence in use of these types of systems.

Sevenson Environmental Construction (Love Canal clean-up fame) won the bidding. FCI was there even before the bid date, working closely with Sevenson to insure accurate take-offs and pricing. The extremely competitive nature of the environmental clean-up market makes it critical that contractors have good accurate quotes on materials and their associated costs of installation. There is no room for "fudge factors" on these projects!

After the bid, Sevenson again came to FCI for help with a "VE" or value-added-engineering proposal for the HDPE manholes and other aspects of the project. This "partnership" was again successful with all VE proposals being approved per contractor requests. FCI provided data critical to several aspects of the VE.

During construction FCI provided Thermoplastic Fusion equipment for welding the HDPE components in the field, using the Fluid-Lok™ Simultaneous Fusion Procedure. This simple procedure combined with Fluid-Lok™ dual containment system components allows the contractor to confidently weld both the inner carrier pipe and the outer containment pipe in one step. FCI aslo provided trained technicians on site to assist the contractor with QA/QC and with training his own people to weld and handle these materials. FCI also provided detailed installation and operation information for the leak detection system supplied to the site.

"Fluid Controls, Inc. came through when we needed them," said Rick Rizzo, project manager for Sevenson, "FCI's products and people were professional and the services provided exceeded our expectations for a piping supplier. We will use Fluid Controls and Fluid-Lok™ again."

When all was said and done, FCI had provided $400,000 dollars worth of HDPE containment structures and Fluid-Lok™ piping systems for this site. Our on-site applications included: hazardous material force mains to transport contaminated fluids to the treatment plant on-site, gravity piping systems for leachate transport from the contaminiated soil impoundment area, a dual containment pipe system including 6 HDPE grate inlet manhole structures for runoff from the thermal treatment containment area, and a wide variety of other HDPE structures and manholes.

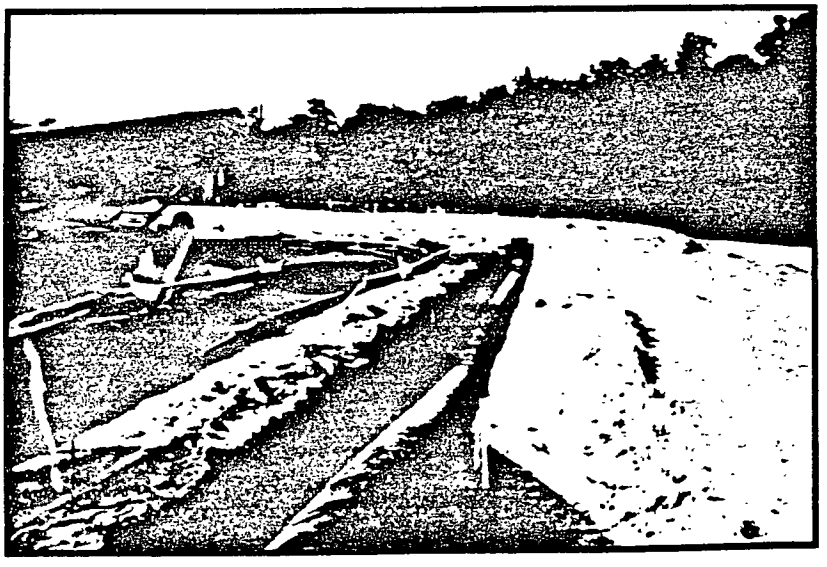

FLUID CONTROLS INCORPORATED

WORLD LEADERS IN PLASTIC PIPING & FABRICATION

Corporate Office, 3435 Stanwood Blvd. NE • Huntsville, AL 35811
(205) 851-6000 • 1-800-462-0860 • FAX (205) 852-6005
Branches. Mobile, AL • (205) 479-4800 • Fayetteville, AK • (501) 443-4585

YOUR PLASTIC PIPING/FABRICATION SPECIALIST

FLUID-LOK DUAL CONTAINMENT PIPING SYSTEMS

FLUID-LOK Dual Contained Piping Systems. HDPE Manholes, Sumps, and Valve Boxes, Perforated Pipe for Leachate Collection.

APPLICATION SPECIFIC PLASTICS 66

Phillips Driscopipe, Inc.

High Density Polyethylene Pipe and Fittings In Sizes From 3/4" to 54"

Raychem TraceTek

Leak Detection Systems for Dual Contained Pipe and Tanks

Raychem

Ultratec Division

Ultrafuse* UF-C

Ultrafuse Couplers for Polyethylene Pipe

Rental Equipment

Butt Fusion Machines from 3/4" to 58"
Socket Fusion Machines from 1/2" to 4"
Fuseal Electrofusion 1" to 12" - (Polypro)
Central Electrofusion 2" to 12" - HDPE
Raychem Ultrafuse 4" to 60"
Special Equipment & Accessories

CHRISTIE MANUFACTURING INC.

Butt Fusion Equipment Sales

GEORGE FISCHER +GF+

PVDF and Polypro Pipe, Valves and Fittings

R&G SLOANE

FUSEAL II

Corrosive Waste Piping System

ASAHI/AMERICA

Thermoplastic Butterfly Valves

Plastic Tanks

50 to 22,000 gallons

atlas

BEKAPLAST®
CORROSION-RESISTANT
LINING SYSTEMS

For Primary and Secondary Containment

Distributed by:

FLUID CONTROLS INCORPORATED

PLASTIC PIPING / FABRICATION SPECIALIST

Corporate Office
435 Stanwood Blvd., NE
Huntsville, AL 35811
(205) 851-6000
FAX (205) 852-6005
(800) 462-0860

Baton Rouge, LA
10985 N. Harrells Ferry Rd.
Suite 200
Baton Rouge, LA 70816
(504) 275-4422
FAX (504) 275-4425

Mobile, AL
P. O. Box 9081
Mobile, AL 36691
(205) 479-4800
FAX (205) 479-5900

Fayetteville, AR
3024-C Market Ave.
Suite 3
Fayetteville, AR 72703
(501) 443-4585

Jackson, MS
(601) 355-6800
FAX (601) 355-687

PRODUCT BULLETIN

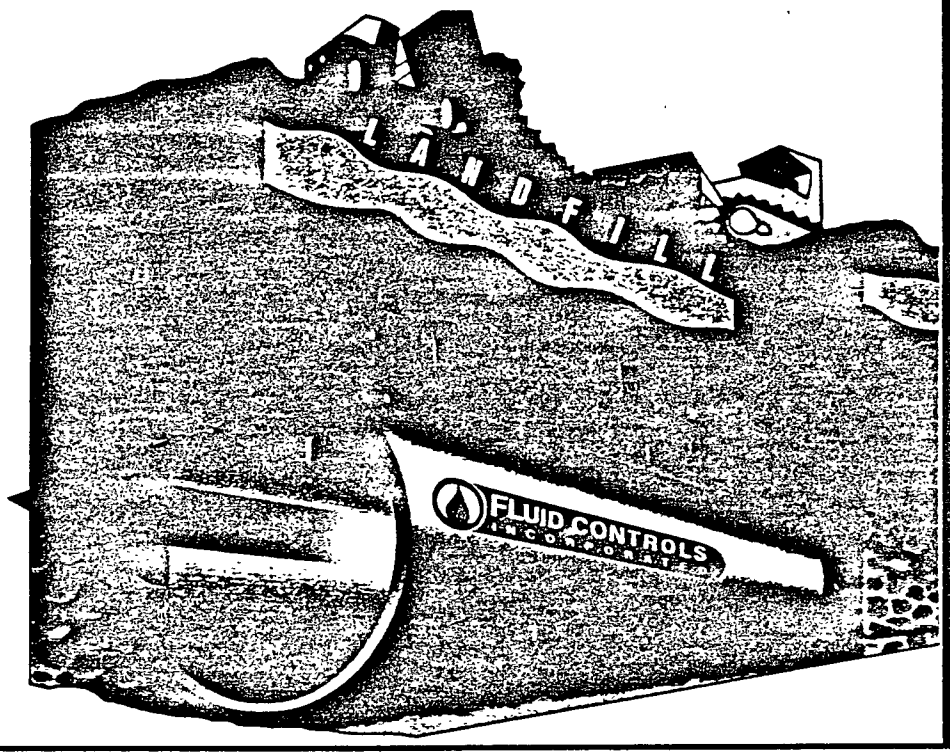

THE SMART LANDFILL SOLUTION

PERFORATED PIPE FROM THE INDUSTRY LEADER - FLUID CONTROLS, INC.

Fluid Controls, Inc. - the industry leader in the smart landfill solutions - Perforated Pipe gives the end user and the designer the flexibility to customize specifications needed for landfill management.

Fluid Controls Perforated Pipe is the most effective method of removing liquids from landfills, in heap leachate mining and from around buildings. The French drain design collects the leachate, and as the leachate fills the trench, it is carried off in the perforated pipe.

Fluid Controls Perforated Pipe is surrounded by washed crushed stone in the French drain. The holes in the Fluid Controls Perforated Pipe are smaller than the washed stone around the pipe, thus prohibiting fines from washing into the pipe and blocking the drainage. Fluid Controls Perforated Pipe can be supplied with or without a geotextile sock. The thickness of pipewall is determined by the depth at which it is buried. Various wall thicknesses and hole patterns are available.

Fluid Controls Polyethylene Perforated Pipe meets ASTM 3350-84, the standard specification for polyethylene plastic pipe and fittings materials with a cell classification of 345434 C and the environmental stress crack resistance according to ASTM D 1623, condition C, which shall be greater than 5,000 hours. Dimensions conform to ASTM F714 and are rated PE 3408 by the Plastic Pipe Institute.

Fluid Controls Polyethylene Perforated Pipe is joined by butt fusion, using the latest standards in equipment and procedures. Fluid Controls can provide butt fusion machines for rental and trained technicians per specific request.

In many applications, SDR 17 offers the best properties for a wide range of applications. The 120 degree hole pattern is most common in landfills. The four hole 90 degree pattern is frequently used in gas gathering wells. The 3/8" hole size is most appropriate in variety of applications.

FLUID CONTROLS INCORPORATED

WORLD LEADERS IN PLASTIC PIPING & FABRICATION

3435 Stanwood Blvd., NE • Huntsville, Alabama 35811 • (205) 851-6000 • 1-800-462-0860 • FAX (205) 852-6005

FLUID CONTROLS INCORPORATED

WORLD LEADERS IN PLASTIC PIPING & FABRICATION

Polyethylene Manholes for Corrosive Applications

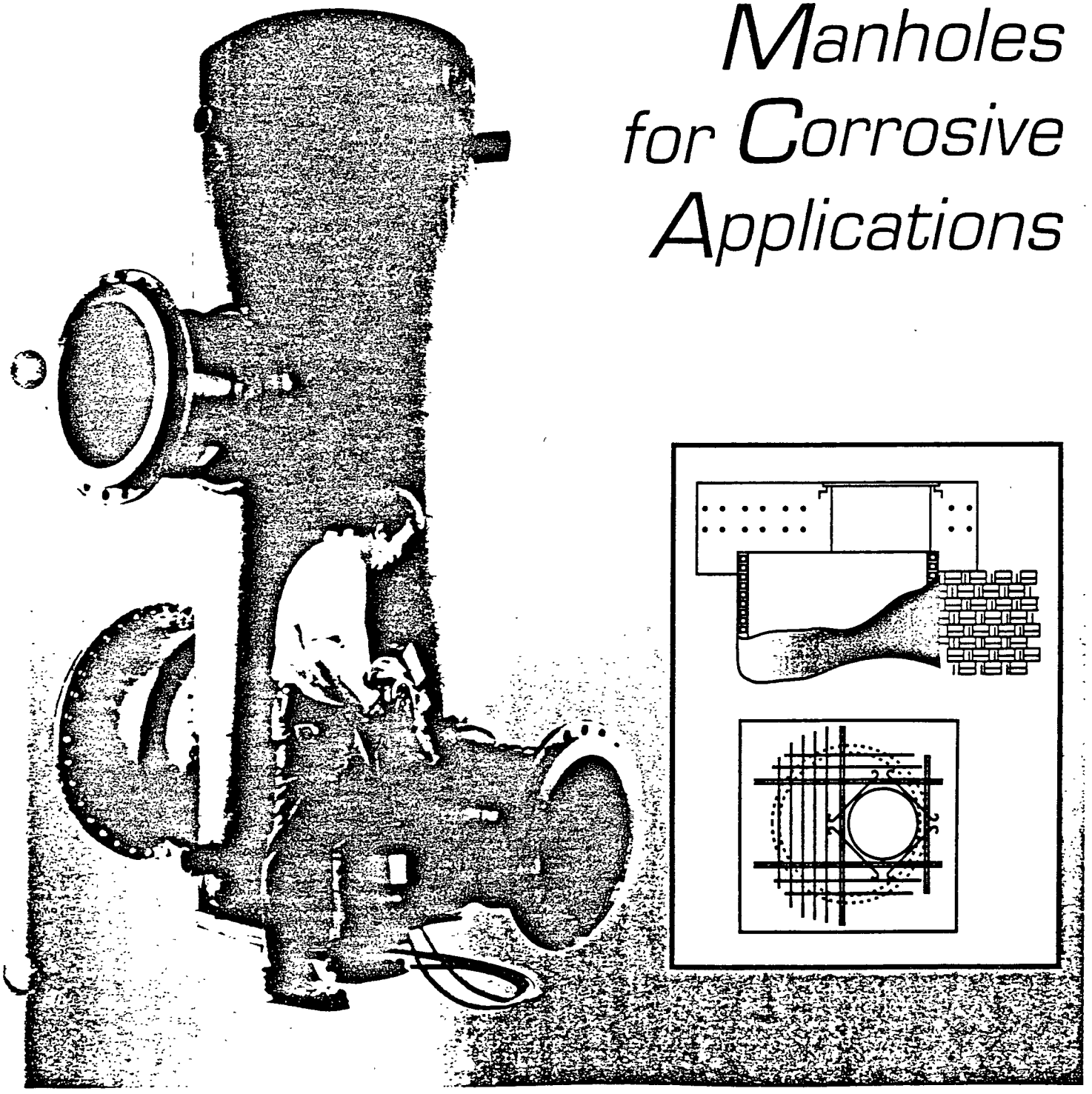

Fluid Controls produces polyethylene manholes, the most trouble-free manholes for corrosive sewers.

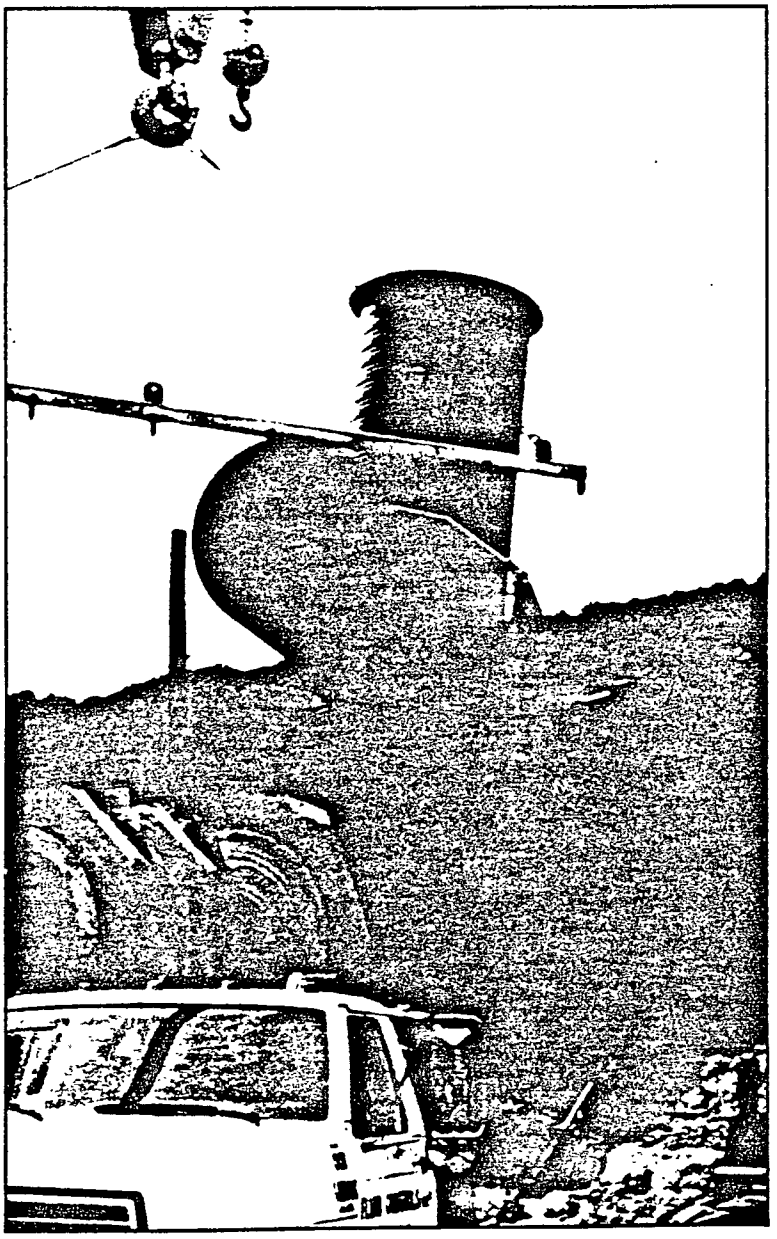

- Tough, impact-resistant
- Lightweight, easy to install
- Chemically resistant, no corrosion
- Excellent flow, nonporous surface, no buildup
- Sizes from 36 to 60 inches
- Variety of tops and configurations

The smooth, nonporous surface of polyethylene discourages the formation of algae and other common growths. This allows for excellent flow and assures that the hydraulics remain constant over the life of the system.

Manholes are available in 36 inch to 60 inch diameter polyethylene. Phillips Driscopipe® and Permacore® pipes are used to make manholes.

® Permacore and Driscopipe are registered trademarks of Phillips Driscopipe, Inc., a subsidiary of Phillips 66 Company.

VARIETY OF SIZES AND SHAPES

Fluid Controls produces a variety of manholes to supply a wide range of needs. Many different tops, bottoms, inlets, and outlets are available, including:

- ***Flanged top***
- ***Flat bottom***
- ***Cone top***
- ***Pipe-through manhole***
- ***Dual-containment manhole***
- ***Benched bottom***

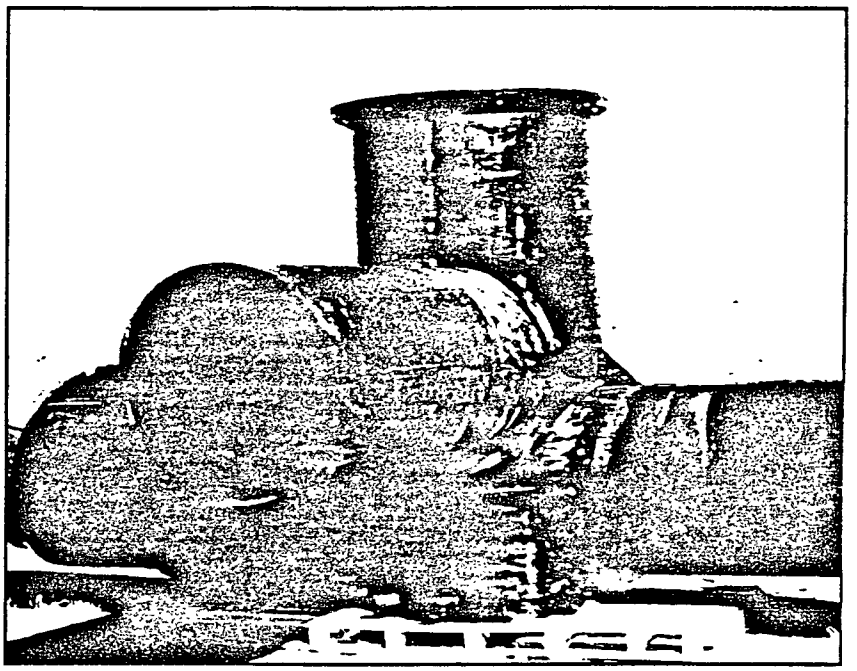

Polyethylene is tough! It can bend and flex with various loading conditions. This toughness means fewer potential leaks and longer life.

Lightweight polyethylene manholes are ***easy to install.*** Smaller pieces of equipment can be used to place these manholes, and inlets and outlets are correctly positioned during the manufacturing process. These inlets and outlets are extrusion-welded into place to be leak-free.

Polyethylene offers a wide range of ***chemical resistance*** to acids, bases, and many organic compounds. Because of this resistance, chemical attack from hydrogen sulfide and sulfuric acid does not occur.

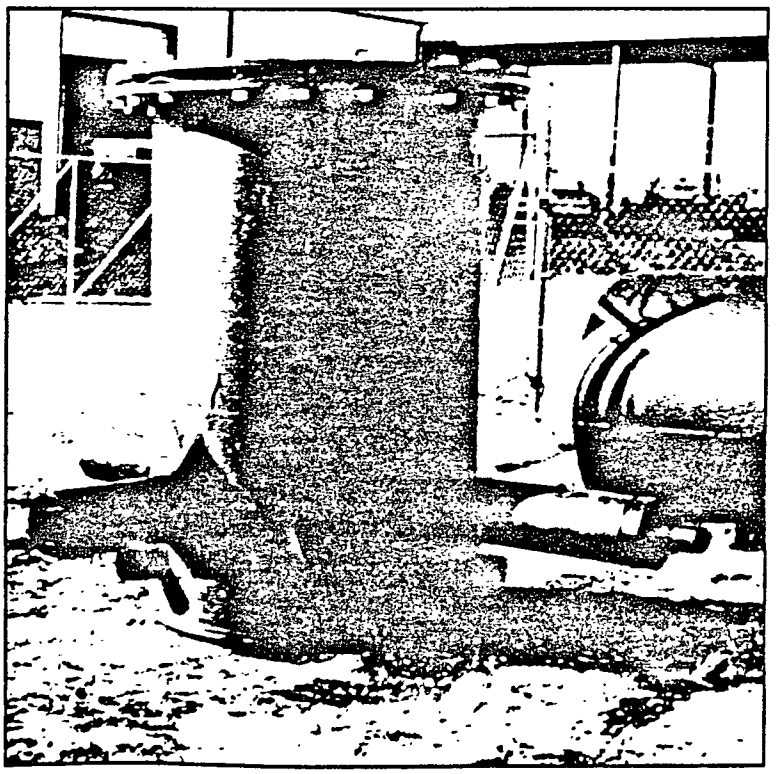

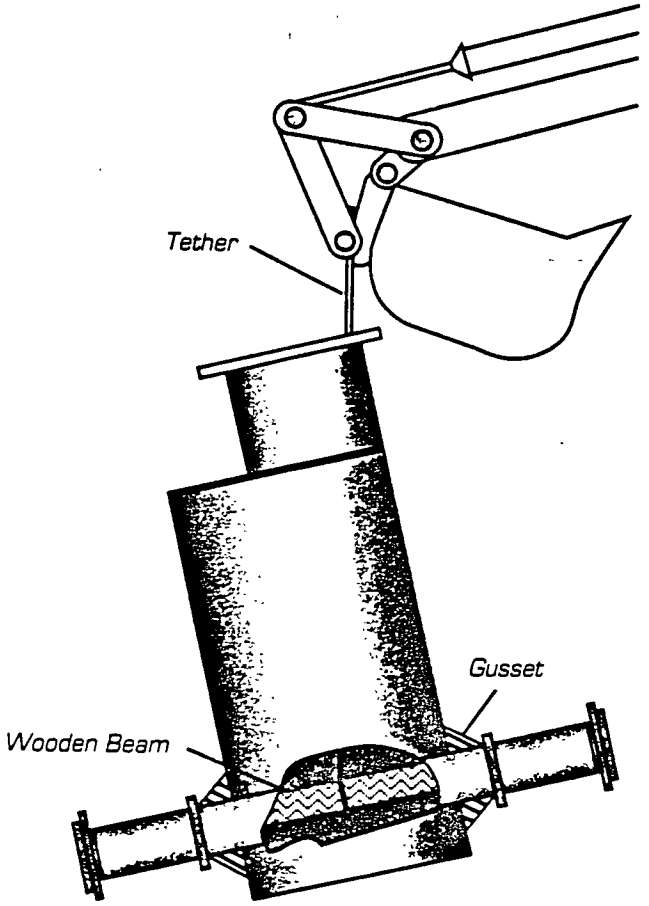

At Fluid Controls, we make our polyethylene manholes tough and light weight. Inlets and outlets are welded into place during manufacturing and manhole height is set before delivery. Planning and accurate information is needed for timely and efficient installation.

BRINGING THE MANHOLE TO GRADE

After the manhole is attached to the pipe and backfilled, it can be brought to grade. For flanged top manholes, the top is usually 6 to 12 inches above grade. This extra height allows easy access to flange bolts and prevents loading on top of the manhole. In roadways, a concrete slab or cap capable of handling an H-20 load is suggested to provide independent support for the manhole cover. The load from cars and trucks is spread away from the manhole by use of this concrete slab.

UNLOADING

Polyethylene manholes are unloaded from the truck using a fork lift or a boom truck and a nylon sling. A timberbeam can be used inside the manhole between inlets and outlets for easy lifting.

BACKFILL PROCEDURE

Polyethylene manholes are installed like polyethylene pipe. The backfill should be free of debris, large chunks, and large stones. The fill is placed around the manhole evenly in approximately 12-inch lifts. Compaction of 90% Standard Proctor Density is satisfactory for areas without roads or traffic. Under roadways, Class I material with 95% compaction is required.

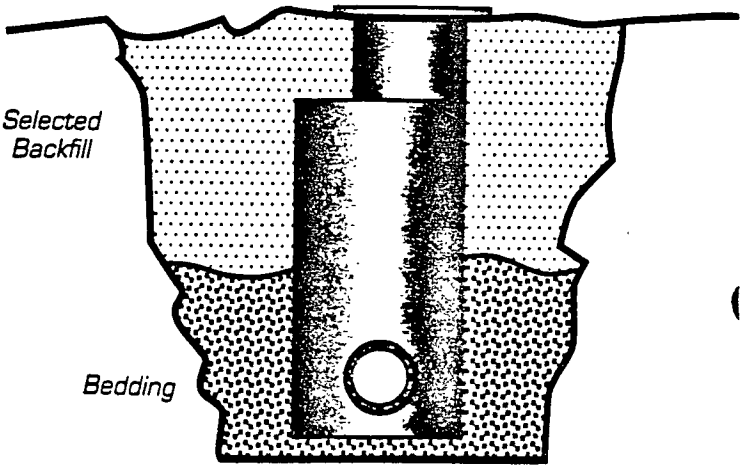

FIELD INSTALLATION

Trench preparation is important for good long-term results. The trench opening must be dry. Excavation to native soil usually makes a good base with Class I material (crushed stone) as the next layer forming a foundation. Foundation compaction should be 95% Standard Proctor Density.

TOPS AND CONES

Polyethylene manholes are made with concentric, eccentric, and flanged tops. Manholes in highway traffic areas use concentric and eccentric cones. A concrete pad reinforced with rebar is used to encase the cone and transfer the H-20 load to the soil around the manhole. A typical drawing is shown below.

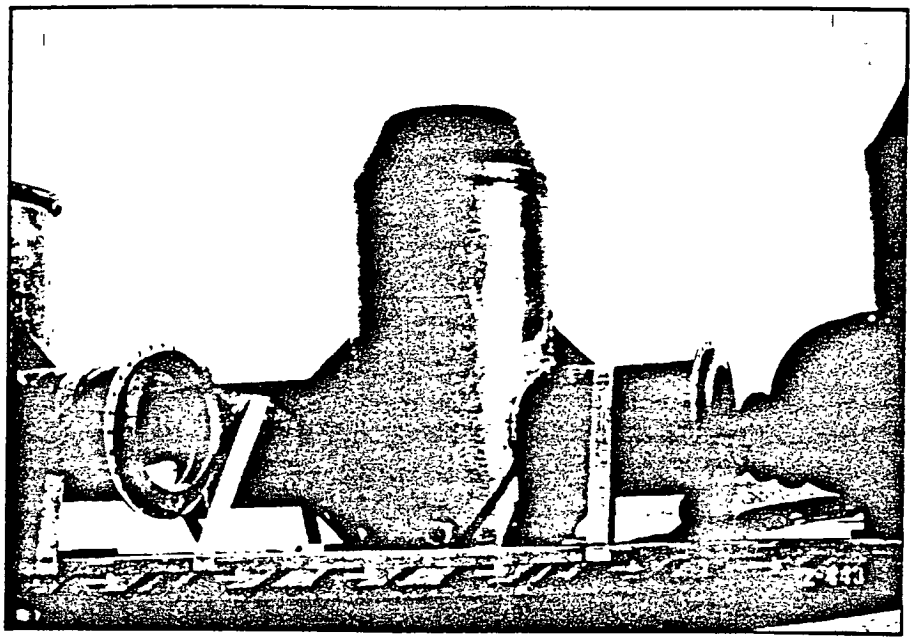

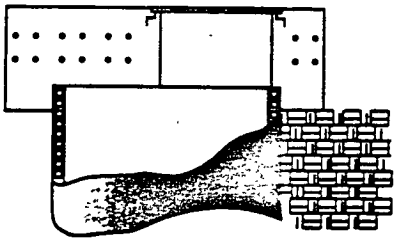

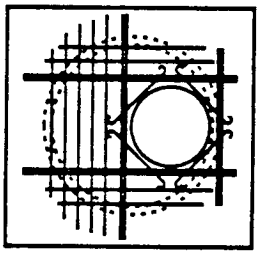

For safety reasons, many users prefer the eccentric top. This top provides easier access to manhole ladders. Standard cast iron frames and lids are used with polyethylene manholes.

In industrial plants, flat flanged tops are used. The flanged top provides easy access and ventilation. A polyethylene top provides corrosion protection and a good seal.

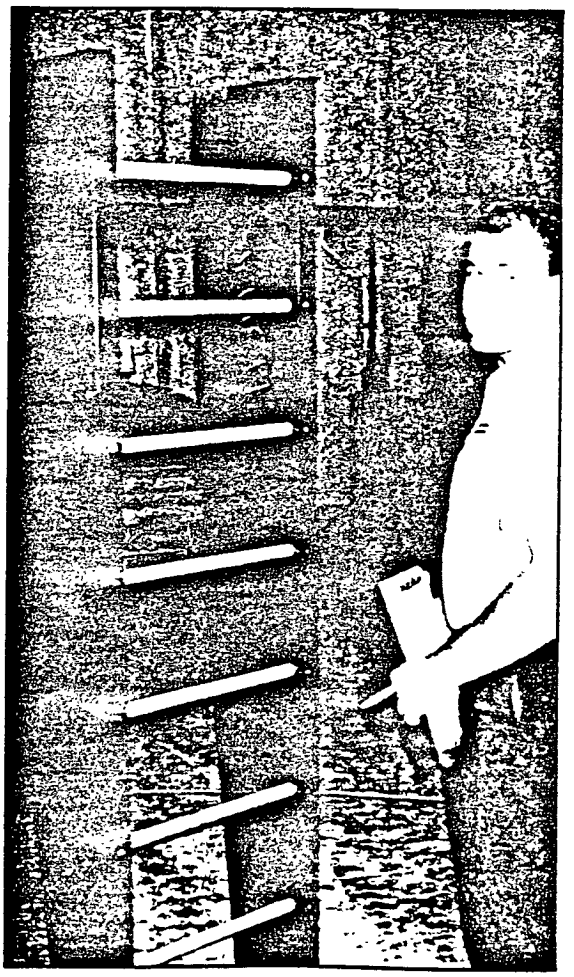

LADDERS

Polyethylene manholes are covered by OSHA safety standards. Our ladder design has been inspected and meets all OSHA safety requirements.

Inlets and outlets for polyethylene manholes can be attached anywhere around the circumference of the manhole. Extrusion welding is used to attach polyethylene pipes to the body of the manhole. This method of welding provides tough, strong connections.

Inverts can be open, benched, or a pipe can be run through the manhole. Where flow is critical, the benched or pipe-formed bottom is best. The open bottom allows for proper flow in applications with adequate slope.

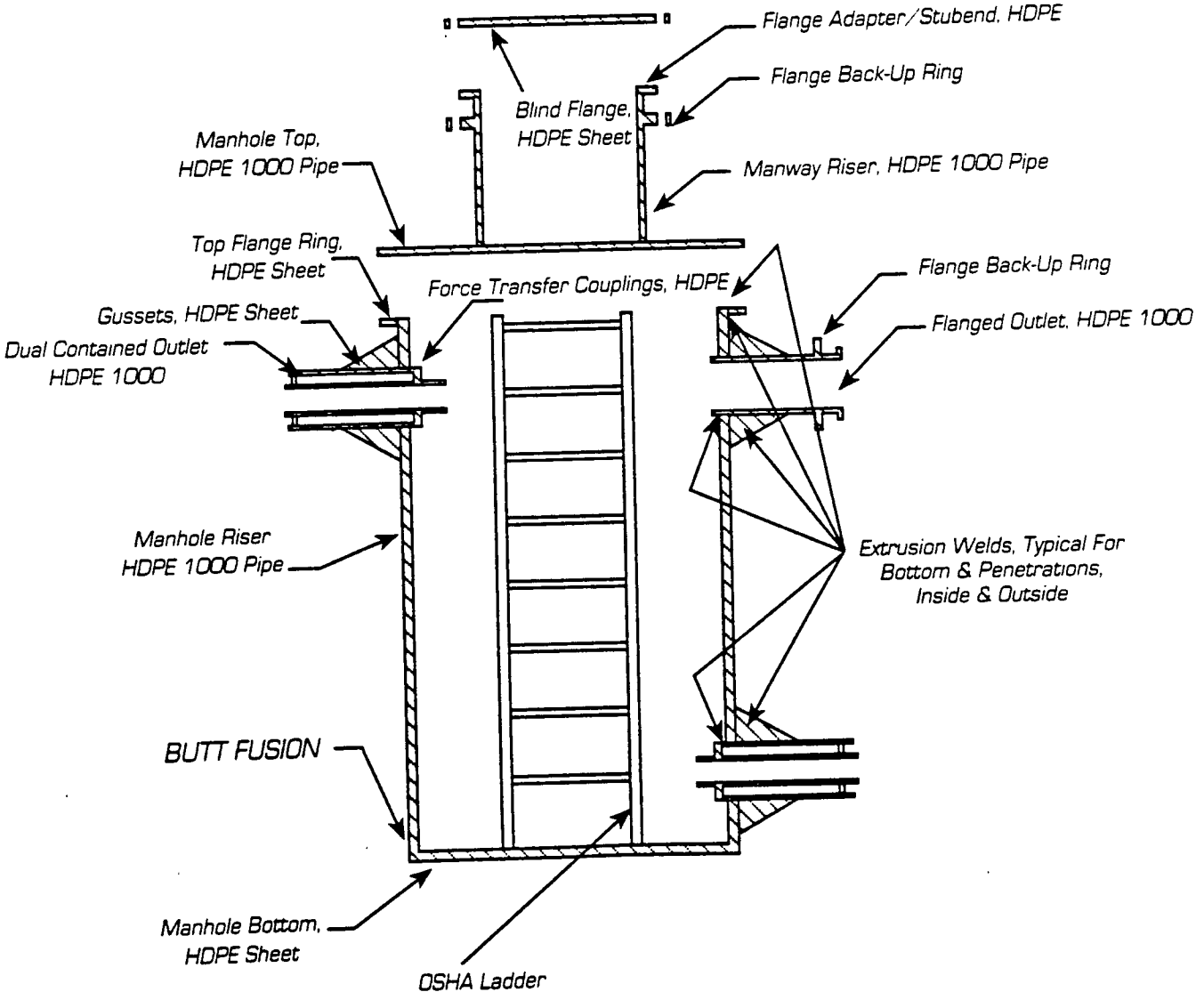

Typical Manhole with Dual & Single Wall Outlets.

In polyethylene dual containment piping systems, manholes are used as leak detection points and allow for a change in direction.

The manhole permits the continuation of the containment and allows access to the carrier (inside) pipe. Leak detection ports can be installed on the upstream side of the manhole, since the downstream side is normally sealed. Any liquid from the opening between the two pipes signals a warning of a possible leak.

The manhole below is dual-contained, a design that may be required in some situations.

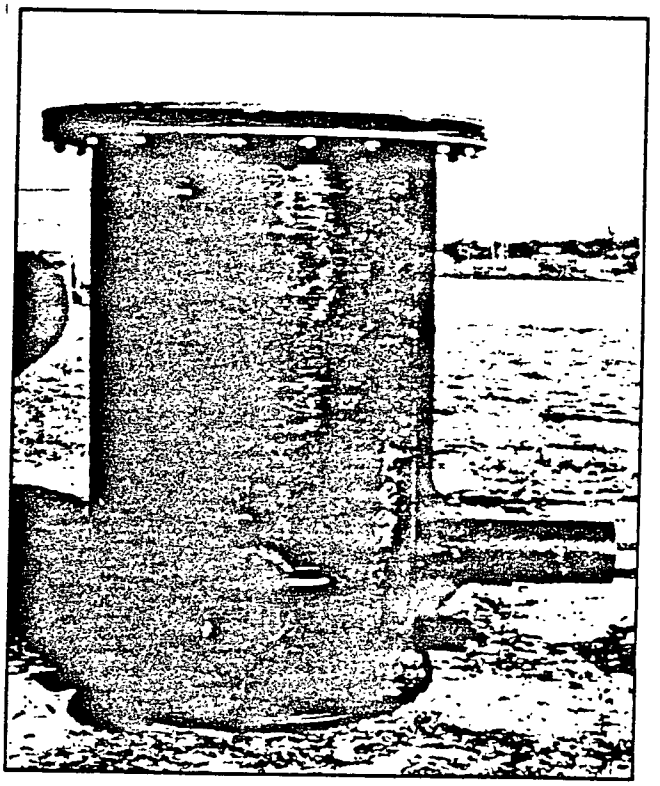

Typical dual-containment design.

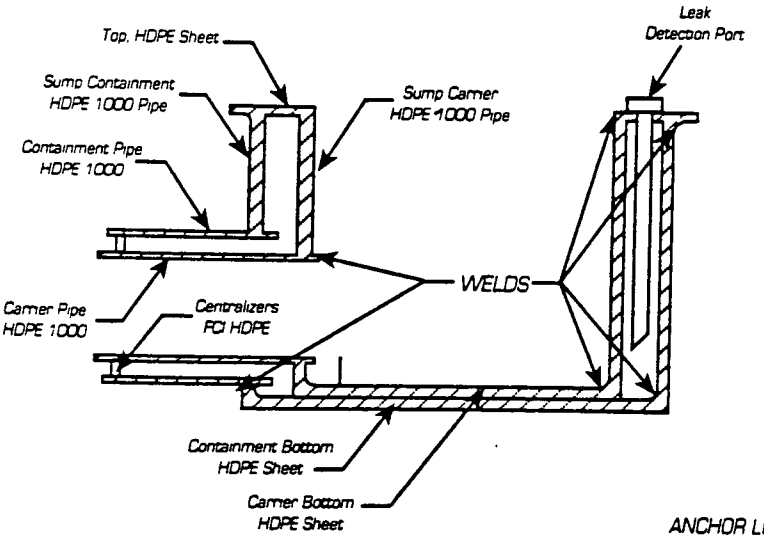

Dual-containment manhole.

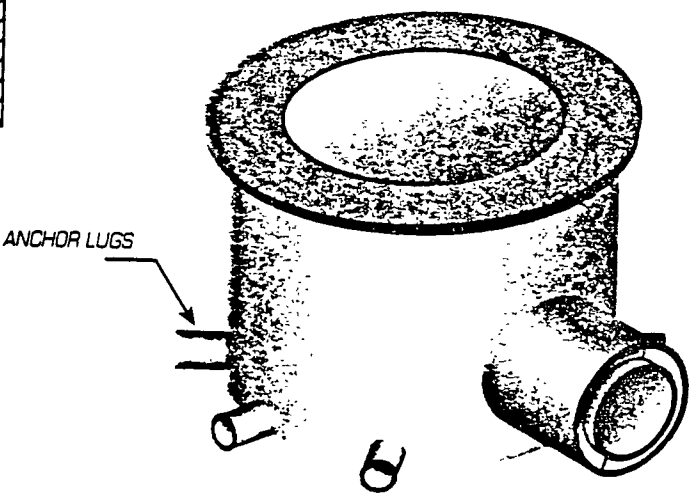

CHEMICAL PLANTS

Plants with corrosive chemicals in their underground pipes are seeing the benefits of corrosion-resistant, high-density polyethylene pipe and manholes. This near leak-free system means **less pollution and lower operating costs** for chemical plants.

By butt-fusing high-density polyethylene pipe and flanging the manhole connections, a very tight system is achieved. Fluid Controls' manholes are engineered to fit precisely and all joints are **extrusion-welded** to prevent leaks.

The paper industry is a frequent user of these pipes and manholes. The effluent is most often corrosive and may be abrasive, as well. Since high-density polyethylene pipe and manholes are corrosion and abrasion resistant, they work well for these applications.

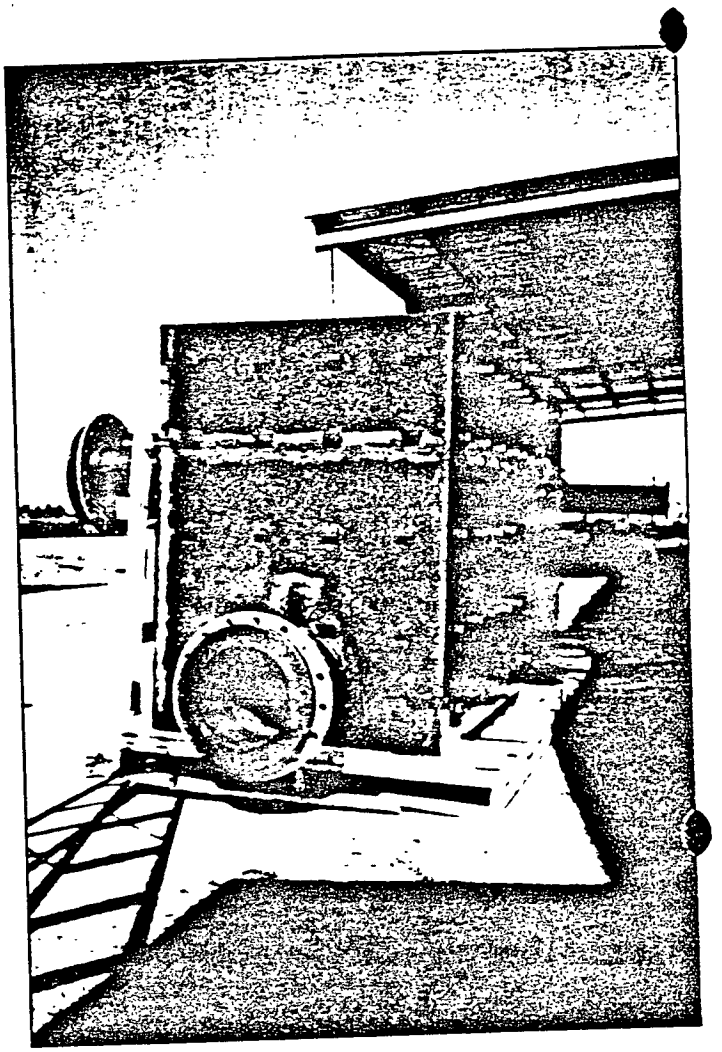

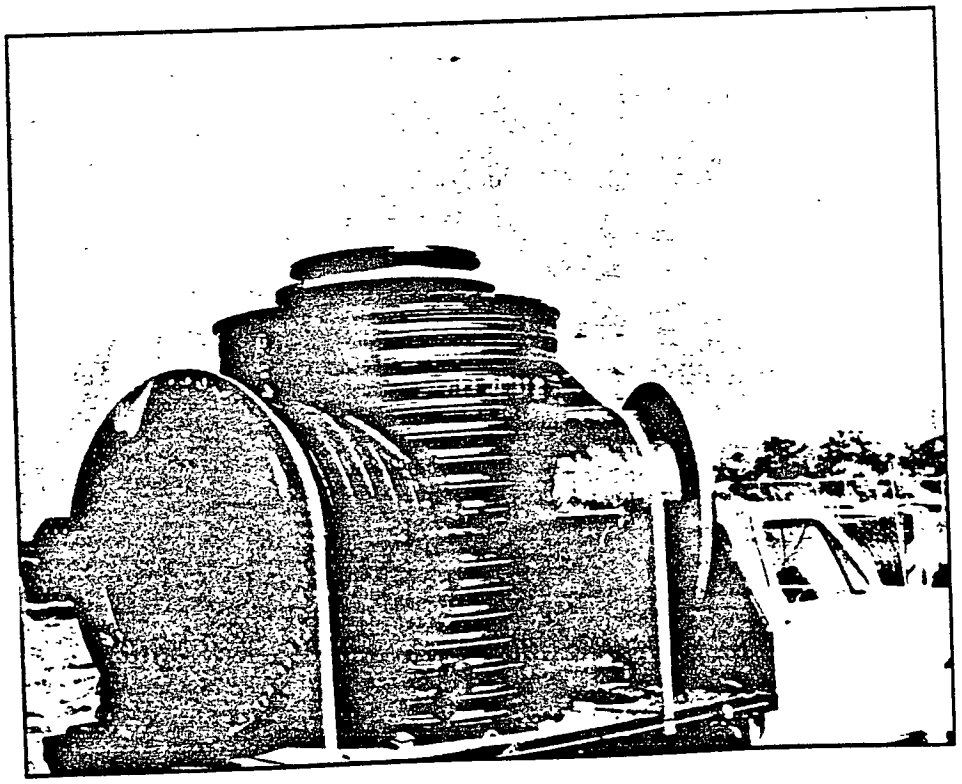

SPECIAL PURPOSE STRUCTURES

HDPE Manholes from Fluid Controls, Inc. serve many specialized purposes. Whatever your application requirements, a custom designed HDPE manhole structure could be the answer to your needs. Many hazardous and/or toxic material handling problems are solved by Fluid Controls, Inc. using HDPE fabricated structures.

The picture below shows a specilized HDPE structure used as a methane condensate and removal structure. Used to "dry" the gas before it is burned in landfill flare systems, these structures are a state of the art component in modern landfill methane recovery systems.

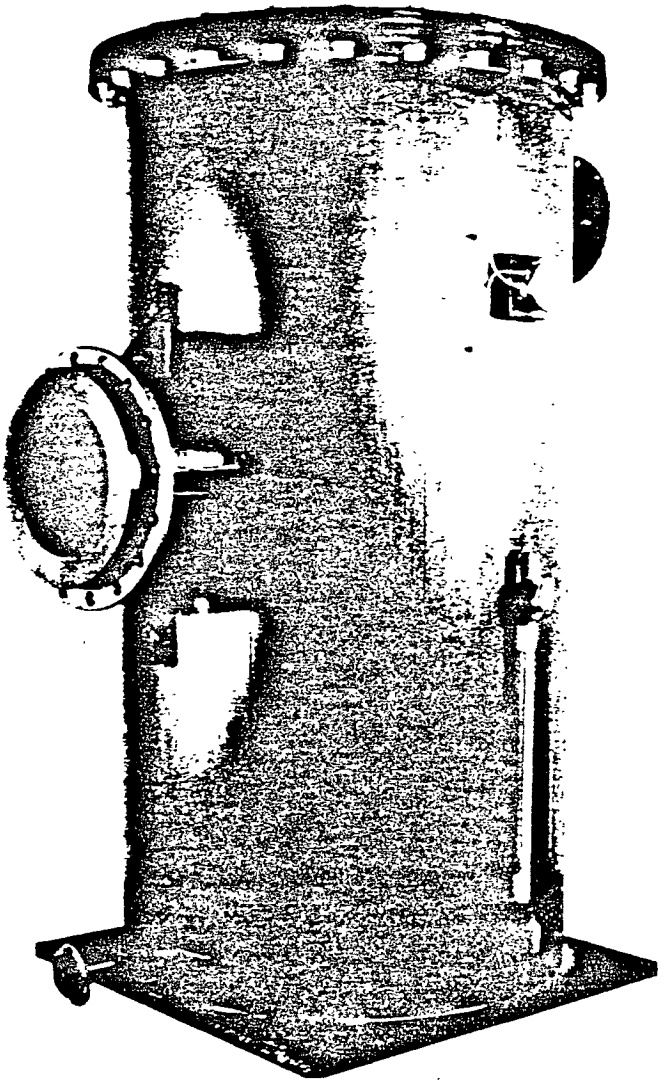

HDPE Manhole

Because polyethylene manholes provide the highest level of reliability, applications vary from sanitary sewer uses to handling toxic chemicals.

SANITARY SYSTEMS

In sanitary sewers, hydrogen sulfide is the primary cause of corrosion. Hydrogen sulfide is converted to sulfuric acid, which attacks concrete and eventually destroys concrete manholes and pipe. The ***corrosion resistance*** of polyethylene and its toughness make it a natural for manholes. Polyethylene manholes remain leak free because there is no chemical attack. The toughness of polyethylene reduces the chance of cracking during installation.

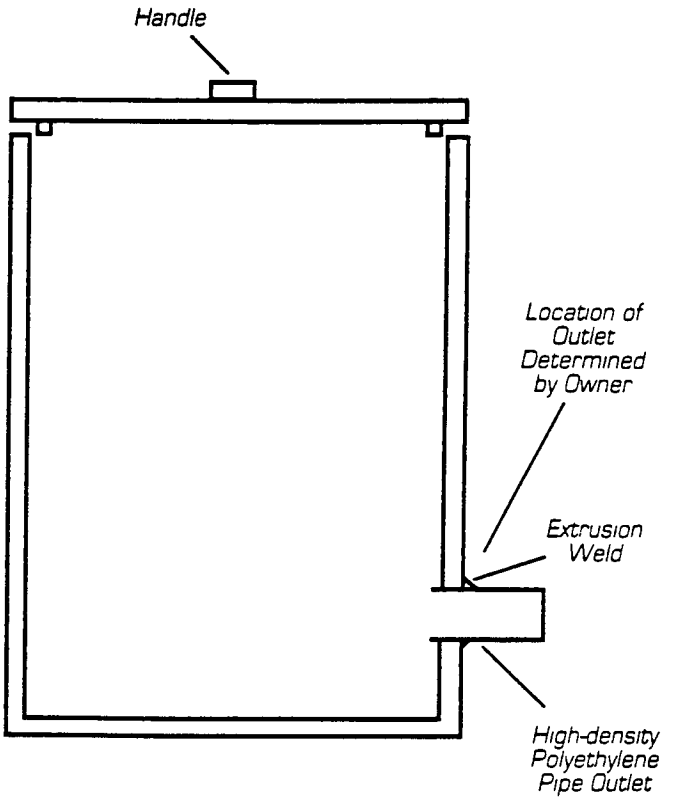

High-density polyethylene leak detection manhole.

LANDFILLS

Polyethylene manholes are used for both industrial and sanitary landfills. Leachate collection systems of polyethylene pipe connect to polyethylene valve boxes and wet wells to pump the leachate to treatment or holding areas.

Even in sanitary landfills there are a wide range of corrosive substances present. Polyethylene pipe is a proven material for these applications because of its chemical resistance.

Landfills that handle industrial wastes are lined with high-density polyethylene materials – many using two liners. The area between the liners is designed to catch any leaking liquid in a perforated pipe. This pipe is then attached to a solid pipe and any leakage is carried to a polyethylene manhole.

Polyethylene manholes are used since they can be made ***leak-free.*** Connections are welded. Unlike concrete, polyethylene is not porous. No water penetrates through polyethylene.

The containment of valves and flow measurement instrumentation is another excellent use for Fluid Controls, Inc. High Density Polyethylene Manholes. These "valve boxes" allow containment and easy access of your valves, flow instrumentation, pressure gauges, sampling ports, and other piping system components. HDPE manholes can be fabricated as units with all valve and instrumentation components factory installed to make field installation fast and easy. Pump houses and well heads are other cost effective uses for HDPE manhole structures. Since HDPE is a very tough ductile material, it is usually unaffected by pump vibration. These structures can also accomodate various leak detection requirements, depending on your application's needs.

Single or dual containment valve box structures are available in a wide range of sizes, configuations and depths. Lids are available in cone or flat top with rain tight or gas tight covers. Optional lockable lids are also available. From 18" to 54" in diameter, High Density Polyethylene Manholes from Fluid Controls, Inc. can provide fast and easy answers to your valve box questions. Complete design assistance is only a phone call away.

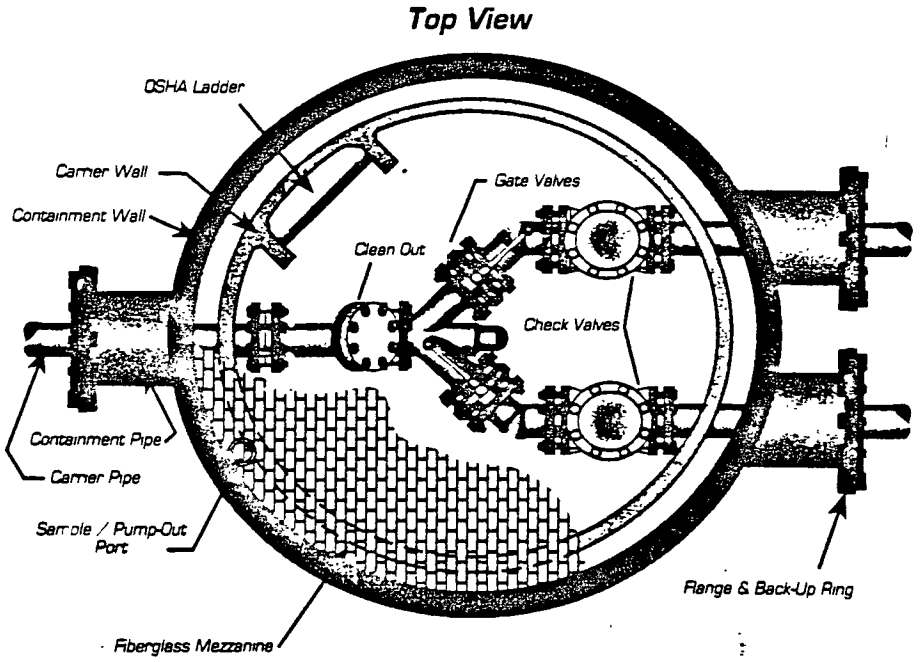

Dual Contained Valve Operating Manhole

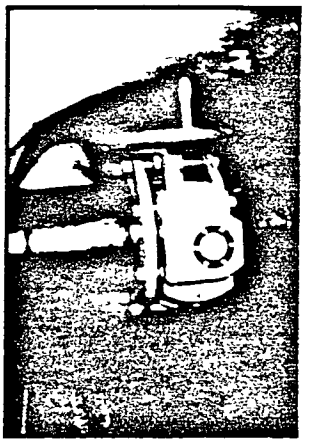

ANCHORING

Polyethylene manholes are used in many applications where the crown of the pipe rests below the water table. This creates an upward force of flotation. In these instances, the base of the manhole should be encased in concrete. Rebar should also be used in the concrete to handle the forces that can develop.

In industrial applications, large changes in temperature may occur in the sewer system, causing the pipe to grow or shrink. These forces may result in breakage of inlet and outlet connections at the body of the manhole.

To prevent forces of expansion and contraction from reaching these connections, a waterstop is welded to the high-density polyethylene pipe. This is needed because concrete does not adhere to high-density polyethylene pipe. The waterstop forms a mechanical attachment point, transfering forces away from the manhole.

Concrete encasement of the manhole base in industrial plants is good practice, as it prevents flotation and protects the manhole connections from the forces of expansion and contraction. A rebar cage is then built around the waterstop and pipe. Rebar is needed because unreinforced concrete will break when stressed.

Gussets are used as reinforcement, providing additional strength to inlet and outlet connections.

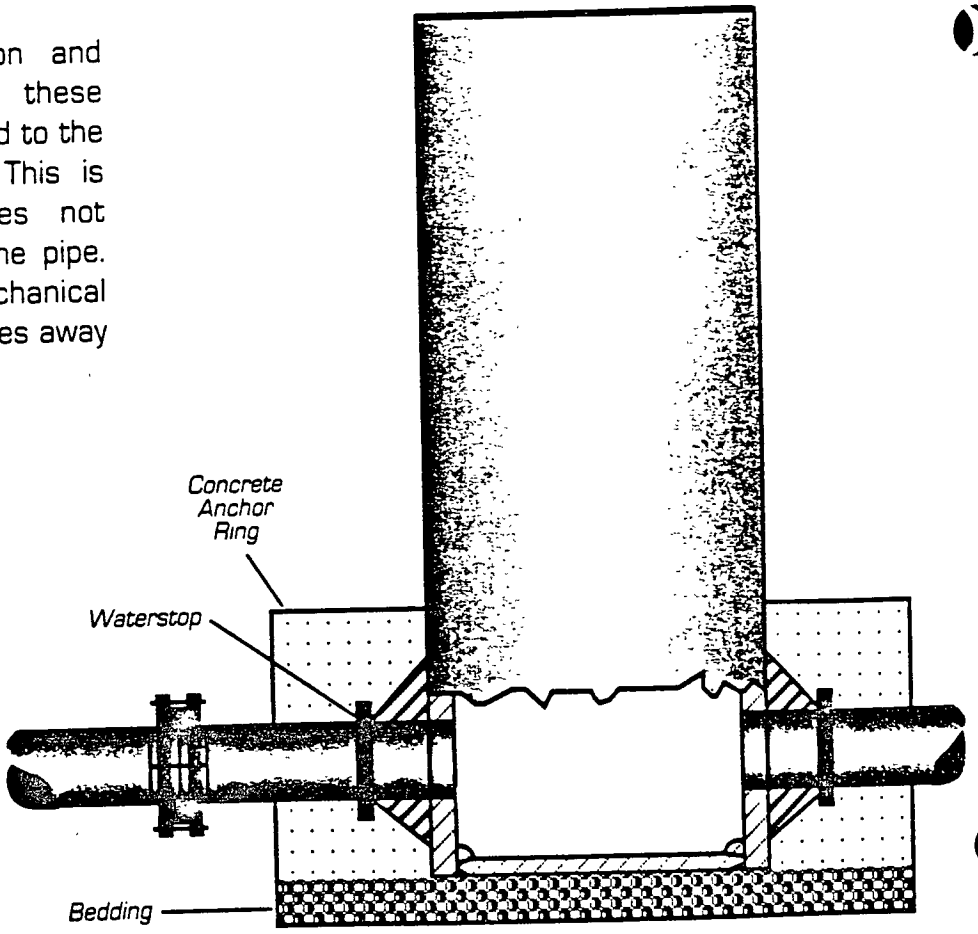

Manhole base, inlets, and outlets encased in concrete.

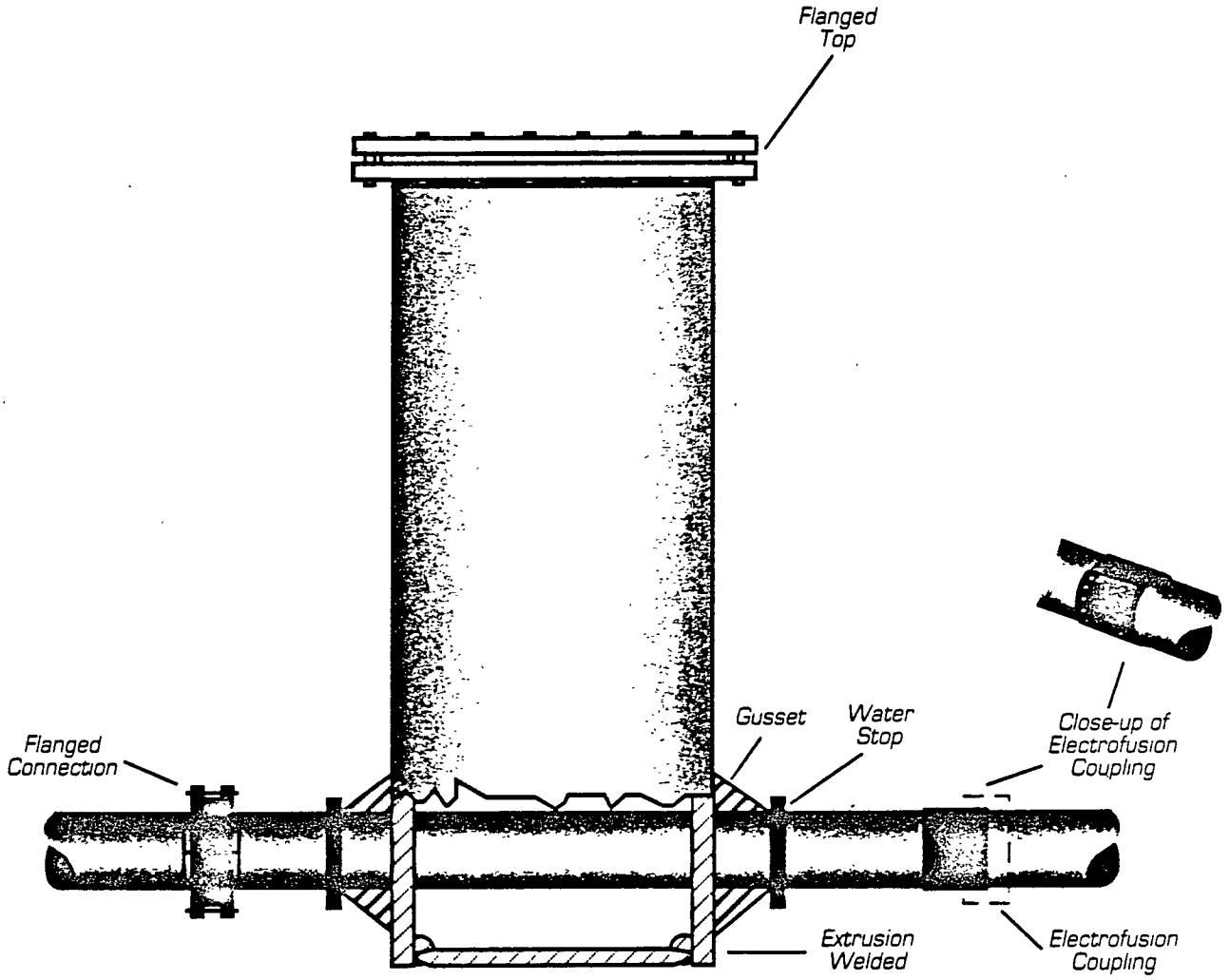

Typical flange connection.

CONNECTIONS TO MANHOLES

In most industrial applications, flanges are used to connect manholes to solid wall pipe. The flange connections provide strong, leak-free connections and can handle the expansion-contraction that often occurs.

Electrofusion couplings offer a fast, corrosion resistant connection to use with high density polyethylene manholes. No movement of the pipe or manhole is required when used with a single wall pipe. These couplings fuse high density polyethylene pipes together for leak-free connections.

OD	ID	Wall Thickness	Bottom Thickness
36	33.784	1.108	1.0"
42	39.416	1.211	1.0"
48	44.336	1.454	1.0"
54	50.676	1.662	1.5"

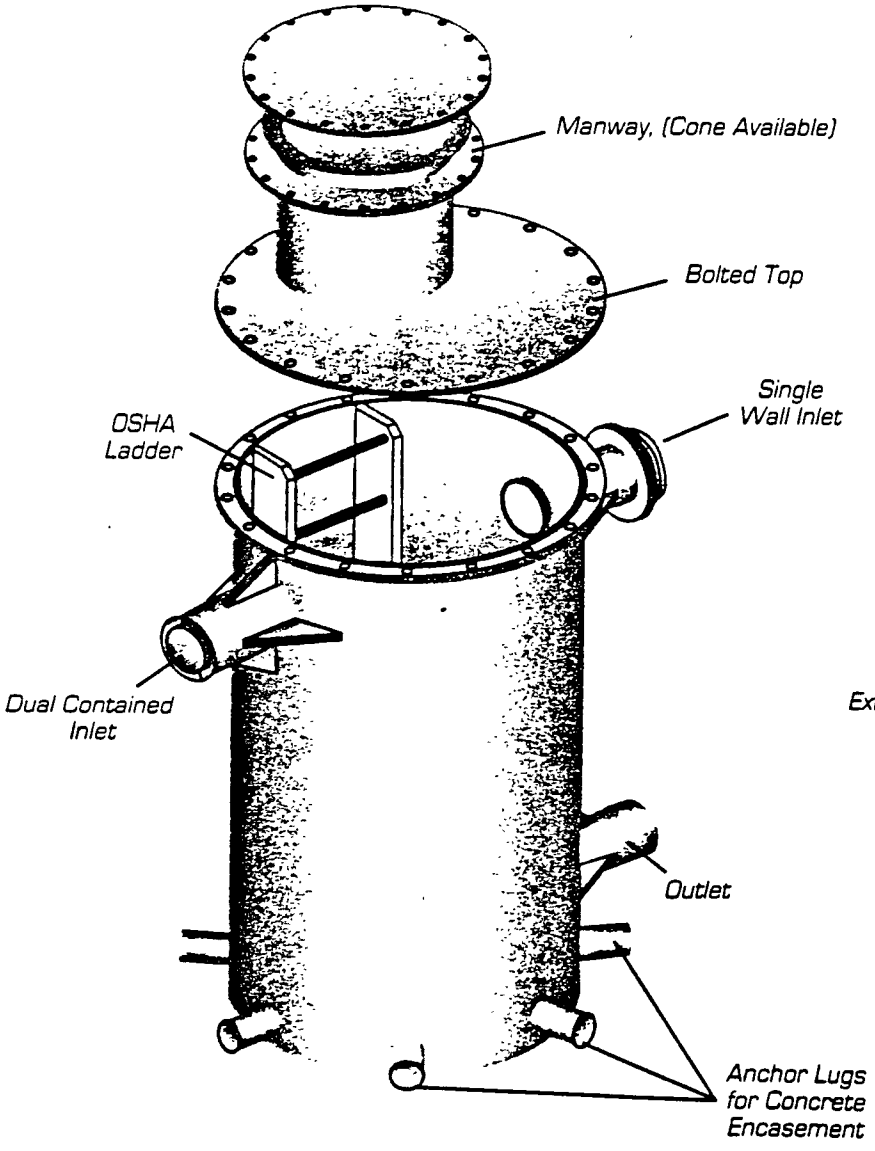

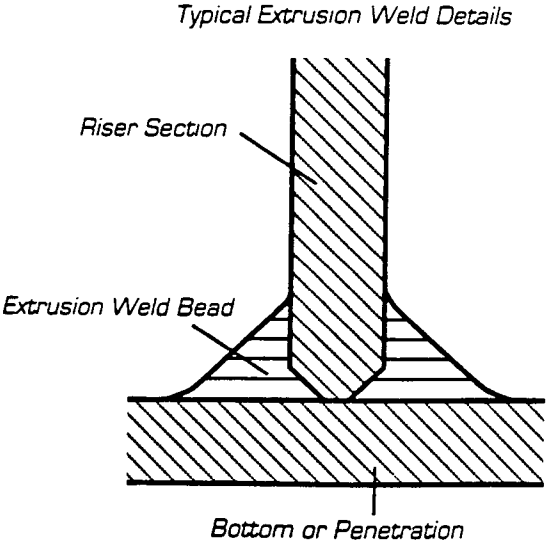

Solid wall polyethylene manhole.

Typical Polyethylene Manhole Installations

Project and Location	Manhole Diameter	Height	Description/Comments
Landfill Leachate Removal	48"	8 Feet	Manholes used for dual containment of Ells and leak detection. Inlet pipe 4" x 8".
Paper Combined Sewer	60"	8 Feet	Manholes used on combined sewer 48" diameter inlet and outlet.
Bleach Plant Acid Sewer	48"	9 Feet	Manholes made with butt fused bottoms and tops. System designed to prevent chlorine escape. Inlet and outlet pipe 21.5".
Leachate Collection Pump Station Manhole	48"	10 Feet	Manholes used as collection Sump. Pumps installed to move leachate in 4" pipe to pond. Two 4" inlets and one 4" outlet to force main.
Landfill Leachate Collection	48"	18 Feet	Leachate collection lines connect to manholes to provide access for cleaning. Pipe connection 8".
Chemical Plant Outfall	48"	25 Feet	Manhole used to combine flow from several polyethylene lines. Pipe sizes 10" and 12" were inlets and 16" pipe was the outlet.
Dual Contained Collection Sump	54" OD, 48" ID	6 Feet	Manhole used to collect process run off. Dual contained HDPE pipe connected to sump. Outlet pipe is 4" x 8" dual contained.
Dual Contained Manhole	54" OD, 48" ID	15 Feet	Part of dual contained piping system for super fund project. Pipe size 4" x 8".

Raychem

Ultratec Division

Ultrafuse*
UF-C

Ultrafuse Couplers for Polyethylene Pipe

Ultrafuse UF-C couplers are new wraparound electrofusion couplers. The fusion element consists of an electrically conductive Ultra High Molecular Weight Polyethylene (UHMWPE) polymeric sheet.

UF-C couplers are wrap-around couplers for joining or repairing polyethylene pipes. They provide a simple method for welding joints without requiring butt fusion machines The unique wraparound construction allows Ultrafuse UF-C couplers to be used to join any size of PE pipe in a range 4 to 24 inch. Larger diameters can be accommodated by installing two or more couplers in a "daisy chain" fashion. For specific installations in this range, contact your local distributor or your Raychem representative
The use of an electrically conductive UHMWPE fusion element allows the couplers to heat and fuse without embedded resistance wire heating coils
The fusion element is laminated into the coupler body that is made of high density polyethylene (PE 3408) This material provides the mechanical strength of the coupler and is selected for its outstanding performance in pipe applications

On its inner face, the UHMWPE fusion element is lined with another layer of polyethylene The coupler is built with a gradual taper on one end so that it will weld to itself at the overlap area, forming the assembled coupler into a tube

Easy to install
After the pipe ends have been aligned and scraped/abraded to expose uncontaminated PE, the UF-C coupler is simply wrapped around the pipe Clamping chains hold the coupler tight to the pipe ends and hold the coupler overlap tight to the coupler body When energized, the Ultrafuse fusion element provides heating over its entire surface, quickly melting the adjoining pipe and coupler surfaces The pressure generated by the thermal expansion of the heated polyethylene brings the coupler and pipe wall into intimate contact The combination of melt pressure and temperature produces a high quality fusion weld
Multiple pop-out melt flow indicators provide visual feedback on the status of the welding around the entire circumference of the coupler and in the overlap area, allowing the operator to adjust the installation time according to prevailing ambient conditions

Ultrafuse UF-C couplers are designed to be installed with a generator or line voltage of nominal 220 Volts A simple, rugged control box provides the convenience of an on/off switch and the added security of a ground fault interrupter/residual current device

Inspectability
All critical installation steps can be visually inspected after the pipes have been joined Evidence of scraping/abrading indicates that the pipe surfaces have been properly prepared Positioning marks verify the correct positioning of the coupler over the joint and melt flow in the pop-out melt flow indicators shows that the coupler was tightly clamped and energized for a sufficient length of time

Applicability
The couplers are used in a variety of applications such as in the general construction, sewage-drainage, methane recovery and similar markets They are especially useful in those situations where butt fusion machines can not be used

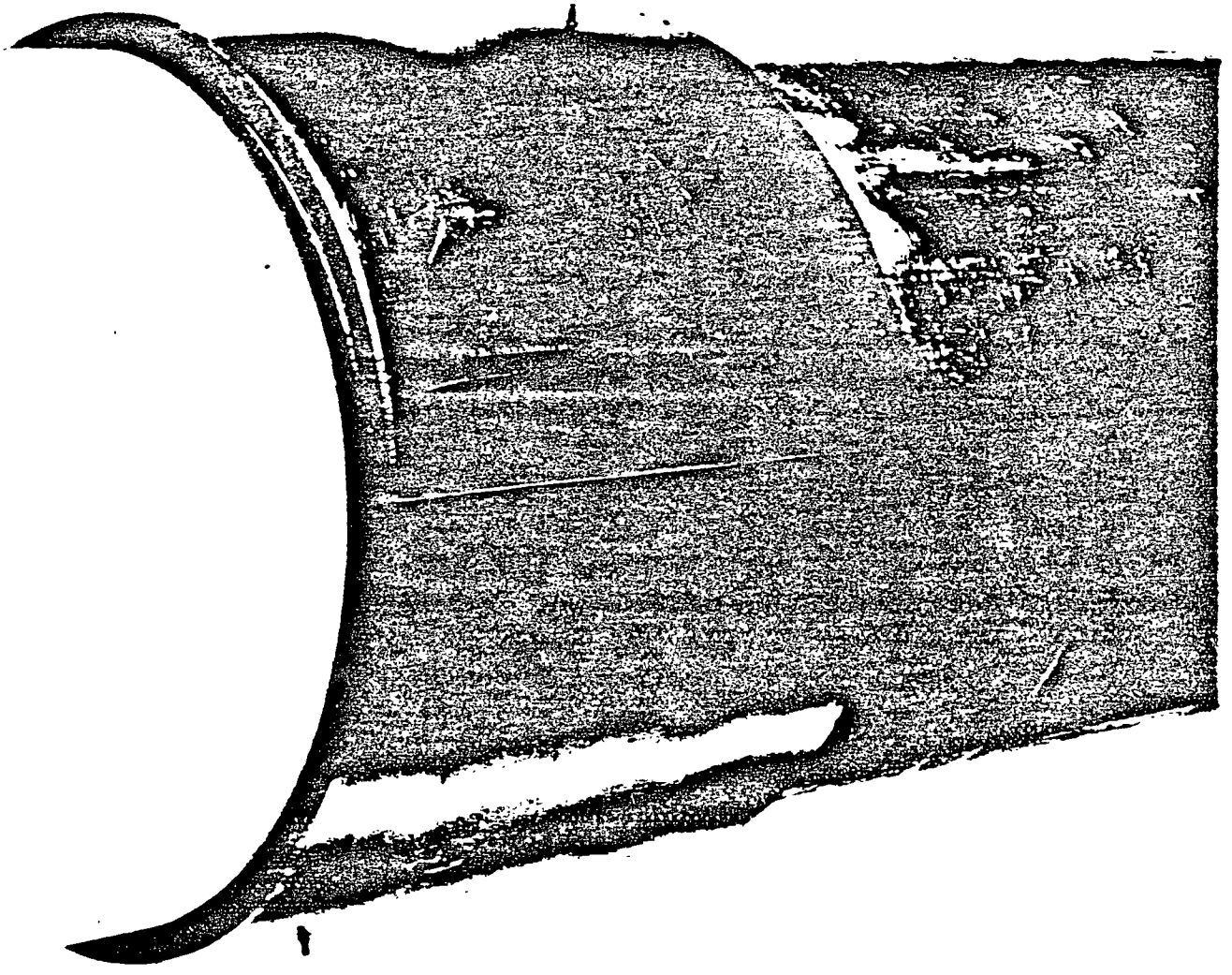

Qualification Testing

Ultrafuse UF-C couplers have been tested for conformance to Raychem specification RUD 6049 to its maximum pressure ratings. Raychem specification RUD 6049 is designed around the ASTM F 1055 specification for electrofusion couplers and includes testing for hydraulic burst pressure, sustained pressure at room- and elevated temperature, axial tensile strength and joint crush resistance.

Application information

Raychem Part Number UF-C-xx	Nominal Pipe Size (in)	Actual O.D. (in)	Coupler Wall Thickness (in)	Maximum Pressure Rating (Equivalent SDR*) (PSI)	Power Requirements kW	Power Requirements Circuit Breaker Rating (Amps)
UF-C-4	3 - 4	3.5 - 4.5	0.31	110 (15.5)	5	25
UF-C-6	5 - 6	5 - 6.625	0.39	110 (15.5)	7	40
UF-C-8	7 - 8	7 - 8.625	0.39	110 (15.5)	8	50
UF-C-10	10	9 - 10.750	0 47	110 (15 5)	10	50
UF-C-12	12	11 - 12.750	0 47	90 (19)	12	50
UF-C-18	13 - 18	13 - 18	0 47	85 (26)	15	50
UF-C-24	20 - 24	18.5 - 24	0 47	50 (32 5)	18	50

(*) Couplers may be used with lower SDR pipes within maximum rated pressure for couplers.

Ordering information

Couplers

UF - C - xx - 220

- 220 — Nominal voltage
- xx — Pipe size
- C — Type
- UF — Ultrafuse

Installation Equipment

Raychem GFI/RCD Controller	EQ-UF-GFI-control-220
Clamping strap - (Jorgensen type)	EQ-UF-Jorg-Strap
Clamping chain - (Vise-grip type)	EQ-UF-Vise-Grip-4/10
Clamping chain - (Raychem type)	EQ-UF-Clamp-12/24
Installation wedges	EQ-UF-Wedge-4 EQ-UF-Wedge-6/8 EQ-UF-Wedge-10/12/18/24

* Raychem and Ultrafuse are trademarks of Raychem Corporation

The information given herein, including drawings, illustrations and schematics which are intended for illustration purposes only, is believed to be reliable However, Raychem makes no warranties as to its accuracy or completeness and disclaims any liability in connection with its use Raychem's obligations shall only be as set forth in Raychem's Standard Terms and Conditions of Sale for this product and in no case will Raychem be liable for any incidental, indirect or consequential damages arising out of the sale, resale, use or misuse of the product. Users of Raychem products should make their own evaluation to determine the suitability of each such product for the specific application

Distributed by:

FLUID CONTROLS INCORPORATED

PLASTIC PIPING / FABRICATION SPECIALISTS

Corporate Office
3435 Stanwood Blvd. NE
Huntsville, AL 35811
205-851-6000
Fax 205-852-6005
1-800-462-0860

Mobile
P.O. Box 9081
Mobile, AL 36691
205-479-4800
Fax 205-479-5900

Arkansas
2575 W. 6th C12
Fayetteville, AR 72701
501-835-3232
Fax 501-443-4585

FLUID-LOK®

Specification Guidelines
for Leak Detection and Location Systems

Aqueous Chemical and Water Leak Detection
for Double Containment Piping, Structures and Storage Tank Systems

SECTION 16000 - ELECTRICAL

1. GENERAL:

1.1 Furnish a complete leak detection system including electronic alarm modules, aqueous chemical/water sensing cable, graphic display map, and auxiliary equipment. The system shall be capable of automatically detecting the presence of aqueous chemicals or water at any point along the continuous length of pipe and in the tank interstitial space. The system shall locate the point of origin of the liquid, with a digital display, to within +/- 1 foot. No more than 1 foot of liquid, in contact with a sensing cable at a depth of 1/16 inch, shall be required to cause an audible alarm at the electronic alarm module.

1.2 The system shall be UL listed, FM approved, and CSA certified. The sensing circuits shall be intrinsically safe for use in Class 1, Division 1, Group C and D environments when installed in accordance with the manufacturers' installation instructions.

1.3 The system manufacturer shall have at least five years of experience with leak detection and location sensor technology and shall provide written verification of current ISO 9001 registration.

1.4 The system shall be the TraceTek TT3000 leak detection and location system manufactured by Raychem Corporation, TraceTek Products Group, Menlo Park, California and supplied by Fluid Controls, Inc. 1-800-462-0860.

2. PRODUCTS:

2.1 Each electronic alarm module shall be housed in a NEMA 12 enclosure and have a 4 line x 20 character backlit LCD display which provides status and alarm data. It shall be capable of monitoring a minimum of 5000 feet of sensing cable. The alarm modules shall continuously monitor all sensing cable for liquid contact. Contact with any aqueous chemical or water shall result in an audible alarm, a "leak" LED signal, actuation of an output relay, and a digital display of the distance to the liquid location.

2.1.1 The electronic alarm module shall continue to monitor the sensing after detection of liquid. It will re-alarm if the liquid spreads or a second leak is detected.

2.1.2 The electronic alarm modules shall require no operator programming and shall automatically calibrate the entire system whenever power is applied. Test, silence and reset functions shall be activated from the front panel upon user command.

2.1.3 The alarm module shall have a multi-level security password. It shall report, date and time stamp, and record to non-volatile memory, all alarm events into an events history log.

2.1.4 The alarm module shall be capable of communicating to host systems via RS-238, RS-485 or a 4-20 ma analog interface.

2.1.5 The alarm module shall operate on 120VAC, 60 Hz, single phase power. Each module shall require a separate, dedicated 15 amp, 120VAC circuit.

2.2 The aqueous chemical/water sensing cable (TT3000) shall be resistant to corrosion. It shall detect the presence of aqueous chemicals and water. The cable shall be constructed of two sensor wires and two insulated wires embedded in a fluoropolymer carrier rod. The sensor wires shall be jacketed with a conductive fluoropolymer. The cable shall be constructed with no metal parts exposed to the environment. The sensing cables shall be capable of accommodating any number of branches using branching connectors (TT-MBC-MC).

2.3 Jumper cable shall be available to interconnect sensing cables or to facilitate remote mounting of the electronic alarm module. Jumper cable may not add more than .01% of additional length to the leak detection circuit.

2.4 A portable test box (TT-PTB-1000) shall be provided to the leak detection system installer. The portable test box shall be capable of field leak location. The portable test box shall be capable of monitoring system leak detection circuitry microamps. It shall become the property of the owner, upon system acceptance, for use in the ongoing preventive maintenance of the system.

3. EXECUTION:

3.1 All system components shall be installed in accordance with the manufacturer's installation instructions. The piping installer shall be responsible for providing a clean and dry containment pipe with free-running pull ropes and a minimum clearance of 3/4 inch at the 6 o'clock position of the containment space and tank monitoring well low points. The minimum clearance shall be maintained along straight lengths of pipe, at joints, and at elbows. The piping installer shall be responsible for installation of the sensing cable and system circuit certification consisting of a clean / dry, sealed annular space with feed thru connectors and a sensing cable circuit with less than 10 microamps over the entire circuit. The electrical contractor shall provide and install all connections, junction boxes, conduit, etc. according to applicable building codes. The panel shall be installed per the drawings. The electrical contractor shall provide for system start-up, functional testing, and mapping of the system. Supervision and training shall be provided by Fluid Controls, Inc. or its trained local representative.

3.2 Upon completion of the system installation, a factor pre-connectorized 5 foot long aqueous chemical/water sensing cable shall be temporarily installed at the far end of each leak detection circuit. The sensor shall be immersed in approximately 1 foot of water, at a depth of 1/16 inch, to confirm that an audible alarm is generated at the alarm module and that the appropriate distance to the leak is displayed. The installer shall perform and certify the tests in the presence of the owner's representative.

3.3 Upon completion of the test, and removal of the temporary test sections, the piping and tank containment systems shall be purged with -20 degree F dew point air or dry nitrogen to displace the ambient air. The containment systems shall be sealed upon completion of the purge.

3.4 A graphic display map prepared from "as built" drawings shall be furnished upon completion. The map shall indicate the location of the sensing cables, piping access ports, change

of cable direction, and cable distance readings per the manufacturer's instructions. The map shall be mounted near the alarm modules.

4. SUBMITTALS:

4.1 General - Applicable manufacturers data required to demonstrate system capabilities and compliance with this specification. Submit company literature demonstrating an intrinsically safe sensing circuit for C1D1 environments. Submit on UL, Factory Mutual and CSA approvals.

4.2 Products - Submit information on supplier's experience and a list of components for the system. Submit system components cut sheets and manuals.

4.3 Execution - Submit manufacturers installation manuals. Submit on manufacturer's installer training schedule and/or experience with the system's installation. Submit sample graphic map of the system.

TYPICAL DUAL CONTAINED PIPING SYSTEM DETAIL

Bill Of Materials

ITEM #	QTY	UNITS	DESCRIPTION	CLASS	SIZE	PART / DWG #
1		ft	CONTAINMENT , HDPE M1000 PIPE			
2		eq.	FCI REGULAR CENTRALIZERS , HDPE			
3		ft	CARRIER , HDPE M1000 PIPE			

* CONSULT SALESPERSON FOR RECOMMENDED CONFIGURATIONS

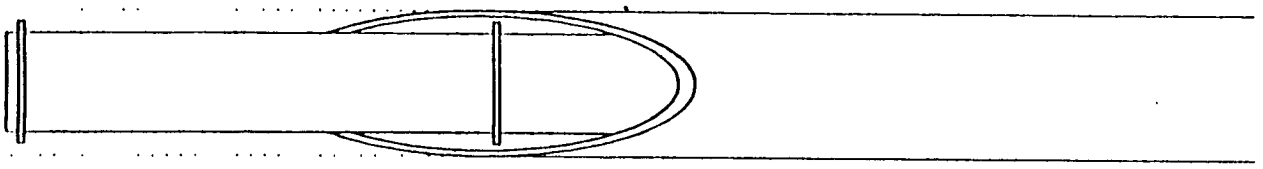

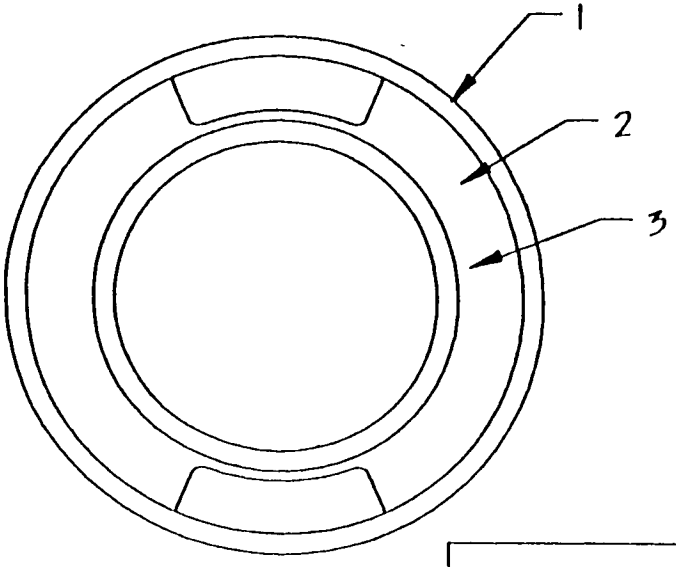

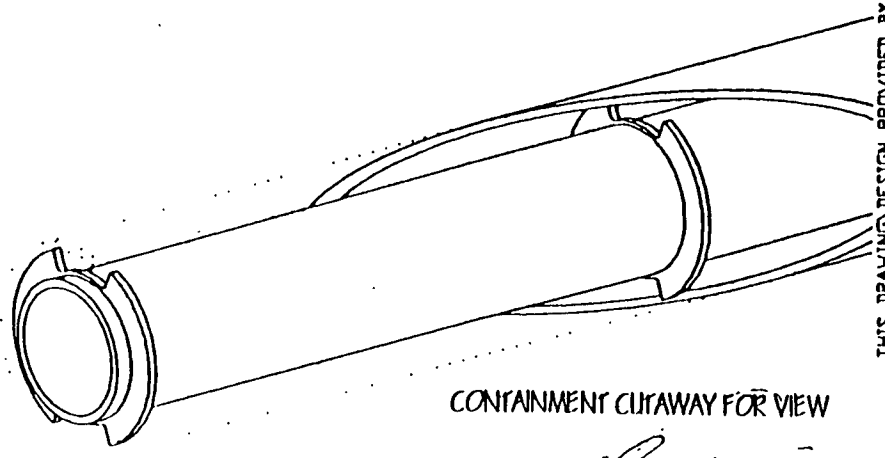

CONTAINMENT CUTAWAY FOR VIEW

THIS DRAWING/DESIGN PROVIDED BY AND PROPERTY OF "FLUID CONTROLS INC." IT IS INTENDED FOR MANUFACTURE, INSTALLATION AND IDENTIFICATION USES OF PRODUCT DEPICTED AND SHALL NOT BE CIRCULATED OR REPRODUCED WITHOUT SPECIFIC PERMISSION FROM MANAGEMENT OF "FLUID CONTROLS INC." ALL RIGHTS RESERVED

APPROVED BY:

SUBMITTAL

DRAWING NUMBER OR NAME

RTAPE

DIMENSIONS IN INCHES UNLESS OTHERWISE NOTED
LINEAR TOLERANCE = 1/4"
ANGULAR TOLERANCE = 2

SCALE:

DO NOT SCALE DRAWING

CUSTOMER

ORDER / QUOTE #

LOCATION :

FLUID CONTROLS INCORPORATED

DRAWN BY: DATE: CHECKED BY: DATE:

DUAL CONTAINED PIPE WALL PENATRATION REBAR DETAIL

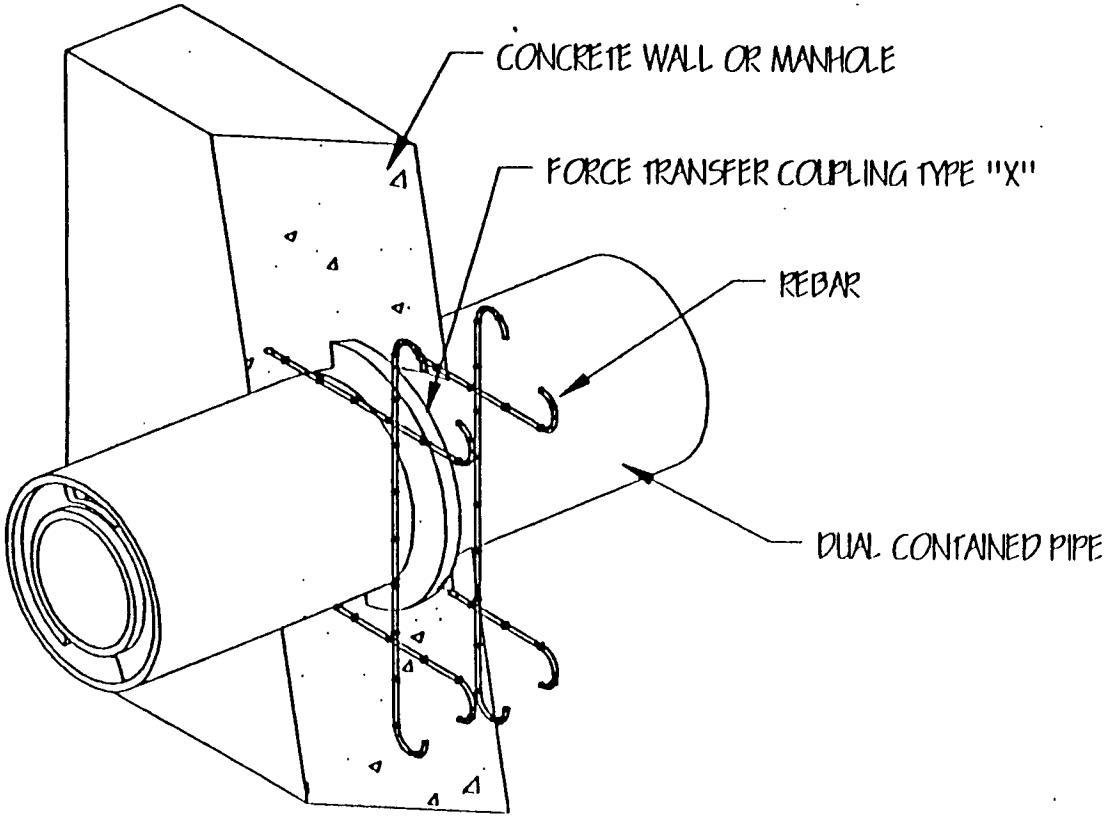

THIS DRAWING/DESIGN PROVIDED BY AND PROPERTY OF 'FLUID CONTROLS INC.' IT IS INTENDED FOR MANUFACTURE, INSTALLATION AND IDENTIFICATION USES OF PRODUCT DEPICTED AND SHALL NOT BE CIRCULATED OR REPRODUCED WITHOUT SPECIFIC PERMISSION FROM MANAGEMENT OF 'FLUID CONTROLS INC.' ALL RIGHTS RESERVED

APPROVED BY:

SUBMITTAL

DRAWING NUMBER OR NAME: Draft

DIMENSIONS IN INCHES UNLESS OTHERWISE NOTED
LINEAR TOLERANCE = 1/4"
ANGULAR TOLERANCE = 2

SCALE:

DO NOT SCALE DRAWING

CUSTOMER

ORDER / QUOTE #

LOCATION :

FLUID CONTROLS INCORPORATED

DRAWN BY: DATE: CHECKED BY: DATE:

FCI FORCE TRANSFER COUPLING
TYPE "X"

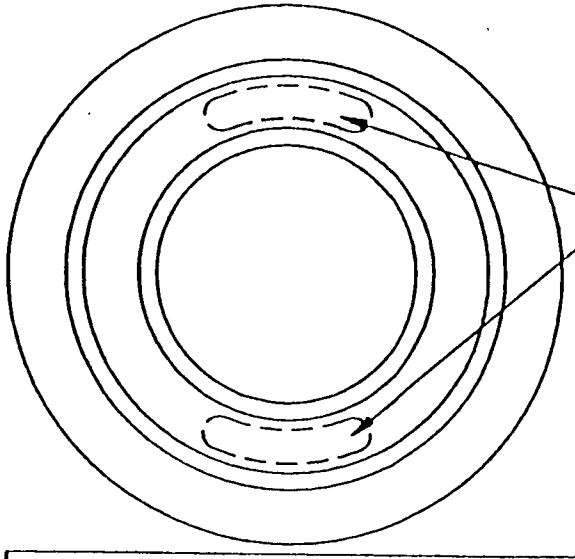

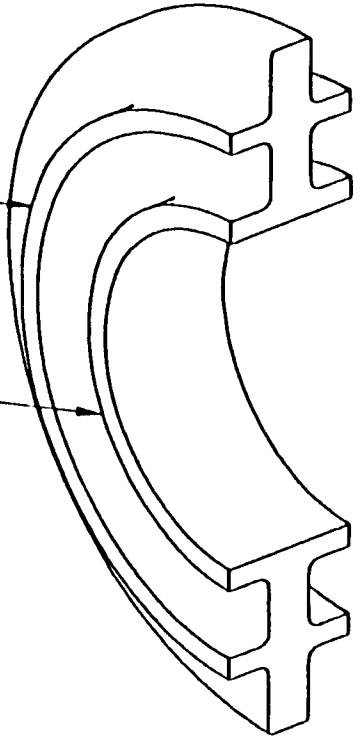

OPTIONAL
ANNULAR THRU-PORTS

NOTE: CUTAWAY FOR VIEWING

THIS DRAWING\DESIGN PROVIDED BY AND PROPERTY OF 'FLUID CONTROLS INC.'
IT IS INTENDED FOR MANUFACTURE, INSTALLATION AND IDENTIFICATION USES
OF PRODUCT DEPICTED AND SHALL NOT BE CIRCULATED OR REPRODUCED
WITHOUT SPECIFIC PERMISSION FROM MANAGEMENT OF 'FLUID CONTROLS INC.'
ALL RIGHTS RESERVED

APPROVED BY:

SUBMITTAL

DRAWING NUMBER OR NAME

DIMENSIONS IN INCHES UNLESS OTHERWISE NOTED
LINEAR TOLERANCE = 1/4"
ANGULAR TOLERANCE = 2

SCALE:

DO NOT SCALE DRAWING

CUSTOMER

ORDER / QUOTE #

LOCATION :

FLUID CONTROLS INCORPORATED

DRAWN BY: DATE: CHECKED BY: DATE:

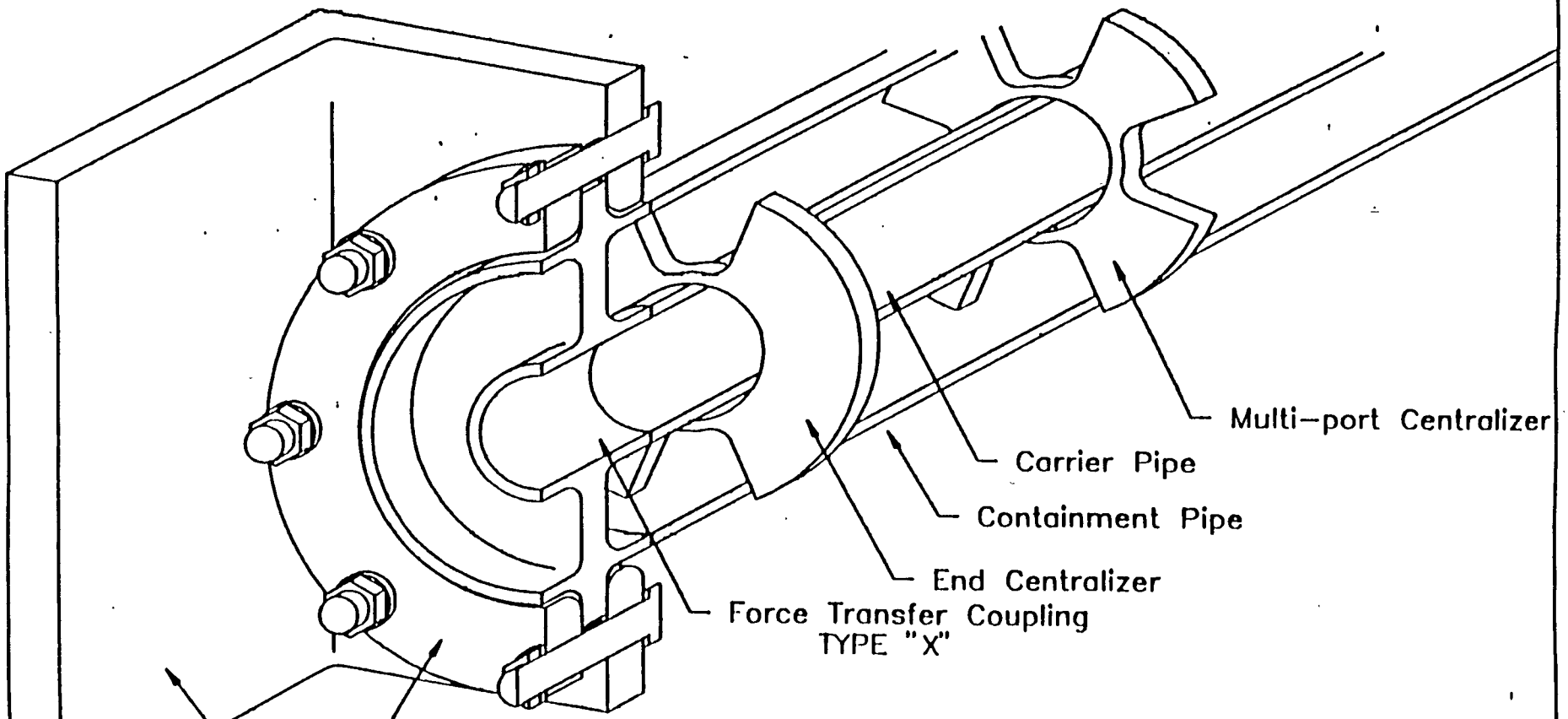

ABOVE GROUND APPLICATION OF
FORCE TRANSFER COUPLING

PLEASE CONSULT FCI FOR SPECIFIC APPLICATIONS

FLUID-LOK FORCE TRANSFER COUPLING TYPE "Y" DETAIL

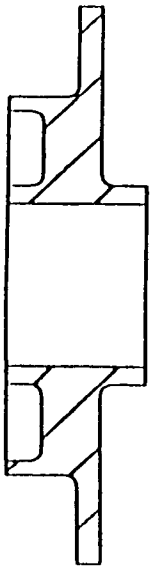

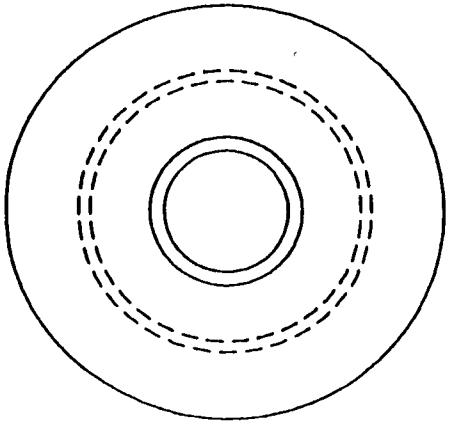

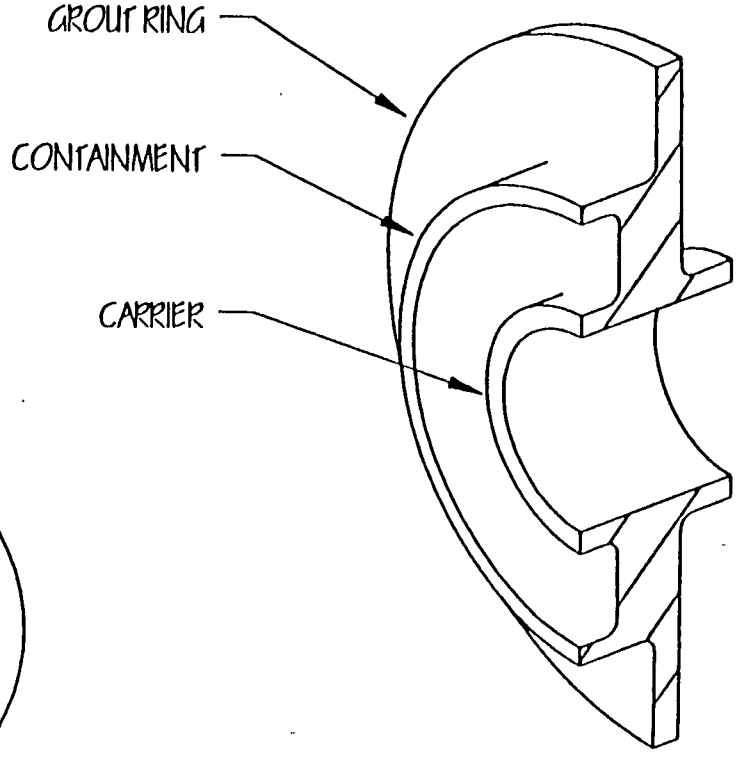

NOTE: NORMAL APPLICATION IS CONTAINMENT END TERMINATION
THROUGH CONCRETE WALL STRUCTURE
SEE WALL PENETRATION REBAR DETAIL DRAWING
CUTAWAY FOR VIEW

THIS DRAWING/DESIGN PROVIDED BY AND PROPERTY OF "FLUID CONTROLS INC." IT IS INTENDED FOR MANUFACTURE, INSTALLATION AND IDENTIFICATION USES OF PRODUCT DEPICTED AND SHALL NOT BE CIRCULATED OR REPRODUCED WITHOUT SPECIFIC PERMISSION FROM MANAGEMENT OF "FLUID CONTROLS INC." ALL RIGHTS RESERVED

APPROVED BY: SUBMITTAL

DRAWING NUMBER OR NAME: FTC Y R3

DIMENSIONS IN INCHES UNLESS OTHERWISE NOTED
LINEAR TOLERANCE = 1/4"
ANGULAR TOLERANCE = 2

SCALE:

DO NOT SCALE DRAWING

CUSTOMER

ORDER / QUOTE #

LOCATION :

DRAWN BY: mi DATE: 7/29/92 CHECKED BY: DATE:

FLUID CONTROLS INCORPORATED

FLUID-LOK DRAIN FORCE TRANSFER COUPLING DETAIL

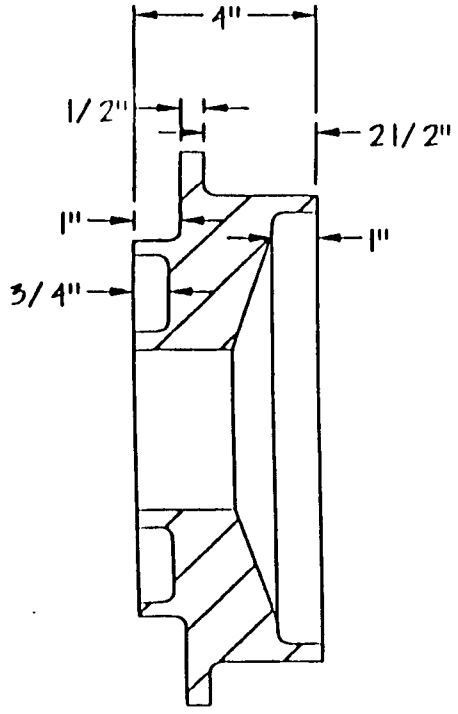

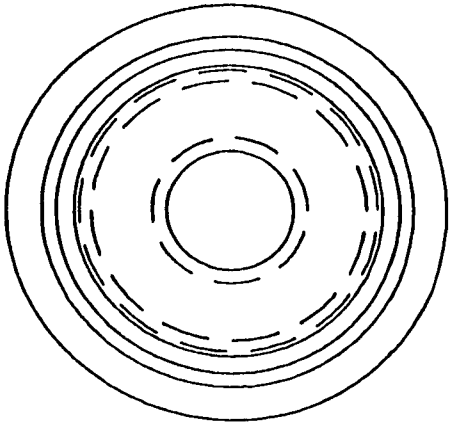

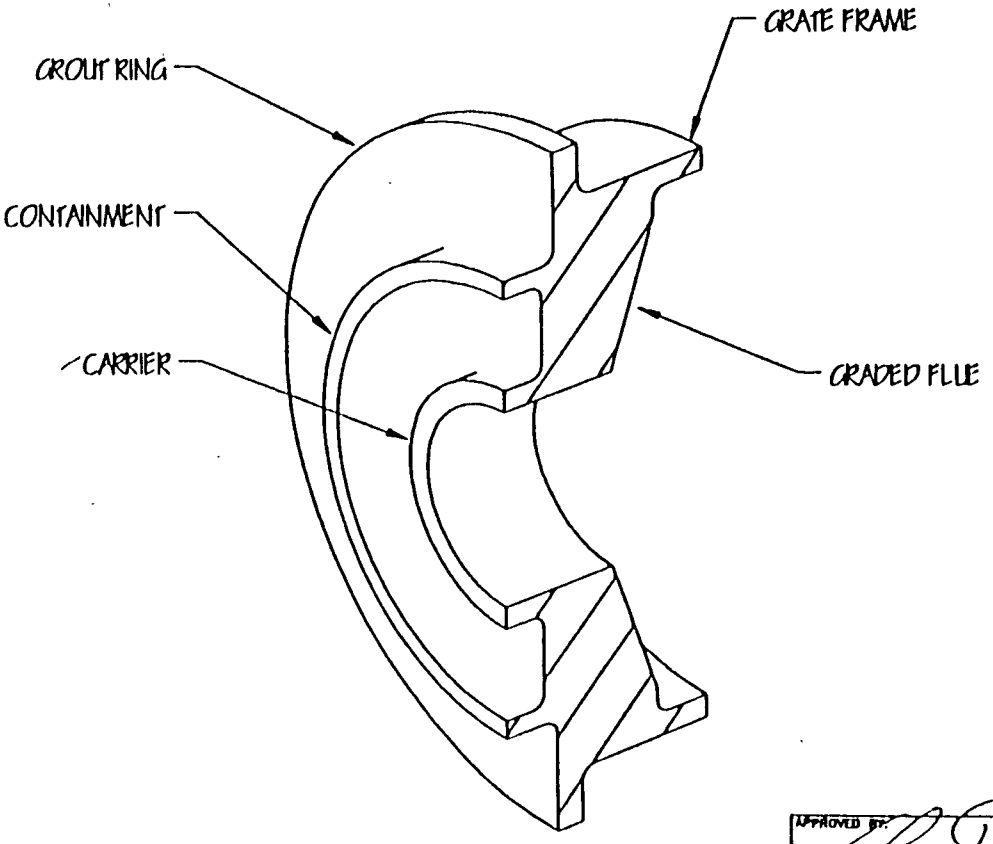

THIS DRAWING/DESIGN PROVIDED BY AND PROPERTY OF FLUID CONTROLS INC. IT IS INTENDED FOR MANUFACTURE, INSTALLATION AND IDENTIFICATION USES OF PRODUCT DEPICTED AND SHALL NOT BE CIRCULATED OR REPRODUCED WITHOUT SPECIFIC PERMISSION FROM MANAGMENT OF FLUID CONTROLS INC. ALL RIGHTS RESERVED

DRAWING NUMBER OR NAME: DRNFTC 23

APPROVED BY: SUBMITTAL

DIMENSIONS IN INCHES UNLESS OTHERWISE NOTED
LINEAR TOLERANCE = 1/4"
ANGULAR TOLERANCE = 2

SCALE:

DO NOT SCALE DRAWING

CUSTOMER

ORDER / QUOTE #

LOCATION #

FLUID CONTROLS INCORPORATED

DRAWN BY: DATE: CHECKED BY: DATE:

FLUID-LOK DRAIN FORCE TRANSFER COUPLING DETAIL

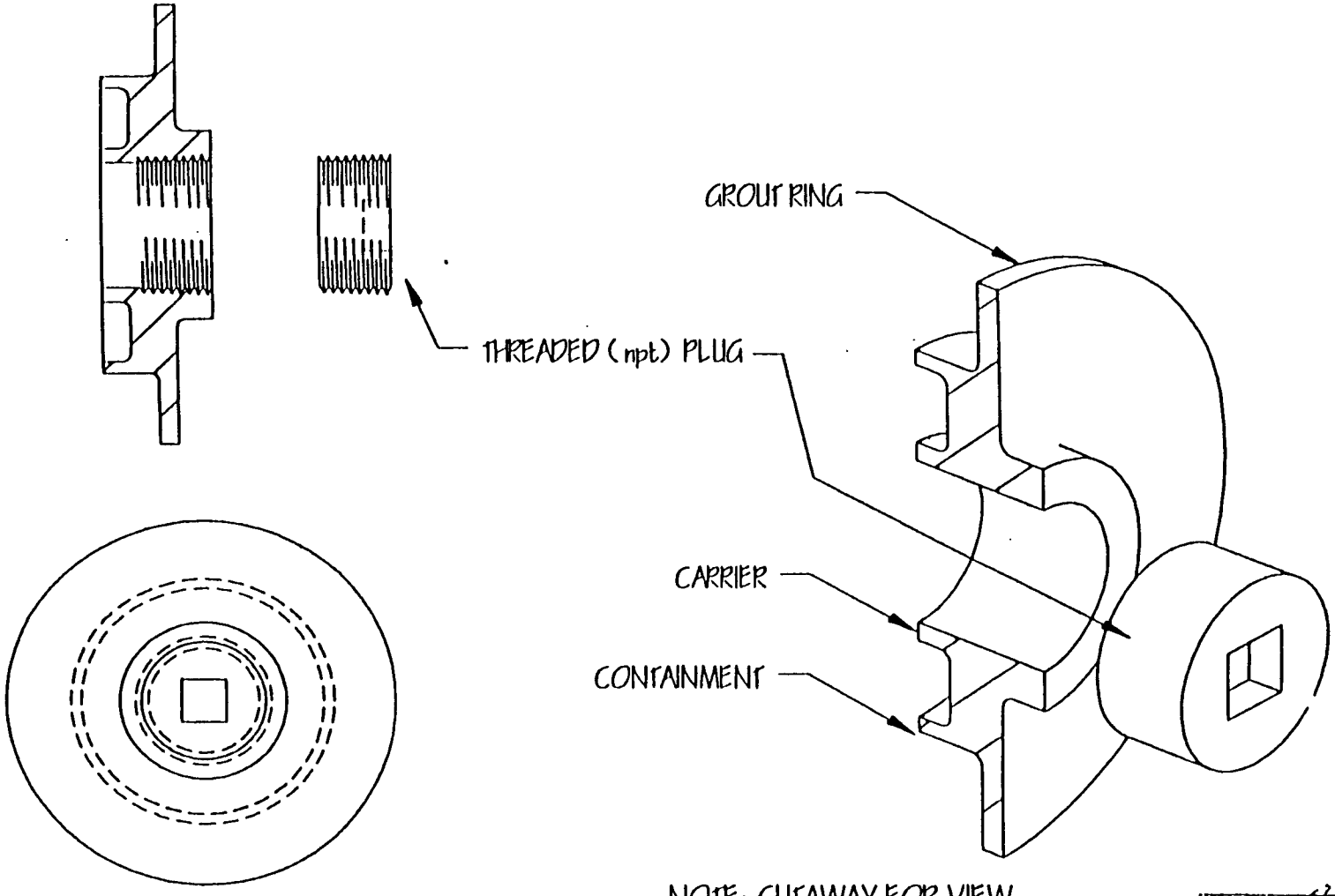

NOTE: CUTAWAY FOR VIEW

THIS DRAWING/DESIGN PROVIDED BY AND PROPERTY OF "FLUID CONTROLS INC." IT IS INTENDED FOR MANUFACTURE, INSTALLATION AND IDENTIFICATION USES OF PRODUCT DEPICTED AND SHALL NOT BE CIRCULATED OR REPRODUCED WITHOUT SPECIFIC PERMISSION FROM MANAGEMENT OF "FLUID CONTROLS INC." ALL RIGHTS RESERVED

APPROVED BY: SUBMITTAL

DRAWING NUMBER OR NAME: 00FTCY2 B

DIMENSIONS IN INCHES UNLESS OTHERWISE NOTED
LINEAR TOLERANCE = 1/4"
ANGULAR TOLERANCE = 2

SCALE:

DO NOT SCALE DRAWING

CUSTOMER

ORDER / QUOTE #

LOCATION:

FLUID CONTROLS INCORPORATED

DRAWN BY: Simi Ho | DATE: 8/20/91 | CHECKED BY: | DATE:

FCI CENTRALIZERS FOR DUAL CONTAINED PIPING

KEYHOLE CENTRALIZER

APPLIED TO MIDDLE AREAS OF LENGTH PIPE THAT IS TO HAVE LEAK DETECTION CABLE INSTALLED

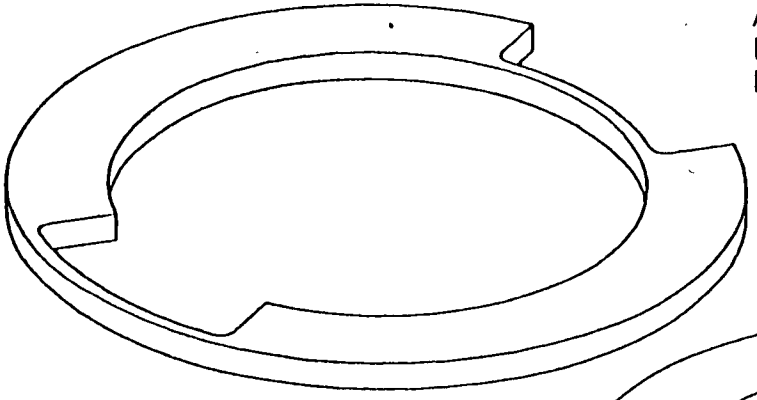

NOTE:

ARCH ADDED TO SUPPLY SUPPORT AND ALIGN LEAK DETECTION CABLE (without snagging)

NOTE:

DESIGNED TO BE STONG SIMPLE AND VERSATILE.

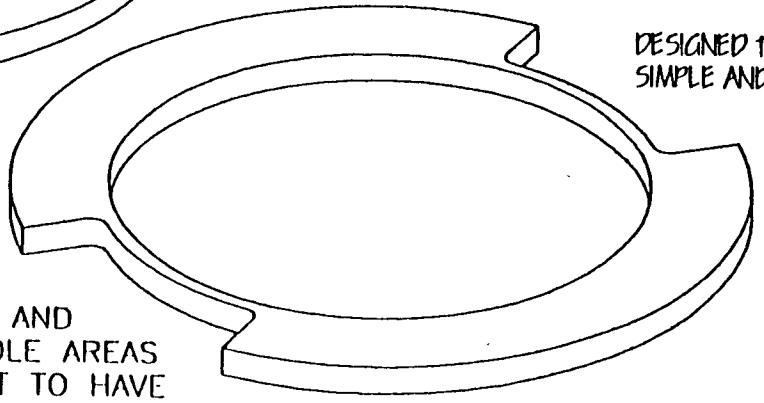

REGULAR CENTRALIZER

APPLIED TO FITTINGS AND PIPE ENDS AND MIDDLE AREAS OF PIPE THAT IS NOT TO HAVE LEAK DETECTION CABLE INSTALLED

THIS DRAWING\DESIGN PROVIDED BY AND PROPERTY OF 'FLUID CONTROLS INC.' IT IS INTENDED FOR MANUFACTURE, INSTALLATION AND IDENTIFICATION USES OF PRODUCT DEPICTED AND SHALL NOT BE CIRCULATED OR REPRODUCED WITHOUT SPECIFIC PERMISSION FROM MANAGEMENT OF 'FLUID CONTROLS INC.' ALL RIGHTS RESERVED

APPROVED BY:

SUBMITTAL

DRAWING NUMBER OR NAME: CM13

DIMENSIONS IN INCHES UNLESS OTHERWISE NOTED
LINEAR TOLERANCE = 1/4"
ANGULAR TOLERANCE = 2

SCALE:

DO NOT SCALE DRAWING

CUSTOMER
COMPANY NAME

ORDER / QUOTE #
NUMBER OR NAME

LOCATION :
ADDRESS
ADDRESS

FLUID CONTROLS INCORPORATED

DRAWN BY: | DATE: 2/13/01 | CHECKED BY: | DATE:

Bill Of Materials

MH	QTY	UNITS	DESCRIPTION	CLASS	SIZE	/ DWG #
1	1	ea.	CAP , THREADED , PVC			
2	1	ea.	RISER , HDPE M1000 PIPE			
3	1	ea.	CONTAINMENT , HDPE M1000 PIPE			
4	1	ea.	CARRIER , HDPE M1000 PIPE			
5	2	ea.	CENTRALIZERS			
6	1	ea.	ELBOW , HDPE MOLDED			
7	1	ea.	CROSSOVER , HDPE M1000 PIPE			
8	1	ea.	LEAKAGE COLLECTION SUMP			
9	1	ea.	FLANGE ADAPTER / STUBEND			
10	1	ea.	FLANGE BACK-UP RING			
11	1	ea.	FORCE TRANSFER COUPLING TYPE "C"			

END TERMINATION WITH MANUAL LEAK DETECTION SAMPLE PORT

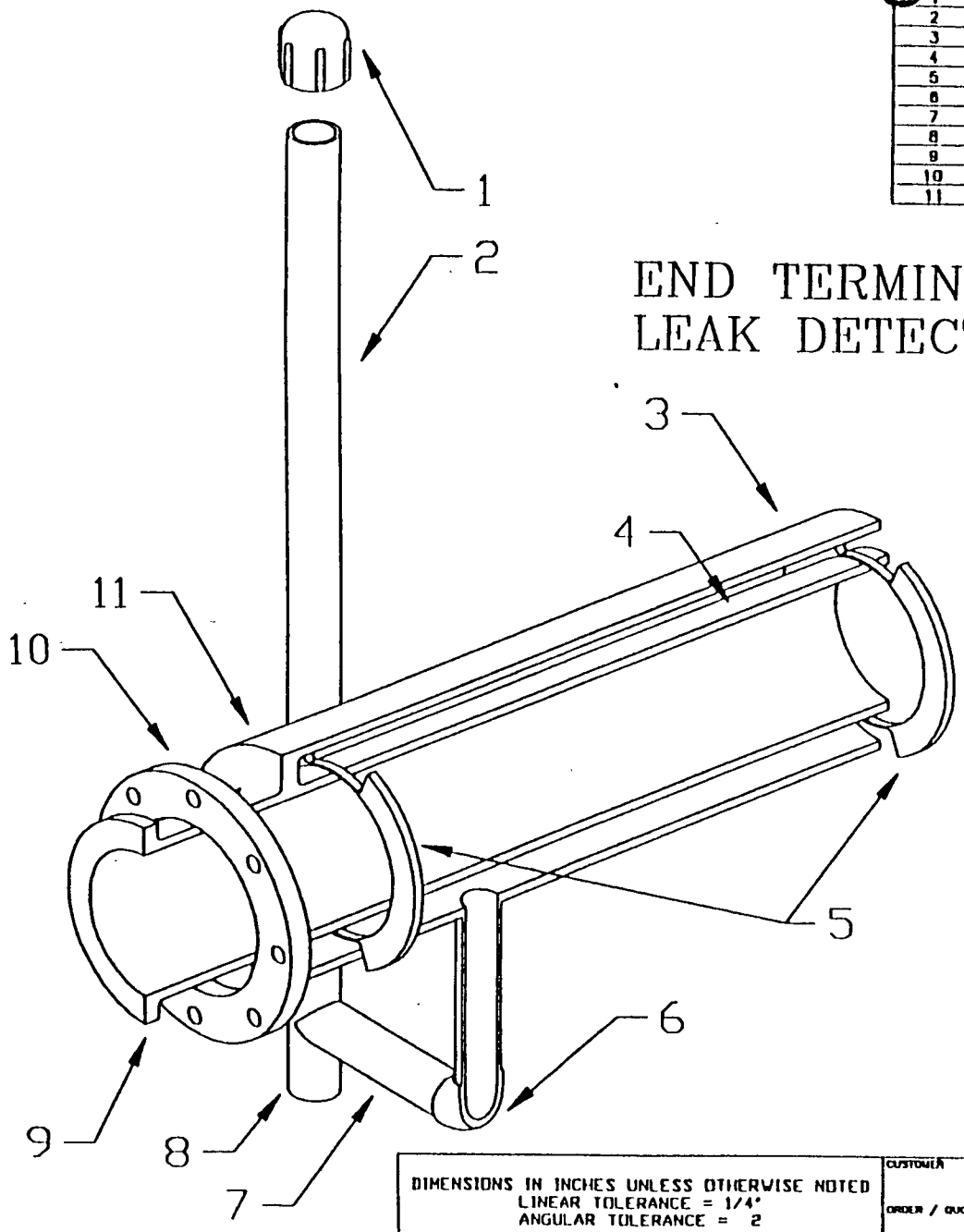

NOTE: Cutaway for inside view

THIS DRAWING/DESIGN PROVIDED BY AND PROPERTY OF 'FLUID CONTROLS INC.' IT IS INTENDED FOR MANUFACTURE , INSTALLATION AND IDENTIFICATION USES OF PRODUCT DEPICTED AND SHALL NOT BE CIRCULATED OR REPRODUCED WITHOUT SPECIFIC PERMISSION FROM MANAGEMENT OF 'FLUID CONTROLS INC.' ALL RIGHTS RESERVED

APPROVED BY:

SUBMITTAL

DRAWING NUMBER OR NAME: Pat Smith

DIMENSIONS IN INCHES UNLESS OTHERWISE NOTED
LINEAR TOLERANCE = 1/4"
ANGULAR TOLERANCE = 2

SCALE:

DO NOT SCALE DRAWING

CUSTOMER

ORDER / QUOTE #

LOCATION :

FLUID CONTROLS INCORPORATED

DRAWN BY: Smith DATE: 2/23/98 CHECKED BY: DATE:

END TERMINATION WITH CONTAINMENT ACCESS PORT

Bill Of Materials

ITEM #	QTY	UNITS	DESCRIPTION	CLASS	SIZE	PART / DWG #
1	1	ea.	BLIND FLANGE , HDPE			
2	1	ea.	FLANGE ADAPTER / STUBEND , HDPE			
3	1	ea.	FLANGE BACK-UP RING			
4	1	ea.	FORCE TRANSFER COUPLING TYPE "C"			
5	1	ea.	FLANGE BACK-UP RING			
6	1	ea.	FLANGE ADAPTER / STUBEND			
7	1	ea.	CONTAINMENT , HDPE M1000 PIPE			
8	1	ea.	CARRIER , HDPE M1000 PIPE			
9	2	ea.	CENTRALIZERS			

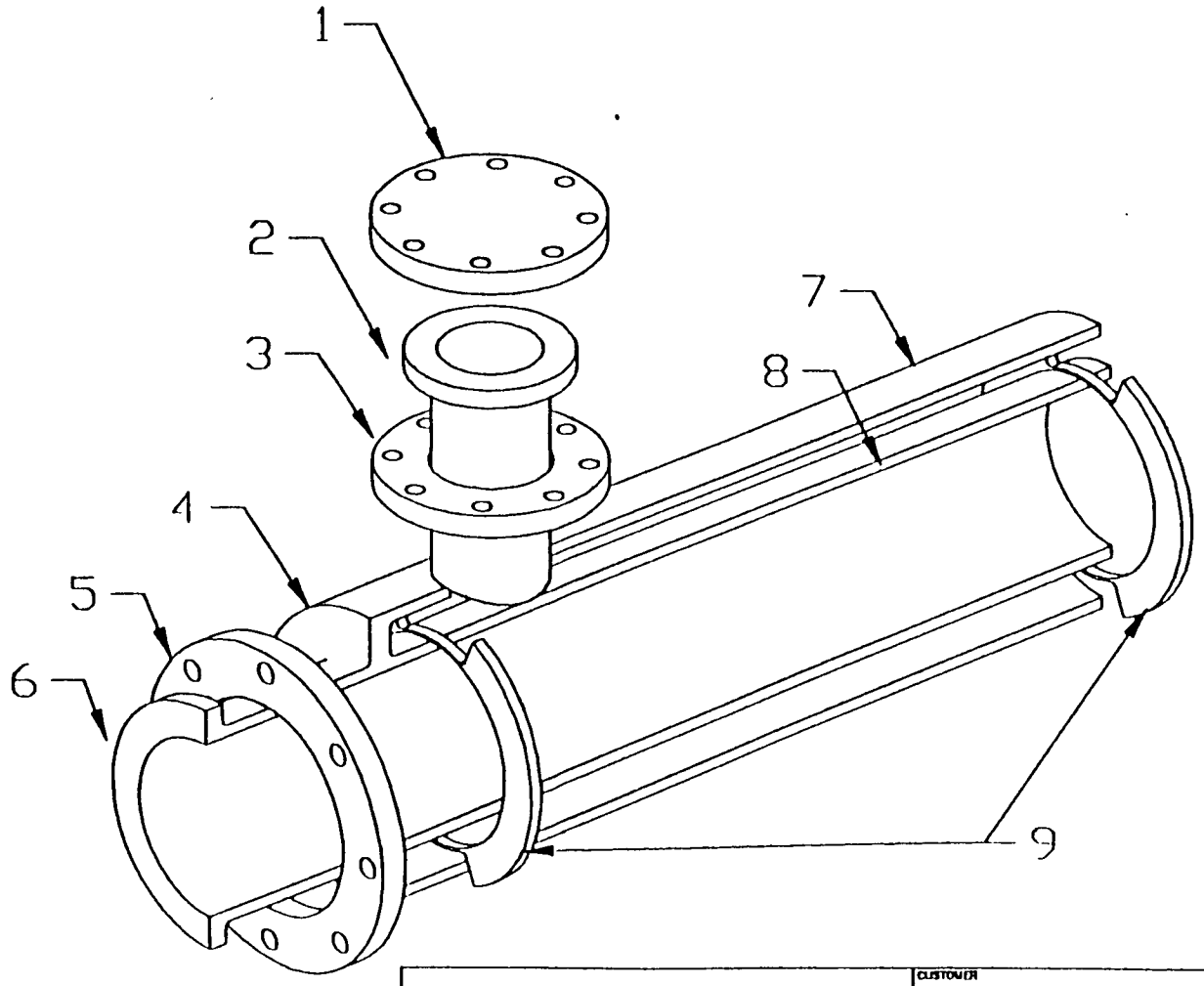

THIS DRAWING/DESIGN PROVIDED BY AND PROPERTY OF 'FLUID CONTROLS INC.' IT IS INTENDED FOR MANUFACTURE, INSTALLATION AND IDENTIFICATION USES OF PRODUCT DEPICTED AND SHALL NOT BE CIRCULATED OR REPRODUCED WITHOUT SPECIFIC PERMISSION FROM MANAGEMENT OF 'FLUID CONTROLS INC.' ALL RIGHTS RESERVED

APPROVED BY:

SUBMITTAL

DRAWING NUMBER OR NAME: PRT AXS

DIMENSIONS IN INCHES UNLESS OTHERWISE NOTED
LINEAR TOLERANCE = 1/4"
ANGULAR TOLERANCE = 2

SCALE:

CUSTOMER

ORDER / QUOTE #

LOCATION :

FLUID CONTROLS INCORPORATED

ITEMS	Q'TY	UNITS	DESCRIPTION	CLASS	SIZE	PART /
1	1	ea.	JUMPER CABLE , LENGTHS or BULK			
2	1	ea.	JUNCTION BOX MOUNTING NUT			
3	2	ea.	COMPRESSION ADAPTERS			
4	1	ea.	COMPRESSION GROMMET			
5	1	ea.	SEAL GASKET			
6	1	ea.	COMPRESSION SCREWS			
7	1	ea.	BLIND FLANGE			
8	1	ea.	FLANGE BACK-UP RING			
9	1	ea.	FLANGE ADAPTER / STUBEND			

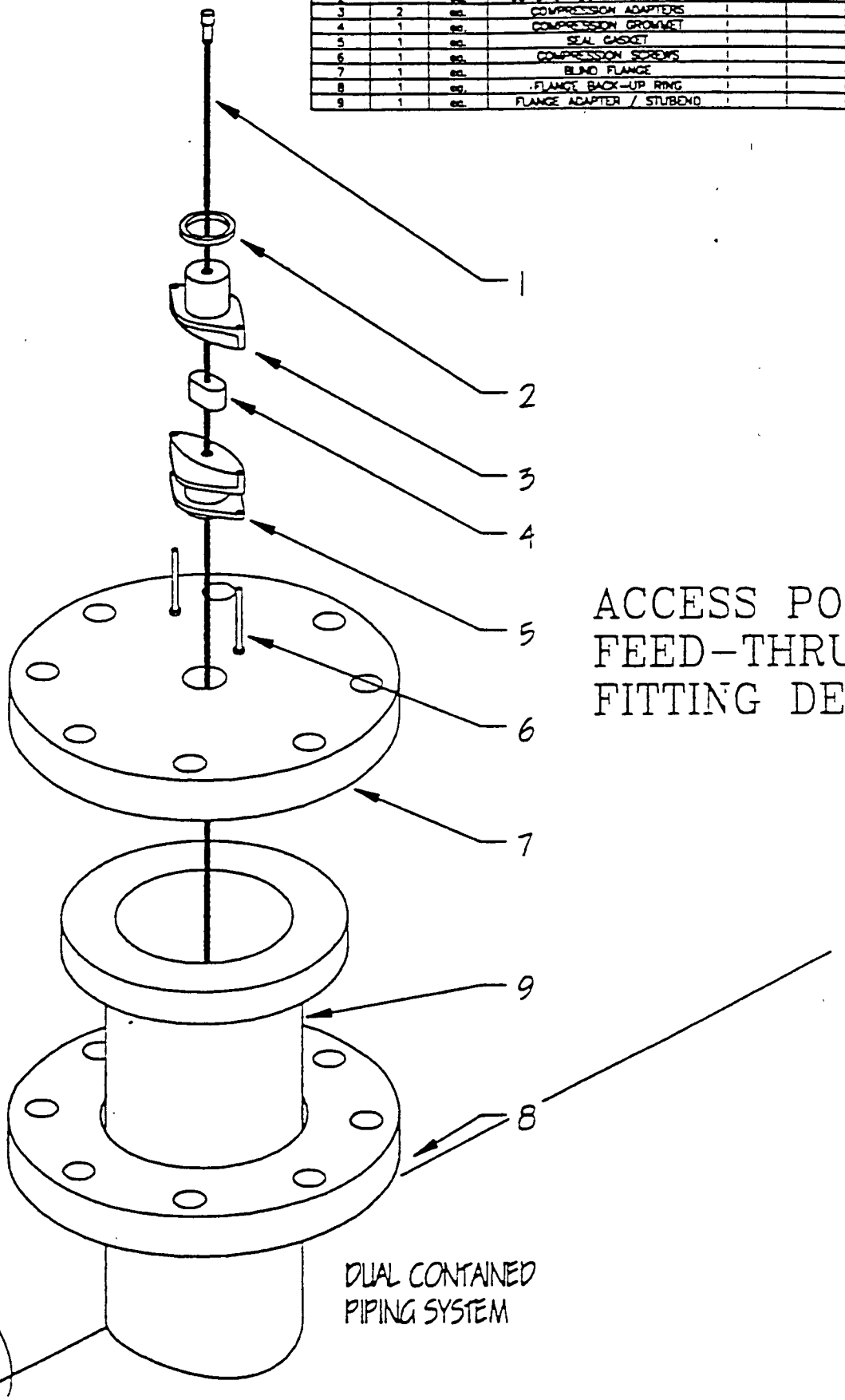

ACCESS PORT FEED-THRU FITTING DETAIL

DIMENSIONS IN INCHES UNLESS OTHERWISE NOTED
LINEAR TOLERANCE = 1/4"
ANGULAR TOLERANCE = 2
SCALE:
DO NOT SCALE DRAWING

DRAWN / QUOTE /
LOCATION :

DRAWN
DATE
DESIGNED
DATE

FLUID CONTROLS INCORPORATED

SUBMITTAL

DRAWING NUMBER OR NAME
PRTFEED

THIS DRAWING\DESIGN PROVIDED BY AND PROPERTY OF "FLUID CONTROLS INC."
IT IS INTENDED FOR MANUFACTURE , INSTALLATION AND IDENTIFICATION USES
OF PRODUCT DEPICTED AND SHALL NOT BE CIRCULATED OR REPRODUCED
WITHOUT SPECIFIC PERMISSION FROM MANAGEMENT OF "FLUID CONTROLS INC."
ALL RIGHTS RESERVED

CLEANOUT PORT TYPICAL APPLICATION EXAMPLE

ITEM	QTY	UNITS	DESCRIPTION	CLASS	SI	T / DWG #
1	1	ea.	THREADED PLUG, HDPE SHEET, MACH			
2	1	ea.	CLEANOUT FTG, HDPE SHEET, MACH.			
3	1	ea.	GROUT RING, INTEGRAL TO FTG			
4	1	ea.	DC ELBOW, 1/4 BEND, HDPE, FAB'D			
5	1	ea.	DC WYE, HDPE, FAB'D			
6	1	ea.	DC ELBOW, 1/8 BEND, HDPE, FAB'D			
7	typical	ea.	CENTRALIZER, HDPE SHEET, MACH.			
8	1	ea.	CARRIER, CENTERED THROUGHOUT			
9	1	ea.	GUSSET, HDPE SHEET			

* NOTE COMMON APPLICATION SHOWN, CUSTOM APPLICATIONS AND CONFIGURATIONS AVAILABLE : CONSULT SALES PERSON

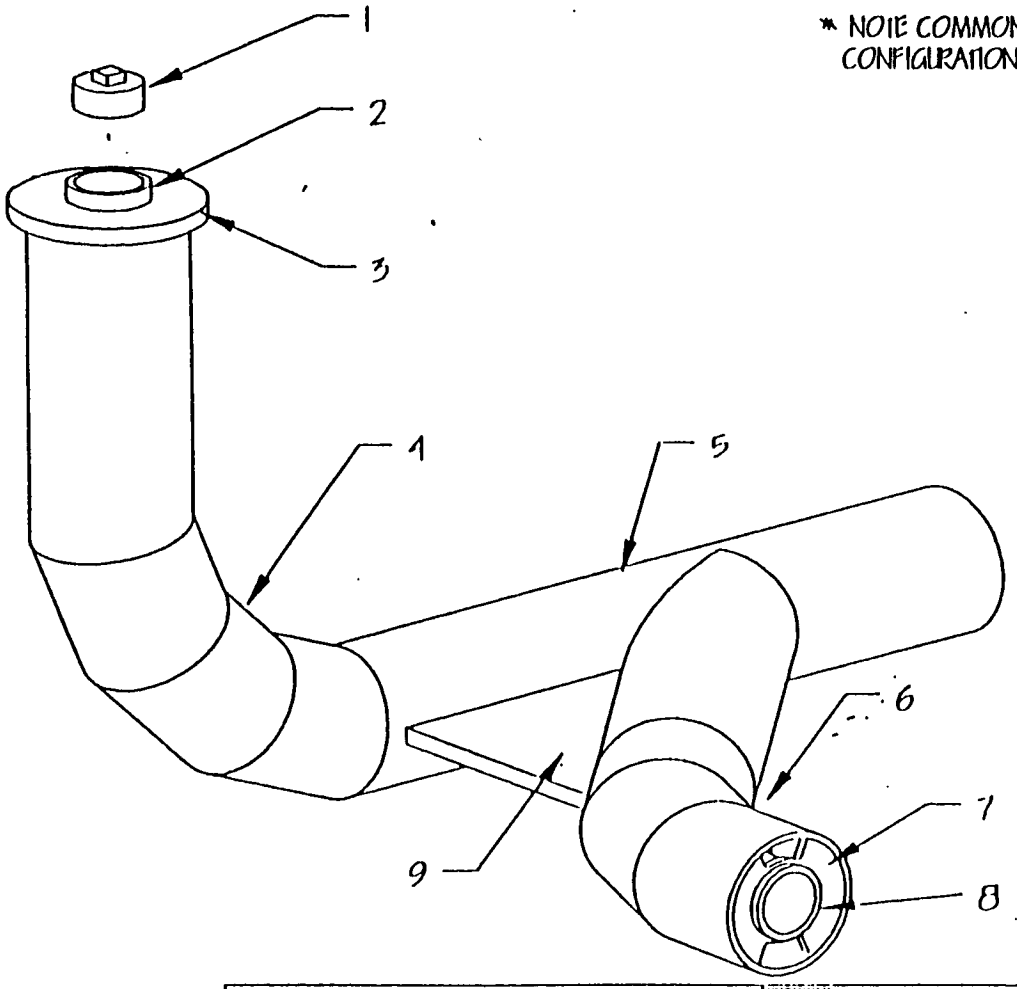

THIS DRAWING/DESIGN PROVIDED BY AND PROPERTY OF 'FLUID CONTROLS INC.' IT IS INTENDED FOR MANUFACTURE, INSTALLATION AND IDENTIFICATION USES OF PRODUCT DEPICTED AND SHALL NOT BE CIRCULATED OR REPRODUCED WITHOUT SPECIFIC PERMISSION FROM MANAGEMENT OF 'FLUID CONTROLS INC.' ALL RIGHTS RESERVED

APPROVED BY

SUBMITTAL

COASY 22

DIMENSIONS IN INCHES UNLESS OTHERWISE NOTED
LINEAR TOLERANCE = 1/4"
ANGULAR TOLERANCE = 2

SCALE:

DO NOT SCALE DRAWING

CUSTOMER

ORDER / QUOTE #

LOCATION #

FLUID CONTROLS INCORPORATED

DRAWN BY

DATE

CHECKED BY

SIZE

FLUID CONTROLS INCORPORATED
WORLD LEADERS IN PLASTIC PIPING & FABRICATION
1-800-462-0860

Corporate Office
5 Stanwood Blvd.
.tsville, AL 35811
PH. (205) 851-6000
FAX (205) 852-6005

Branch Office
3035 Directors Row, Suite 202
Memphis, TN 38131
(901) 348-8429
FAX (901) 348-8429

Branch Office
2751 Halls Mill Rd.
Mobile, AL 36606
(334) 479-4800
FAX (334) 479-5900

JOB 54DCMH
SHEET NO. 1 OF 1
CALCULATED BY AGE DATE
DRAWN BY AGE DATE
SCALE NTS

54" SDR 32.5 HDPE MANHOLE (OPTION FOR DUAL CONTAINED MANHOLES)

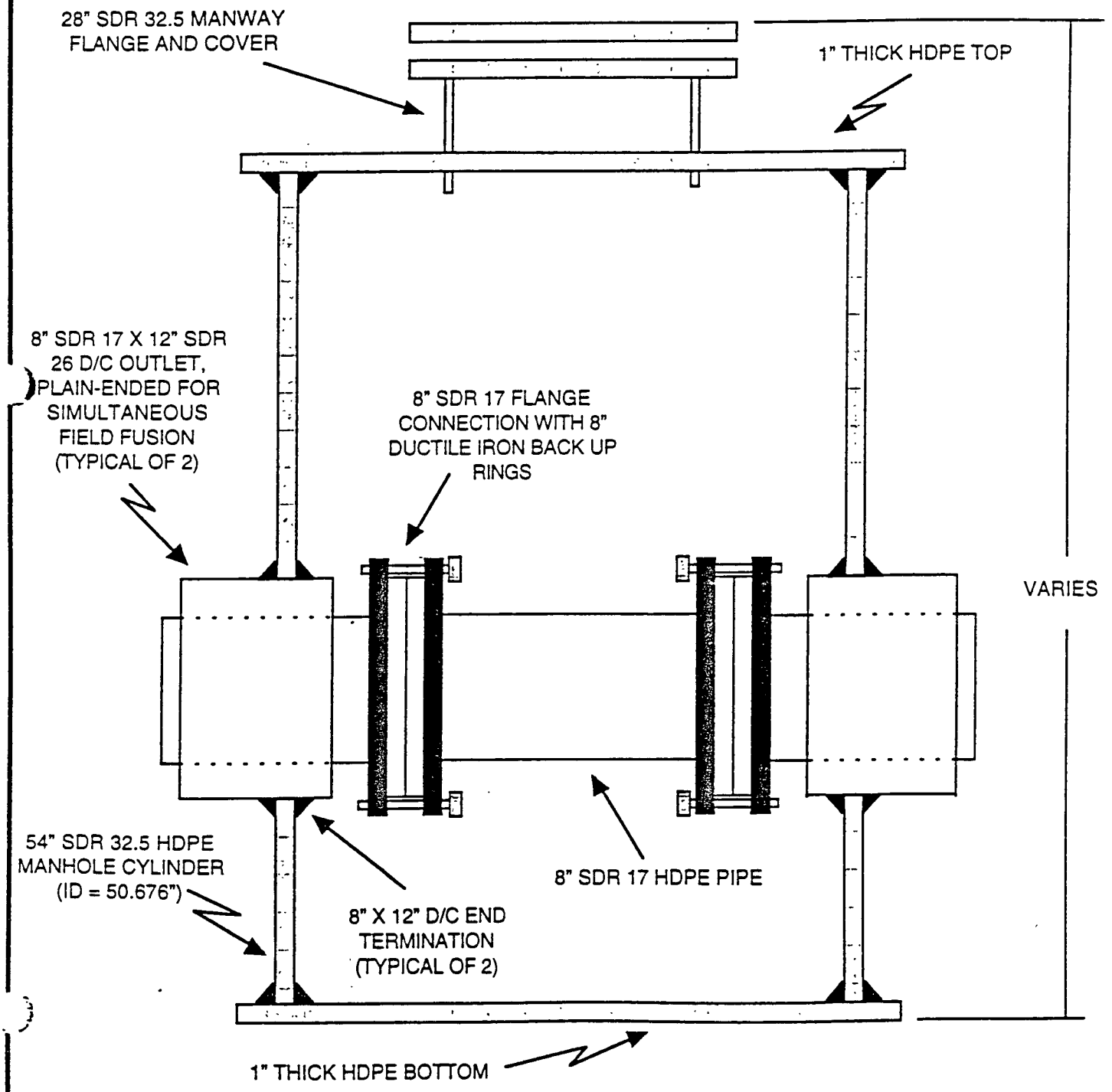

FLUID CONTROLS INCORPORATED
WORLD LEADERS IN PLASTIC PIPING & FABRICATION
1-800-462-0860

Corporate Office
5 Stanwood Blvd.
Huntsville, AL 35811
PH. (205) 851-6000
FAX (205) 852-6005

Branch Office
3035 Directors Row, Suite 202
Memphis, TN 38131
(901) 348-8429
FAX (901) 348-8429

Branch Office
2751 Halls Mill Rd.
Mobile, AL 36606
(334) 479-4800
FAX (334) 479-5900

JOB DCHDPEMH
SHEET NO. 1 OF 1
CALCULATED BY AGE DATE
DRAWN BY AGE DATE
SCALE NTS

DUAL CONTAINED HDPE MANHOLE

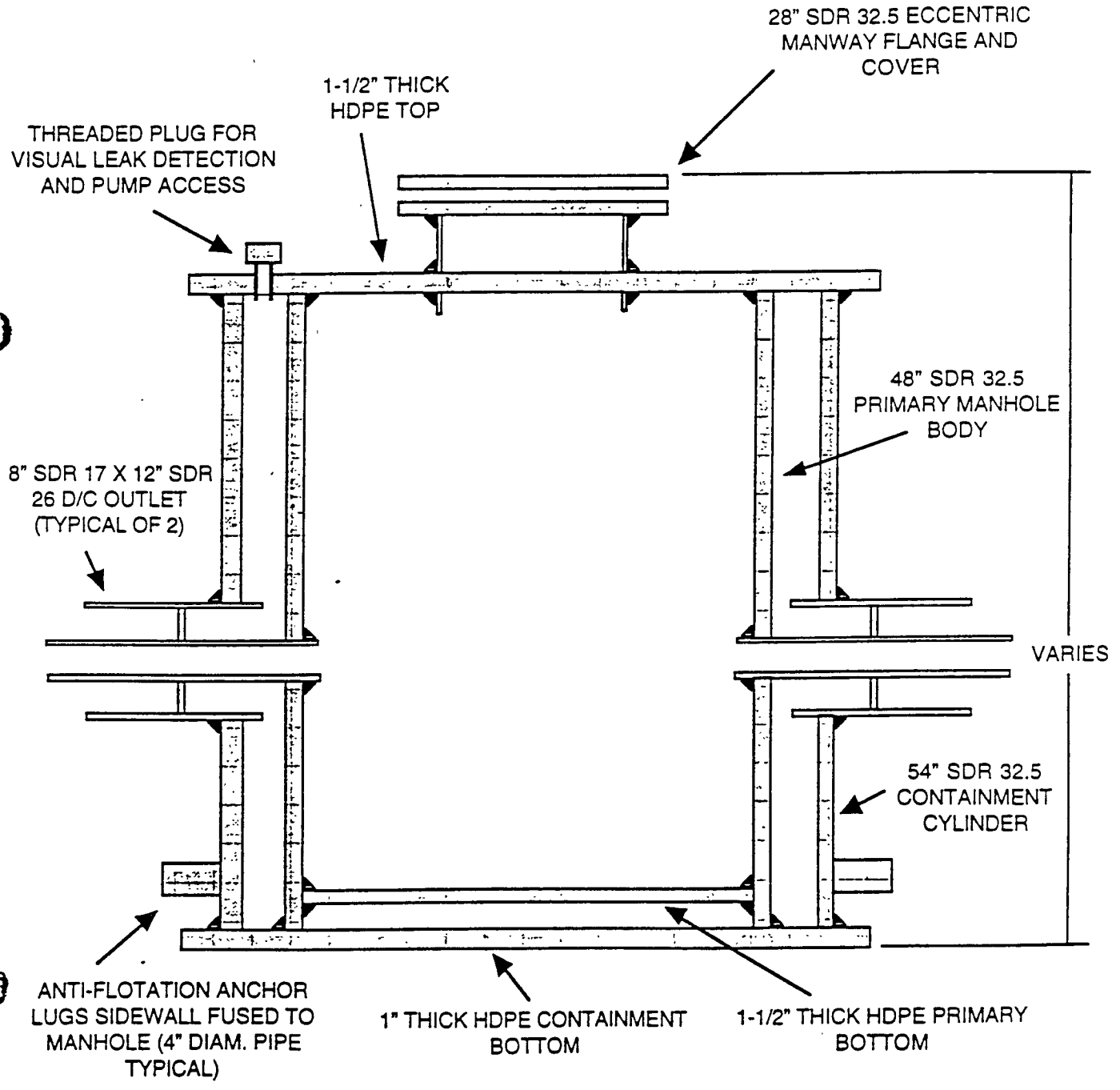

FLUID CONTROLS INCORPORATED
WORLD LEADERS IN PLASTIC PIPING & FABRICATION
1-800-462-0860

Corporate Office
5 Stanwood Blvd.
Huntsville, AL 35811
PH. (205) 851-6000
FAX (205) 852-6005

Branch Office
3035 Directors Row, Suite 202
Memphis, TN 38131
(901) 348-8429
FAX (901) 348-8429

Branch Office
2751 Halls Mill Rd.
Mobile, AL 36606
(334) 479-4800
FAX (334) 479-5900

JOB MHEXSPLICE
SHEET NO. 1 OF 1
CALCULATED BY AGE DATE
DRAWN BY AGE DATE
SCALE NTS

MANHOLE EXTENSION SPLICE

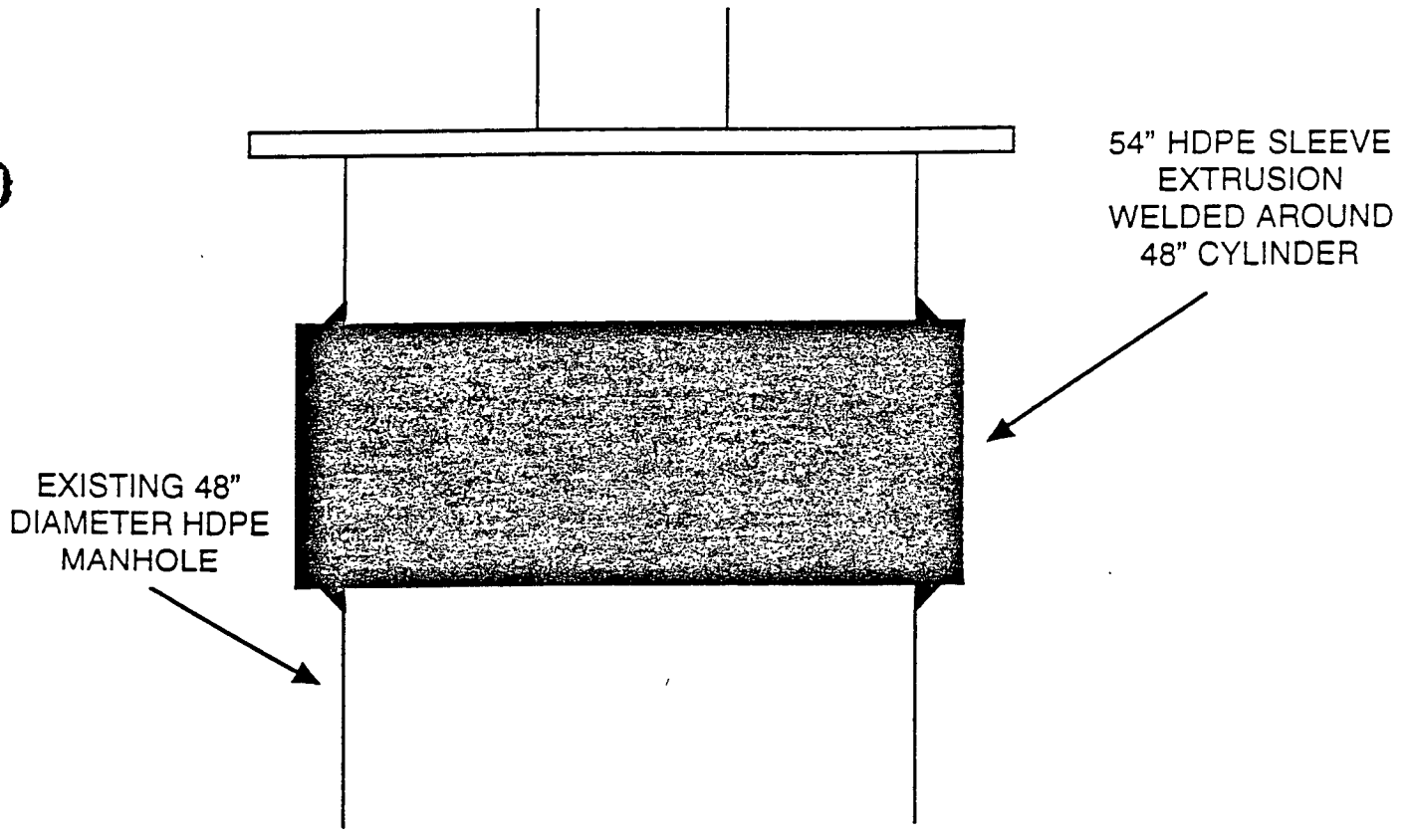

Bill Of Materials

ITEM #	QTY	UNITS	DESCRIPTION	CLASS	SIZE	PART #	INVC #
1	20	ft.	MANWAY, PE/HDPE/M1000	SDR11.0	36" pipe		
2	1	ea.	INSPECTION CAP, Permeable/PVC	ROTHO	8"		
3	20	ft.	INSPECTION TUBE, PE/HDPE/M1000	SDR11	8" pipe		
4	37	ft(ft)	MANHOLE TOP, HDPE SHEET		3/8 dia		
5	8	ea.	ANNULUS CONTAINING SLATS		1 dia		
6	14	ft	CARRIER CYLINDER, PERMADRAIN PIPE	STD	8"		
7	3	ea.	DUAL CONTAINED OUTLETS		14-18"		
8	1	ea.	DUAL CONTAINED OUTLET		18-12"		
9	1	ea.	DUAL CONTAINED OUTLET		14-10"		
10	21	ft(ft)	INTER-BOTTOM, HDPE SHEET		1/4 dia		
11	21	ft(ft)	CONTAINMENT BOTTOM, HDPE SHEET		1/4 dia		
12	1	ea.	OSHA LADDER, HDPE/FIBERGLASS		14'		

NOTES: Outlets and manway related on elevation view for simplicity.
For orientation of outlets see plan view.
For detailed dimensions and construction details see detail drawing.

ELEV. VIEW

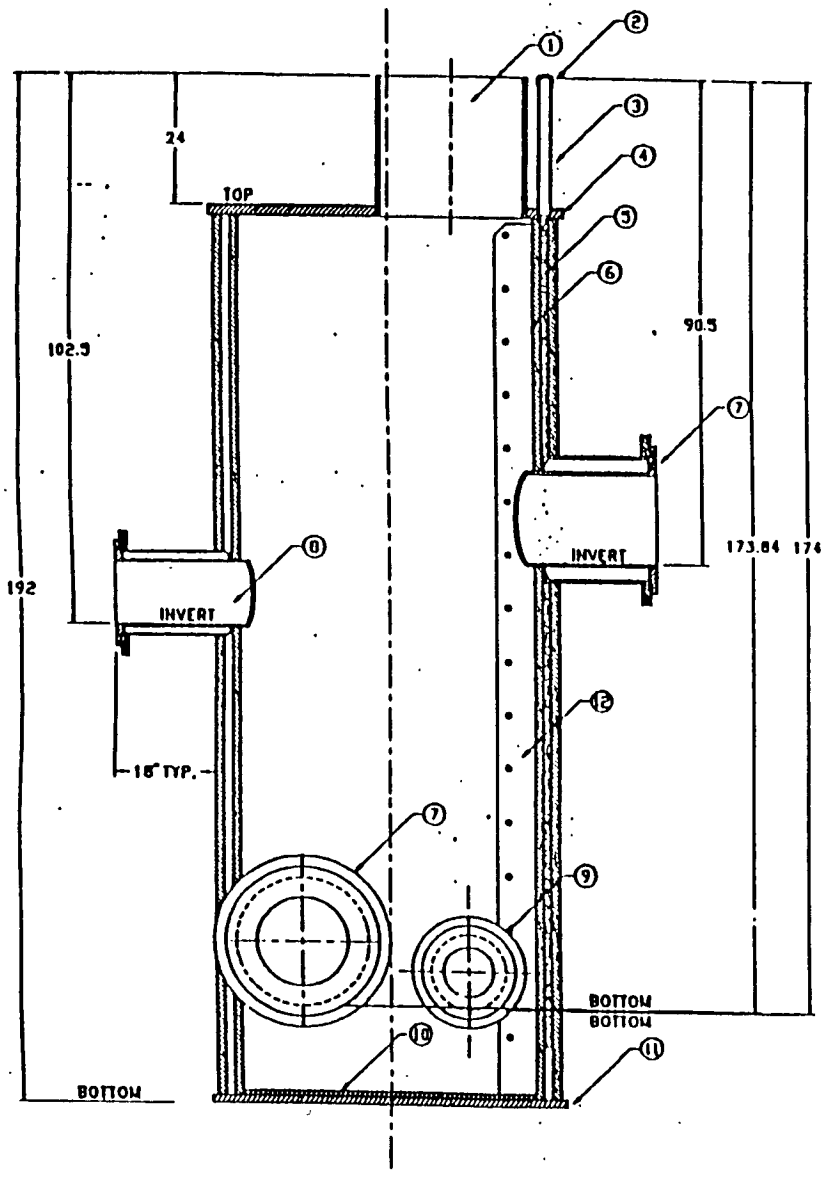

PLAN VIEW

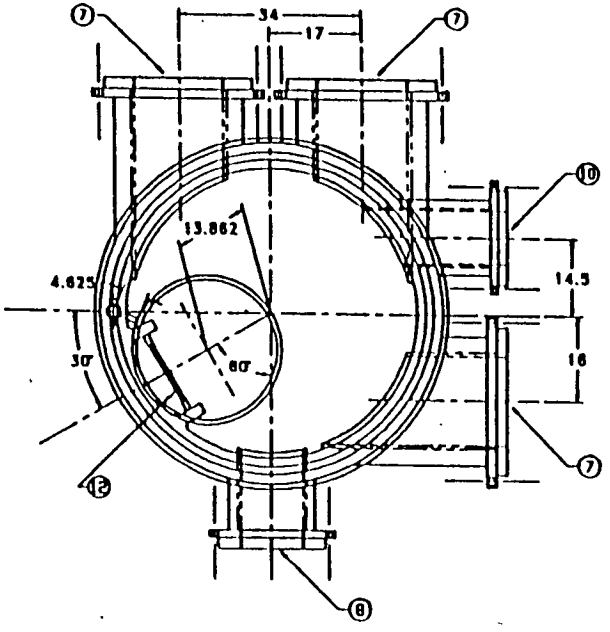

DIMENSIONS IN INCHES UNLESS OTHERWISE NOTED
LINEAR TOLERANCE = 1/4"
ANGULAR TOLERANCE = 2°
SCALE: 1: 24.2
DO NOT SCALE DRAWING

MOTOROLA
52295
52nd ST. FACILITY
PHOENIX, AZ.

SUBMITTAL

FLUID CONTROLS INCORPORATED

Smith

SCALE: NOT TO SCALE

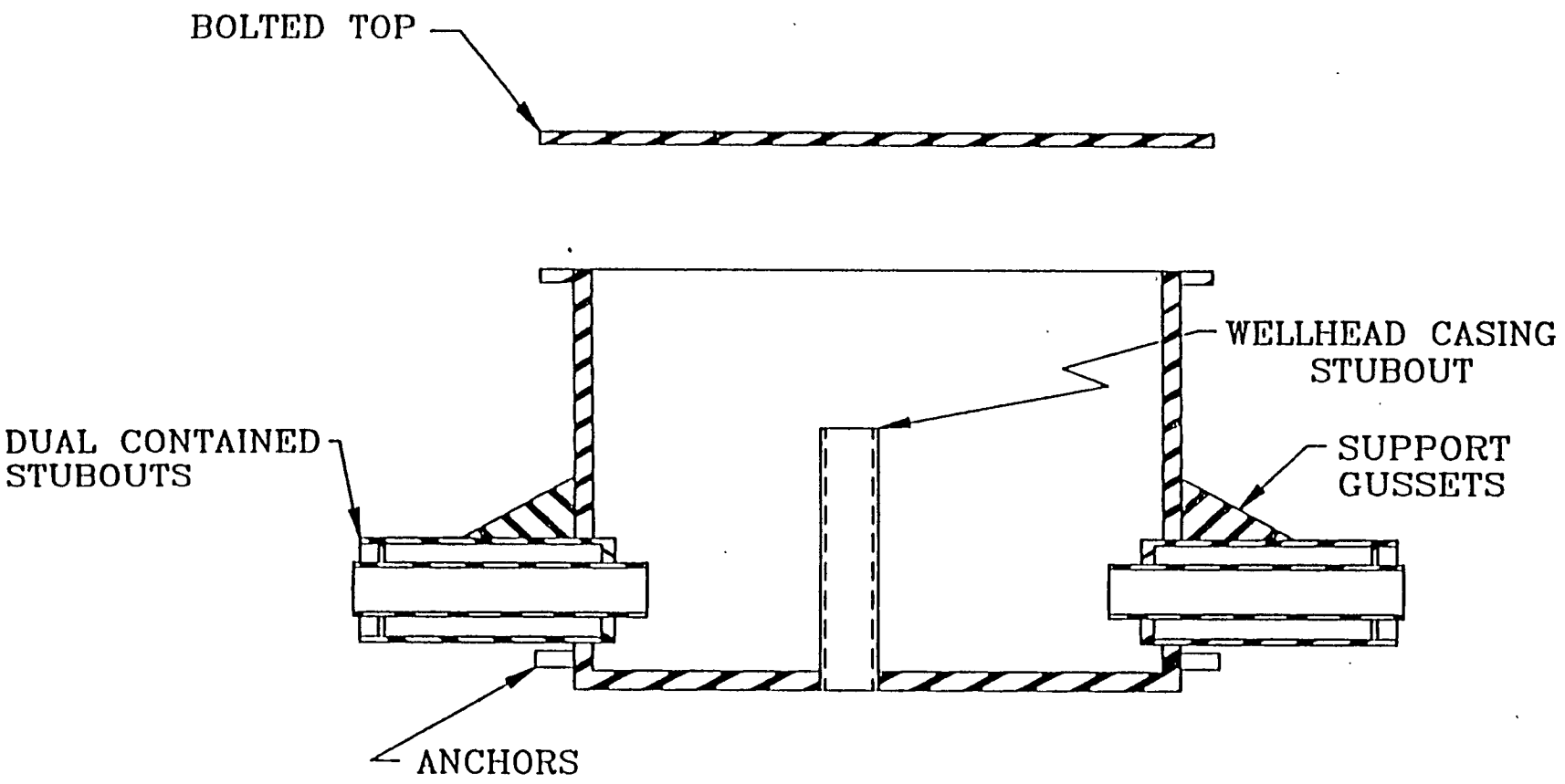

THIS DRAWING/DESIGN PROVIDED BY AND PROPERTY OF 'FLUID CONTROLS INC.' IT IS INTENDED FOR MANUFACTURE, INSTALLATION AND IDENTIFICATION USES OF PRODUCT DEPICTED AND SHALL NOT BE CIRCULATED OR REPRODUCED WITHOUT SPECIFIC PERMISSION FROM MANAGEMENT OF 'FLUID CONTROLS INC.' ALL RIGHTS RESERVED

DRAWING SUBJECT OR TITLE: WELLHEAD

APPROVED FOR: SUBMITTAL

WELLHEAD CASING (MANHOLE)

CUSTOMER

ORDER / QUOTE #

LOCATION #

FLUID CONTROLS INCORPORATED

DRAWN BY: MDA | DATE: 04-27-90 | CHECKED BY: | DWG:

TYPICAL ANCHORED FREQUENT ENTRY MANHOLE WITH DUAL AND SINGLE WALL OUTLETS

- CONSULT SALES PERSON FOR OUTLET COMBINATIONS
- REFER TO STANDARD DUAL CONTAINED PIPE DRAWING FOR DUAL CONTAINMENT DETAILS

Bill Of Materials

ITEM #	QTY	UNITS	DESCRIPTION	CLASS	SIZE	RT / DWG #
1	1	ea.	MANHOLE TOP, HDPE M1000 PIPE			
2	1	ea.	TOP FLANGE RING , HDPE SHEET			
3	12 shown	ea.	GUSSETS , HDPE SHEET			
4	2 shown	ea.	DUAL CONTAINED PIPE , HDPE M1000			
5	2 shown	ea.	FORCE TRANSFER COUPLINGS , HDPE			
6	1	ea.	MANHOLE RISER , HDPE M1000 PIPE			
7	1	ea.	MANHOLE BOTTOM , HDPE SHEET			
8	1 shown	ea.	FLANGE BACK-UP RING			
9	1 shown	ea.	FLANGED OUTLET , HDPE M1000			
10	1	ea.	MANWAY RISER , HDPE M1000 PIPE			
11	1	ea.	FLANGE BACK-UP RING			
12	1	ea.	FLANGE ADPTER / STUBEND , HDPE			
13	1	ea.	BLIND FLANGE , HDPE SHEET			
14	1	ea.	LADDER , OSHA , HDPE/FRP			
15	typical	ea.	EXTRUSION WELDS , TYPICAL FOR BOTTOM AND PENETRATIONS , INSIDE AND OUTSIDE			

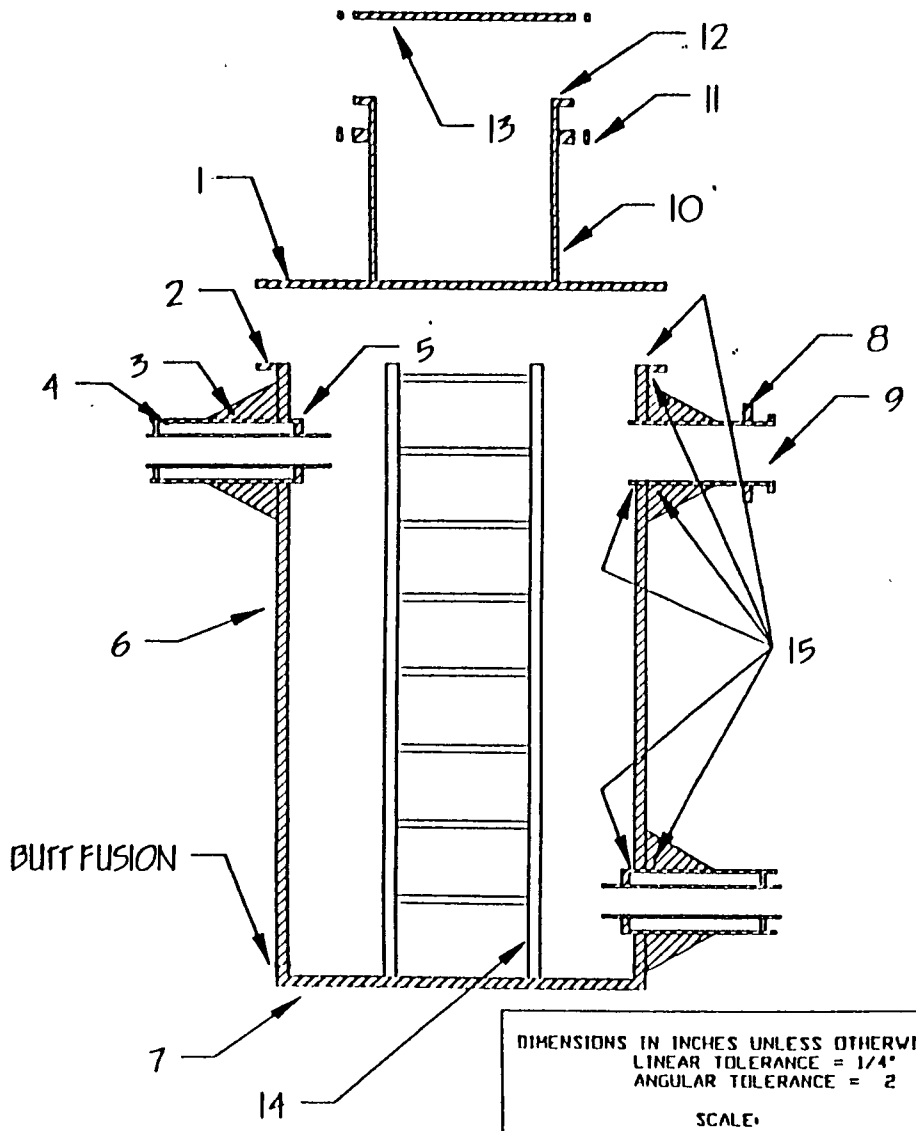

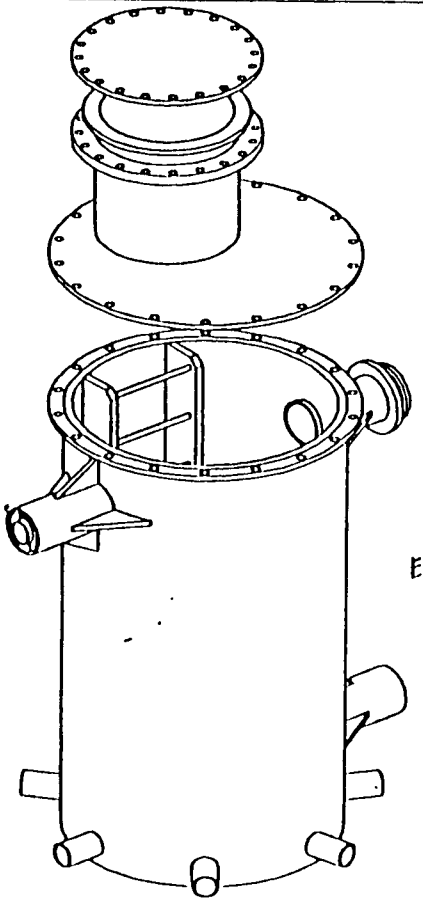

TYPICAL EXTRUSION WELD DETAILS

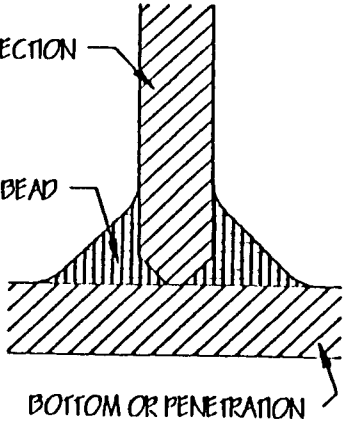

THIS DRAWING\DESIGN PROVIDED BY AND PROPERTY OF 'FLUID CONTROLS INC.' IT IS INTENDED FOR MANUFACTURE, INSTALLATION AND IDENTIFICATION USES OF PRODUCT DEPICTED AND SHALL NOT BE CIRCULATED OR REPRODUCED WITHOUT SPECIFIC PERMISSION FROM MANAGEMENT OF 'FLUID CONTROLS INC.' ALL RIGHTS RESERVED

DRAWING NUMBER OR NAME

APPROVED BY:

SUBMITTAL

DIMENSIONS IN INCHES UNLESS OTHERWISE NOTED
LINEAR TOLERANCE = 1/4"
ANGULAR TOLERANCE = 2

SCALE:

DO NOT SCALE DRAWING

CUSTOMER

ORDER / QUOTE #

LOCATION :

DRAWN BY: Smi

DATE: 8/16/99

CHECKED BY:

DATE:

FLUID CONTROLS INCORPORATED

TYPICAL MANHOLE WITH DUAL CONTAINED AND SINGLE WALL OUTLETS DETAIL

- CONSULT SALES PERSON FOR OUTLET COMBINATIONS
- REFER TO STANDARD DUAL CONTAINED PIPE DRAWING FOR DUAL CONTAINMENT DETAILS

Bill Of Materials

ITEM#	QTY	UNITS	DESCRIPTION	CLASS	SIZE	RT / DWG #
1	1	ea.	MANHOLE TOP, HDPE M1000 PIPE			
2	1	ea.	TOP FLANGE RING , HDPE SHEET			
3	12 shown	ea.	GUSSETS , HDPE SHEET			
4	2 shown	ea.	DUAL CONTAINED PIPE , HDPE M1000			
5	2 shown	ea.	FORCE TRANSFER COUPLINGS , HDPE			
6	1	ea.	MANHOLE RISER , HDPE M1000 PIPE			
7	1	ea.	MANHOLE BOTTOM , HDPE SHEET			
8	1 shown	ea.	FLANGE BACK-UP RING			
9	1 shown	ea.	FLANGED OUTLET , HDPE M1000			

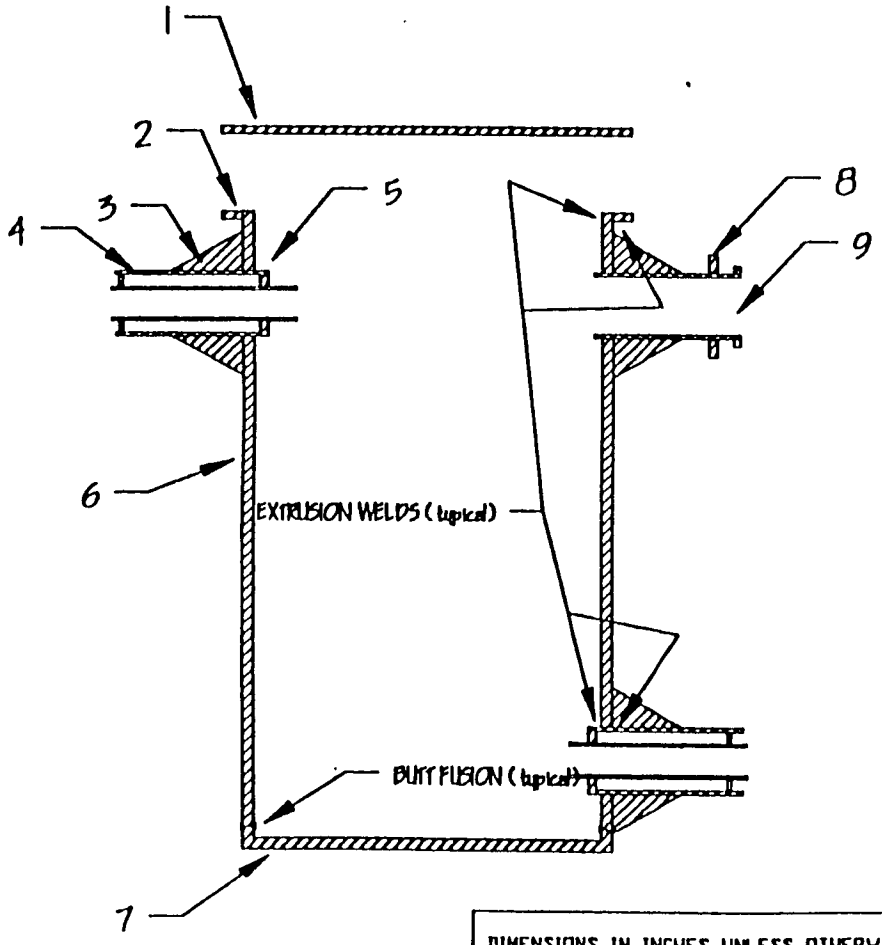

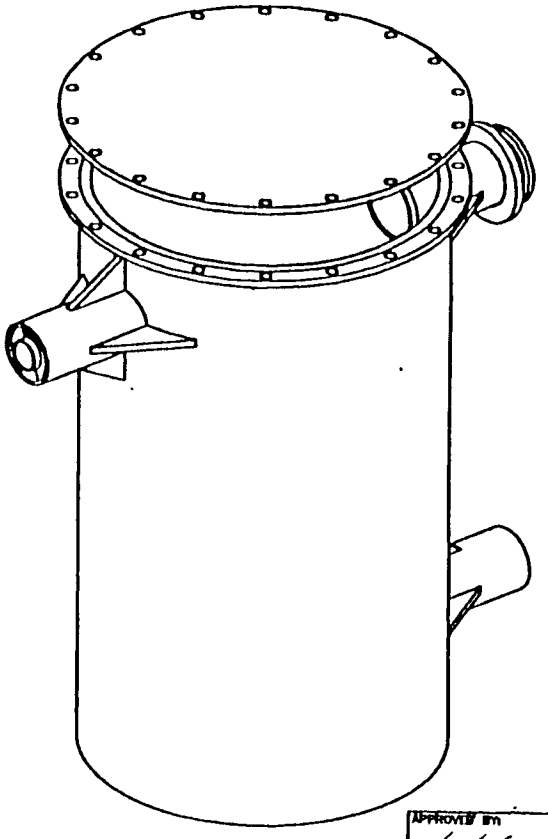

THIS DRAWING/DESIGN PROVIDED BY AND PROPERTY OF 'FLUID CONTROLS INC.' IT IS INTENDED FOR MANUFACTURE, INSTALLATION AND IDENTIFICATION USES OF PRODUCT DEPICTED AND SHALL NOT BE CIRCULATED OR REPRODUCED WITHOUT SPECIFIC PERMISSION FROM MANAGEMENT OF 'FLUID CONTROLS INC.' ALL RIGHTS RESERVED

DRAWING NUMBER OR NAME: MHDCOUT

APPROVED BY:

SUBMITTAL

DIMENSIONS IN INCHES UNLESS OTHERWISE NOTED
LINEAR TOLERANCE = 1/4"
ANGULAR TOLERANCE = 2

SCALE:

DO NOT SCALE DRAWING

CUSTOMER

ORDER / QUOTE #

LOCATION :

FLUID CONTROLS INCORPORATED

DRAWN BY: DATE: CHECKED BY: DATE:

TYPICAL BASIC MANHOLE WITH VARIUOS INLETS/OUTLETS

* CONSULT WITH SALES PERSON FOR OUTLET COMBINATIONS AND ORIENTATION
* CUSTOM CONFIGURATION AVAILABLE

Bill Of Materials

ITEM #	QTY	UNITS	DESCRIPTION	CLASS	SIZE	PART / DWG #
1	1	ea.	MANWAY , HDPE , MOLDED			
2	1	ea.	MANHOLE RISER , HDPE M1000 PIPE			
3	2 shown	ea.	INLETS/OUTLETS , HDPE M1000 PIPE			
4	1	ea.	MANHOLE BOTTOM , HDPE SHEET			
5	typical	ea.	EXTRUSION WELDS , TYPICAL FOR BOTTOM AND PENETRATIONS INSIDE AND OUTSIDE			
6	1	ea.	MANWAY TOP, MOLDED HDPE			

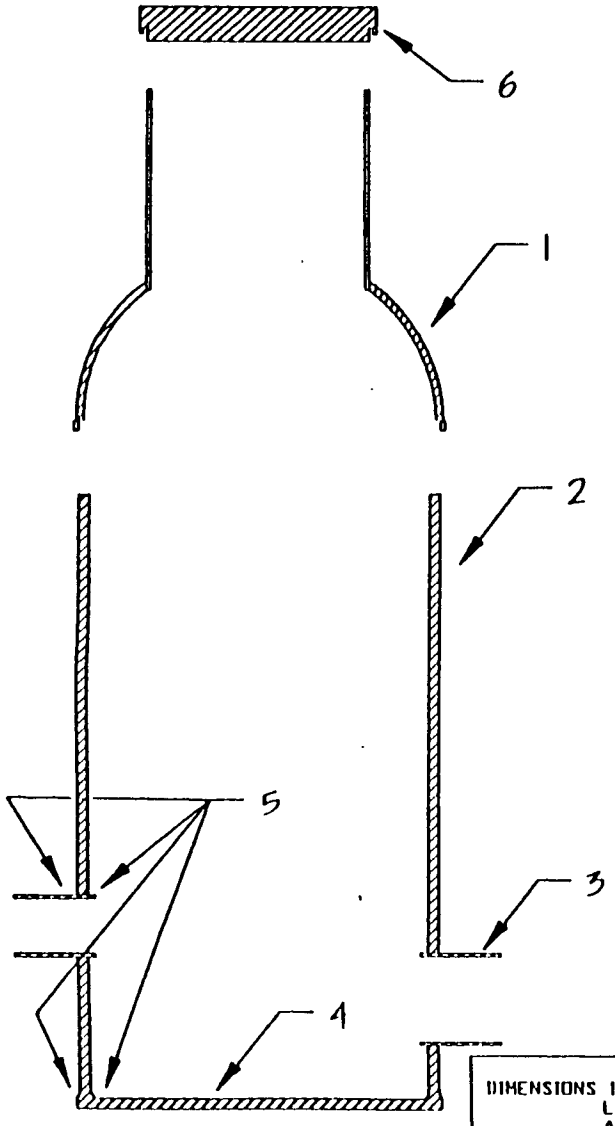

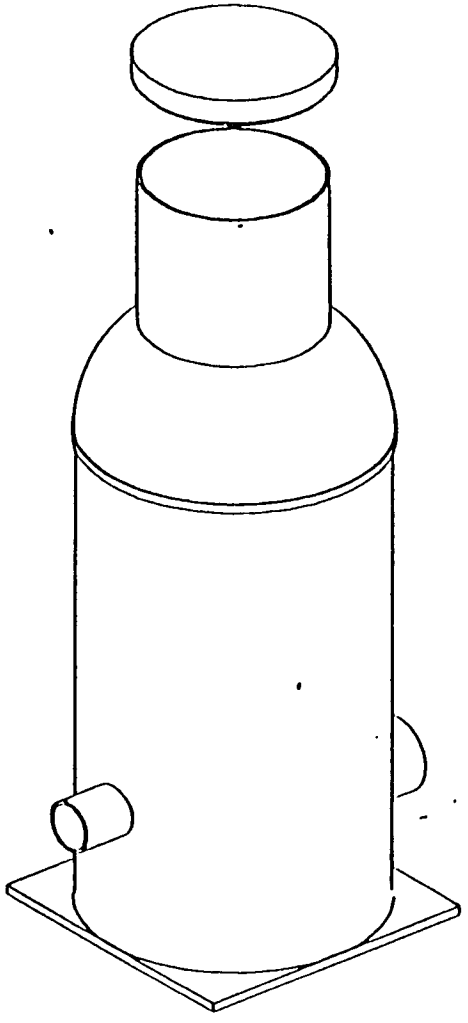

TYPICAL EXTRUSION WELD DETAIL

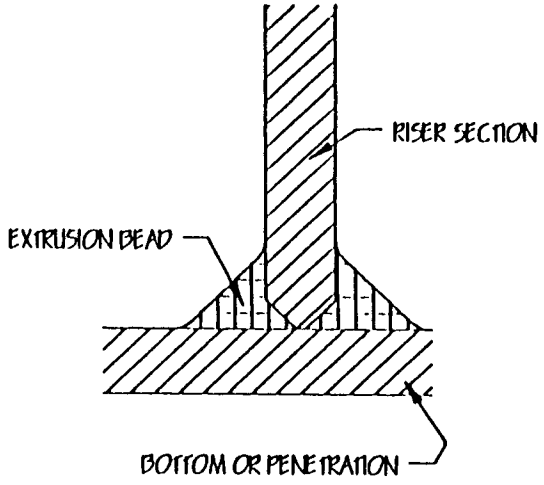

THIS DRAWING/DESIGN PROVIDED BY AND PROPERTY OF 'FLUID CONTROLS INC.' IT IS INTENDED FOR MANUFACTURE , INSTALLATION AND IDENTIFICATION USES OF PRODUCT DEPICTED AND SHALL NOT BE CIRCULATED OR REPRODUCED WITHOUT SPECIFIC PERMISSION FROM MANAGEMENT OF 'FLUID CONTROLS INC.' ALL RIGHTS RESERVED

DRAWING NUMBER OR NAME: 14CR1

APPROVED BY:

SUBMITTAL

DIMENSIONS IN INCHES UNLESS OTHERWISE NOTED
LINEAR TOLERANCE = 1/4"
ANGULAR TOLERANCE = 2

SCALE:

CUSTOMER

ORDER / QUOTE #

LOCATION :

DRAWN BY: INITIAL / CHECKED BY: DATE

FLUID CONTROLS INCORPORATED

DUAL CONTAINED HDPE SUCTION / DRAINAGE SUMP

Bill Of Materials

ITEM #	QTY	UNITS	DESCRIPTION	CLASS	SIZE	PART / DWG #
1	1	ea.	TOP , HDPE SHEET	SDR32.5	28" IPS	1
2	1	ea.	SUMP CONTAINMENT,HDPE M1000 PIPE	SCH40	2"	1
3	1	ea.	SUMP CARRIER , HDPE M1000 PIPE	SDR11	2" IPS	1
4	1	ea.	CONTAINMENT PIPE, HDPE M1000	"	2" thk	1
5	1	ea.	CARRIER PIPE , HDPE M1000	"	1" thk	1
6	1	ea.	CENTRALIZERS , FCI HDPE	STD	54"	1
7	1	ea.	CONTAINMENT BOTTOM, HDPE SHEET	"	24-16"	1
8	1	ea.	CARRIER BOTTOM , HDPE SHEET	1	1	1

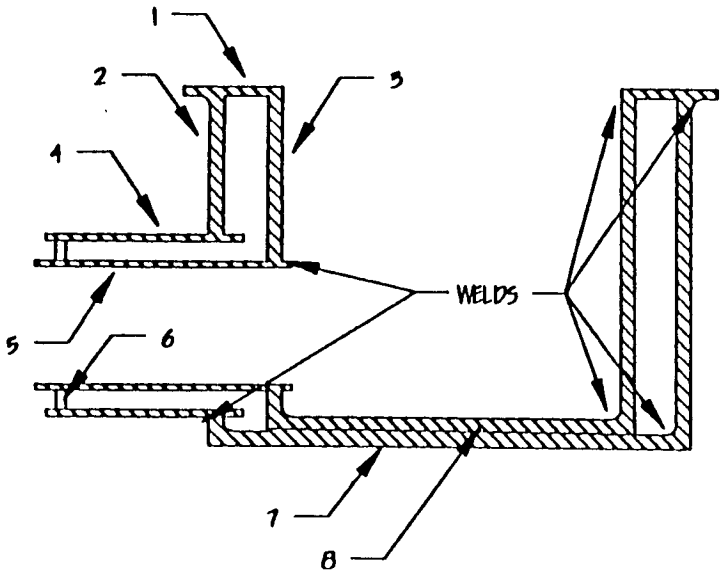

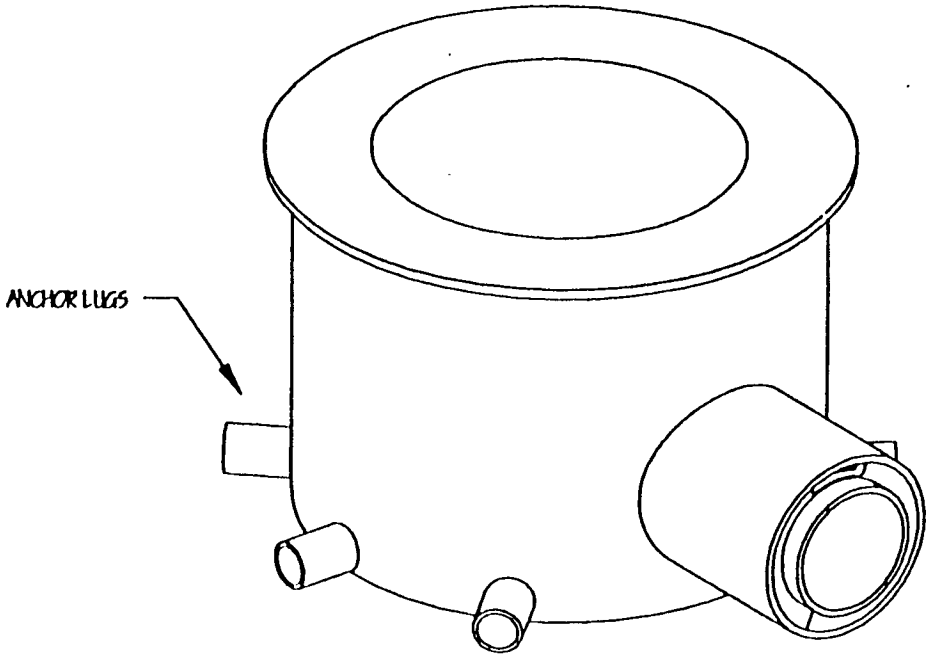

THIS DRAWING\DESIGN PROVIDED BY AND PROPERTY OF 'FLUID CONTROLS INC.' IT IS INTENDED FOR MANUFACTURE , INSTALLATION AND IDENTIFICATION USES OF PRODUCT DEPICTED AND SHALL NOT BE CIRCULATED OR REPRODUCED WITHOUT SPECIFIC PERMISSION FROM MANAGEMENT OF 'FLUID CONTROLS INC.' ALL RIGHTS RESERVED

APPROVED BY:

SUBMITTAL

DRAWING NUMBER OR NAME: DCSUMP

DIMENSIONS IN INCHES UNLESS OTHERWISE NOTED
LINEAR TOLERANCE = 1/4"
ANGULAR TOLERANCE = 2

SCALE:

CUSTOMER

ORDER / QUOTE #

LOCATION :

FLUID CONTROLS INCORPORATED

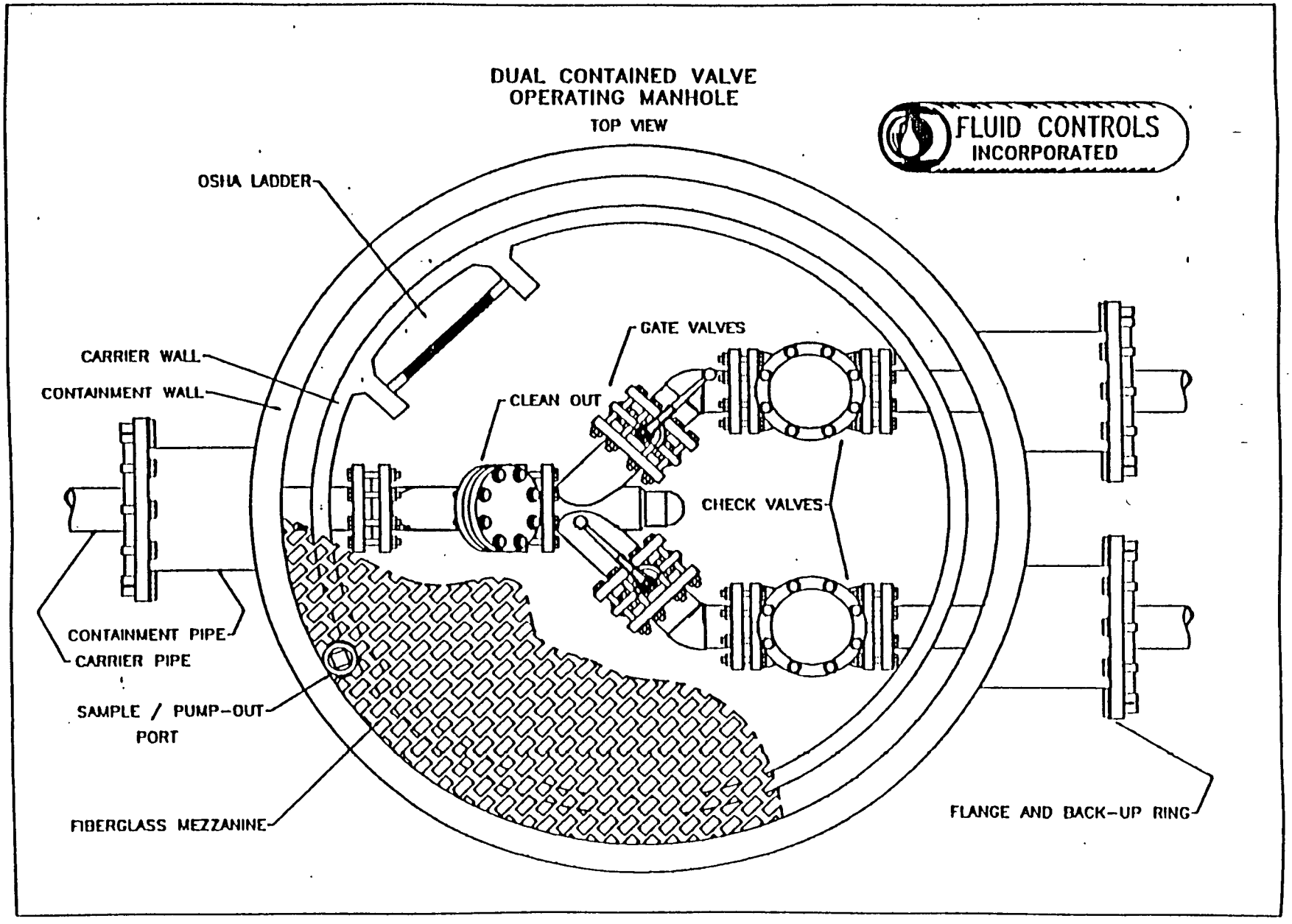
DUAL CONTAINED VALVE
OPERATING MANHOLE
TOP VIEW
FLUID CONTROLS
INCORPORATED
OSHA LADDER
CARRIER WALL
CONTAINMENT WALL
GATE VALVES
CLEAN OUT
CHECK VALVES
CONTAINMENT PIPE
CARRIER PIPE
SAMPLE / PUMP-OUT
PORT
FIBERGLASS MEZZANINE
FLANGE AND BACK-UP RING

FLUID CONTROLS INCORPORATED

DETAILS FOR TRAFFIC LOAD MANWAY

ECCENTRIC H-20 MANHOLE CAP FOR 48" AND 60" MANHOLES

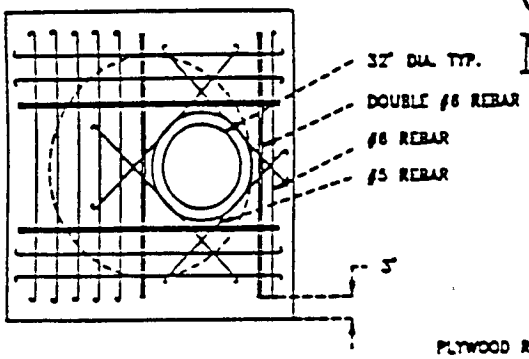

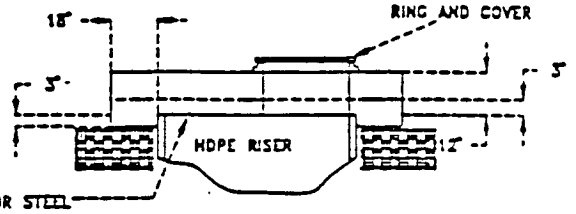

PLYWOOD ROOF, DECKING, OR STEEL MAY BE USED AS FORM AND REMOVED FOR POUR-IN-PLACE COVERS

CONCENTRIC H-20 MANHOLE CAP FOR 48" AND 60" MANHOLES

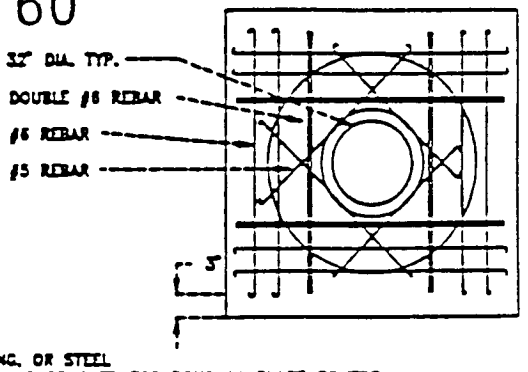

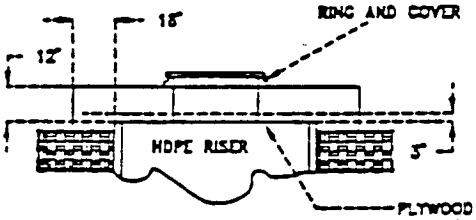

PLYWOOD ROOF, DECKING, OR STEEL MAY BE USE AS FORM AND REMOVED FOR POUR-IN-PLACE COVERS

CLASS 1 CRUSHED STONE BACKFILL FOR HIGHWAY OR CLASS 2 OR 3 MATERIAL COMPACTED TO 95% STD PROCTOR DENSITY AS SPECIFIED BY ENGINEER

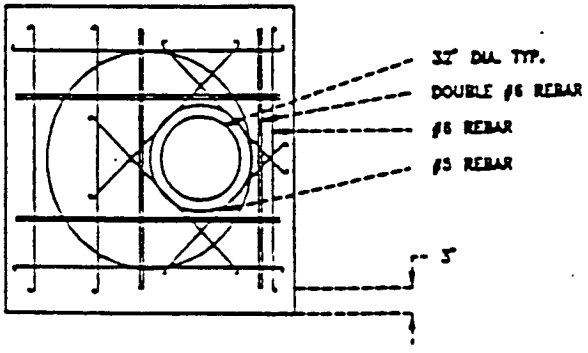

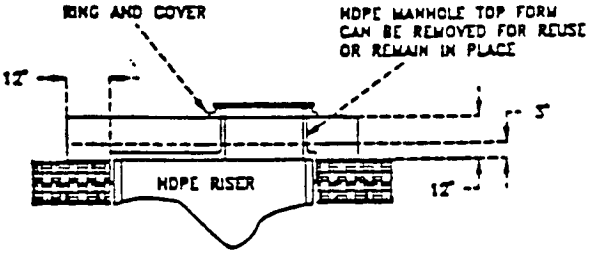

DETAIL OF DUAL CONTAINED PIPE STUB FUSED TO BEKAPLAST LINER

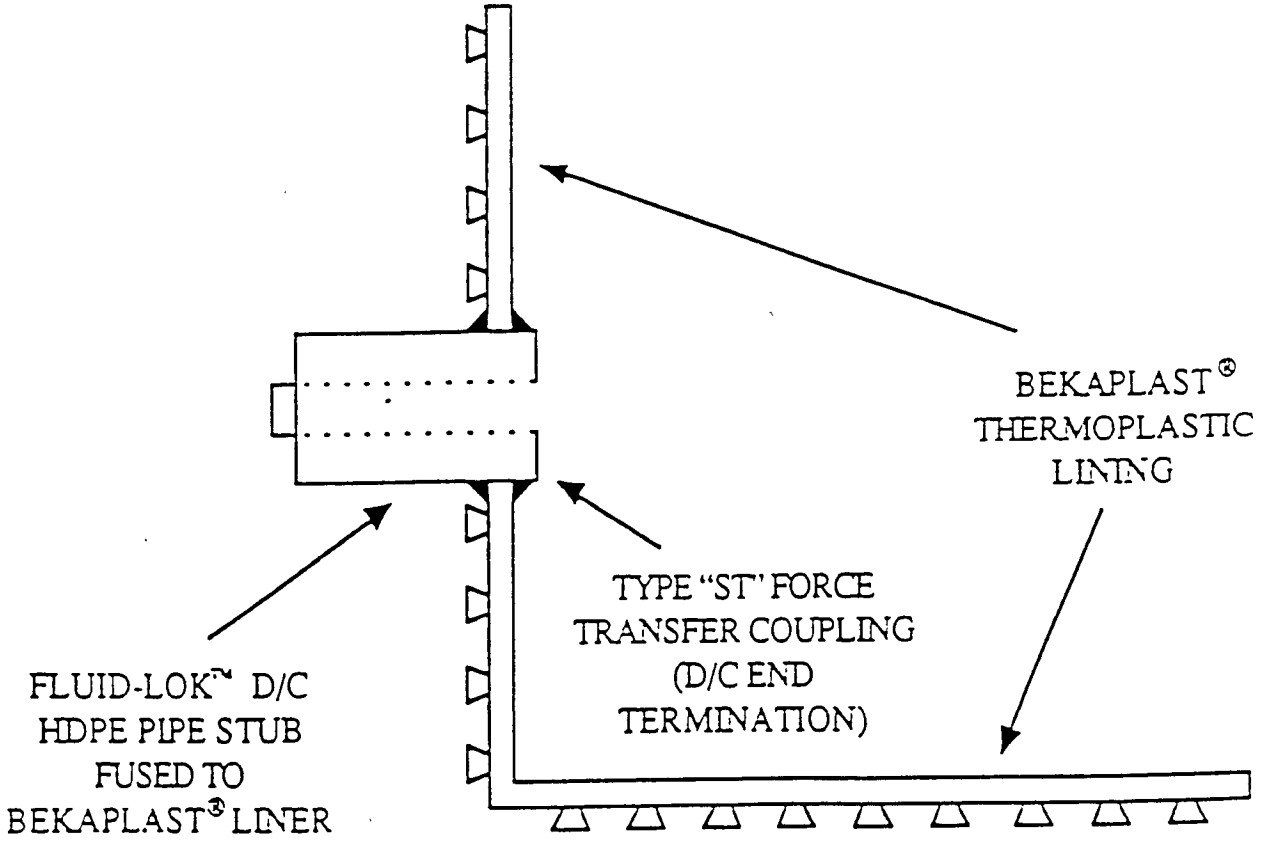

PULLING HEAD ASSEMBLY

COMPLETED ASSEMBLY ILLUSTRATION

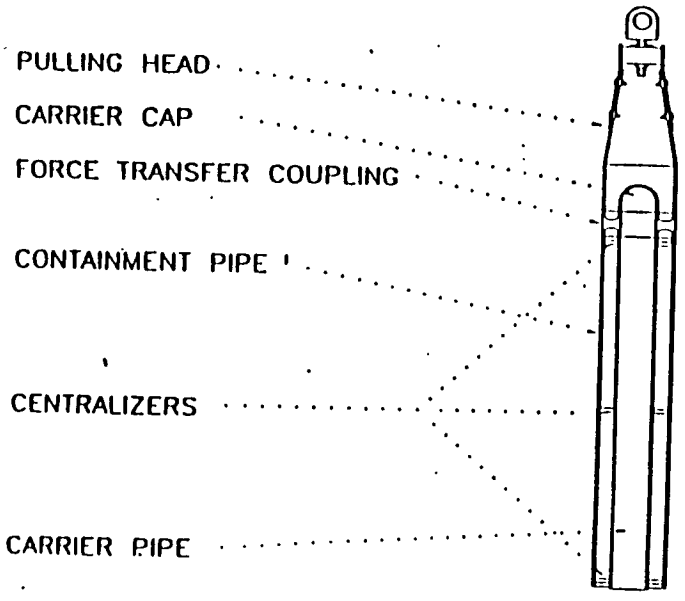

PULLING HEAD ASSEMBLY COMPONENTS

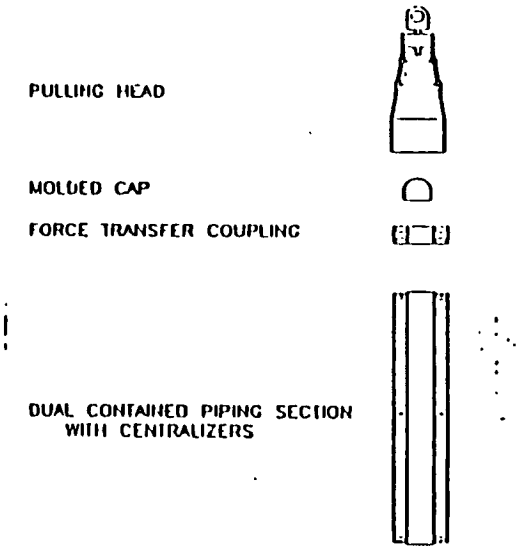

FINAL BUTT WELD ILLUSTRATION

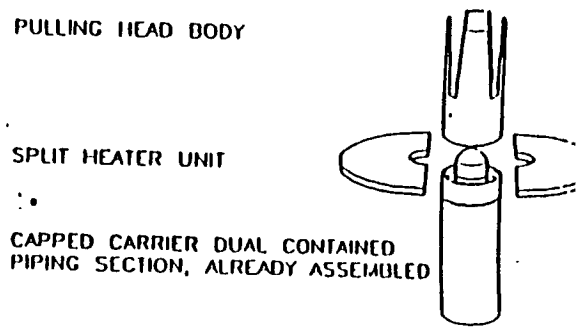

PERFORMANCE COMPARISON OF LEAK DETECTION TECHNOLOGIES

For sensing and locating leaks in double-containment pipe, there are currently two different types of cable systems available. These systems are based on two **fundamentally different technologies.**

The **TraceTek system** is based on detection of a conductive path. For aqueous fluids, the liquid itself provides a conductive path between the two sensing wires. For hydrocarbons, a specially formulated conductive polymer jacket swells when exposed to hydrocarbon fluids, and is thereby driven into contact with the sensing wires. In either case, **detection is based on creation of a circuit**; it requires that the conductivity change by several orders of magnitude. **The location is then determined by a simple application of Ohm's law.** The sensing cable has no exposed metal (it is fluoropolymer construction), **so chemical resistance is excellent.**

The **TDR** (Time Domain Reflectometry) approach **looks for changes in the waveform** of reflected signals. **Interpretation** of the reflected signals **requires a sophisticated microprocessor-based module** to generate pulses and then analyze the reflections.

Performance of the two systems hinges on the technologies on which they are based.

The **TraceTek system is simple and sure** since it looks for a step change; it even avoids corrosion as an issue by using conductive polymers (no exposed metal). Because TraceTek operation is based on a dramatic change (creation of a circuit), **it can reliably detect even a small puddle:** One can catch a leak in its early stages before it is a major event. The patented TraceTek wiring arrangement (the "diagonal" circuit) also ensures **consistent sensitivity and accuracy, regardless of location** in the circuit (it is not a function of distance from the module).

> The simple operating principle allows one to **check any portion of the system with an Ohmmeter or easy-to-use Portable Test Box (PTB).** The capability to subdivide the system in any way at any time can be extremely useful during startup and other times when troubleshooting is necessary (e.g. investigating multiple events). One can also use the module "update" feature (manually or automatically) to monitor changes following an alarm.

Finally, the simple resistance loop approach makes **branching an easy matter** (it just requires the right wiring, which is done in a standard part, the Modular Branching Connector). And a virtually unlimited amount of jumper cable can be used, so the distance to the panel/module, or the distance between areas monitored is not a concern.

A patent on **TDR** notes that **"changes in the shape of the reflected waveform caused by a leak may be subtle."** Analyzing the waveform makes the system dependent on sophisticated electronics, and **limits the sensitivity and accuracy** that are possible. Further, the TDR approach is **fundamentally less sensitive to most hydrocarbons**, as they have a smaller effect on cable impedance than do aqueous chemicals. For either type of fluid, **sensitivity and accuracy decrease with distance** from the alarm module because of **signal attenuation** (in jumper as well as sensing cable).

The sensing cable in a TDR system is a coax cable with a metal braid. In most constructions, that **metal braid is exposed to fluids**, and is therefore **subject to corrosion** (e.g., due to water present during installation and startup).

Because the TDR approach is based on analysis of the reflected waveform (comparing it with a reference), there is not a **positive / conclusive measurement of the initial condition**. This and the inherent limitations on segmenting the system (one must go out sequentially from the module) mean startup troubleshooting can often require truly expert assistance.

An advantage of the TDR system is the ability to "remap" the system (i.e., take a new reference) and monitor for subsequent changes. This can be useful after a leak, as one can look for additional leaks. However, there are dangers in this approach, as **one can overlook an alarm condition by masking a leak** (e.g., by mapping over a new, unrecognized leak) **or due to additional signal attenuation** from the leak(s).

Lastly, the module must monitor a single continuous cable string (no branches). One might double back on branches with jumper cable, or possibly use an additional module or module channel. However, the **limit of a single continuous cable string may significantly constrain the layout** for complicated systems, as may the fact the jumper cable counts as part of the system length.

Table of Contents

1. How to Use This Guide 2
- Overview of Sections 3

2. TraceTek System Description 4
- Overview of Technical Capabilities 6

3. General Project Considerations 7

4. Overview of Key Design Parameters 8

5. Mechanical Design/Installation Requirements 10
- Clearance 10
- Pipe Sizing 11
- Multiple Pipes 11
- Centralizers 11
- Fittings 12
- Containment Access 12
- Pull Rope 14
- Low-Point Drains 15
- Sealing of the Containment Pipe 16
- Mechanical Contractor's Hand-off Requirements 16
- Mechanical Specification Supplement 17

6. Electrical Design/Installation Requirements 19
- Power Requirements 19
- Hookup Requirements 19
- TraceTek Leak Detection Installation 20
- Performing the Acceptance Testing 22
- Purging the Containment Pipe 23
- Preparing a System Map 23
- Commissioning the System 23
- Electrical Specification Supplement 24

7. Summary of Contractor Responsibilities 26
- Mechanical Contractor's Responsibilities 26
- Electrical Contractor's Responsibilities 26

8. System Descriptions for Other Applications 27
- Double-Contained Tanks 28
- Pipe and Tank Combinations 30
- Trenches/Sumps 32

Tables
1. Suggested Pipe Sizing 11
2. Containment Access Requirements 12
3. Product Selection Matrix 27

Overview of Sections

The following is an outline of the remaining sections in this guide:

- TraceTek System Description provides an overview of the TraceTek leak detection system and its features.
- General Project Considerations suggests questions that must be considered when deciding on a leak detection approach.
- Overview of Key Design Parameters outlines the elements of the TraceTek system.
- Mechanical Design/Installation Requirements explains the piping system requirements in detail, and includes the supplemental mechanical specifications for cable-type leak detection that must be incorporated in the double containment pipe specification.
- Electrical Design/Installation Requirements explains the electrical requirements for cable-type leak detection systems, and includes the supplemental electrical specifications that must be incorporated in the specification.
- Summary of Contractor Responsibilities outlines the responsibilities of both mechanical and electrical contractors who are involved in or can affect the installation of cable-type leak detection systems.
- System Descriptions for Other Applications offers a brief discussion of double containment applications other than piping and provides a matrix of system capabilities and applications that will help in the selection of products for other applications.

2. TraceTek System Description

The TraceTek system for double-wall piping continuously monitors piping for liquid leaks all along the length of the sensing cable. In the event of a leak, the cable senses the presence of the fluid and activates an alarm and locator module. The module sounds an alarm and indicates on a digital display the distance to the leak. The system map installed next to the alarm module is used to pinpoint the leak location.

The module also sounds an alarm should there be any loss of system integrity.

The TraceTek system, therefore, is both an alarm system and a leak location system.

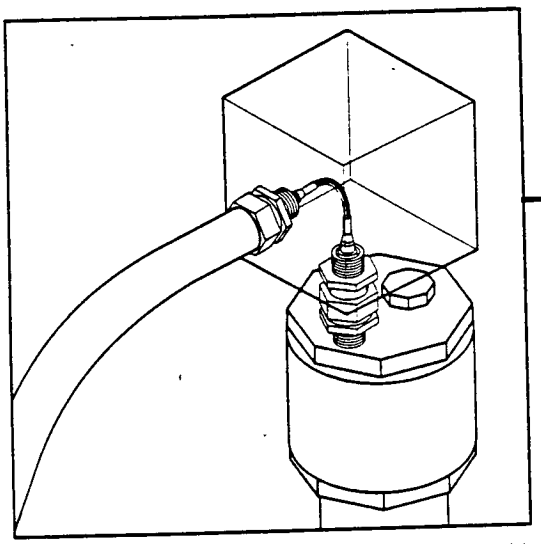

Tank cap assembly

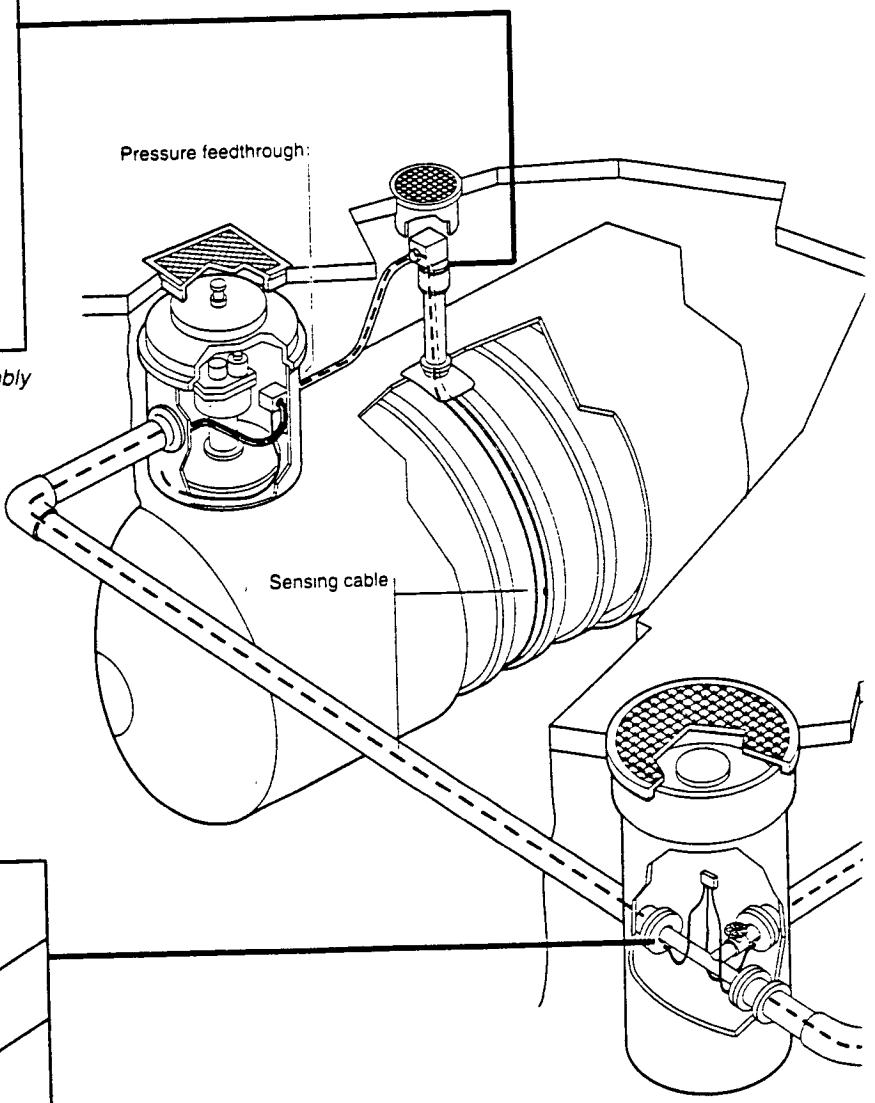

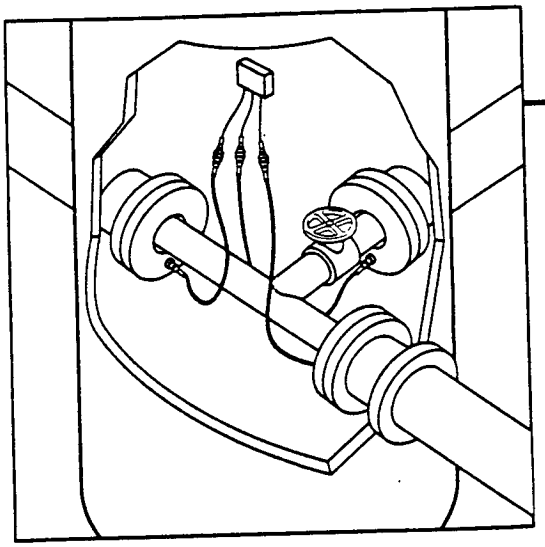

Branching connector

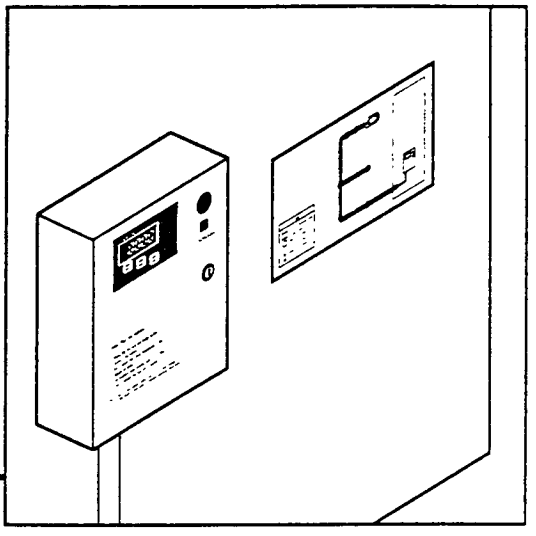

Alarm and locator module with system map

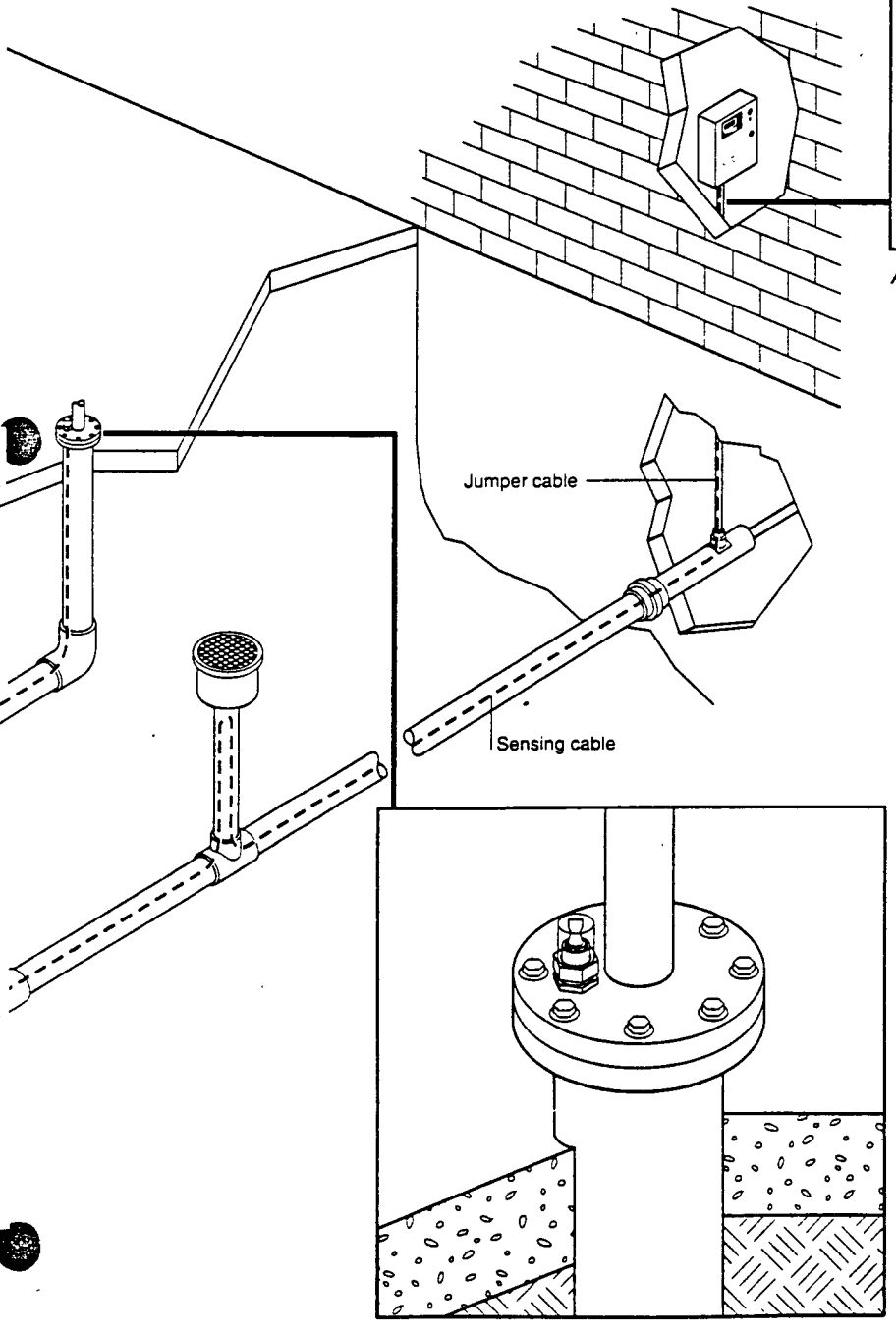

Modular end termination

Overview of Technical Capabilities

Alarm and Locator Module
The TraceTek alarm module provides both a visual and audible warning if there is either a leak or a loss of system integrity.

- The alarm module is available with a display that indicates, either in feet or in meters, the distance to a leak.
- One TraceTek alarm module monitors up to 2000 feet or 1000 meters of sensing cable.
- A single-pole-double-throw (SPDT) relay is a standard feature in the module.
- A current transmitter with a 4- to 20-mA output is available to link location data to host computers.
- Custom panels containing multiple alarm modules are available to monitor long distances or complex systems.

Sensing Cable
The TraceTek sensing cable is installed in the containment of double-wall pipes at the six o'clock position. Low voltage is applied between the cable's two sensor wires. Contact with a leak bridges the gap between the sensors, completing an electrical circuit that activates the alarm.

- Sensing cables are available to detect fuels, solvents, and aqueous fluids.
- Sensing circuits can be branched using branching connectors to accommodate complex piping arrangements.

Jumper Cable
Jumper cable is the system's interconnect cable.

- The maximum length of standard jumper cable is 10,000 feet. Longer lengths may require factory assistance.

System Map
The TraceTek system is designed to be used in conjunction with a graphic system map prepared from "as built" drawings. The system map should be mounted near the alarm module, should show the pipe layout and the location of all pipe access points, and should indicate actual cable distance readings at each access point.

Approvals
The system has been approved by:

- Underwriters' Laboratories, Inc. (UL)
- Factory Mutual (FM)
- Canadian Standards Association (CSA)
  For approval details, see Table 3 on page 27.

Certifications
The system meets the requirements for Carnegie Mellon Research Institute Certification ("Test Procedures for Third Party Evaluation of Leak Detection Methods: Cable Sensor Liquid Contact Leak Detection System").

3. General Project Considerations

Leaks are likely to occur even in the best engineered systems. The following are some considerations to address when selecting the leak detection approach.

Environmental Hazards

- What are the characteristics of the fluids handled?
- Are they flammable, toxic, or corrosive?
- Is the installation in an ecologically sensitive area, as near an aquifer?
- What is needed to comply with local regulations?

Probability of a Leak

- What are the conditions and complexity at the specific facility?
- What are the routine practices at the facility?

Impact on Operations

- What is the potential for property damage or injury?
- What is the cost of down time or disruption?

Accessibility of Pipe

- Is the pipe above or below grade?
- Is the pipe located beneath buildings or other concrete emplacements?

Coverage

- What are the length and accessibility of branched sections?

4. Overview of Key Design Parameters

The following points outline the mechanical design and installation requirements for a cable-ready double containment pipe system.

Clearance

- Ensure minimum 0.75-inch clearance throughout the piping system.
- Place sensing cable at the bottom of the pipe.
- Specify appropriate pipe sizing (such as 1x4, 2x6) on drawing.

Pull r pe

- Use 0.25-inch- or 0.75-inch-diameter, hollow-braid, polypropylene rope; no substitutions.
- Ensure that the pull rope is continuous, not tangled, knotted, pinched, or glued.

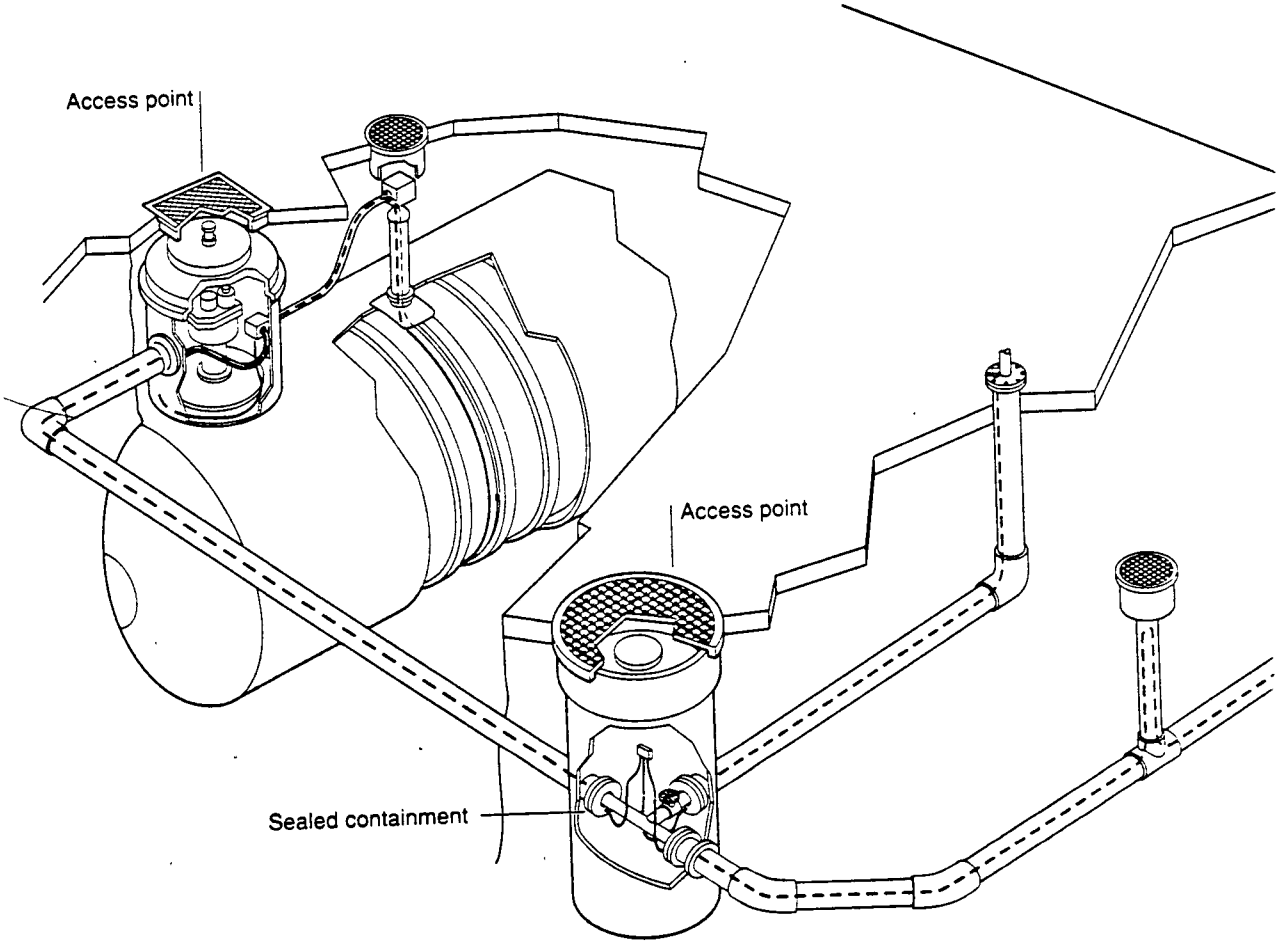

Installation

- Install connectors in access points.
- Align and fix centralizers to primary pipe.
- Avoid sharp angles and edges throughout the pipe system.
- Pull sensing cable before burying pipe.
- Ensure the pipe system is clean and dry.

Sealed Containment

- Ensure leak does not enter environment.
- Exclude liquids other than leaks.

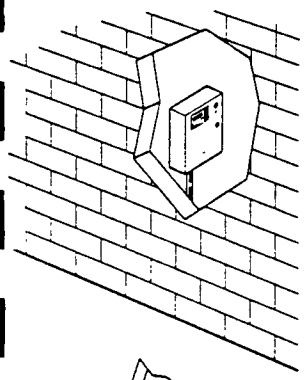

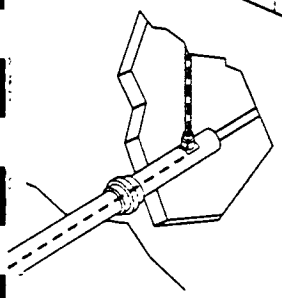

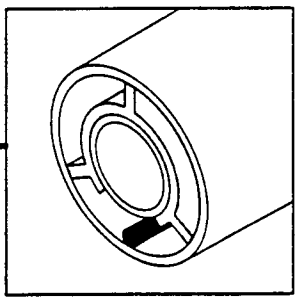

Clearance required

Access Points

- Incorporate 4-inch nominal fittings.
- Extend to within 8 to 10 inches of grade.
- Protect with manhole covers.

Needed for:

- Installation/service of sensing cable.
- Investigation of leaks.
- Pipe drying.
- Mapping of reference points.

Needed in piping at:

- Beginning and end of each run.
- Beginning and end of sensed branches.
- At the following intervals:
  < 1-inch annular clearance: After 180° of pipe bend or every 250 feet of straight pipe.
  > 1-inch annular clearance: After 360° of pipe bend or every 400 feet of straight pipe.

5. Mechanical Design/Installation Requirements

This section describes mechanical design and installation requirements for double containment piping that will be monitored by a cable-type leak detection system. Included in this section is a piping specification supplement (beginning on page 17) that must be incorporated into the "Division 15: Mechanical" portion of the piping system specification.

The following sections amplify what is contained in the specification supplement by:

- Providing guidance for the design of a cable-ready pipe system.
- Outlining the mechanical engineers or mechanical contractor's responsibilities.

It is the mechanical engineers responsibility to:

- Verify that the mechanical design guidelines are met.
- Determine whether the pipe to be used meets the requirements for clearance, pipe size, centralizers, containment access, pull rope, drains, and sealing.
- Specify the leak detection system as part of the electrical or instrumentation portion of the specification or, alternatively, provide a separate section for leak detection in the specification.

Clearance

A minimum clearance is required at the 6 o'clock position in the piping system in both straight sections and fittings to ensure that the sensing cable can be properly installed.

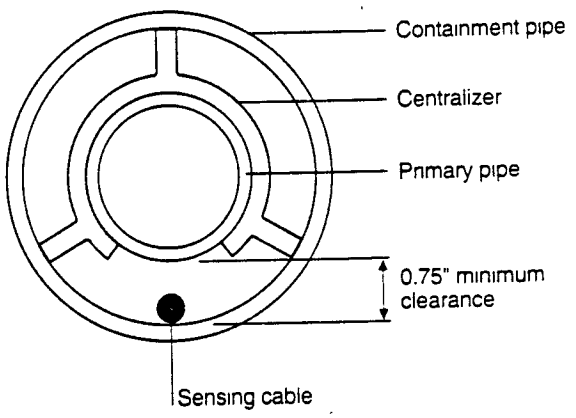

Even when the piping system is designed for this 0.75-inch containment space, special care must be taken to ensure that the minimum clearance is maintained during installation. Interference to pulling may occur due to weld beads (as in the case of the butt fused pipe shown below) or glue beads (as in the case of the bell and spigot pipe shown below) at the pipe coupling .

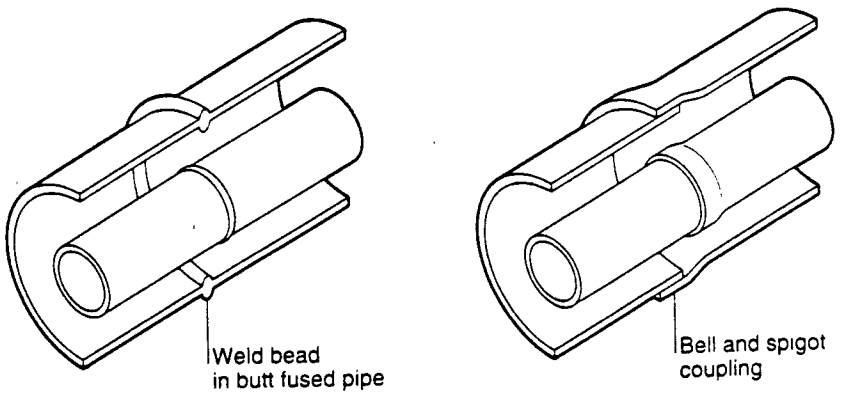

Pipe Sizing

Use Table 1 as a guideline to specify the diameter of the primary pipe and the containment pipe to provide the 0.75-inch containment space.

Table 1. Suggested Pipe Sizing (dimensions in inches)

Primary Pipe	Containment Pipe	Primary Pipe	Containment Pipe
1	4	8	12
2	6	10	14
3	6	12	16
4	8	14	18
6	10	16	20

Multiple Pipes

For multiple pipes installed in a single containment pipe, contact the factory for engineering guidance.

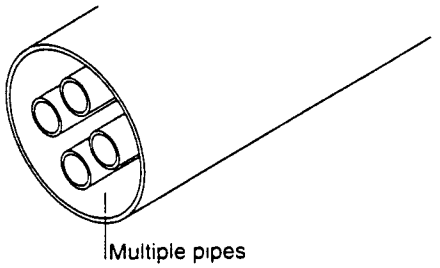

Centralizers

Centralizers are required for structural support. They must be designed to.

- Position the primary pipe within the containment pipe.
- Withstand loads of filled pipe to prevent the primary pipe from sagging.
- Withstand lateral loads due to thermal expansion.
- Allow liquid to pass through the containment space so it can be drained.
- Allow air to pass through the containment space so it can be dried.

The centralizers themselves must be:

- Free of sharp edges and pinch points.
- Aligned within +/–5° during installation (to ensure a straight pull path).
- Fixed to the primary pipe.

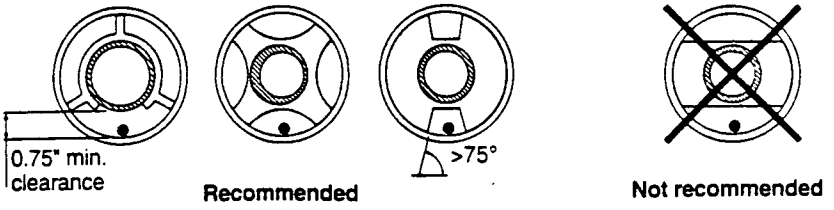

Fittings

Sweep 90°'s are recommended to facilitate the installation of the sensing cable. Conduit should be fastened into fittings that have mitered joints or into pipes with radius differences that create pinch points. A 0.75-inch conduit with a minimum 4.5-inch bend radius is recommended when installing preconnectorized sensing cable. The conduit must have flared ends without rough edges to reduce resistance to pulling.

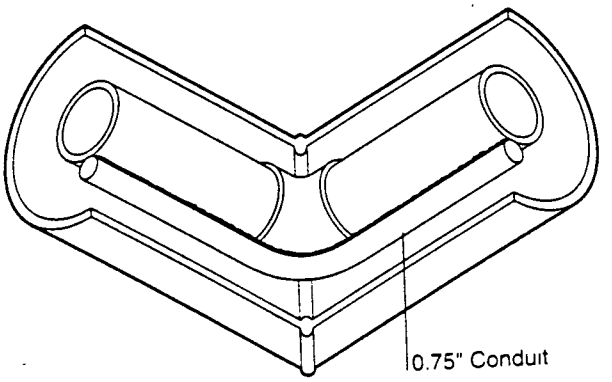

Containment Access

Access to containment pipe is necessary for:

- Installation of sensing cables.
- Investigation of secondary containment; clean up; and drying.
- Maintenance/service of sensing cable.

Different kinds of access to the containment pipe are possible, depending on the piping design. The following three design scenarios are covered in this section:

- Below ground pipe.
- Segmented pipe.
- Exposed containment pipe.

In general, access to the containment should be positioned as described in Table 2.

Table 2. Containment Access Requirements

At the beginning and end of each pipe run.	
At each branch or lateral that is sensed.	
At intervals specified below.	
Annular clearance	**Required location of access points**
< 1-inch	After 180° of pipe bend or every 250 feet of straight pipe
> 1-inch	After every 360° of pipe bend or every 400 feet of straight pipe

B low Gr und Pip
To provide access into a buried double containment pipe, 4-inch-minimum-diameter tees that rise up to grade must be incorporated into the pipe containment. Each access riser should extend from the pipe to within eight to ten inches of grade and be protected by a manhole cover that is set in concrete of appropriate thickness to prevent damage to the pipe.

Manhole covers: Each manhole cover must:

- Be an appropriate size (at least 6" greater than the riser diameter; for example, a 4" riser requires a 10" cover).
- Have a surface that is one inch higher than the grade.
- Have a surface that is gradually sloped to the grade to resist drainage into the access area.

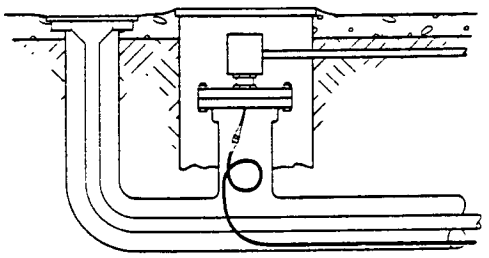

Cable entry access

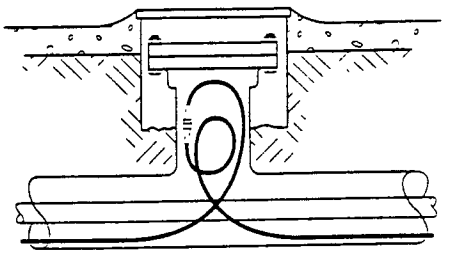

Intermediate access

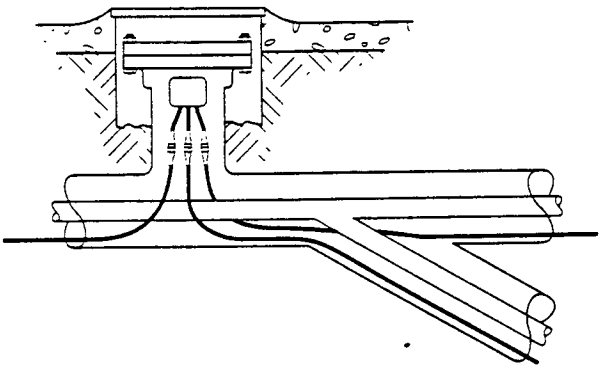

Lateral with access riser

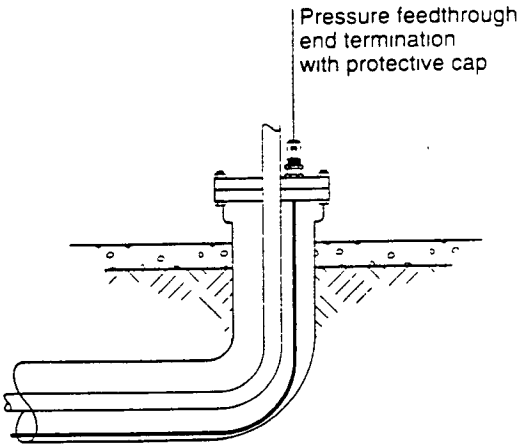

Containment termination

Segmented Pip
If the pipe is segmented at manholes or vaults, use saddles or end-plate penetrations instead of access tees and risers for cable entry and exit points.

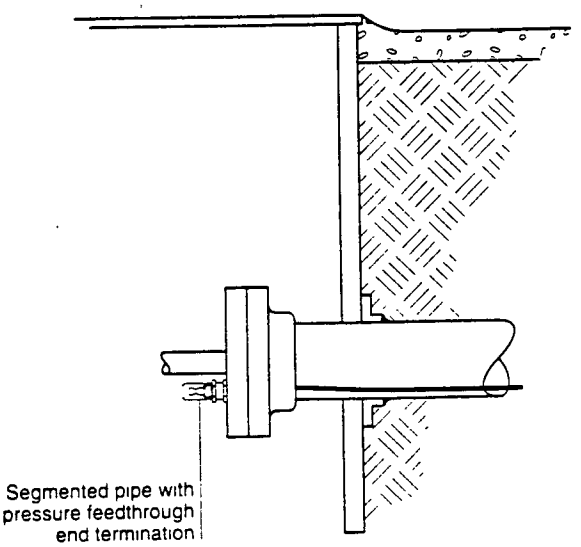

Exposed Containment Pipe
Under some conditions, portions of the containment pipe may be above ground or accessible within buildings, tunnels, vaults, and manholes, in which case the cable entry and exit techniques just described for segmented pipe may be appropriate. Access points must be located at the intervals shown in Table 2 (page 12).

Pull Rope

A pull rope is used to pull the sensing cable through the containment pipe. It must be:

- A 0.25-inch or 0.375-inch hollow-braid polypropylene rope (no substitutes are acceptable).
- Continuous and free of tangles or knots.
- Loose in the pipe, not pinched or glued in.

The rope is installed as the pipe is being assembled in the field. Factory assembled sections of pipe may include preinstalled lengths of pull wire, which may be used to draw the continuous hollow-braid pull rope into place.

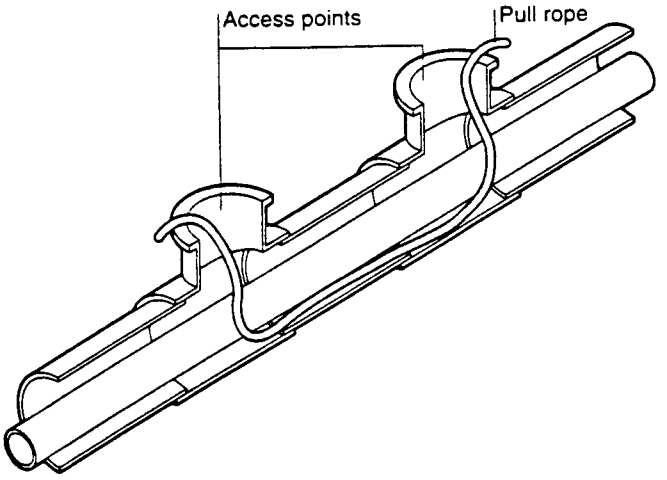

Sealing of the Containment Pipe

Secondary containment pipes must be sealed from the environment in order to:

- Contain leaks.
- Avoid ingress of ground water and rain.
- Minimize the potential for condensation.

Special care should be taken at manholes, sumps, valve pits, and vaults to ensure a sealed containment.

Mechanical Contractor's Handoff Requirements

The mechanical contractor is responsible for keeping the containment piping clean and dry. Before handoff to the leak detection installer the mechanical contractor must demonstrate that the containment piping is ready for installation of the sensing cable. To accomplish this the contractor must:

- Pressure test the pipe.
- Inspect the pull rope.
- Do a demonstration pull.
- Dry the pipe.
- Hand over "as built" drawings to the sensing cable installer.

Piping Pressure Tests
Two types of pressure test may be performed on the piping:

- Hydrostatic test
- Pneumatic test

The pneumatic test is preferred when testing the containment piping since it reduces the amount of liquid that must be removed from the containment space.

Pull rope inspection
The mechanical contractor must verify that the pull rope is:

- A 0.25-inch- or 0.375-inch-diameter hollow-braid polypropylene rope.
- Installed from access to access.
- Knot-free in the pipe.
- Loose in the containment.

Annular Clearance Inspection/Pull Rope Demonstration
A satisfactory annular clearance is demonstrated by a successful back-to-back pull. This is done by first attaching a cable pulling tool to the installed (initial) pull rope, which in turn is attached to a second pull rope. The contractor then pulls the initial pull rope through the containment pipe. As the initial pull rope is removed, it should be visually inspected for mud, dirt, other contaminant's, and wetness. If any of these elements are present, reasonable cleanup methods must be employed.

Drying the Pipe
Before the sensing cable is installed, the containment piping should be dried with forced air moving down the gradient of the pipe. (Should there be any water in the containment, forcing air up the pipe would blow the water throughout the pipe, making it much more difficult to dry).

Handoff
Handoff takes place when the above steps have been satisfactorily completed and the piping contractor or mechanical contractor has supplied "as built" drawings to the sensing cable installer.

Division 15: Mechanical Design Requirements for Double Containment Piping used with Cable-Type Leak Detection Systems

Purpose
The information outlined in this supplement describes the requirements for the mechanical design and fabrication of piping systems that will use cable-type leak detection systems.

Part 1. General
1.1 Installation of cable-type leak detection systems requires the coordination of multiple trades. The general contractor shall ensure that the mechanical and electrical contractors understand their responsibilities and that schedules are coordinated. In the absence of a primary electrical contractor, the mechanical contractor shall utilize the services of a qualified electrician to install and commission the leak detection system.

1.2 The mechanical contractor shall be responsible for fabricating the double containment piping system in such a manner that leak detection sensing cable may be installed. During assembly the mechanical contractor shall install a 0.25-inch- or 0.375-inch-diameter knot-free, hollow-braid polypropylene pull rope in the bottom of the containment pipe. Upon completion of the installation, the pull rope shall be continuous from access point to access point and shall be capable of free movement without obstruction.

1.3 During construction, care shall be taken to assure that the containment space is kept clean and dry. The mechanical contractor is responsible for removing any water, moisture, mud, or other debris from the containment space prior to releasing the piping system for sensing cable installation The containment pipe shall be fabricated such that it is liquid tight and sealed from the environment.

Part 2. Products
2.1 Pipe system materials shall be specified by the engineer.

2.2 Centralizers shall be used to provide structural support and to position the primary pipe in the containment. Centralizers shall be spaced as specified in order to assure that the primary pipe is completely supported during operating conditions (that is, with full weight of the fluid load, under thermal expansion stress, etc.).

2.3 Openings at the bottom of the centralizer shall ensure a minimum of 0.75-inch clearance for the installation of the pull rope and sensing cable. Centralizer design shall preclude any narrow angles, sharp edges, or other pinch points that could cause the pull rope or sensing cable to become wedged, pinched, or otherwise damaged during installation.

2.4 Access points shall be used to facilitate the installation of the sensing cable in the containment space. These access points shall be located at the beginning and end of the main pipe run, at the beginning and end of all sensed branches, and at periodic intervals as follows:

<1-inch annular clearance: After 180° of pipe bend or every 250 feet of straight pipe.

>1-inch annular clearance: After 360° of pipe bend or every 400 feet of straight pipe.

2.5 Access risers (tees in the containment pipe that rise to within 8 to 10 inches below grade) shall be a minimum of 4 inches in diameter and shall be accessible from the finished grade without excavation.

2.6 Each prefabricated or field-fabricated piping section may include a pull wire. The pull wire shall be used as an aid to install a continuous 0.25-inch- or 0.375-inch-diameter hollow-braid polypropylene pull rope; no substitutions for this rope shall be acceptable. The pull rope will be used for sensing cable installation. The pull wire shall be disposed of when it is no longer needed to pull in the continuous rope. Spliced or knotted sections of pull wire are not acceptable as the final pull rope.

2.7 Recommended: Low-point drains shall be installed at periodic intervals along the pipe for removing liquid from the containment space.

Part 3. Execution

3.1 The contractor shall ensure that the centralizers are bonded to the primary pipe during installation, to prevent movement of the centralizer when the primary pipe is inserted into the containment.

3.2 Centralizers shall be aligned to within +/- 5° to ensure an unobstructed path for the pull rope and sensing cable at the 6 o'clock position of the annular space.

3.3 Access risers shall be capped with a re-enterable, sealed fitting and be protected from surface traffic with a minimum 10-inch-diameter or appropriately sized manhole cover (6 inches larger than the riser diameter). The manhole cover's finished level shall be at least 1 inch above the finished grade. A beveled concrete apron shall be installed around the manhole cover assembly to prevent water from draining into the valve pit.

3.4 A hollow-braid polypropylene pull rope (0.25 inch or 0.375 inch in diameter) shall be installed throughout the piping system during fabrication. The pull rope shall be continuous and knot-free between access points and be unobstructed and loose in the pipe.

3.5 The contractor shall take special care with glued couplings or butt-fused pipe to ensure that the weld bead or glue bead does not obstruct the 0.75-inch clearance required for the pull rope and sensing cable at the 6 o'clock position in the containment space. Short sections of aircraft cable may be used as a leader during pipe joint assembly to prevent the continuous pull rope from becoming glued, welded, melted, dissolved, or otherwise damaged during fabrication.

3.6 The mechanical contractor shall take all necessary precautions to prevent water, snow, ice, mud, dirt, or any other debris from entering the containment space during pipe installation. Any standing liquid, moisture, or debris that does accumulate in the containment during installation or hydrostatic testing shall be removed by the mechanical contractor. If water or other contaminant's are discovered during sensing cable installation, they too shall be removed by the mechanical contractor.

3.7 The piping system shall be handed off for sensing cable installation after all hydrostatic and pneumatic testing is complete. The mechanical contractor must demonstrate that the minimum 0.75-inch clearance has been met, that the pull ropes have been installed from access to access, and that they are loose and free in the pipe. This shall be accomplished by a cable pull test in which the cable pulling tool is used to pull an additional pull rope through the pipe. The initial pull rope shall be visually inspected for mud, dirt, or wetness. The piping system shall be clean and dry for the handoff to be complete.

3.8 The mechanical contractor shall provide the sensing cable installer with a set of "as built" pipe drawings. These drawings shall be used by the installer to prepare the leak detection system map.

6. Electrical Design/Installation Requirements

This section describes the electrical requirements for a cable-type leak detection system for double containment pipe. Included in this section is an electrical specification supplement beginning on page 24 that must be incorporated into the "Division 16: Electrical" portion of the piping system specification. To facilitate proper installation and improve reliability, the leak detection system should be specified as part of the electrical or instrumentation portion of the specification, or alternatively, be provided in a separate section for leak detection.

Most of this section amplifies what is contained in the specification supplement, providing guidance for the electrical design and installation of the system.

Power Requirements

Each alarm module requires:

- A dedicated 15-amp, 115/230-volt ac circuit

Hookup Requirements

The leak detection supplier should provide:

- Alarm module(s)
- Jumper cables
- Sensing cables
- Feedthrough fittings
- All connection components

The leak detection installer should provide:

- Conduit
- Safety barrier enclosure (required for CID1 locations)
- Sealtite™ fittings (optional)
- Flexible conduit
- Junction boxes

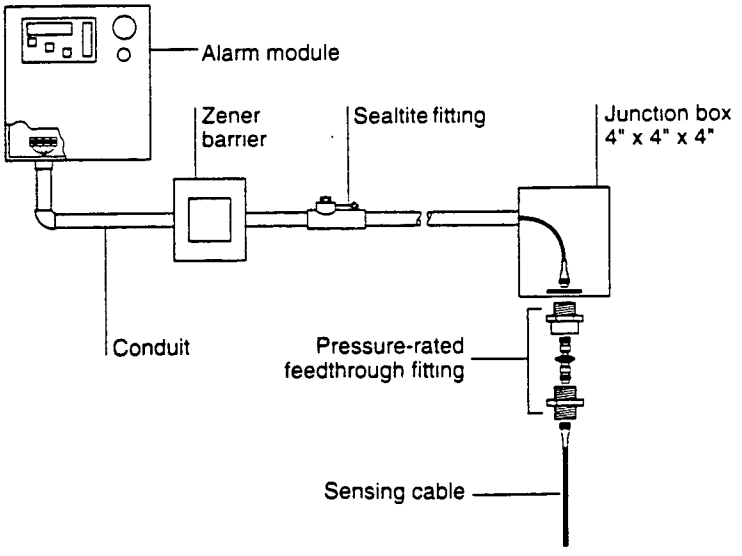

Safety Barriers and Enclosure (required for CID1 I cati ns)
When the sensing cable is to be operated in a Class I, Division 1 hazardous location, a zener safety barrier must be installed between the alarm module and the containment-pipe entry point. The zener barrier assures that energy transferred to the sensing cables will remain below intrinsic safety limits and will reduce the risk of fire or explosion. Using this device will comply with local requirements and the National Electrical Code.

An appropriate device that meets these requirements can be purchased from MTL Incorporated, 8657 Wellington Road, Manassas, Virginia, 22110-1690; phone (703) 361-0111; fax (703) 368-1029. Catalog description: MTL-765 zener barrier MT-Z enclosure. Note: Safety barrier must be installed in accordance with manufacturer's instructions.

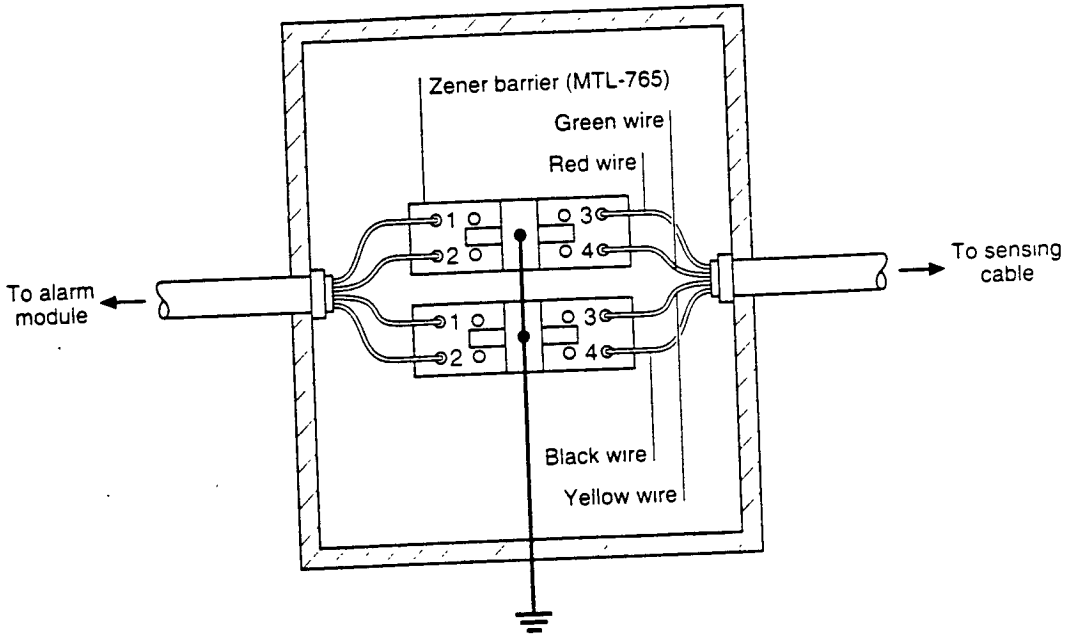

Junction Boxes
Junction boxes should be installed at the location of each sensing cable penetration. They should be type NEMA 4X (above grade) and/or NEMA 6 (below grade).

Junction boxes used at the point of entry require a minimum box size of 4 x 4 x 4 inches. Junction boxes used for branched connectors require a minimum box size of 6 x 6 x 4 inches.

TraceTek Leak Detection Installation

When the mechanical contractor has completed the handoff requirements per section 3.7 of the Mechanical Specification Supplement (see page 18), the TraceTek installation begins. The electrical contractor's responsibilities include:

- Mounting the alarm module.
- Installing the conduit, junction boxes, fittings, jumper cable, optional zener barrier, and sensing cable.
- Performing the acceptance testing.
- Purging the containment.
- Preparing a system map.

Mounting the Alarm Module
The alarm module must be installed according to the manufacturer's directions.

Installing the Sensing Cable
The first sensing cable is installed from the cable entry point to the first access point. Subsequent lengths of sensing cable are installed from access point to access point. The pull rope installed by the mechanical contractor is used to pull the sensing cables through the containment piping.

No lubricants should be used when installing the pull rope or sensing cables.

Installed sections of sensing cable and field-installed connectors should be tested as they are attached. To do this, a portable test instrument or ohm meter should be used, according to the sensing cable installation instructions.

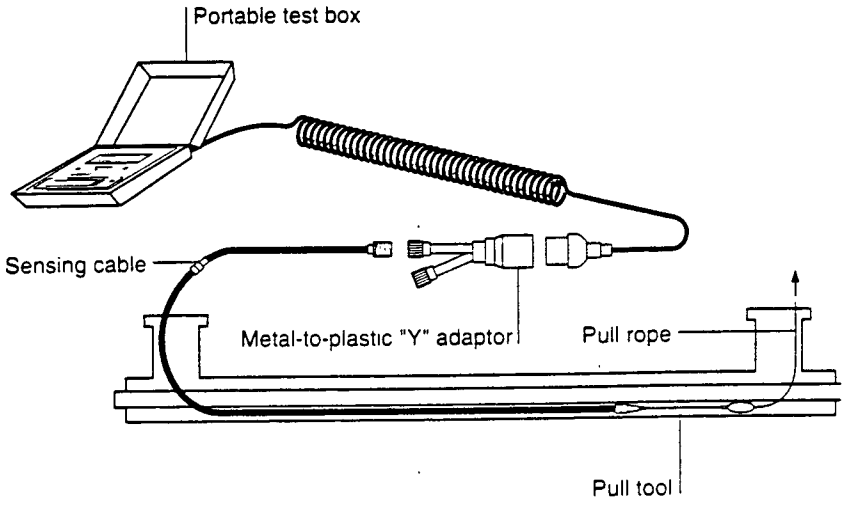

Optional: The modular branching connector should be installed in the access riser so that the sensing cables are not pulled around angles greater than 90°

Service Loop
A connector with a service loop should be accessible at each access point Sufficient sensing cable is required at the access point to allow for maintenance at grade level.

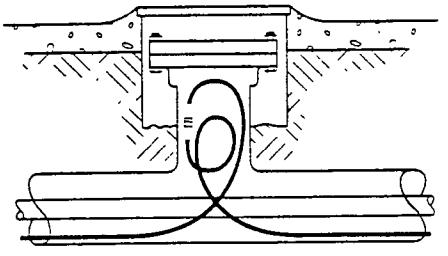

Service loop

Terminating the Sensing Cable
The modular end termination can be handled in two ways: it can be placed inside the access point at the end of the service loop or be brought through the pipe wall using a pressure feedthrough fitting as shown below.

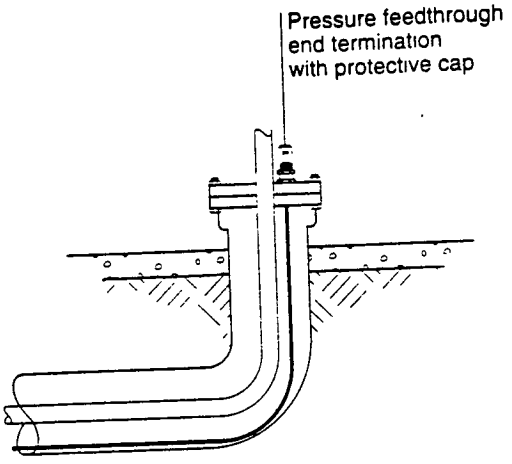

Performing the Acceptance Testing

In order to simulate possible leak conditions in the pipe and to verify system performance, the following acceptance testing is required upon completion of the system installation:

- A five-foot length of factory preconnectorized sensing cable must be temporarily installed at the far end of each leak detection circuit.
- The water (or aqueous chemical) sensing cable, if installed, must be immersed in a one-foot-diameter puddle of water at a depth of 0.125 inch to confirm that an alarm will be generated and the appropriate distance is indicated on the alarm module.
- The five-foot hydrocarbon sensing cable, if installed, must be tested in the same manner as the water sensor but with the appropriate hydrocarbon. (The hydrocarbon sensing cable used in this test is discarded after the testing is completed.)

The installer must perform and certify the tests in the presence of the owner's representative.

WARNING! When performing this test use appropriate safety procedures for handling flammable fluids.

Purging the Containment Pipe (aqueous systems only)

Upon completion of the acceptance testing and removal of the temporary test section, the piping containment must be purged with -20°F dew-point air or dry nitrogen. After the purging the containment must be sealed.

Preparing a System Map

Upon completion of the installation, the leak detection installer must prepare a graphic display map from the "as built" drawings received from the mechanical contractor. The map must indicate, per manufacturer's instructions, the location of:

- The sensing cable and connectors
- Distance readouts along the sensing cable to landmarks, such as:
  - Equipment
  - Piping access points (manholes and vaults)
  - Tanks
  - Changes of cable direction

The map must then be mounted next to the alarm module.

Commissioning the System

The commissioning procedure includes system measurements taken with a portable test instrument and an ohm meter. This procedure is intended to ensure a functional system.

The Commissioning/Service Record form must be completed by the installer or leak detection supplier and signed off by the system owner.

When the commissioning has been completed, the supplier of the leak detection system should provide the following to appropriate operators and personnel:

- Operator training
- Operations and maintenance manuals

Electrical Specification Supplement

Division 16: Electrical Design Requirements for Cable-Type Leak Detection in Double Containment Piping

Purpose
The information outlined in this supplement describes the requirements for a successful installation of cable-type leak detection in double containment piping systems.

Part 1. General
1.1 Installation of cable-type leak detection systems requires the coordination of multiple trades. The general contractor shall ensure that the mechanical and electrical contractors understand their responsibilities and that schedules are coordinated. In the absence of a primary electrical contractor, the mechanical contractor shall use the services of a qualified electrician to install and commission the leak detection system.

The electrical contractor shall be responsible for installing the alarm module, sensing cable, and components according to the manufacturer's instructions.

Part 2. Products
Cable-type leak detection materials shall be specified according to the product specification guidelines for Aqueous Chemical, Fuel, or Fuel and Water Leak Detection for Containment Piping.

Part 3. Execution
3.1 The alarm module shall be installed in an ordinary area at the location designated on the project plans. The installer shall provide the necessary hardware to securely attach the module to the wall surface at the mounting location. A dedicated (115 Vac/230 Vac) 15-amp circuit shall be provided for each alarm module. The power circuit shall include a circuit breaker suitable for de-energizing the alarm module during wiring and maintenance.

3.2 Conduit, flex conduit, and watertight junction boxes shall be installed as necessary to connect the alarm module to the nearest pipe-entry access, in manholes or vaults, and at the location of each sensing cable end termination Optional: If intrinsically safe output circuits are required, an enclosure for the zener barrier shall be installed between the alarm module and entry to the hazardous area. Sealtite™ fittings shall also be installed in the conduit run to prevent the migration of explosive vapors.

3.3 All jumper cable shall be supplied by the sensing cable manufacturer. Transition from the conduit and junction boxes to the annular space of the containment system shall be made with a pressure-rated feedthrough fitting.

3.4 The 4-inch x 4-inch x 4-inch junction boxes shall be installed at the location of each pressure-rated feedthrough fitting, 6-inch x 6-inch x 4-inch junction boxes shall be at the location of each branching connector installed outside of the annular space of the containment system. All junction boxes shall be type Nema 4X if installed above grade and type Nema 6 if installed below grade.

3.5 Upon completion of the handoff requirements per section 3.7 of the Mechanical Specification Supplement, sensing cable shall be installed in the annular space of the containment system. The sensing cable shall be installed in accordance with the manufacturer's instructions. No lubricant shall be used to assist in sensing cable installation.

3.6 As it is being installed, each section of the sensing cable shall be monitored with a portable test instrument to detect possible sensing cable damage and the presence of liquid(s) of the type to be detected (aqueous or hydrocarbon) in the annular space. During installation, sections of cable that indicate liquid(s) have been detected shall be removed and the condition reported to the mechanical contractor for correction. The sensing cable shall be installed from access to access. The installer shall ensure that there is a sensing cable connector at each access point and that there is sufficient service loop in the sensing cable to allow for its grade-level testing and maintenance.

WARNING! When performing this test use appropriate safety procedures for handling flammable fluids.

3.7 All accessories (including branching connectors, weighted lengths, and end terminations) necessary to complete the sensing cable system shall be installed in accordance with the project plans and the manufacturer's instructions.

3.8 Mapping the System. Upon completion of the system installation, the installer shall generate alarm readings at all access points, valve pits, sumps, or other accessible locations in accordance with the manufacturer's mapping procedure. Records of the sensing cable layout and mapping readouts shall be recorded on "as built" drawings as supplied by the mechanical contractor.

3.9 Acceptance Testing. Upon completion of the system installation, a factory preconnectorized five-foot length of sensing cable of each type installed shall be temporarily installed at the far end of each leak detection circuit. The aqueous chemical (or water) sensor shall be immersed in approximately one foot of water at a depth of 0.125-inch to confirm that an alarm is generated and the appropriate distance is indicated on the alarm module. The five-foot hydrocarbon sensor shall be tested in the same manner using the appropriate hydrocarbon and shall be discarded upon completion of the test. The installer shall perform and certify the tests in the presence of the owner's representative.

3.10 Containment Purging (aqueous systems only). Upon completion of all testing, removal of temporary sensing cable test sections, and system mapping, the annular space of the containment system shall be purged with -20°F dew-point air or dry nitrogen. The containment space shall be sealed after purging.

3.11 System Map. A graphic display map prepared from "as built" drawings shall be furnished upon completion. The map shall indicate the location of the sensing cable and landmarks such as equipment, piping access points, change of cable direction, and cable distance readings per the manufacturer's instructions. The map shall be mounted near the alarm module.

3.12 Commissioning. A commissioning/service form shall be completed by the installer or the leak detection supplier and signed off by the system owner. The commissioning procedure includes system measurements using a portable test instrument and an ohm meter to ensure a functional system.

7. Summary of Contractor Responsibilities

Installation of leak detection in double-contained pipe requires coordination of multiple trades. The general contractor shall ensure that mechanical and electrical contractors understand their responsibilities and that schedules are coordinated.

In the absence of a primary electrical contractor, the mechanical contractor shall utilize the services of a qualified electrician or subcontractor to install and commission the sensing cable and alarm module.

The responsibilities of the mechanical and electrical contractors are outlined in the sections that follow.

Mechanical Contractor's Responsibilities

The mechanical or piping contractor is responsible for the proper assembly and installation of the double-wall pipe system that will receive the cable-type leak detection system. These responsibilities are spelled out in detail in Section 5. They include the following procedures:

- Ensuring correct pipe sizing
- Selecting and installing centralizers
- Cleaning and drying the containment space
- Installing pull ropes
- Meeting all mechanical handoff requirements
- Providing "as built" drawings to the electrical contractor

Electrical Contractor's Responsibilities

The electrical contractor is responsible for installing the alarm module, sensing cable, and components according to the manufacturer's instructions. These responsibilities, detailed in Section 6, include the following procedures:

- Mounting the alarm module
- Providing electrical hookups
- Monitoring for moisture
- Providing for service loops
- Installing accessories
- Testing cable sections
- Mapping the system
- Conducting acceptance testing
- Purging the containment after final testing
- Sealing the containment
- Preparing a system map
- Commissioning the system

8. System Descriptions for Other Applications

Cable-type leak detection systems are also available for other applications. This section presents three of these applications:

- Double-contained tanks
- Pipe and tank combinations
- Trenches and sumps

Table 3 provides a matrix of system capabilities and applications that will help in the selection of products for various double-wall applications.

Table 3. Product Selection Matrix

	System Type			
	Long Line	**Zone**	**Multichannel**	**Single Channel**
Module type*	TTB	TTB	TTG	TTA-I-UL
General use	Large or long distance	Many discrete areas	Several discrete areas	Single area
Applications	D/C pipe/tanks trenches, subfloors	Multiple sumps, wet benches, valve boxes	D/C tanks, sumps,	Equipment, sumps
Max. number of sensing cables	2000-ft or 1000 m	50 points	12 points	1 point
Alarms on cable break	Yes	Yes	Yes	Yes
Single run of jumper cable	Yes	Yes	No	Yes
Max length of standard jumper cable	10,000 ft	10,000 ft	10,000 ft	10,000 ft
Relay contacts	SPDT	SPDT	SPDT	SPDT
Display	Feet/meters	Zone number	Channel lights	Light
Audible alarm	Yes	Yes	Yes	Yes
Approvals	UL, CSA- Ordinary Areas FM-Hazardous Location Class I, Div. 2, Gr A, B C, & D	UL, CSA- Ordinary Areas FM-Hazardous Location Class I, Div. 2, Gr A, B, C, & D	UL-Hazardous Location Class I, Div. 1 & 2, Gr. A, B, C, & D	UL-Hazardous Location Class I, Div 1 & 2, Gr A, B, C & D CSA- Ordinary Areas
Analog interface	Yes	Yes	No	No
Independent channels	No	No	Yes	Yes
Locates along sensor length	Yes	No	No	No
Branching capability	Yes	Yes	Yes	Yes

	Sensing Cable		
	TT3000	**TT501**	**TT502**
Fluid to detect	Any conductive fluid: acids, bases, industrial waste, leachate, water	Solvents TCE, trichloroethane, toluene, and others	Hydrocarbons and oils gasoline, diesel, hydrocarbon, JP-4, heating oil, motor oil, hydraulic fluid
Undetected fluids	Hydrocarbons or solvents	Water, acids, bases	Water, acids, bases

* For information on other TraceTek modules, consult factory

Double-Contained Tanks

Two sensing cables may be installed in the annulus between the primary tank and secondary containment:

- The hydrocarbon sensing cable will detect fuels or solvents entering from a break in the primary tank, yet will ignore the presence of water. The hydrocarbon sensing cable must extend the full height of the tank annulus to provide distributed coverage from the top to the bottom of the tank.
- The water (or aqueous chemicals) sensing cable will detect water entering from a breach in the secondary containment, yet will ignore the presence of fuels and solvents. The water sensing cable must be positioned at the bottom of the tank and be approximately three feet in length.

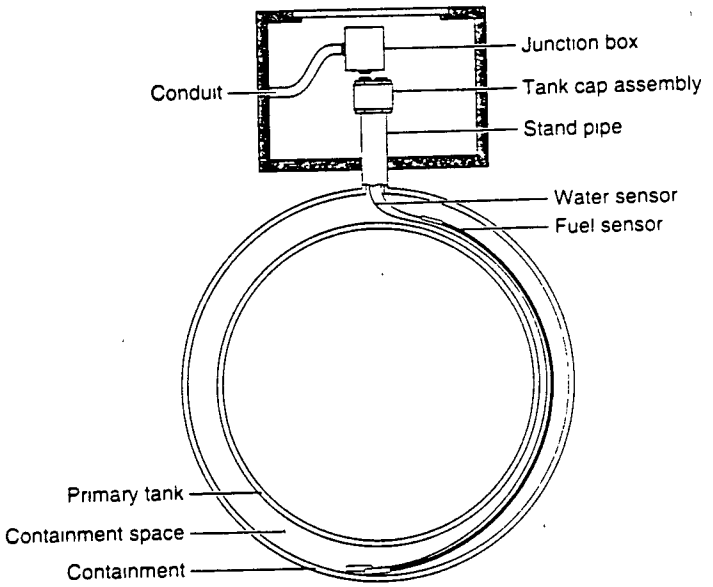

Fiberglass reinforced plastic tank

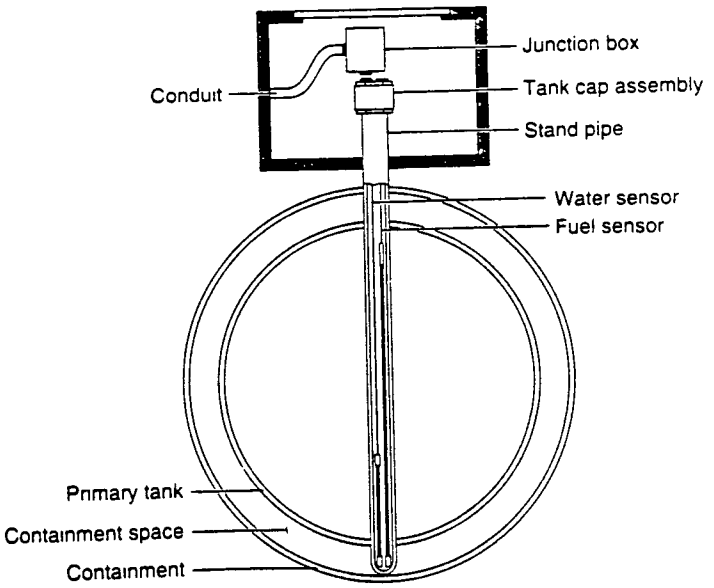

Steel tank

For tank applications requiring only one sensing cable, a tank cap assembly with a pressure rated feedthrough fitting is recommended.

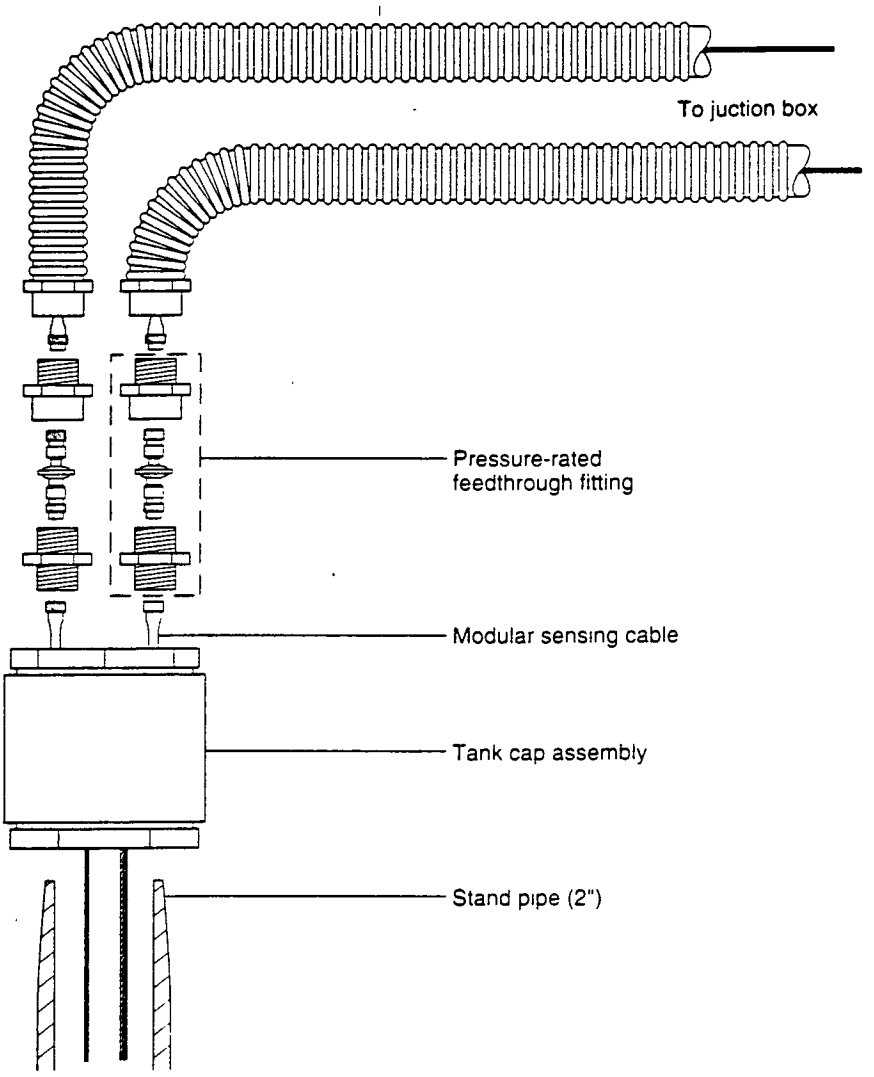

Tank cap assembly

Pipe and Tank Combinations

Double-wall pipe and tank combinations may be monitored from one locating alarm module by branching off from the main pipe run to the tank.

See the next page for a detailed view of the tank cap assembly.

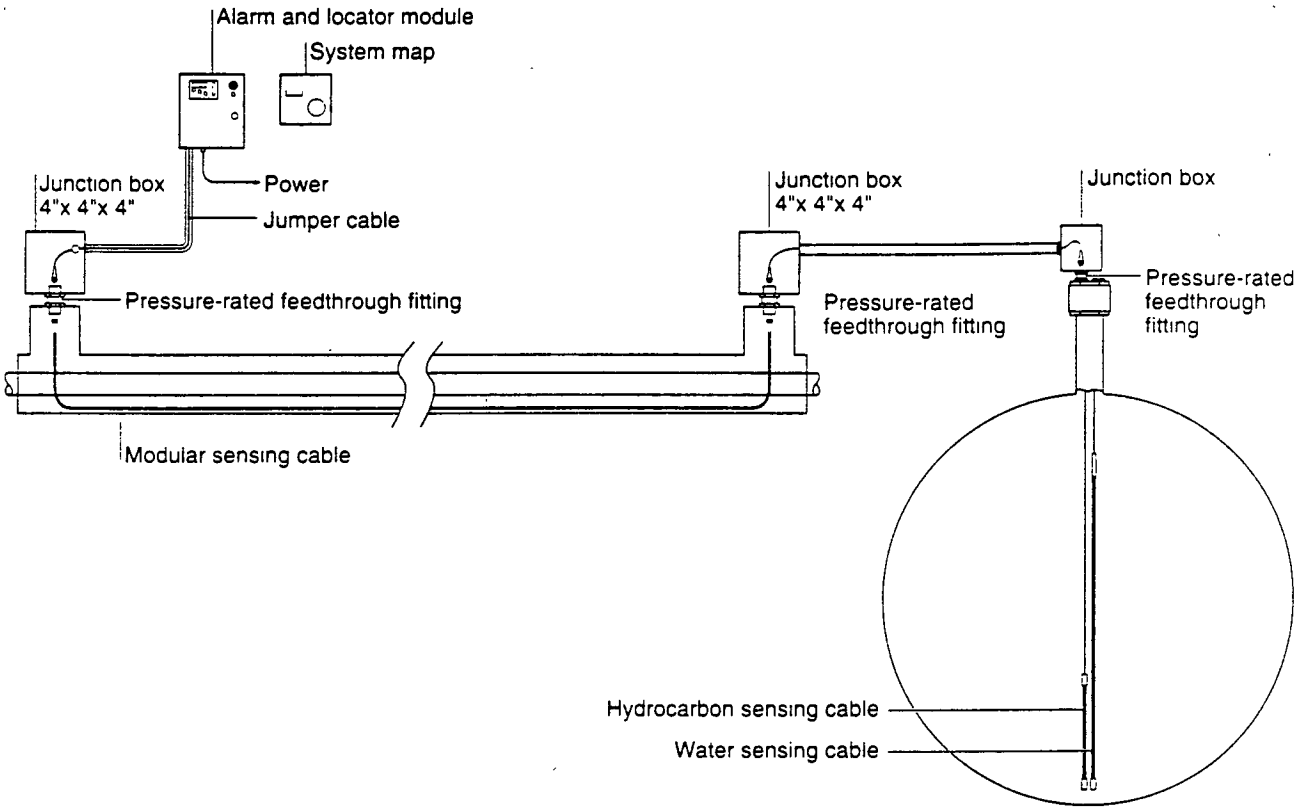

Pipe and tank combination

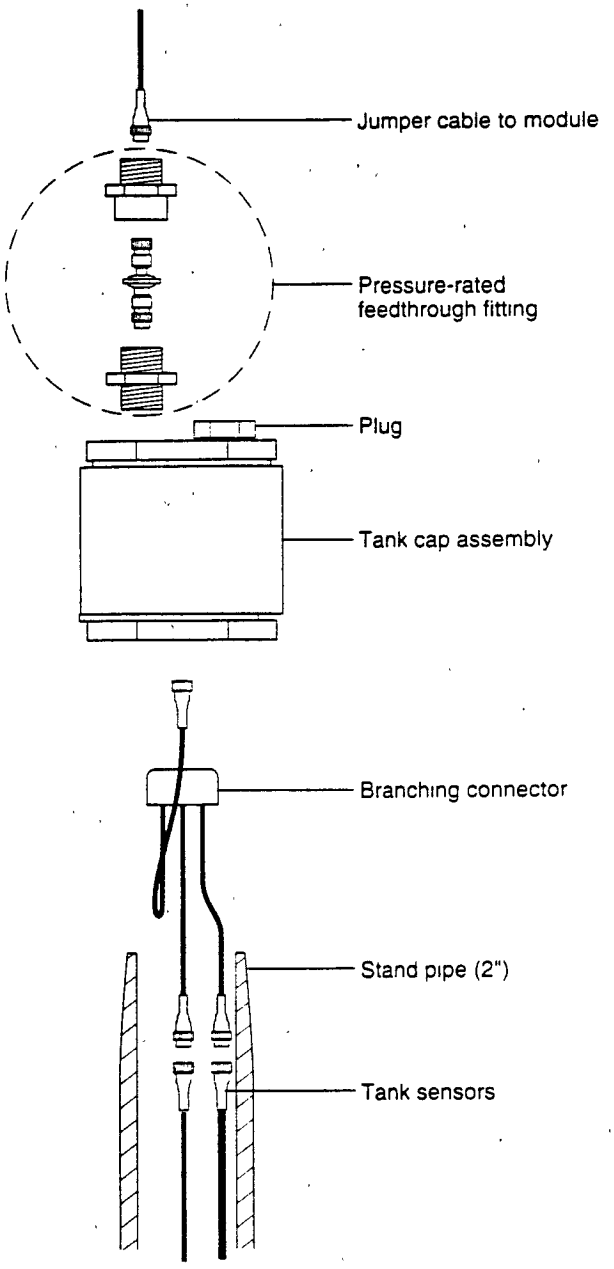

Detail of tank cap assembly with branch connector for mounting fuel and water sensing cables in double-wall pipe and tank applications.

Trenches/Sumps

In trench or sump applications, the sensing cable is laid in a zigzag fashion every four to six feet, or as appropnate.

Service loops are required at every sensing cable connection.

Hold-down clips are recommended to secure the cable in place.

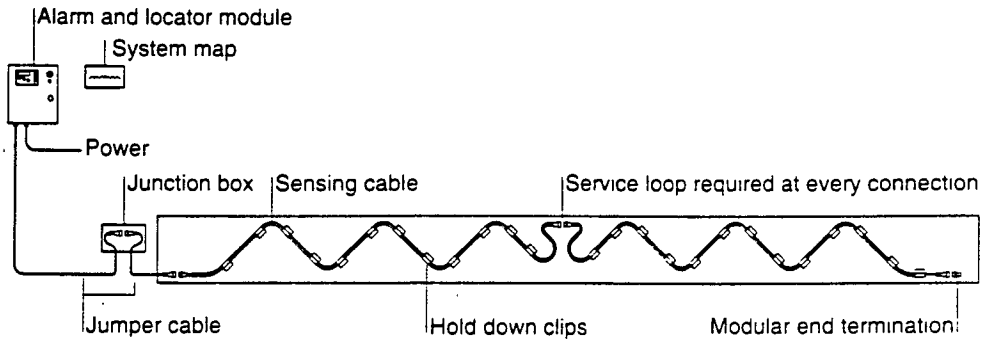

Pipes should be mounted to the side of the trench or laid on pipe racks in the trench. The sensing cable is then installed beneath the pipe racks with a minimum 0.75-inch clearance to allow removal of the cable, if necessary.

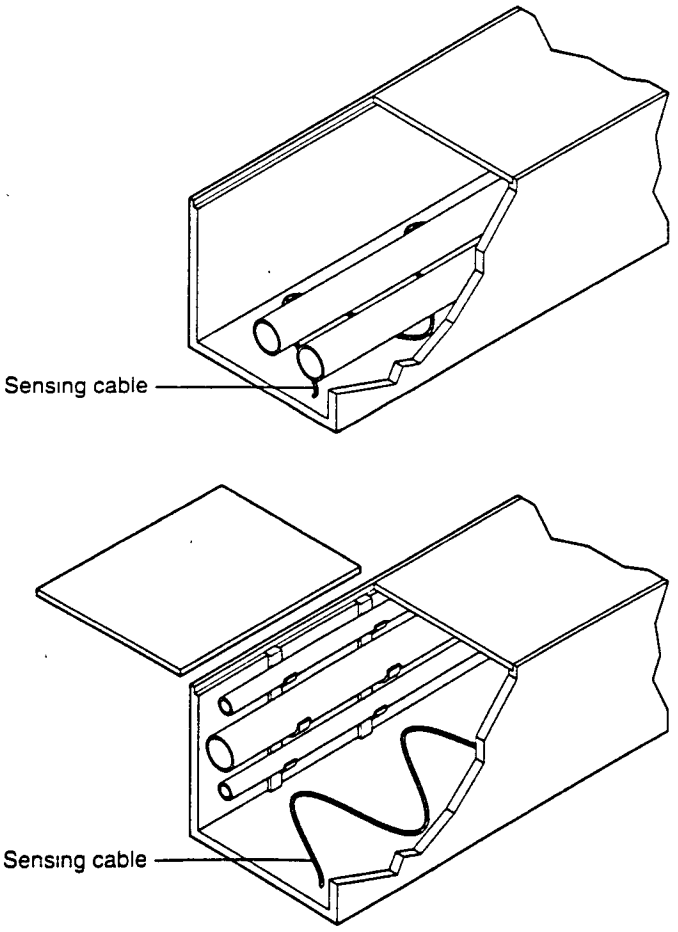

Trenches with racked pipes

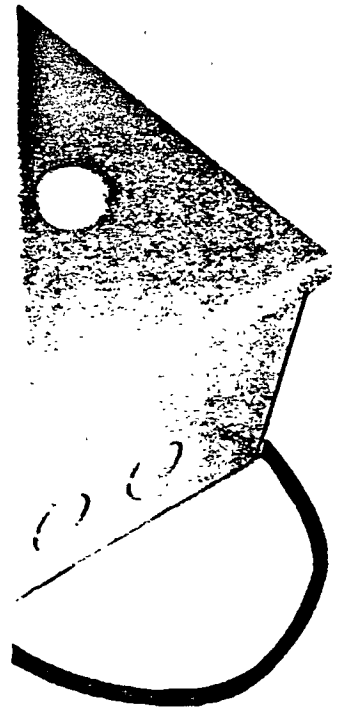

How TraceTek technology works

TraceTek sensing cable:

- Detects leaks at any point along its length.
- Has a fluoropolymer construction that resists corrosion, chemicals, dust, and dirt.
- Is supplied with low-profile, factory-installed connectors and modular lengths for easy installation.
- Can be cut to length and connectorized in the field.
- Allows for easy troubleshooting with an ohmmeter or portable test box during installation, because of its simple circuit design.
- Has uniform sensitivity all along the sensing cable length.

TraceTek alarm and locator modules:

- Offer simple, three-button operation, with no programming required.
- Continuously monitor the sensing cable for fault conditions and liquid spills.
- Work with custom system maps to precisely locate leaks.
- Allow for testing the entire system with the touch of a button.
- Permit adding to or enhancing a system without recalibrating or remapping.
- Provide clear displays that differentiate leak alarms from continuity faults.

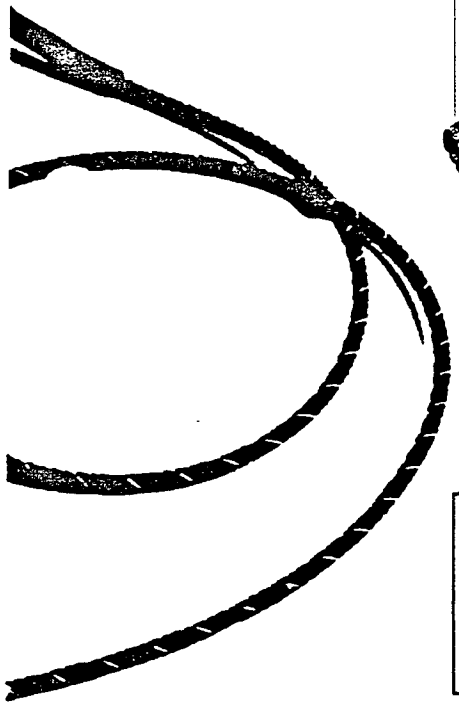

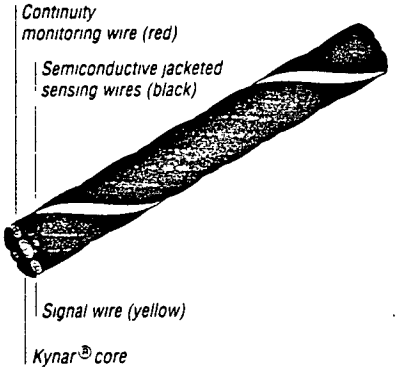

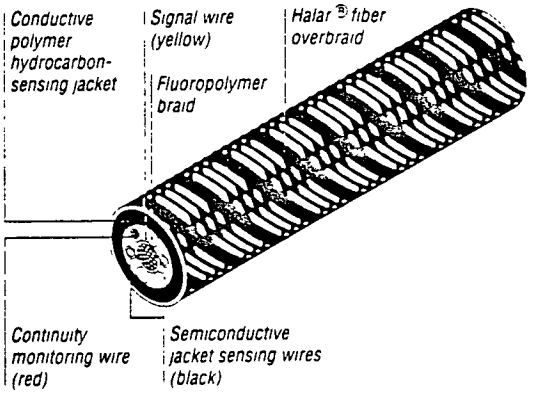

Sensing cables are specifically designed to detect either aqueous or hydrocarbon-based liquids.

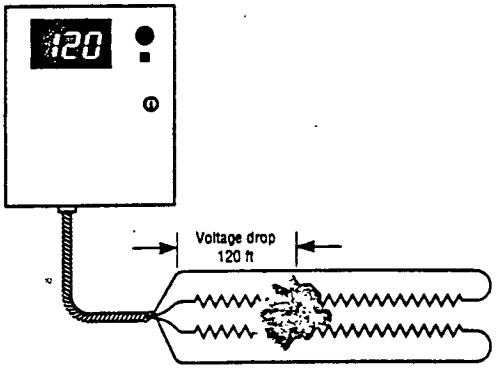

TraceTek alarm and locator modules provide alarm-only systems or systems that both set off alarms and pinpoint leak locations.

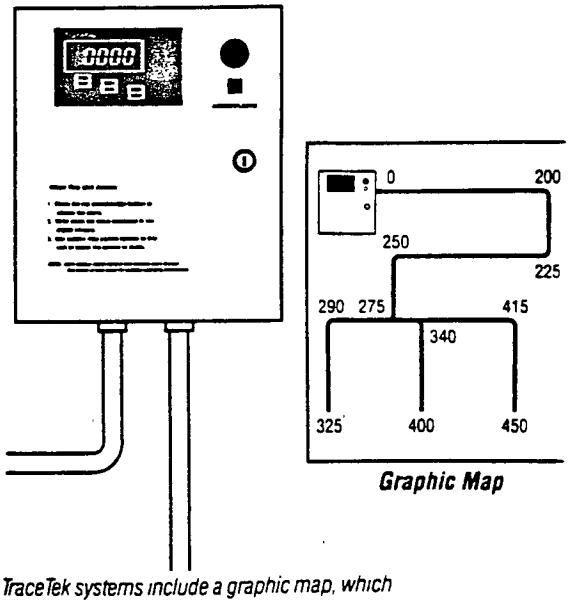

TraceTek systems include a graphic map, which shows clearly where the sensing cable is installed. A unique branching connector lets locating systems follow complex, branching pipelines.

Minimize downtime and costly cleanups

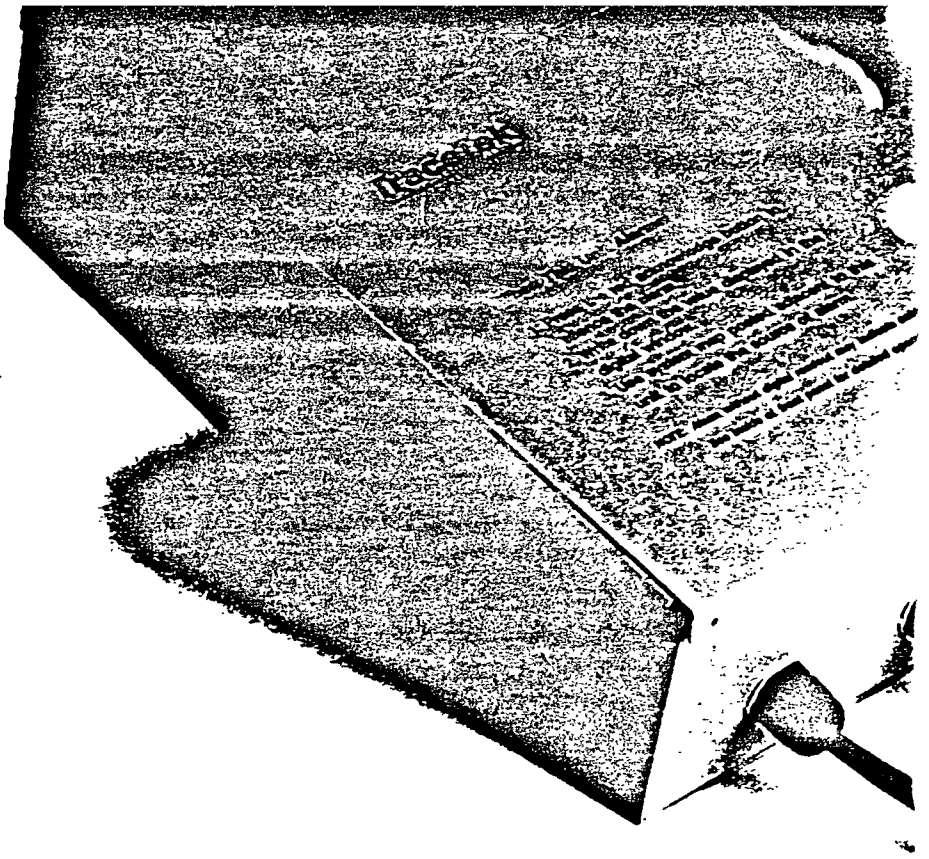

In today's industrial environments, fluid leaks and spills are inevitable—and they can be disastrous if not contained, discovered, and located quickly. That's why a reliable TraceTek leak-detection system is a smart investment.

With more than 10,000 leak-detection systems installed worldwide, Raychem is the leader in high-performance, easy-to-use leak-detection and locating systems. This proven conductive polymer technology detects even a small leak at any point along the length of the sensing cable, pinpointing its location.

Benefits of TraceTek technology

Reliability

- Simple circuit design
- Fluoropolymer sensing cable construction; corrosion resistant
- Proven technology from world leader in materials science
- Thousands of installations

Easy operation and maintenance

- Simple, easy-to-understand monitor panel
- Self-calibration
- Easy setup; easy changes
- Portable test box

Quick detection of leaks

- Continuous and distributed coverage—leaks detected at their source
- Prompt response—a trickle (not a flood) triggers alarm
- Uniform monitoring of every foot of pipe or specific zone

Precise location of leaks

- Fast, effective response
- Minimal downtime

Cost-effective performance

- Small investment relative to undetected-leak costs
- Variety of design options to meet project needs

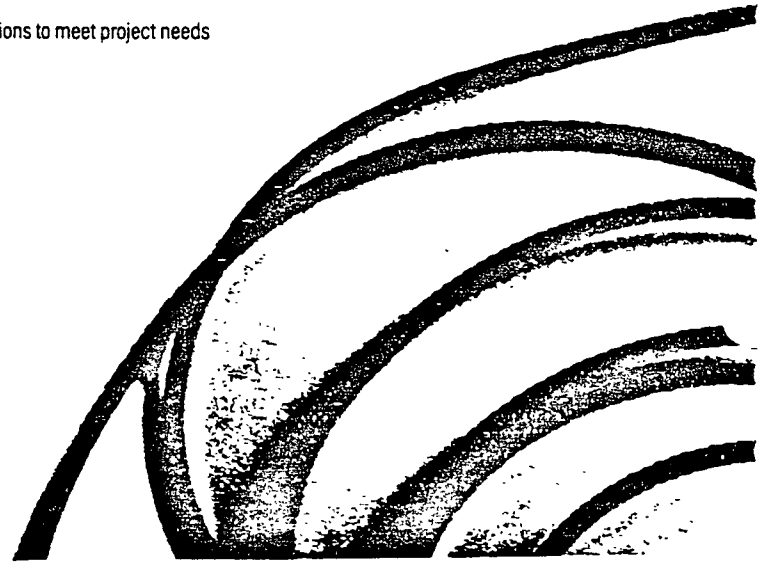

A full range of systems to meet various design needs

Locating system

- Finds leaks in concealed or inaccessible areas.
- Quickly pinpoints distance to leak to the nearest foot, permitting fast, accurate response.
- Monitors thousands of feet of sensing cable.

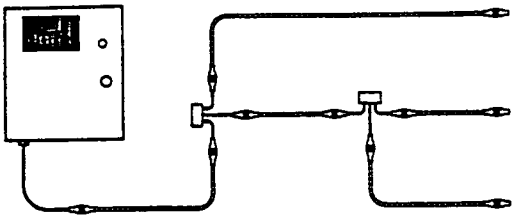

Zone system

- Provides single, central monitoring point for as many as 50 fixed-length sensing cables.
- Same system can monitor a variety of liquids.
- Single jumper interconnects all sensing cables, significantly reducing field wiring costs.
- Digital display identifies zone where leak occurs.

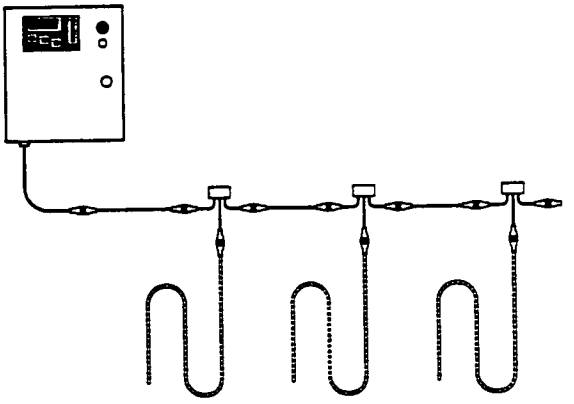

Nonlocating multiple-channel system

- Provides coverage for tanks or sumps where spills are likely.
- Independently monitors as many as 12 discrete sensing cables from a single monitoring panel.

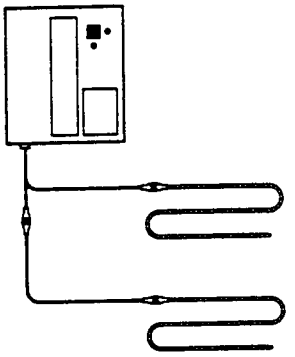

Nonlocating single-channel system

- Cost-effective for small installations.
- Provides coverage for single, small areas.
- Output relays allow control of auxiliary equipment.

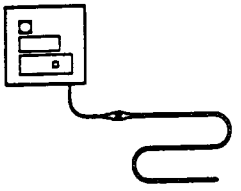

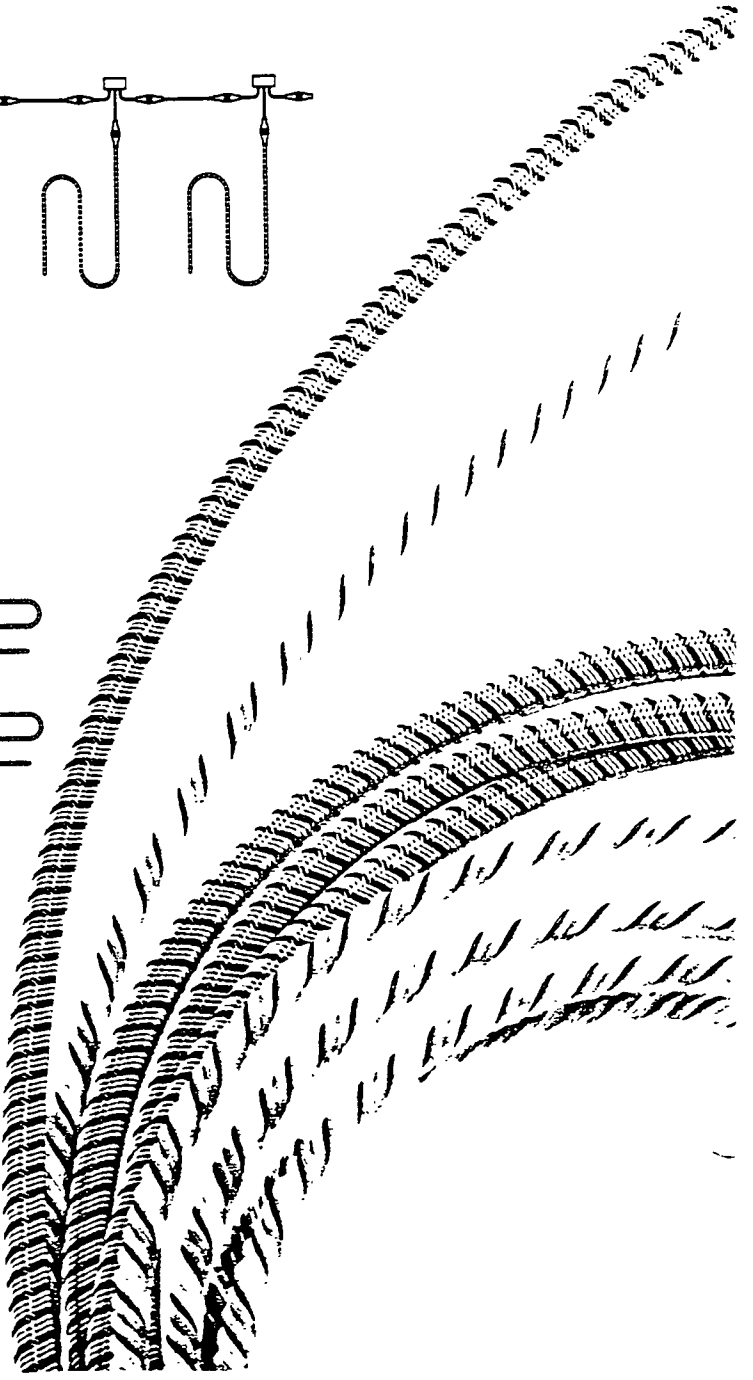

TraceTek Selection Guide

Select the system type that meets your application needs

	System Type			
	Locating			
Applications				
Area to be monitored	Large or long distances	Many discrete areas	Several discrete areas	Small area
Typical applications	D/C pipes, cleanroom floors, pipe trenches	Low points, wet benches, valve boxes	D/C tanks, sumps	Single pieces of equipment, vaults
Functions				
Continuous sensing	Yes	Yes	Yes	Yes
Alarm for presence of leak	Yes	Yes	Yes	Yes
Alarm for sensor damage	Yes	Yes	Yes	Yes
Monitoring for power loss	Yes	Yes	Yes	Yes
Relay contacts	One	One	One	One or two
Display	Distance	Zone number	Light for each channel	Lights
Audible alarm	Yes	Yes	Yes	• Yes (TTA) • No (TTC)
Cost Effective				
Maximum system size	• Multiples of 2000 ft (1000 m) • Custom panels available	50 zones @ 5 ft per zone	4 or 12 channels @ 25 ft per sensor	50 ft
UL Listed	Yes	Yes	Yes	Yes

Select the sensing cable that best meets your detection needs

	Sensing Cable		
	TT3000		
Fluids to be detected	Any conductive fluid: acids, bases, industrial waste, leachate, intruding ground water	Solvents: TCE, TCA, MEK, acetone, toluene, and other solvents	Fuels and oils: gasoline, diesel fuel, jet fuel, heating oil, motor oil, hydraulic fluid, and other hydrocarbons
Fluids not to be detected	Fuels or solvents*	Water, acids, bases, fuels	Water, acids, bases, solvents

TraceTek is a registered trademark of Raychem Corporation

Kynar is a registered trademark of Elf Atochem North America, Inc

Halar is a registered trademark of Ausimont U.S.A., Inc

Raychem Corporation is a broadly based, international materials science company that solves customer problems by developing new materials and finding new ways of using special materials.

High-performance Raychem products are used in many industries, including aerospace, construction, electronics, electrical power, process, and telecommunications.

Raychem worldwide sales and support

- Field service offices in 50 countries
- Manufacturing plants in 14 countries
- Research and development centers in 6 countries

Field Sales Offices

Raychem

Raychem Headquarters
Raychem Corporation
300 Constitution Drive
Menlo Park, CA 94025-1164
Tel (800) 545-6258
Fax (415) 361-3904

Raychem Corporation
2015 Spring Road
Suite 700
Oak Brook, IL 60521
Tel (800) 227-0105
Fax (708) 572-1469

Distributed by:

Printed on recycled paper

In cleanrooms, the sensing cable effectively monitors the subfloor area and equipment for spills and leaks of hazardous fluids.

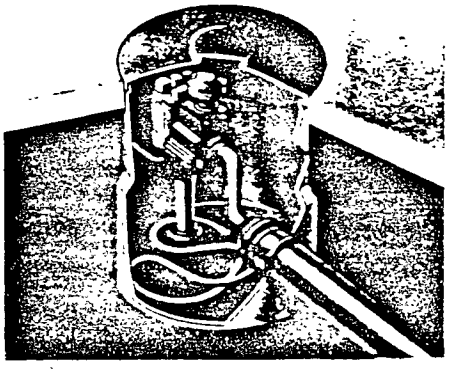

The single-channel system provides cost-effective leak detection and can be used for emergency-equipment control.

Raych m

TraceTek®

Leak-Detection and Locating Systems

Find leaks when there's no time to lose

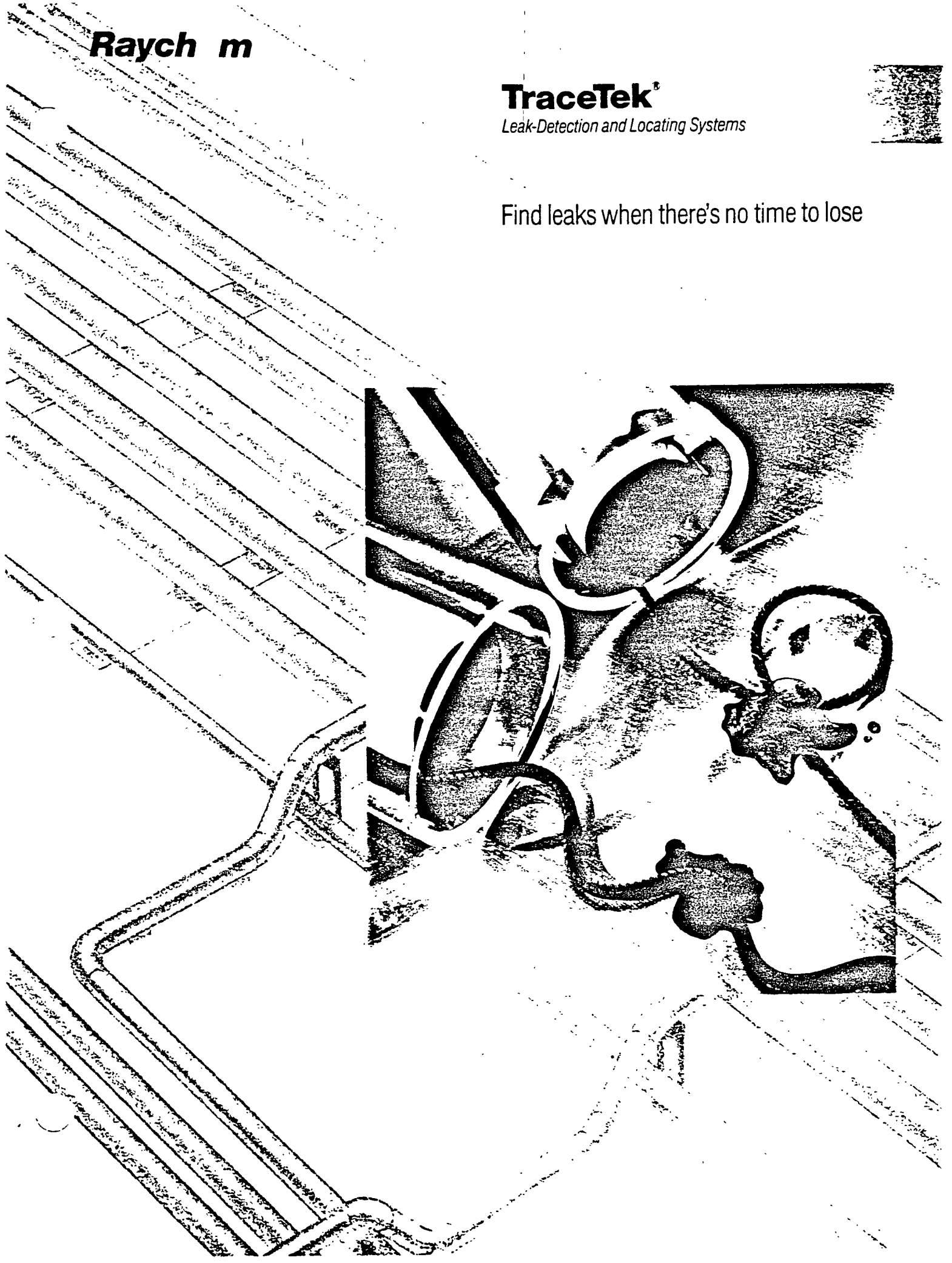

Apply TraceTek systems to any situation

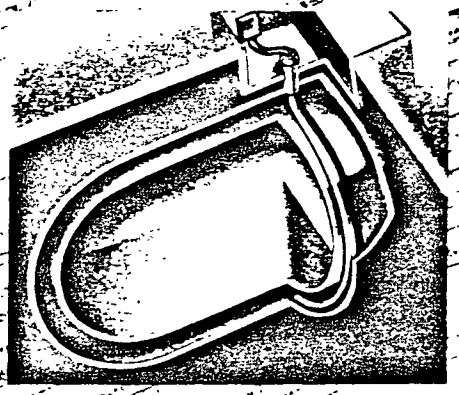

The zone system can monitor up to 50 separate tanks and sumps from a central location. A single jumper wire interconnects all sensing cables, simplifying the wiring back to the control panel. In applications that require monitoring of as many as 12 separate sensing cables, a centrally located multiple-channel system can be used.

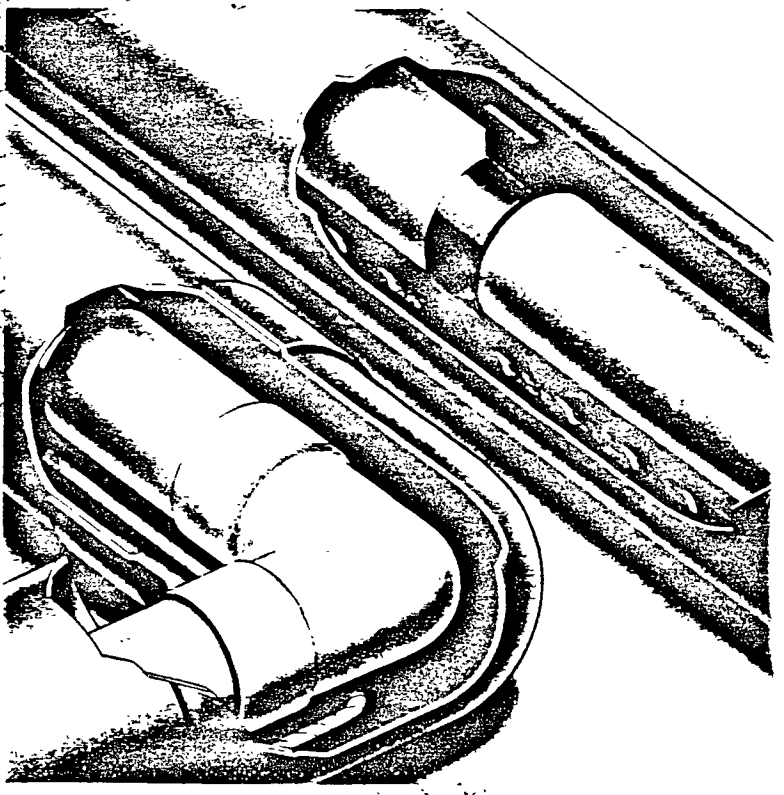

In double-wall pipe applications, the locating system is a perfect fit. The sensing cable installs easily in the pipe's annular space to provide complete coverage.

DRISCOPIPE®

Piping Systems

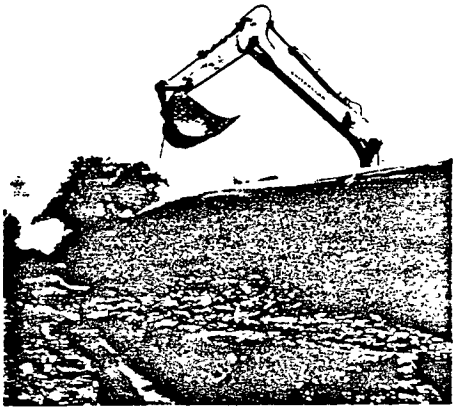
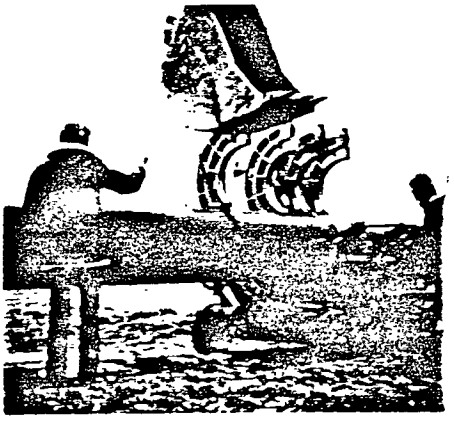

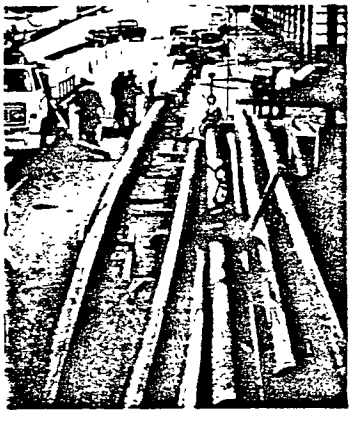
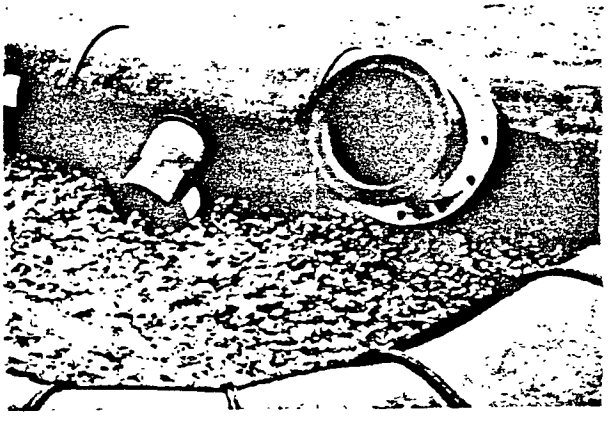

PHILLIPS 66

Contents

Introduction . . . 1
Driscopipe Materials . . . 2
Effect of Density . . . 2
Effect of Molecular Weight and Molecular Weight Distribution . . . 2
Identification and Standard Designation of PE Materials . . . 3
Identification by Cell Classification . . . 4
Driscopipe Systems . . . 5
Applications . . . 5
Benefits-Advantages-Cost Saving Opportunities . . . 5
Chemical Resistance . . . 6
Life Expectancy . . . 6
Lightweight . . . 6
Flow Factors . . . 6
Joining System . . . 6
Butt Fusion Equipment . . . 6
Toughness . . . 6
Abrasion Resistance . . . 7
Weatherability . . . 7
Pressure Capability . . . 7
Temperature Stability . . . 7
Temperature Response . . . 7
Fabrication . . . 8
Standards . . . 8-9

Photographs shown are typical Driscopipe installations.

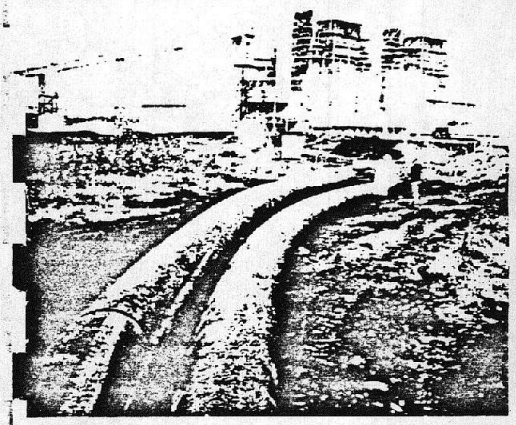

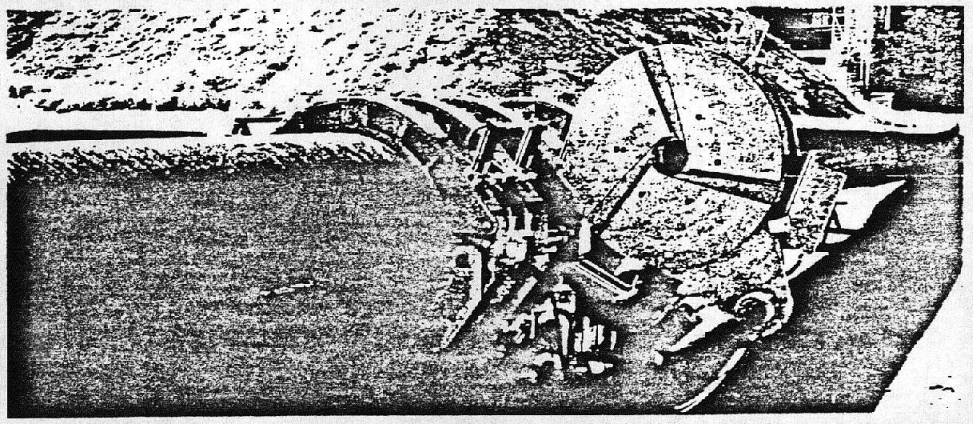

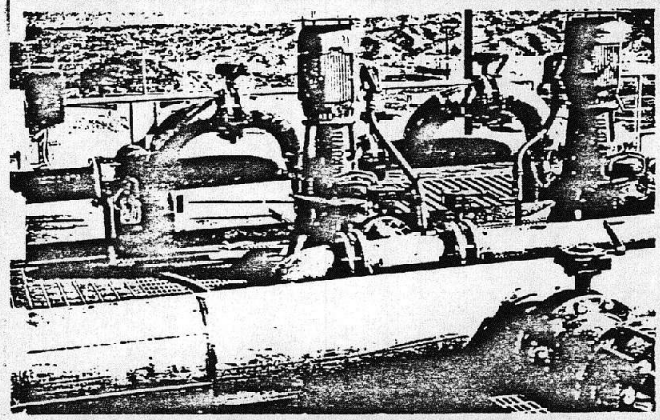

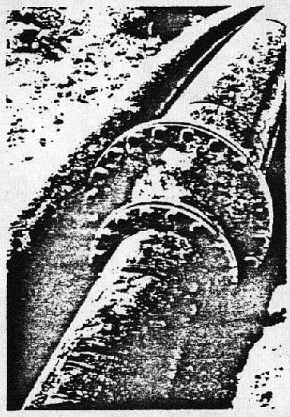

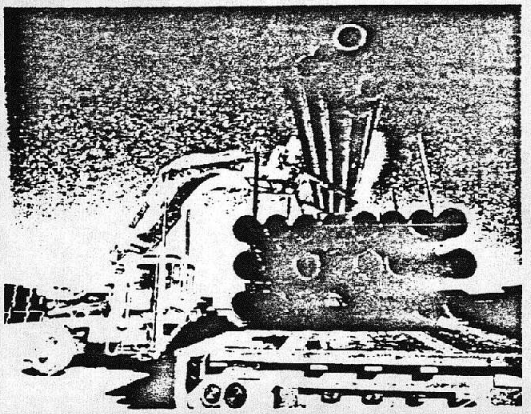

Driscopipe® Piping Systems

Introduction

Driscopipe high density polyethylene piping systems offer innovative new solutions to old materials handling problems. These piping systems give the modern engineer proven engineered solutions to many traditional problems and new applications.

The plastics industry is more than 100 years old, but polyethylene was not discovered until the 1930s. Early polyethylenes were low density and were used mostly for cable coatings. The high density polyethylenes utilized in today's modern piping systems were developed in the early 1950s.

Phillips Petroleum Company was one of the first major oil and gas producing companies to diversity in the petrochemical field to upgrade by-products of their producing and refining processes Phillips is one of the world's largest producers of polyolefin plastics as well as many other petrochemicals. Polymerization processes developed by Phillips are used world wide. Today, much of the world's high density PE is made by the Phillips process. It is through this leadership and long established technical know-how that specialized pipe resins were developed by Phillips.

Driscopipe Piping Systems are the result of a continued team effort by Phillips 66 Company and its subsidiary – Phillips Driscopipe, Inc. – to research and develop complete polyethylene piping systems of exceptional quality for demanding applications. Phillips 66 Company, takes raw natural gas liquid products produced by Phillips and converts them into base petrochemical feedstocks, such as ethylene. At the Houston Chemical Complex these feedstocks are converted into numerous polyolefin plastics which are sold under the familiar Marlex® trademark. Some of these Marlex resins are tailor-made for polyethylene pipe. For example, M-8000 is a very high molecular weight resin which is used to manufacture Driscopipe products which are extremely tough and durable. Phillips has developed special processing techniques and equipment for this resin which achieve finished products unmatched in the industry in quality, engineering properties and performance Phillips also makes lower molecular weight pipe resins for conventional extrusions.

Marlex resin was introduced in 1962, and the Driscopipe piping systems produced with this resin have been installed world wide. Literally, thousands of miles of this pipe are in service in hundreds of different industrial, municipal and general applications. Engineers have used Driscopipe to solve a wide range of problems related to cost, corrosion and serviceability which elude traditional materials.

Marlex M-8000 resin was introduced in 1978 and is an improved very-high molecular weight, high density polyethylene. It has all the original characteristics, yet has greater long-term hydrostatic strength, allowing greater design pressures. Product lines made from Marlex M-8000 resin include Driscopipe 8600 Industrial and Driscopipe 8000 Gas Distribution piping systems. Because of the special processing requirements, Marlex M-8000 is extruded only by Phillips Driscopipe, Inc.

Phillips Driscopipe, Inc. also offers product lines made of lower molecular weight polyethylene materials for use in those applications where job requirements are less demanding. These piping products are made by conventional extrusion methods from other pipe resins such as Marlex TR-480 and TR-418.

Phillips 66 Company and its subsidiary, Phillips Driscopipe, Inc., form a totally integrated effort from the natural resource raw materials at the well head to the finished piping product. This total organization has been developing, testing and providing high density polyethylene compounds, piping components and systems since the discovery of high density polyethylene.

When a Driscopipe System is installed, the owner acquires a product whose performance has been proven by long established technology, experience and reliability. A complete team of dedicated Phillips people stand ready to help solve your material handling problems.

Driscopipe Materials

The family of Marlex olefin polymers includes a complete range of low, medium and high density polyethylene and polypropylene. Tailored resins are specifically designed for blow molding, injection molding, thermo-forming, cable coatings, pipe extrusions, film, fiber, filament and other specific applications.

Marlex high density polyethylene is manufactured by the Phillips process at moderate pressures and temperatures. In the case of copolymers, ethylene and another olefin, such as butene or hexene, are dissolved in a solvent and the solution contacted by one of a variety of catalysts. Depending on the feedstock and the type of catalyst used, a copolymer is formed which varies in type and degree of chain branching of the molecules. The number of different resins which can be produced is almost limitless. Because of Phillips background in research and development of polymerization processes, it has historically been able to create resin with excellent balance of physical properties for specific applications.

Driscopipe systems are expected to give many years of trouble-free service when exposed to a broad variety of environments and working conditions. To meet such exacting requirements, Phillips developed several Marlex polyethylene pipe compounds. The service life characteristics of Driscopipe Systems are determined by the physical and chemical properties of the compound and the processing of each resin into a finished product. These systems are the result of years of development work aimed at producing polyethylene piping systems capable of meeting the most demanding requirements.

Effect of Density

Polyethylene materials are generally classified into three categories of low, medium and high density; also designated as Type I, II and III polyethylene, respectively. In recent years, only medium and high density polyethylene materials have been used for pipe. The introduction of high density polyethylene in the early 50s made it possible to achieve great improvements in physical properties of pipe as compared to the low and medium density products at that time. As density increases, tensile strength, surface hardness, stiffness, softening temperature and chemical resistance are all increased.

Effect of Molecular Weight and Molecular Weight Distribution

Following the discovery of high density polyethylenes, continued investigation revealed that further improvements in physical properties could be made by increasing the average molecular weight. Increased values are realized in melt viscosity, tensile strength, elongation, resistance to creep, impact strength, notch sensitivity, resistance to low temperature brittleness and resistance to environmental stress cracking. Through careful programming of the polymerization reaction, Phillips controls the density and the molecular weight to obtain polyethylene pipe compounds with exceptional service life performance

The plastics industry has always characterized polyethylene by molecular weight Most of the time this is done by measuring the melt viscosity of the resin, called melt index, which is related to the molecular weight. However, for those polyethylenes having a weight average molecular weight above 250,000, the "melt index" is zero For the group of resins with weight average molecular weights in the range of 250,000 to 1.5 million, a procedure known as "high load melt index" is used to characterize the particular polyethylene. The HLMI uses higher loads to measure the melt viscosity. Resins with molecular weights above 1 5 million are generally characterized by solution viscosity or other more sophisticated molecular weight determination techniques. The high load melt index test procedure used to identify Driscopipe is described in ASTM* D 1238

In addition to density and molecular weight, a third parameter, molecular weight distribution, is generally used to describe the resin. These three parameters determine the properties which a specific resin will have. In relating physical and chemical properties to density, average molecular weight and molecular weight distribution, it is an oversimplification to state that a property is dependent entirely on any one of them. It is true, though, that many properties are more dependent on one parameter than the other two, and for this reason some generalizations can be made The effects of increasing density, for example, were described earlier.

*ASTM – American Society for Testing and Materials

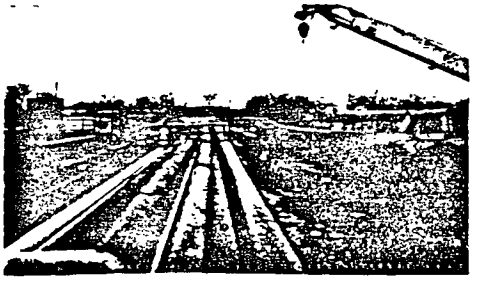

The effect of molecular weight and molecular weight distribution is more complex than density and can have various meanings. During the synthesis of these polymers, all the molecules do not grow to the same size. The size variation may be small or great depending upon the polymerization process involved. One of the terms most frequently used to describe the size variation is molecular weight distribution. Because of this size variation, these polymers do not possess a specific molecular weight in the usual sense of a pure compound. Instead, the molecular weights are at best only average values. When discussing the molecular weight of polyethylene, one of three types is usual: number average molecular weight, weight average molecular weight or viscosity molecular weight. All expressions are determined differently by exacting analytical procedures. Generally, molecular weight and molecular weight distribution have the following effects:

Property	As Average Molecular Weight Increases (Melt Index Decreases)	As Molecular Weight Distribution Broadens
Melt Viscosity	Increases	–
Tensile Strength at Rupture	Increases	No Significant Change
Elongation at Rupture	Increases	No Significant Change
Resistance to Creep	Increases	Increases
Impact Strength	Increases	–
Environmental Stress Cracking Resistance	Increases	Increases

Identification and Standard Designation of PE Materials

Polyethylene piping materials for many years have been identified by a material code designation defined in ASTM Standard D 1248 entitled "Polyethylene Plastics Molding and Extrusion Materials". The code consisted of two letters, "PE" for polyethylene, and four arabic numbers. Originally, the first number designated the type PE, i.e., Type I or II or III which identified the material as low, medium or high density PE. The second number designated the Grade, which further identified the PE by other properties such as chemical resistance. The last two numbers of the code represented the hydrostatic design stress rating at 73.4° F for the pipe product. Thus, a polyethylene pipe designated as PE 3408 was a high density (Type III), Grade 3 product with a design stress rating of 800 psi.

ASTM D 1248 has been revised several times during the past few years and the code designations have been changed to better meet the needs of the industry

In the Standard's current issue, polyethylene piping materials are defined by:

(a) Type
Identification by nominal density (g/cm^3).

Type I (0.910 to .925) – Low Density

Type II (0.926 to .940) – Medium Density

Type III (0.941 to 959) – High Density

Type IV (0.960 & higher) – High Density The density shown is for uncolored PE. Please note that Type III and IV are still described by the term, High Density

(b) Class
Identification by composition
Class A – Natural color only

Class B – Colors, including white and black

Class C – Black (Weather Resistant) containing 2% or more Carbon Black.

(c) Category
Identification by nominal flow rate; g/10 min at 190°C, 2160 grams load
Category 1 – >25
2 – >10 to 25
3 – >1.0 to 10
4 – >0.4 to 1 0
5 – 0.4 Max

The nominal flow rate is also known as the Melt Index.

(d) Grade
Identification by other key characteristics such as tensile strength, elongation, brittleness temperature and stress crack resistance as set out in the standard:

For example:

Property	Grade P24	Grade P34
Tensile Strength, psi	1800	3200
Elongation, %	400	500
Brittleness Temp, °C	–60	–70
Environmental Stress Crack Resistance, hrs., F_{20}	192	192

Conditions of test and requirements for these minimum values are set forth in ASTM D 1248.

By designations defined in ASTM D 1248, Driscopipe 8600 and 1000 are identified as Type III, Class C, Category 5, Grade P34 (IIIC5 P34) polyethylene compounds.

Clarification is needed regarding two parts of this designation; category and grade.

Driscopipe 8600 is of such high molecular weight that the melt flow is zero at the test conditions set forth for Melt Index. The melt flow for Driscopie 8600 can be measured by increasing the load conditions of the test (High Load Melt Index – Condition F).

When revising ASTM D 1248, effort was made to match the old pipe designations (PE2306, PE 3306, etc.) with those same ones in the new identification systems. Thus, a Grade P24 is still a Type II (medium density), Category 5 material. However, Grade P34 is an exception since it identifies a Type III material of a grade not previously specified (very high molecular weight).

Current material designations are generally shown in the product standards by a method which combines the old and new systems of D 1248, i.e., Grade P24 is PE2406 and Grade P34 is PE3408. The old style designation is nearly always used in the markings on the product.

In 1974, ASTM wrote a new materials standard (ASTM D 3350) "Polyethylene Plastics Pipe and Fittings Materials" specifically for polyethylene pipe and fittings materials primarily because the old system (ASTM D 1248) does not adequately describe the different PE pipe materials. This is particularly true in the case of Grade P34 resins.

ASTM D 3350 uses a cell classification system to designate the PE pipe and fittings materials. This system provides for more specific identification of the PE compound by using cell classification limits for density, melt index, flexural modulus, tensile strength, environmental stress crack resistance and hydrostatic design stress at 23° C (73.4° F). Provisions are made to designate color, and design stresses at elevated temperatures are recognized. Use of the new cell classification tells more about the PE compound than does the old system, and this can help assure the user of receiving the quality of product desired.

The designation PE3406 was first recognized in ASTM standards in 1968. Since that time, PE3408 has become recognized throughout the industry as a premium quality material representing exceptional performance . . . primarily for two reasons . . The recognition of Grade P34 to designate a very high molecular weight polyethylene material and the outstanding success of Marlex M-8000 resin sold as Driscopipe.

Identification by Cell Classification

By the cell classification system of ASTM D 3350, Driscopipe 8600 is a PE355434C which describes this compound as having the following primary properties:

Property	Cell Classification
1 Density, g/cm^3 (Base resin)	.941 – .955 (cell 3)
2. Melt Index, g/10 min	<4.0 Condition F Method D 1238. (cell 5)
3 Flexural Modulus, psi	120.000 to 160.000 (cell 5)
4. Tensile Strength @ Yield, psi	3000 – 3500 (cell 4)
5 Environmental Stress Crack Resistance F_{20}, hrs, min.	Test Condition C. 192 hr. (cell 3)
6. Hydrostatic Design Basis @ 23°C (73.4°F), psi	1600 (cell 4)
7. Color & UV Stabilizer Code	C (Black with 2% minimum carbon black)

Although the cell classification system is an improvement, it does an incomplete job of describing Driscopipe 8600 The highest cell requirements for ESCR (Property no. 5) is that the PE material not have more than 20% stress crack failures in ten (10) samples after 192 hours at 100°C. Although most PE3408 and PE2406 materials pass this test . . . Driscopipe 8600 has been tested for more than 10,000 hours . . . with zero (0) failures . and the tests are continuing with no indication that failure will occur. No ESCR test procedure has yet been devised which causes Driscopipe 8600 to fail. This super resistance to stress-crack failure is a quality which is unique. This is also reflected in the pipe ring ESCR test described in ASTM F 1248. Driscopipe 8600 has surpassed 10,000 hours in this test with no failures

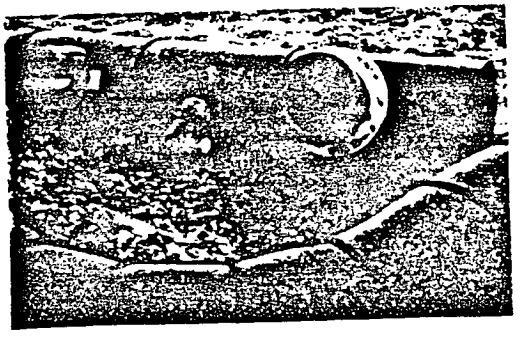

Driscopipe Systems

The objective of Phillips Driscopipe is to offer safe, reliable and economical piping systems to provide effective solutions to material handling problems. These polyethylene systems are usually selected for the job because they offer advantages not available through the use of other materials. However, to obtain long reliable service life from a polyethylene piping system, the user must be careful to select high quality systems.

Phillips Driscopipe, Inc. offers a complete line of pipe, fittings, accessories, technical and installation service through qualified and experienced distributors. Through the efforts of this entire organization, a very long list of satisfied users, both large and small, have found effective, reliable solutions to their piping applications, attesting to the high quality of these systems. Millions of feet of Driscopipe are installed every year in hundreds of different applications, *and the incidence of failures in these piping systems since the early 60s is insignificant.* This outstanding record of success emphasizes the unusual quality and engineering properties of Marlex resins, the quality controlled proprietary production methods of Driscopipe piping systems, and the high integrity and reliability of the butt fusion and side-wall joining methods for these systems. All these features are successful developments of the Phillips family of companies.

Driscopipe Systems include:

- A complete range of pipe and fittings sizes and design pressure ratings
- Trained, qualified distributors.
- Technical service assistance for systems design, installation and on-the-job consultation.
- Readily available installation equipment.
- Continual product research, development and testing.
- Economical product availability through strategically located plants throughout the U.S.
- Quality Assurance
- Custom design and fabrication of non-standard and special components.

Current brochures regarding available components included in the Driscopipe systems are available upon request.

Applications

Driscopipe is being used successfully in hundreds of industrial, municipal, mining, general and very specialized applications. These consumers have chosen Driscopipe polyethylene piping because it offers a combination of special engineering characteristics to solve difficult and specialized material handling applications or offers special cost-saving solutions to otherwise expensive installations.

Typical applications include the use of Driscopipe to handle corrosive waste, erosive waste, sewage, drainage, chemical process fluids, mine tailings, acids, caustic solutions, sludge, process and potable water, saltwater, corrosive gases, slurries, mud, crude oil, etc.

These fluids are handled at temperatures from below freezing up to 180°F and at pressures from 0 psi to 265 psi, both above and below ground.

Industries that are using Driscopipe include petroleum refining, petrochemical manufacturing , oil and gas production, hard and soft rock mining, paper and pump mills, power generation, sewage treatment plants, automotive manufacturing, farming, breweries, municipalities, metals manufacturing, food processing, fertilizer, chemical processing, and gas utilities.

One of the most important uses of Driscopipe in many of these industries is for the renewal of leaking, cracked, deteriorated or corroded lines through the unique, cost effective slip lining technique. Slip lining is especially adaptable with Driscopipe because of the extreme toughness and abrasion resistance of this material, its flexibility and the reliability of the butt fusion joining system.

The slip lining technique is widely used in both municipal and industrial applications. Rehabilitation in this manner minimizes downtime in operations, reduces installation costs, eliminates costly excavations and disruptions, and can result in substantial cost savings over direct replacement. Lining an existing system with a Driscopipe liner will reduce the inside diameter, but flow capacity will not necessarily be reduced. In fact, it may be increased due to the extremely smooth inside surface which offers much lower resistance to flow. This surface will remain smooth as it does not corrode, pit or deteriorate due to corrosive liquids or gases.

Benefits – Advantages – Cost Saving Opportunities

When compared to the traditional piping materials, Driscopipe high density polyethylene piping systems offer significant cost savings in installation labor and equipment, proven engineered solutions and freedom of design, reduced maintenance cost, and extended life for most pipeline systems. These benefits, advantages and cost saving opportunities are derived from the basic and unique properties and characteristics of Driscopipe.

Contents

Preliminary Design Data . . . 1
- Fluid Properties . . . 1
- Pipeline Life Requirements . . . 1
- Operating Pressure/Vacuum . . . 2
- Temperature Range . . . 2
- Flow Requirements . . . 2
- Installation Considerations . . . 3
- Contingency and Risk . . . 4

Five Step Design . . . 5

Step One: System Flow Requirements . . . 5
- Pressurized Full Flow . . . 5
  - Initial Flow Estimates . . . 6
  - Selection Based On Pressurized Flow . . . 6
  - Fitting Pressure Drop . . . 9
  - Pressure Loss For Viscous Fluids . . . 10
  - Design Precautions . . . 10
- Gravity Flow . . . 12
  - Full Flow . . . 12
  - Partial Flow . . . 14
- Slip Lining Flow Capacity . . . 15
- Slurry Critical Flow . . . 18
  - Flow Phases . . . 18
  - Critical Velocity . . . 18
  - Critical "Transition" Velocity . . . 19
  - Critical "Deposition" Velocity . . . 19
  - Dual Character Slurry . . . 20
- Abrasive Materials Handling . . . 20
- Corrosive Materials Handling . . . 20
- Gas Flow . . . 20

Step Two: System Life Expectancy . . . 21

Step Three: System Pressure Requirements . . . 21
- Positive Pressure Pipelines . . . 21
  - Steady State Internal Pressure . . . 21
  - Water Hammer/Pressure Surge . . . 23
  - Cyclic Overpressure . . . 24
  - Longitudinal Stress From Internal Pressure . . . 24
- Non-Pressure Pipelines . . . 24
- Vacuum or Suction Pipelines . . . 24
- Fittings . . . 26

Step Four: Thermal Consideration . . . 27
- Pipe Pressure Ratings . . . 27
- Thermal Conductivity . . . 27
- Thermal Stress Relaxation . . . 27
- Thermal Expansion and Contraction . . . 28
- Transition Connections . . . 29

Step Five: Installation Design . . . 32
- Type 1: Supported Pipelines . . . 32
- Type 2: Overland Pipelines . . . 33
- Type 3: Buried Pipelines . . . 34
  - Introduction . . . 34
  - Design Considerations . . . 35
    - Design By Wall Crushing . . . 37
    - Design By Wall Buckling . . . 37
    - Design By Ring Deflection . . . 38
    - Test Performance of Direct Burial Driscopipe . . . 39
    - Soil Density and Compaction . . . 40
    - Minimum Cover . . . 40
  - Calculation of Total External Soil-Pressure By Components . . . 41
    - Total Static-Load Pressure . . . 41
    - Total Live-Load Pressure . . . 43
    - Total Vacuum-Load Pressure . . . 44
    - Summary . . . 45
  - Burial Design Guidelines/Problem . . . 46
  - Summary . . . 47
- Type 4: Marine Pipelines . . . 48
  - Critical Collapse Pressure . . . 48
  - Anchor Weights . . . 48
  - Anchor Spacing . . . 50
- Type 5: Water Surface Pipelines . . . 50
- Type 6: Marsh Pipelines . . . 50
- Type 7: Insert Renewal Pipelines . . . 50
  - Introduction . . . 50
  - Performance Capability . . . 51
  - Safety Factor . . . 51
  - Summary . . . 52

Appendix . . . 53
- Resistance Of Valves And Fittings To Flow Of Fluids . . . 52
- Derivation: Manning Ratio For Equal Sewer Flow . . . 53
- Special Fitting Nomenclature . . . 54
- Installation Precautions for Fabricated Fittings . . . 55
- Manhole Connections . . . 56

Photographs shown are typical Driscopipe installations.

DRISCOPIPE

Driscopipe® Systems Design

Introduction

This manual presents design parameters applicable to the design of Driscopipe Polyethylene Pipe Systems, including applications and installations. It is a compilation of extensive research, field performance data and mathematical derivations supported by laboratory investigations. It is offered as information for your consideration in specifying Driscopipe It is intended to be an aid to, but not a substitute for, your own investigation and evaluation of the product in each application or installation. As you proceed with your design, questions may arise Your Driscopipe representative will be quite willing to answer your questions and discuss your needs

Preliminary Design Data

The industries served by Driscopipe are quite diverse The applications within each industry are extensive and can be demanding Some are simple and straightforward Others are complex and may require considerable thought even beyond the scope of this manual

Since Driscopipe offers the advantages of flexibility, resiliency and toughness, it differs from rigid plastic and steel pipe in some pleasant ways. Driscopipe pipe by itself is strong, extremely tough and very durable It can stand alone or be considered as a portion of the environment. Each installation becomes a "system" within the environment, can gather additional strength from its surroundings and is responsive to changes in its physical environment.

Proper system design should give consideration to the following six design criteria.

Fluid Properties

Compatibility There are many chemical handling problems which can be solved with Driscopipe.

It is one of the most chemically resistant plastics commercially available. Because of its inherent chemical composition and structure, Driscopipe does not react with most products being pumped. It is virtually inert. There are only a very few strong chemicals which affect it. When reviewing the chemical compatibility charts presented in the *Engineering Characteristics* brochure, it is helpful to keep the following three factors in mind.

1. The chemical resistance of Driscopipe is related to the chemical itself, the operating temperature and the concentration of the chemical.
2. Strong oxidizing agents such as nitric acid, sulfuric acid, chlorine gas and liquid bromine are most aggressive and deserve special consideration (See Chemical Resistance charts – *Engineering Characteristics* brochure.)
3. Permeation of the pipe wall is negligible for most products However, aromatic hydrocarbon permeation rates should be reviewed

Specific Gravity. A close approximation should be made of the fluid's density or specific gravity for later use in flow calculations and/or installation calculations

Viscosity Some measure of the fluid s viscosity should be made or approximated over the system s operating temperature range Flow and pressure calculations are related to this property For example if oil is the medium being pumped during summer and winter at constant pressure, the winter output (flow) decreases as its viscosity increases (ie: gets colder)

Solids Content: Driscopipe is used to convey many slurry mixtures Some are primary processing pipelines. Some are secondary waste conveying pipelines The system designer should consider the slurry solids content, its particle structure, abrasiveness, size distribution, net specific gravity, etc

Pipeline Life Requirements

A determination should be made of the estimated "life" of the installed pipeline. For example, a city sewer system should have a minimum 50 year life A temporary, gravity-flow, mine "tailings" slurry line may need be of service only five years before operations are moved. A specialized chemical process plant may be obsoleted or renovated in 15 to 20 years due to technology changes. Different design parameters are allowable dependent upon maximum operating conditions and expected "life".

Operating Pressure/Vacuum

Operating Pressures: In considering the design limits for a Driscopipe system, the design engineer should recognize the interdependence of the operating pressure, the operating temperature, the safety factor and the expected life Since few pipelines operate at a stable pressure, the engineer should estimate the operating pressure range The design should consider the highest long term operating pressure with recognition given to the additional safety factor gained at lower operating pressures

Surge Pressures (Water Hammer) Special consideration should be given to pressurized systems with valving or shut-offs. "Quick" operation of a valve may convert the mass inertia of the flowing stream into a high static head on the pressure side of the pipeline Because of the flexibility, resilience and toughness of Driscopipe it is able to absorb significant surge pressures. As with all systems, limitations in this area should be examined

Vacuum. A vacuum system is a special application for any HDPE pipe Vacuum systems using Driscopipe have operated successfully for many years However, due to the long term "creep" properties of polyethylene, only specific SDRs should be used. In certain full flow gravity feed lines, a siphon or vacuum condition can develop when sudden changes in elevation are encountered

The Driscopipe system must be engineered either sufficiently strong to prevent pipe collapse, or, in gravity flow situations, the vacuum can be "broken" by such means as an air intake valve Refer to the section on vacuum or suction pipelines to review Driscopipe vacuum capabilities

Temperature Range

Fluid Temperature Range The temperature of the fluid being conveyed will have an effect on the service capability of Driscopipe. As with all thermoplastic piping, polyetnylene pipe loses stiffness and tensile strength as temperature increases As temperature rises, the normal operating pressure of the pipe should be derated. Or, a heavier wall pipe can be specified to hold the same pressure at higher temperatures

As the temperature decreases, the pipe gains strength. The pipe may be designed to hold rated pressure at 73 4°F with recognition of a greater safety factor at lower temperatures. Driscopipe keeps its flexibility and integrity down to − 180°F The "rule of thumb" high temperature limit on a Driscopipe pressurized system is 140° to 150°F Non-pressurized, gravity-flow systems for fluids at temperatures between 150° to 180°F may be considered under special circumstances

Allowances for thermal expansion and contraction should be engineered into any installation based upon the fluid or environmental temperature

Environmental Temperature Range. An installation of a Driscopipe system in the desert with a daily temperature range of 100°F obviously must differ from an installation below the frost line of a frozen tundra.

The point is that both the fluid temperature *and* environmental temperature must be considered in determining which SDR to specify, as well as in compensating for thermal expansion and contraction

Flow Requirements

Driscopipe has a smooth wall Because it is smoother than steel or concrete, it will convey more Compared to steel or concrete, a smaller Driscopipe line or pipe can carry an equivalent volumetric flow rate at the same pressure This makes it ideal for relining pipes while maintaining identical flow capabilities Also, the pressure drop per 100 feet is less than other materials Driscopipe conserves energy Generally speaking, the volumetric flow rate can be calculated using the formula and tables presented in the *Five Step Design* section Driscopipe 8600 and 1000 both meet the requirements of NSF for potable water applications. See your Driscopipe Representative for details.

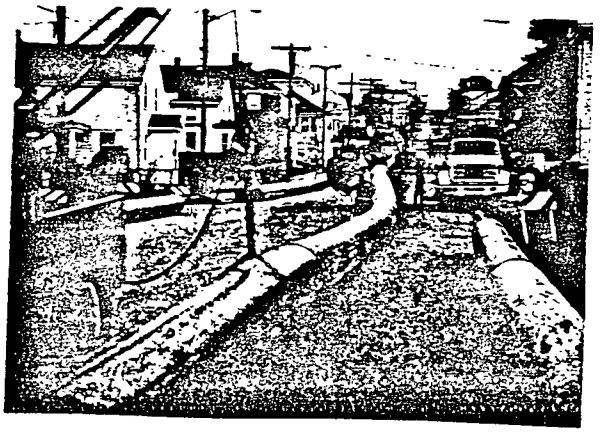

Installation Considerations

Earth Loads. Live Loads, Environmental Conditions. The systems design engineer should categorize the installation into one of several types Each installation requires selection of the proper SDR to support the external earth or traffic loads imposed on the pipe longitudinally or circumferentially. Simultaneously, earth compaction factors should be specified for burial installations to ensure that the true earth and traffic loads do not exceed the system design limits.

Some of the more important factors to consider for each installation are

Loads on Supported/Suspended Pipelines: The supports must be frequent enough to prevent any sag from the weight of the pipe and contents. Frequent supports also allow control or restraint of thermal expansion

Loads on Exposed. "Aboveground" Pipelines. Those pipelines laid overland are exposed to numerous hazards. From season to season and night to day, the pipe will naturally contract or expand as all materials do. Its movement should be controlled by such means as snaking, anchoring or shallow trenching. This will prevent abrasion due to movement as well as possible kinking As the summer temperature increases, the pressure rating of the pipe is decreased As the winter temperature decreases, the safety factor on pipe pressure is increased

Loads on Buried, "Belowground" Pipelines This complex subject is covered in depth It considers the earth load, loads imposed by settling, loads imposed by variable water tables, etc Control of thermal expansion through earth friction is discussed.

Loads on Buried, "Marine" Pipelines Buried marine pipelines require specific consideration to control pipeline buoyancy regarding the density of the pipe, the density of the fluid being transported and variance in operating conditions Pipelines not entirely full are subject to external crushing by the weight of the water Design of buried marine pipelines should include installation procedures as well as methods to anchor or secure the pipeline in place Pipeline weights and spacing must be determined The installation procedure should provide means to minimize excessive strain during the sinking of the pipe assembly Consideration should be given to possible damage by boat anchors, debris and current action as well as to the support capacity of the bottom gravel, mud or silt. The designer should also consider anchoring the pipe as it enters or leaves the water by such means as trenching and burial

Loads on Buried, "Marshland" Pipelines Marshy installations do not simply imply those areas filled with peat moss and weeds It also includes those pipelines buried in areas in which the soil becomes easily liquefied or fluidized For example, vibration due to turbulent flow or a worn pump might cause certain clays to fluidize Under such conditions the pipe could erupt through to the surface due to its buoyancy Such a pipeline must be weighted to keep it below the surface. On the other hand, a slurry line with negative buoyancy may need support to keep it from sinking to unreasonable depths The combination of soil loads, water loads buoyancy and soil support must be considered.

Loads on Exposed. "Water Surface" Pipelines Driscopipe filled with water will float, it is naturally buoyant It can even be used for flotation purposes As a float or a floating pipeline, consideration should be given to wind forces and wave action, possible anchoring, possible damage by boats or logs possible changes in fluid densities and methods of anchoring the pipe as it enters or leaves the water at the shoreline.

Live Traffic Loads: Traffic operating over a buried pipeline (or even near a pipeline) causes the earth to move under its weight This ever-so-slight movement is a dynamic load transfer from the vehicle to the ground. The heavier the vehicle, the greater the load transfer. To distribute and reduce the load on the pipe it can be buried deeper (within limits) and/or located farther from traffic. The stress on the pipe may also be reduced by increasing the soil compaction (density) or eliminated by conducting it through a casing pipe

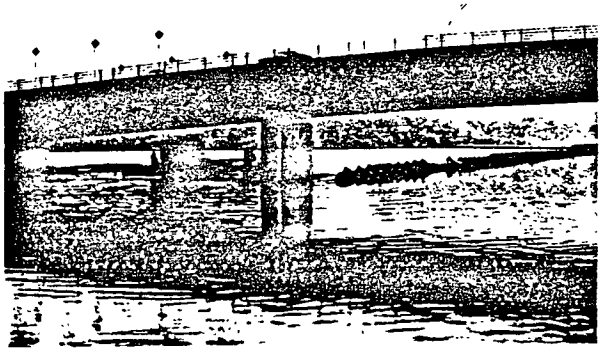

DRISCOPIPE®

Systems Design

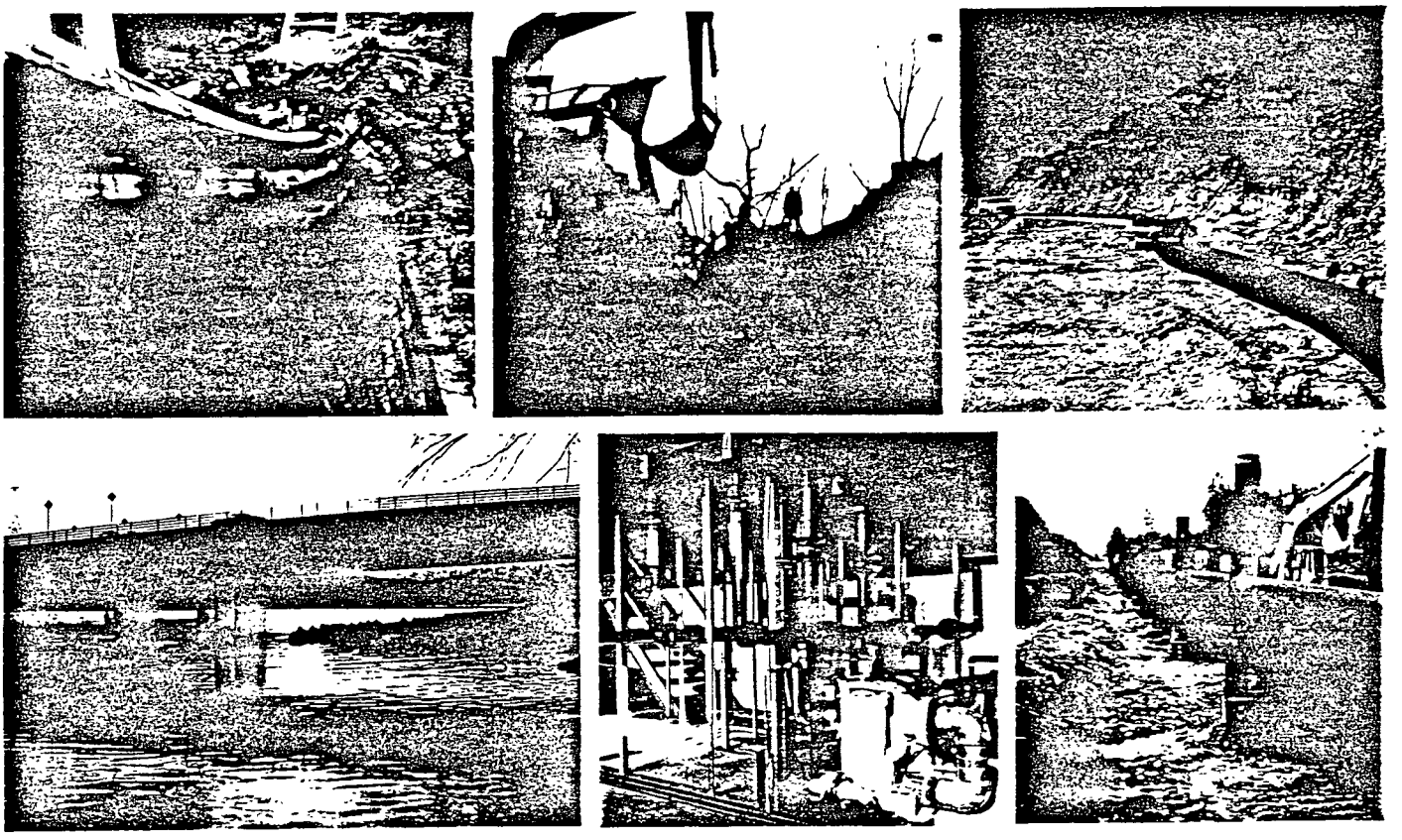

PHILLIPS 66

Chemical Resistance

Driscopipe is for all practical purposes, chemically inert. There are only a few strong chemicals which will affect it. Natural chemicals in the soil will not attack Driscopipe or cause it to degrade in any way. It is not an electrical conductor and does not rot, rust or corrode by electrolytic action. It neither supports the growth of nor is affected by algae, bacteria or fungi and is resistant to marine biological attack. Gaseous hydrocarbons have no adverse effect on expected service life. Liquid hydrocarbons will permeate the wall and reduce hydrostatic strength but do not degrade the material. Upon evaportation of the hydrocarbon, the pipe will regain its original physical properties.

Life Expectancy

The hydrostatic design basis for Driscopipe is based on extensive hydrostatic testing data evaluated by standardized industry methods. Life expectancy is estimated conservatively to be in excess of 50 years for transporting water at ambient temperature (73.4°F). Internal and external environmental conditions for each application may alter the expected life or change the recommended design basis to achieve the same life expectancy. These conclusions are supported by more than twenty years of actual experience.

Lightweight

Driscopipe weighs much less than most other pipes of the same size. The specific gravity is .955 – .957 . . . it floats in water. It is 70-90% lighter than concrete, cast iron or steel, making it easier to handle and install. Substantial savings can be realized by reduced manpower and equipment requirements.

Flow Factors

Driscopipe polyethylene has an extremely smooth inside surface. It maintains excellent flow properties throughout its service life due to its excellent chemical and abrasion resistance. Because of smooth walls and the non-wetting characteristic of polyethylene, higher flow capacity and reduced friction loss is possible with Driscopipe. In many cases this higher flow capacity may permit the use of smaller diameter pipe. A "C" factor of 155 is commonly used in fluid flow calculations (Hazen-Williams Formula).

Joining System

Driscopipe is joined by the heat fusion technique commonly called "butt fusion." This is a simple, visual procedure with straight forward uncomplicated instructions pioneered and developed by Phillips. It is recognized in the industry as a joining system of very high integrity and reliability. It is cost effective. No couplings are required. Joints are stronger than the pipe itself in both tension and hydrostatic loading Driscopipe may also be joined by mechanical means, such as flange adapters and flanges or compression couplings. It cannot be joined by solvent cements or adhesives as they do not bond to Driscopipe

Butt Fusion Equipment

The first crude "butt fusion" equipment for high density polyethylene was developed by Phillips in the late 50s following its first commercial production of this piping material. The joining method proved so successful that Phillips rapidly developed more sophisticated equipment and continued this developmental activity through the early 70s Since that time, with Phillips' guidance, other firms have developed an extensive line of fusion equipment which is readily available through Driscopipe distributors, or direct from the manufacturer. There are literally millions of Driscopipe fusion joins in service today giving trouble-free performance The incidence of failure is insignificant.

Toughness

The overall "toughness" of Driscopipe is an important characteristic of the pipe which is derived from many of the chemical and physical properties of the material as well as the extrusion method The pipe is not brittle. It flexes, bends and absorbs impact loads over a wide temperature range of – 180°F up to its softening temperature of 260°F. This inherent resiliency and flexibility allow the pipe to absorb surge pressures, vibration and stresses caused by soil movement. Driscopipe can be deformed without

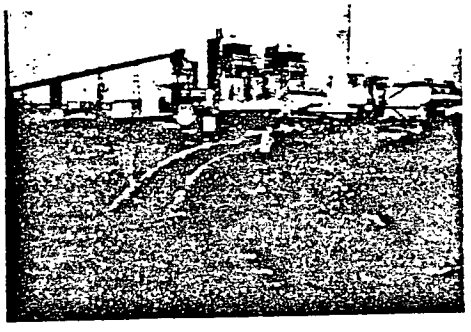

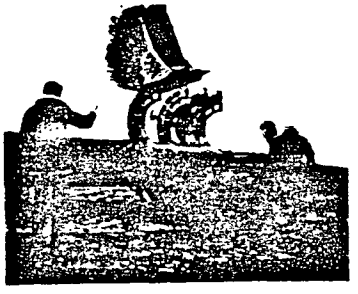

permanent damage and with no adverse effect on long term service life. It is easily cold bent in the field to a minimum radius between 20 to 40 times the pipe diameter. It is flexible for contouring to installation conditions. Its flexibility and weight allow it to be butt fused in one location and pulled into difficult locations to facilitate easy installation, or be assembled above ground and rolled into less expensive narrow trenches.

Driscopipe has very low notch sensitivity, high tear strength and excellent scratch abrasion resistance. Its resistance to environmental stress cracking is superior, ensuring no effect on long term service life from installation scratches. The extreme toughness of Driscopipe is one of its outstanding engineering characteristics leading to innovative piping design.

Abrasion Resistance

Driscopipe performs well in handling highly abrasive materials in low pressure – high velocity slurry systems. Controlled tests have shown that Driscopipe will generally out-perform steel pipe in this type of service by a ratio of 4 to 1. It also outlasts rubber-lined steel in most slurry applications due to its smooth, tough interior surface. Driscopipe has proven itself in many mining applications.

Weatherability

Driscopipe is protected against degradation which could be caused by ultra-violet rays when exposed to direct sunlight. The material contains 2½% finely divided carbon black . . . which also accounts for the black color of Driscopipe. Carbon black is the most effective single additive capable of enhancing the weathering characteristics of plastic materials. The protection which even relatively low levels of carbon black impart to plastic is so great it is not necessary to use other light stabilizers or UV absorbers.

Weatherability tests indicate that Driscopipe can be safely stored outside in most climates for periods of many years without danger of loss of physical properties due to UV exposure.

Pressure Capability

Refer to the Systems Design brochure for complete details but, in general, Phillips Driscopipe offers HDPE pipe for gravity flow and pressure service through 265 psi at 73°F for 50 years of service at a 2:1 safety factor. Product description sheets which provide size, SDR and pressure ratings are available.

Temperature Stability

The exposure of Driscopipe to normal changes in temperature does not cause degradation of the material. However, some of the physical and chemical properties of the pipe will change as temperature is increased or decreased.

Driscopipe will soften and start to melt at about 260°F. A temperature range of 475-500°F is used to fusion join the 8600 piping system. A temperature range of 375-400°F is used to fusion join the Driscopipe 1000 piping system. Refer to Driscopipe's qualified fusion procedures for details. Pipe is fabricated at about the same temperature. To protect the material against degradation at higher temperature, it has been stabilized This stabilizer protects the material against thermal degradation which might otherwise occur during manufacture, outside storage or installation

Driscopipe has been tested for thousands of hours at elevated temperatures of 140°F and 176°F without thermal degradation. These long-term pressure tests at the higher temperatures are used to obtain recommended design strengths for the pipe at these temperatures.

Temperature Response

All thermoplastic piping materials are affected by temperature changes. It is general industry practice to characterize these materials at ambient temperature, 23°C (73 4°F).

As temperature increases, long-term strength decreases and vice-versa. Long term strength test data for Driscopipe is available at 73 4°F, 100°F, 120°F and 140°F to verify its performance. Some polyethylene piping materials cannot be evaluated at higher temperatures because they fail prematurely. Knowledge of long-term strength at various temperatures allows for selective design of a system. The maximum recommended operating temperature for *pressurized* Driscopipe is 140°F. The maximum recommended operating temperature for *gravity flow* Driscopipe is 180°F when properly installed.

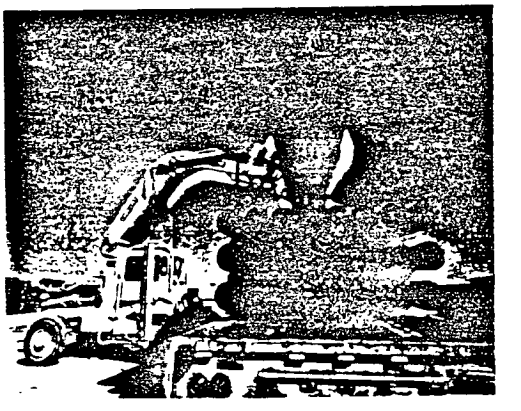

The designer must also consider other effects caused by changes in temperature, such as expansion and contraction forces and movement, changes in chemical resistance, flexibility, tensile strength, etc. Technical information relative to Driscopipe is available upon request.

Fabrication

Standard molded line fittings are available for Driscopipe in sizes through 12" IPS. Fittings fabricated from pipe are available in various pressure ranges in sizes ½" through 54". Standard fabricated fittings and special items or assemblies are available on special order. Design services are available to assist in designing system components to meet needs for special applications.

Standards

The following is a partial list of standard product specifications, methods of tests, recommended practices, industry technical reports and bulletins which are related to polyethylene piping systems. These are informative and useful to the designer and owner. Copies are available from the sponsoring organization. Information may also be obtained through a Driscopipe distributor or Phillips Driscopipe, Inc.

ASTM
American Society for Testing and Materials
1916 Race Street, Philadelphia, PA 19103

ASTM D 1248 Standard Specification for Polyethylene Plastics Molding and Extrusion Materials

ASTM D 3350 Standard Specification for Polyethylene Plastics (PE) Pipe and Fitting Materials

ASTM D 2447 Standard Specification for Polyethylene (PE) Plastic Pipe, Schedules 40 and 80 Based on Controlled Outside Diameter

ASTM D 3035 Standard Specification for Polyethylene (PE) Plastic Pipe (SDR-PR) Based on Controlled Outside Diameter

ASTM D 3261 Standard Specification for Butt Heat Fusion Polyethylene (PE) Plastic Fittings for Polyethylene (PE) Plastic Pipe and Tubing

ASTM D 1693 Test Method for Environmental Stress – Cracking of Ethylene Plastics

ASTM D 2837 Method for Obtaining Hydrostatic Design Basis for Thermoplastic Pipe Materials

ASTM D 2321 Recommended Practice for Underground Installation of Flexible Thermoplastic Sewer Pipe

ASTM D 790 Test Method for Flexural Properties of Unreinforced and Reinforced Plastics and Electrical Insulating Materials

ASTM F 412
Definitions of Terms Relating to Plastic Pipe Systems

ASTM F 585 Practice for Insertion of Flexible Polyethylene Pipe into Existing Sewers

ASTM F 894 Standard Specification for Polyethylene (PE) Large Diameter Profile Wall Sewer and Drain Pipe

ASTM F 714 Standard Specification for Polyethylene (PE) Plastic Pipe (SDR-PR) Based on Outside Diameter

ASTM F 1248 Determination of Environmental Stress Crack Resistance (ESCR) of Polyethylene Pipe

NSF
National Sanitation Foundation
NSF Building, Ann Arbor, Michigan 48105

NSF Standard 14
Thermoplastic Materials, Pipe, Fittings, Valves, Traps and Joining Materials

NSF Seal of Approval Listing of Plastic Materials, Pipe, Fittings and Appurtenances and Waste Water (NSF Testing Laboratory)

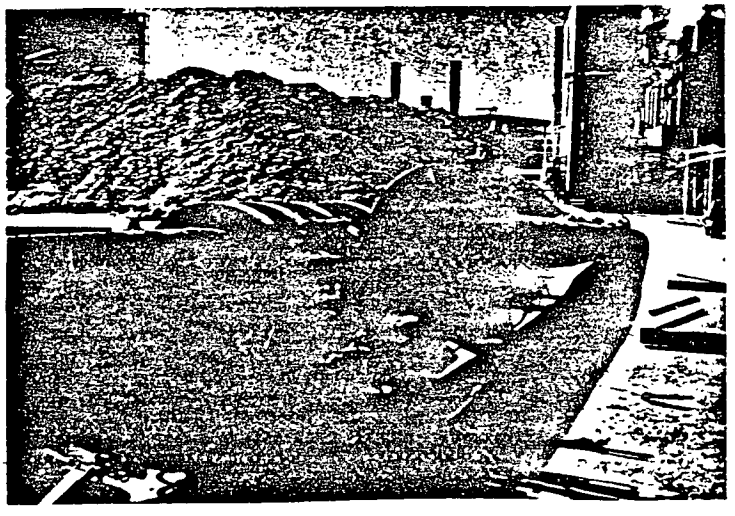

AWWA
American Water Works Assocation
666 West Quincy Avenue, Denver, Colo. 80235

AWWA C-901
Polyethylene (PE) Pressure Pipe, ½" through 3", for Water.

AWWA C-906
Polyethylene (PE) Pressure Pipe and Fittings 4" through 63" for Water Distribution.

CGSB
Canadian Government Standard Board
Ottawa, Ontario, Canada, K1A 0S5

CGSB 41-GP-25
Pipe, Polyethylene, for the Transport of Liquids

PPI
Plastic Pipe Institute
A Division of The Society of The Plastics Industry, Inc.
Wayne Interchange Plaza II
155 Route 46 West
Wayne, NJ 07470
(201) 812-9076

PPI publishes Technical Reports such as *TR5, "Standards for Plastic Piping."* This technical report is an extensive list of the most used standards and codes for procurement or identification of high quality plastic piping components. A list of Technical Reports and Technical Notes prepared and issued by PPI is also included. Copies are available from the above address PPI also publishes informative bulletins on subjects such as "Pipeline Rehabilitation with Polyolefin Pipe "

These reports are developed and published with the technical help and financial support of members of the Plastic Pipe Institute, such as Phillips Driscopipe, Inc.

FM
Factory Mutual Research
1151 Boston – Providence Turnpike
P.O. Box 9102
Norwood, Mass 02062

FM listing is currently available for Driscopipe 1000 only in sizes 2" IPS through 12" IPS in SDR 9 and SDR 11, by size per order.

CSA
Canadian Standards Association
178 Rexdale Blvd.
Rexdale, Ontario, Canada M9W 1R3

CSA B 137.0
Definitions, General Requirements and Methods of Testing for Thermoplastic Piping

CSA B 137.1
Polyethylene Pipe for Cold Water Services

CSA B 137 4
Polyethylene Piping for Gas Services

CSA B 1961
Plastic Underground Power Cable Ducting

The Driscopipe performance team offers you innovative solutions to your piping requirements. Contact your nearest Driscopipe Sales Representative. He'll give you personalized technical service, installation assistance and all the cost-saving advantages of a Driscopipe Piping System. Engineered for Performance!

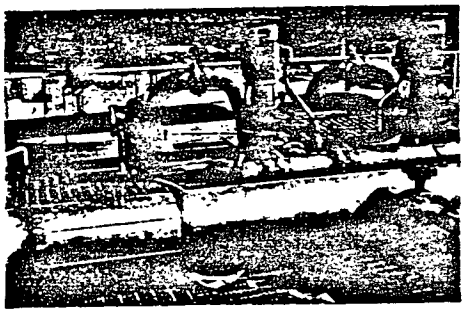

The system designer should review the various traffic weight classes, soil compaction factors and the associated stress presented in the design section.

Other Environmental Conditions:

- Sunlight and Weather – Driscopipe weathers well in every climate. It contains carbon black to protect it in aboveground installations where it is exposed to the sun and the elements. Exposure to alternating wetness and dryness or freezing and thawing does not require any special precaution, other than proper installation design.
- Biological Inertness – Polyethylene is inert. It contains no chemicals which can dissolve to contaminate water. It is not digestible, has no food value and will not support even bacterial growths. Because Driscopipe is so smooth and inert, it is difficult for marine growths and algae to adhere.
- Animal and Insect Attack – Driscopipe is not attacked by insects such as ants, termites, burrowing insects, earthworms or marine worms Smaller diameter Driscopipe can be damaged by gnawing rodents such as rats but it is not common since there is no food value
- Miscellaneous – The engineer should be aware of the total environment in which the Driscopipe system is to be used

  1. As with any other pipeline, pump cavitation and vibration should be eliminated or minimized
  2. Since Driscopipe is nonmetallic, it cannot be located by metal detectors. If a buried pipeline needs to be traced, a tracer wire should be buried adjacent to the pipe. Being nonmetallic, no sacrificial anodes are required for Driscopipe Rust or corrosion is not a problem.
  3. If Driscopipe is being used near a source of heat such as a steam-line, boiler, furnace or hot air, the pipe should be insulated from the heat or rerated strengthwise to endure the heat.
  4. If there is a significant concentration of oil or other hydrocarbon in the soil, the system designer should discuss this with the Driscopipe representative Hydrocarbons do not attack the pipe but will permeate the pipe wall causing elongation and loss of strength These effects are reversible. In permanent installations, the pipe should be upgraded to a heavier wall to provide adequate strength for the pipeline pressure.
  5. *Caution* – If Driscopipe is to be used to transport potable water, it should not be buried in soils contaminated by hydrocarbon fuels or other chemicals known to affect polyethylene nor should it be buried in areas where there is a high risk for potential severe chemical spills. In these circumstances, no piping system, whether it is plastic or metal can be considered immune to contamination by permeation through the walls or joints If the contaminating source cannot be safely controlled, it is best to change the piping route altogether

Contingency and Risk

In some cases, there is justification for the selection of a pipe size wall thickness or SDR other than that determined through an engineering analysis Upgrading to a thicker wall is often specified in slurry applications to lengthen the service life and maintain the pipe pressure rating as it wears

Upgrading may be in order as a contingency against unknowns such as variable operating conditions system abuse suspicious soil conditions etc Use of the next thicker wall and higher pressure rating will reduce hoop stress and increase the functional factor of safety If the risk of damage is high and serious economic consequences or the public safety is involved, the engineer's best judgment may be to incorporate additional safety factors in the pipeline design.

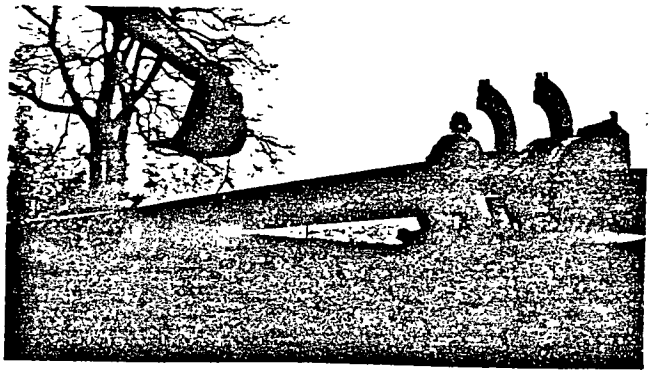

Five Step Design

The design of a Driscopipe system is simple and straightforward It is a repetitive procedure which requires attention to detail and the exercise of some judgment Every application is different and operating conditions are diverse. In one case, the pipe system may be designed around the pressure and flow capacity of a pump already on hand. In another, the system could be designed around a critical flow velocity.

Regardless of design criteria, the design process is relatively simple Essentially, it is the selection of a pipe sized to carry the flow required and the simultaneous selection of a pipe wall thickness sufficient to carry the system pressure safely (at a given temperature) for many years Fundamentally, the system pressure and temperature determine the pipe's wall thickness, the pipe's inside diameter (I.D), flow velocity and pressure drop determine the system flow rate The pipe selection process is a repetitive procedure which matches and balances pipe I.D and wall thickness in order to optimize pressure and flow capabilities at a reasonable cost.

The following guidelines are presented for evaluation when designing a specific Driscopipe system. Because of the diversity of application and the type of design constraints, it may be necessary to approach the Design Procedure Guidelines in a mixed order

GUIDELINES

- Consider service life requirements
- Consider the pipe inside diameter required to meet flow requirements
- Consider the pipe and wall thickness required to meet pressure requirements.
- Work with the pipe size and wall thickness until the flow and pressure in the pipe selected are acceptable for both.
- Consider the external "Earth Load and Live Loads".
- Adjust pipe wall thickness as required for external loads.
- Consider rerating the pipe based upon the environmental or operating temperature.
- Review the final pipe size and wall thickness to meet flow, pressure and external load requirements at a given temperature and system life expectancy.

STEP ONE: SYSTEM FLOW REQUIREMENTS

Driscopipe is an exceptionally smooth wall pipe. This accounts for its excellent flow capacity. Driscopipe has less drag, less tendency to turbulence at high flow, no corrosion, no "wetting" and is less susceptible to deposits or bacterial growth. Because of its excellent flow properties, a smaller diameter pipe can often be specified to carry a given volume when compared with steel, cast iron or concrete And, Driscopipe retains these flow characteristics over its service life.

Pressurized Full Flow

Many equations are available to show the relationship between fluid flow and pressure drop in a given pipeline. The equations typically involve a friction factor that is dependent on the pipe materials.

Darcy-Weisbach is one commonly used equation. The Darcy-Weisbach equation requires the Moody friction factor diagram or an equation to calculate the friction factor of the pipe based on its relative roughness. The 'smoothness factor' for Driscopipe is

$$\varepsilon = 7 \times 10^{-5} \text{ft or } \varepsilon = 8.4 \times 10^{-4} \text{ in}$$

The Darcy-Weisbach equation and the Colebrook-White expression for the friction factor are shown in Chart 1. The Moody diagram has not been printed here but is available in a number of reference books.

For a simpler solution to fluid flow in Driscopipe, refer to the Hazen-Williams equation and nomographs shown on pages 7, 8 and 11.

Chart 1

Darcy-Weisbach $h_f = f \frac{L}{d} \frac{V^2}{2g}$

Colebrook-White $\frac{1}{\sqrt{f}} = -2 \log\left(\frac{2.51}{Re\sqrt{f}} + \frac{\varepsilon/d}{3.7}\right)$

Where: h_f = Friction head loss
d = Inside diameter
V = Velocity
g = Gravitational acceleration
f = Friction factor
ε = Smoothness factor
Re = Reynolds number
L = Length

Initial Flow Estimates: By knowing the inside diameter of a particular pipe size and assuming a nominal velocity, the volumetric flow rate (gpm) can be calculated.

$$Q = 2.449\,V\,D^2$$

Where: Q = Gallons per minute
V = Velocity (ft./sec.)
D = I.D (inches)

By knowing the required gpm and assuming a nominal flow velocity, the pipe diameter or velocity can be calculated.

$$D = .639\sqrt{\frac{Q}{V}} \quad \text{or} \quad V = .408\left(\frac{Q}{D^2}\right)$$

From these three formulas, an approximate range is established for the pipe I.D., flow rate and flow velocity required

Selection Based on Pressurized Flow: The designer can proceed to Flow Charts 2 and 3 to select one or two pipe sizes which will adequately handle the pressurized flow rate with an acceptable pressure drop. The selection process may have to be repeated to find a pipe with the right combination of diameter, flow rate, velocity and an acceptable pressure drop Charts 2 and 3 are plots of flow rate versus pipe inside diameter versus pressure loss based upon the Hazen and Williams Formula.

THE HAZEN AND WILLIAMS FORMULA

$$\Delta P_{100} = \frac{452\,Q^{1.85}}{C^{1.85}D^{4.86}}$$

Where.
ΔP_{100} = Friction pressure loss, pounds per sq in per 100 feet of pipe
Q = Rate of flow, U S gallons per minute
C = Pipe coefficient (see Chart 4)
D = Pipe internal diameter, inches*

*Note – The pipe sizes listed on the Hazen-Williams Flow Charts 2 and 3 are nominal pipe outside diameters Refer to dimensional charts for exact dimensions. Charts 2 and 3 are available in an 11" × 17" size free upon request

The coefficient C is essentially a friction factor Chart 4 outlines "C" values for various pipes with the influence of age in water service The designer will need to exercise judgment in the selection of pipe sizes to best meet the design parameters and goals The following may be helpful:

- For a given flow rate, a LARGER diameter pipe will have a lower velocity and a lower pressure drop
- For a given flow rate, a SMALLER diameter pipe will have higher velocity and a higher pressure drop
- Higher velocity in larger diameter pipes produced less frictional head loss when compared to the same velocity in a smaller pipe.
- For *laminar* flow, the loss in pressure through a pipe is inversely proportional to the fourth power of the pipe inside diameter.
- For *turbulent* flow, the loss in pressure through a pipe is directly proportional to the square of the flow rate and inversely proportional to the fifth power of the inside diameter(ie. $\Delta P/100$ ft. = $1.35fQ^2/D^5$)

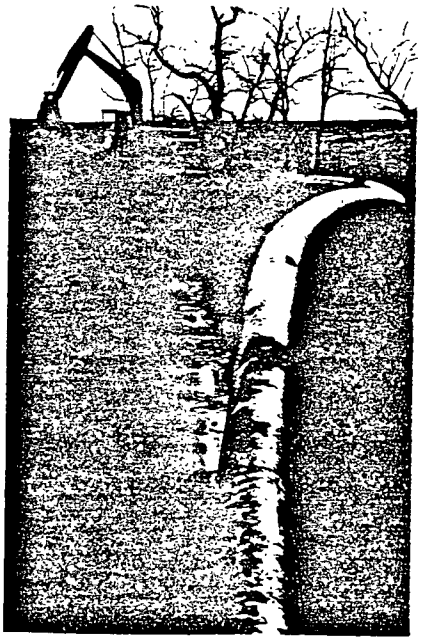

Chart 2

DRISCOPIPE 1000 & 8600 PIPE (SDR 32.5, SDR 26, SDR 21)
Pressure Loss vs. Water Flow Rate for Full Flow Condition

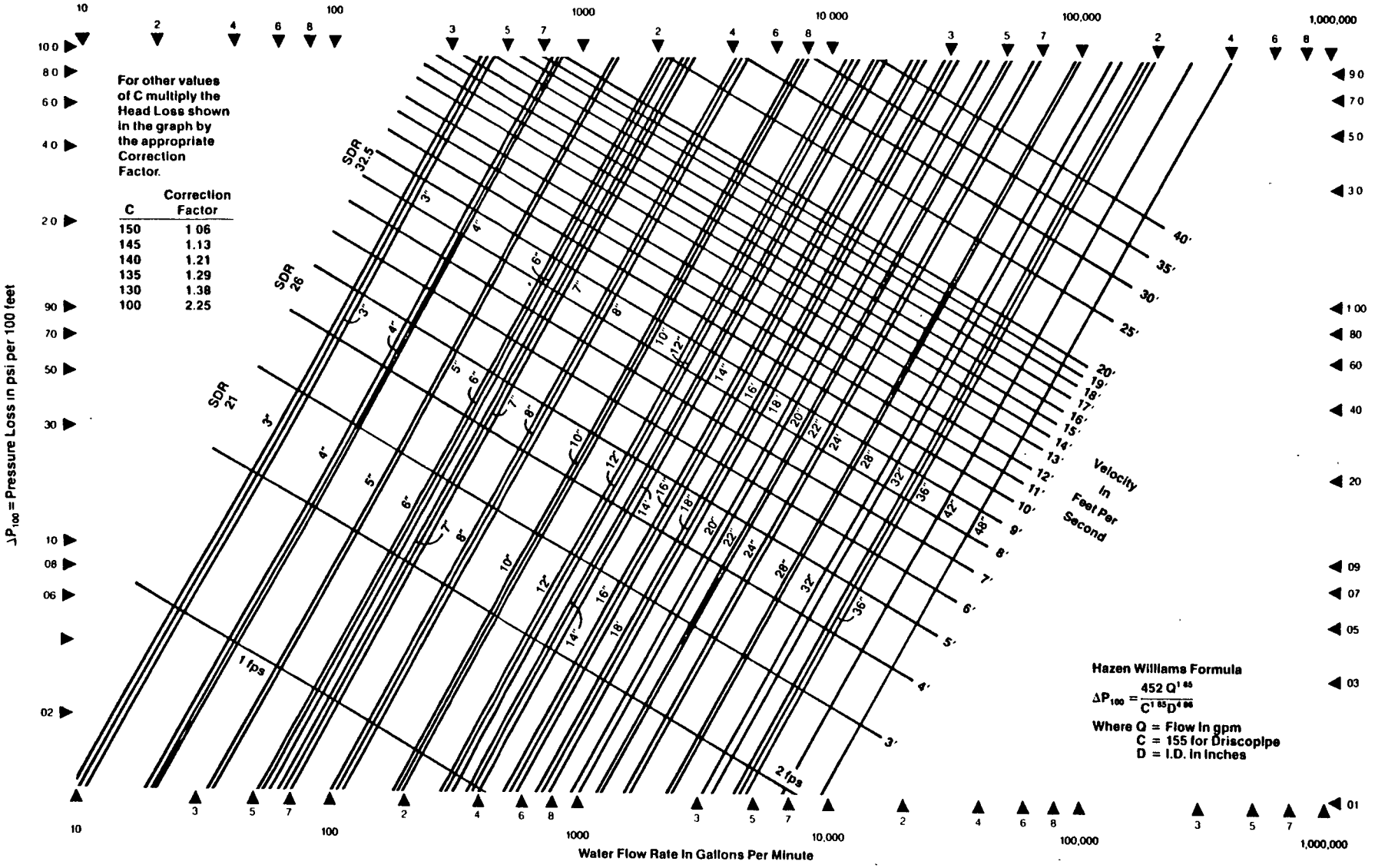

Chart 3

DRISCOPIPE 1000 & 8600 PIPE (SDR 15.5, SDR 11, SDR 9.33)
Pressure Loss vs. Water Flow Rate for Full Flow Condition

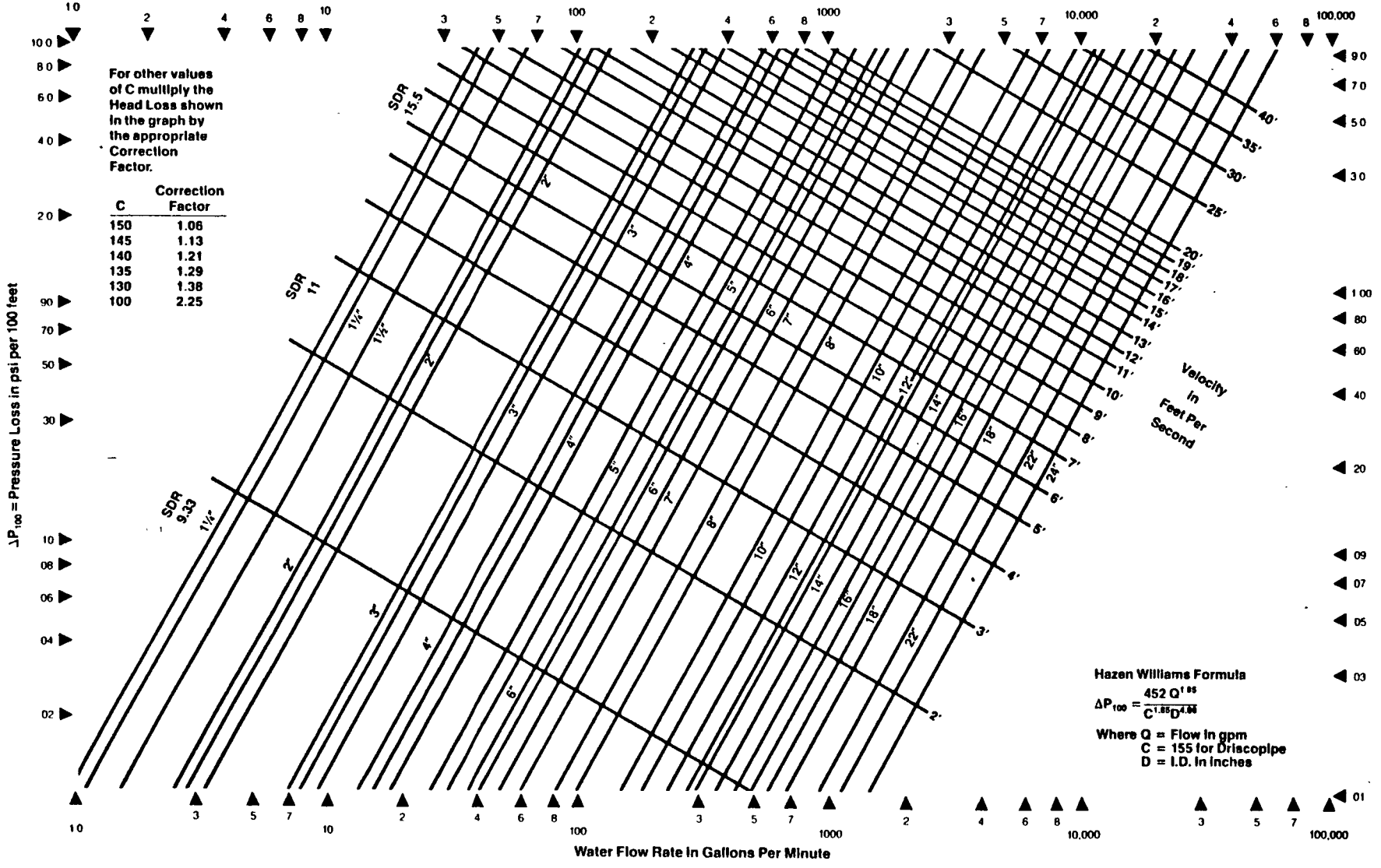

DRISCOPIPE

Chart 4

Table of "C" Values for "Hazen and Williams Formula"

Constant	Type of Pipe
155	Driscopipe
140	New steel pipe or tubing Glass tubing Asbestos cement
130	Copper tubing Ordinary brass pipe Cast iron – new Cast iron – tar coated but new Cast iron – fully cement lined
125	Steel pipe – old
120	Wood stave pipe Concrete pipe New wrought iron pipe Four to six years old cast iron pipe
110	Ten to twelve years old cast iron pipe Vitrified pipe Spiral riveted steel, flow with lap Galvanized steel
100	Spiral riveted steel, flow against lap Thirteen to twenty years old cast iron pipe Galvanized steel – over 5 years old Cast iron – tar coated over 10 years old
90	Twenty-six to thirty-year old cast iron pipe
60	Corrugated steel pipe

Fitting Pressure Drop: Listed below in Chart 5 are various common piping system components and the associated pressure loss through the fitting expressed as an equivalent length of straight pipe in terms of diameters. The inside diameter (in feet) multiplied by the equivalent length diameters gives the equivalent length (in feet) of pipe. This equivalent length of pipe is added to the total footage of the piping system when calculating the total system pressure drop.

These equivalent lengths should be considered an approximation suitable for most installations.

Chart 5

Fabricated Fitting	Equiv. Length
Running Tee	20 D
Branch Tee	50 D
90° Fab. Ell	30 D
60° Fab Ell	25 D
45° Fab Ell	18 D
45° Fab. Wye	60 D
Conventional Globe Valve (Full Open)	350 D
Conventional Angle Valve (Full Open)	180 D
Conventional Wedge Gate Valve (Full Open)	15 D
Butterfly Valve (Full Open)	40 D
Conventional Swing Check Valve	100D

(See Appendix for further data on resistance of valves and fittings to flow).

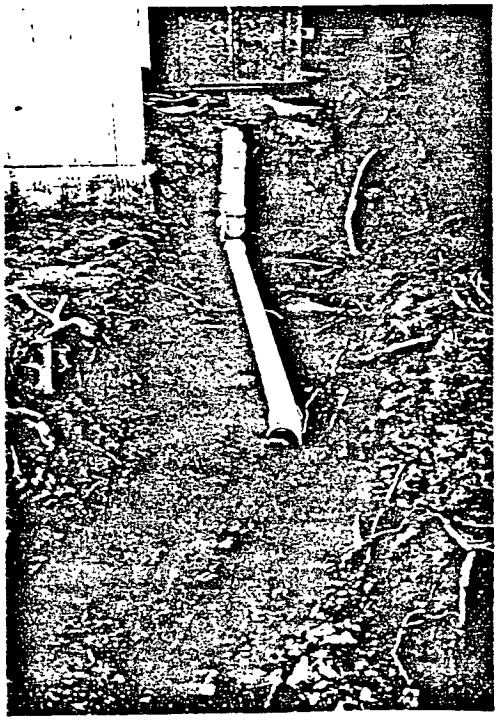

Pressure Loss for Viscous Fluids

- Water Base Fluids: For water base fluids with viscosities different than pure water, a rough estimate of the pressure loss due to this viscosity is approximated by multiplying the Hazen-Williams frictional pressure loss per 100 ft by the specific gravity of the fluid.
- Non-Water Base Fluids. When the Reynolds number of flow in pipes is less than 1200 viscous flow exists. The Reynolds number can be calculated from

$$Re = \frac{50.7\,Q\rho}{d\mu}$$

Where: Q = flow in gpm
ρ = density of fluid in lbs./ft.^{3}
d = inside diameter in inches
μ = absolute (dynamic) viscosity in centipoise *

*(Centipoise = Centistoke × Specific Gravity)

The pressure drop for *viscous flow* typical of some oils and liquids other than water can be calculated from:

$$\Delta P_{100} = \frac{.0273\,Q\mu}{d^4}$$

Where ΔP_{100} = Frictional Pressure Loss in psi per 100 ft. of pipe.

Refer to Chart 6 to calculate the pressure drop in psi per 100 ft of pipe using the nomogram for viscous fluids

Design Precautions After appropriate pipe sizes have been selected based upon flow requirements, the designer should consider the following before proceeding with the remaining *Design Steps*:

- The system pressure drop (including fittings) should not exceed the pressure rating of the pipe selected
- The pump pressure *should exceed* the system pressure drop but *should not exceed* the pressure rating of the pipe selected

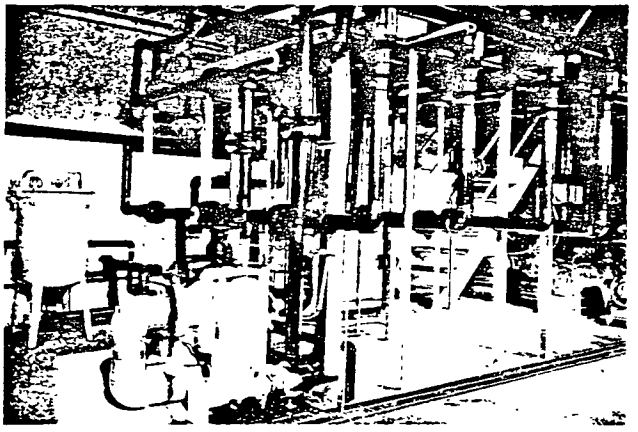

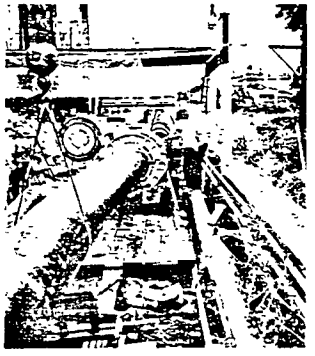

Chart 6

Viscous Flow* Pressure Loss In Pressurized, Full-Flow Pipelines

*Viscous Flow exists at Re < 1200: $Re = \frac{50.7Q\rho}{d\,\mu}$

ρ = density in #/ft³

To use chart:
connect μ and Q.
Mark point where the line $\overline{\mu Q}$ crosses the index line.
Connect this point with a line to the I.D. of pipe desired.
Extend this line to intersect ΔP_{100} line and read
Viscous Flow Pressure Loss in psi per 100 ft.

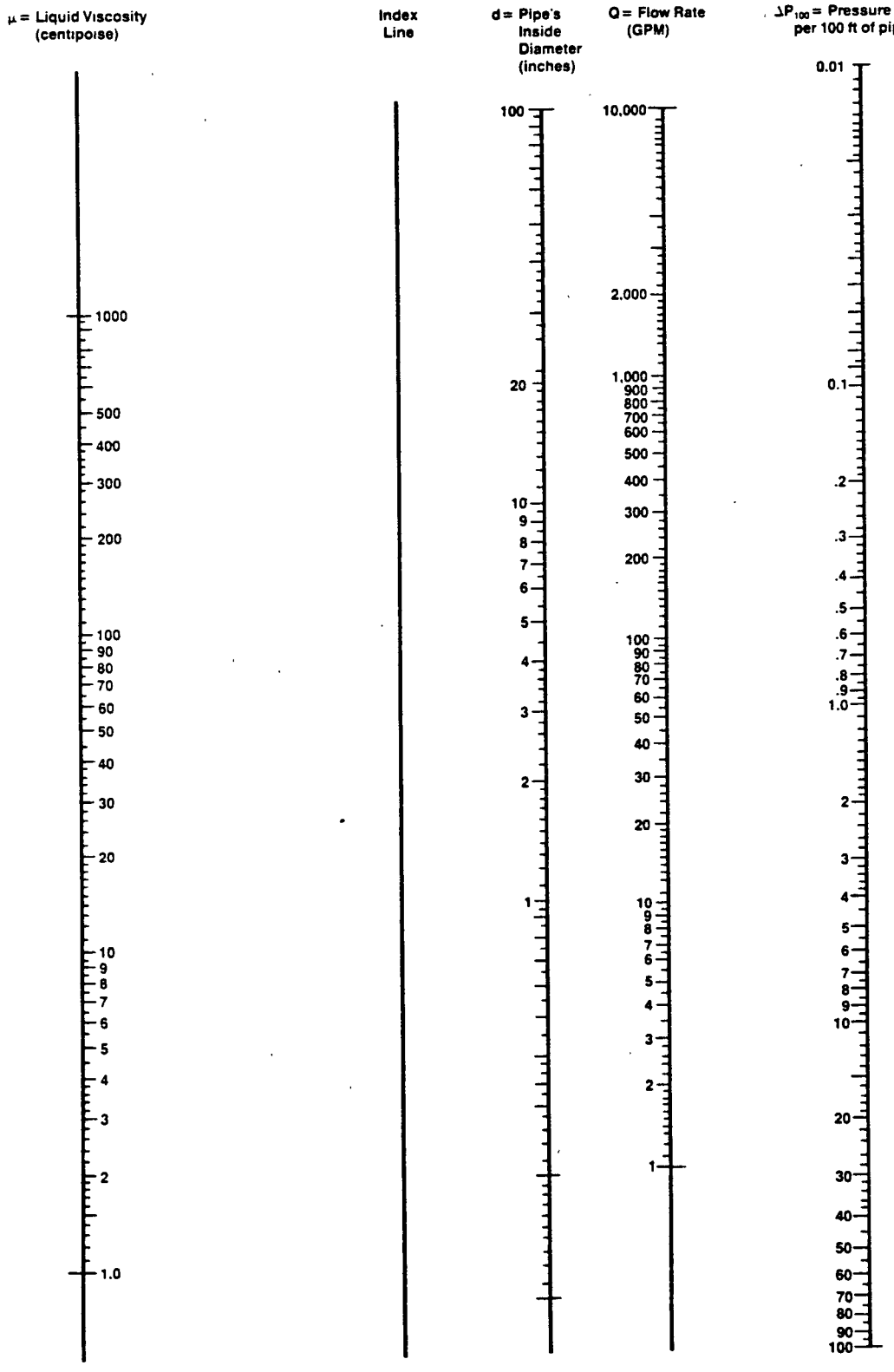

Gravity Flow

Gravity Flow systems are typified by industrial and municipal waste and sewer lines as well as water and slurry pipelines Some may operate with full flow and some may operate partially full. Because of the superior wall smoothness and excellent flow characteristics of Driscopipe, an efficient system can be designed.

Smaller diameters to carry a given flow mean reduced costs. Because Driscopipe does not "age", maintenance costs are less. Reduced operating costs supported by the reliability of Driscopipe can mean improved service.

Full Flow. Three things are required to select and size Driscopipe for a full flow gravity system. (1) GPM flow-rate requirements. (2) the slope of the pipeline and (3) a selection of an appropriate pipe I.D.

Based upon a full flow situation, the GPM flow rate can be calculated from the Manning equation as follows.

$$Q = 98.3\, A\, R_h^{2/3} S^{1/2}$$

Where:
- Q = Flow in gpm
- R_h = Hydraulic radius (ID ÷ 4) (inches)
- S = Slope (ft./foot)
- A = Cross sectional area of pipe I.D. in sq. inches
- V = Velocity (ft./sec.)
- ID = Inside diameter in inches (Note: Above formula includes $\eta = .009$)

The velocity can be calculated by:

$$V = 31.5\, R_h^{2/3} S^{1/2} = \left(\frac{.320\, Q}{A}\right)$$

The inside diameter by:

$$I.D. = \sqrt[2.67]{\frac{.03279\, Q}{S^{1/2}}}$$

And the slope by:

$$S = \frac{.001075\, Q^2}{I.D.^{5.34}}$$

All of this has been simplified and reduced into Chart 7 By use of this nomogram, the designer can specify a pipe I.D., slope, and the flow rate matched to the system requirements By considering elevation changes, etc., the proper SDR can be selected. All I.D. and O.D. dimensions for each SDR can be found on Driscopipe dimensional charts.

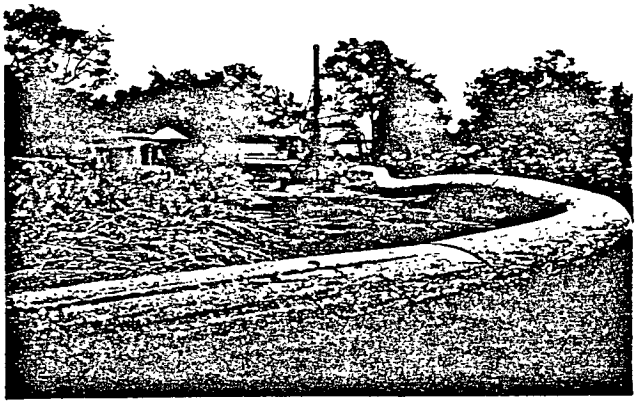

Chart 7

Inside Diameter vs. Flow Rate at a Given Slope
Gravity Full Flow: Water

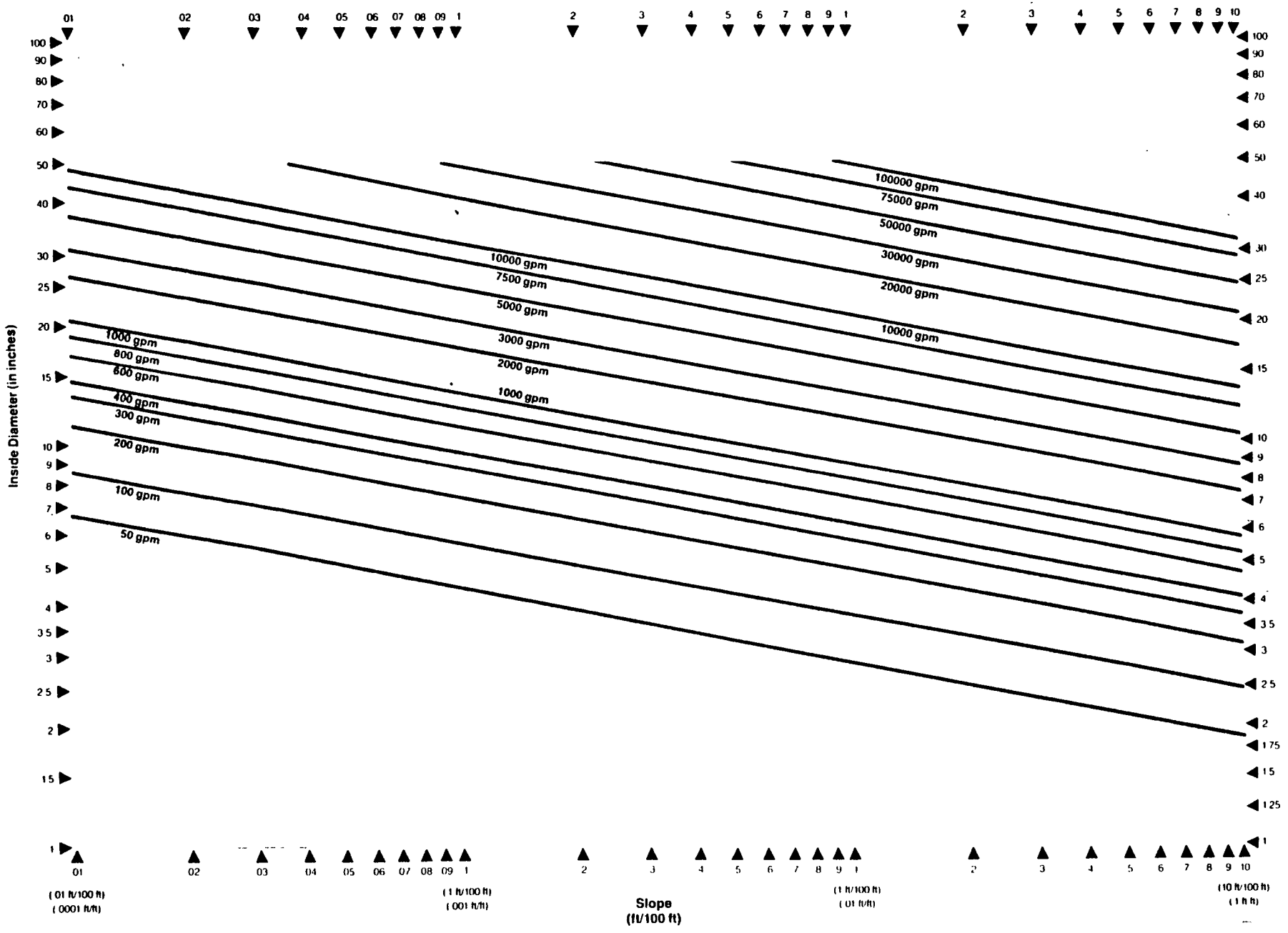

1. How to Use This Guide

This TraceTek Design Guide will assist engineers involved in the design of double containment piping for use with cable-type leak detection systems. Although the guide focuses on double containment pipe applications, it also touches on other double containment applications. In addition, it provides instructions for all engineering disciplines involved in the design of a TraceTek leak detection system.

To facilitate proper installation and improve reliability, the engineer should specify the leak detection system as part of the electrical or instrumentation portion of the specification. Alternatively, the engineer should provide a separate section for leak detection in the specification.

For clarity, this guide treats the mechanical and electrical requirements for designing the TraceTek system in two separate sections. Forming the core of these two sections are two sets of supplemental specifications:

- Mechanical specifications for piping design and installation.
- Electrical specifications for leak detection installation in the piping system.

Mechanical Specifications
The mechanical specifications cover the mechanical requirements for double containment piping to be used with cable-type leak detection systems. These mechanical specifications:

- Supplement the "Division 15: Mechanical" section of the specification for double containment piping that will be monitored by a cable-type leak detection system.
- Ensure that the piping system is cable ready.
- Must be included in the Division 15 section of the specification.

Electrical Specifications
The electrical specifications cover the electrical requirements for the cable-type leak detection system when it is used in double containment piping These electrical specifications:

- Supplement the "Division 16: Electrical" section of the specification for double containment piping that will be monitored by a cable-type leak detection system.
- Provide guidance for the electrical design and installation of the leak detection system.
- Must be included in the Division 16 section of the specification.

Partial Flow: Surprisingly enough, a gravity pipeline will carry more liquid when running 85% to 95% full than when 100% full. This is recognized as the effect of reduced friction due to the liquid's contact with less pipe wall surface. Chart 8 illustrates the changes in velocity and flow capacity when compared to full flow.

Chart 8

Carrying Capacity of Partially Full Pipes

% Full	Velocity (% of full)	Flow Capacity (% of full)
100	100	100
95	111	106.3
90	115	107.3
80	116	98
70	114	84
60	108	67
50	100	50
40	88	33
30	72	19
25	65	14
20	56	9
10	36	3

For gravity, partial flow pipelines, the GPM flow rate can be calculated through the use of the Manning equation as follows.

$$Q = 98.3\, A\, R_h^{2/3} S^{1/2}$$

Where Q = Flow in gpm
A = Pipeline cross-sectional flow area in square inches
R_h = Hydraulic radius in inches
R_h = Flow area in sq. inches divided by wetted perimeter in inches
S = Slope or gradient (ft/ft)
V = Velocity in ft/sec

$$V = .320 \frac{Q}{A}$$

Usually a partially full gravity flow pipeline is studied as a full flow pipeline of a different, but smaller, "equivalent" diameter The "equivalent" diameter matches all the hydraulic characteristics of the larger, partial flow gravity pipeline. The velocity, GPM flow rate and slope are identical in each case The equivalent diameter is four times the hydraulic radius ($D_{EQ} = 4 \times R_h$) The hydraulic radius for partial flow gravity pipelines is defined as the ratio of the cross-sectional flow area divided by the wetted perimeter. Chart 9 simplifies these calculations by applying a multiplier to the full flow condition. Refer to the chart and example problem for proper calculation procedures.

Chart 9

Gravity-flow partially full parameters

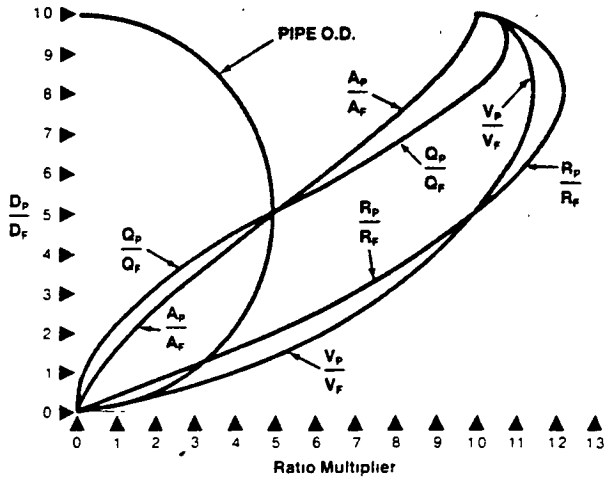

FULL FLOW
D_F = I.D
A_F = Cross Sectional Flow Area
V_F = Full Flow Velocity
Q_F = Full Flow Rate
R_F = Full Hydraulic Radius

PARTIAL FLOW
D_P = Depth of Partial Flow
A_P = Cross Sectional Flow Area
V_P = Partial Flow Velocity
Q_P = Flow Rate
R_P = Hydraulic Radius

EXAMPLE

From Gravity Full Flow chart, a 20" I.D Pipe Will Carry 9000 gpm at full flow What will it carry if flow is 15" deep?

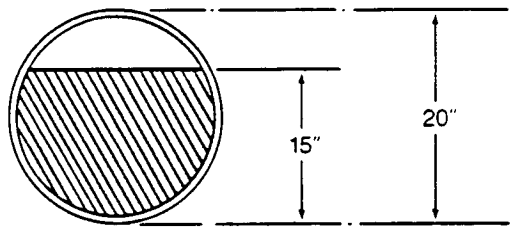

$$\frac{D_P}{D_F} = \frac{15''}{20''} = .75$$

$Q_P = Q_F \times .91 = 9000 \times .91 = 8100$ gpm

$A_P = A_F \times .82 = 314.2 \times .82 = 258$ sq. in.

$V_P = V_F \times 1.14 = 9.18 \times 1.14 = 10.5$ fps
[from $V_F = .408\,(Q_F/D_F^2)$]

$$R_P = R_F \times 1.21 = \left(\frac{20}{4}\right) \times 1.21 = 6.05''$$

Slip Lining Flow Capacity

A frequent application of Driscopipe 8600 and 1000 is for slip lining of sewers and waste handling systems. Selection of the Driscopipe size for slip lining is accomplished by determining the maximum size of liner that can be inserted into the existing line and the flow required through the new liner. Manning's formula is the accepted method for determining the flow of sewage. Using this formula, a relationship of pipe diameters can be established whereby the liner size may be predicted in order to restore the sewer to its original capacity A good rule of thumb in sizing the slip-line pipe is to allow 10% of the diameter as clearance gap between the larger pipe and the liner (ie. $O.D._{DRISCOPIPE} = 90\% \ I.D._{SEWER}$)

Since most sewage flow is gravity flow, the Manning Formulae presented earlier are applicable here

$$Q = 98.3\, A\, R_h^{2/3} S^{1/2} \qquad V = 31.5\, R_h^{2/3} S^{1/2}$$

$$I.D = \sqrt[2.67]{\frac{.03306\, Q}{S^{1/2}}} \qquad SLOPE = \frac{.001093\, Q^2}{I.D^{5.34}}$$

Where: Q = Flow in gpm
R_h = Hydraulic radius in inches
S = Slope in ft/foot
A = Cross-sectional area of pipe I.D. in square inches
V = Velocity in ft/sec
I.D = Inside diameter, in inches

By using these formulae and incorporating the Manning roughness coefficient for Driscopipe, clay tile and concrete, it can be shown that for the same slope, the I.D. of Driscopipe need be only 82 6% of the I.D of concrete and 89.8% of the I.D of clay tile to provide the same flow rate. The derivation of this fact is included in the appendix.

Driscopipe I.D = (.826) (concrete I.D)
Driscopipe I.D = (898) (clay tile I.D.)

Example A 12" concrete sewer has been corroded by the hydrogen sulfide produced by the sewage It must be relined.

Simply multiply 826 × 12" which equals 9 908" for the I.D. of the liner pipe. One Driscopipe liner that would satisfy this application is 10" SDR 26 with an I.D of 9 924" For this application this liner offers greater than 100% of original flow. The new liner will eliminate infiltration therefore 100% of original flow is not usually required. 75% will normally be satisfactory

In those cases where a reduced percentage of the original flow is anticipated the size of the Driscopipe liner can be determined by the formula

$$D_D = \left(\text{Percent}\right)^{.375} \times \left(\frac{n_{Driscopipe}}{n_{Sewer}}\right)^{.75} \times \left(D_S\right)$$

Where D_D = Driscopipe I D
D_S = Sewer I D
n = 009 Driscopipe
n = 010 PVC
n = 011 Asbestos cement
n = 012 Clay Tile
n = 015 Concrete

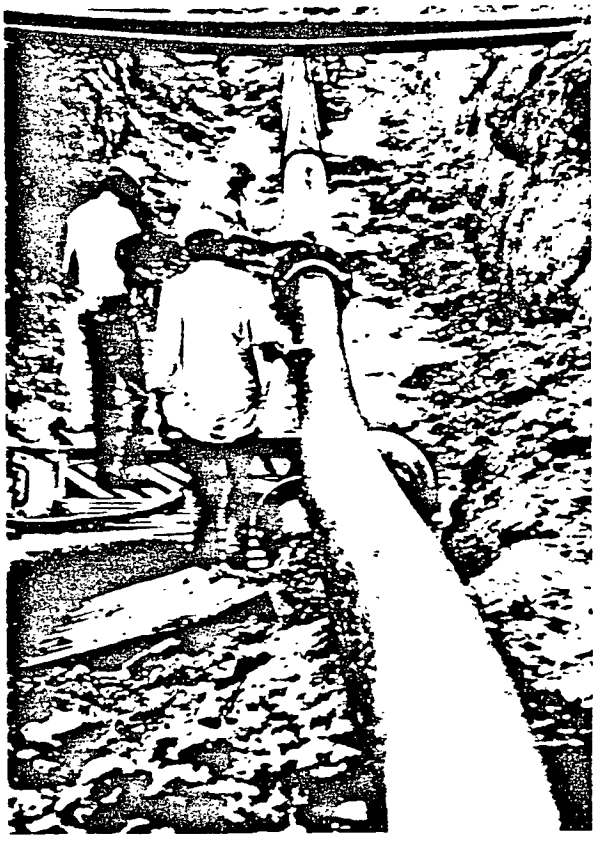

Charts 10 and 11 have been prepared to simplify determining the percent of flow offered by the new Driscopipe liner. Chart 10 is for relining concrete sewers; Chart 11 is for clay tile sewers.

Chart 10

Required HDPE I.D. for Relining

Percentage of Original Flow	Concrete Pipe Sizes (Inches)																	
	4.0	6.0	8.0	10.0	12.0	15.0	18.0	21.0	24.0	27.0	30.0	36.0	42.0	48.0	54.0	60.0	72.0	84.0
70	2 889	4 334	5 778	7 223	8 668	10 835	13 001	15 168	17 335	19 502	21 669	26 003	30 337	34 670	39 004	43 339	52 005	60.673
71	2 905	4.357	5 809	7.262	8 714	10 892	13 071	15 249	17 428	19 606	21 785	26 142	30.498	34 855	39 212	43 570	52.285	
72	2.920	4 380	5.840	7 300	8 760	10 950	13 140	15 329	17 519	19 709	21 899	26 279	30 659	35 039	39 419	43 799	52.558	
73	2 935	4.403	5 870	7.338	8 805	11 006	13 208	15 409	17 610	19 811	22 013	26 415	30 818	35 220	39 623	44.027	52 832	
74	2 950	4.425	5 900	7 375	8 850	11 063	13 275	15 488	17 700	19 913	22.125	26 550	30 975	35 401	39 826	44 252	53.099	
75	2 965	4 447	5.930	7.412	8 895	11.118	13 342	15 566	17 790	20 013	22 237	26 684	31.132	35 579	40 027	44 476	53.367	62.261
76	2.980	4 470	5 959	7 449	8 939	11.174	13 409	15 643	17 878	20 113	22 348	26 817	31.287	35.756	40.226	44.697	53 634	
77	2.994	4 492	5 989	7 486	8 983	11 229	13.475	15 720	17 966	20 212	22 458	26 949	31.441	35.932	40 424	44 917	53 896	
78	3 009	4 513	6 018	7 522	9 027	11.283	13 540	15.797	18 053	20 310	22 566	27 080	31.593	36 106	40 620	45 135	54 157	
79	3 023	4 535	6 047	7 558	9 070	11 337	13 605	15 872	18 140	20 407	22 675	27 209	31.744	36 279	40 814	45 351	54 419	
80	3.038	4.556	6 075	7.594	9.113	11 391	13.669	15 947	18 225	20.504	22 782	27 338	31.894	36 451	41 007	45.565	54 675	63.787
81	3 052	4 578	6.103	7 629	9 155	11 444	13 733	16 022	18 310	20 599	22 888	27 466	32.043	36.621	41 199	45 773	54.930	
82	3 066	4 599	6 132	7 665	9.197	11 497	13 796	16 096	18 395	20 694	22 994	27 592	32 191	36.790	41 389	45 989	55.186	
83	3.080	4 620	6 160	7 699	9 239	11 549	13 859	16 169	18 479	20.789	23 098	27.718	32 338	36 957	41.577	46.198	55 435	
84	3 094	4.640	6 187	7 734	9 281	11 601	13 921	16 242	18 562	20 882	23 202	27.843	32 483	37 124	41.764	46 406	55 685	
85	3.107	4 661	6 215	7 769	9.322	11.653	13 983	16 314	18 644	20 975	23.306	27 967	32.628	37 289	41 950	46 613	55 935	65.257
86	3 121	4 682	6 242	7 803	9 363	11 704	14 045	16 386	18 726	21.067	23 408	28 090	32.771	37 453	42 134	46.818	56 179	
87	3 135	4 702	6 269	7.837	9 404	11 755	14.106	16.457	18 808	21.159	23 510	28.212	32 914	37 616	42 318	47 021	56.422	
88	3 148	4 722	6.296	7 870	9 444	11 805	14 166	16 527	18 889	21.250	23 611	28 333	33 055	37.777	42 499	47 223	56.666	
89	3 161	4.742	6 323	7.904	9 484	11 855	14.227	16 598	18 969	21 340	23 711	28 453	33 195	37 938	42 680	47 424	56.904	
90	3.175	4.762	6 349	7 937	9 524	11 905	14 286	16 667	19 048	21 429	23 811	28 573	33 335	38 097	42 859	47.623	57.148	66 672
91	3 188	4.782	6 376	7 970	9 564	11 955	14 346	16 737	19 128	21.518	23 909	28 691	33 473	38 255	43 037	47.820	57 385	
92	3 201	4 802	6 402	8 003	9 603	12 004	14 405	16 805	19 206	21 607	24 008	28 809	33 611	38 412	43 214	48 017	57 617	
93	3 214	4 821	6 428	8 035	9 642	12 053	14 463	16 874	19 284	21 695	24.105	28 926	33 747	38 568	43 389	48 406	58 087	
94	3 227	4 840	6.454	8 067	9 681	12 101	14 521	16 941	19 362	21 782	24 202	29 042	33.883	38 723	43.564	48.406	58 087	
95	3 240	4 860	6 480	8 099	9 719	12 149	14 579	17 009	19 439	21 868	24 298	29 158	34 017	38 877	43 737	48 598	58.313	68 032
96	3 253	4.879	6 505	8 131	9 758	12 197	14 636	17 076	19.515	21 954	24 394	29 273	34.151	39.030	43 909	48.789	58 545	
97	3 265	4 898	6 530	8 163	9 796	12 244	14 693	17 142	19 591	22 040	24 489	29 387	34 284	39 182	44 080	48 979	58 771	
98	3 278	4.917	6 556	8 194	9 833	12 292	14 750	17 208	19 667	22 125	24 583	29 500	34 416	39.333	44 250	49 168	59.002	
99	3 290	4 935	6 581	8 226	9 871	12 338	14 806	17.274	19 742	22 209	24 677	29 612	34 548	39.483	44.418	49 353	59 222	
100	3 303	4 954	6 605	8 257	9 908	12 385	14 862	17.339	19 816	22 293	24 770	29.724	34 678	39 632	44 586	49.542	59 448	69.356
101	3 315	4 973	6 630	8 288	9 945	12 431	14 918	17 404	19 890	22 376	24 863	29 835	34 808	39 780	44 753	49.727	59 668	
102	3.327	4 991	6 655	8 318	9 982	12 477	14 973	17 468	19 964	22 459	24 955	29 946	34 937	39 928	44 919	49 911	59 894	
103	3 339	5 009	6 679	8 349	10 018	12 523	15 028	17 532	20 037	22 542	25 046	30 055	35 065	40 074	45 083	50 094	60 108	
104	3 352	5 027	6 703	8 379	10 055	12 569	15 082	17 596	20 110	22 623	25 137	30 165	35 192	40.219	45 247	50 276	60.328	
105	3 364	5 045	6 727	8 409	10 091	12 614	15 136	17 659	20 182	22 705	25 227	30 273	35 318	40 364	45 409	50 436	60 548	70.639
106	3 376	5 063	6 751	8 439	10 127	12 659	15 190	17 722	20 254	22 786	25 317	30 381	35 444	40 508	45 571	50.636	60 762	
107	3.388	5 081	6 775	8 469	10 163	12 703	15 244	17 785	20 325	22 866	25 407	30 488	35 569	40 651	45 732	50 815	60 976	
108	3 399	5 099	6 799	8 498	10 198	12 748	15 297	17 847	20 396	22 946	25 495	30 594	35 694	40 793	45 892	50 992	61 190	
109	3 411	5 117	6 822	8 528	10 233	12 792	15 350	17 909	20 467	23 025	25 584	30 700	35 817	40 934	46.051	51 169	61.398	
110	3 423	5 134	6 846	8 557	10 269	12 836	15.403	17 970	20 537	23 104	25 671	30 806	35 940	41 074	46 209	51 344	61 612	71 881

Chart 11

Required HDPE I.D. for Relining

Percentage of Original Flow	Clay Tile Pipe Sizes (Inches)														
	4.0	6.0	8.0	10.0	12.0	15.0	18.0	21.0	24.0	27.0	30.0	36.0	42.0	48.0	54.0
70	3 141	4 712	6 283	7.853	9 424	11 780	14 136	16 492	18 848	21.204	23 560	28 272	32.984	37 696	42 409
71	3.158	4.737	6 316	7.895	9 474	11 843	14.212	16.580	18.949	21 317	23.686	28.423	33.160	37 898	42 635
72	3.175	4.762	6 349	7.937	9.524	11 905	14 286	16 667	19 048	21.429	23 811	28.573	33.335	38.097	42.859
73	3.191	4.787	6 382	7 978	9 574	11.967	14 360	16 754	19 147	21.541	23 934	28.721	33 508	38.294	43 081
74	3 208	4 811	6 415	8 019	9 623	12 028	14 434	16 839	19 245	21.651	24 056	28 868	33.679	38.490	43 302
75	3.224	4.836	6 447	8 059	9 671	12 089	14 507	16.924	19.342	21.760	24.178	29 013	33 849	38 685	43.520
76	3.240	4 860	6.480	8 099	9 719	12 149	14 579	17 009	19 439	21.868	24 298	29 158	34.017	38 877	43.737
77	3 256	4 884	6.511	8 139	9 767	12 209	14 651	17 092	19 534	21 976	24 418	29 301	34 185	39 068	43.952
78	3 271	4 907	6 543	8 179	9 814	12 268	14 722	17.175	19 629	22 082	24 536	29 443	34 350	39.258	44.165
79	3.287	4.931	6 574	8 218	9.861	12 327	14 792	17 257	19 723	22 188	24 654	29.584	34.515	39 446	44.376
80	3.303	4 954	6.605	8 257	9.908	12.385	14 862	17.339	19 816	22 293	24 770	29.724	34.678	39 632	44.586
81	3.318	4 977	6.636	8 295	9 954	12.443	14 931	17 420	19 909	22 397	24.886	29 863	34 840	39 817	44 794
82	3 333	5 000	6 667	8 334	10.000	12.500	15.000	17.500	20 000	22 500	25 001	30 001	35 001	40.001	45 001
83	3 349	5.023	6 697	8 371	10 046	12 557	15 069	17 580	20 092	22 603	25 114	30.137	35.160	40.183	45.206
84	3 364	5 045	6 727	8.409	10 091	12.614	15.136	17.659	20 182	22 705	25 227	30 273	35 318	40 364	45.409
85	3 379	5.068	6.757	8.447	10 136	12 670	15.204	17 738	20 272	22 806	25 340	30.408	35 476	40 544	45 611
86	3 393	5.090	6 787	8 484	10 180	12 726	15 271	17.816	20 361	22 906	25 451	30.541	35 632	40 722	45 812
87	3 408	5.112	6.816	8 521	10 225	12.781	15 337	17 893	20 449	23 005	25 562	30 674	35 786	40 899	46.011
88	3 423	5.134	6 846	8 557	10 269	12.836	15 403	17 970	20 537	23.104	25 671	30 806	35.940	41 074	46 209
89	3 437	5 156	6 875	8 593	10 312	12.890	15 468	18 046	20 624	23 202	25.780	30 937	36 093	41.249	46.405
90	3.452	5.178	6.904	8 630	10.355	12 944	15 533	18 122	20 711	23 300	25 889	31 066	36.244	41.422	46.600
91	3.466	5 199	6.932	8 665	10 398	12 998	15 598	18 197	20 797	23 397	25 996	31 195	36.395	41 594	46 793
92	3 480	5 221	6 961	8.701	10 441	13 051	15 662	18 272	20 882	23.493	26 103	31 324	36.544	41.765	46 985
93	3.495	5.242	6 989	8 736	10 484	13.104	15.725	18 346	20.967	23 588	26 209	31 451	36 693	41 934	47.176
94	3 509	5 263	7 017	8.771	10 526	13 157	15 789	18 420	21 051	23 683	26 314	31.577	36 840	42.103	47.366
95	3 523	5 284	7 045	8 806	10 568	13.209	15.851	18 493	21.135	23 777	26 419	31 703	36.987	42.270	47 554
96	3 536	5 305	7 073	8.841	10 609	13 261	15.914	18 566	21 218	23 871	26 523	31.827	37.132	42.437	47.741
97	3.550	5 325	7.100	8 875	10 650	13.313	15 976	18 638	21.301	23 964	26 626	31 951	37 277	42.602	47.927
98	3 564	5 346	7 128	8 910	10.692	13.364	16 037	18 710	21.383	24 056	26 729	32 075	37.420	42.766	48.112
99	3.577	5.366	7 155	8 944	10 732	13 415	16 098	18.782	21 465	24 148	26.831	32 197	37 563	42.929	48 295
100	3 591	5.386	7.182	8 977	10 773	13.466	16 159	18 852	21 546	24 239	26 932	32 318	37.705	43 091	48.478

DRISCOPIPE

Slurry Critical Flow

The field performance of Driscopipe in slurry applications has demonstrated its superior abrasion resistance when compared to conventional materials. Driscopipe has been lab tested and field proven to outlast steel 3 to 1 and, in many cases, 4 to 1. Driscopipe is easy to lay over difficult terrain, requires less frequent maintenance and offers economic advantages for product transport.

To benefit from all these advantages, the slurry pipeline engineer should take several things into consideration. This section discusses some of the major design topics to be considered when designing a slurry pipeline. The designer is encouraged to pursue an in-depth study of each of these topics as they apply to a particular situation.

A slurry is defined as a two phase mixture of solid particles and a fluid in which the two phases do not chemically react and can be separated by mechanical means. Slurry systems are divided into two types:

1. Non-settling slurries 2. Settling slurries

The non-settling slurries assume the hydraulic flow characterstics of a viscous fluid and such pipe systems are designed according to standard procedures with allowances for the higher viscosity. However most typical slurry applications are of the "settling" type The solids tend to settle out of the carrier fluid. As the flow velocity is reduced the fluid flow goes through settling phases Settling tendencies are often countered by increases in flow velocity

Flow Phases: Changes in the flow velocity of a slurry affect the mode of flow If the flow velocity is initially high and then is gradually slowed, the slurry will pass through four flow modes:

- Homogeneous Flow This term describes a system in which the solids are uniformly distributed throughout the liquid This is the most desirable of all flow modes because the particles do not contact the wall as frequently, thus reducing abrasion.
- Heterogeneous Flow: The solids tend to flow nearer the bottom of the pipe but do not actually slide on the pipe bottom. This is the most economical flow mode and is typically used for sand sized solids
- Saltation Flow. In this mode, solid particles tend to bounce along the bottom of the pipe This flow is particularly aggressive in its abrasion of pipe But, due to the resilience of Driscopipe the particles tend to bounce and rebound In steel pipe, the particles work-harden the wall surface and chip and chisel the steel
- Sliding Bed Flow This mode of flow is generally unsatisfactory. Solids slide and roll on the pipe bottom Excessive erosion in the pipe bottom occurs quickly Blockages can occur frequently

The sliding bed and saltation modes can often be upgraded into homogeneous and heterogeneous modes by increasing flow velocity However the operational cost (i e., high power requirements) could increase significantly.

Critical Velocity: The critical velocity of a slurry is that flow-velocity below which the solid particles tend to drop out of suspension and settle to the bottom of the pipe The critical velocity is determined by the particle size and shape, size distribution, concentration, particle density and carrier fluid density

Critical "Transition" Velocity: Some particle solids form a viscous fluid with the liquid carrier. This is a homogeneous mode For these type materials (such as fine fly-ash), when the flow velocity makes a "transition" from the turbulent flow region to the laminar flow region, the viscous, homogeneous fluid makes a "transition" from a smooth mixture to a separated mixture. When turbulence stops and laminar flow develops, the homogeneous mode of flow ends and the saltation or sliding bed mode begins. Turbulent flow is essential to keeping these type solids in suspension The following rules of thumb should be helpful in designing a pipe system for this type of slurry:

- As the slurry viscosity increases, the flow velocity must be increased to prevent settling.
- As the solids concentration increases, the flow velocity must be increased to prevent settling
- As the particle size decreases, the flow velocity must be increased to prevent settling.
- Slurries with high concentrations of fine size particles can be more abrasive than slurries with larger size particles The basic reason is that the particle/wall contact is greater and more frequent with a "fine" slurry

TYPICAL APPLICATIONS

Scrubber Solids	Fine Sands
Fine Boiler Fly-Ash	Clays
Powdered Chemicals	Particles less than 200 microns
Powdered Minerals (Coal)	

Critical "Deposition" Velocity: Some particle solids will not form a viscous, homogeneous fluid but rather a heterogeneous suspension In horizontal flow, the inertia and weight of the particle are predominant. Even at full flow, the concentrations of solids along the bottom of the pipe are greater than at the top At the critical velocity, the weight of the particle exceeds the carrier fluid's suspension capability and the solid begins to form deposits on the bottom of the pipe. The critical velocity, therefore, is a deposition velocity. The deposition velocity almost always is turbulent and is related to particle size, particle density and solids concentrations For example, high concentrations of large, heavy gravel in flowing water must be maintained at a fairly high velocity to prevent settling The following "rules of thumb" should be helpful in designing a pipe system for such a slurry:

- As the particle's "fall" velocity increases, the deposition velocity must be increased to maintain a heterogeneous flow
- Generally speaking, as particle size increases the deposition velocity must increase.
- As the density of the solids increases, the deposition velocity must increase
- As the concentration of the solids in the fluid increases, the velocity must increase
- As the pipe diameter is increased, the deposition velocity must be increased to maintain turbulence and prevent settling
- The deposition critical velocity represents the lower limit of safe operations due to increased abrasion, solids bed buildup and plugging.

TYPICAL APPLICATIONS.

Gravel Transport	Crushed Limestone
Fruit Handling/ Washing	Mine Tailings
Boiler Bottom Ash	Wood Chip/Pulp
Dredging	Mineral Ores

Slurry Critical Flow

Total Suspension — **Sub-Critical Velocity**

Viscous Slurry "Transition Settling"

Full Turbulence

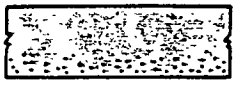

Transition to Laminar Flow Resulting in Separation

Slurry Critical Flow

Total Suspension — **Sub-Critical Velocity**

Slurry Tailings "Deposition Settling"

Full Movement

Slow Velocity Resulting in Bed Buildup

Dual Character Slurry: It is interesting to note that many commercial slurries are of a mixed character exhibiting behavior of both "deposition" and "transition" settling. The size distribution of the solids may permit the "fines" to join the fluid to form a homogeneous, viscous fluid vehicle, while the coarse solids are heterogeneously suspended in this vehicle. A coal slurry is a good example of this dual behavior. For these types of applications as well as for long-distance slurry pipelines, the design engineer should consider turbulent flow the full length of the pipeline.

These additional rules of thumb and design hints may be helpful in a specific application.

- Generally, the smaller the particle, the easier it is to transport in a slurry.
- The particle shape affects the settling rate (fall velocity) of the particle in the fluid
- The more spherical the particle, the faster it settles.
- The faster a particle settles, the higher is the velocity required to keep it in suspension.
- Heavier particles require higher transport velocities.
- Heavier transport fluids such as saltwater reduce the weight of the particle through buoyancy and will reduce settling velocities and transport velocities.
- The use of a viscous fluid vehicle (ie: fine slurry or oil) as a medium for large, heavy solids transport tends to reduce settling velocity which allows slower transport velocities to be used.
- Generally slurries are pumped at a concentration of less than 25% by volume
- Slurries are usually specified in terms of concentrations by weight Such specifications should normally follow the previous criterion, taking into account the bulk density of the solids.

Abrasive Materials Handling: Numerous field applications of Driscopipe in slurry piping systems have shown that Driscopipe is superior to most other pipe products where corrosion and erosion problems exist Driscopipe has performed well in handling material with large and heavy particle sizes in low pressure-high water velocity slurry systems In these systems, internal pipe erosion is increased by contact with the highly abrasive material and by the turbulent flow conditions.

Driscopipe was compared with X-42 grade steel pipe in a slurry handling test by Williams Brothers Engineering Company in Tulsa, Oklahoma. Both piping systems were wear tested and compared using a magnetite iron ore-water slurry. The magnetite had a specific gravity of five (five times the weight of water) and a coarse particle size. With a slurry velocity of 13.5 feet per second, the Driscopipe system outperformed the X-42 steel pipe system 4 to 1. With a velocity of 17 feet per second, the performance ratio was 3 to 1. These tests, under controlled conditions, show that Driscopipe is superior to steel in slurry handling applications Numerous commercial uses of Driscopipe in handling mine tailings, dredged material and other equally abrasive and corrosive material have demonstrated the outstanding performance of Driscopipe.

Corrosive Materials Handling. Driscopipe has performed well in systems handling highly corrosive materials, such as hot acids Some slurry systems also contain acids which underscore the preference for corrosion resistant Driscopipe for such systems

GAS FLOW

The flow capacity for a Driscopipe pipeline carrying a gaseous product may be found through the use of the Mueller relationship for pressure drop in a plastic pipe as noted below.

$$Q = \frac{2826}{G^{0.425}} \left[\frac{P_1^2 - P_2^2}{L} \right]^{.575} \times D^{2.725}$$

Where Q = Gas flow rate in standard cubic feet per hour SCFH
G = Specific gravity (Air = 1.0)
P_1 = Inlet pressure, psia
P_2 = Outlet pressure, psia
L = Pipeline length, feet
D = Inside diameter, inches

Caution:
Please note that since polyethylene is a natural insulator, any accumulated static charge due to the gas flow is not readily dissipated Special safety precautions may be required to prevent accidental discharge

Additionally, in gas pipeline applications exposed to the sun, the black color of Driscopipe products may result in a temperature rise of the gaseous product and a subsequent increase in pressure.

STEP TWO: SYSTEM LIFE EXPECTANCY

The user of a polyethylene Driscopipe system is primarily interested in one thing ... long, trouble free service. In order to maintain established confidence in the long term strength and continued performance of Driscopipe, actual pipe samples are continuously tested in accordance with ASTM procedures. Standard samples of pipe are held at constant pressure and temperature according to specifications. By using high pressures and temperatures, some samples are forced to fail Statistical predictions are then made as to the service life and long term strength of the pipe based upon the number of forced failures and the time it took them to fail.

This data is plotted in a specific manner and this graph is called the "stress-life" curve. The stress-life curve gives a definite relationship between the expected "life" of the pipe and the internal stress at a given working pressure and temperature Refer to the *Engineering Characteristics* brochure of this manual for a typical stress-life curve The "Hydrostatic Design Stress" (HDS) as shown on the stress-life curve is the estimated maximum tensile stress in the wall of the pipe in the circumferential direction due to internal hydrostatic pressure that can be continuously applied with a high degree of certainty that pipe failure will not occur The HDS is calculated by dividing the long term strength by a safety factor of 2 0 This factor of safety is an industry accepted standard designed to preserve the integrity of the pipeline as well as to protect the public In addition to achieving these goals, it extends the service life of the pipeline well beyond 100,000 hours into the 50 and 100 year range For example, Phillips Driscopipe has tested and proven Driscopipe 8600 and Driscopipe 1000 to conform to the following design criteria

DRISCOPIPE 8600 and DRISCOPIPE 1000

Long Term Hydrostatic Strength (@ 73 4°F @ 100,000 hrs.)	1600 psi
Safety Factor	2.0
Hydrostatic Design Stress	800 psi

The basic Driscopipe recommendation for all HDPE pipe systems is to use the above design criteria and expect a 50 year life from the system. Use of a higher design stress may reduce the factor of safety as well as shorten the service life of the pipe system. Any table of "Internal Pressure Ratings" for polyethylene pipe represented as safe operating working pressures should be carefully reviewed. The prudent engineer will double-check the hydrostatic design stress according to the industry accepted formula as defined in ASTM D-2837

$$P = \frac{2St}{(D-t)}$$

Where S = Hydrostatic design stress
P = Working pressure
D = Average outside diameter
t = Minimum wall thickness

STEP THREE: SYSTEM PRESSURE REQUIREMENTS

Most pipeline systems are designed for one of three types of service (a) pressurized flow, (b) non-pressurized flow, (c) vacuum flow When designing a pressurized pipe system, the pipe selected must hold the internal pressure safely and continuously In a non-pressurized system such as a gravity flow sewer, pipe selection depends on other factors

Vacuum piping systems must use pipe which will resist collapse For each installation the design engineer will use different design criteria and calculations This "Step Three" covers the selection of pipe based upon internal pressure or internal vacuum

Positive Pressure Pipelines

Steady State Internal Pressure. Phillips Driscopipe subscribes to the SDR method of rating pressure pipe SDR is the abbreviation for the "Standard Dimension Ratio" What does this SDR mean? SDR is the ratio of the pipe O D. to the minimum thickness of the wall of the pipe It can be expressed mathematically as

$$SDR = \frac{D}{t}$$

Where SDR = Standard Dimension Ratio
D = Pipe outside diameter in inches
t = Pipe minimum wall thickness in inches

For a given SDR the ratio of the O.D. to the minimum wall thickness remains constant. An SDR 11 means the O.D. of the pipe is eleven times the thickness of the wall. This remains true regardless of diameter. For example, a 14" diameter pipe with a wall of 1.273" is an SDR 11 pipe. An 18" diameter pipe with a wall of 1.637 is also an SDR 11 pipe. Common SDR ratios are SDR 9.3, SDR 11, SDR 13.5, SDR 15.5, SDR 17, SDR 19, SDR 21, SDR 26 and SDR 32.5 For high SDR ratios, the pipe wall is thin in comparison to the pipe O.D For low SDR ratios, the wall is thick in comparison to the pipe O.D. Given two pipes of the same O.D., the pipe with the thicker wall will be stronger than the one with the thinner wall. Thus, high SDRs have low pressure ratings and low SDRs correspond to high pressure ratings because of the relative wall thickness.

The pressure rating of thermoplastic pipe is mathematically calculated from the SDR and an allowable hoop-stress. The allowable hoop-stress is commonly known as the long term hydrostatic design stress. It is the stress level (that has been laboratory tested and field proven) that can exist in the pipe wall continuously with a high degree of confidence that the pipe will operate under pressure for at least 50 years with safety The formula relating SDR and hydrostatic design stress has been adopted by ISO (International Standards Organization), ASTM (American Society For Testing and Materials) and the PPI (Plastics Pipe Institute) as the standard for the industry.

The formula is:

$$P = \frac{2\,St}{D - t} \text{ or } P = \frac{2\,S}{SDR - 1}$$

Where: P = Pressure rating (psi)
D = Pipe OD (inches)
t = Minimum wall thickness (inches)
S = Hydrostatic Design Stress
SDR = D ÷ t

From the formula it can be shown that *all pipes of the same SDR (regardless of diameter) will have the same pressure rating for a given design stress* Thus, 36" dia SDR 32 5 has the same pressure rating as 14" SDR 32.5. For the design engineer's reference, the standard SDRs and their corresponding standard pressure ratings for water at 73 4°F using a hydrostatic design stress of 800 psi, are shown in Charts 12 and 13

Chart 12

Pipe Pressure Rating

Driscopipe 1000 (at 73.4°F)

	SDR 32.5	SDR 26	SDR 21	SDR 19	SDR 17	SDR 15.5	SDR 13.5	SDR 11	SDR 9	SDR 7
Long Term Strength (psi)	1600	1600	1600	1600	1600	1600	1600	1600	1600	1600
Safety Factor	2.0	2 0	2.0	2.0	2.0	2.0	2.0	2 0	2 0	2 0
Hydrostatic Design Stress	800	800	800	800	800	800	800	800	800	800
Design Life (min. years)	50	50	50	50	50	50	50	50	50	50
Pressure Rating (psi)	51	64	80	90	100	110	128	160	200	267

Chart 13

Pipe Pressure Rating

Driscopipe 8600 (at 73.4°F)

	SDR 32.5	SDR 25.3	SDR 15.5	SDR 11	SDR 9.3	SDR 8.3
Long Term Strength (psi)	1600	1600	1600	1600	1600	1600
Safety Factor	2.0	2.0	2.0	2.0	2 0	2.0
Hydrostatic Design Stress	800	800	800	800	800	800
Design Life (min. years)	50	50	50	50	50	50
Pressure Rating (psi)	51	65	110	160	190	220

Water Hammer/Pressure Surge: Any moving object has mass and velocity. Hence, any flowing liquid has momentum and inertia. When flow is suddenly stopped, the mass inertia of the flowing stream is converted into a shock wave or high static head on the pressure side of the pipeline. Some of the more common causes of hydraulic transients are (a) the opening and closing (full or partial) of valves, (b) starting and stopping of pumps, (c) changes in turbine speed, (d) changes in reservoir elevation, (e) reservoir wave action, (f) liquid column separation and (g) entrapped air.

Driscopipe can withstand an occasional surge pressure up to 2.5 times the rated pressure capability of the pipe without a cumulative effect. This is due to the long term modulus of the material being only a fraction of the short term modulus Additionally, the flexibility and resilience of Driscopipe effectively reduce the surge pressures which may be seen in steel, concrete, fiberglass or PVC.

Quick surge pressures are shock waves known as "water hammer". The pressure wave due to water hammer races back and forth in the pipe getting progressively weaker with each "hammer". The maximum surge pressure results when the time required to change a flowstream velocity a given amount is equal to or less than 2 L/S such that:

$t \leq \frac{2L}{S}$ Where: L = Length of pipeline (feet)
S = Speed of pressure wave (ft/sec)
t = Time (seconds)

S is determined from:

$$S = 12 \cdot \sqrt{\frac{KE}{[w/g] \cdot [E + K(SDR)]}}$$

Where: S = Speed of the pressure wave, ft/sec
K = Bulk modulus of the liquid, psi
= 300,000 psi for water
E = Modulus of elasticity of pipe material, psi
= 100,000 psi for Driscopipe – short term
SDR = Standard Dimension Ratio, D/t, of pipe
w = Unit weight of fluid, lbs/cu ft
g = Acceleration due to gravity
= 32.2 ft/sec/sec

The *excess* pressure due to water hammer is.

$$P_S = \frac{WSV_C}{144\,g}$$

Where: P_S = change in pressure, psi
V_C = change in velocity, ft/sec. occurring within critical time 2L/S
w, g and S are as above

The following example may be helpful in understanding these equations.

EXAMPLE
Water is flowing in a Driscopipe pipeline with an SDR of 35 at a velocity of 10 ft/sec. Determine the maximum pressure increase when a valve is *closed* in a time equal to or less than 2 L/S.

Where.
SDR = 35 K = 300,000 psi E = 100,000 psi

$$S = 12 \cdot \sqrt{\frac{(300{,}000)(100{,}000)}{[62.4/32.2][100{,}000 + (300{,}000)(35)]}} = 459 \text{ ft/sec}$$

P_S = [(62.4/32.2) (459) (10)] ÷ 144 = 61.8 psi

The changes in pressure can be minimized by using a valve closure time greater than 2L/S. Since the magnitude of the surge is basically a function of the time required to change the velocity, particular attention should be given to the final portion of valve closure. This is the time of maximum effect on the

velocity of the flowing liquid. The actual increase in pressure caused by valve closure is difficult to determine but a closure time of 10 times 2L/S for a gate valve with linear closure characteristics should reduce the pressure surge to the range of 10% to 20% of the surge caused by closure in a time equal to or less than 2L/S.

In general, good system design will eliminate quick opening/closing valves on anything but very short lines. The design engineer should use judgment with regard to the addition of surge pressures to operating pressures when selecting pipe SDRs. The following rules of thumb may be of help

- Because of the inherent flexibility and resiliency of Driscopipe, its surge pressures are significantly less than those encountered in rigid pipe under the same conditions.
- Occasional shock pressures can be accommodated within the design safety factor. Due to the short time duration of the surge pressure, occasional shock wave surge pressures to 2.5 times the SDR pressure rating at 73 4°F are usually allowable.
- If surge pressure or water hammer is expected in a system keep the flow velocity on the low side of the velocity range.
- If surge pressure or water hammer is expected, maximize the time required to shut off a valve or reduce flow A shutoff cycle 6-10 times the time period 2L ÷ S is suggested to minimize surge pressures by *gradually* slowing the fluid flowstream.
- If *constant* and repetitive surge pressures are present, the excess pressure should be added to the nominal operating pressure when selecting the pipe SDR.

Cyclic Overpressure· A short-term cyclic overpressure manifests itself in many ways Situations such as a stuck relief valve, a plugged discharge line or repetitive freeze/thaw cycles can cause an extended rise in pressure greater than the normal operating pressure

In steel, concrete, PVC or fiberglass pipe, the effect can be devastating With Driscopipe, the wall is able to stretch (strain) with the freezing water and the pipe will return to its original condition after the frozen water has thawed Although some residual strain of less than 1% may be evident, the physical properties of the pipe resin are not adversely affected and the performance of the pipe at normal operating conditions is not affected Due to the innate elastic characteristics of Driscopipe, it is capable of withstanding these types of cyclic loadings without damage to the pipe's performance. The effects of extended, repeated overpressurization can be tolerated by Driscopipe within specific limits. Driscopipe has an inherent ability to "recover" from the strain of overpressures If the recovery period at a normal level of stress is equal to or greater than the duration of the overpressurization, Driscopipe can be subjected to the stresses of overpressurization for short periods without affecting its long term strength, endurance and performance

The basic limitation on short-term overpressure cycles is to stay within the elastic limits of the pipe material If the system pressure exceeds 2.5 times the rated pressure of the pipe for any length of time, permanent strain or deformation of the pipe occurs As a result, the expected service life of the pipe can be dramatically reduced When overpressure cycling is *expected* as a *regular* condition of operation, the highest pressure anticipated for a preponderance of operating time should be considered as the operating pressure and it should be treated as though it would persist continuously for the design life of the system.

Longitudinal Stress from Internal Pressure When a fully restrained pipeline such as a buried or well anchored pipeline is pressurized, longitudinal stresses develop in the pipe wall The longitudinal stress is calculated as follows.

$$S_L = \mu P (D - t) / 2t$$

Where S_L = Longitudinal tensile stress psi
μ = Poisson's ratio
= 0 45 for Driscopipe
P = Internal operating pressure, psi
D = Pipe outside diameter, inches
t = Pipe wall thickness, inches

Thus, most pressurized pipe systems operate under a dual state of stress hoop stress and longitudinal stress. The longitudinal stress factor is already included in the pipe's pressure rating for 50 year life at normal temperature.

Non-Pressure Pipelines

Gravity flow systems are representative of non-pressure pipelines. In some instances there may be several feet of water head in the pipeline but usually the pressure can be considered to be low relative to the capability of the pipe. In these instances, flow capacity may be the predominant design parameter rather than the pipe's pressure rating.

Vacuum or Suction Pipelines

Driscopipe may be subjected to internal pressure or internal vacuum. Vacuum systems usually can be categorized into one of three general situations applicable to most installations:

- Vacuum pipelines aboveground.
- Vacuum pipelines underwater (submerged)
- Vacuum pipelines underground (buried)

The *first* type is discussed here and the last two are discussed in Step Five INSTALLATION DESIGN.

Typical applications for *aboveground vacuum* pipelines could be:

- Moisture removal (dryer) suction lines in a papermill
- Suction lines for a dredge barge.
- The down-hill run of a large-diameter gravity-flow siphon line.

When subjected to a vacuum, a sufficiently heavy wall pipe must be selected to resist the collapsing forces. Basically, the pipe's SDR governs the amount of vacuum a pipeline can support on a short-term or long-term basis Thin wall Driscopipe can sustain a full vacuum for a short time or a partial vacuum for a longer time. Alternately, selection of a thicker wall pipe will allow full vacuum for a long time. If by accident a thin-wall pipe were to be collapsed, such a collapse is not catastrophic for Driscopipe It can be totally collapsed and then returned to its original roundness without damage by applying internal pressure for a short time. However, by properly applying Chart 14, the possibility of collapse is minimized!

Phillips Driscopipe, Inc., conducted extensive testing to develop data for practical, industrial installations which would provide for long term vacuum service with a high degree of confidence and reliability. The tests examined sections of various SDR pipes in a controlled and monitored environment. The data derived incorporates the pipe SDR, ovality, acceptable minute variations in wall thickness and the time duration of various levels of stress The aboveground vacuum capabilities given in Chart 14 are the practical, maximum levels of vacuum that Driscopipe of a given SDR can support.

If these vacuum ratings are exceeded for any length of time, pipeline collapse may be accelerated Under excessive vacuum, the mode of failure is not immediate closure or collapse but rather progressive oval deflection. Failure of a vacuum pipeline is considered to occur when

$$\frac{D_{MAX}}{D_0} = 120\%$$

At this ovality, the cross-sectional flow area of the pipe is reduced to about 98% of the area of perfectly round pipe and, hence, the flow may be considered minimally impeded Ring ovality at this level has been accepted as the lower limit Further deflection beyond this limit occurs rather rapidly, proceeding to non-catastrophic full collapse and closure of the pipeline.

Chart 14

Differential – Pressure (Vacuum or External Fluid) Capability for Unsupported Pipe*@73°F

Service Life	Units	Pipe SDR 7	9.3	11	15.5	17	19	21	26	32.5
1 day	psi	189	146	87	36	28	21	16	8	4
	ft H_2O	437	337	202	83	65	48	36	18	10
	in Hg	386	298	178	73	57	42	32	16	9
1 month	psi	108	83	64	24	15	12	11	4	2
	ft H_2O	249	192	147	54	34	28	25	10	6
	in Hg	220	170	130	48	30	25	22	9	5
1 year	psi	100	78	48	22	14	9	8	4	2
	ft H_2O	232	180	111	50	32	23	19	10	5
	in Hg	205	159	98	44	28	19	17	9	4
50 years	psi	88	69	42	19	13	10	7	4	2
	ft H_2O	204	159	97	44	29	22	17	9	4
	in Hg	180	140	86	39	26	20	15	8	4

- Based on critical collapse testing of actual pipe samples.
- Full Vacuum is 14.7 psi, 34 ft water, 30 in Hg.
- Multipliers for Temperature Rerating:

50°F (10°C)	73.4°F (23°C)	100°F (38°C)	120°F (49°C)
1.14	1.00	0.79	0.62

*Note: Direct burial or grouting of the pipe supports the pipe increasing its structural differential-pressure capability about four-fold.

$$\% \text{ Ring Deflection} = \left(1 - \frac{D_{MIN}}{D_0}\right) \times 100\%$$

$$\% \text{ Ovality} = \left(\frac{D_{MAX}}{D_{MIN}} - 1\right) \times 100\%$$

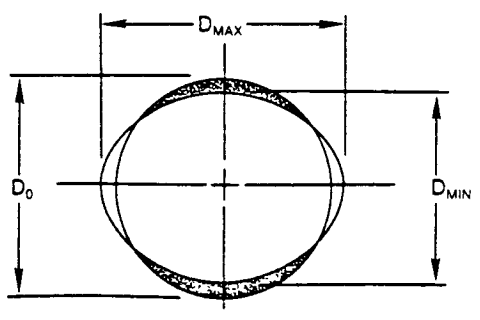

Fittings

Driscopipe fabricated fittings are high integrity fittings engineered to meet demanding industrial requirements. Driscopipe offers a complete line of standard and reducing tees, standard and special elbows, reducers, wyes and flange adapters Additionally, specialty fittings may be fabricated for specific applications

Driscopipe injection molded fittings are available up through 12-inch diameter in standard tees, reducers, 45 degree and 90 degree elbows and caps Steel to polyethylene transition fittings are available through 8-inch. Molded stub end flange adapters are available in sizes 1½-inch through 48-inch

Special fittings and fittings for 14-inch through 48-inch pipe are fabricated from segments of pipe using butt-fusion. Due to geometric considerations the pressure ratings of fabricated tees, wyes and elbows is approximately 75% of the corresponding pipe pressure rating To obtain a completely pressure rated system, fabricated tees, wyes and elbows should be chosen from a heavier wall pipe (lower SDR) Alternately, the fitting may be externally reinforced to bring it to full pressure rating The *Driscopipe Systems Installation* brochure details suggested concrete encasement for reinforcing a fabricated fitting

The designer should further consider the necessity of reinforcement, encasement or other support that may be required for each individual installation

Chart 36 in the appendix of this book lists nomenclature for some of the specialty fittings fabricated from Driscopipe

Chart 15 presents a summary of available Drisopipe fittings Please contact your Driscopipe representative for any fittings that are not listed below.

Chart 15

Type of Fitting	Fully Pressure Rated	Pressure Rerated to 75%
Tees – Molded ¾" through 12"	√	
Tees – Fabricated 8" through 48"		√
30° Elbows – Fabricated 3" through 48"		√
45° Elbows – Molded 3" through 12"	√	
45° Elbows – Fabricated 3" through 48"		√
60° Elbows – Fabricated 3" through 48"		√
90° Elbows – Molded ¾" through 12"	√	
90° Elbows – Fabricated 3" through 48"		√
45° Phillips Wye – Fabricated 3" through 48"		√
Reducer – Fabricated	√	
Flange Adapter/Stub End ¾" through 48"	√	
Steel/Polethylene Transition ¾" through 8"	√	

Refer to the Appendix of this text for Common Sense Installation Precautions for Fabricated Fittings

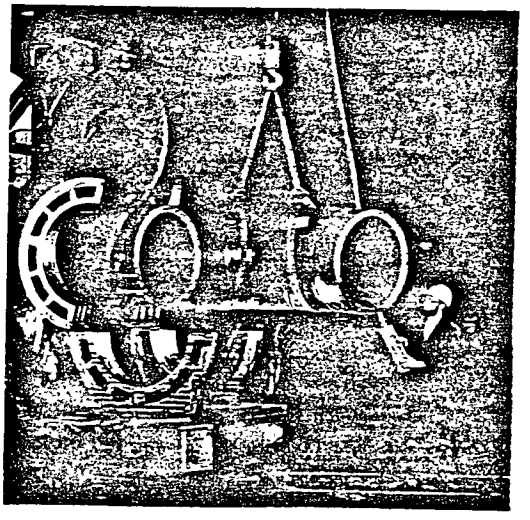

STEP FOUR: THERMAL CONSIDERATIONS

All thermoplastics respond to changes in temperatures in a predictable manner. Tests have been conducted on Driscopipe to define its response to temperature within a practical range from below freezing to +180°F. The results of such testing allow the pipeline designer to design an installation to match design criteria while minimizing compensations required for thermal expansion and contraction.

Pipe Pressure Ratings

Chart 16, page 31, shows pressure rating vs. temperature for 50 years service life of Driscopipe of various SDR values. This chart is an aid to the design engineer in selecting the proper series of Driscopipe to meet the job requirements for a given temperature.

To obtain pressure ratings at temperatures other than those shown, a linear interpolation may be made within the temperatures shown.

EXAMPLE
What is the pressure rating of SDR 11 pipe operating at 135°F?

SOLUTION
SDR 11 pipe at 130°F = 90 psi design pressure rating
SDR 11 pipe at 140°F = 80 psi design pressure rating

$$P = 90\ \text{psi} - \frac{140 - 135°F}{140 - 130°F} \times (90\ \text{psi} - 80\ \text{psi}) = 85\ \text{psi}$$

Pressure ratings for pipe SDR values other than those shown may be estimated from Chart 16 or they may be calculated using the Hoop Stress, in psi, as shown on Chart 16.

EXAMPLE
What is the pressure rating of SDR 25.3 pipe operating at 100°F?

SOLUTION

$$P = \frac{\text{Hoop Stress}}{\text{SDR} - 1} \qquad \text{for a 2·1 safety factor}$$

Hoop Stress at 100°F = 1260 psi

$$P = \frac{1260\ \text{psi}}{(25.3 - 1)} = 52\ \text{psi}$$

Thermal Conductivity

The thermal conductivity of Driscopipe is low compared to metals. It is a relatively good insulator neither gaining nor losing heat quickly. Because of the thermal inertia in Driscopipe, it takes several hours for changes in temperature to reach equilibrium The coefficient of thermal conductivity is 2.7 BTU per hour per sq. ft. per °F per inch of thickness

Thermal Stress Relaxation

As Driscopipe is subjected to an internal change in fluid temperature, a thermal gradient develops along the length of the pipeline and through the pipe wall This does not adversely affect or overstress the pipe. During the time period required to reach equilibrium, the viscoelastic polyethylene molecules react in a manner which significantly dissipates the thermally imposed stress This phenomenon is a valuable engineering property known as stress relaxation through which a major portion of the stress induced by the change in temperature is dissipated as the pipe tries to expand or contract. Consequently, the pipe never develops sufficient force or stress

within the pipe wall to yield the material In fact, where an instantaneous temperature change has been imposed on the pipe, the thermal stress has been measured and found to be about half the theoretical, calculated value. This phenomenon is universally recognized in the industry and has been incorporated in an ASTM standard specification (See ASTM D 2513 Appendix X 2.3.1.).

When the temperature change is not instantaneous but, instead, occurs over an extended period of time, it should be further understood that the rise in thermal stress is even less due to the long period of time over which stress relaxation occurs. Seasonal temperature variations seldom generate thermal stresses sufficient to overload anchors, support brackets or overcome soil friction. However, the engineer may want to consider any anchors designed into a pipeline system to be capable of withstanding the actual forces generated by an appropriate temperature change, in a fashion similar to the example presented in this section, page 34

Thermal Expansion and Contraction

Thermal expansion and contraction must be considered during design and installation stages and these design parameters should be incorporated into the installation specifications Although the coefficient of expansion is higher for polyethylene than some other common pipeline materials, the forces generated by thermal stresses are much lower because polyethylene's modulus of elasticity is lower *and* it is capable of stress relaxation

There are many methods to control expansion or contraction. One guideline is to install the pipeline when it is within 10° to 15°F of its operating temperature by installing it during a specific season, time of day or, perhaps, by circulating warm or cold air through the pipeline. Other means of controlling expansion/contraction are pertinent to certain types of installations and are briefly discussed.

Supported Pipelines: It is recommended that the pipe be installed in a warm condition in a straight line while it is in an expanded state As the pipeline cools it develops a tensile stress and the pipeline remains straight between supports As the pipe warms to its installation temperature due to seasonal change or operating conditions, it returns to its installation condition and straightness In this manner, sag between supports is minimized

Overland Pipelines: The expansion and contraction of overland surface lines are difficult to control because uneven soil friction between the pipe and the ground does not allow distributed lateral deflections to occur uniformly

In extreme cases, all deflection may occur in one area where friction is low and the pipe may kink itself This condition is most likely to occur with empty lines or where large, sudden operating temperature changes occur By installing overland pipelines in a slightly snaked pattern, thermal expansion/contraction can be controlled through control of lateral deflection As the pipeline warms, the "S" configuration becomes slightly greater As the pipe cools, the pipeline becomes straighter. Surface lines that are continuously operated full of fluid normally

experience small, slow temperature variations and are easy to control. The weight of the fluid also increases friction and reduces deflection. However, it may be necessary to anchor the line at intervals to direct and limit the deflection in any one segment of the pipeline.

Buried Pipelines. In most buried installations, a significant degree of restraint is automatically provided due to soil friction. This is further controlled because the pipe usually lies in a slight "S" curve in the trench as it is installed. Because the temperature of the soil is fairly constant, temperature changes that do occur take place over a yearly season. Because of the enormous heat sink capability of the earth, the magnitude of any temperature change is reduced and the time required to effect that temperature change is extended. For example, in a gravity flow sewer line buried in Delaware, the ground temperature reaches approximately 65°F in August and declines to 35°F in March. This 30°F temperature change occurs over seven months at a rate of nearly 0.143°F per day. In addition to soil friction overcoming a thermally imposed stress, the pipeline has an entire season to stress relax and dissipate that stress.

A buried process pipeline operating at a specific temperature may develop some initial thermal stress upon start-up. This is usually restrained by soil friction and dissipated with time by stress relaxation. As the pipeline continues operation, it tends to bring the soil envelope surrounding the pipeline into equilibrium with the operating temperature. If a minor temperature change does occur, its effect is further minimized by the massive thermal inertia within the pipe wall and in the soil surrounding the pipeline.

Marine Pipelines: In the majority of applications, the water temperature is relatively constant. If the water does change temperature, it does this slowly over several months. Thermal stress in marine applications is normally controlled by stress relaxation and vertical deflection between anchor points.

Transition Connections

The stress and the corresponding force developed by temperature change in a restrained pipeline are independent of the length and the burial conditions of the pipe. If pipe movement at the end sections cannot be tolerated, the pipe must be anchored mechanically to resist the thermal forces. Concrete collars are usually used to transfer the thermal force into the soil enveloping the pipe. Adequate frictional resistance must also be provided to transfer the force from the pipe into the concrete collar.

If the pipe is not anchored at the ends to resist movement, portions may expand or contract as the temperature changes. This change in length will extend into the burial trench to a point at which the frictional resistance of the backfill is equal to the thermal force. These movements must be considered in the design. Where Driscopipe must be connected to a tank, manhole or process equipment, a basic guideline should be followed. That guideline is to isolate the end connection, by means of an anchor or collar, from the effects of thermal movement of the rest of the pipeline. The brochure on *System Installation* illustrates several anchor systems for typical end connections. Their design can be based upon the forces developed by an instantaneous temperature change recognizing that a safety factor is built into the design due to stress relaxation with time.

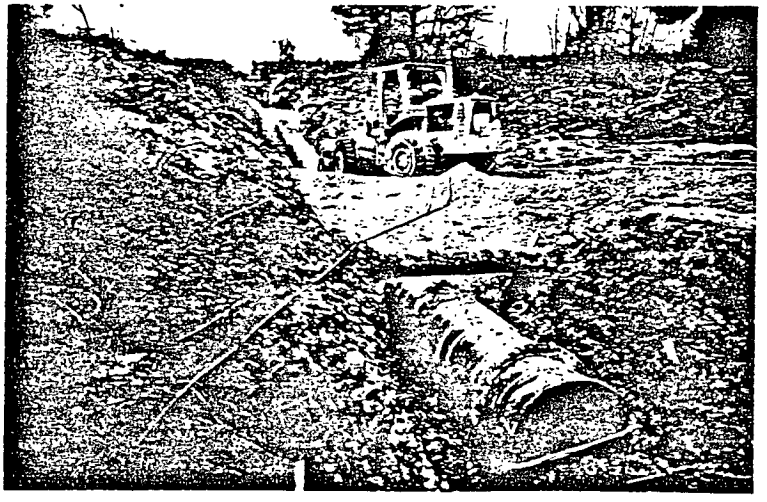

The pipeline is also subject to circumferential expansion and contraction. The designer may need to consider this in certain applications.

The following example may be helpful.

EXAMPLE

Assume a 4" diameter SDR 15.5 process pipeline is buried five feet deep in dense sandy soil with a high water table. The ground temperature is 60°F. Under intermittent operating conditions, it must carry 40°F water 1000 ft. to a remote part of the plant in a straight path. Calculate the following:

- The temperature change
- The theoretical strain
- The theoretical length change
- The instantaneous tensile stress in the pipe wall
- The tensile force
- Design a collar to isolate the terminal connection from the effects of thermal contraction.

DATA

Pipe		4" SDR 15.5
Pipe Wall Cross-sectional Area	A	3.83 Sq. in.
Linear Coefficient of Thermal Expansion	α	1.2×10^{-4} in./in./°F
Driscopipe Instantaneous Modulus of Elasticity	E	130,000 psi @ 73.4°F 180,000 psi @ 40°F
Temperature Change	ΔT	20°F
Soil/Driscopipe Coefficient of Friction	μ	0.10
Length of Straight Run	L	1000 ft.
Soil Density	γ	130 lbs. per cu. ft
Depth of Burial	h	5 ft.

CALCULATIONS

Thermal Strain:

$\varepsilon = (\alpha)(\Delta T)$

$\varepsilon = (1.2 \times 10^{-4}\ \text{in./in./°F})(20°F) = .0024$ in. per in.

Theoretical-Instantaneous Unrestrained Contraction:

$\Delta L = L \cdot \varepsilon$

$\Delta L = (1000\ \text{ft.})\ \frac{(12\ \text{in.})}{\text{ft.}}\ \frac{.0024\ \text{in.}}{\text{in.}} = 28.8$ inches

Note: Since the soil restrains the pipe, it will not change length but will instead develop tensile stress due to contraction.

Theoretical Tensile Stress: $E = \frac{\sigma}{\varepsilon}$

$\sigma = E \cdot \varepsilon = (180{,}000\ \text{psi})(.0024) = 432$ psi

Actual Tensile Stress: (per ASTM D2513-X2.3.1)

$\sigma = 432 \div 2 = 216$ psi tensile stress

Actual Tensile Force: $F = \sigma \cdot A$

$F = (216\ \text{psi})(3.83\ \text{sq. in.})$

$F = 827.3$ lbs (tensile)

Soil Frictional Resistance $f = \mu N$

Where:

Soil pressure $= \gamma h$

$= \frac{(130\ \text{lbs})(5\ \text{ft.})}{\text{cu. ft.}} = 650\ \text{psf} = 4.5$ psi

Normal Force = N = Normal force due to soil pressure on circumference of pipe ring one inch wide.

$N = (\pi D) \times (1''\ \text{ring}) \times (\text{soil pressure})$

$N = (\pi 4.5'') \times (1'') \times (4.5\ \text{psi})$

$N = (14.14\ \text{sq. in.})(4.5\ \text{psi})$

$N = 63.63$ lbs. per in. of pipe

Frictional Resistance $f = \mu N = (0.10)(63.63\ \text{lbs./in.})$

$f = 6.363$ lb. per inch of pipe due to soil friction

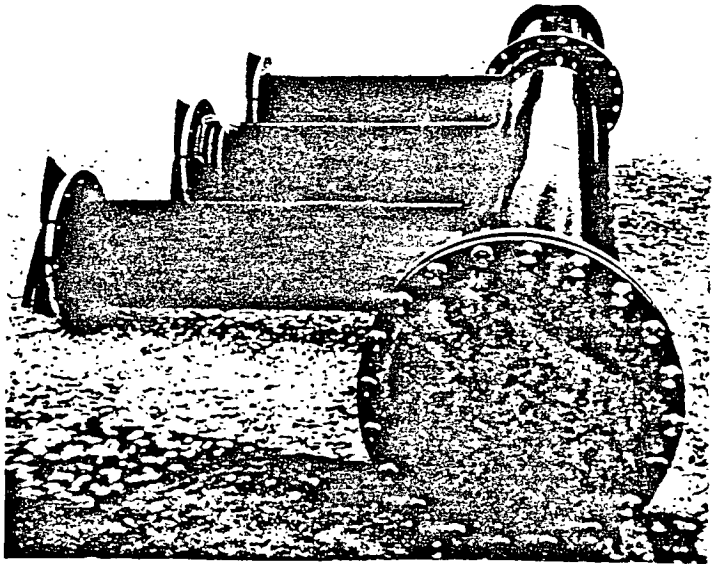

Note: Beyond 122.8 inches (10.2 ft.) the soil friction will overcome the tensile force developed by thermal contraction of the pipeline. This is calculated by dividing the tensile force in the pipe by the frictional resistance of the soil (ie: 827.3 lbs. ÷ 6.363 lbs./in. = 130 Inches)

Theoretical Movement of *Unrestrained* Ends:

$\Delta L = L \cdot \varepsilon$

ΔL = (130 ins.)(.0024 in./in.) = .312 in.

Design of Collar·

By sidewall fusing branch saddles capable of taking the shear force onto the pipe near the terminal connection, and then pouring a square concrete collar around the pipe and branch saddles into undisturbed soil, the tensile force of 827.3 lbs. is removed from the pipe connection and is evenly distributed into the soil. Assume a collar 12 inches square and 6 inches wide is used.

Area of Collar = (12″ × 12″) – (Cross Sectional Area of Pipe)

A = (144 – 16) sq.in.

A = 128 sq. in. surface area

Compressive Stress on soil due to load transfer by collar face:

S = F ÷ A

S = 827.3 lbs. ÷ 128 sq. in. = 6.5 psi

EXAMPLE DESIGN SUMMARY

Under a 20°F instantaneous temperature change, a 4″ SDR 15.5 pipeline 1000 ft. long buried five feet deep will try to change length .312″ at each end. The pipe is restrained by soil friction from further contraction. A concrete collar with a square face of 12″ × 12″ will absorb the tensile force of 827.3 lbs due to thermal contraction, and distribute it into the soil at a compressive soil stress of 6 5 psi.

Circumferential coefficient of expansion is 0.6×10^{-4} in/in/°F.

Chart 16

Driscopipe Pressure Rating (psi) vs. Temperature (°F)

Temp. °F	Hydrostatic Design Basis (psi)	Pipe SDR 32.5	26	21	19	17	15.5	13.5	11	9.3	7.0
50	1820	58	73	90	100	113	125	145	180	215	303
60	1730	55	69	86	96	108	119	138	170	207	288
73.4	**1600**	**51**	**64**	**80**	**90**	**100**	**110**	**128**	**160**	**190**	**267**
80	1520	48	60	76	85	95	105	122	150	182	253
90	1390	44	56	70	77	87	96	111	140	167	232
100	1260	40	50	63	70	79	87	101	125	150	210
110	1130	36	45	57	63	71	78	90	113	135	188
120	1000	32	40	50	56	63	69	80	100	120	167
130	900	28	36	45	50	56	62	72	90	108	150
140	800	25	32	40	45	50	55	64	80	96	133

Chart 17

Instantaneous Modulus of Elasticity vs. Temperature

140°F	50,000 psi
100°F	100,000 psi
73.4°F	130,000 psi
50°F	165,000 psi
32°F	200,000 psi
0°F	260,000 psi
–20°F	300,000 psi

STEP FIVE: INSTALLATION DESIGN

Driscopipe has been installed in many applications above and below ground crossing land, lakes, deserts, bogs and arctic tundra. Each installation requires thorough consideration of the effect of the environment on the pipe. Previous Design Steps analyzed pipeline stresses developed by internal flow and pressure. This design section discusses the stresses imposed on a pipeline by external forces.

Most typical pipe installations can be categorized as one of seven types The following pages discuss design details for each type of installation.

TYPE 1. Supported Pipelines
TYPE 2. Overland Pipelines
TYPE 3: Buried Pipelines
TYPE 4: Marine Pipelines
TYPE 5: Water Surface Pipelines
TYPE 6 Marsh Pipelines
TYPE 7: Slipline Pipelines

Driscopipe recommends reading the *Systems Installation* brochure for additional information regarding installation practices for each type of pipeline.

Type 1: Supported Pipelines

Introduction. The forces which affect the installation of a horizontally supported pipeline are those developed by the weight of the pipe and its contents between supports An examination of this type of installation shows that if the sag or deflection between supports is minimized then the degree of stress and strain within the pipe wall is controlled within safe limits. The design basis for supported or suspended horizontal pipelines is based upon support-spacing which minimizes the mid-span deflection to ¼" using a simple, continuous beam analysis. A side benefit of using maximum deflection as a design criteria is that the relevant support spacing allows the user to control thermal expansion and contraction It is important that the suspended pipeline be installed at or near its operation temperature (or in the hottest weather) such that the pipeline is thermally expanded. At that point, the clamps and supports can be bolted into position restraining the pipe from further movement. The tendency of Driscopipe to stress-relieve itself will counteract any stresses developed within the pipe as seasonal temperatures become cooler. As a seasonally cool pipe begins to warm, it merely expands to near its original length at installation In this way, thermal expansion is controlled, sag is minimized and adequate support is provided.

Pipe Support Spacing. Charts 19 through 23 give the design support spacing for various SDRs and pipe diameters. The distance between supports is based upon a continuous beam analysis and a mid-span deflection of ¼" when the pipe is totally full of water

Chart 19

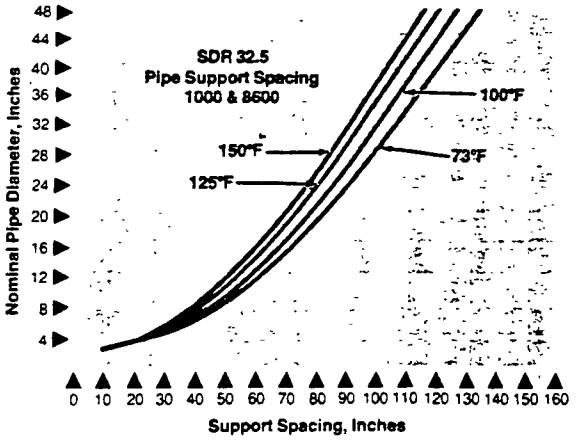

Chart 20

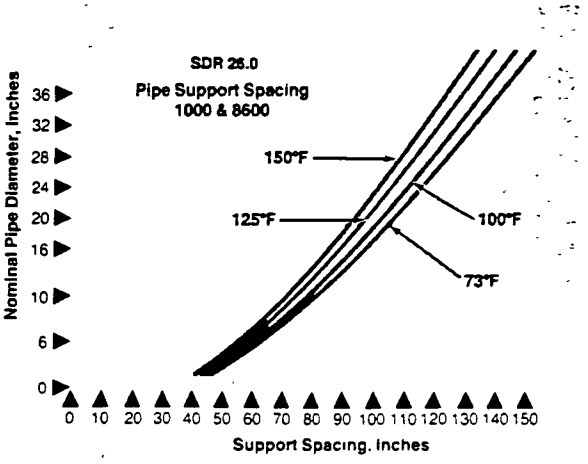

Chart 21

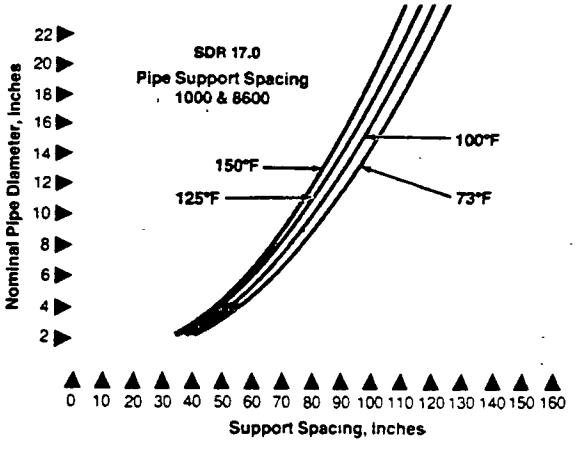

Support brackets, hangers and clamps should be the greater of 4" or one-half diameter in width. The pipeline should be installed at or near its expected operating temperature (or hottest weather). If the operating or environmental temperature is more than 10°F higher than the installation temperature, continuous support is recommended to control thermal expansion and prevent excessive droop. For operating temperatures over 100°F where significant short-term temperature changes occur, use the next lower SDR pipe at the SDR 32 5 spacing in lieu of recommended continuous support For temperature over 150°F, continuous support is required For slurry applications, multiply spacing by 90. Proper anchoring of pipeline at entry and discharge ends is required. Vertical piping should be supported at its base and spring hangers or collars used at 12 ft vertical intervals Avoid expansion loops and design the entire pipeline to take care of its own expansion by following proper support spacing and mounting practices.

Chart 22

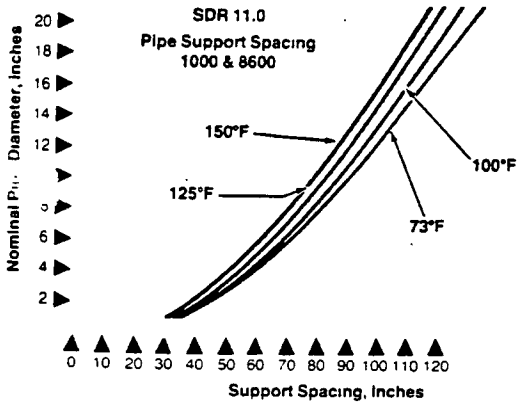

Chart 23

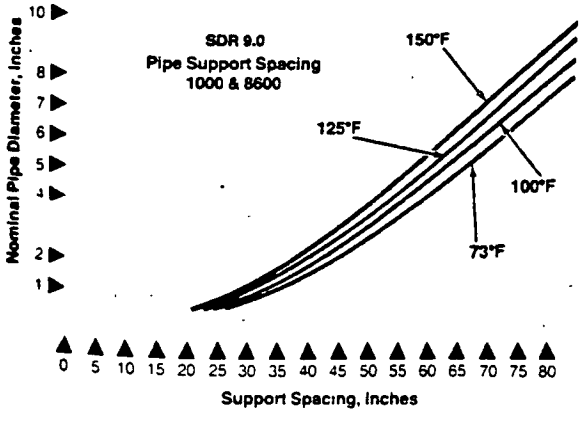

Type 2: Overland Pipelines

Introduction: Durable Driscopipe is ordinarily joined by butt-fusion techniques to form an integral, continuous pipeline. In many cases, these pipelines are simply laid over the ground. Such installations are environmentally reliable and the following guidelines may be helpful in making a good installation better. There are two principle criteria to be considered in any overland pipeline:

- Black Driscopipe should be used to withstand the sun and the elements.
- Allowances must be made for thermal expansion and contraction.

Black Driscopipe has been used successfully in overland applications because it has the natural ability to withstand the sun's heat and ultraviolet radiation Results of long term weather research indicate that black overland pipelines should last 20 to 60 years, depending on location, without loss of physical properties Colors other than black tend to deteriorate under constant exposure to the sun

From day to night and as the seasons change, the environmental temperature changes. The pipeline will expand and contract. It will want to "snake" or roll slightly. Allowances should be made for thermal expansion. One recommendation is that Driscopipe be anchored at predetermined intervals to minimize movement The following formulae calculate the anchor spacing and the associated lateral deflection.

Another method of controlling movement due to thermal expansion/contraction is to allow the pipeline to move freely between two rows of pylons set in the earth, one row on each side of the pipeline. Some pipelines have been installed overland in shallow trenches such that gravity brings the pipe back to the bottom of the trench as it changes length However, where a significant slope is encountered, anchors or a combination of anchors and pylons, berms or trenches is preferred. This is used to minimize the possibility of the pipeline moving down the slope.

Hot Climates. Where possible, the temperature range to which the pipeline is exposed should be limited by locating the line to take advantage of maximum shading from the sun's direct rays. Thermal expansion can also be minimized if fluid flow can be maintained at all times or, at least, during the hottest portion of the thermal cycle.

Cold Climates: In overland applications where freezing occurs, precautions to prevent plugging of the pipeline should be incorporated into the line's operation. Constant flow will reduce the chances of freezing.

If flow is likely to be stopped, the designer may want to provide a means to drain the pipeline partially or completely. If, for some unforeseen reason, the Driscopipe pipeline should plug and freeze, the pipeline will not be damaged. The frozen fluid may swell the diameter of the pipe but it will return to nominal size as the fluid thaws. Due to the nature of polyethylene pipe, a flame (such as a propane or acetylene torch) cannot be used to thaw a frozen section of pipe. Other methods must be used

The toughness and excellent abrasion resistance of Driscopipe will take the abuse of movement across sand and soil without detrimental effects on its strength or service life. However, in rocky areas, sharp rocks which could cut the pipe should be removed and may be replaced with a bed of sand or soil.

Lateral Deflection Due to Thermal Movement in Overland Pipelines.

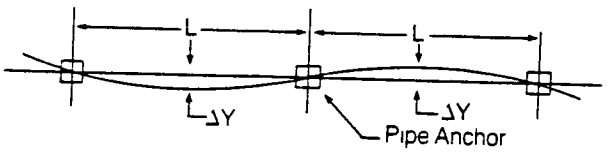

The following formulae will allow the designer to calculate lateral deflection of the pipeline and anchor point spacing

$$\Delta Y = L\sqrt{.50\alpha\Delta T} \qquad (1)$$

$$L = \frac{\Delta Y}{\sqrt{50\alpha\Delta T}} \qquad (2)$$

$$L = \frac{D\sqrt{96\alpha\Delta T}}{\varepsilon} \qquad (3)$$

Where ΔY = Lateral deflection (inches)
L = Length of pipe between anchors (inches)
α = Coefficient of thermal expansion (in/in/°F)
ΔT = Change in temperature (°F)
ε = Strain (inches/inch)
D = Pipe outside dia. (inches)

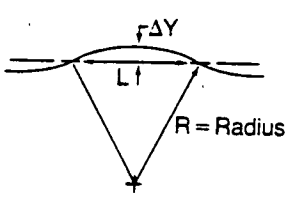

$$R = \frac{4\Delta Y^2 + L^2}{8\Delta Y}$$

Examination of equation (1) or (2) shows that for any given set of thermal conditions an increase in ΔY will increase L and vice versa. Increasing ΔY and L to the maximum will reduce the number of anchor points needed but may increase wear on the pipe from movement and may increase the possibility of kinking the line if lateral movement does not occur uniformly. One practical approach to design is to calculate L using formula (3) for strain (ε) in the pipe wall equal to 1% and (ε) equal to 5%. The L value at 5% strain will give the shortest distance between anchor points and should be considered maximum for strain (ε) and minimum spacing for L. The spacing for L should be as large as possible considering other installation location factors, such as available right-of-way slope of the ground, etc Higher values for L mean less strain (ε) and fewer anchor points and, consequently, lower costs, generally.

Type 3: Buried Pipelines

Introduction When pipelines are buried, they are subjected to external loads The effect of external pressure on flexible Driscopipe is more complex than the effect of internal pressure only For design purposes a distinction is usually made between rigid and flexible pipes A rigid pipeline (such as concrete) is considered to be the total structure and must be designed to sustain all external loads as well as internal pressure But, Driscopipe is a flexible pipe and is considered to be only one component of the "pipe-soil" system, as described more fully on page 35

Thus, in a buried situation, the SDR of the pipe and the strength of the soil envelope must be specified in order to keep the three burial design parameters (wall crushing, wall buckling and ring deflection) within acceptable limits The pipe and soil envelope become one system The mutual interaction and strength contribution of the pipe to the soil and the soil to the pipe result in a highly successful integral structure. Correct design centers around two points a) matching the proper wall thickness to the external soil pressure and b) the analysis of how Driscopipe and the soil surrounding the pipe accept the backfill earthloading and transfer it to the undisturbed walls of the ditch or trench such that the pipeline will deflect slightly into static equilibrium with the soil

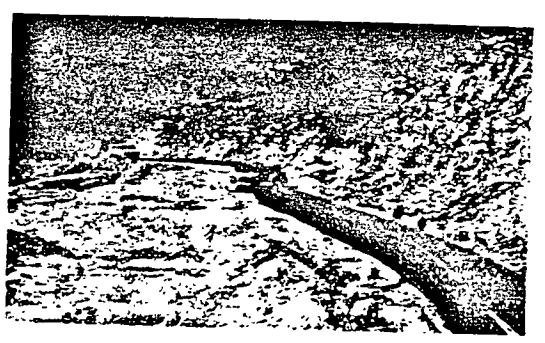

Design Considerations: Driscopipe performs effectively when buried because of its ability to deflect in the interacting pipe-soil system. The pipe actually gains strength from the surrounding soil and can support additional soil loads. The soil envelope surrounding the pipe will compress or deflect slightly under the additional loads of the dry weight of backfill above the pipe, the weight of the water table saturating the soil, the weight of nearby buildings or static structures, the weight of off-the-road trucks and tractors, railroad freight trains or any combination of all these loads. In a flexible "pipe-soil" system, the pipe deflection is the same as the soil deflection under the load of the secondary backfill and any surface loads.

When the pipeline is laid in the trench, the soil envelope is shoveled, washed, flushed or dumped into place, in layers, to an elevation above the top of the pipe. It is usually compacted to a specified Proctor density by mechanical or hydraulic means. As additional layers of soil are backfilled into the trench, the weight of the soil over the primary, compacted backfill is increased. This increased weight slightly compresses (strains downwards) the soil envelope. The amount of soil compression is related to the strength of the soil at a given density and to the intensity of the vertical soil pressure. Since the soil is not an elastic material, this compression or strain of the soil envelope by the final backfill is permanent. As the soil envelope is compressed (strained), it becomes further compacted. In its denser state, the soil develops increased resistance to the vertical soil pressure until it reaches static equilibrium without further compression or strain. This is the reaction of the compacted soil envelope.

Typical Performance Limits of Buried Pipes Due to External Soil Pressure

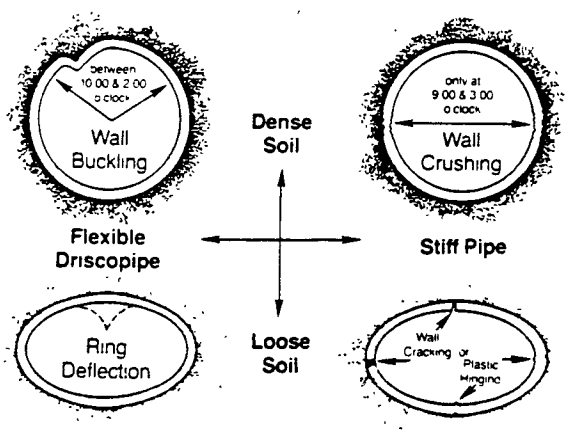

Through mathematical computations presented later, the ring deflection of Driscopipe can be calculated based upon the known properties of the pipe and the measured compressibility of the soil envelopes. As the pipe deflects with the soil, it forms a very slight ellipse by decreasing in the vertical diameter an amount ΔY and by increasing in the horizontal diameter an almost equal (but slightly less) amount ΔX. The horizontal diametrical increase is beneficial because it further compacts the sidefill soil and thus develops lateral support in a fashion similar to the way soil abutments offer support to a masonry arch bridge. The compacted soil actually becomes a masonry arch even though the soil is a low grade masonry using soil particles for bricks. The vertical decrease in diameter is beneficial because it relieves the pipe of vertical soil pressure concentrations and thus forces the soil to support the major share of the vertical load by arching action over the pipe.

Compressibility of the soil envelope is measured by the Soil Modulus, E', which is the ratio of soil pressure (stress) to soil deflection (strain) at a given soil compaction density, as shown in Chart 26. The degree of compaction of the soil envelope can be determined from a family of curves developed from laboratory tests. Chart 26 is typical of such curves and provides a general guide if laboratory data are not available to plot a family of curves for a specific soil type.

Deformation of buried flexible pipe becomes critical only when the pipe reaches that point of ring deflection beyond which it can no longer resist any increase in soil loading. By limiting ring deflection through proper soil compaction, the loading over a pipe is distributed through the soil and across the soil arch around the pipe. Thus the pipeline maintains its circular cross-section in stable soils and is protected against long term collapse.

Trench Construction and Terminology

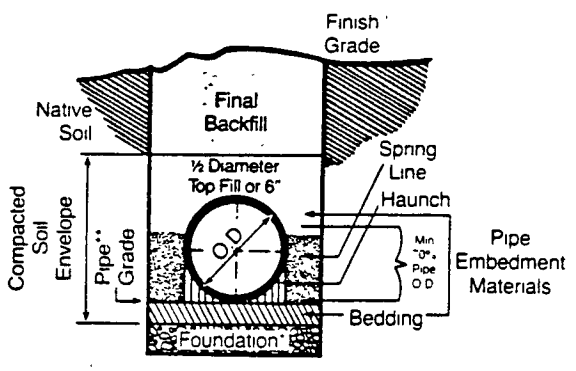

***In suitable soils the construction of a bedding and/or a foundation may not be required.**
****Gravity flow Driscopipe sewers may be accurately laid to grade using laser-beam scoping.**

Simplified Burial Design: A conservative estimate of the ability of Driscopipe pipelines to perform in a buried environment is found in Chart 24. It is based on a minimum 2:1 safety factor and 50 year design service life. A detailed burial design starts on page 37. The detailed design should be used for critical or marginal applications or whenever a more precise solution is desired.

Detailed Burial Design:
Design by Wall Crushing: Wall crushing would theoretically occur when the stress in a pipe wall, due to the external vertical pressure, exceeded the long-term compressive strength of the pipe material. To ensure that the Driscopipe wall is strong enough to endure the external pressure the following check should be made:

$$S_A = \frac{(SDR - 1)}{2} P_T$$

Values of E′

Based on Soil Type (ASTM D2321) and Degree of Compaction

Soil Type of Initial Backfill Embedment Material	Description	E′ (psi) for Degree of Compaction (Proctor Density, %)			
		Loose	Slight (70-85%)	Moderate (85-95%)	High (95%)
I	Manufactured angular, granular materials (crushed stone or rock, broken coral, cinders, etc.)	1,000	3,000	3,000	3,000
II	Coarse grained soils with little or no fines	N.R.	1,000	2,000	3,000
III	Coarse grained soils with fines	N.R.	N.R.	1,000	2,000
IV	Fine-grained soils	N.R.	N.R.	N.R.	N.R.
V	Organic soils (peat, muck, clay, etc.)	N.R.	N.R.	N.R.	N.R.

N.R = Not Recommended for use by ASTM D2321 for pipe wall support

Chart 24

SDR	Maximum Burial Depth, ft. in dry soil of 100 lbs/cu. ft.			Maximum External Pressure psi			Maximum Deflection, % after installation		
	Soil Modulus, psi*			Soil Modulus, psi*			Soil Modulus, psi*		
	1000	2000	3000	1000	2000	3000	1000	2000	3000
32.5	25	32	37	17	22	26	1.7	0.9	0.6
26	33	45	52	23	31	36	2.3	1.2	0.8
21	46	61	71	32	42	49	3.2	1.6	1.1
19	52	69	81	36	48	56	3.6	1.8	1.2
17	61	121	181	42	84	126	4.2	2.1	1.4
15.5	56	112	168	39	78	117	3.9	2.0	1.3
13.5	49	98	147	34	68	102	3.4	1.7	1.1
11	39	78	117	27	54	81	2.7	1.4	0.9
9.3	33	68	101	23	47	70	2.3	1.2	0.8
8.3	30	61	89	21	42	62	2.1	1.1	0.7
7.3	26	52	79	18	36	55	1.8	0.9	0.6

*assumes no external loads

Where. S_A = Actual compressive stress, psi
SDR = Standard Dimension Ratio
P_T = External Pressure, psi

Safety Factor = 1500 psi ÷ S_A where 1500 psi is the Compressive Yield Strength of Driscopipe.

Design by Wall Buckling: Local wall buckling is a longitudinal wrinkling of the pipe wall. Tests of *non-pressurized* Driscopipe show that buckling and collapse do not occur when the soil envelope is in full contact with the pipe and is compacted to a dense state. However, it can be forced to occur over the long term in *non-pressurized* pipe if the total external soil pressure, P_t, is allowed to exceed the pipe-soil system's critical buckling pressure, P_{cb}. If $P_t > P_{cb}$, gradual collapse may occur over the long term. A calculated, conservative value for the critical buckling pressure may be obtained by the following approximate formula. All pipe diameters with the same SDR in the same burial situation have the same critical collapse and critical buckling endurance

$$P_{cb} = 0.8\sqrt{E' \times P_c}$$

Where

P_t = Total vertical soil pressure at the top of the pipe, psi

P_{cb} = Critical buckling soil pressure at the top of the pipe, psi

E' = Soil modulus in psi calculated as the ratio of the vertical soil pressure to vertical soil strain at a specified density

P_C = Hydrostatic, critical-collapse differential pressure, psi

$$P_C = \frac{2E\,(t/D)^3\,(D_{MIN}/D_{MAX})^3}{(1-\mu^2)}$$

$$P_c = \frac{2.32\,E}{(SDR)^3}$$

Where (D_{MIN}/D_{MAX}) = .95
μ = Poission's Ratio
μ = .45 for Driscopipe
E = stress and time dependent tensile modulus of elasticity, psi

In a direct burial pressurized pipeline, the internal pressure is usually great enough to exceed the external critical-buckling soil pressure. When a pressurized line is to be shut down for a period, wall buckling should be examined.

Design by Wall Buckling Guidelines
Although wall buckling is seldom the limiting factor in the design of a Driscopipe system, a check of non-pressurized pipelines can be made according to the following steps to insure $P_t < P_{cb}$

1. Calculate or estimate the total soil pressure, P_t, at the top of the pipe
2. Calculate the stress "S_A" in the pipe wall according to the formula

$$S_A = \frac{(SDR - 1)\,P_t}{2}$$

3. Based upon the stress "S_A" and the estimated time duration of non-pressurization, use Chart 25 to find the value of the pipe's modulus of elasticity E in psi

Chart 25

Time Dependent Modulus of Elasticity for Polyethylene Pipe vs. Stress Intensity (73.4°F)

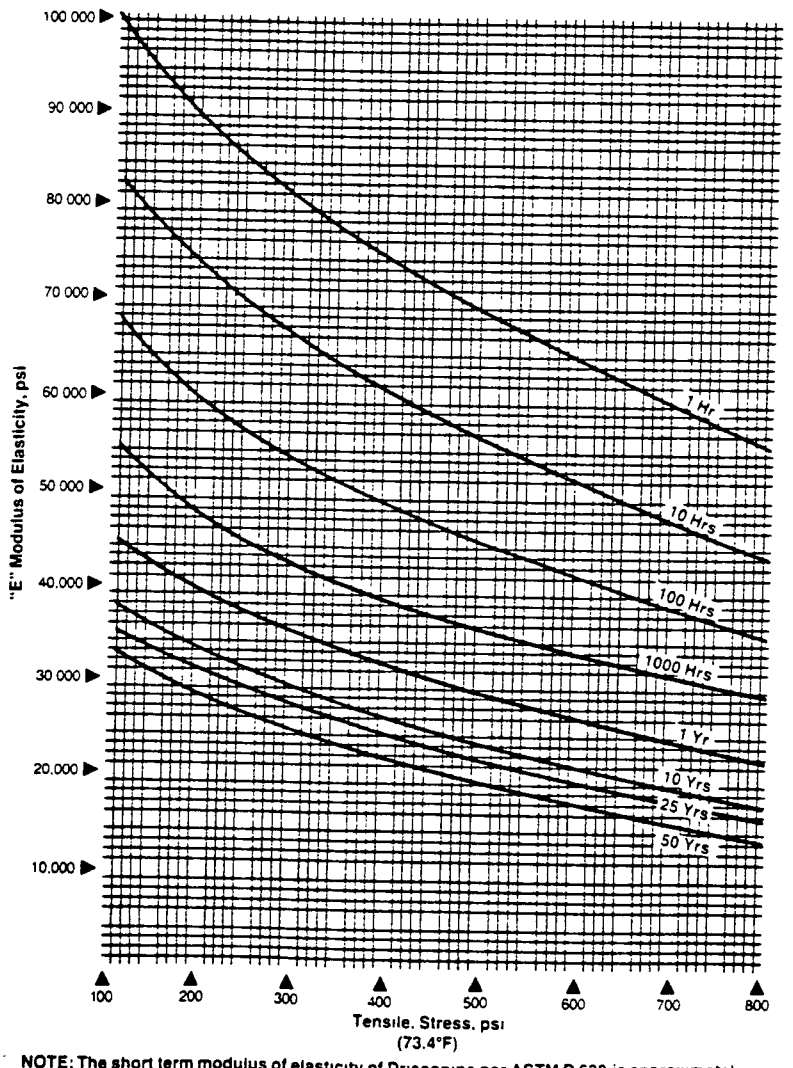

NOTE: The short term modulus of elasticity of Driscopipe per ASTM D 638 is approximately 100,000 psi. Due to the cold flow (creep) characteristic of the pipe material, this modulus is dependent upon the stress intensity and the time duration of the applied stress.

4 Based upon the pipe SDR and the value of the polyethylene modulus of elasticity. E, calculate the pipe's hydrostatic, critical-collapse differential pressure, P_C:

$$P_C = \frac{2.32\,(E)}{(SDR)^3}$$

5 Calculate the soil modulus. E', by plotting the total external soil pressure. P_t, against a specified soil density to derive the soil strain as shown in the example problem on Chart 26.

6 Calculate the critical buckling pressure at the top of the pipe by the formula.

$$P_{cb} = 0.8\sqrt{E' \times P_c}$$

7. Calculate the Safety Factor. $S.F. = P_{CB} \div P_t$
In burial applications. a safety factor of 1.0 may be considered a minimum because of the margin of safety provided by the arching action of the soil However, Driscopipe endorses using a more conservative value approaching or exceeding a 2.0 safety factor

8 The above procedures could be reversed to derive the minimum pipe SDR required for a given soil pressure and an estimated soil density However. this procedure should permit the engineer to optimize the system design quickly by examining several combinations

Chart 26

Plot of Vertical Stress-Strain Data for Typical Trench Backfill (Except Clay) from Actual Tests*

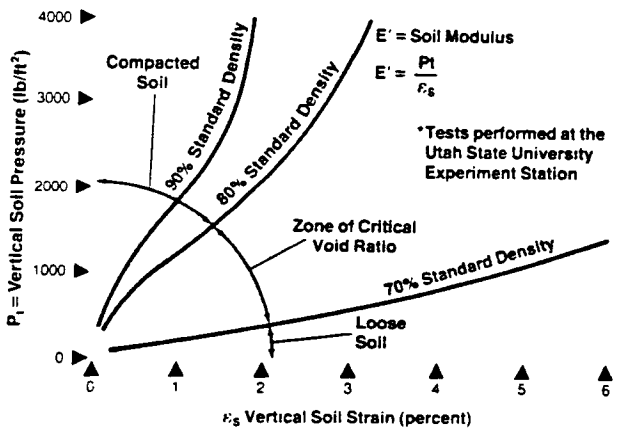

EXAMPLE
Find: E' @ 2000 PSF and 80% Density
Formula: $E' = P_t/\varepsilon_s$
Calculations: E' = 2000 PSF / .018 = 111111 PSF = 771 psi

Note: The curves shown on this chart are sample curves for a granular soil. If other types of soil are used for backfill. such as clay or clay loam. curves should be developed from laboratory test data for the material used. Soil pressures greater than 4000 psf may be examined by extrapolating the slope of the curve or by generating curves by testing at those higher soil pressures. Probable error of curves is about half the distance between adjacent lines.

Design by Ring Deflection: Ring deflection is defined as the ratio of the vertical change in diameter to the original diameter. It is often expressed as a percentage. Ring deflection for buried Driscopipe is conservatively the same as (no more than) the vertical compression of the soil envelope around the pipe. Design by ring deflection matches the ability of Driscopipe to accommodate, without structural distress, the vertical compression of the soil enveloping the buried pipeline. *Design by ring deflection comprises a calculation of vertical soil strain to ensure it will be less than the allowable ring deflection of the pipe.* See Chart 27. The tabulation shows that with lower values of SDR, the allowable deflection is less. For installations which require this thicker wall to resist the external soil pressure. actual ring deflection can easily be limited to the tabular values by proper compaction of the backfill around the pipe The recommended allowable deflection for the various SDR s are.

Chart 27

SDR	Allowable Ring Deflection
32.5	8.1%
26.0	6.5%
21.0	5.2%
19.0	4.7%
17.0	4.2%
15.5	3.9%
13.5	3.4%
11.0	2.7%

The allowable ring deflection of polyethylene pipe is a function of the allowable tangential strain in the outer surface of the pipe wall A conservative limit of 1-1½% tangential strain in the outer surface of the pipe wall due to vertical deflection of the pipe "ring" by soil compression can be understood by comparing two pipes of the same diameter but different wall thickness.

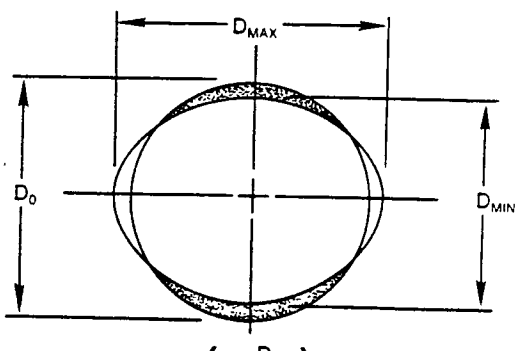

$$\% \text{ Ring Deflection} = \left(1 - \frac{D_{MIN}}{D_0}\right) \times 100\%$$

NOTE: 5% deflection decreases flow-area by ¼%. 10% deflection decreases flow-area by 1%.

Assume each of the pipes is equally deflected under loads required to achieve that result. The tangential surface strain developed in the thickwall pipe is much greater than the surface strain in the thinwall pipe. The tangential strain varies directly as the wall thickness (i e.: distance from the neutral axis) and is proportional to the amount of ring deflection. For a given ring deflection, the thicker the wall, the higher the strain.

Alternately, assume that each of the pipes is subjected to loads such that the tangential surface strain in the pipe's wall surface is equal for both pipes. For equal surface strain, the degree of vertical deflection of the pipe ring is different for the two pipes. Under these circumstances, the degree of deflection would be less for the thickwall pipe and greater for the thinwall pipe.

The percentage ring deflection based upon strain for a given SDR pipe can be calculated as follows:

$$\frac{\Delta Y}{D} = (0.25)(\varepsilon)(\frac{D}{t})$$

$$\frac{\Delta Y}{D} = (0\ 25)(\varepsilon)(SDR)$$

$$\frac{\Delta Y}{D} = (\ 0025)(SDR)$$

Where. ε = Tangential strain in the surface of the pipe ring due to deflection (conservatively 0 01 for Driscopipe)
D = Pipe OD, inches
t = Pipe wall thickness, inches
SDR = Standard Dimension Ratio, D/t
ΔY = Vertical deflection, inches

Driscopipe recognizes a tangential surface strain value of 0 01 due to ring deflection as a conservative yet responsible design parameter. This value is based upon the following

- Most of the deflection of a flexible pipe occurs within a few hours or a few days after final backfilling and increases very little thereafter This results in the development of the soil arch over the pipe which relieves the pipe of much of the vertical soil load by the arching action of the soil envelope and by the development of soil restraint at the sides of the pipe
- With an allowable long term stress of 800 psi and a time of approximately four days (100 hours) to reach the maximum allowable ring deflection, the tangential strain would be 2% to 2½% (See Chart 25 for time and load dependent modulus of elasticity to calculate strain = stress ÷ modulus.) Therefore, the use of 800 psi incorporates an additional margin of safety of over 2.0.
- An allowable strain value of 0.01 will allow for reasonable additional deflection due to disturbance of the backfill by earthquake fluctuations of the water table, etc.
- An allowable design strain value of 0.01 allows for the normal deviation of temperature encountered during installation.

In summary, a soil density can be specified for the bedding and initial backfill so that the vertical strain of the sidefill soil under the total soil pressure, P_v, at the top of the pipe will be no greater than the maximum allowable ring deflection for a given SDR pipe

Test Performance of Direct Burial Driscopipe The density of the bedding and soil envelope determines the performance capability of the pipe-soil system with regard to ring deflection. Tests conducted on Driscopipe at Utah State University by Dr. Reynold K Watkins show that Driscopipe will not buckle under ordinary conditions if the soil envelope is compacted and is in full contact with the pipe A virtual fail-safe installation can be assured if soil density is generally over 85% of Standard Proctor (AASHTO T-99) Density. With the backfill compacted to 90% of standard density, the depth of laying for Driscopipe is almost unlimited However, in the thinner wall series, due to the flexibility of the pipe, it is difficult to achieve the desired high soil density without buckling of the pipe cross-section, particularly when using backfill material other than sand or gravel.

Soil densities less than 90% are certainly adequate if depth of soil cover is in the range of most installations. Compaction to 75% standard density is relatively easy to achieve even in poor soils This would cover a large percentage of all installations However, 85% Standard Proctor Density (AASHTO T-99) should be considered a conservative minimum.

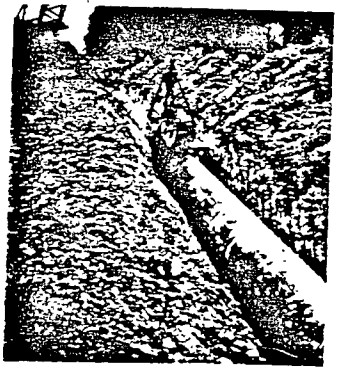

ASTM D-2321, Standard Recommended Practice for Underground Installation of Flexible Thermoplastic Sewer Pipe should be used as a guide for determining the method of placing and compacting the backfill.

Soil Density and Compaction· Standard tests are available for determining the density of the compacted soil. However, an experienced engineer can usually tell approximate density by his footmarks in the soil If he has to backkick the soil with a corner of his heel to leave an impression, then the density is probably greater than 95%. A corner heel impression while walking probably indicates a soil density of 90% A full heel print may indicate a density above 80%. A full footprint may indicate a density of 70%.

Various methods of compacting soil may be used, depending upon circumstances All soils can be compacted mechanically at optimum moisture content. ASTM and AASHTO publications describe how this can be done If the soil is granular, and if it drains quickly, it can be flushed into place using a water jet The soil should actually be moved into place by the jet. Using this method with coarse sand the density is well over 90%. Finer, granular soils are usually denser than 80% Granular soils that drain slower can be placed about the pipe, then flooded with water and allowed to drain This usually accomplishes at least 80% density even in fine sand If the backfill soil will not drain overnight then it is probably too fine to be compacted in this manner Very dry sand or gravel can be vibrated into place at a density over 90% if there is little or no silt in it Clean select aggregate will usually achieve 90% density or better just by dumping it around the pipe The decision as to compaction technique is usually a decision in economics whereby the cost of the soil is weighed against the cost of compacting it If the soil envelope requires mechanical compaction, economy may be realized by laying the pipe in a ditch only slightly wider than the pipe and specifying sand as the soil envelope material, provided the sand can be washed under the pipe haunches to offer proper support.

Soil bedding under the pipe requires attention Pressure concentrations, as caused by large rocks, should be avoided. If the native soil is of very poor quality, the trench should be overexcavated about ⅙ the diameter or 3 inches, whichever is greater, and backfilled with sand. Flushing of the soil into place assures adequate support under the haunches. Ponding of the soil is usually adequate. If backfill soil which requires mechanical tamping is used at the sides of the pipe, it may be necessary to use select fill under the haunches to assure adequate density

The effects of vibration or shock waves on soil compaction are much more complex than the effects of static loads and should be given careful and expert analysis. In some cases, vibration or shock may result in increased density in some backfill soils, resulting in increased stiffness of the pipe-soil system. However, if the pipe is installed below the water table, vibration may result in liquefaction of the backfill and adjacent soil, subjecting the pipe to hydrostatic loading which may result in possible hydrostatic failure of an apparently stable system.

Minimum Cover. There are no firm rules regarding minimum burial depth suitable for every installation However, the following guidelines may be helpful:

- Consider a burial depth below the local frost line
- Where there will be no overland traffic, the designer may wish to consider a cover of 18" or one diameter, whichever is greater
- Where truck traffic may be expected, the designer may wish to consider a burial depth of 36" or one diameter, whichever is greater
- Where heavy off-the-road truck or locomotive traffic is expected, the designer may wish to consider a minimum cover of 5 feet or more
- Pavements designed for heavy truck traffic substantially reduce the pressure transmitted through a wheel to the subgrade and, consequently, to the underlying pipe The pressure reduction is so great that, generally, the live load can be neglected. The pressure intensity, however, can be estimated, as will be discussed
- For heavy duty asphalt or flexible pavements, the reduction in intensity will be comparable to that for concrete pavements.
- For intermediate thicknesses of asphalt or flexible pavements, there is no generally accepted theory for estimating load distribution effects.
- Relatively thin pavements do not reduce the pressure transmitted from the wheel to the subgrade to any significant degree Such

pavements are generally considered as unsurfaced roadways for determination of the effect of live loads on buried pipe.

- In each case, the designer should check the installation to design for wall crushing, wall buckling and ring deflection. For a select fill soil envelope, the above cover values may be decreased.

Calculation of Total Soil Pressure by Components: Proper design of the polyethylene "pipe-soil" system balances the response of the pipe and surrounding soil against the total external soil pressure. Burial design by wall crushing, wall buckling and ring deflection as performance limits requires the accurate calculation of the total soil pressure, P_t, at the top of the pipe. Since there are many sources of soil pressure above the pipe, it is helpful to examine the total soil pressure as the sum of its components.

$$P_t = P_S + P_L + P_i$$

The total external soil pressure at the top of the pipe includes the sum of

P_S Total "Static Load" Pressure, often called dead-load pressure

P_L Total "Live Load" Pressure.

P_i Total effective external pressure due to negative internal operating pressure (vacuum).

Each of these soil pressure components is discussed and examples are calculated for use in a typical design problem.

P_S Total Static Load Pressure

There are three sources of static load pressure The [illegible] of these three pressure components constitutes the total static load pressure

$$P_S = P_{DE} + P_{WE} + P_B$$

Where P_{DE} is the static load pressure of dry or slightly moist earth.

P_{WE} is the static load pressure of saturated soil under the maximum, long term variable water table.

P_B is the static load pressure due to stationary surface structures such as buildings or foundations.

P_{DE}, Dry Soil Pressure

The weight of dry (or slightly moist) soil is approximately 100 lbs. per cu. ft. Every foot of depth of "dry" soil above the pipe exerts a pressure of 100 lbs per square foot. Thus, the dry soil component of the total static load pressure is the product of the density of the dry soil times the depth of the soil (in feet) from the ground surface to the top of the water table over the pipe.

P_{WE}, Water Saturated Soil Pressure

The water saturated soil component of the static load pressure is the product of the density of the water saturated earth, approximately 130 lbs per cu. ft., times the depth of the wet soil above the pipe.

Note. The density of water saturated soil is nearly 125-140 lbs /cu ft The density of virtually dry soil is nearly 100-120 lbs./cu. ft.

P_B, Static Structure Soil Pressure

In some applications, Driscopipe may be installed directly under or near a building foundation, an equipment foundation or some other sort of stationary structure If the structure is located over the pipeline, the pressure due to the weight of the structure is more concentrated and intense than if the structure is located at some distance away The distribution of vertical pressure into the soil below a static load is represented by a bell or bulb shaped surface. Refer to Chart 28. The maximum pressure exerted by the static structure is located at the centerline of the bulb The pressure decreases downwards in all directions and outwards from the center. The external soil pressure which a ground structure will exert on Driscopipe is greater when the pipe is buried near the structure and fairly shallow, and is less when the pipe is buried deeper or farther away A uniformly distributed load on the surface, such as a bearing pad, will also distribute the static load into the underground over a larger area and effectively reduce the soil pressure on a pipeline

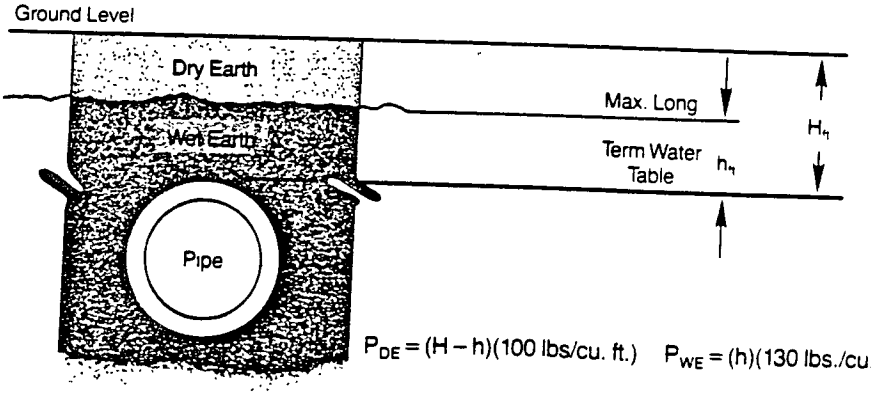

$P_{DE} = (H - h)(100 \text{ lbs/cu. ft.})$ $P_{WE} = (h)(130 \text{ lbs./cu. ft.})$

The Boussinesq theory is recommended for determining P_B for a concentrated load, W (See figure). By this theory, the load at the top of the pipe caused by a superimposed static load is evaluated as:

$$P_B = \frac{3WZ^3}{2\pi R^5}$$

Where: W = Superimposed surface load, pounds.
Z = Vertical distance from the point of load to the top of the pipe, feet.
R = Straight line distance from point of load to the top of the pipe, feet.
$R = \sqrt{X^2 + Y^2 + Z^2}$
X and Y = Horizontal distances at 90° to each other from point of load to the top of the pipe, feet.

Using this theory, a simplified chart can be used to show the underground pressure distribution caused by a 1000 lb superimposed surface load (Chart 28) The underground pressure for other superimposed surface loads can be calculated by multiplying the chart value by the load ratio per the example on Chart 28, page 43.

If the pressure on the pipe is caused by a uniformly distributed surface load (as opposed to a point load) such as a foundation, spread footing or bearing pad, the soil pressure on the pipe due to this uniform load can be determined by dividing the loaded area into a group of smaller individual areas so that each small area essentially becomes a point load. Then calculate the load for each incremental area and add the results to obtain the total soil pressure on the pipe caused by the foundation as a whole. This technique is illustrated in the following example. A further discussion of this method is found in *Soil Mechanics in Engineering Practice* by Terzaghi and Peck

Example: Total Static Load Pressure. P_S

Data: A 24" diameter sewer line is to be laid through a plant area with the top of the pipe being 10 ft. below grade. The maximum seasonal water table rises to within 7 ft. of the surface At one point, the pipeline is buried four feet from and parallel to the long side of an equipment foundation which is 6 ft. × 10 ft. and has a load bearing of 3000 psf at a depth of 3 ft below grade Determine the total static load pressure on the pipe at point "A".

Given. Density of dry soil = 100 lbs./ft.^{3}
Density of saturated soil = 130 lbs./ft^3
Depth of burial = H = 10 ft.
Depth of saturated soil = (h) = 3 ft
Depth of dry soil = (H − h) = 7 ft
Foundation bearing load = 3000 psf @ 3 ft. deep

Formula $P_S = P_{DE} + P_{WE} + P_B$

Where: $P_{DE} = (H - h)(\rho_{DE})$
$P_{WE} = (h)(\rho_{WE})$
$P_B = \sum_0 \frac{3WZ^3}{2\pi R^5}$
Z = Vertical height
$R = \sqrt{X^2 + Y^2 + Z^2}$

Note: For Simplified Calculation of P_B, use Chart 28

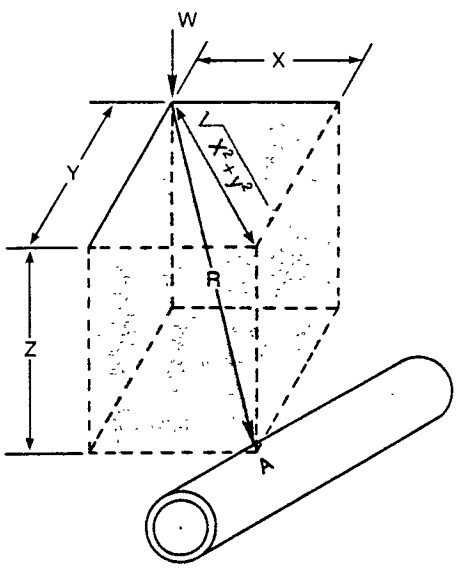

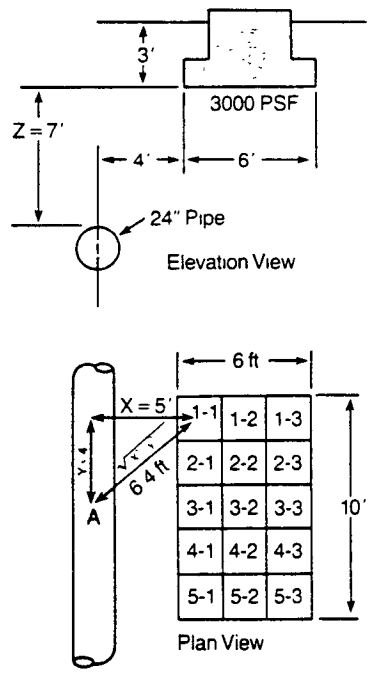

Chart 28

Unit Underground Soil Pressure Exerted by 1000 lb. Load

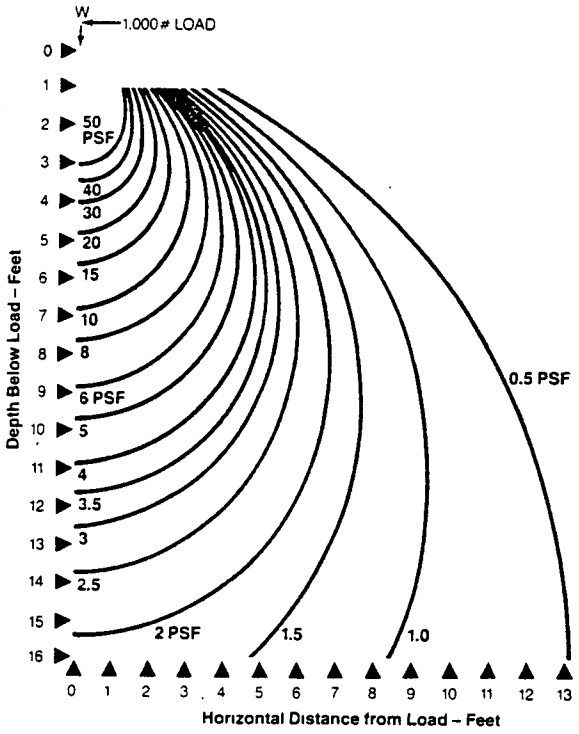

Example:

Find static soil pressure of 72,000 lb. weight on a pipeline buried 10 ft. deep and 6.5 feet away:

$P_B = \frac{72000}{1000} \times 2.0$ psf

P_B = 144 psf = 1 psi

Calculations:

P_{DE} = (10 – 3 ft.)(100 lbs./cu. ft.) = 700 psf

P_{WE} = (3 ft.)(130 lbs./cu. ft.) = 390 psf

P_B = 300 psf (See chart 29)

P_B = Sum of pressure contribution of each square calculated using Chart 28, divide foundation into 2 ft. × 2 ft squares @ 3000 psf.
(2 ft. × 2 ft. × 3000 psf = 12000 lbs. per square)

Summary. $P_S = P_{DE} + P_{WE} + P_B$

P_S = 700 + 390 + 300 = 1390 psf

P_S = 9.6 psi at point "A" on the pipe

P_1: Total Live Load Pressure:

Driscopipe may be buried in a variety of applications which may require it to pass below a plowed field, a highway, a railroad track or a plant road. Traffic operating over buried pipelines (or even near a pipeline) causes the earth to move slightly under its weight. This ever so slight movement is a dynamic load transfer from the vehicle into the ground. Although this might be considered a short-term loading, there will be those instances where the plant truck will be parked near the pipeline or the field tractor may end a day's work and shut down over the pipe or the train could end its travels over the pipeline. Where live loads are expected from traffic, rolling equipment, vibrations from operating machinery and impact, the following procedure and charts will provide for design of the required performance into those sections of the pipeline. Live loads are also evaluated by the Boussinesq theory, the same as superimposed static loads. However, the

Chart 29

Square	Weight	"Z" Vertical Depth	$\sqrt{X^2+Y^2}$ Horizontal Distance	Chart 28 Pressure Per 1000# Load	Soil Pressure on Pipe for 12000# Load Per Square
1-1	12,000	7 ft.	6.4	2.1 psf × 12 =	25.2 psf
1-2	12,000	7 ft.	8.1	1.2 psf × 12 =	14.4 psf
1-3	12,000	7 ft	9.8	.6 psf × 12 =	7.2 psf
2-1	12,000	7 ft.	5.4	3.0 psf × 12 =	36.0 psf
2-2	12,000	7 ft	7.3	1.5 psf × 12 =	18.0 psf
2-3	12,000	7 ft	9.2	.8 psf × 12 =	9.6 psf
3-1	12,000	7 ft	5.0	4.0 psf × 12 =	48.0 psf
3-2	12,000	7 ft	7.0	1.7 psf × 12 =	20.4 psf
3-3	12,000	7 ft.	9.0	.9 psf × 12 =	10.8 psf
4-1	12,000	7 ft.	5.4	3.0 psf × 12 =	36.0 psf
4-2	12,000	7 ft	7.3	1.5 psf × 12 =	18.0 psf
4-3	12,000	7 ft.	9.2	.8 psf × 12 =	9.6 psf
5-1	12,000	7 ft.	6.4	2.1 psf × 12 =	25.2 psf
5-2	12,000	7 ft.	8.1	1.2 psf × 12 =	14.4 psf
5-3	12,000	7 ft.	9.8	.6 psf × 12 =	7.2 psf
				P_B = Total ...	300 psf

wheel or axle weight should be increased by 50% to provide a pipe design with extra strength and endurance against the impact of these dynamic forces The load at the top of the pipe caused by a superimposed dynamic load at point "A" is evaluated as:

$$P_B = \frac{3WZ^3}{2\pi R^5}$$

Where: W = 1½ times the superimposed dynamic load, pounds

Z = Vertical distance from the point of load to the top of the pipe, feet.

R = Straight line distance from point of load to the top of the pipe, feet.

$R = \sqrt{X^2 + Y^2 + Z^2}$

X and Y = Horizontal distances at 90° to each other from point of load to the top of the pipe, feet

Unit underground pressures caused by a 1000 pound superimposed dynamic load is shown in Chart 28. Unit pressures for superimposed live loads can be obtained by multiplying the chart value by 1½ times the load ratio Alternately, for heavy truck or railroad traffic, Charts 30 and 31 summarize the total pressure due to the weight of the soil alone together with the weight of the rolling vehicle. An allowance for impact is included in each of these two charts.

These graphs show that. beyond an optimum depth, the total pressure on the pipe increases due primarily to soil pressure. At shallower depths the load intensifies because it is nearer the rolling equipment and the live load is not as well distributed

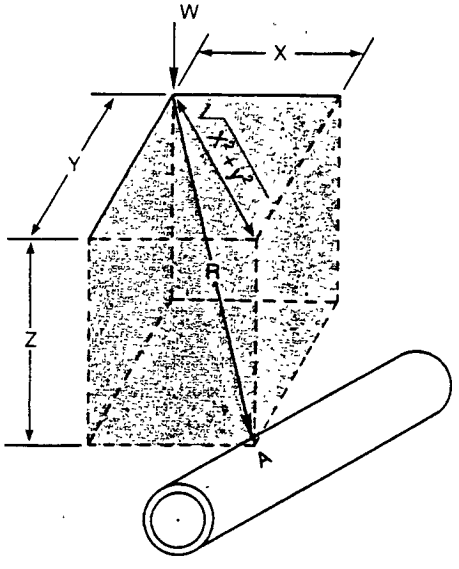

Note: If the live load pressure exceeds the capability of a specific SDR pipe for a specific traffic situation, the designer may want to consider the use of a steel or reinforced concrete casing to protect the pipeline.

P_i: Apparent External Pressure Due to Internal Vacuum:

Positive pressure generates a tensile hoop stress in the pipe wall. Under its influence the pipe will be trying to expand. The pressure of the soil around the pipe will be trying to crush the pipe as shown in this illustration.

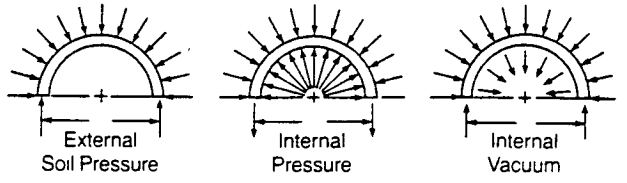

In a positive pressure situation, the value of P_i is negative and theoretically should be subtracted from the other two external pressure components of P_t because it is counteracting the external soil pressure However, a pipeline should not be designed such that internal pressure is required to support the pipeline to prevent collapse from soil pressure At some point in the system's operations, the pipeline will be shut down The support offered by positive pressure against collapse by external soil pressure should be viewed as a means of adding additional

Chart 30

H20 Highway Loading

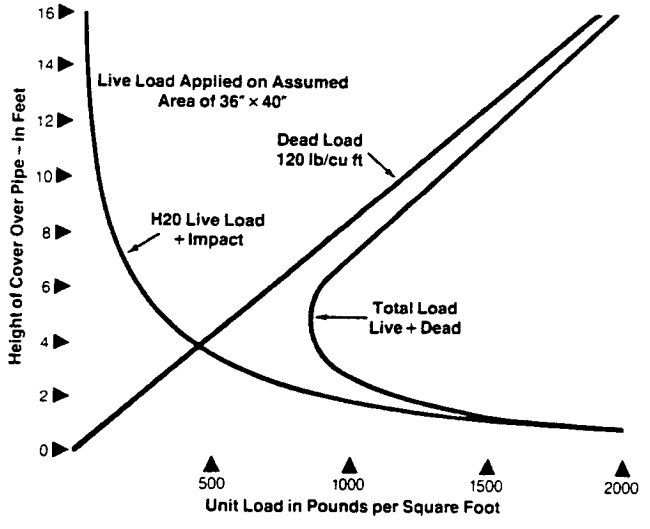

Note: The H20 live load assumes two 16,000 lb. concentrated loads applied to two 18" × 20" areas, one located over the point in question, and the other located at a distance of 72" away. In this manner, a truckload of 20 tons is simulated.

Source: American Iron and Steel Institute, Washington, D.C.

safety factors into the pipeline to eliminate any possibility of buckling. In certain instances when using thinner wall pipe, the system can be hydrostatically pressurized during soil backfilling, compacting or grouting operations to make the pipe perfectly round and concurrently to inspect the integrity of the joints.

Alternately, a negative pressure (vacuum) generates a compressive hoop stress in the wall of the pipe and assists in trying to collapse the pipeline. Thus, the value of P_i under vacuum conditions is positive and is added to the other two external pressure components of P_t. An internal vacuum generates pressure (expressed in P.S F.) equal in magnitude to the absolute value of the vacuum in P S F The maximum apparent external pressure (P_i) due to a vacuum inside the pipe is 14 7 psi or approximately 2100 psf.

Summary The calculation of the total external soil pressure, P_t, is simple and direct. It is composed of three components: pressure due to static loads, pressure due to live dynamic loads and apparent pressure due to any internal vacuum.

Example·

Assume a 24" diameter industrial sewer line is to be laid through a hilly plant area 10 feet below grade The maximum seasonal water table rises to within 7 ft of the surface. At one point the pipeline is buried 4 ft.

Chart 31

Cooper E-80 Live Loading

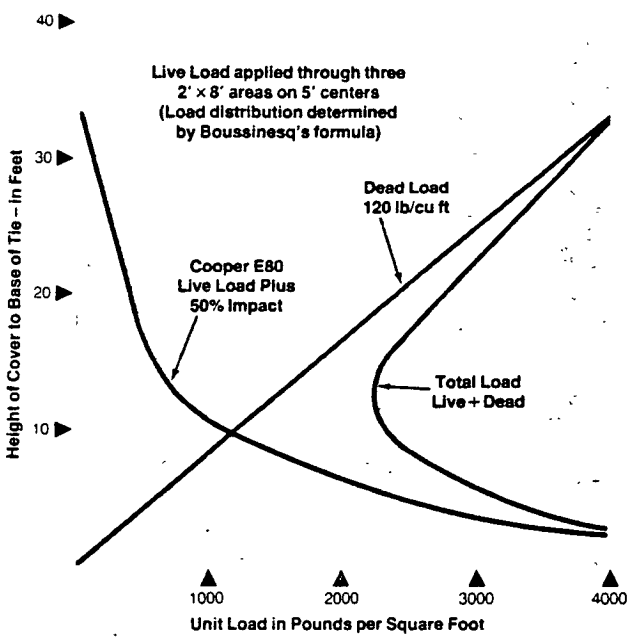

Note: The Cooper E-80 live load assumes 80,000 pounds applied to three 2' × 8' area on 5' centers such as might be encountered through live loading from a locomotive with three 80,000 pound axle loads.

Source: American Iron and Steel Institute, Washington, D.C.

from and parallel to the long side of an equipment foundation which is 10 ft. long by 6 ft. wide and has a load bearing of 3000 psf at a depth of 3 ft. below grade. A plant access road adjacent to the equipment foundation passes parallel to the pipeline 4 ft. away. Trucks using this access road have a maximum axle load of 32,000 lbs. (16,000 lbs. wheel load – H_{20} design load). Due to the hilly terrain, a gravity induced siphon effect develops a partial vacuum of (minus) 3 psi. Calculate the total external pressure, P_t, on the pipe at point "A".

Formula. $P_t = P_S + P_L + P_i$

Calculations:

P_S Static load Pressure Component

Referring to the problem illustrated earlier in this section, the total static load pressure was calculated as follows.

$P_S = P_{DE} + P_{WE} + P_B$

$$P_S = ((H-h)\rho_{DE}) + ((h)\rho_{WE}) + \left(\sum_0^1 \frac{3WZ^3}{2\pi R^5}\right)$$

P_S = 700 psf + 390 psf + 300 psf

P_S = 1390 psf

P_L Dynamic Load Pressure Component·

Referring to Chart 30, the soil pressure exerted by the truck's weight can be estimated by reading the H_{20} live load curve at a 10 ft. depth However, it can be more accurately calculated using the Boussinesq Equation.

$$P_{L_1} = \frac{3WZ^3}{2\pi R_1^5} \qquad P_{L_2} = \frac{3WZ^3}{2\pi R_2^5}$$

$$P_{L_1} = \frac{3 \cdot 24000 \cdot (10)^3}{2 \cdot \pi \cdot 10\ 8^5} \qquad P_{L_2} = \frac{3 \cdot 24000 \cdot 10^3}{2 \cdot \pi \cdot 14\ 14^5}$$

P_{L_1} = 78 psf $\qquad P_{L_2}$ = 21 psf

Where: W = wt of vehicle wheel load times 150%

= 16000 lbs × 150%

= 24000 lbs

Z = 10 ft.

$R_1 = \sqrt{X^2 + Y^2 + Z^2}$

$R_1 = \sqrt{4^2 + 10^2}$

$R_1 = \sqrt{116 \text{ ft.}}$

R_1 = 10 8 ft. inside wheel

$R_2 = \sqrt{X^2 + Y^2 + Z^2}$

$R_2 = \sqrt{10^2 + 10^2}$

$R_2 = \sqrt{200 \text{ ft.}^2}$

R_2 = 14.14 outside wheel

Note: P_L can also be obtained from Chart 28 using W (total impact loading = 24,000 lbs.), Z (depth below load, 10 ft.), $\sqrt{X^2 + Y^2}$ (horizontal distance from load) = $\sqrt{4^2 + 0^2}$ = 4 for one wheel and $\sqrt{X^2 + Y^2}$ = 10 ft. for the other wheel.

P_i: Apparent External Pressure Due To Vacuum:

3 psi × 144 = 432 psf

TOTAL EXTERNAL PRESSURE: $P_t = P_S + P_L + P_i$

P_t = 1390 psf + 99 psf + 432 psf = 1921 psf = 13.34 psi

Burial Design Guidelines: By combining the Burial Design Considerations with the Total External Soil Pressure, calculated by components, the designer can select the proper pipe SDR and specify the soil density to engineer into the pipeline the desired performance of the "pipe-soil" system. The following guidelines are presented for evaluation when designing a specific Driscopipe system Because various parameters are available, in different situations, the guidelines may be approached in a mixed order or the equations may require mathematical rearrangement These guidelines, along with the following notes and sample problem, should be helpful:

1. Calculate by components the total external soil pressure, P_t, at the top of the pipe.
2. Examine Short Term Wall Crushing by calculating the compressive stress in the wall of the pipe at the springline:

   $$S_A = \frac{(SDR - 1)\,P_t}{2}$$ (a) If S_A<1500 psi proceed to #3 (b) If S_A>1500 psi consider a heavier pipe wall

3. Calculate the critical-collapse pressure, P_C, from this formula using the time dependent modulus of elasticity, E, rated at the stress level calculated above in #2 (see Chart 25).

   $$P_C = \frac{2\,32\,E}{(SDR)^3}$$

4. Examine Wall Buckling of the pipe-soil system. By assuming the critical buckling pressure, P_{cb}, equals the pressure at the top of the pipe, P_t (see #1), and by using the critical pressure, P_C, calculated in #3, the basic soil modulus, E′, required to resist buckling can be calculated by·

   $$E' = \frac{(P_{cb})^2}{.64\,(P_C)}$$

5. To safeguard against wall buckling, multiply E′ by a reasonable safety factor (S.F.) equal to or greater than 2 0.

   $$E'_{MIN} = (E')(S.F.)$$

6. Calculate pipe deflection based upon the principle that its deflection will be the same as the backfill surrounding the pipe under the influence of the soil pressure at the top of the pipe.

   $$\%\ \text{Soil Strain} = \xi_S = \frac{P_t}{E'_{MIN}} \times 100$$

7. Examine allowable Ring Deflection for the specific SDR under consideration to insure the pipe deflection (#6) is less than the allowable deflection for that SDR (See Chart 27).
   - If the actual deflection exceeds the permissible value, increase E′, the soil strength modulus, and recalculate #6. The other alternative is to consider another SDR at #1
   - If the predicted deflection is less than the allowable value, proceed to #8.
8. Specify the primary backfill soil density matched to the soil pressure, P_t, and the calculated soil strain, ξ_S, by using soil stress/strain curves developed from field specimens or from Chart 26 on page 38.

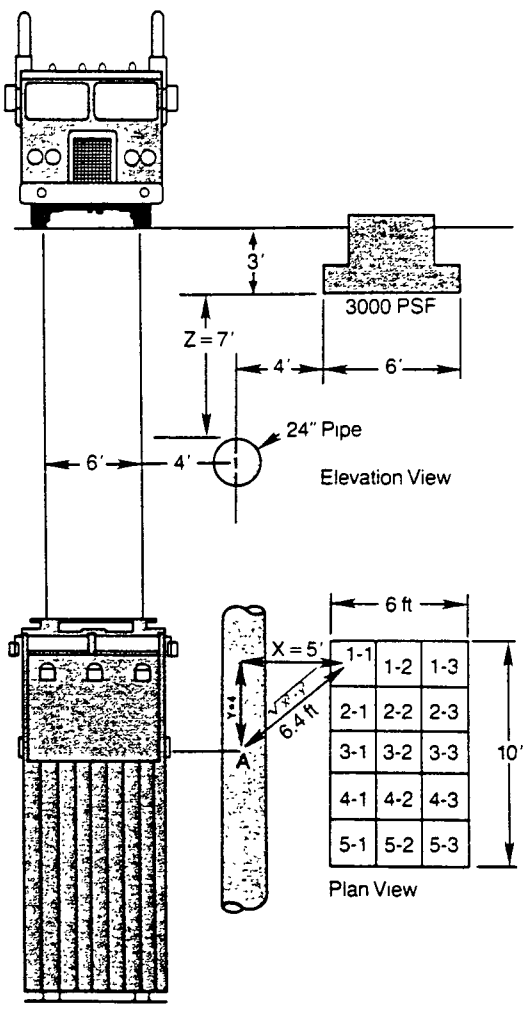

EXAMPLE.

GIVEN: Assume a 24" diameter SDR 32.5 industrial sewer line is to be laid through a hilly plant area 10 feet below grade with a soil temperature of 60°F. The maximum seasonal water table rises to within 7 ft. of the surface. At one point the pipeline is buried 4 ft. from and parallel to the long side of an equipment foundation which is 10 ft. long by 6 ft. wide and has a load bearing of 3000 psf at a depth of 3 ft. below grade. A plant access road passes 32,000 lbs. axle load trucks, parallel to but 4 ft. away from the pipeline adjacent to the equipment foundation. Due to the hilly terrain, a gravity induced siphon effect develops a partial vacuum of (minus) 3 psi. Specify a burial design to provide a 50 year service life.

FIND:
- Calculate, by components, the total external pressure, P_t, at the top of the pipe.
- Examine the Wall Crushing Safety Factor
- Calculate the minimum Soil Strength Modulus, E', required to prevent wall buckling.
- Examine the Ring Deflection based upon P_t and an E'_{MIN}.
- Specify the required soil density.
- Finalize the Specification.

CALCULATIONS AND NOTES:

- Using the calculations previously detailed:

$$P_t = P_S + P_L + P_i = 1921 \text{ psf} = 13.34 \text{ psi}$$

- Wall Crushing Safety Factor:

$$S_A = \frac{(31.5)(13.34)}{2} = 208 \text{ psi}$$

$$S.F. = \frac{1500 \text{ psi}}{208 \text{ psi}} = 7.2:1$$

Note: The stress is quite low and the safety factor high so the pipe will perform without wall-crushing.

- Minimum Soil Strength, E':

(1) $$P_C = \frac{2.32\,E}{(SDR)^3}$$

$$P_C = \frac{(2.32)(32{,}875)}{(32.5)^3}$$

$P_C = 2.22$ psi @ 208 psi for 50 years @ 60°F.

Where: E = 27,750 psi @ 208 psi stress for 50 years and 73.4°F.

E = 32,875 psi @ 208 psi stress for 50 years and 60°F. (Refer to "Temperature Considerations")

(2) Assume: $P_{cb} = P_t$

(3) $$E' = \frac{(P_{cb})^2}{.64\,(P_C)} = 125 \text{ psi}$$

(4) Apply a reasonable Safety Factor:

$E'_{MIN} = (125 \text{ psi}) \times (S.F.)$

$= 125 \times 3.0$

$E'_{MIN} = 375$ psi @ 3:1 Safety Factor

- Pipe Deflection Equals Soil Strain:

$$\varepsilon_S = \frac{P_t}{E'_{MIN}} \times 100\% = \frac{13.34}{375} \times 100\% = 3.6\%$$

Note: Since the allowable pipe deflection per Chart 27 is 8.1%, the ring deflection safety factor is 2.25:1.

- From Chart 26, 3.6% soil strain occurs under the influence of 1900 psf soil pressure when the soil density is approximately 73%.
- Final Design Specification:
  (1) Minimum soil strength modulus E' should be 375 psi.
  (2) Minimum soil compaction requirement should be 73% standard density; 80% to 85% would be better.
  (3) Driscopipe SDR 32.5 would be satisfactory for the design.

Summary.

Generally speaking, when the primary backfill immediately surrounding the pipe is compacted to 85% or better density, wall crushing, wall buckling and ring deflection limitations are seldom exceeded. By checking these design parameters, the engineer can calculate the safety factors involved and insure short term and long term performance of the buried pipeline subjected to compressive external pressure when the pipeline is *not pressurized*. When the pipeline is pressurized, the internal pressure usually far exceeds the external soil pressure and in such cases the internal pressure will exceed tendencies to wall crushing, wall buckling and ring deflection.

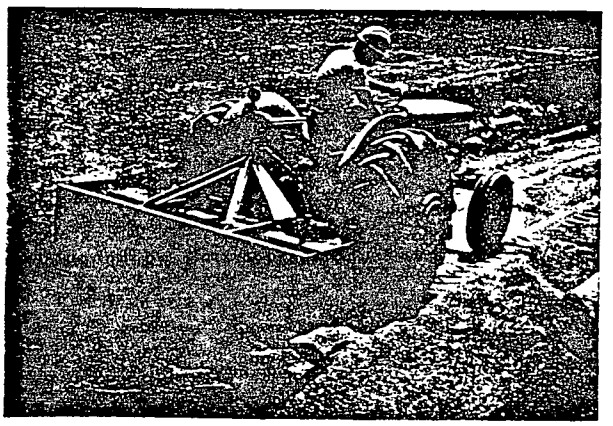

Type 4: Marine Pipelines

Introduction: The primary design criteria for submerged and weighted pipelines are (a) the critical collapse pressure for empty or partially full pipelines, (b) weight of the concrete anchor and (c) spacing of the concrete anchors. Even though a marine pipeline is sometimes buried in an underwater trench, any support that the pipeline receives from the backfill material should be ignored for design purposes.

Driscopipe can be buried, rest on the bottom or floated on the surface of lakes, rivers, marshes or oceans. Its characteristics of flexibility, light weight, inertness to saltwater and chemicals, continuous pipeline due to butt fusion and the ability to float even when full of water give polyethylene many advantages.

The design of the external weights for water installations is a matter of preference. The weights are normally made to order by precast concrete manufacturers or by the contractor at the job site. These weights can be designed to hold the pipe away from the bottom using weights as legs or in a trench or directly on the bottom It is advisable for weights for pipes larger than 12" to have reinforcing steel for strength. It is also recommended that one turn of rubber gasketing material or 2 to 3 turns of 5 to 10 mil polyethylene sheet be wrapped around the pipe under the weight to act as a cushion and prevent damage to the pipe.

Critical Collapse Pressure: A marine pipeline does not receive any structural support from the surrounding water Therefore, an empty or partially filled non-pressure pipeline is subject to long-term hydrostatic collapse. A marine pipeline that is full of water at all times, such as an outfall or intake line, is not subject to collapse because the internal pressure will equal the external pressure at any specific depth of water.

Chart 32, shown below, gives design levels for empty or partially filled marine pipelines These pressures represent the safe maximum differential pressures which can be applied to Driscopipe without buckling or collapsing the pipe. These values are based on extensive long-term differential pressure test data on actual lengths of pipe. The collected test data were mathematically analyzed and used to calculate performance limits for all pipe SDR s considering various degrees of original ovality. The values in Charts 32 and 33 are the calculated lower tolerance limits derived from the test data and represent the level of external differential pressure at which the risk of pipe collapse becomes insignificant Pipe collapse in this test work was defined as that point where the major deflected diameter was 20% greater than the original undeflected diameter. Copies of the test results and data analysis are available upon request.

Chart 33

Multiplier for Temperature Rerating External Pressure Differential

Temperature °F	Temperature °C	Multiplier
50	10	1 14
73.4	23	1.00
100	38	0 79
120	49	0 62
140	60	0 50

Anchor Weights: The dry land weight of the concrete anchors may be calculated from the following formula The designer should note that concrete varies in density between 140 lbs /cu ft. and 155 lbs / cu.ft and the "K" constant is an anchor constant . Where K = 1 0, neutral buoyancy is achieved. Where K = 1.3, the pipe should be adequately anchored for lakes, ponds and streams Where current or tides are encountered, the designer may want to increase the K value to nearly 1.5 depending upon design factors and his judgment.

$$Wt^{Conc} = \frac{L(Wt^{Driscopipe} + Wt^{Product}) - (K \times Den^{Water} \times V(out)^{Driscopipe} \times L)}{\left(\frac{K \times Den^{Water}}{Den^{Conc}}\right) - 1}$$

Chart 32

Maximum External Hydrostatic Pressure Differential (on Externally Unsupported Pipe)

Feet of Water Head @ 73.4°F

Service Life	Pipe SDR 7	9.3	11	15.5	17	19	21	26	32.5
1 day	437	337	202	83	65	48	36	18	10
1 month	249	192	147	54	34	28	22	10	6
1 year	232	180	111	50	32	23	17	10	5
50 years	204	159	97	44	29	22	17	9	4

Based on critical collapse testing of actual pipe samples.
Full Vacuum is 34 feet of water

Where:

Wt^{Conc} = Concrete Dry-Land Weight, lbs.

$Wt^{product}$ = Weight of product being carried, lbs./ft. of pipe

$= Den^{Product} \times V^{Driscopipe}{}_{(inside)}$

$Wt^{Driscopipe}$ = Pipe weight, lbs/ft.

K = Constant (1.3 to 1.5)

L = Spacing for weights, ft. (10 to 15 ft. is recommended)

$V^{Driscopipe}{}_{(out)}$ = External volume of the pipe, cu. ft./ft.

$V^{Driscopipe}{}_{(inside)}$ = Internal volume of the pipe, cu. ft./ft.

Den^{Water} = Density of the water, lbs./cu. ft.

Den^{Conc} = Density of the concrete, lbs./cu.ft

$Den^{product}$ = Density of product being carried, lbs./cu. ft.

The usual method of installation of a Driscopipe pipeline is to float the pipeline into position on the water surface and then sink it slowly in a very gentle "S" configuration. For those applications where the pipeline will not always be full of liquid or where the product is lighter than water, very heavy weights will be required and the designer will want to ensure the pipeline will float during installation. If the pipe will not float, floats should be attached at intervals before towing the pipeline onto the surface of the water. The designer can refer to the *Systems Installation* brochure for concrete anchor designs as well as installation procedure guidelines.

EXAMPLE:

Install a 16" line across a freshwater lake to carry a brine solution with a density of 72.9 lbs/cu. ft. Weights shall be fabricated from 155 lbs/cu. ft. concrete and be placed 12 feet on centers. Maximum depth of water is 16 feet.

Pipe = 16" dia. – SDR 15.5 (includes 2.5 safety factor against hydrostatic collapse)

L = 12 ft.

$Wt^{Driscopipe}$ = 20.64 lbs./ft.

K = 1.3

Den^{Water} = 62.4 lbs./cu. ft.

$$V^{Driscopipe}{}_{(out)} = \pi R^2 = \pi\left(\frac{16}{2 \times 12}\right)^2 = 3.14 \times .667^2 = 1.39 \text{ cu. ft./ft}$$

Den^{Conc} = 155 lbs./cu. ft.

$$V^{Driscopipe}{}_{(inside)} = \pi R^2 = \pi \frac{(16 - 2(1.023))^2}{2 \times 12} = 3.14 \times .58^2 = 1.06 \text{ cu. ft./ft.}$$

$Den^{product}$ = 72.9 lbs./cu. ft.

$Wt^{product}$ = 72.9 × 1.06 = 77.27 lbs./ft

$$Wt^{Conc} = \frac{12(20.64 + 77.27) - (1.3 \times 62.4 \times 1.39 \times 12)}{\frac{1.3 \times 62.4}{155} - 1} = 371 \text{ lbs}$$

Chart 34

Maximum Span Between Concrete Weights for Underwater Driscopipe Pipelines

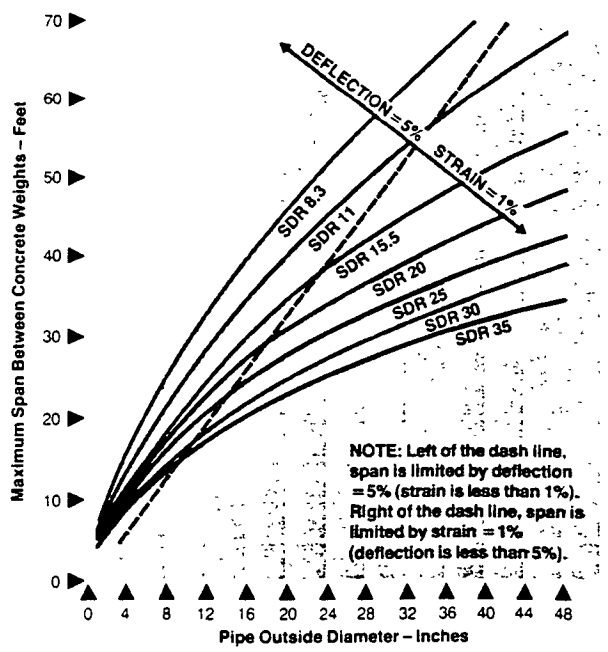

Anchor Spacing: The weight of the anchors spaced at given intervals develops a structural bending moment in the pipe during installation. The interval span must be limited to prevent deflection of the pipe between anchors (or strain in the pipe at the anchors) from becoming excessive. By examining the empty submerged pipeline as an integrated series of simple beams between anchors, the interval spacing between anchors can be determined for a given pipeline SDR when either deflection or strain is recognized as the limiting factor Chart 34 illustrates the maximum span between concrete weights for all available diameters and SDRs. Although the allowable spacing may be in excess of 10 to 15 feet, many users have sized their concrete anchor weights based upon this interval in order to minimize handling and installation problems.

Type 5: Water Surface Pipelines

Introduction Driscopipe is naturally buoyant When filled with water, it floats just at the water's surface Empty Driscopipe crossing a body of water will float on the water due to the buoyancy generated by water displacement. Water surface pipelines encompass floating, water-surface or submerged neutrally-buoyant pipelines

Additional information discussing the buoyancy characteristics and maximum submersion depths of Driscopipe is available upon request. The text fully describes the buoyant float capacity of empty and partially filled Driscopipe, how to weight the pipe to neutral buoyancy and how deep Driscopipe may be submerged under various operating conditions

Type 6: Marsh Pipelines

Introduction: Marshy installations encompass the broadest spectrum of soil conditions The performance of Driscopipe is perhaps more suited to this type of environment than other piping materials due to its ability to accommodate the variable soil conditions more readily than pipelines of other materials.

A basic guideline to follow in marshy areas is to survey the pipeline route to determine the soil conditions in specific areas Where the ground is solid, it can be treated as a buried pipeline. Where there is a firm bottom, the installation can be treated as an anchored marine pipeline Where the area is boggy, the pipeline can be weighted to neutral buoyancy so that it neither floats nor sinks and then buried at a depth in line with the rest of the pipeline.

Variable soil conditions may require the pipe's SDR to be varied to match the performance characteristics of Driscopipe (such as external hydrostatic pressure capability or ring deflection) to the environmental challenge. For example, in those silty areas where the soil is highly fluidized offering no compaction or support to the pipe, the selection of the pipeline SDR may be examined by considering the mucky soil as a high specific-gravity fluid solution exerting a heavier external hydrostatic pressure than clear water. The predominant criterion for selection would be the critical buckling differential pressure of a specific SDR pipe in such a case when considering the pipeline to be a submerged, neutrally buoyant pipeline.

When the appropriate Driscopipe SDR has been designed to match the conditions in each area, a properly installed pipeline can successfully cross marshy terrain offering reliability and long term performance.

Type 7: Insert Renewal Pipelines

Introduction. Insert renewal, or slip lining, has proven to be the most economical and successful method of permanently restoring deteriorated sewer systems It is the quickest, most effective method of repair Although a smaller diameter is slipped into an existing main, the excellent flow properties of Driscopipe will restore the capacity of the system while the strong, butt-fused joints eliminate groundwater infiltration, thus reducing the quantity of sewage to be transported Because the flow characteristics of Driscopipe are superior to clay or

concrete, a smaller diameter pipe can be specified, thus often reducing time, labor, construction and capitalization costs.

Performance Capability: When Driscopipe is used as a non-pressurized slip liner, the engineering group must examine the capability of the pipe to endure any short-term or long-term external hydrostatic head without the benefit of circumferential soil support. In certain instances, the external water table infiltrates the annulus between the old sewer and the new slip liner. The pipeline must be capable of supporting that external hydrostatic head as a pressure differential across the pipe wall. The capability of the pipe to support an external pressure difference between the inside and the outside of the pipe is known as the pipe's critical-collapse, hydrostatic, differential-pressure capability

When a *pressurized* forced main is in operation, the internal pressure usually far exceeds the external hydrostatic head In this instance there should be little concern regarding the pipe's critical buckling capability except when the system is shut down for a short time Then, the short-term critical collapse capability could be applied per Chart 32 on page 48.

In gravity flow systems, there is no supporting, internal pressure The pipeline must be able to support any external water table over the long-term per Chart 32 (Note If there are areas where siphon (vacuum) effects are anticipated, the internal vacuum (in feet of water) must be added to the external hydrostatic head as an apparent external pressure.).

Where a short-term flood situation may develop, the engineer may wish to use the short-term critical collapse Chart 32 as the design guideline However, depending upon circumstances when a flood occurs, the floodwater pressure inside the sewer liner usually equals the external hydrostatic head on the pipe resulting in zero differential-pressure.

Safety Factor The values presented in Charts 32 and 33 (Pg 48) represent the safe maximum differential pressures which can be applied to Driscopipe without buckling or collapsing the pipe These values are based on extensive long-term differential pressure test data on lengths of pipe. The collected test data were mathematically analyzed and used to calculate performance limits for all pipe SDRs considering various degrees of original ovality. The values in Charts 32 and 33 are the calculated lower tolerance limits derived from the test data and represent the level of external differential pressure at which the risk of pipe collapse becomes insignificant.

Pipe collapse in this test work was defined as that point where the major deflected diameter was 20% greater than the original diameter. All data pertains to a temperature of 73.4°F Copies of the test results and data analysis are available upon request.

The above study also indicates that when the clearance between the old sewer and the new sewer is such that the major diameter of the liner cannot deflect to beyond 120% of original O.D., the critical-collapse differential-pressure rating can be increased about 20% due to the support offered by the old main against collapse. If the liner deformation were limited to less than 5% by contact with the old sewer main, the critical collapse differential pressure rating could be at least doubled. Although the support offered by the old sewer casing increases the performance capability of the pipe, Driscopipe recognizes this effect *only* as an improved margin of safety until such time as field experience or sufficient test data is available to draw firm conclusions. In the meantime, Phillips Driscopipe suggests the designer consider adhering to the maximum safe differential pressure ratings of unsupported pipe given in Charts 32 and 33. A clearance of 10% between the O D. of the slip liner and the ID of the old main is usually suggested to provide easy installation of the liner without damage

Summary: The light weight, low maintenance, chemical and biological inertness, joint integrity, high flow properties, special fittings, longer pulls, ease of installation and greater resistance of Driscopipe to critical collapse make it the priority choice for sewer system installation or renewal. System installation practices are adequately treated by ASTM Standard F 585-78 and the booklet by PPI titled *Renewing Sewers with Polyolefin Pipe*. Both are available upon request.

Note: When slip lining sewers, allow the pipe to normalize to the temperature of the ground as well as recover any imposed stretch (usually about 8-10 hrs) before cutting the pipe to length between manholes To do otherwise without securing the pipe at each end might cause the pipe to contract or shrink, withdrawing inside the dilapidated sewer

APPENDIX

Chart 35

Resistance of Valves and Fittings to Flow of Fluids

Example: The dashed line shows that the resistance of a 6-in. standard elbow is equivalent to approximately 16 ft of 6-in. standard pipe.

Note: For sudden enlargements or sudden contractions, use the smaller diameter, d on the pipe-size scale. Head loss through check valves varies with types manufactured. Consult with manufacturer for correct values.

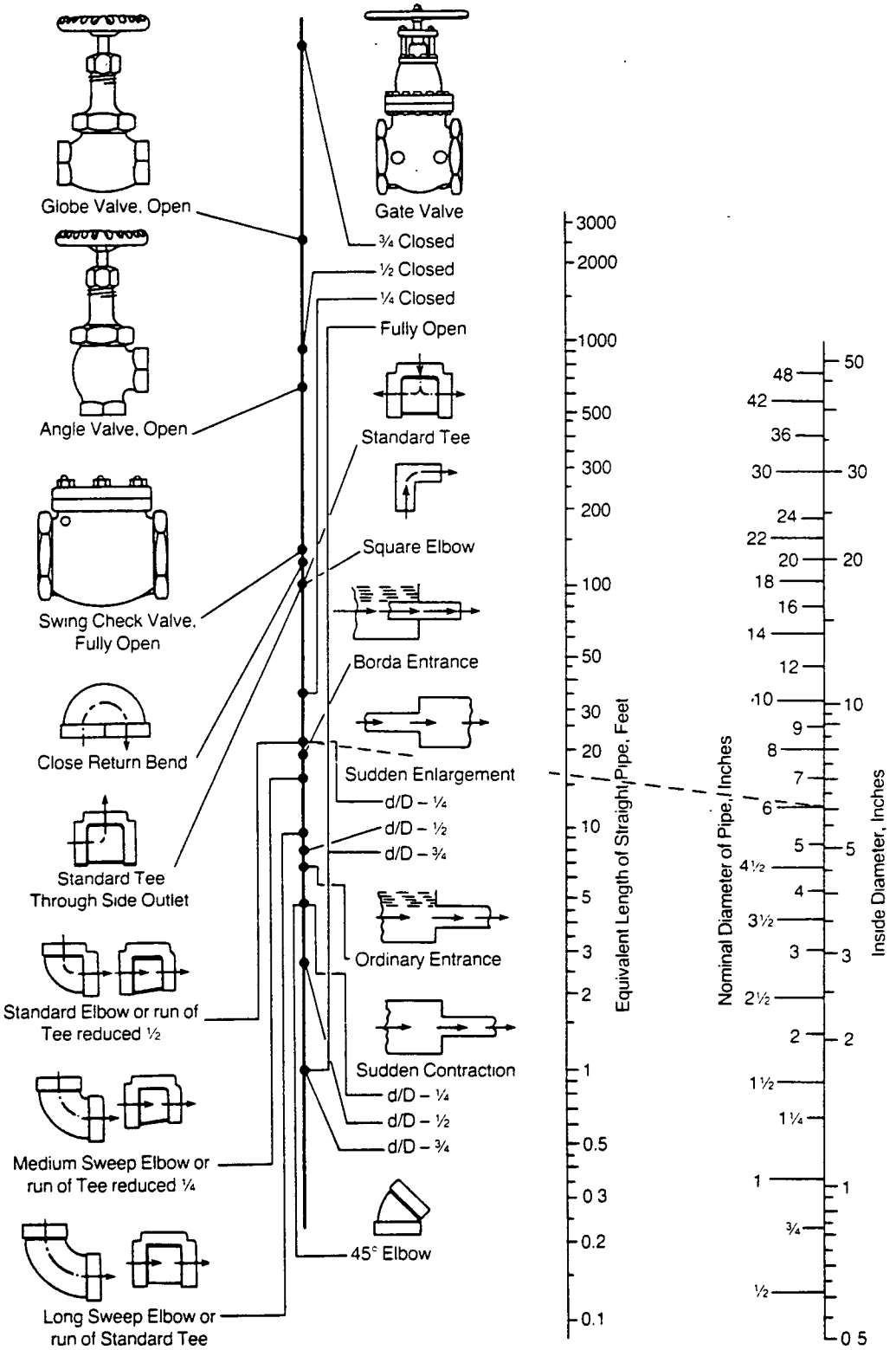

Courtesy of Crane Co

Derivation

Slip-Lining Ratio of Diameters for Equal Flow at Same Slope

Driscopipe I.D vs I.D of Concrete
Driscopipe I D vs. I.D. of Clay Tile

Formula: $V = \frac{.284}{\eta} R_h^{2/3} S^{1/2}$

Definitions:

Q = Flow rate (GPM)

A = Area of pipe I.D. = $\frac{\pi D^2}{4}$ (sq in.)

V = Velocity of flow in pipe (ft/sec)

R_h = Hydraulic radius = $\frac{D}{4}$ for full flow (inches)

η = Dimensionless Manning Roughness Coefficient

D_d = I.D of Driscopipe

D_S = I.D of Sewer

For equal flows:

$$\text{Sewer} = \text{Driscopipe}$$

$$Q_S = Q_d$$

$$A_S V_S = A_d V_d$$

$$A_S \times \frac{.284}{\eta_S} \times R_h^{2/3} S^{1/2} = A_d \times \frac{.284}{\eta_d} \times R_h^{2/3} S^{1/2}$$

Since the slope is the same for the sewer and Driscopipe, the equation reduces to:

$$\frac{A_S R_h^{2/3}}{\eta_S} = \frac{A_d R_h^{2/3}}{\eta_d}$$

$$\frac{\pi D_S^2}{4\eta_S} \times \left(\frac{D_S}{4}\right)^{2/3} = \frac{\pi D_d^2}{4\eta_d} \times \left(\frac{D_d}{4}\right)^{2/3}$$

$$\frac{D_S^2 \times D_S^{2/3}}{\eta_S} = \frac{D_d \times D_d^{2/3}}{\eta_d} \text{ or } \frac{D_S^{8/3}}{\eta_S} = \frac{D_d^{8/3}}{\eta_d}$$

By Mathematical Reorganization:

$$D_d = \left(\frac{\eta_d}{\eta_S}\right)^{3/8} D_S$$

Where: η = .009 for Driscopipe
η = .015 for Concrete
η = .012 for Clay Tile

Proof: D_d = (.826)(D_S) for Concrete Sewers
D_d = (.898)(D_S) for Clay Tile Sewers

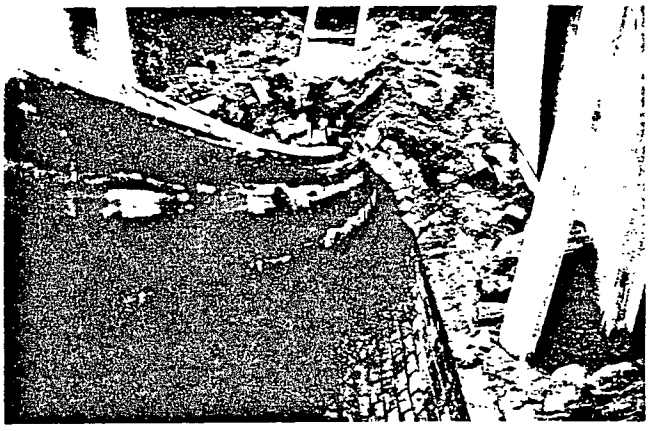

Chart 36

Special Fitting Nomenclature

Spool

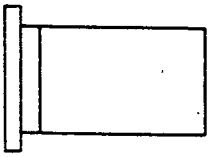

Molded Stub End with Pup

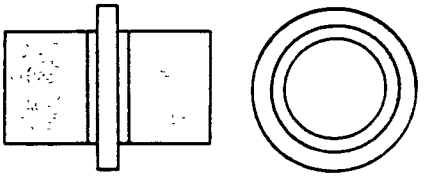

Water Stop or Flange Anchor

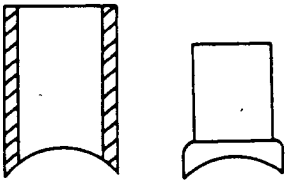

Branch Saddle for Side Wall Fused Outlet

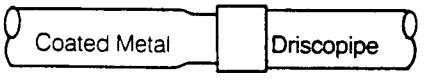

Transition Fitting

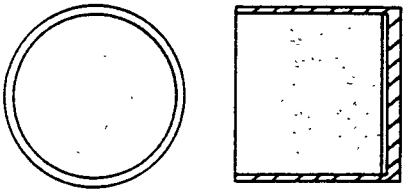

Low Pressure Large Diameter End Cap with Pup

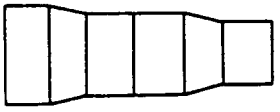

Concentric Reducers

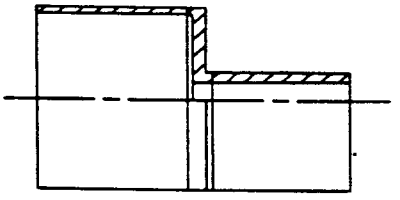

Low Pressure Eccentric Reducers (with or without Steel Flanges)

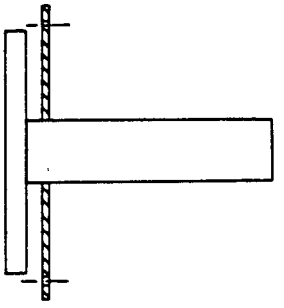

Concentric Low Pressure Reducer Flange

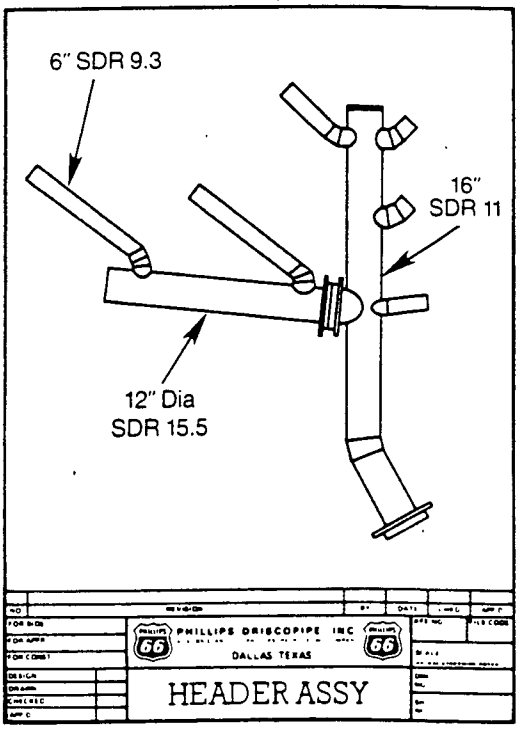

Custom elbows, fittings, headers, manifolds, manholes, etc . . . to your specification.

Warning: Precautions Necessary For Successful Installation of Fabricated Fittings

Driscopipe 8600 and Driscopipe 1000 fabricated tees, elbows and wyes are made by butt fusing or sidewall fusing together special cut segments of Driscopipe 8600 or Driscopipe 1000 pipe to obtain the desired fitting. The configuration of these fittings, and the fact that they are fabricated rather than molded, require that certain precautions be taken when installing them into a piping system.

There have been instances where fabricated fittings, after being fused to the pipe, have been damaged due to excessive strain imposed by improper handling. Driscopipe is generally very tough; however, the tensile strength of a polyethylene material is much less than steel and it will not support the excessive lifting and pulling forces that can be exerted by powered installation equipment.

For example, if, when installing a tee in the line, long lengths of pipe are fused to each of the three sides of the tee and it is then lifted up and out of the butt fusion unit without supporting the excess weight of the pipe, hanging and being lifted at the same time, the tee might be torn apart. If the assembly of the tee into the piping system is done in the manner described, then precautions must be taken to lift and support the pipe on all sides of the tee as it is removed from the fusion unit and lowered to the ground or into the ditch. Additional special precautions must be observed when fabricated fitting assemblies are to be floated into position for underwater installations The fabricated tee (or elbow or wye) must not be allowed to carry the weight of the pipe that is butt fused to it.

The installation procedures should provide the least possible amount of lifting and moving of the assembled pipe and fabricated fittings. If it becomes necessary to pull the assembly along beside the ditch to properly position it, the fabricated fitting, flange adapter or stub end should never be used as the point of attachment for the pulling line.

The fusion joining of a fabricated tee and wye into a system becomes complicated because of the third side It is not too difficult to keep strain off the fitting when fusing pipe to the running side of the tee and lifting and lowering this much of the assembly into position. It is when sufficient pipe is added to the third (branch) side to permit the laying of pipe in this direction that the assembly becomes very difficult to handle Final handling and positioning of these assemblies require extra handling equipment and additional precautions to prevent damage to the fabricated fitting

Manufacturer's Recommended Alternate Method The need for extra equipment and much of the possibility of damage can be eliminated by altering the method of installing the fabricated tee and wye to include the use of a flanged connection on the branch side This will allow final positioning to take place before the branch side is connected There will be some instances where it will prove very advantageous from an installation viewpoint to use flanged connections on two sides of a tee or wye and also on one side of the elbow. This allows the pipe to be laid from either direction, pushed or pulled into tight locations, floated into position, lowered into the ditch and generally handled much easier and faster . before the final connection is made at the tee, wye or elbow From the standpoint of economy, speed and ease of installation, and to eliminate the occurrence of excessive installation stresses on fabricated fittings, it is strongly recommended that flanged connections *always* be used on the branch side of tees and wyes and on one end of elbows, especially in sizes above 24"

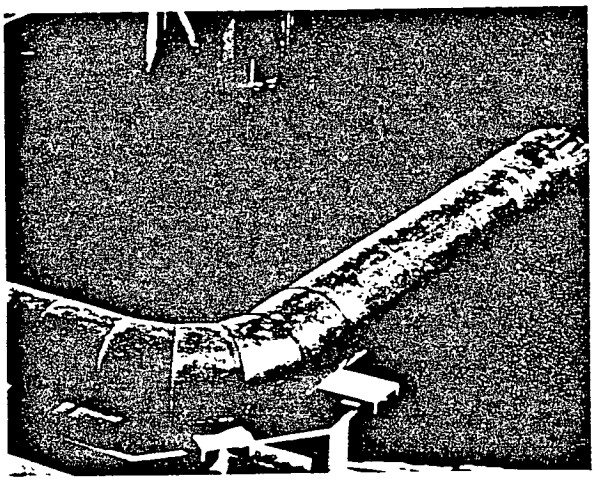

Manhole Connections

Through Manhole
Remove top or drill holes to keep manhole dry.

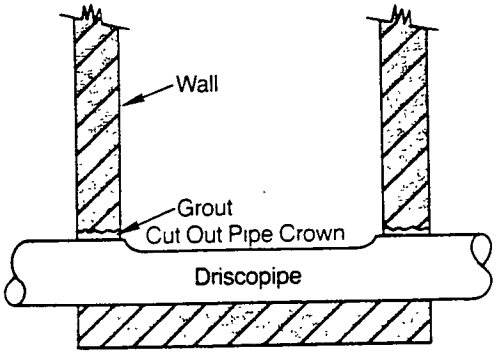

Change of Direction
Good pullout resistance

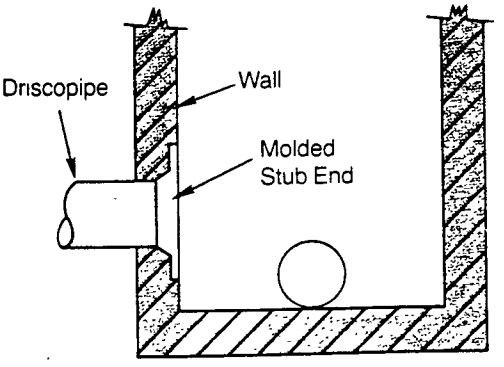

"Lined" Manhole
Good pullout resistance

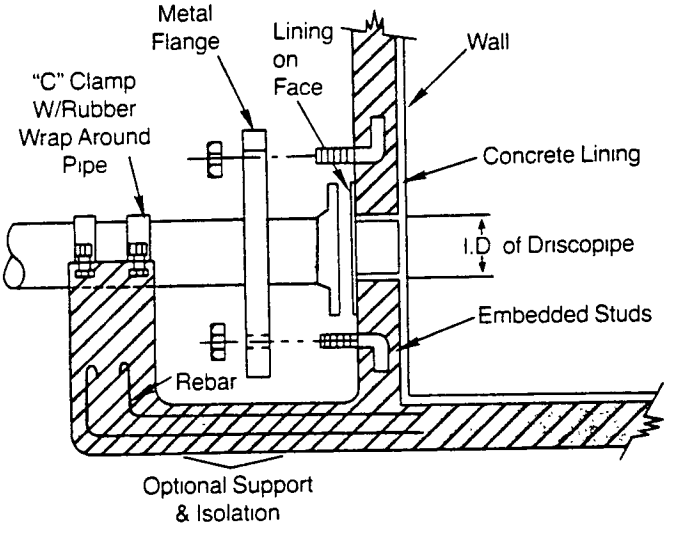

Grouted in Wall
Fair pullout resistance

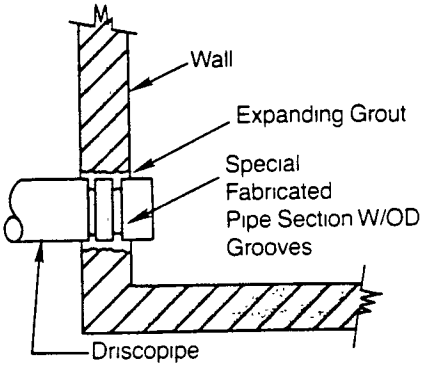

Gas/Water Tight
Good pullout resistance

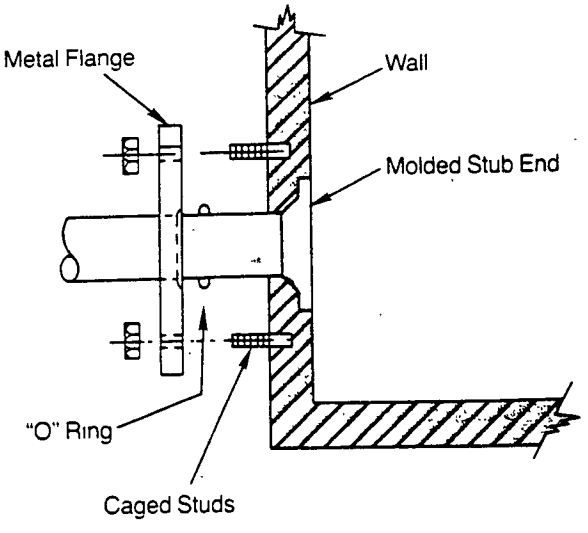

Spool Connection
Good pullout resistance

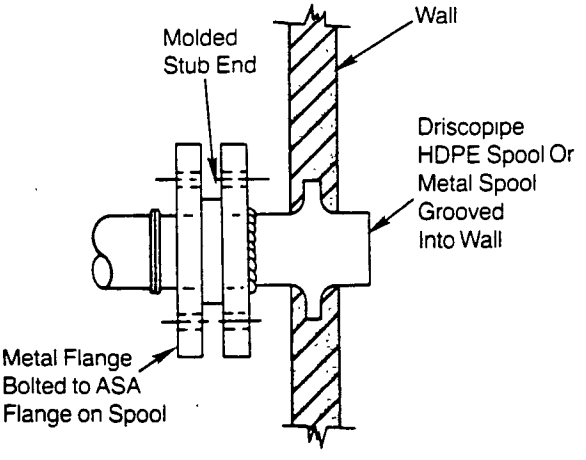

FLUID CONTROLS INCORPORATED

WORLD LEADERS IN PLASTIC PIPING & FABRICATION

Fluid-Lok™ DESIGN MANUAL

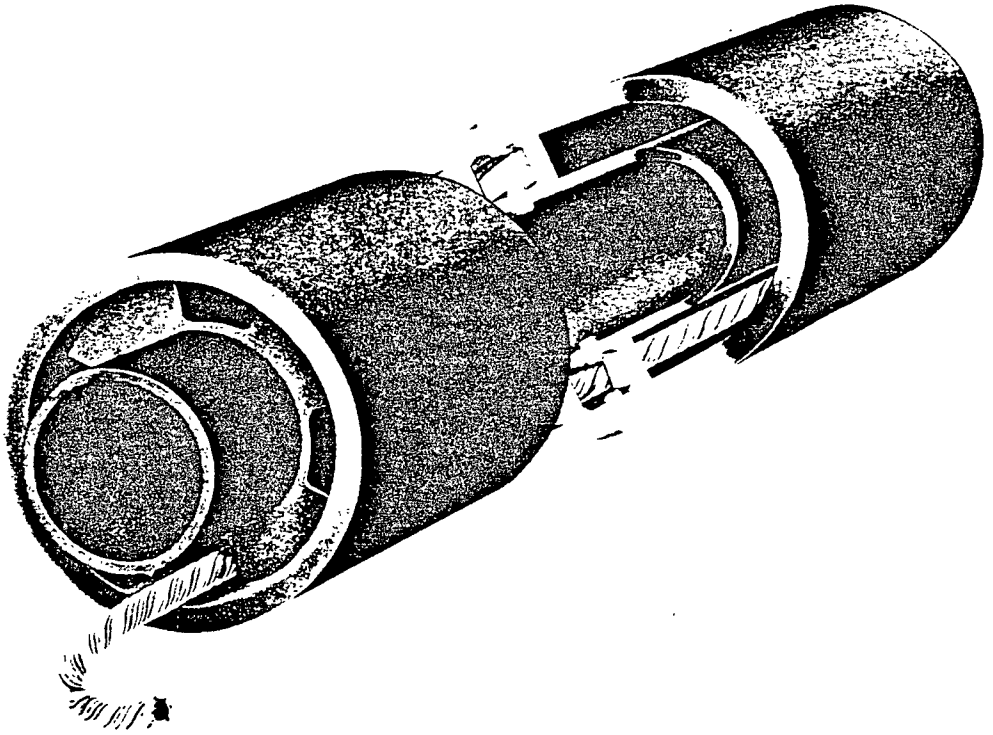

3435 Stanwood Blvd., NE • Huntsville, AL 35811 • (205) 851-6000 • Toll Free 1-800-462-0860

Table of Contents

The Fluid-Lok™ Piping System Design Guide

Why Dual-Containment? 1
What is Dual-Containment? 2
Leak Detection 2
The Fluid-Lok™ Design 2
High-Density Polyethylene 3
Fluid-Lok Fittings 3
Cost Reduction by Prefabrication 3
Fluid-Lok™ Installation 3

Considerations for Thermoplastic Dual-Contained Piping Systems

Piping Materials 4
System Requirements 4
Simultaneous Fusion Welding 7
Fluid-Lok™ Pipe Sizes 7
Centralizers 9
Centralizer Spacing 9
Thermal Considerations 9
Designing for Thermal Considerations 9
Lateral Deflection Calculations in Above-Ground Applications 10
Thermal Conductivity 12
Support Spacing for Above-Ground Rack Piping 12
Underground Installation 13
Leak Detection Piping Requirements 13
Leak Detection Access Requirements 14
Leak Detection Components and Access Details 15

Fluid-Lok™ System Installation Overview

Pull-cable Installation 17
Testing 17
Leak Detection Cable 17
Drying and Purging the Annular Space 18
Leak Detection Map 18

Fluid-Lok™ Specification for Dual-Containment HDPE Pipe & Leak Detection

1. General: 19
2. Scope of Work 20
3. Materials 20
4. Dual Containment Piping 20
5. Leak Detection System Requirements 21
6. Execution 22
7. Submittals 23

Fluid-L k™ is a regist red trademark of Fluid Controls, Incorp rated. TraceTek™ is a registered trademark of Raychem C rporation. Other trademarks are the property of their r spective owners.

Fluid-Lok™ Specification Guidelin s For L ak Det ction And Location Systems

1. General 24
2. Products 24
3. Execution 24
4. Submittals 25

Fluid-Lok™ HDPE Dual Containment Piping Systems Comprehensive Testing Guidelines

1. Introduction 26
2. General Considerations 26
3. Testing Procedure Guidelines 28
4. Cautionary Notes for Pressure Testing 29

The Fluid-Lok™ Piping System Design Guide

Based on sound design and engineering, the Fluid-Lok™ dual-containment piping system by Fluid Controls Inc. sets the standard for environmental protection and safety in a wide variety of applications. Highest quality materials and proven design concepts ensure control, containment, and accurate leak detection of hazardous fluids.

A Fluid-Lok™ system of high density polyethylene or other thermoplastic pipe meets the most stringent standards for piping hazardous fluids. It addresses environmental liability and meets all state and federal regulations with cost effective installation and operation.

Fluid-Lok™ dual-containment systems are the standard for many applications such as:

- Chemical plants
- Paper mills
- Refineries
- Electronic manufacturers
- Nuclear laboratories
- Power plants
- Petrochemical plants
- Mining and mineral operations
- Remediation
- Landfills (leachate collection)

All Fluid-Lok™ designs meet current design and regulatory requirements.

Why Dual-Containment?

We live in a society of ever increasing responsibility. With the general public becoming more and more environmentally conscious, it becomes the duty of industry to take the lead in implementing procedures for environmental safety.

The added insurance provided by dual-containment piping far outweighs the potential problems an owner would experience, if a dual-containment system was not used in sensitive applications.

Environmental contamination affects our world in so many ways. Harm to fish, wildlife and mankind becomes a major concern. In a recent survey of industry conducted by Raychem, liability was the number one reason for designing a dual-containment system.

Government regulations should be seriously considered when making a choice for a dual-containment system. Current state and/or federal regulations may affect your application. While designing any system, careful consideration should be given to future regulations that might affect your current design.

Figure 1 -- Release response and corrective action

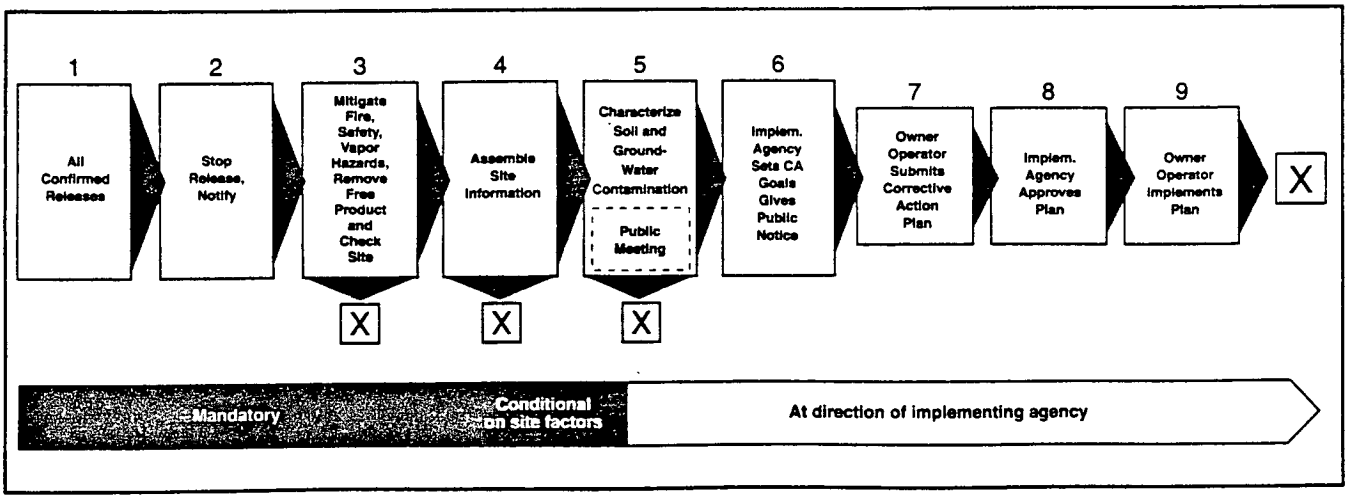

If a dual contained system is not designed and installed, and a leak into the environment occurs, who becomes responsible? The courts have determined that the owner is.

Liability and clean-up costs could become staggering. Would the reputation of the owner be diminished from the potential publicity received?

The engineer, designing the system, needs to carefully consider the answers to these questions. The owner should also answer these questions considering the potential costs of fines and clean-up, if a dual contained system is not installed.

What is Dual-Containment?

Dual-containment is defined by many as a means of secondary containment for a tank, structure or pipe such that a leak from the inner or primary "carrier pipe" is prevented from entering the environment. Leak detection is often considered an option, even when not demanded by regulations.

The "secondary containment" approach is often incorrect and leading to systems that are "contained," but seldom functional. Often they do not even meet regulatory requirements, and in some cases, give a false sense of security. (**Figure 2.**) There are many potential causes of piping leaks. The federal Environmental Protection Agency (EPA) lists the four major causes of piping failure as:

Corrosion
Poor workmanship and installation
Accidents
Natural events

Many of these damages affect both pipes. "Secondary containment," even with point detection, does not prevent or minimize the potential environmental and financial impact.

True, "secondary containment" arose from the need for leak detection of the carrier pipe to prevent catastrophic releases. Regulatory pressure for dual-containment systems began as a need to confirm, stop and mitigate the immediate hazard and prevent major environmental contamination from a leak. (**Figure 1**).

Leak Detection

Leak detection, not secondary containment, is the critical factor that allows confirmation of and quick response to a leak. Leak detection can also minimize the impact of a release event and the corresponding clean-up costs. Secondary containment then becomes a means of also minimizing a leak's impact.

More importantly, however, is the "controlled annular" space around the carrier pipe. This space gives a controlled environment to monitor, decreasing the possibility of false alarms, while enabling extremely sensitive detection for rapid leak response.

The Fluid-Lok™ Design

A one-piece Force Transfer Coupling® (FTC), developed and patented by FCI engineers and technicians, "manages" the thermal expansion differential of the inner carrier pipe and the outer containment pipe in a dual-contained piping system. The FTC is an anchor for the inner and outer pipe and can be mounted on a pipe rack or act as a water stop when cast in concrete.

Centralizers in the annular space between the inner and outer pipes control the deflection of the inner pipe, provide the required pipe support, and ensure stability in each pipe section.

The stability and support necessary for proper butt fusion welding is provided by centralizers. Ports in the centralizers allow for ventilation and drying of the annular space and passage of leak detection cables.

Figure 2 -- Dual-containment without leak detection gives a false sense of security.

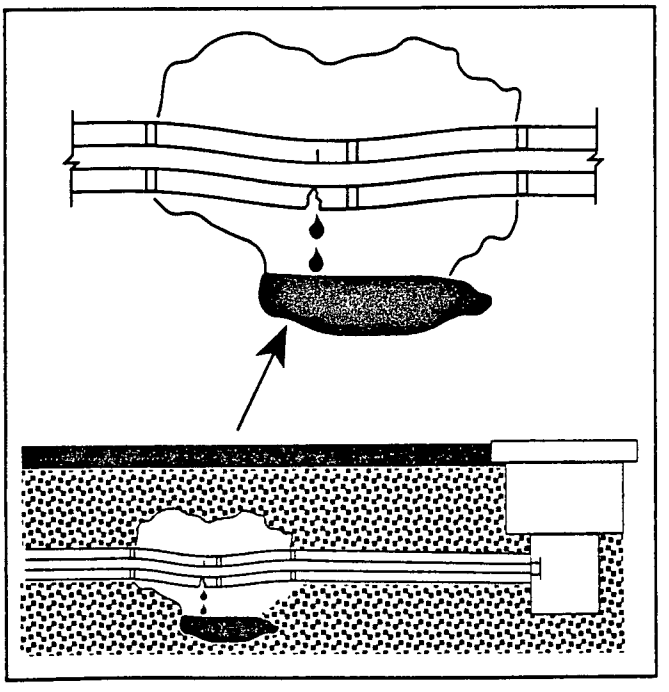

Because the relative movements of the inner and outer pipe are controlled by the FTC's, troublesome expansion seals, field wraps, and questionable processes are eliminated. All joints are welded with simultaneous butt fusion using only proven thermoplastic fusion and engineering techniques.

Pressure testing up to 1.5 times the design operating pressure of the inner carrier pipe ensures reliability. Simultaneous welding of both pipes reduces installation time and cost.

High-Density Polyethylene

High-density polyethylene (HDPE) pipe is the material of choice for Fluid-Lok™ piping for all but the most aggressive fluids. HDPE will not rust, rot, pit or corrode over the typical 50-year design life of a well-designed HDPE system.

Dual-containment piping systems are dynamic. Piping, fittings, and other components must function together. Highly ductile polyethylene absorbs the stress of installation, handling, impact and other abuse. It will not corrode like copper and steel. Butt fusion welding of HDPE overcomes the glue problems associated with PVC and fiberglass.

Other materials can be used for the carrier pipe with HDPE as a less expensive container. Polypropylene (PP) has approximately the same chemical resistance and a slightly higher service temperature. Polyvinylidene fluoride (PVDF), a relative of Teflon, can be combined with an outer pipe of HDPE, when more aggressive materials must be transported.

Fluid-Lok™ Fittings

The stability and versatility provided by the basic Force Transfer Coupling family of fittings eliminates most of the traditional dual-containment problems with floor drains, terminations, pipe-size reductions, water stops, and end closures.

The Fluid-Lok™ system ensures success with a complete line of fittings and appurtenances such as:

- termination fittings
- ells
- tees
- wyes
- clean-outs
- sumps
- manholes
- floor drains
- tanks
- other components

All are available from FCI as part of the Fluid-Lok™ system. For especially difficult applications, FCI technicians can custom design and machine unique HDPE fittings and spools.

Cost Reduction by Prefabrication

Prefabrication of complex piping projects in the FCI shop will enhance quality, reduce the installation cost and minimize on-site construction disruption. Installation time can be cut from months to weeks. Overall project cost can be reduced significantly.

Laboratory acid-waste and other DWV application pipelines are good examples of systems that can be pre-fabricated for substantially less cost than field construction. Sections of pipe, joints, and fittings up to 40 feet in length can be assembled and shipped as one component.

Fluid-Lok™ Installation

Fluid-Lok™'s construction-oriented systems can be installed much like and almost as quickly as similar lengths of HDPE single-wall pipe.

FCI has the equipment and expertise and will provide hands-on installation assistance to plant personnel or contractors. Technicians can train piping crews in the installation of dual-containment pipe. As required, field technicians will perform testing and other quality assurance duties on-site.

FCI offers a complete line of installation equipment for the Fluid-Lok™ system.

Considerations for Thermoplastic Dual-Contained Piping Systems

The design of a dual-contained piping system is more complex than a single-pipe design because an inner and outer pipe must work together to accommodate every fitting, bend, anchor, and termination in various and sometimes different environments. Leak detection equipment (required in many systems to meet federal and state environmental regulations) imposes additional design considerations beyond those for single-wall piping in thermoplastic, metal or other materials. Considerations include:

Material
Chemical environment
Operating temperature
Pipe size and operating pressure
Structural support and burial loads
Leak detection
Tie-ins to other equipment and systems

Fluid Controls' patented technology allows the integration of pre-assembled combinations of dual-contained pipe lengths, ells, tees, wyes, clean-outs, Force Transfer Couplings®, access ports, floor drains, low point drains, and custom fittings into a single dynamic system. Patented Force Transfer Couplings are used to anchor the system and seal the annular space between the carrier and containment pipes.

The Fluid-Lok™ system will safely handle a wide range of organic and inorganic chemicals and waste products in gravity flow and pressure systems. Tough, ductile, and leak-free high-density polyethylene (HDPE) pipe is the material of choice in all but the most aggressive environments. Simultaneous fusion welding of the inner carrier pipe and the outer containment pipe simplifies installation and provides high reliability. Fluid Controls' technicians can specify a leak detection system that will comply with environmental regulations and the toughest design criteria.

Figure 3, an abbreviated Fluid-Lok™ piping system, illustrates its flexibility and broad capabilities. The leak detection component lay-out in **Figure 4** shows the versatility and adaptability of a properly designed system.

Piping Materials

In addition to HDPE, Fluid Controls offers polypropylene and polyvinylidene fluoride (PVDF) thermoplastic pipe and fittings. Chemical and environmental capabilities determine the carrier pipe material. HDPE has a wide range of chemical and temperature resistance and is the material of choice for most applications. PVDF has excellent chemical and temperature resistance and is suitable for acids, salt solutions and aggressive hydrocarbons. Polypropylene is similar to HDPE, but will maintain integrity at higher operating temperatures.

High-density polyethylene pipe works well in pressure and gravity installations. Because of chemical resistance and system integrity (with butt-fusion welding), dual-contained HDPE pipe is the standard for critical pump-and-treat remediation applications. Pressure ratings of 200 psi (available to 265 psi in some sizes) are available for above and underground applications. HDPE manholes, sumps and valve boxes can be installed as an integral part of the containment.

System Requirements

Dual-contained thermoplastic piping systems require components that are not used in conventional piping systems. Some of the component and design considerations required are:

-- End termination fittings to seal the annular space between the carrier and containment pipes
-- Containment pipe access ports for installing and servicing leak detection equipment

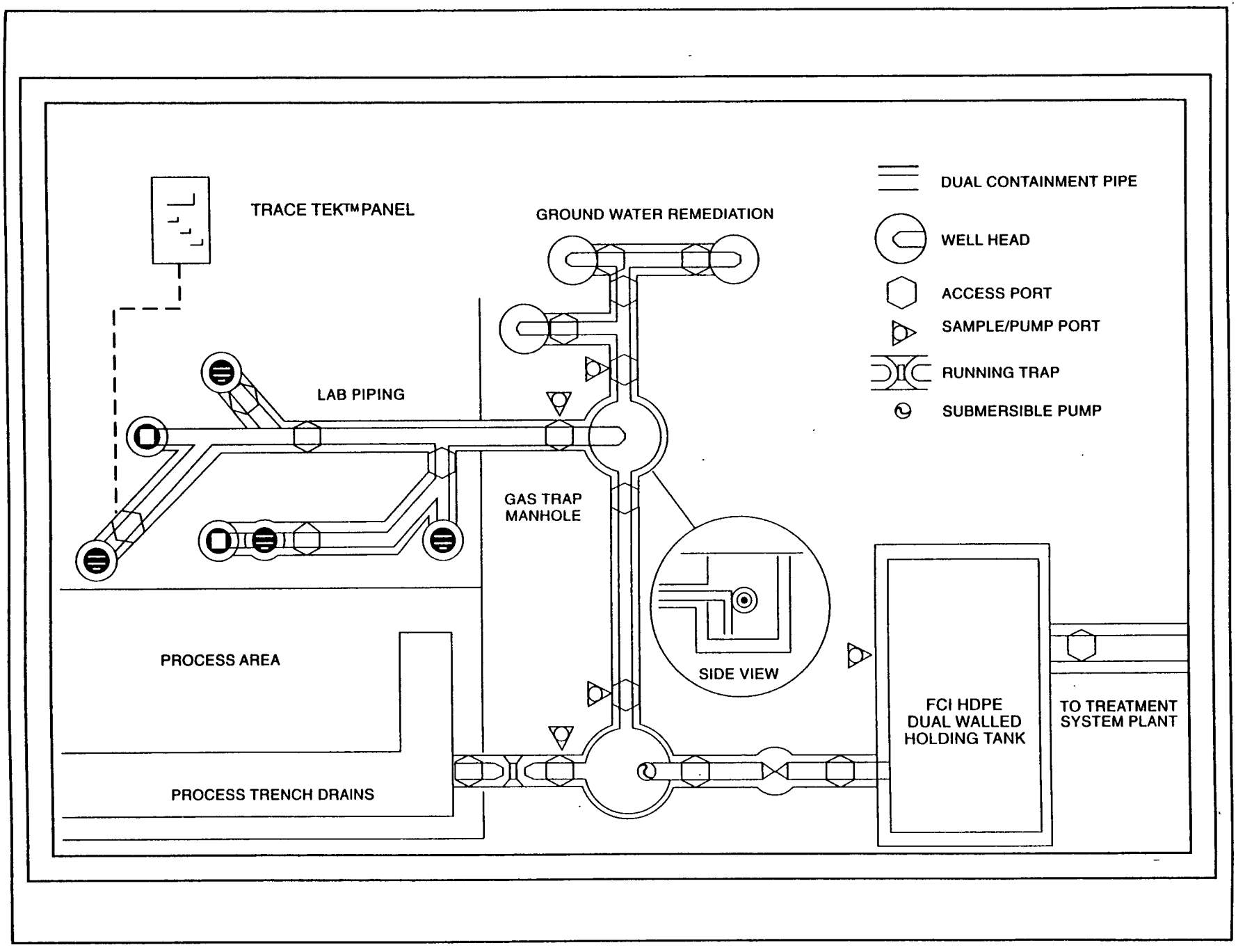

Figur 3 -- An abbreviated Fluid-L k™ dual-c ntained piping system with component symb ls.

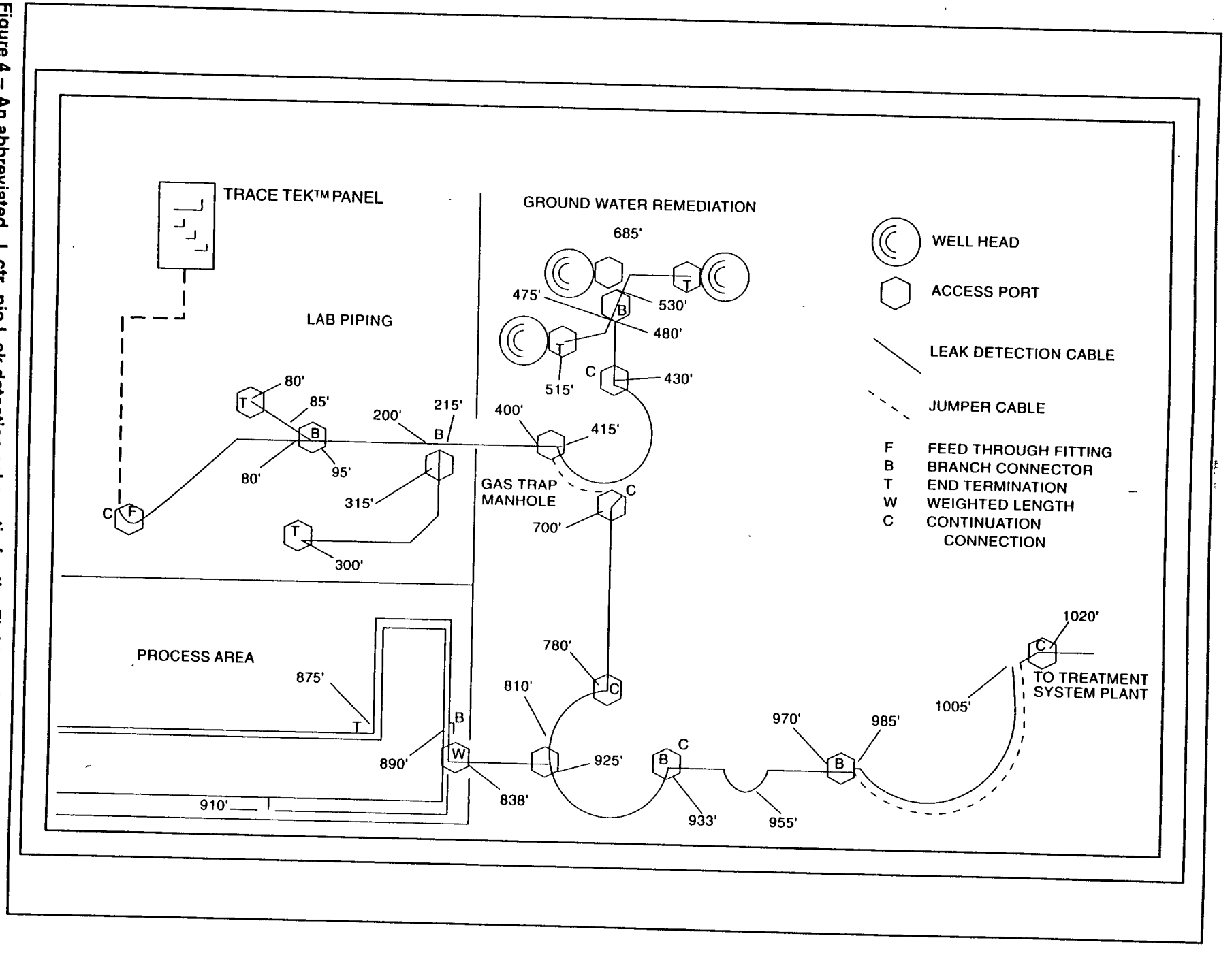

Figure 4 -- An abbreviated l ctr nic l ak detection schematic f r th Fluid-Lok™ system in Figure 3.

-- Containment pipe low-point drains for removal of water after installation and in case of a leak

-- Carrier pipe clean-out access

-- Anchors at critical intervals to manage thermal change in the pipes

In lab and waste drain systems, sections of pipe with several branches, access ports, and other fittings can be prefabricated in the Fluid Controls plant and shipped by truck. This reduces time consuming field welds and lowers installation cost. Shop fabrication quality is superior when compared to field fabrication.

In dual-contained DWV installations, a floor drain-variation of the Force Transfer Coupling® seals the annular space between pipes and anchors the pipe end. Running traps, p-traps, and gas trap dual-contained manholes are available for these systems.

For tank tie-ins, especially to existing tanks, Fluid Controls has many specialized fittings and will custom design as necessary for difficult connections. Penetrations and tie-ins to concrete structures are accomplished quickly and with virtually a zero leak rate using the patented Force Transfer Coupling family of fittings.

Simultaneous Fusion Welding

In the Fluid-Lok™ system, sections of HDPE carrier and containment pipes are joined with simultaneous butt fusion welding. This technique provides excellent weld integrity and fast installation. **Figure 5** shows Fluid Controls' dual-containment piping prepared for joining. The carrier pipe extends beyond the containment to allow for visual alignment in the carriage of a butt fusion jig. After alignment of the carrier pipes ends, a facer is placed between them. The facer shaves the carriers until they are flush with the containment pipes. The heater, placed between the butts of the two sections of pipe, melts both the inner and outer pipes of both sections. After a satisfactory molten bead is rolled back, the heater is removed and the two pipe sections are pushed together and cooled under pressure.

Systems using HDPE for the containment pipe and PVDF or polypropylene for the carrier pipe are joined with staggered butt fusion. Separate welding procedures join the carrier pipe with a standard butt fusion heater and the containment pipe with a split heater.

Fluid-Lok™ Pipe Sizes

Fluid-Lok™ dual-containment pipe and components are available in carrier pipe sizes from 1 inch to 48 inches and containment pipe sizes up to 54 inches. Larger sizes are available on special order. Virtually any combination of pipe sizes and wall thickness is available, pre-assembled and ready for installation. **Table 1** lists typical carrier-containment pipe combinations.

A common question is "Why do you put a 4-inch carrier pipe into an 8-inch containment pipe?" Why not put a 4-inch carrier in a 6-inch containment pipe?

Reasons for the combinations specified in Table No. 1 include:

1) **Fittings.** Not all fittings can be contained in the next pipe size.

2) **Leak detection equipment.** The leak detection cable requires at least a 3/4-inch continuous clearance. Cable connectors, cable installation equipment, and butt fusion beads add to the space required for installation and maintenance.

3) **Thermal expansion and deflection.** If the carrier pipe expands in length and is anchored with a Force Transfer Coupling®, the annular space in the

Figure 5 -- Sections of Fluid Controls dual-contained Fluid-Lok™ system pipe ready for butt fusion welding.

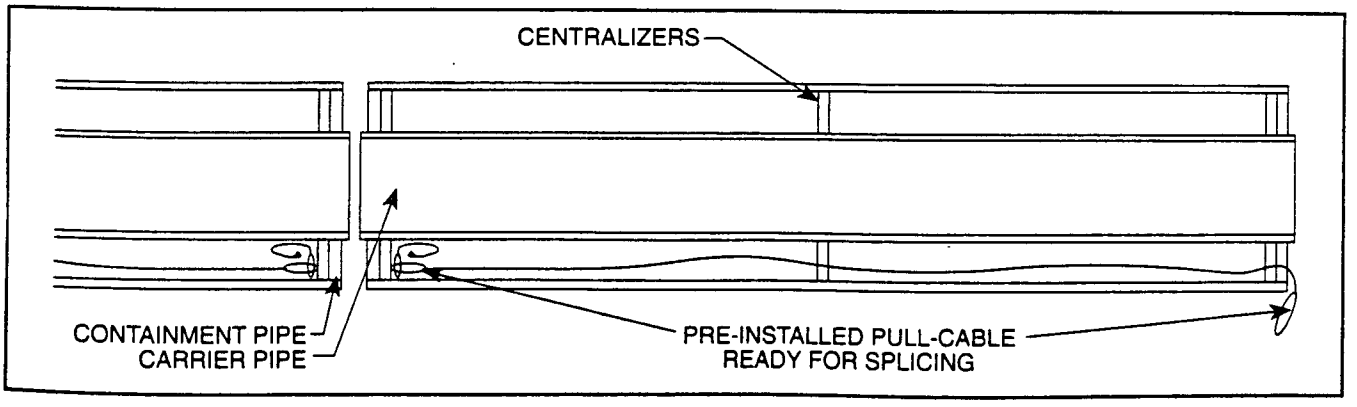

Tabl 1-- Common Size Combinations of Dual-Contain d Piping[1]

Nom. IPS carrier x container pipes	Carrier Pipe I.D.	Carrier Pipe PSI	Carrier Pipe Centralizer Spacing - Max. Inches @ 73°	Containment Pipe O.D.	Containment Pipe PSI	Containment Pipe Rack Support Spacing - Max. Inches @ 73°	90° Bend Radius (Inches)	Leak[3] Detection Cable Available	Carrier[4] Materials Options
1 x 3	1.075	160	35	3.500	160	55	105	NO[2]	HDPE, PP, PVDF
1 x 4	1.075	160	35	4.500	100	56	135	YES	HDPE, PP, PVDF
2 x 4	1.943	160	45	4.500	100	56	135	NO[2]	HDPE, PP, PVDF
2 x 6	1.943	160	45	6.625	100	68	200	YES	HDPE, PP, PVDF
3 x 6	2.864	160	55	6.625 6.625	100 64	68 62	200 230	YES	HDPE, PP, PVDF
4 x 8	3.682 3.970	160 100	60 56	8.625 8.625	100 64	78 74	260 300	YES	HDPE, PP, PVDF
6 x 10	5.421 5.845 6.115	160 100 64	70 68 62	10.75 10.75	100 64	85 82	325 380	YES	HDPE, PP, PVDF
8 x 12	7.611 7.961	100 64	78 74	12.75 12.75	64 51	85 62	450 510	YES	HDPE, PP, PVDF
10 x 14	9.486 9.924	100 64	85 82	14.00 14.00	64 51	95 68	490 560	NO[2]	HDPE
10 x 16	9.486 9.924	100 64	85 82	16.00 16.00	64 51	98 72	560 640	YES	HDPE
12 x 16	11.25 11.770	100 64	92 90	16.00 16.00	64 51	98 72	560 640	YES	HDPE
16 x 20	14.118 14.770	100 64	105 98	20.00 20.00	64 51	108 82	700 800	NO[2]	HDPE
16 x 22	14.118 14.770	100 64	105 98	22.00 22.00	64 51	112 88	770 880	YES	HDPE
18 x 22	15.882 16.616	100 64	108 100	22.00 22.00	64 51	112 88	770 880	NO[2]	HDPE
18 x 24	15.882 16.616	100 64	108 100	24.00 24.00	64 51	115 92	840	YES	HDPE

-- Pressure ranges from gravity flow to more than 200 psi
-- Carrier pipe sizes from .05 inch to 48 inches O.D.
-- Containment pipe sizes from 3 inches to 54 inches O.D.

1. Other sizes available with longer than standard lead time.
2. Insufficient annular space for easy installation and removal of leak detection cable.
3. All system sizes are available with point sensor leak detection.
4. HDPE is high density polyethylene; PP is polypropylene; PVDF is Polyvinylidene Fluoride.

container pipe must be sufficient for the carrier pipe to deflect laterally.

Centralizers

In dual-containment piping systems, centralizers support the carrier pipe and manage its deflection within sections of the containment pipe. They align the carrier and containment pipes, relative to each other, during welding. Ports in the centralizers make the annular space between the carrier pipe and containment pipe continuous to accommodate leak detection cables. And, if the annular space must be dried, the ports allow air to flow through the length of the pipe.

Centralizer Spacing

Centralizer spacing is important to the long term operation of a dual-containment piping system. Centralizers are the carrier pipe's support system in the pipe rack created by the containment pipe. They must be welded to the carrier pipe to ensure and maintain correct spacing and support.

Centralizers support the inner carrier pipe and control pipe expansion and contraction in relatively short and controlled spans within each section along the pipe line.

Thermal Considerations

Thermal expansion and contraction of thermoplastic pipe can be up to ten times that of other materials, such as steel. The carrier pipe will take on the temperature of the liquid it contains. In most underground pipe lines, soil resistance and relatively stable temperatures limit expansion of the containment pipe.

Temperatures of chemical plant process sewers, can reach more than 100 degrees. The ground temperature will usually be around 60 to 70 degrees, depending upon the burial depth and the geographic latitude of the plant. In this example, the carrier pipe will grow in length and the containment pipe will shrink or remain the same. Force Transfer Couplings® on the end of each section of the pipe run connect the carrier and containment pipes and limit the cumulative effect of differential expansion by transferring forces in small increments out of the pipes and into the anchors.

Centralizers around the carrier pipe limit the force of expansion on the anchors by directing lateral deflection of the carrier pipe at predetermined intervals between the centralizers. Force Transfer Couplings® tie the carrier pipe to the containment pipe and provide an anchor point.

In above-ground installations, temperature changes can be more extreme. The containment pipe will expand as the temperature increases and will shorten as the temperature decreases. In many areas, the ambient temperature can change over 100 degrees F from highs in summer to lows in winter. The temperature of the carrier pipe can also vary independent of these changes.

Designing for Thermal Considerations

Because the inner and outer piping system must work together, temperature differentials are a greater consideration in the design of dual-containment piping than in a traditional single containment installations.

First, determine where you expect thermal change to occur. In a buried process sewer, the carrier pipe temperature and length will change more than the containment pipe. In the above ground system, the containment pipe will usually see more thermal change than the carrier.

Second, estimate the amount of temperature change anticipated. **Table 1** provides specifications for centralizer spacing based on temperature range.

Third, look at the system. Is the bulk of the job straight runs of pipe? If many fittings and great changes in temperature are anticipated (as in lab piping systems), the use of Force Transfer Couplings® will prevent damage to components by one pipe shifting in relation to the other.

Long runs of pipe that change direction must be anchored with Force Transfer Couplings®. Use rebar in the concrete to provide the strength to handle the forces transferred from the pipe to the concrete structure as in Figure 6. Use this type of connection when the pipe penetrates a wall or enters a cast-in-place manhole. In Figure **7**, the coupling prevents the forces of expansion and contraction from damaging the carrier pipe, fittings, or pipeline valves. Left uncontrolled, these forces will damage fittings or reduce flow.

Formula 1 – Change in the length of a pipe due to temperature change.

$$\Delta L = \Delta T(\alpha L)$$

Where:
L = Length of pipe (Inches)
ΔL = Change in pipe length (Inches)
α = Coefficient of thermal expansion (in/in/°F)
ΔT = Temperature change(°F)

α for HDPE is 1.2×10^{-4}
α for PP is 8.3×10^{-5}
α for PVDF is 6.7×10^{-5}

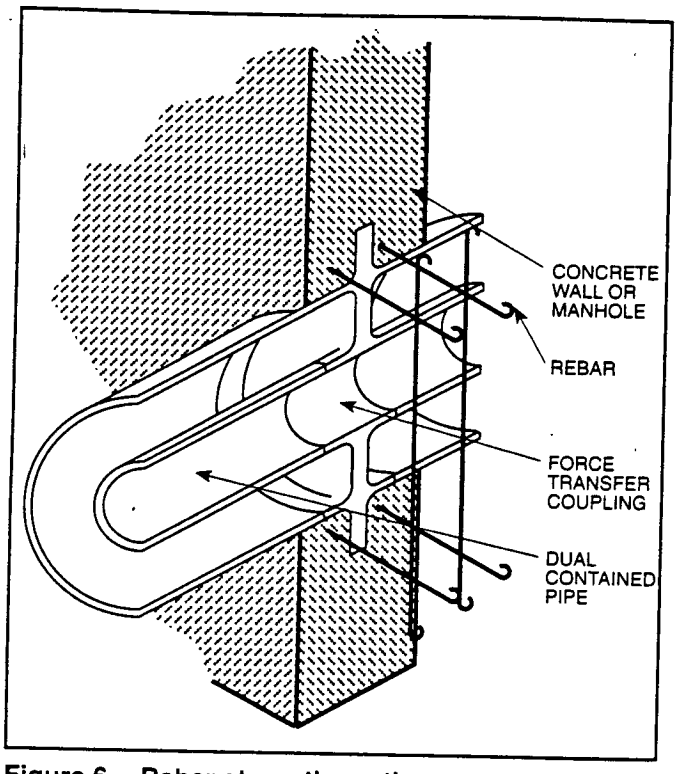

Figure 6 -- Rebar strengthens the concrete and anchors the patented Force Transfer Coupling®.

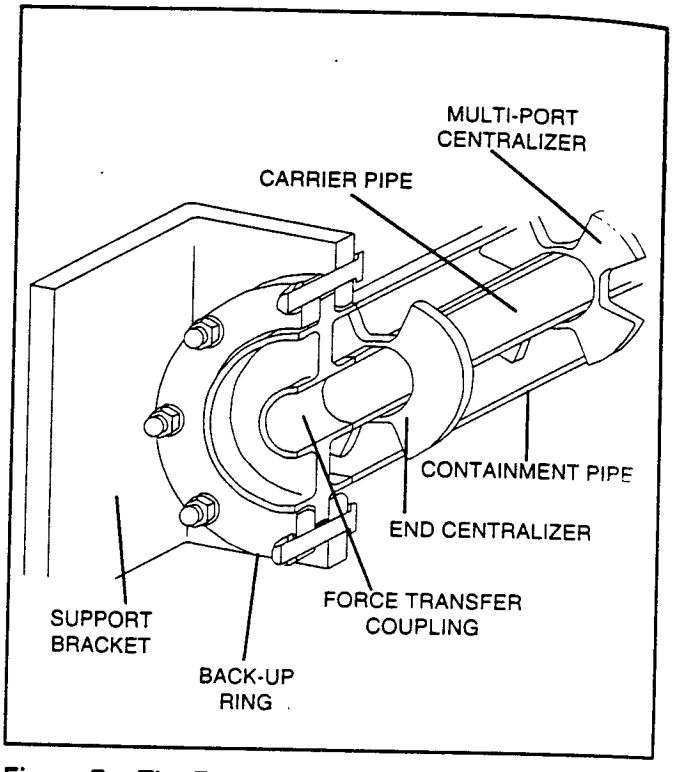

Figure 7 -- The Force Transfer Coupling® is used as an anchor in an above-ground application.

In manhole connections, Force Transfer Couplings® connect the carrier pipe and containment pipe at the manhole wall. The "lip or flange" on the force restraint coupling holds the thermoplastic pipe and transfers the force from the pipe to a concrete structure or a metal bracket.

Calculate the change in length of a pipe caused by temperature changes with **Formula 1**. For above ground installations, use Force Transfer Coupling® expansion loops, off-sets, and ells to handle expansion and provide flexibility as in Figure 7. The graphic with **Formula 2** shows typical expansion and contraction using 90 degree ells to provide flexibility to the system. Section L will increase in length and cause section "A" to flex.

The length of the flexible Section "A" to compensate for the length changes "L" can be calculated with **Formula 1**.

Lateral Deflection Calculations in Above-Ground Applications

In long straight pipeline sections of conventional metal pipe, expansion loops manage change in length caused by expansion and contraction in above-ground systems. In the Fluid-Lok™ dual-contained system using HDPE, strong forces of expansion and contrac-

Formula 2 -- Calculating the required length of a flexible section to compensate for thermal expansion and contraction using 90-degree ells.

$$a = K\sqrt{\Delta L \cdot D}$$

Where:

a = Length of flexible section
K = Constant of expansion (for HDPE, K = 21)
ΔL = Change in length of pipe L
D = OD of pipe
L = Length of pipe run (expanding section)
F = Fixed point

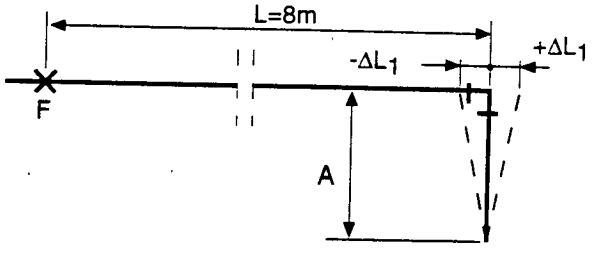

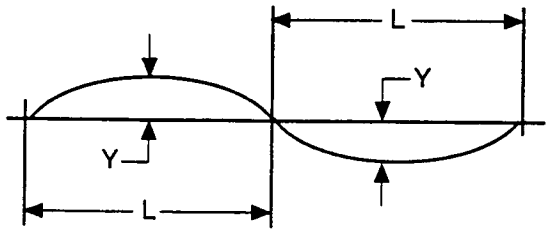

$$\Delta Y = L\sqrt{.50\alpha\Delta T}$$

$$L = \frac{\Delta Y}{\sqrt{.50\alpha\Delta T}}$$

Where:
ΔY = Lateral Deflection (Inches)
L = Length of Pipe between anchors (Inches)
α = Coefficient of thermal expansion (in/in/°F)
ΔT = Temperature change (°F)
(Formula 1 used to determine the amount of deflection between supports with a change in temperature. Formula 2 gives pipe length increase for known amounts of lateral deflection.)

Formula 3 – Calculating the lateral deflection of a restrained HDPE pipe

Figure 8 – Differential expansion of dual-contained pipe in above-ground applications

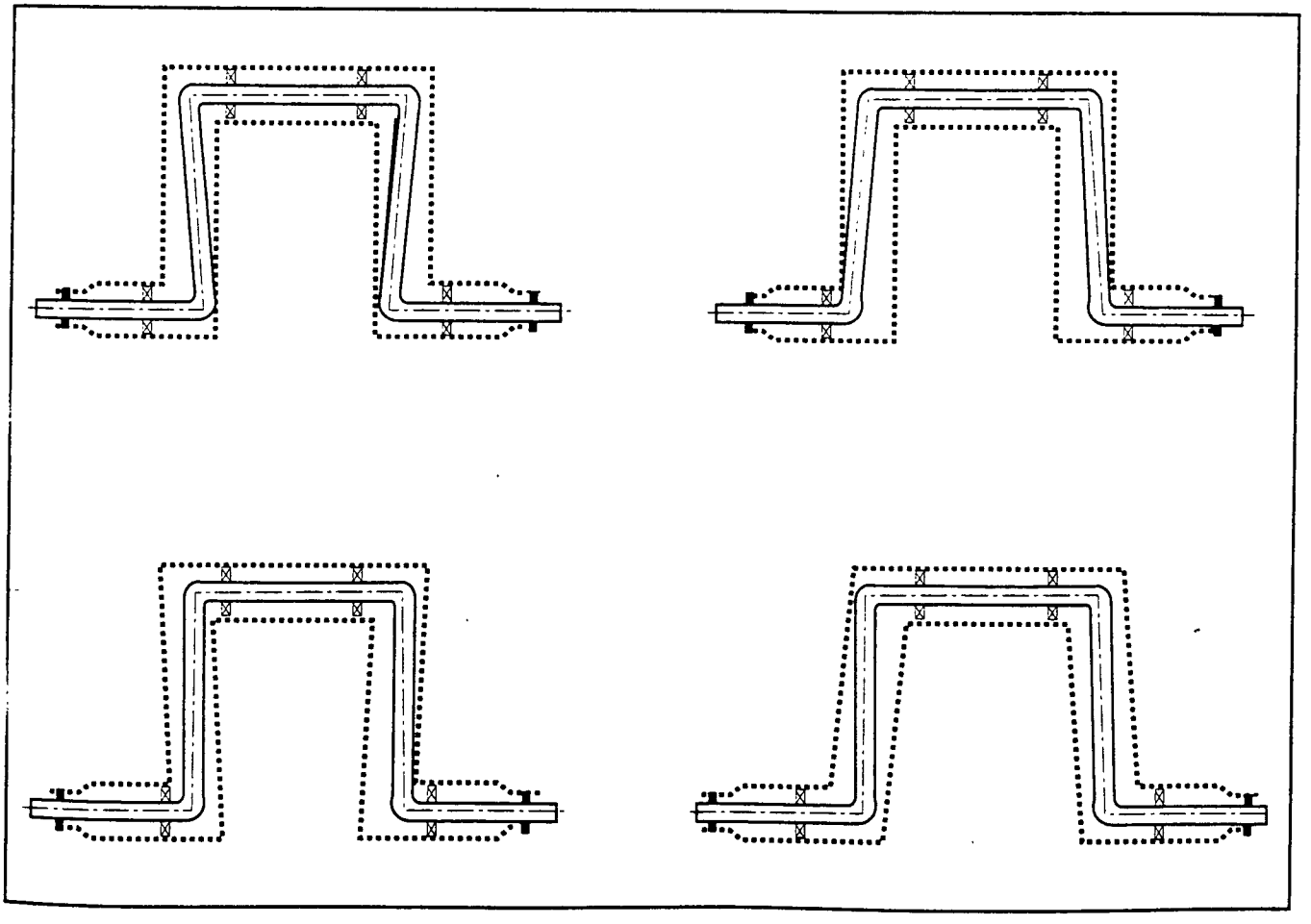

tion are managed with Force Transfer Coupling® in conjunction with expansion loops, offsets and ells.

When a restrained pipe expands, it deflects laterally. Lateral deflection can be calculated with **Formula 3**. (The formula is courtesy of Phillips Driscopipe, Inc.)

Thermal Conductivity

Because HDPE is a good insulating material, there is little heat gain or loss in dual-containment piping systems. Seldom is heat tracing required in sections of exposed pipe with continuous flow. Insulation can be added to further reduce heat loss and prevent heat gain from sunlight or ambient temperatures.

Support Spacing for Above-Ground Rack Piping

Supported pipelines should be designed to minimize mid-span deflection to 1/4 inch or less.

Table 2 charts the support spacing required for a supported pipeline made of HDPE. Spacing for SDR 32.5, SDR 26, SDR 17, and SDR 11 pipe is based on weight with the pipe filled with water. Information on spacing is provided by Phillips Driscopipe, Inc.

The containment pipe and the centralizers support the carrier pipe. Spacing must be adjusted if the temperature increases or if the specific gravity of liquid being conveyed is greater than one.

If the pipe contracts, the supports and anchors must be strong enough to handle the forces of contraction. Controlling the movement of the carrier pipe by spacing the centralizer to deflect at controlled intervals

Table 2 -- Support Spacing for Above-Ground Dual-Contained Piping

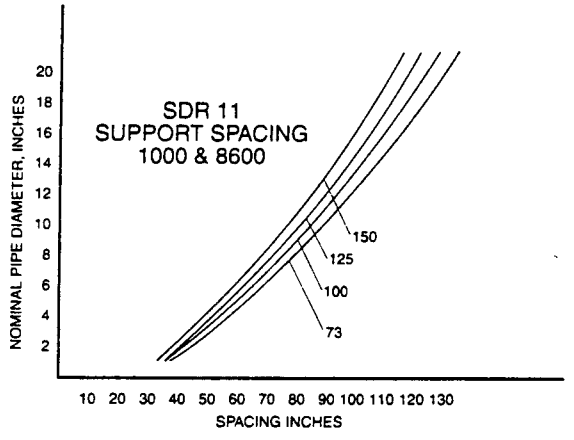

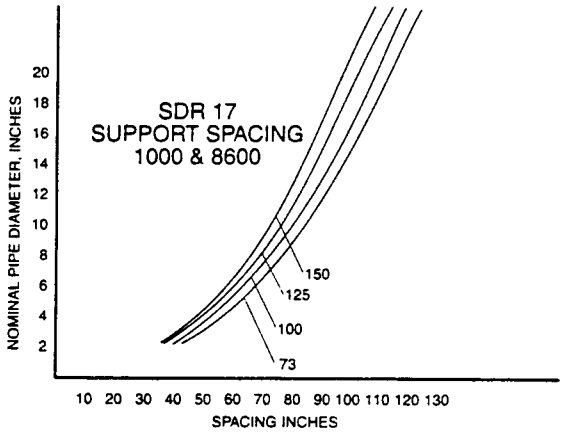

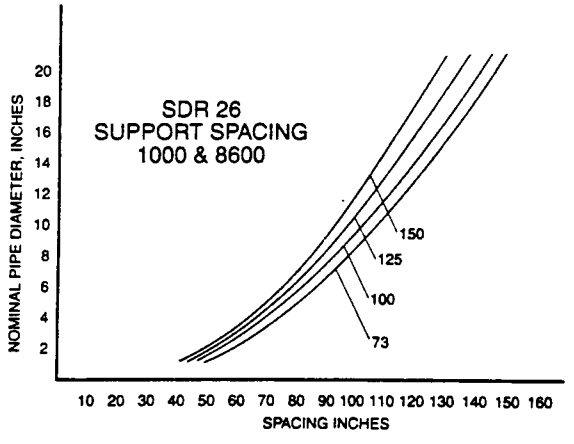

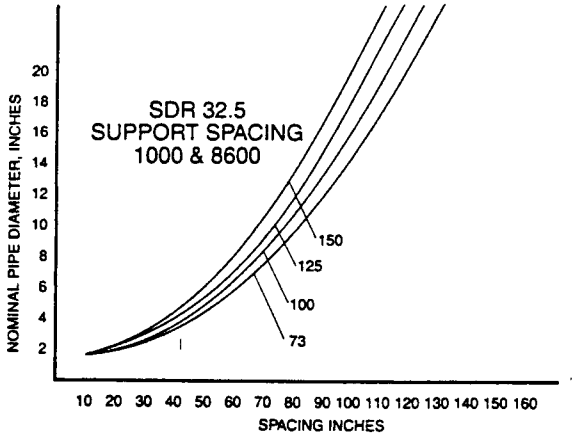

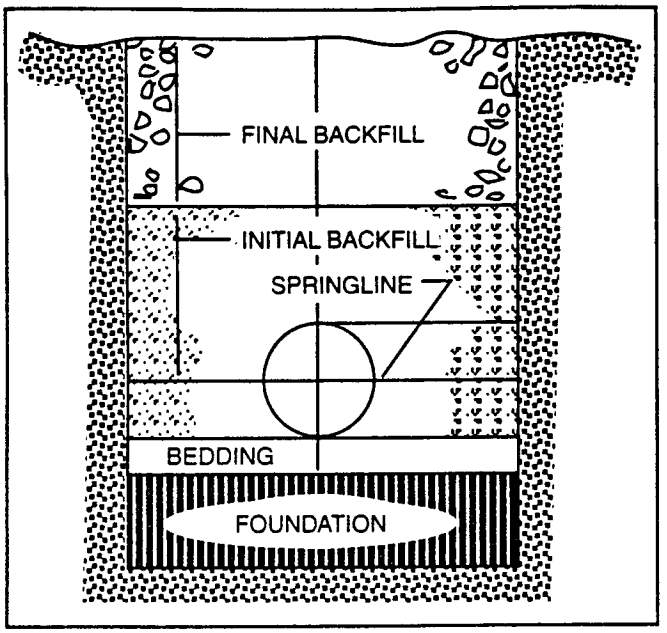

Figure 9 -- Typical underground installation of an HDPE dual-contained pipe.

is key to the long life of a dual-containment piping system.

Underground Installation

Underground installation of high density polyethylene dual-contained piping is the same as most plastic pipe. **Figure 9** shows a typical trench with backfill.

To prevent dual-containment pipe from floating during installation, hold it in place with crushed stone, chert, or soil with good bridging properties. Good compaction will provide the soil-pipe interaction desired with a plastic piping system.

Keep the containment pipe clean and dry to simplify installation and proper operation of leak detection equipment. Additional information on underground pipe installation is available from FCI.

Leak Detection Piping Requirements

Visual inspection and observation is the most obvious form of leak detection. Seldom is this adequate for liquids that require dual-containment piping.

Fluid Controls recommends TraceTek™ electronic leak detection equipment by Raychem. It is the optimum system for earliest detection and accurate location of a leak. Detection time and location are factors that determine the financial impact of a leak or spill.

The TraceTek™ sensor is an electrical cable threaded through the annular space between the inner and outer pipes. The cable conducts a weak electrical current through all pipe runs, fittings and connections of the Fluid-Lok™ piping system

Minimum clearance between the carrier pipe and the inner diameter of the containment pipe is 3/4 inches. Ports in the centralizers are aligned so that the pull-rope can draw leak detection sensing cable through the pipe and fittings **(Figure 10).**

Figure 10 -- Ports in the centralizers are aligned to allow the sensor cable to thread through the annular space

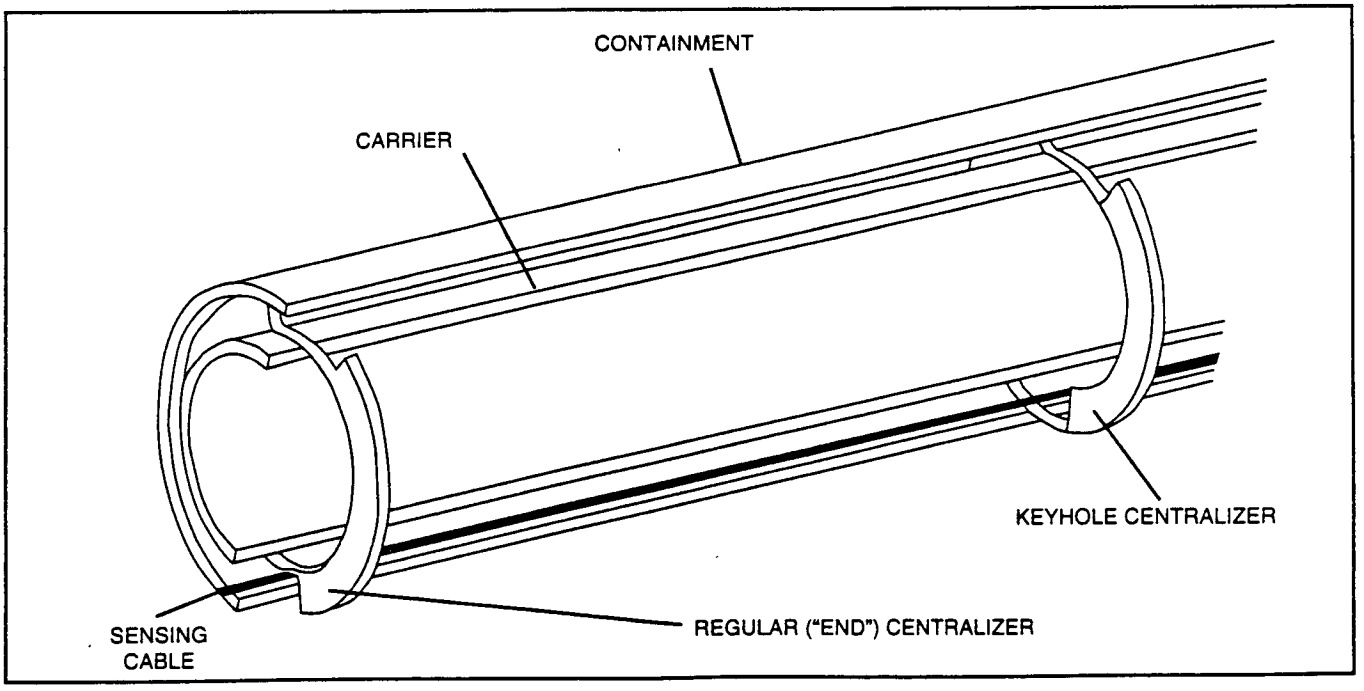

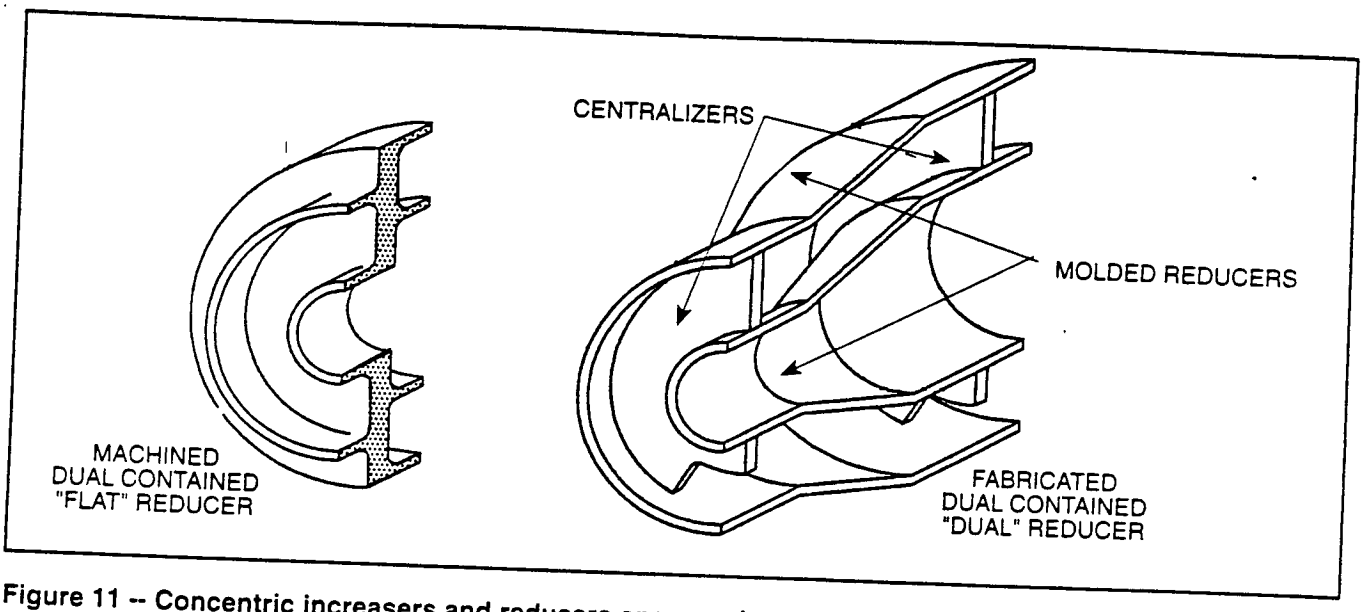

Figure 11 -- Concentric increasers and reducers ensure adequate annular space where ells and fittings must be negotiated with a sensor cable.

For butt fused pipes, the minimum clearance between the carrier pipe and the inside diameter of the containment pipe must include the butt fusion beads on the outside diameter of the carrier pipe and on the inside diameter of the containment pipe.

An example of determination of annular space within the containment pipe is:

Containment I.D. - Carrier O.D. - Weld beads / 2 = Annular space clearance

4" x 8" Dual-containment
8" pipe I.D. = 7.9"
4" pipe O.D. = 4.5"
Weld bead = .25" (calculate two beads)

(7.9" - 4.5" - .5") / 2 = 1.4" clearance

Concentric increasers and reducers ensure adequate space for leak detection equipment where ells and fittings must be negotiated with the cable (**Figure 11**). When used with leak detection sensing cable, these fittings must have a minimum 3/4-inch clearance at the 6 o'clock and the 12 o'clock positions. All Fluid-Lok™ fittings meet these leak detection requirements (**Figure 12**).

Leak Detection Access Requirements

Installation and maintenance of the sensing cable requires access ports into the annulus between the carrier pipe and the containment pipe. Standard pipe tees are used on 4-inch and smaller pipes. 4- 8-inch and greater, 6-inch reducing tees are used. Reducing tees are fabricated with saddle fusion welding. A typical tee with leak-detection cable fittings is detailed in **Figure 13**.

Figure 12 – Fluid Controls' Force Transfer Couplings® are machined with ports for leak detection sensors.

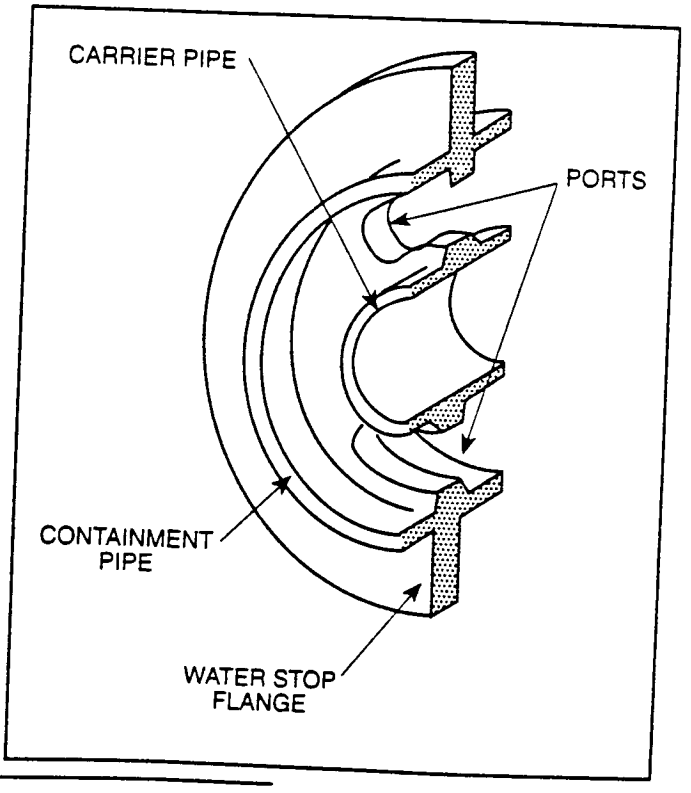

Typical access port locations for leak detection cable are:

- As needed for system installation.
- At the beginning and end terminations.
- If the annular space clearance is less than 1 inch, access ports will be each 250 feet of straight pipe run and after each 180 degrees of total (multiple) bend.
- If the annular space clearance is greater than 1 inch, access ports can be at each 500 feet of straight pipe run and after each 270 degrees of total multiple bend.

General considerations for installation of Raychem's TraceTek™ electronic leak detection system are:

- Although every cable connector does not require an access port, each access port must have a cable connector.
- Each access port must have a 4 or 6-inch nominal diameter (where pipe size allows) for manual access to the sensing cable and its connections.
- Each access port must be accessible at grade level.
- An access must be installed at each cable entry point.
- An access is required at each cable termination point.
- An access is required at each branching point.
- A service loop (an extra loop of sensing cable extending to the top of the access), must be installed for servicing the cable.

Leak Detection Components

Standard TraceTek™ components and accessories include jumper cables, panel, end termination, feed-through assemblies, and branching connectors. The information on TraceTek™ is provided by Raychem.

A jumper cable is a length of chemically resistant interconnecting cable, some with factory-installed connectors attached (**Figure 14**).

A typical feed-through assembly is a pre-assembled 3-foot modular jumper cable with a feed-through fitting, and 3/4-inch NPT nipple. The feed-through assembly also provides a sealed jumper cable entry point into the pipe annulus. The feed-through assembly is pre-assembled onto the sensing cable. Cable splicing is not required (**Figure 15**)

Branching connector attaches a branched sensing cable to the main circuit (**Figure 16**).

Each access must extend from the pipe to the surface of the grade. The sensing cable must extend up into the access with a service loop for access to the connector (**Figure 17**). Access for branched cables must be located so that the sensing cable is not pulled around sharp angles. (**Figure 18**). Intermediate access ports are required in straight runs of pipe (**Figure 19**). Access is required at the end of the piping system and at the end of each branch (**Figure 20**).

Figure 13 --Typical access port with "tee" fitting.

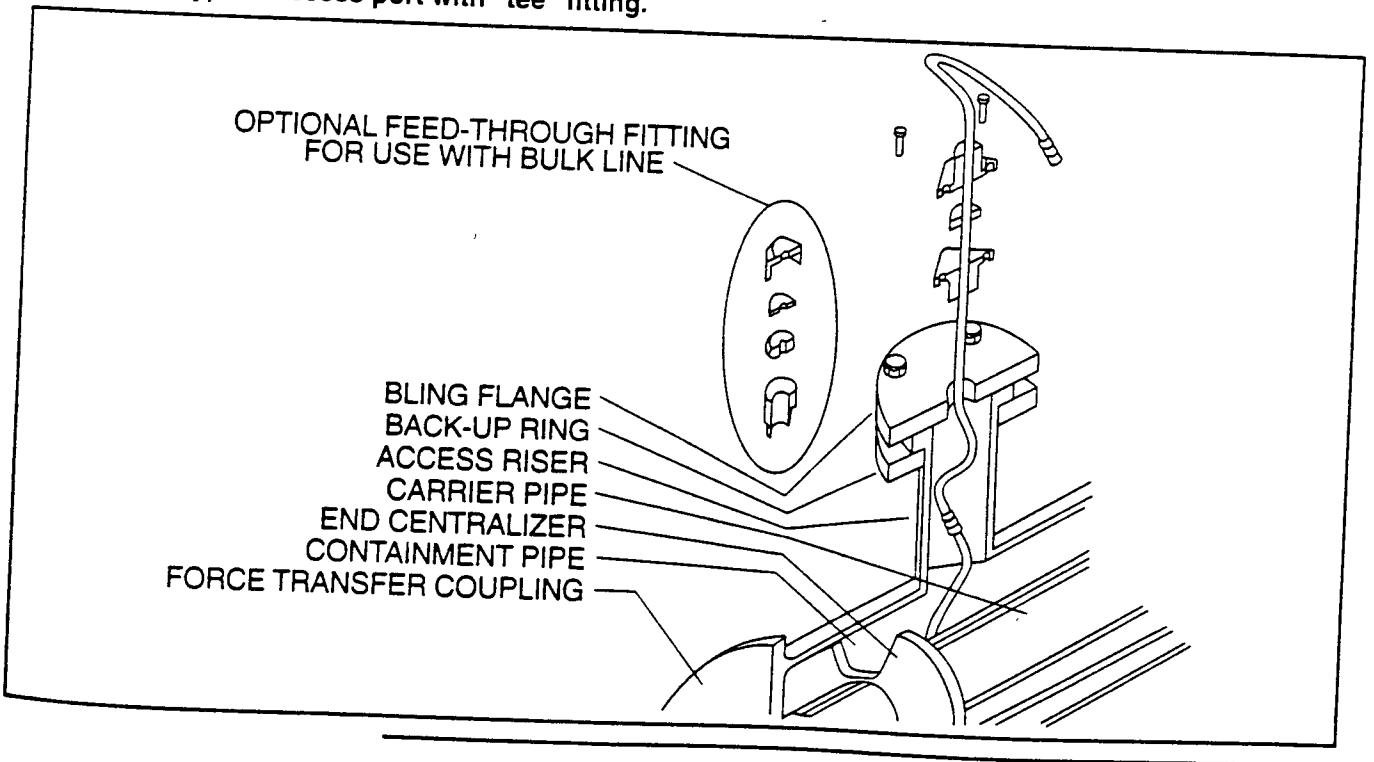

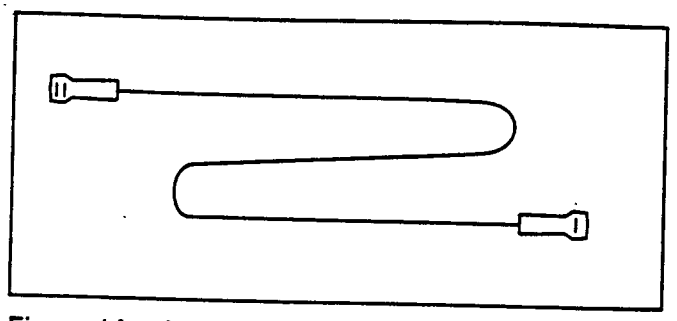

Figure 14 -- Jumper cables are chemically resistant. Some have connectors on both ends.

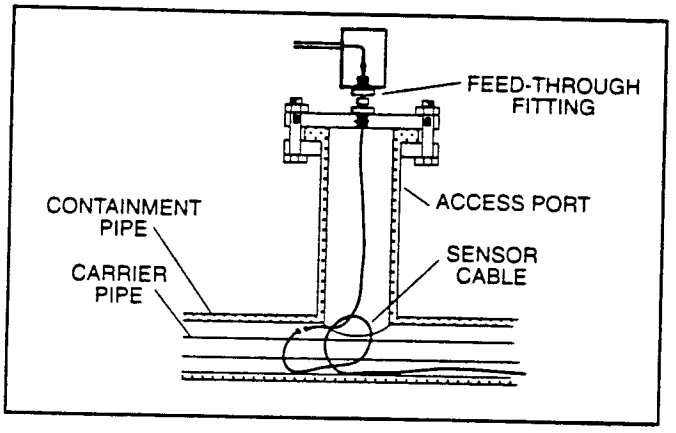

Figure 15 -- Sealed cable feed-through assembly

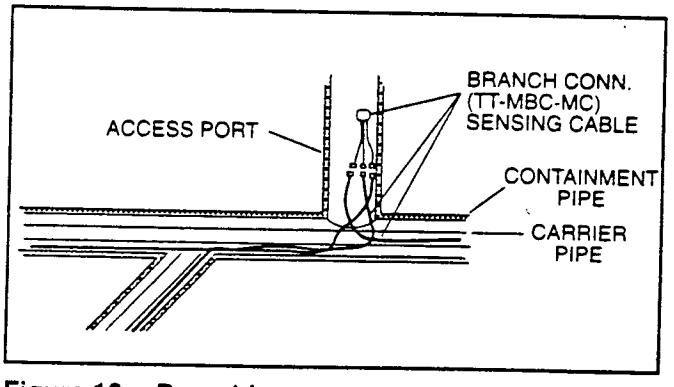

Figure 16 -- Branching connector

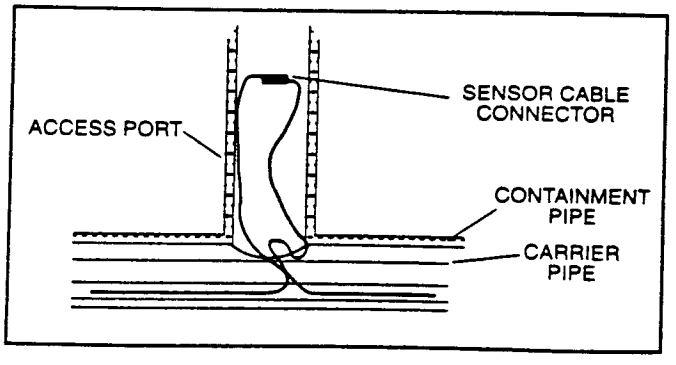

Figure 17 -- Vertical access.

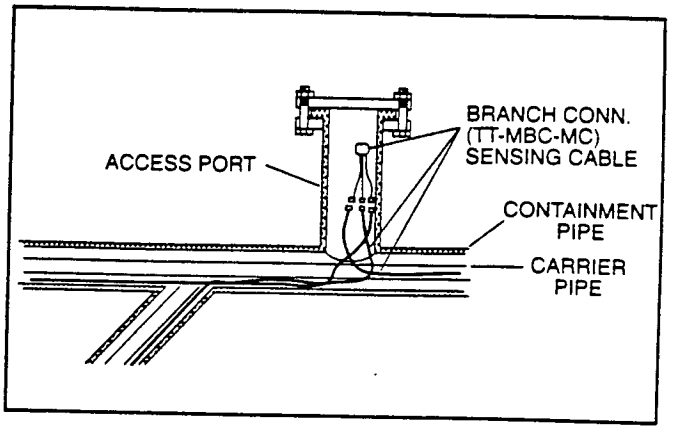

Figure 18 -- Access ports must be located so the sensing cable is not pulled around sharp angles.

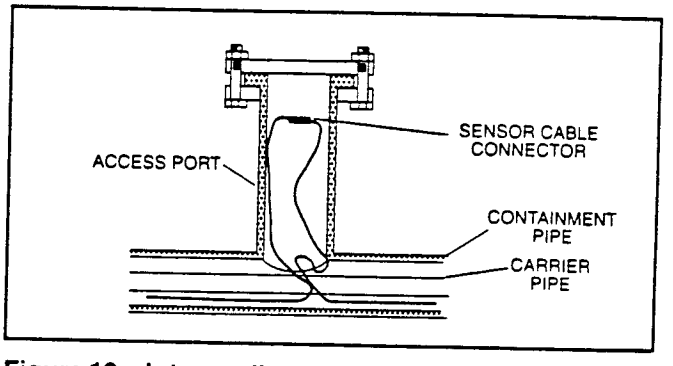

Figure 19 -- Intermediate access ports are required in straight runs of pipe.

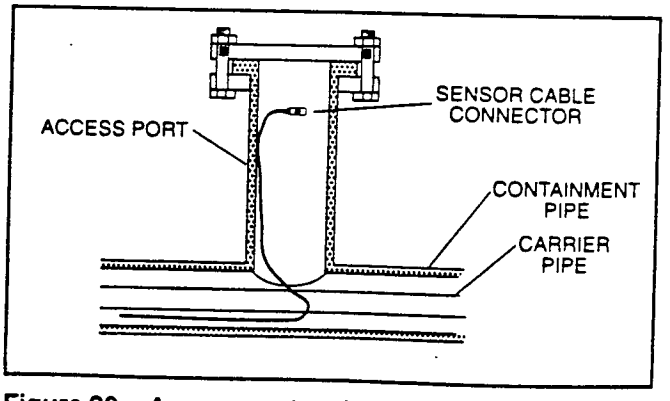

Figure 20 -- Access port at the end of a sensor cable.

Fluid-Lok™ System Installation Overview

When dual-containment HDPE pipe arrives at the installation site, it must be stored on clean, level, dry ground to prevent damage to the dual-contained pipe joints. Pipe ends, capped during shipment, must remain closed to prevent water and foreign material from contaminating the leak detection space between the carrier and containment pipes. If the pipe must be stacked during storage, follow the pipe manufacturer's specifications supplied by Fluid Controls with the shipment. Do not damage the pipe by dragging over sharp objects or cutting it with chokers when lifting.

Segments of the containment pipe having cuts or gouges in excess of 20 percent of the wall thickness must be removed. The undamaged portion of pipe can be joined after a new end piece has been welded to the pipe. Fused segments of pipe must be handled so as to avoid damage from bending. Nylon slings are recommended for lifting HDPE pipe.

In the Fluid-Lok™ system, up to 40-foot sections of HDPE pipe will be joined into a continuous run at the job site. With simultaneous butt fusion, the usual method of joining the Fluid-Lok™ system, 1/4 to 1 inch of the carrier pipe will extend past the end of the containment pipe for alignment and testing for relative movement. After the pipe ends to be welded are locked in the welding unit, the carrier pipe must not move.

The butt-fusion equipment will align, face, heat, and provide pressure to fuse the pipe. A split-face heater is used to join the pipe when dissimilar materials or installation requirements do not allow simultaneous fusion. Pull-ropes and cables can be installed in hybrid combinations of dual-contained thermoplastic pipe.

Pull-cable Installation

Fluid-Lok™ HDPE and other thermoplastic pipe can be purchased with a pull-rope pre-installed in the pipe sections and fittings. The pull-rope is used to thread a continuous pull-cable through the system.

When the piping system is installed, the cable will be used to thread a leak detection sensor cable through the pipes. A pull-cable can be installed as the pipe joints are simultaneously fused. The cable can also be installed when dissimilar materials are used for the carrier and containment pipes.

The pull-rope is normally 1/4-inch diameter hollow braided poly-pro rope. As the pipe is fused, the pre-installed rope is replaced with a continuous rope or pull-cable. The rope must run from access port to access port.

At the owner's or installing contractor's request, experienced FCI technicians will go on-site to train personnel, lend technical assistance, perform quality assurance, and assist with testing. Simultaneous butt fusion and the installation of leak detection cable requires training in addition to that received by most plastic pipe installers.

Testing

The Fluid-Lok™ system carrier pipe is tested at 10 feet of head for gravity systems and up to 1.5 times the specified hydrostatic working pressure.

The annular space between the carrier and containment pipe is tested at 15 psi pressure, unless otherwise specified. Air testing prevents contamination of the annulus with water. The system is tested prior to installation of the leak detection system.

A performance test of the electronic leak detection system is required after installation. This is describe normally the acceptance criteria for project completion and contractor sign-off. (See Trace-Tek installation manual.)

Leak Detection Cable

With continuous leak detection cable, when a leak occurs, it can be located within one foot in one thousand feet of pipe. Sequential steps and guidelines for installation of Raychem's TraceTek™ system are:

The TraceTek™ alarm module must be mounted, connected to electrical power, and tested as indicated in the manufacturer's instructions. The leader cable and jumper cable will be installed between the TraceTek™ alarm module and the electrical junction box at the pipe's cable entry access point **(Figure 21).**

Before installing sensing cable, be sure that the pipe has been pressure tested and the annulus is clean and dry. The previously installed pull-rope lengths must run from access port to access port and move freely in the pipe. Attach the female connector at the end of the sensing cable to the TraceTek™ pulling tool. **(Figure 22).**

Attach the TraceTek™ pulling tool to the pull-rope by looping the pull-rope through the eye of the pulling tool **(Figure 23)**. The loops must be strong and have a low profile to fit between the openings in the

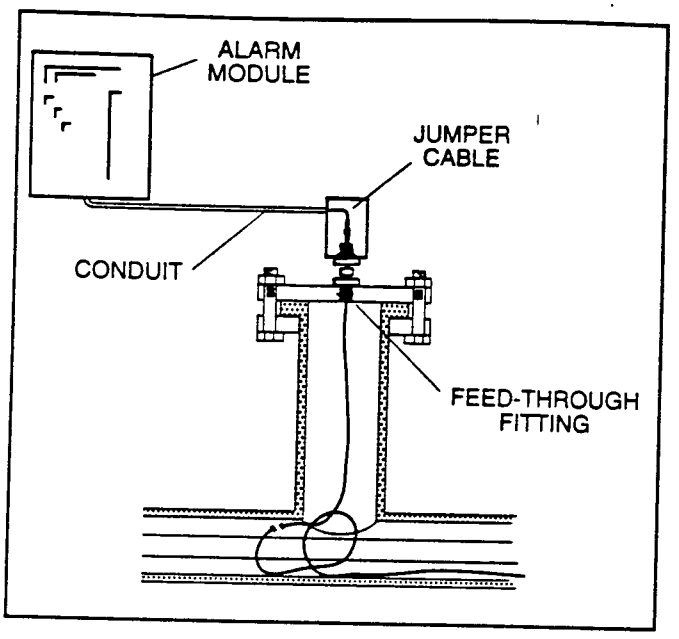

Figure 21 – Alarm module and access port.

centralizers. Wrap electrical tape around the loop to provide a smooth pull through the pipe.

Pull the first length of sensing cable into the annulus and terminate the end of the cable with an end termination. Test the cable with the TraceTek™ Portable Test Box (TT-PTB). The Portable Test Box must read 10 microamperes or less. The cable can then be installed from access port to access port and checked with the portable test box. If all sections meet electrical test requirements, connect all sections together. With all sections connected, use the portable test box to check the system again. The PTB should read 10 microamperes or less. Cover each connection with a heat shrink plastic insulating tube.

Drying and Purging the Annular Space

In some applications, moist ambient air must be replaced with dry air after the leak detection cables are installed and the annular space is sealed and pressure

Figure 22 – Pulling tool

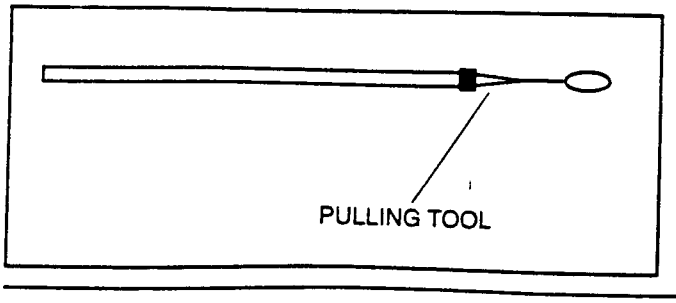

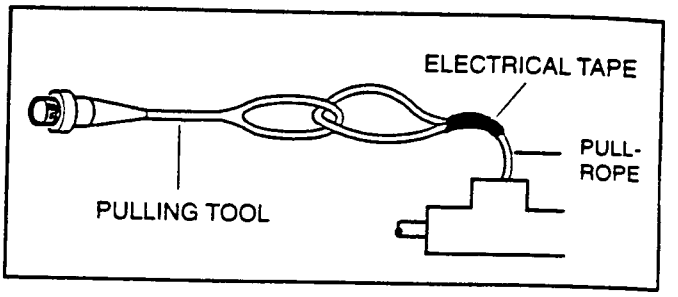

Figure 23 – Pull-rope and pulling to l

tested. Fluid-Lok™ technicians will assist with this closing of the system.

To remove the moisture, circulate ambient air through the annulus by sucking air out with air-flow amplifiers at one port of the Fluid-Lok™ system. Air flowing in from another port will evaporate residual water from the containment.

Because ambient air contains some moisture, where necessary, replace it after drying with dry plant air at a dew point of -20 degrees F or dry nitrogen from bottles.

Leak Detection Map

Fluid Controls provides a map from drawings furnished by the contractor. The map of the piping and TraceTek™ system will specify the location of the alarm module, cable connections, access points, end terminations, and landmarks.

Cable distance readings will be recorded on the map and will correlate with the TraceTek™ alarm modules's digital readout. The distance readings are recorded according to the mapping instructions included with the TraceTek™ sensor cable.

Buildings, walls and equipment will be located on the map to assist in identification of cable and piping location.

The map will be mounted near the TraceTek™ alarm module for easy reference and quick identification of leak locations.

Fluid-Lok™Specification for Dual-Containment Piping High Density Polyethylene Pipe and Leak Detection

SECTION 15000 Mechanical

1. General:

1.1 This specification shall govern the materials and installation of polyethylene dual contained system of pipe, (structures) and leak detection. Materials identified in ASTM D-2657 shall be purchased according to this specification. Installation shall be performed in accordance with this specification. The containment piping and leak detection are one system. The general contractor shall be responsible for the overall operation of the complete system. The mechanical contractor shall be made aware of the requirements of Section 16000 Electrical and is responsible for the acceptable condition of the containment piping. No deviation from this specification shall be allowed without express written consent of the engineer.

1.2 Reference of standards and certifications,

1.2.1 - For the Piping System

- ASME B31.8 x.N Hydrostatic Testing Guidelines
- AWWA C-901 - Polyethylene Pressure Pipe, Tubing and Fittings, 1/2" through 3" for Water
- AWWA C-906 - Polyethylene (PE) Pressure Pipe and Fittings, 4" through 63", For Water Distribution
- ASTM F-714 - Polyethylene Plastic Pipe Based on Outside Diameter (3" to 63")
- NSF Std #14 - Plastic Piping Components & Related Materials
- ASTM D-638 - Test Method for Tensile Properties of Plastics
- ASTM D-790 - Test Method for Flexural Properties of Unreinforced and Reinforced Plastics and Electrical Insulating Materials
- ASTM D-1238 - Test Method for Flow Rates of Thermal Plastics by Extrusion Plastometer
- ASTM D-1248 - Specification for Polyethylene Plastics Molding and Extrusion Materials
- ASTM F-1248 - Determination of Environmental Stress Crack Resistance (ESCR) of Polyethylene Pipe
- ASTM D-1505 - Test Method for Density of Plastics by the Density Gradient Technique
- ASTM D-1599 - Test Method for Short Time Hydraulic Failure Pressure of Plastic Pipe, Tubing and Fittings
- ASTM D-1693 - Test Method for Environmental Stress Cracking of Ethylene Plastics
- ASTM D-2122 - Method for Determining Dimensions of Thermal Plastic Pipe and Fittings
- ASTM D-2239 - Polyethylene Plastic Pipe (SIDR-PR). (Iron Pipe Size; Inside Diameter)
- ASTM D-2657 - Guideline for Ployolefin Thermoplastic Butt Fusion Heat Welding
- ASTM D-2737 - Polyethylene Plastic Tubing (Copper Tube Size; Outside Diameter)
- ASTM D-2837 - Method for obtaining Hydrostatic Design Basis for Thermal Plastic Pipe Materials
- ASTM D-3035 - Polyethylene (PE) Plastic (DR-PR) Based on Controlled Outside Diameter (1/2" to 24")
- ASTM D-3350 - Specification for Polyethylene Plastics Pipe and Fittings Material
- ASTM D-4218 - Test Method for Carbon Black Content in Polyethylene Compounds by the Muffle-Furnace Technique
- FM, Factory Mutual Approved
- Plastic Piping Institute Best Practices TR 31/9-79

1.2.2 - For the Leak Detection

- UL, Underwriters Laboratories listed
- FM, Factory Mutual Approved
- CSA certified
- approved for D1D1, groups C and D

1.3 Experience of supplier shall not be less than 5 years with these systems and materials.

1.4 The dual containment piping system shall be a Fluid-Lok™ system from Fluid Controls, Inc. (1-800-462-0860) or equal. The leak detection system shall be the TraceTek™ system from Raychem Corp. (as supplied by Fluid Controls, Inc.) per Section 16000 Electrical.

2. Scope of Work -

This specification shall be for:

2.1 The purchase of prefabricated high density polyethylene dual contained pipe, designed for simultaneous butt fusion welding, and capable of accepting the installation of start-up of the leak detection system.

2.2 Training and/or field fusion of the dual containment piping system, testing of the dual contained piping system and installation of the cable into the piping system are part of this scope of work.

2.3 A pre-construction meeting shall be held to discuss the project and develop an installation plan and QA/QC plan. The contractor, the piping supplier, the engineer and the owner or his representative shall attend.

2.4 The pipe system application's requirements are: a carrier pipe pressure requirement of _____ psi, a flow rate of _____ (per pipe size), a maximum burial depth of _____ ft., with a water table of _____ ft. The temperature range of operation will be _____ °F low to a high of _____ °F. The minimum low temperature will be _____ °F and the maximum high temperature will be _____ °F.

3. Materials

3.1 PIPE AND FITTINGS - The pipe used to fabricate the system supplied under this specification shall be high density, extra high molecular weight polyethylene pipe (equal to Driscopipe 1000 as manufactured by Phillips Driscopipe, Inc.). The pipe and fittings shall conform to ASTM D-3350 with minimum cell classification values of 345434C. The pipe and fittings shall be made from the same polyethylene resin base which meets this specification.

3.2 PHYSICAL PROPERTIES OF PIPE COMPOUND

3.2.1 Density - the density shall be no less than 0.955 gms/ccm as referenced in ASTM D-1505.

3.2.2 Melt Index - the melt index shall be no greater than 0.15 gms/10 minutes when tested in accordance with ASTM D-1238 - Condition.

3.2.3 Flex Modulus - flexural modulus shall be 110,000 to less than 160,000 psi as reference in ASTM D-638.

3.2.4 Tensile Strength at yield - tensile strength shall be 3,200 to less than 3,500 psi as reference in ASTM D-638.

3.2.5 ESCR - Environmental Stress Crack Resistance shall be in excess of 1,500 hours with zero failures when tested in accordance with ASTM D-1693 - cond. C.

3.2.6 Hydrostatic Design Basis shall be 1,600 psi at 23 degrees C when tested in accordance with ASTM D-2837.

3.2.7 Tested according to ASTM F-1248, ring specimen ESCR is zero failures in more than 1,000 hours.

3.2.8 No slow-crack-growth pipe ring failures in more than 32 days of testing at 1600 psi, cycled at 9 RPMs according to Battelle Rotary Test.

3.2.9 The HDPE pipe extruder and resin manufacturer shall be the same company. Third party testing data may be required by the engineer to certifying the manufacturers material data.

3.2.10 Chemical resistance data from the pipe manufacturer on the application will be provided as part of the submittal. The engineer may require a certification letter from the manufacturer as part of the submittal.

3.3 Deviations - If a contractor chooses to submit a bid that does not meet all of the requirements of this specification, the bid shall include a written description of the deviations with data that show the magnitude of the deviations and the justification for the deviation from the specification. The decision to accept material deviating from this specification shall be the responsibility of the specifying engineer and must be approved in writing.

3.4 Dual contained pipe and fittings may be rejected for failure to meet any of the requirements of this specification.

4. Dual Containment Piping System:

4.1 The dual containment piping system shall be Fluid-Lok™ Dual Contained pipe and fittings as manufactured by Fluid Controls, Inc.; Huntsville, AL

4.1.1 Pipe supplied under this specification shall have IPS (Iron Pipe Size) OD and shall meet ASTM D-3035. Pipe sizes shall be as specified in the following table. The dual

containment combination, inner by outer pipe, the ID and OD of the carrier and containment, and the SDRs shall be specified herein.

Pipe Size	Carrier ID	Carrier OD	Carrier SDR	Cont ID	Cont SDR

4.1.2 Fittings shall be manufactured to the same IPS ID and OD as the pipe.

4.1.2.1 - All fittings shall meet the pressure requirements of the system as specified and based on ASTM D-2837 Hydrostatic Design Basis for thermoplastic Pipes.

4.1.2.2 - All molded fittings shall be manufactured per ASTM D-3261.

4.1.2.3 - Pipe joints and fittings shall be supplied to the job site ready for simultaneous butt fusion. The fabricator shall show that the materials are capable of butt fusion and shall provide a procedure to consistently produce sound welds.

4.1.2.4 - Cleanouts shall be installed every 600 foot or as per the drawings. Cleanouts shall be capped with metallic blind flanges and a full blind gasket (to prevent condensation of the inside of the metal blind) for easy access. (Alternate: Position cleanouts in leak detection manholes, valve boxes or well heads.)

4.2 Carrier pipe support shall be with full round centralizers welded to the carrier pipe. Centralizer support spacing per Plastic Piping Institute standards and Fluid Controls, Inc., best practice shall be _____ inches per *(each pipe size).*

4.2.1 The centralizers shall be machined for accuracy from pipe grade resin 1/2" sheet stock HDPE. Centralizers have openings at 6 o'clock and 12 o'clock per the drawings. The opening at 6 o'clock will permit the flow of liquid between the carrier pipe and the containment pipe. Then minimum vertical opening shall be .75 inches or greater including allowance for internal beads. The minimum horizontal opening shall be 1.25 inches. The opening at 12 o'clock shall be the same dimensions. See typical detail **(Figure 10).**

4.2.2 The OD of the centralizer shall match the ID of the containment piping as closely as possible.

4.3 Force Transfer Couplings® shall be used to anchor the differential and the total forces from thermal expansion/contraction. The Force Transfer Couplings® shall be a mass anchor machined from solid high density polyethylene pipe grade resin. The coupling shall anchor the inner carrier pipe and the outer containment pipe to an external anchor point **(Figure 6, 7 and 12).** Force Transfer Couplings® shall be used to protect fittings from thermal expansion as required by the manufacturers thermal analysis of the system based on the standards outlined in this specification.

4.3.1 - Force Transfer Couplings® shall be simultaneously fused into the system.

4.3.2 - Solid Force Transfer Couplings® shall be used to segment the annular space as required and drawn.

4.3.3 - Force Transfer Couplings® shall be ported unless indicated on the drawings. Ports shall provide a continuous annular space and match the openings in the centralizers. POSITION PORTS PROPERLY DURING INSTALLATION.

4.4 End termination/Force Transfer Couplings® shall be used to seal the system at both ends. The coupling shall be simultaneously butt fused to the carrier and containment pipe to seal the annular space. No other closure or termination will be allowed. This fitting will also provide the transition to single wall piping.

4.5 Tie-ins to other piping systems and /or equipment where butt fusion is not applicable shall be with HDPE flange adapters and coated metal back-up rings, unless otherwise specified by the engineer on the drawings. Mechanical compression or clamp style fittings will not the allowed under this specification.

5. Leak Detection System Requirements:

5.1 Piping and Fittings:

5.1.1 - All pipe and fittings shall have a pre-installed pull rope of 0.25 inch hollow braid polypropylene rope. All pipe and fittings shall come capped with rain tight pipe end caps.

5.1.2 - Access ports are required to provide access to the annular space. These provide the pull points for sensing cable systems or the points for low point detection. Access ports shall be _____ inches nominal OD (minimum 4 inches) sealed with blind flanges that extend to 6" below grade.

Each access port shall be protected by a cover box as drawn. Locate as drawn.

5.1.3 - Low point drains provide drainage for the annular space. Locate as drawn.

5.1.4 - Locate solid Force Transfer Couplings® as indicated on the drawings to compartmentalize the containment as required for the leak detection system.

6. Execution:

6.1 Pipe shall be prefabricated prior to shipment to the jobsite. No on-site fabrication or alterations to the pipe, fittings or system shall be allowed without express written consent of the engineer and the piping supplier.

6.2 Pipe shall be stored on clean, level, dry ground to prevent undue scratching or gouging of the pipe. The pipe ends shall be capped to prevent water and dirt from contaminating the leak detection space between the pipes. If the pipe must be stacked for storage, such stacking should be done in accordance with the pipe manufacturer's recommendation. The handling of the pipe should be done in such a manner that it is not damaged by dragging over sharp objects or cut by chokers or lifting equipment.

6.3 Segments of pipe having cuts or gouges in excess of 20% of the wall thickness of the pipe shall be cut out and removed. The undamaged portion of pipe can be rejoined after a new end piece has been welded to the pipe.

6.4 Sections of polyethylene pipe shall be joined into continuous lengths on the job site following the guidelines of ASTM D-2657, using simultaneous butt fusion as the method of joining the dual contained polyethylene piping system. The pipe shall have from 1/2" to 1" of the carrier pipe extending out past the containment pipe to test the alignment and test for movement. No movement of the carrier pipe is acceptable prior to welding.

6.4.1 - System supplier shall approve all fusion equipment used for the containment system. The butt fusion equipment used to join the pipe shall be capable of meeting all normal butt fusion requirements; alignment, heating, trimming and fusion pressure.

6.4.2 - Simultaneous fusion equipment shall be capable of simultaneous installation of the leak detection sensor pull rope during the fusion welding process, leaving a free running pull rope from access port to access port upon completion of the pipe joining process.

6.5 Fused segments of pipe shall be moved to avoid damage to the pipe. Handle dual containment pipe with care. Limit bending of the pipe. Nylon slings are preferred.

6.6 A representative of the dual containment pipe fabricator shall be on site to train the contractor's personnel. A minimum of _____ week(s) training will be required on site.

6.6.1 - A manufacturer's technician shall be required on site for the duration of the job for QA/QC and installation oversight. (If required by project difficulty)

6.6.2 - A manufacturer's technician shall be required on site for _____ days to assist with the piping system pressure test. (If required by project difficulty)

6.6.3 - A manufacturer's technician shall be required on site for _____ days to assist with the installation of any leak detection sensors or cable in the piping system. (If required by project difficulty)

6.7 Modification to the system will be done only by a representative of the dual containment pipe fabricator or factory trained installer. This includes changes in lengths of pipe and special tie-in connections.

6.8 Direct Burial:

6.8.1 - The trench and trench bottom shall be constructed in accordance with ASTM D-2321-Section 7.

6.8.2 - Embedment materials shall be Class I, Class II or Class III materials as defined by ASTM D-2321-Section 6. Class I materials are preferred.

6.8.3 - Bedding of the pipe shall be performed in accordance with ASTM D-2321-Section 8. Compaction rates shall be _____ % Standard Proctor Density in accordance ASTM D-2321.

6.8.4 - Haunching and initial backfill shall be as specified in ASTM 2321-Section 9 using Class I materials. Materials used and Compaction rates shall be specified by the engineer on the drawings.

6.8.5 - Special Conditions, ASTM 2321-Section 11.2, Minimum Cover for Load Applications,

Section 11.3, Use of Compaction Equipment and Section 11.4 Removal of Trench Protection shall apply unless directed otherwise by the engineer.

6.9 Leak Detection:

6.9.1 - The clean and dry installation of the containment piping's annular space is critical. The pipe installation contractor shall insure that the pipe's annular space is clean and dry.

6.9.2 - The pipe installation contractor shall insure that the pull rope is free running from access port to access port. The pull rope shall be continuous and knot free between access ports and be unobstructed and loose in the pipe.

6.9.2.1 - The contractor shall take care that the weld bead does not obstruct the .75" clearance required for the pull rope and sensing cable at the 6 o'clock position in the containment space.

6.9.3 - The pipe installation contractor shall install the leak detection sensor in the piping with the cable feed-thru assemblies located in the beginning access port in each line. The sensor will be tested in place to insure the clean and dry condition of the system and the quick connection/start up to the system by the electrician/owner.

6.10 System Testing:

6.10.1 - The carrier (inside pipe) shall be tested at 10 feet of head or 5 psi air for gravity systems. Air pressure should be allowed to equalize for 10 minutes, then monitor the pipe for the test period of 10 minutes, during which no drop in pressure shall be allowed.

6.10.2 - For pressure systems use a hydrostatic test of 1.5 times the working pressure rating of the lowest pressure rated component in the system. A pressure test of _____ psi will be required for the force main(s). The system should be brought up to pressure and allowed to equalize for 3 hours, then the pressure shall be monitored for a 3 hour test period. Since HDPE is a flexible material, pressure drop can occur for reasons other than a leak, such as a temperature change. Acceptable make-up water tables per PPI TR 31/9-79 and ASME B31.8 x.N shall be provided by the piping system supplier. If no significant pressure drops occur or there are no visual signs of leaks during the final test period, then the pipeline passes the test.

6.10.3 - The annular space between the carrier and containment pipe shall be tested at _____ psi air pressure. Air pressure should be allowed to equalize for 10 minutes, then monitor the pipe for the test period of 10 minutes, during which no drop in pressure shall be allowed.

6.10.4 - The final leak detection system test will be performed by the electrician. The piping contractor will have the leak detection supplier supervise and certify the installation of the leak detection sensors and the clean and dry condition of the pipe using the leak detection system's portable test box.

7. Submittals:

7.1 General - Applicable manufacturers data required to demonstrate compliance with this specification. Submit on supplier's experience with these systems.

7.2 Scope of Work - Submit system bill of materials. Submit arrangements for training and QA/QC support from piping supplier. Piping supplier shall provide a flow, burial and thermal stress analysis of the system's application parameters for the engineer's approval.

7.3 Pipe and Materials - Submit on cell class according to ASTM D-3350 and applicable standards identified by the cell class.

7.4 Dual containment Piping System - Submit carrier and containment pipe sizes per ASTM D-3035. Submit hydrostatic design basis per ASTM D-2837. Submit on any molded fittings in the system that shall meet ASTM D-3261. Submit details of typical fittings including centralizers, force transfer couplings, etc.

7.5 Leak Detection System Requirements - Submit data indicating compliance with the specification Section 5.

7.6 Execution - Submit data on system fusion welding procedure(s) and welding equipment required. Submit handling and storage data. Submit trenching and burial data per ASTM D-2321. Submit comprehensive system testing guidelines. Submit manufacturer's field technical support schedule for training, QA/QC oversight, testing and leak detection sensor installation.

Fluid-Lok™ Specification Guidelines for Leak Detection and Location Systems

Aqueous Chemical and Water Leak Detection for Double Containment Piping, Structures and Storage Tank Systems

SECTION 16000 - Electrical

1. General:

1.1 Furnish a complete leak detection system including electronic alarm modules, aqueous chemical/water sensing cable, graphic display map, and auxiliary equipment. The system shall be capable of automatically detecting the presence of aqueous chemicals or water at any point along the continuous length of pipe and in the tank interstitial space. The system shall locate the point of origin of the liquid, with a digital display, to within +/- 1 foot. No more than 1 foot of liquid, in contact with a sensing cable at a depth of 1/16 inch, shall be required to cause an audible alarm at the electronic alarm module.

1.2 The system shall be UL listed, FM approved, and CSA certified. The sensing circuits shall be intrinsically safe for use in Class I, Division I, Group C and D environments when installed in accordance with the manufacturers' installation instructions.

1.3 The system manufacturer shall have at least five years of experience with leak detection and location sensor technology and shall provide written verification of current ISO 9001 registration.

1.4 The system shall be the TraceTek™ TT3000 Leak Detection and Location System manufactured by Raychem Corporation, TraceTek Products Group, Menlo Park, California and supplied by Fluid Controls, Inc. 1-800-462-0860.

2. Products:

2.1 Each electronic alarm module shall be capable of monitoring a minimum of 2000 feet of sensing cable. The alarm modules shall continuously monitor all sensing cable for liquid contact. Contact with any aqueous chemical or water shall result in an audible alarm, a "leak" LED signal, actuation of an output relay, and a digital display of the distance to the liquid location.

The electronic alarm modules shall require no operator programming and shall be capable of automatically calibrating the entire system whenever power is applied.

2.2 The aqueous chemical/water sensing cable (TT3000) shall be resistant to corrosion. It shall detect the presence of aqueous chemicals and water. The cable shall be constructed of two sensor wires and two insulated wires embedded in a fluoropolymer carrier rod. The sensor wires shall be jacketed with a conductive fluoropolymer. The cable shall be constructed with no metal parts exposed to the environment. The sensing cables shall be capable of accommodating any number of branches using branching connectors (TT-MBC-MC).

2.3 Jumper cable shall be available to interconnect sensing cables or to facilitate remote mounting of the electronic alarm module. Jumper cable may not add more than .01% of additional length to the leak detection circuit.

2.4 A portable test box (TT-PTB-1000) shall be provided to the leak detection system installer. The portable test box shall be capable of field leak location. The portable test box shall be capable of monitoring system leak detection circuitry microamps. It shall become the property of the owner, upon system acceptance, for use in the ongoing preventive maintenance of the system.

3. Execution:

3.1 All system components shall be installed in accordance with the manufacturers' installation instructions. The piping installer shall be responsible for providing a clean and dry containment pipe with free-running pull ropes and a minimum clearance of 3/4 inch at the 6 o'clock position of the containment space and tank monitoring well low points. The minimum clearance shall be maintained along straight lengths of pipe, at joints, and at elbows. The piping installer shall be responsible for installation of the sensing cable and

system circuit certification consisting of a clean/dry, sealed annular space with feed thru connectors and a sensing cable circuit with less than 10 microamps over the entire circuit. The electrical contractor shall provide and install all connections, junction boxes, conduit, etc. according to applicable building codes. The panel shall be installed per the drawings. The electrical contractor shall provide for system start-up, functional testing, and mapping of the system. Supervision and training shall be provided by Fluid Controls, Inc. or its trained local representative.

3.2 Upon completion of the system installation, a factor pre-connectorized 5 foot long aqueous chemical/water sensing cable shall be temporarily installed at the far end of each leak detection circuit. The sensor shall be immersed in approximately 1 foot of water, at a depth of 1/16 inch, to confirm that an audible alarm is generated at the alarm module and that the appropriate distance to the leak is displayed. The installer shall perform and certify the tests in the presence of the owner's representative.

3.3 Upon completion of the test, and removal of the temporary test sections, the piping and tank containment systems shall be purged with -20 degree F dew point air or dry nitrogen to displace the ambient air. The containment systems shall be sealed upon completion of the purge.

3.4 A graphic display map prepared from "as built" drawings shall be furnished upon completion. The map shall indicate the location of the sensing cables, piping access ports, change of cable direction, and cable distance readings per the manufacturer's instructions. The map shall be mounted near the alarm modules.

4. Submittals:

4.1 General - Applicable manufacturers data required to demonstrate system capabilities and compliance with the specification. Submit company literature demonstrating an intrinsically safe sensing circuit for C1D1 environments. Submit on UL, Factory Mutual and CSA approvals.

4.2 Products - Submit information on supplier's experience and a list of components for the system. Submit system components cut sheets and manuals.

4.3 Execution - Submit manufacturers installation manuals. Submit on manufacturer's installer training schedule and/or experience with the system's installation. Submit sample graphic map of the system.

Fluid-Lok™ HDPE Dual Containment Piping Systems Comprehensive Testing Guidelines

1. Introduction

Fluid Controls has worked on specifications for many HDPE dual contained piping system projects. Our specification guidelines have been used as a guide for commercial, industrial, municipal, Superfund, Corp of Engineers, DOD and DOE projects. Our systems are handling hydrocarbons, acids, bases and chlorinated compounds over a wide range of temperatures in gravity and force main applications.

Every system is different. So each engineer must give sufficient thought to their system's testing procedure. These guidelines are intended to give an overall view of the applicable guidelines that we recommend for testing of our Fluid-Lok™ HDPE Dual Containment Piping Systems.

Many specifying organizations, like the Corp of Engineers, like to refer to ASTM standards. ASTM D-1714-92 is a specification for low pressure air testing of gravity sewers using "plastic" pipe. This is a spec actually intended for PVC gravity sewer systems. The safety considerations included in this standard should be followed. There are no ASTM standards specifically for hydrostatic or air testing on HDPE. Most HDPE manufacturers have testing guidelines for their products, unfortunately these testing guidelines are general and are for single wall piping systems. Since the Fluid-Lok™ system uses Phillips 66 Driscopipe as its basic single wall piping components, we use Driscopipe's basic engineering data as a starting point for our test guidelines (a comprehensive document, Driscopipe Technical Note #35 Hydrostatic Testing of HDPE Piping Systems, is available from Fluid Controls, Inc.)

Testing of the leak detection system is covered by other documents, depending on the type of system used with your patented Fluid-Lok™ dual containment piping system. As a general rule, any leak detection monitoring system should have an acceptance test (other than turning it on and not getting a leak indiction) that indicates the clean and dry nature of the annular space. This is especially true if TDR (timed domain reflectometry) system is being used.

2. General Considerations

A. Containment Testing - In dual containment piping systems, the inner (carrier) pipe is the system's actual "pipe line" that performs the fluid transmission function of the dual contained piping. The outer (containment) pipe is the means by which the carrier can be leak detected as well as providing secondary containment. The "secondary containment" function of the containment piping is actually a bonus; the regulatory thrust for dual containment comes from the need to leak detect the primary vessel, the carrier pipe. The containment pipe creates a controlled environment, the annular space, around the carrier pipe that allows the carrier to be leak detected by looking for a "change" in that controlled environment. This is an important consideration for these types of systems. The integrity of the annular space must be demonstrated by a pressure test, but the test medium for the annular space should not contaminate that space with a material that can confuse the leak detection capability of the system. For this reason water is not a good test medium for the annular space of dual containment systems. Even in a fuel system, a leak in the containment can introduce water into the system. If water is used in testing the annular space the system must be dried or the integrity of the containment cannot be assured. The clean and dry condition of the annular space is required by many leak detection monitoring system suppliers as a prerequisite for installing their systems. For this reason an air pressure test is our recommendation for the annular space of these types of systems.

The problem with air testing relates to the compressibility of gases and stored kinetic energy. A pressure surge of six times the gauge pressure is possible with compressed air and much care must be taken to prevent an unsafe test condition. If an SDR 17 system was being tested at 150 psi air and a surge occurred, 900 psi is possible and damage to the system and persons around the pipe would happen. Additionally, HDPE is not OSHA approved for compressed air service and can only be used in very specific applications. For these reasons we recommend a very low pressure air test for the

containment annular space. (And for many gravity system carrier pipes.)

A.1. Air Testing Acceptability - Why is a low pressure air test acceptable? A low pressure test does not give a real indication of the tensile strength of the containment weld. In the patented Fluid-Lok™ system the welding procedure allows us to perform both pipe welds simultaneously with a high degree of confidence. This affects the testing logic of our system in a very positive way. (For a complete description of the Fluid-Lok™ Simultaneous Butt Fusion Welding Procedure, please contact Fluid Controls' Dual Contained Products Manager.) In our welding procedure the containment acts as a "guide" for the carrier piping weld, making the carrier piping hydrostatic test a strong indicator of the strength of the containment weld. By using a low pressure air test we are not testing the strength of the containment weld, (the carrier hydrostatic test accomplishes this) we are checking the integrity of the entire containment system.

A.2 Special Containment Fittings - Access ports and low point drains for the containment piping are important fittings that do not occur in single wall piping systems. These fittings greatly facilitate the testing and are in many systems the only way to test the annular space. They should be included in any dual containment piping system for many reasons, not all associated with testing. Careful thought should be given to the location of these fittings in the system.

B. Carrier Testing - There are two basic types of pipeline flows; gravity and pressure (force mains). Both systems require testing. The difference in procedures for these two HDPE systems has to do with the use of different fittings and tie-ins to structures. For example, in a gravity system often the pipe is open to a manhole, reducing the pressure capability of the system. Fittings are another limiting factor in gravity (and pressure) systems. In gravity systems, the use of wyes, crosses, wye crosses and other fabricated structures limit the pressure capability of the system. In any HDPE piping system the pressure rating of the system is only as high as the lowest rated component in the system.

B.1 Gravity - In gravity systems, the carrier testing is usually accomplished by using a low pressure test consisting of a column of water providing a liquid head pressure in the system or a low pressure air test. This accommodates the use of many traditional gravity profile fittings such as wyes, crosses, etc.

B.2 Force Main - Pressure systems can be tested at higher pressures than the actual working pressure of the system. Normal HDPE pressure test guidelines are for a test of 1.5 times the rated pressure of the piping. In the example of an SDR 11 pipe that is rated at 160 psi, the pressure test can be as high as 240 psi (at ambient temperature). However, the same constraint applies in regard to system components as applies to gravity systems. The pressure rating of the system is only as high as the lowest rated component in the system. As an example, in the case of wyes specced into a pressure system, the system rating will be drastically reduced by using this gravity profile fitting.

B.3 Fittings - A word about fittings: molded fittings versus fabricated fittings. Some competing systems claim that molded fittings are "superior" to fabricated fittings, implying a lack of quality or an inherent weakness. Fabricated fittings are just as strong as molded fittings when properly made. Some require pressure derating, some do not. Fittings that are fabricated from saddle fusion fittings with saddle-fusion welding have the same pressure as comparable molded fittings. In the case of a mitered fabricated fitting that requires derating, this is not because of an inherent weakness. The pipe's cross sectional area at the miter is greater than the pipe's diameter, this effectively increases the SDR (the ratio of the pipe's wall thickness to the cross sectional area which governs the pressure rating) of the component and thus changes, "derates", the pressure rating. The reason that molded fittings have the same pressure rating as the pipe is that the wall thickness of the fittings is greater than the pipe's, this makes up for the increased cross section at bends and other fittings, maintaining the equivalent SDR of the pipe. In a Fluid-Lok™ system, we will provide the most cost effective fitting that meets the application's needs based on accepted engineering best practices and HDPE manufacturing techniques. All US manufactures (Phillips 66 Driscopipe, Chevron Plexco, Poly-pipe, etc.) of basic HDPE single wall pipe and fittings provide many fabricated items as standard practice with wide industry acceptance. As a final note on this topic, fabricated

fittings can be provided that are fully pressure rated be simply increasing wall thickness. The reason for the need for fabricated fittings in an HDPE piping system is that many fittings that are available in other materials as molded fittings are not available in HDPE as a molded fitting, such as wyes, crosses and double wyes, just to name a few. Even systems that "trumpet" molded fittings cannot provide wyes, crosses, etc. as all molded fittings.

3. Testing Procedure Guidelines

A. General Requirements - In below ground applications, piping does not have to be completely buried to be tested but bends, reduced pressure rated fittings and components should be buried or restrained. Flange connections should be visible to check for leaks. In above ground installations, all piping should be restrained before testing.

All personnel should be aware testing is being conducted and only required personnel for the test should be in the test area for the duration of the test. *THE CONTRACTOR SHOULD BE MADE AWARE OF THE IMPORTANCE OF SAFE TESTING PROCEDURES FOR THIS MATERIAL.*

B. Carrier Piping Hydrostatic Force Main Testing - Driscopipe HDPE can withstand 2.5 times the rated pressure of HDPE piping components in pressure surge (water hammer). Hydrostatic test pressure should not exceed 1.5 times the rated operating pressure of the pipe or the lowest rated component in the system.

If we turn to the Driscopipe Systems Installation Manual, page 21, under Pressure Piping Systems, we find:

The initial pressure test shall be applied and allowed to stand without makeup pressure for a sufficient time to allow for diametric expansion or pipe stretching to stabilize. This usually occurs within 2-3 hours. After this equilibrium period, the test section can be returned to the test pressure (1.5 times rated operating pressure), the pump turned off and a final test pressure held for 1-3 hours.

Note: As an example, if SDR 11 pipe is being tested for 160 psi service, and 1.5 times the operating pressure is the desired test, then the pressure on the pipe would be 240 psi. After the initial test period, makeup water can be added to the pipe system according to the partial chart below. If there are no visual or detected leaks and there is no pressure drop during the final phase then the pipeline passes the test. If there is some small pressure drop and at the end of the test the additional water needed to bring the pipe back to a completely full condition does not exceed the chart below then the pipeline has passed to the test.

Allowance for Expansion Under Test Pressure*

Nominal Pipe Size (In.)	U.S. Gals per 100 feet of Pipe 1 - Hour Test	2 - Hour Test	3 - Hour Test
3	0.10	0.15	0.25
4	0.13	0.25	0.40
6	0.30	0.60	0.90
8	0.50	1.00	1.50
10	0.75	1.3	2.1
12	1.1	2.3	3.4

*See Driscopipe Systems Installation Manual page 21, Chart 7 for all available sizes

In addition to the pressure test, the leak detection ports and/or the low point drains should be checked for leakage. If no water is found in the leak detection port and the test pressure is attained and no more addition of water than the amounts of water given in the table above to completely fill the pipe, after the test, then the pipe will have passed the required pressure test.

C. Carrier Piping Gravity System Testing - For gravity systems, a water column of 20 feet of head is acceptable. Standard gravity system head pressure testing procedures for PVC sewers will work well with an HDPE gravity system. Allow the full pipe to reach equilibrium for 1-3 hours, completely fill the pipe, then begin your test.

In addition to the pressure test, the leak detection ports shall be checked for leakage. If no water is found in the leak detection port and the test head is attained and no more water is added to completely fill the pipe after the test, then the pipe will have passed the required pressure test.

C.1. Air Testing - To use compressed air to test a gravity system, follow the guidelines below for test procedures and safe testing using air in the annular space test. Again remember that the test pressure will be set by the lowest pressure rated component in

the system. If there are any doubts in your mind about you test please call Fluid Controls, Inc. immediately.

In addition to the pressure test, the leak detection ports shall be checked for leakage. If no water is found in the leak detection port and the test pressure is attained, then the pipe will have passed the required pressure test.

D. Containment Annular Space Testing - The carrier pipe should be brought up to and held at the system test pressure while the containment piping is being tested. This prevents any possibility of damage or erroneous pressure test results from collapse of the carrier piping due to the external pressure differential.

Based on the lowest pressure rated fitting or component in the system, an air pressure of no higher than 15 psi should be used. Because of the expansive nature of air as a gas, the test period will be limited to 10 minutes. The pipe shall be brought up to test pressure and held for 15 minutes or until the pressure stabilizes. The test will begin when the pressure stabilizes and last for 10 minutes. If no significant pressure drop is noted, the pipe has passed the test. It is important to note that some systems because of the pressure constraints of fittings and other components may only be able to handle a 3 to 5 psi air test. (Please contact the Fluid-Lok® Dual Contained Products Manager or your area sales representative for the test pressure applicable for your particular system.

E. Temperature Driven Pressure Fluctuations - Remember that pressure drop during the test can occur due to temperature fluctuations as well as to pressure expansion. As the temperature increases, the gauge pressure will decrease. If their are no visual leaks or significant pressure drops during the final test period then the pipeline passes the test.

The preparations for the pressure test are usually made the day before, in the afternoon. The actual test is run the next morning with the pressure release, the de-watering and the cleanup done after lunch.

4. Cautionary Notes for Pressure Testing

A. General - Neither Driscopipe or Fluid Controls, Inc. gives any additional warranty or guarantee by publishing this information. We have attempted to provide a comprehensive overview of systems testing in HDPE dual contained Fluid-Lok® piping systems. Care should be taken be the engineer, and especially by to contractor, to assure that safe testing conditions exist on the job site before, during and after the testing.

ALWAYS use sufficient caution when releasing the test pressures. Test pressures should be released gradually.

B. Air Testing - Phillips Driscopipe does not recommend air testing of pipe at high pressures. While Driscopipe can pass air test greater the 15 psi, there is great possible danger to those conducting the test. The danger is related to the compressibility of air as a gas, see above.

We have been told that a typical water hammer surge pressure in worst case might be three times the average pressure. Thus a 160 psi test pressure on SDR 11 pipe could possibly result in a surge equal to 480 psi. Since the 1 minute burst pressure on SDR 11 Driscopipe is usually 650 to 750 psi for SDR 11 pipe, there is little danger of failure.

For air, a hammer (surge) of six times the average pressure is possible. This means that an improperly conducted air test on SDR 11 pipe requiring 160 psi air could possible see 960 psi. There is no doubt that the pipe would fail under this test condition. If someone were hurt during a high pressure air test, then FCI or Driscopipe would not be liable.

Some systems require higher test pressures. For example, some multinational waste handling companies requires a 90 psi air test on some gas (methane) gathering lines in their landfills. However, they disclaim any responsibility for a test conducted improperly and tell contractors to limit manpower near the test area. The 90 psi is on SDR 17 pipe. The burst pressure is normally 400 to 500 psi for SDR 17 pipe. With a potential surge of 540 psi, care in conducting this test is very important! For these reasons we strongly urge customers not to use high pressure air testing.

A slow fill rate is very important in conducting an air test. A surge normally occurs when air is rapidly being added to the pipe and then is suddenly turned off. Driscopipe and FCI are concerned because we have observed many tests being run

hurriedly and by untrained persons. For this reason Fluid Controls offers trained technicians and safe testing equipment as an option for the contractor.

C. Hydrostatic Testing - All free air should be removed from the pipeline. All personnel should be clear of the test area. The pipe should be restrained or covered to prevent possible violent and dangerous movement. The contractor must use sufficient care and caution during testing to prevent dangerous conditions from existing in the testing procedure. If additional information is required, pleas refer to ASME b 31.8 Appendix N for a general recommended practice and procedure for hydrostatic testing.

DRISCOPIPE®

Engineering Characteristics

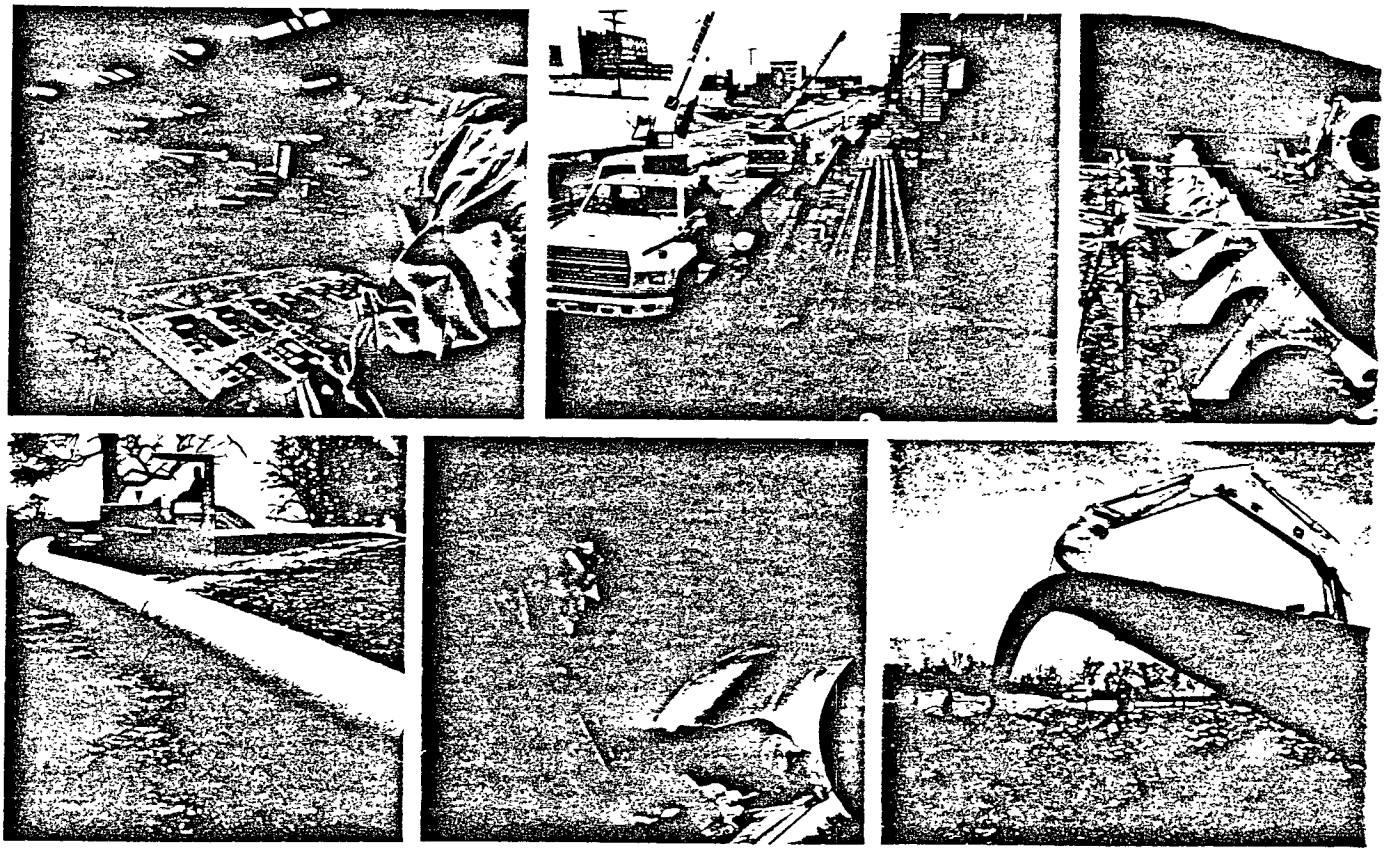

PHILLIPS 66

Contents

Introduction ... 1
Physical Properties ... 1
Long Term Strength ... 1
Design Pressure Ratings ... 3
Flow Characteristics ... 4
Lightweight & Flexible ... 4
Toughness & Ductile PE Pipe ... 5
Environmental Stress Crack Resistance ... 7
Chemical Corrosion Resistance ... 8
Temperature Characteristics ... 11
Weatherability ... 14
Permeability ... 14
Abrasion Resistance ... 15
Heat Fusion Joining Method ... 16
Fatigue Resistance ... 17

Photographs shown are typical Driscopipe installations.

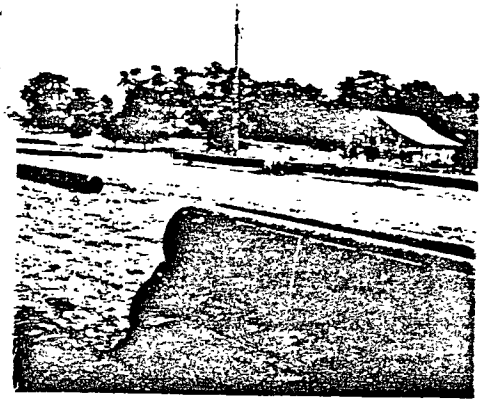

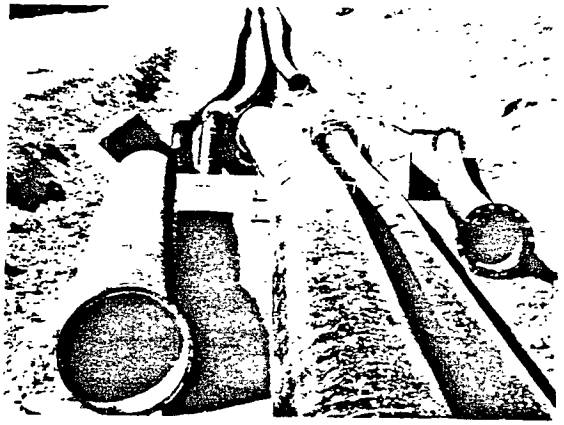

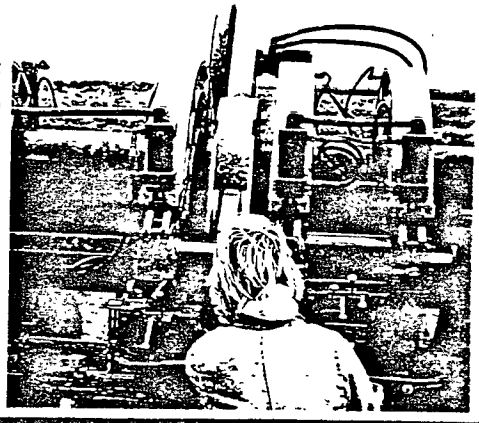
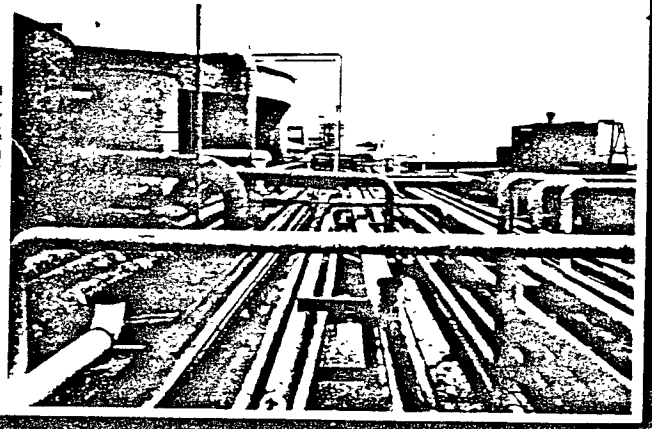

DRISCOPIPE

Driscopipe® Engineering Characteristics

Introduction

Driscopipe high density polyethylene piping systems offer the modern engineer the opportunity to take advantage of the unusual characteristics of these materials and use them to solve many old problems and to design systems for applications where traditional materials are either unsuitable or too expensive. When compared to the older traditional piping materials, Driscopipe polyethylene piping systems offer a new freedom in environmental design, extended service life, significant savings for installation labor and equipment costs, and reduced maintenance for pipeline systems where operating conditions are within the pressure and temperature capabilities of the material

This brochure outlines the Engineering Characteristics of Driscopipe high density polyethylene pipe and fittings and points out many of the advantages and benefits to be realized through the use of these systems. The discussion is directed primarily toward the large diameter (3" through 54") Driscopipe 8600 and Driscopipe 1000 Industrial and Municipal product lines However these engineering characteristics are also typical of other Driscopipe polyethylene product lines.

Physical Properties

Driscopipe 8600 is manufactured from Marlex M-8000 very high molecular weight high density PE 3408 resin. Pipe and fittings made from Marlex M-8000 are extremely tough and durable, and possess exceptional long term strength. Marlex M-8000 is a proprietary product and is extruded only by Phillips Driscopipe, Inc.

Driscopipe 1000 is manufactured from Marlex TR-480, a PE 3408 polyethylene pipe resin in a molecular weight range which permits the pipe to be extruded by conventional methods. In this respect, Driscopipe 1000 is comparable to other extra high molecular weight, high density, PE 3408 polyethylene pipes commercially available in North America.

Sheets detailing typical physical properties for Driscopipe 1000 and Driscopipe 8600 are available upon request.

Long Term Hydrostatic Strength

One of the outstanding engineering characteristics of Driscopipe high density polyethylene pipe is its long term hydrostatic strength under various thermal and environmental conditions. Life expectancy is conservatively estimated to be in excess of 50 years using the standard design basis. This strength is determined by standardized methods and procedures which the plastic pipe industry has used for many years to evaluate the long term strength of all types of plastic pipe.

Pipe hoop stress versus time to failure plots of long term hydrostatic pressure data for thermoplastic pipe have been studied and analyzed for many years The mathematical equations used to evaluate the test data and extrapolate values to longer periods of time were chosen after careful evaluation of more than 1,000 sets of long term test data representing more than 400 plastic pipe compounds Continued testing on new compounds and extended testing of older compounds have proven the validity of these test methods. Actual data from more than 11½ years (100,000 hours) of continuous testing shows the industry methods to be slightly conservative in that actual values are slightly higher than those calculated by the industry-accepted ASTM method.

The reduction in strength which occurs with time as indicated by the stress-life curves, does not represent a strength degradation of the material but is more in the nature of a relaxation effect. Plastic pipe samples which have been on test for periods up to 70,000 hours have been de-pressurized and checked for permanent reduction of strength by using the quick-burst test. No loss has been found when compared to samples previously quick-burst from the same test lot.

All evidence confirms that the methods used to predict the long term strength of plastic pipe are sound methods. Through the years, these policies and procedures, used to develop recommended hydrostatic design strengths, have influenced manufacturers to research and develop improved piping products such as Driscopipe 8600 and Driscopipe 1000.

Typical calculated long term strengths are shown below:

Long Term Strength @ 73.4°F(23°C)

Time	Hoop Stress, psi
100,000 hrs. (11.43 yrs.)	1635
438,000 hrs (50 yrs.)	1604
500,000 hrs (57 yrs.)	1601
1,000,000 hrs (114 yrs)	1586

The 114-year long term strength has been included to show more about the nature of the method used by the industry to evaluate the long term strength of plastic pipe and to illustrate the very slow reduction in strength as time progresses.

Long term hoop stresses for design purposes are normally selected at a level which is much lower than the long term strength of the materials. This ensures that the pipe is operating in a hoop stress range where creep (relaxation) of the materials is nil and assures service life in excess of 50 years. Design stress levels are discussed further in the next section

The long term hydrostatic tests are conducted by using ASTM standard test procedures which may be applied to all types of plastic pipe (ASTM D 1598 Test for Time-to-Failure of Plastic Pipe Under Constant Internal Pressure). Stress-life tests are conducted by using numerous pipe samples which are filled with water (or other environmental fluids) and subjected to a controlled pressure at a controlled temperature

Samples are held on test until they fail The pressure, temperature and time-to-failure data from all samples are used to calculate and plot stress-life curves for the particular type pipe being tested (ASTM D 2837 Obtaining Hydrostatic Design Basis for Thermoplastic Pipe Materials) This data is then used to predict the probable safe life of the pipe at various stress levels (working pressures) and various temperatures Because it is not practical to test at all temperature levels, these tests are generally conducted at temperatures of 73.4°F and one or more higher temperatures such as 100°F, 120°F and 140°F

These stress-life curves give a relationship of the expected life span of the pipe when subjected to various internal stress levels (working pressures) at various temperatures By comparing stress-life curves. one can compare relative long term performance ability of different plastic pipes Stress-life curves for Driscopipe 8600 and Driscopipe 1000 are shown in Figure 1.

Figure 1

Stress-Life of Driscopipe® 8600 and Driscopipe® 1000

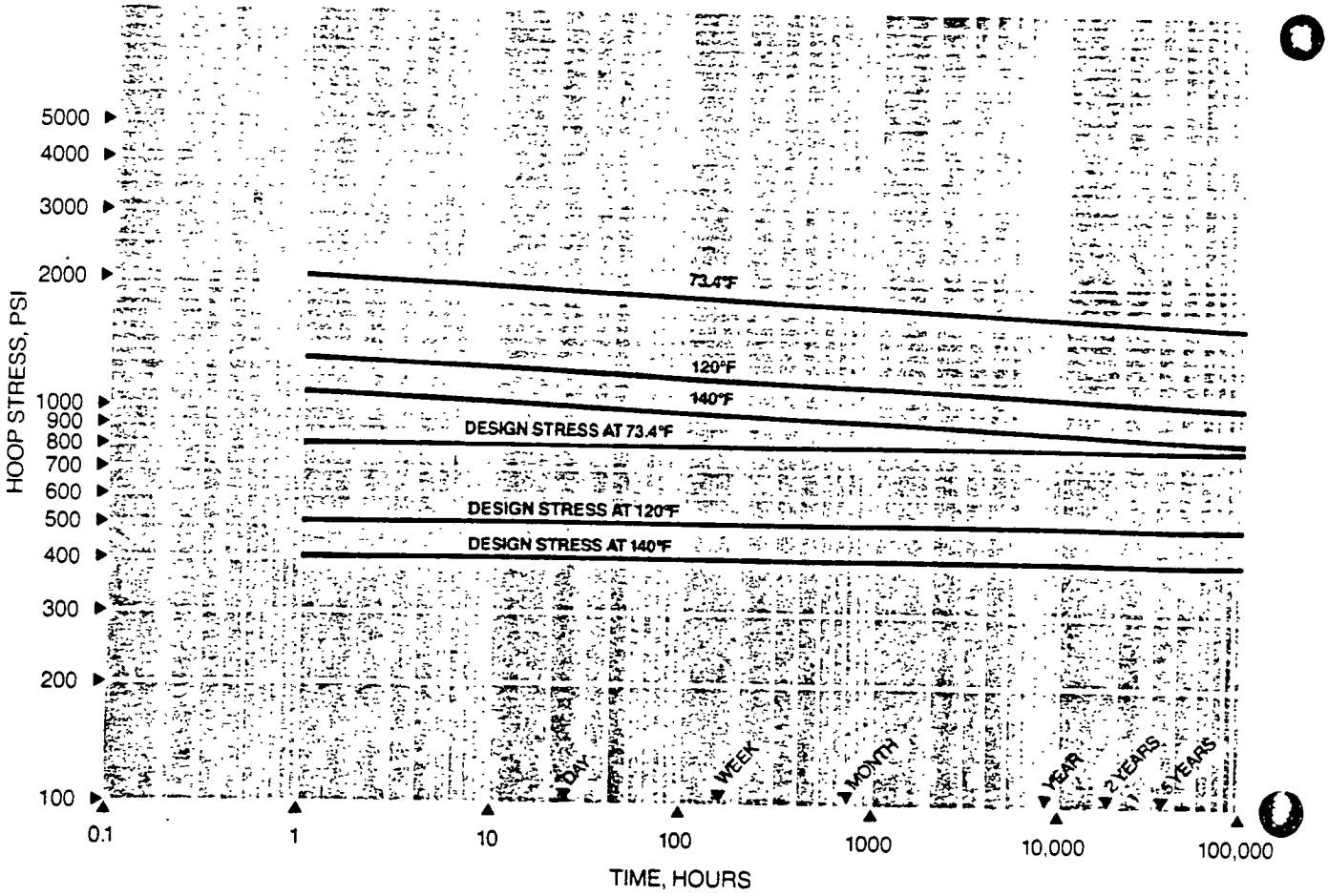

These stress-life curves were obtained using water as the test medium. However, years of laboratory testing and field experience have shown that these same curves may be used to design Driscopipe systems for natural gas, salt water, sewage and hundreds of other industrial and municipal fluids, mixtures and effluents The long term strength of Driscopipe indicated by these curves must be de-rated in some environmental circumstances, such as in the presence of liquid hydrocarbons or abrasive fluids, although the pipe is very suitable for use in these environments. An outstanding engineering advantage of Driscopipe is its exceptionally long term service life in the presence of internal and external corrosive service conditions

Design Pressure Ratings

Since plastic pipe was introduced in the late 50s, the safety factor for design of water systems at standard temperature has been 2 to 1 The 2 1 design factor which was officially adopted by the plastic pipe industry in 1963. was based on allowances for many sources of variation The guiding principle has always been to make the selection on a conservative basis but not to be unreasonably conservative

The sources of variation for which allowances are made include . variation in test methods and procedures among laboratories . variation among lots of the same compound . variation of lots of pipe from the compound in different plants and from different extruders .. variation in compounds of the same general class .. variations in handling and installation techniques .. variation in operating pressures (water hammer and surge) .. a strength-time allowance to give service life well beyond 50 years and, finally, the great unknown. Each of the factors was judged to reduce the 100,000 hour design strength by 5%-10% or 20% ... for a total of 100% ... or a design factor of 2:1. This is why polyethylene pipe, with a designated 100.000 hour strength of 1600 psi at 73.4°F, has a hydrostatic design strength of 800 psi hoop stress.

The design pressures for Driscopipe are determined by the following equation, adopted internationally by the industry for this purpose:

$$P = \frac{2S}{SDR - 1} \times F \quad \text{or} \quad P = 2S\frac{t}{D - t} \times F$$

Where:
- D = Specified Outside Diameter, Inches
- P = Design Pressure, psi
- S = Long Term Hydrostatic Strength, psi, at the design temperature
- t = Minimum Wall Thickness Inches
- F = Service Design Factor
- SDR = Standard Dimension Ratio of D/t

The traditional Service Design Factor for water at standard temperature (73.4°F) is one-half (.5) The Service Design Factor for oil or liquid hydrocarbons is 0.25 @ 73°F The service design factor may be adjusted by the design engineer to reflect the particular conditions anticipated for the application The temperature selected for design should consider both internal and external conditions. The design temperature should be based on the temperature of the pipe itself. For practical purposes, it is safer to design to the highest temperature

The design service factor for water may also be used for solutions of inorganic salts, alkaline fluids, non-oxidizing acids, low concentrations of oxidizing acids and many other solutions. See the discussion on chemical resistance for more information

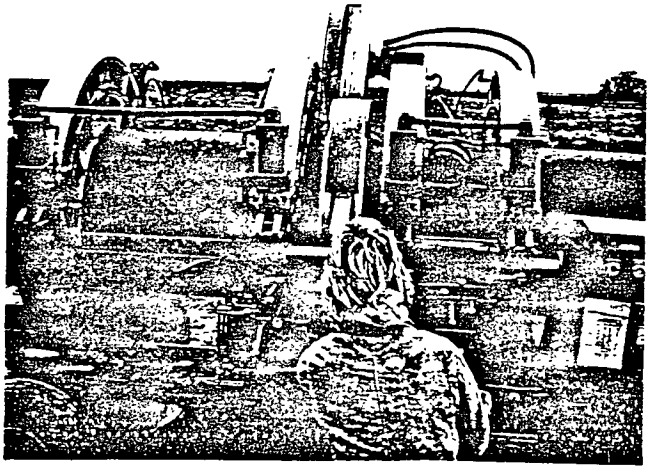

All standard design pressure ratings shown in Driscopipe literature are based on water at 73.4°F temperature; ie, a safety factor of 2.1 based on the long term hydrostatic strength of the material. Driscopipe is applicable at pressures from 0 to 265 psi and temperatures from below 32°F up to 180°F. Standard Dimension Ratios (SDR) are available from SDR 32.5 to SDR 7.0

Flow Characteristics

Driscopipe polyethylene has excellent flow characteristics as compared to traditional materials. An extremely smooth interior surface offers low resistance to flow. It maintains these excellent flow properties throughout its service life in most applications due to the inherent chemical and abrasion resistance of the material Because of smooth walls and the non-wetting characteristic of polyethylene, higher flow capacity and less friction loss is possible with Driscopipe. In many cases this higher flow capacity may permit the use of smaller pipe at a lower cost.

A "C" factor of 155 is commonly used in the Hazen-Williams formula for calculating flow in pressure applications. For gravity flow, an "n" factor of .009 is used in Manning's formula.

Experimental test data regarding pumping and pressure drop through Driscopipe is available upon request. This study compares the flow through 8" Driscopipe with and without internal fusion beads using clear water It also includes flow data for some clay-water slurries and clay-water-sand slurries. Velocities up to 20 fps are studied Data includes determination of Hazen-Williams "C" factor, Reynolds number, boundry drag, relative roughness, sand grain roughness and friction loss at various velocities.

Lightweight – Flexible

The inherent light weight and flexibility of Driscopipe provides many cost saving benefits related to handling, storage, hauling, unloading, stringing, joining and installation. Because of its light weight, Driscopipe can be moved, handled and placed in the ditch with smaller and less expensive construction equipment Usually, manpower requirements are also reduced.

Driscopipe weighs less than water, it has a specific gravity of .955-.957. Because it will float, it can be joined in long strings and easily towed into position on job sites where water is encountered. The combination of light weight and flexibility provides opportunity to fusion join the pipe in a convenient work area and pull it into position in difficult work areas where terrain or other obstacles present installation problems. The pipe can be joined above ground and rolled or lowered into the trench thus allowing the use of smaller trench widths and eliminating the necessity of placing men and equipment inside the trench Such installation methods can dramatically reduce the time required for installation in many instances

The flexibility of Driscopipe allows it to be curved over under and around obstacles and to make elevation and directional changes, thus eliminating fittings and reducing installation costs The pipe can be cold bent as it is installed to a radius of 20-40 times the pipe diameter This flexibility and the butt fusion joining method make Driscopipe ideally suited for inserting it inside older piping systems to renew and renovate such systems at a much lower cost than would be possible otherwise

Pipe flexibility and toughness also allow small diameter Driscopipe to be plowed-in or pulled-in with suitable equipment.

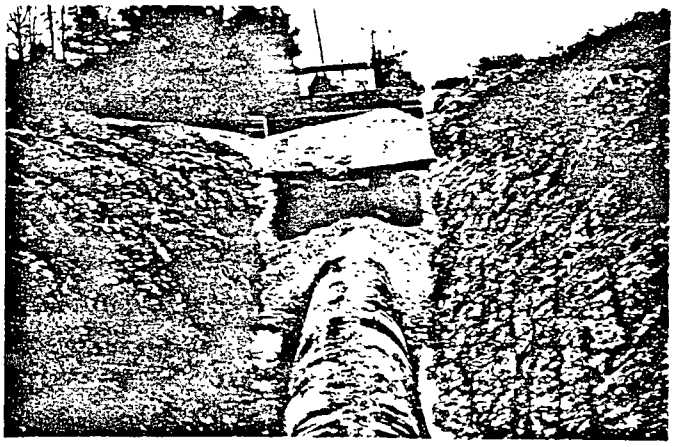

Toughness – "Ductile PE Pipe"

The overall "toughness" of Driscopipe is an important characteristic of the pipe which is derived from many of the chemical and physical properties of the material as well as the extrusion method. The pipe is ductile. It flexes, bends and absorbs impact loads over a wide temperature range of – 180°F up to +180°F. This inherent resiliency and flexibility allow the pipe to absorb surge pressures, vibration and stresses caused by soil movement. Driscopipe can be deformed without permanent damage and with no adverse effect on long term service life. It is flexible for contouring to installation conditions. The toughness of Driscopipe is one of its outstanding engineering characteristics leading to innovative piping design.

Even though "toughness" has become generally recognized by the industry as a highly desirable characteristic .. there is no standard test which can be used to directly compare the "toughness" among polyethylenes .. as well as among the different plastic materials which are considered suitable for piping

A "toughness" test has not been devised is simply because it is influenced by so many of the physical and chemical properties of the material. The extreme toughness of Driscopipe has been noted as one of its outstanding features since its introduction to the industry . yet to explain "toughness", many properties are discussed and demonstrated. To obtain a complete evaluation of the toughness of a plastic material, it is necessary to see demonstrations of tests and to conduct some tests in person in order to compare it with materials which are more familiar, such as cast iron, steel, cement, copper, etc.

Toughness is related to ... Environmental Stress Crack Resistance (ESCR) .. Notch sensitivity ... Resistance to secondary stresses from external loading ... Impact strength ... Tear strength ... Flexibility .. Kink resistance .. Abrasion and scratch resistance ... Flexural strength ... Elongation ... Chemical resistance ... Tensile strength .. Ductility ... Creep resistance ... Temperature resistance ... Density . . Molecular weight ... and the thermoplastic nature of the material. Part of the toughness of any polyethylene material can be attributed to its flexibility, flexural strength and impact resistance as compared to the more rigid thermoplastic materials such as PVC Polyethylene is ductile and will elongate many times more than PVC. Consequently, it will absorb more impact without damage or failure PE will flex or elongate and stress relieve itself rather than rupture Generally, impact strength is greater for the higher molecular weight PE resins Impact resistance is also important from the standpoint of a piping system being able to absorb energy imposed on it by external forces

The expansive force of water freezing inside Driscopipe will not damage it.

ESCR is one of the properties closely related to "toughness" and has been studied as a possible means to define and measure toughness The exceptional resistance of Driscopipe 8600 to environmental stress cracking as compared to other PE materials is discussed further in the next section

Driscopipe 8600 is unique and differs from Driscopipe 1000 and from all other polyethylene pipes. Driscopipe 8600 exhibits a superior toughness which gives the pipe the highest impact strength, highest tear strength and lowest notch sensitivity of any polyethylene pipe currently available. Driscopipe 8600 offers the highest resistance to cuts, scratches and abrasions which occur when handling and installing the pipe.

These properties are maintained throughout its temperature range without a loss of ductility or reduced resistance to notch sensitivity. Driscopipe has been successfully installed in numerous arctic applications. Some of these applications have included direct burial in the unstable arctic permafrost.

To learn more of the relative toughness of Driscopipe 8600, we encourage you to take a piece of pipe with a butt fusion joint and try to tear it up without using sharp tools. Pound it flat with a sledge hammer ... slam it against a corner of angle iron ... run over it with a truck ... then do the same with steel, copper, PVC, cast iron and the less rugged PEs It's not very scientific .. but we believe you'll be convinced that Driscopipe 8600 has extremely high toughness We have evaluated Driscopipe many times in laboratory and field test experiments to demonstrate and prove this toughness

- One excellent indicator of the relative toughness of Driscopipe 8600, as compared to other polyethylene pipe materials, can be observed in the ASTM Standard Test for determination of flow rate of the thermoplastic materials.

  When Driscopipe 8600 is heated to 190°C (374°F) to measure the flow rate, it requires 432.5 pounds/sq. in. force, applied for 10 minutes. to flow 1½ grams of 8600 material through the orifice of the test unit! Other commercially available polyethylene pipe materials will flow 10 to 20 times this amount under the same conditions

- When Driscopipe 8600 is heated to 475-500°F to melt it for fusion joining, it requires 150 pounds pressure per square inch of material to make the melted surfaces flow together. This is another indicator of toughness Other commercially available polyethylene pipe materials require about one-half that amount of pressure and some competitive pipes require less than 25 psi!

- Driscopipe 8600 has been pressure tested for long periods at temperatures up to 140°F and performance requirements at these high temperatures can be used in purchase specifications to assure that the user is getting the highest performing polyethylene pipe

Environmental Stress Crack Resistance

The most recent ASTM specification written to identify polyethylene plastic pipe and fittings materials is ASTM D 3350, "Polyethylene Plastics Pipe and Fittings Materials", adopted in 1974 This specification uses six (6) properties to classify PE material ... one of these is ESCR.

ASTM D 3350 lists three cell limits for ESCR classification which use the ESCR test outlined in ASTM D 1693, Test Method for Environmental Stress Cracking of Ethylene Plastics. The cell limits are:

Cell Classification Limit	Test Condition ASTM D 1693	Test Duration Hours	Percent of Failures Allowed	Test Temp. °C
1	A	48	50	50°
2	B	24	50	50°
3	C	192	20	100°

Minimum Notch for A is 020"; for B and C is 012". Minimum Thickness for A is .120", for B and C is .070" A and B use a diluted aqueous solution reagent, C uses full strength reagent

This method of testing for ESCR was first written in 1959 and was developed primarily to evaluate polyethylene as a jacketing material for power and communications cable. Although the method requires the use of laboratory compression molded specimens rather than pipe, it became the generally accepted method for evaluating ESCR of PE materials used for piping Its wide use was responsible for its inclusion in ASTM D 3550 to describe one of the six primary properties of a PE pipe material

The test method, ASTM D-1693, is an accelerated test method to determine the resistance of a polyethylene material to environmental stress cracking. It is a measure of the ability of the polyethylene to withstand secondary stress loadings These loadings are typically thought of as low-level, long-term, external stresses which may act upon the polyethylene pipe in field installations.

Under conditions of the test, high local multiaxial stresses are developed through the introduction of a controlled imperfection (notch). The notched sample is subjected to an elevated temperature bath of a surface active agent Environmental stress cracking has been found to occur most readily under such conditions.

A note in the test specifications states that, generally, low density (Type I) polyethylenes are tested under Condition A, medium and high density (Type II and Type III) polyethylenes are generally tested under Condition B and high density resins with high melt viscosity, such as pipe grade P34, are tested under Condition C.

As pipe grade polyethylenes have improved, the testing requirements of ASTM D-1693 have become less stringent for P34 pipe grade polyethylenes such as Driscopipe 8600 and Driscopipe 1000 As a result, a more severe stress crack resistance test has been developed to evaluate high density polyethylene pipe. The ASTM F-1248 stress crack resistance test method was developed by a gas distribution company for quality control purposes and is often referred to as Ring ESCR since it tests actual produced pipe ring samples rather than molded specimens.

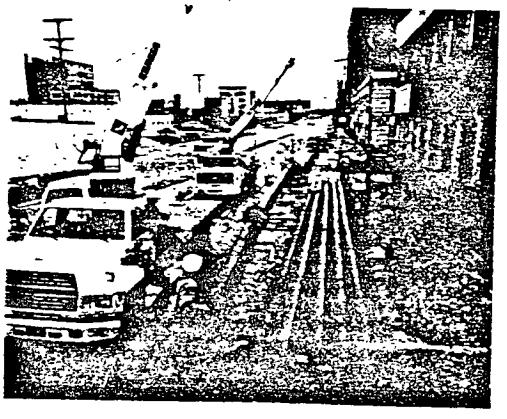

ASTM F-1248 utilizes rings cut from a pipe sample. The rings are notched on one side and compressed between parallel plates until the distance between the plates is three times the specified pipe minimum wall thickness. The compressed ring samples are subjected to an elevated temperature bath of a surface active agent and visibly inspected for crack formation or propagation.

The Ring ESCR test provides useful information regarding the different polyethylene pipe grade materials. Driscopipe 8600 shows no tendency for sample failures when tested in excess of 10,000 hours. This further reinforces the unique ability of Driscopipe 8600 to provide the highest degree of resistance to the external stresses inherent to a pipeline installation.

Driscopipe 1000, an extra high molecular weight HDPE pipe, will exhibit a ring ESCR of $F_{50} > 1000$ hours. Other lower molecular weight pipes may exhibit lower F_{50} values.

Chemical Corrosion Resistance

The outstanding resistance of Driscopipe to attack by most chemicals makes it suitable to transport these chemicals or to be installed in an environment where these chemicals are present. Factors which determine the suitability and service life of each particular application include the specific chemical and its concentration, pressure, temperature, period of contact and service conditions which may introduce stress concentrations in the pipe or fittings.

Driscopipe is, for all practical purposes, chemically inert within its temperature use range. This advantageous engineering characteristic is one of the primary reasons for the wide use of Driscopipe in industrial applications. It does not rot, rust, pit, corrode or lose wall thickness through chemical or electrical reaction with the surrounding soil, whether acid, alkaline, wet or dry. It neither supports the growth of, nor is affected by, algae, bacteria or fungi and is resistant to marine biological attack. It contains no ingredients which make it attractive to rodents, gophers, etc.

Information relative to the resistance of Driscopipe to a wide range of chemicals is shown in the following tables. This information is based on results of immersion tests (usually 3 months) at various temperatures. Changes in tensile strength and elongation are evaluated at a rapid strain rate to emphasize any strength decay in the material.

Most acids, bases and other chemicals can be transported by Driscopipe using the same design parameters as would apply to water, natural or manufactured gas and water solutions of inorganic salts. Strong oxidizing agents such as fuming sulfuric acid may adversely affect the pipe, depending upon concentration, temperature and period of contact. In many cases, such as gravity flow waste lines, these chemicals can be handled because of dilution and intermittent flow.

Some chemicals, such as all types of liquid hydrocarbons, will mechanically absorb into the wall of the pipe and cause a reduction in hoop stress but this does not degrade the material. This effect is temporary if exposure is intermittent. Where exposure is continuous, it is necessary to derate the pressure capability of the pipe for long term service. This includes such products as gasoline, ethyl alcohol, benzene, carbon tetrachloride, crude and refined oils, etc. Where 5-100% hydrocarbon liquids are continuously present in a pressure system, a service design factor of .25 should be used to calculate design pressures instead of the service design factor of .5 used with water.

$$P = \frac{2S}{SDR - 1} \times F \quad \text{or} \quad P = 2S\frac{t}{D - t} \times F$$

Where:
- D = Outside Diameter, Inches
- P = Design Pressure, psi
- S = Long Term Hydrostatic Strength, psi, at the design temperature
- t = Minimum Wall Thickness, Inches
- F = Service Design Factor
- SDR = Standard Dimension Ratio of D/t

TTDM Leak-Det cti n and L cati n Modul

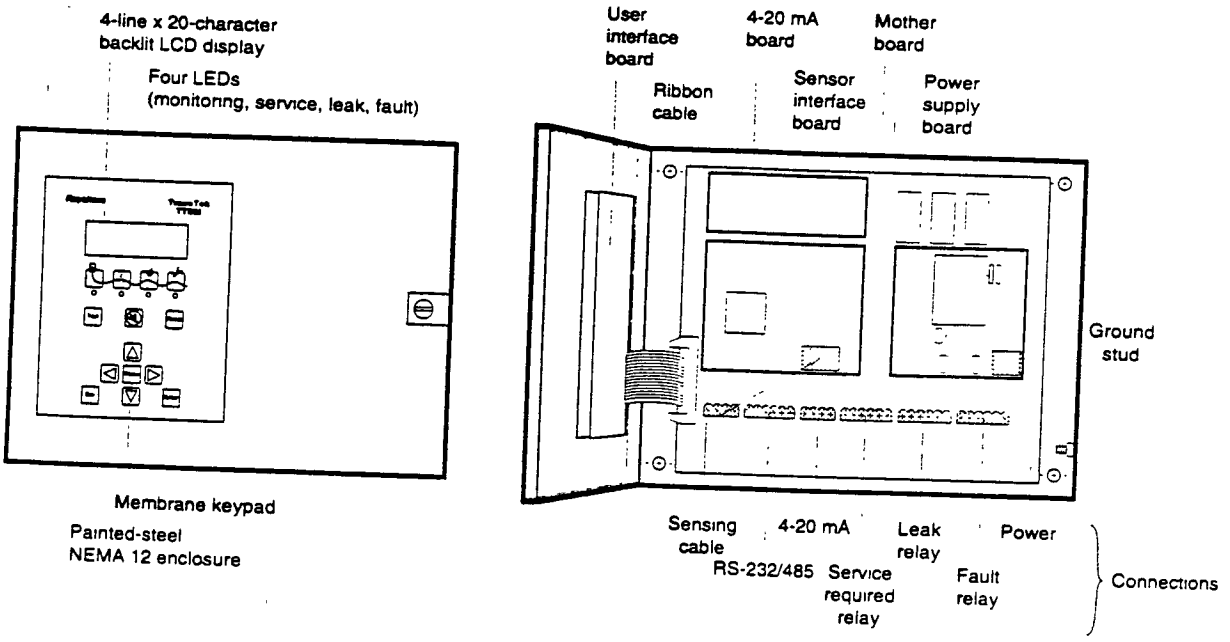

Interfaces

Relays	Number: 3 (service required, leak, fault)
	Type: DPDT
	Rating: 5 A at 250 Vac/24 Vdc
4-20 mA	Type: 4-wire connection
	Accuracy: ± 0.02 mA
Serial Port	RS-232 (3- or 5-wire connection) or RS-485 (2-wire connection)

Approvals and Certifications

The TTDM unit is approved for use in ordinary areas. The module must be located in an ordinary area, but may monitor intrinsically safe TraceTek sensing cables located in hazardous locations, as shown below.

LISTED
76LJ
SIGNAL SYSTEM UNIT

FM
Approved

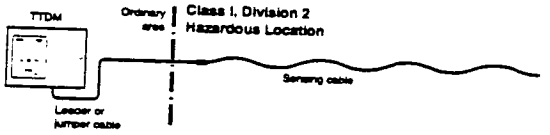

TraceTek sensing cable in Class I, Division 2, Groups A, B, C, D Hazardous Locations

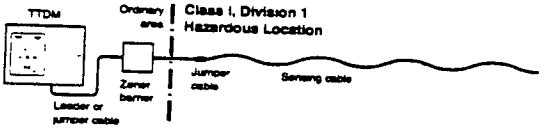

If protected by an agency-approved zener barrier, TraceTek sensing cable in Class I, Division 1, Groups A, B, C, D Hazardous Locations (Zone 0 or Zone 1 in Europe). Contact Raychem to select proper zener barrier.

The TTDM enclosure is NEMA 12, IP54.

Radio frequency

Immunity	IEC-801-2, 3, 4, 5 compliant
Emissions	FCC, Part 15, Class B EN55011-2 Class B

The TraceTek products group is a part of Raychem Chemelex Division. Chemelex Division is ISO 9001 certified.

Raychem Corporation
TraceTek Products Group
300 Constitution Drive
Menlo Park, CA 94025
Tel (800) 553-1737
Fax (415) 361-3215

All information, including illustrations, is believed to be reliable Users, however, should independently evaluate the suitability of each product for their application. Raychem makes no warranties as to the accuracy or completeness of the information, and disclaims any liability regarding its use Raychem's only obligations are those in the Raychem Standard Terms and Conditions of Sale for this product, and in no case will Raychem be liable for any incidental, indirect, or consequential damages arising from the sale, resale, use, or misuse of the product. Specifications are subject to change without notice. In addition, Raychem reserves the right to make changes—without notification to Buyer—to materials or processing that do not affect compliance with any applicable specification.

Raychem

TraceTek

TTG Alarm Module
Product Data

Raychem's multiple-channel TraceTek* alarm module (type TTG) is designed for use with all TraceTek sensing cables to detect fluid leaks. The alarm module can independently monitor up to 12 individual sensing cables. When liquid contacts a sensing cable, an alarm sounds and a light-emitting diode (LED) indicates the channel where the leak occurred.

Simple operation
The module's faceplate features three LEDs next to each channel. In the event of a leak, the alarm sounds and an LED indicates the channel with the problem. The operator silences the alarm by pressing the external "silence buzzer" button. A relay output actuates optional remote alarm devices.

Reliable performance
The LEDs on the module faceplate indicate power ("status"), leak ("alarm"), and cable break ("continuity"). Any loss of system integrity, whether caused by an interruption in power or a cut in a cable, will be acknowledged by the module panel display and relay output. External and internal test features allow the user to check module functions.

Rugged design
The metal enclosure of the TTG alarm module can be surface or flush-mounted. The module's locked enclosure restricts access by unauthorized personnel. The alarm buzzer can be silenced from the outside of the module's front panel. The 95-decibel alarm is easily heard above the operating noise of heavy equipment. The module operates from 120/240 volts AC.

UL Listed

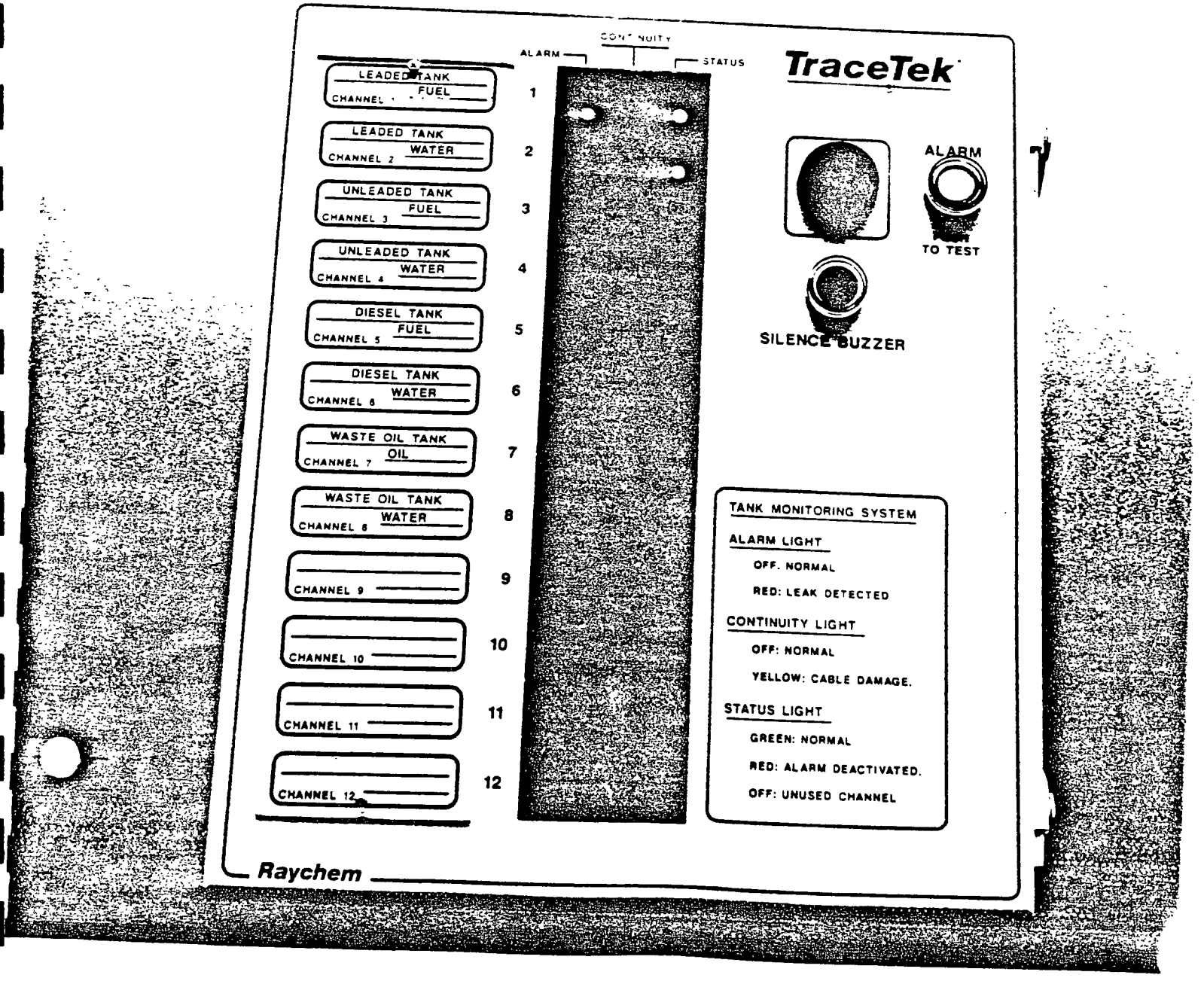

TTG Alarm M dule

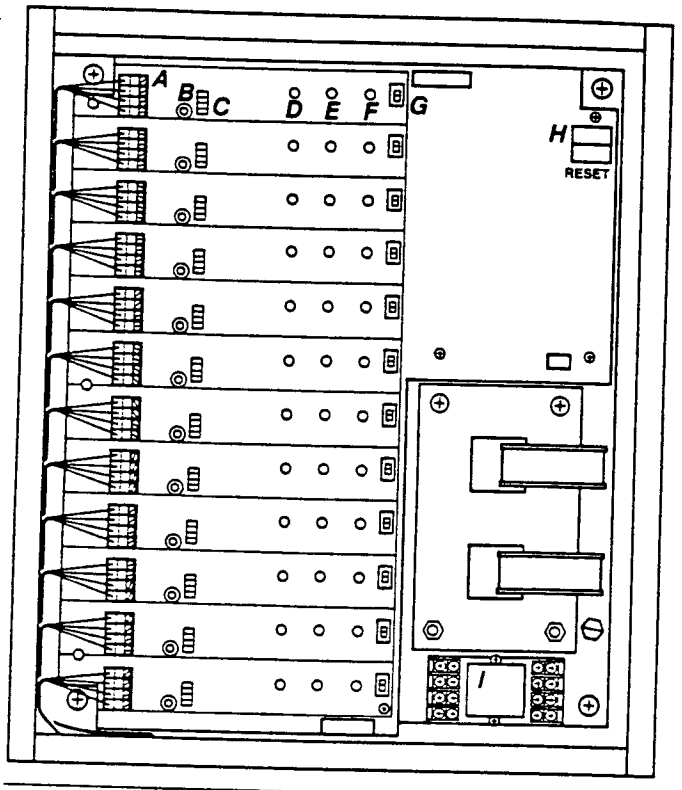

Internal module functions

A Terminal strip
Connects sensing cable to the channel.

B Test button
Initiates test of individual channel functions.

C Cable setting
Dip switch for sensing cable type.

D Alarm indicator
Red LED indicates the channel which has detected a leak.

E Continuity fault indicator
Yellow LED indicates the channel which has detected a break in a sensing cable.

F Power status indicator
LED status green indicates a powered channel.
LED status red indicates a buzzer-deactivated channel.
LED status off indicates an unused channel.

G Status switch
Activates/deactivates the channel.

H Master reset button
Resets external alarm.

I Relay contacts
Actuates optional remote alarm devices.

Technical information

Dimensions	14" high 12" wide 4" deep
With flange	17" high 15" wide 4" deep
Metal enclosure	NEMA 13
Temperature rating of module location	32° to 105°F (0° to 40°C)
Alarm buzzer	95 decibels
Supply voltage	120/240 volts AC 50/60 Hz
Relay contacts	4 Form C Activated with leak or continuity alarm. Rated at 3 amps 115 volts AC/28 volts DC

Leak Detection System UL File No. E111468
For use in Hazardous Locations
CLASS I, GROUPS ABCD, DIV 2.
With intrinsically Safe Output Circuits for
CLASS I, GROUPS ABCD, DIV 1.

Ordering information

TTG-X — TTG Alarm Module

Alarm channels
4- 4 channels
8- 8 channels
12-12 channels

Optional accessories:
TTB-FLG semi-flush mounting flange

Call us

Raychem Corporation
TraceTek® Products Group
300 Constitution Drive
Menlo Park, CA 94025-1164
(415) 361-4602
TWX 910 373 1728
TLX 348 316

All of the above information, including illustrations, is believed to be reliable. Users, however, should independently evaluate the suitability of each product for their application. Raychem makes no warranties as to the accuracy or completeness of the information, and disclaims any liability regarding its use. Raychem's only obligations are those in the standard terms and conditions of sale for this product, and in no case will Raychem be liable for any incidental, indirect, or consequential damages arising from the sale, resale, use or misuse of the product.

Raychem

TraceTek®
TTC Sensing Module with Relay Contacts

Low-cost module for integrated alarm systems

The TraceTek® TTC module provides liquid leak detection options for single TraceTek sensing cables. The TTC module is designed for integration into a variety of monitoring systems. A remote annunciation device is required. The TTC module includes three sets of relay contacts which can be used for remote annunciation and equipment control.

Versatile design
The TTC module will differentiate between two sets of signals, those caused by a leak and those caused by a break in any of the cables. Separate relay contacts allow for these conditions to be monitored independently. A third set of relay contacts also signal "Leak Detected" and can be used to provide direct control linkage to local devices. The system is not designed for constant switching applications.

The TTC module can be easily installed in any nonhazardous indoor location. Its small size allows for mounting it in or on walls, or on DIN 1 rail systems.

Simple operation
All field wiring connections are easily made to a terminal strip molded into the base piece. Sensitivity to leaks can be field adjusted.

The "Leak Detected" relay can be field adjusted for time delay. This relay can also be field set to release automatically when the cable dries, or manually by using the RESET button.

Applications
The TTC module is ideally suited for simple integration into centralized monitoring systems for computer rooms or large facilities.

Typical applications include monitoring leaks that would occur around individual air-handling units, water-cooled machinery, single tanks, pumps, sumps, or other locations where a single piece of TraceTek sensing cable is used.

UL Listed CSA® Certified

- Easily integrated
- Adjustable leak sensitivity
- Space saving
- Inexpensive

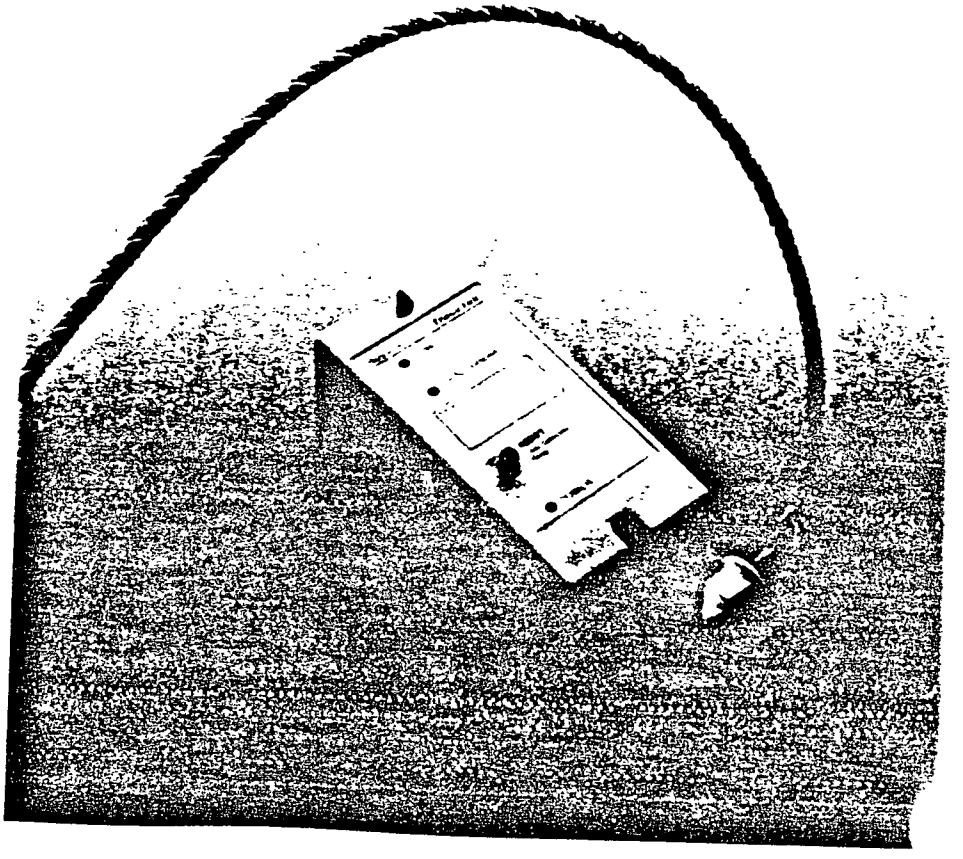

TTC Sensing Modul

Module layout

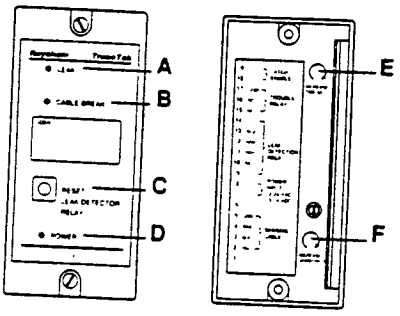

- **A** LEAK indicator (red LED) indicates system has detected a liquid leak.
- **B** CABLE BREAK indicator (yellow LED) indicates system has detected a break in the sensing cable.
- **C** RESET switch and indicator (red LED) indicate leak relay has been activated. Push to reset manually.
- **D** POWER monitor (green LED) indicates the system is on.
- **E** Adjusts time delay (0-2 minutes).
- **F** Adjusts sensitivity.

Terminal block wiring

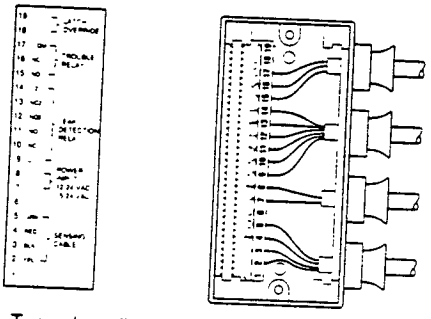

Typical configuration

18 - 19	Latch enable (Jumper enables alarm relay to latch.)*
15 - 17	Trouble relay (SPDT)
9 - 14	Leak alarm relay (DPDT)
7 - 8	Power input, 12-24 volts AC or 15-24 volts DC
6	Open (Do not use)
2 - 5	Sensing cable (2-yellow, 3-black, 4-red, 5-green)
1	Open (Do not use.)

*Note If jumper is removed leak relay automatically resets when sensing cable dries

Technical information

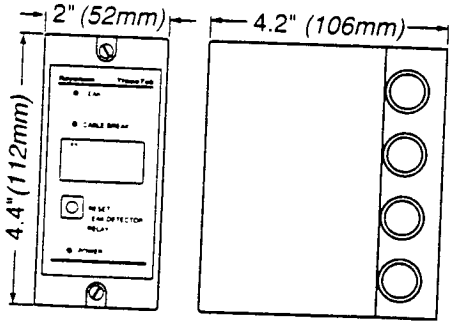

Enclosure rating:	Nema 1 / IP 20
Operating temperature range for electronics:	32°F to 122°F 0°C to 50°C
Relay types:	1 DPDT. 3 amp rating 1 SPDT normally energized. 3 amp rating
Power supply requirement (transformer not included)	12 to 24 volts AC - 250 milliamp or 15 to 24 volts DC - 150 milliamp
Weight	.77 lbs (0.35 kg)
Terminal block wiring	14 AWG (max. 2 5 mm²)
Jumper cable wiring	18 AWG (4x1 mm²)

Ordering information

Refer to TraceTek System Selection Guides for additional system requirements.

TTC-1:	TTC sensing module with relay contacts	
Sensing cable.	TT1000, 3000, 520	
Accessories:	TTE-XAL	External audible alarm
	TTC-DRC	DIN 1 rail mounting clip

Raychem Corporation
Construction Group
300 Constitution Drive
Menlo Park, CA 94025-1164
1 (800) 542-8936
Fax (415) 361-6036

Raychem Canada Ltd.
3245 American Drive
Mississauga, Ontario
L4V 1N4 Canada
1 (800) 387-3993
(416) 674-1080
Fax (416) 671-0972

All information, including illustrations, is believed to be reliable. Users, however, should independently evaluate the suitability of each product for their application. Raychem makes no warranties as to the accuracy or completeness of the information and disclaims any liability regarding its use. Raychem's only obligations are those in the Standard Terms and Conditions of Sale for this product, and in no case will Raychem be liable for any incidental, indirect, or consequential damages arising from the sale, resale, use, or misuse of this product.

Raychem

TT3000

Trac T k Sen ing Cable for Conductive Liquid

TraceTek 3000 sensing cable detects the presence of conductive liquids at any point along its length. Most acids and bases and even deionized water can be sensed and located. Installed with a TraceTek alarm and locating module, the cable senses the presence of fluid, triggers an alarm, and pinpoints the location of the first leak detected.

Distributed sensing

TraceTek 3000 sensing cable provides distributed leak detection and location over a wide range of areas. The cable is available in a variety of lengths, providing as much coverage as necessary.

Design flexibility

TraceTek 3000 sensing cable is available with preinstalled metal connectors that plug together. The measurement circuit is not dependent upon the conductivity of the leaking fluid. Therefore, the same cable will detect a range of individual fluids or multiple fluids without special design considerations or calibration.

The cable is designed for a variety of applications, including floor surfaces, subfloors, equipment locations, pipes, storage tanks, and trenches. The cable is small, lightweight, and flexible, allowing easy installation. The smooth design allows quick drying.

Advanced technology

Raychem's conductive-polymer technology and fluoropolymer construction make TraceTek 3000 sensing cable mechanically strong and chemically resistant. The cable is constructed of two sensing wires, an alarm signal wire, and a continuity wire embedded in a fluoropolymer carrier rod. This rugged construction, which exposes no metal, enables the reusable cable to withstand chemical attack in a broad range of corrosive environments.

Ordering information

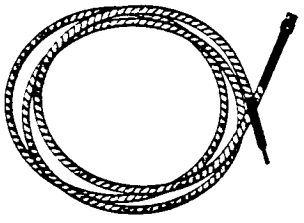

TT3000 zone sensing cable with factory-installed connector and end termination

Catalog number	Description
TT3000–Zone–MC	5-ft (1.5 m) sensing cable with preinstalled heat-shrink end termination

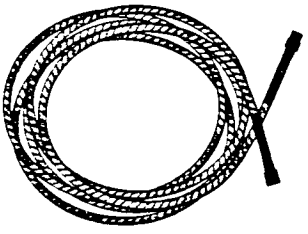

TT3000 modular sensing cables with factory-installed connectors

Catalog number	Description
TT3000–0.3M/1FT–MC	1-ft (0.3 m) sensing cable
TT3000–1M/3FT–MC	3-ft (1 m) sensing cable
TT3000–1.5M/5FT–MC	5-ft (1.5 m) sensing cable
TT3000–3M/10FT–MC	10-ft (3 m) sensing cable
TT3000–4.5M/15FT–MC	15-ft (4.5 m) sensing cable
TT3000–7.5M/25FT–MC	25-ft (7.5 m) sensing cable
TT3000–15M/50FT–MC	50-ft (15 m) sensing cable
TT3000–30M/100FT–MC	100-ft (30 m) sensing cable

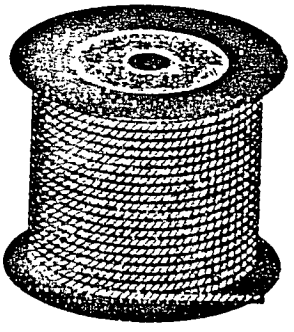

TT3000 bulk sensing cable (connectors not included)
for installation in double-containment piping

Catalog number	Description
TT3000–SC	Bulk sensing cable on reel, Minimum length: 250 ft (75 m) Maximum length: 1000 ft (300 m)
Connector kits (not shown) TT3000–CK–MC–M/F	Components for five mated pairs of connectors (includes test tools)
TT3000–CK–MC–M	One pin-type connector
TT3000–CK–MC–F	One socket-type connector

TT3000 Sen ing Cabl for C nductiv Liquid

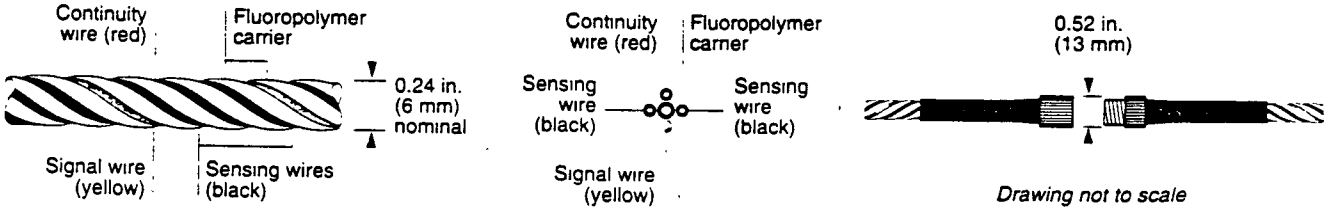

Product characteristics

Cable diameter	0.24 in. (6.0 mm) nominal
Cable diameter with connecter	0.52 in. (13 mm) nominal
Continuity and signal wires	2 x 26 AWG with insulation of fluoropolymer
Sensing wires	30 AWG with jacket of conductive fluoropolymer
Carrier	Fluoropolymer
Cable weight (50-ft length)	2.3 lb

Technical Information

Breaking strength	160 lb
Cut-through force	>50 lb with 0.005 in. blade; crosshead speed 0.2 inch/minute
Abrasion resistance	>65 cycles per UL 719, tested to functional values
Maximum continuous operating temperature	Sensing cable: 194°F (90°C) Cable connectors: 185°F (85°C)

Chemical resistance

Cable functions normally after exposure in accordance with ASTM D 543 at 77°F (25°C) for seven days:	Trichloroethylene (100%) Sulphuric acid (98%) Hydrochloric acid (37%) Hexane (100%) Methanol (100%) Sodium hydroxide (10%) Xylene (100%) Aqua regia

Note: Prolonged exposure to concentrated ketones may cause temporary reduction of sensitivity; consult factory.

Radiation resistance

Cumulative radiation exposure of 10 megarad gamma radiation over design life of 30 years

Approvals

Sensing cable may be used in Class I, Division 2, Groups A, B, C, D Hazardous Locations (Zone 2 in Europe)
If sensing cable is protected by agency-approved zener barrier, it may be used in Class I, Division 1, Groups A, B, C, D Hazardous Locations (Zone 0 or Zone 1 in Europe). Contact Raychem to select proper zener barrier.

UL LISTED · FM APPROVED · CSA

Raychem Corporation
TraceTek Products Group
300 Constitution Drive
Menlo Park, CA 94025
Tel (800) 553-1737
Fax (415) 361-3215

All information, including illustrations, is believed to be reliable. Users, however, should independently evaluate the suitability of each product for their application. Raychem makes no warranties as to the accuracy or completeness of the information, and disclaims any liability regarding its use. Raychem's only obligations are those in the Raychem Standard Terms and Conditions of Sale for this product, and in no case will Raychem be liable for any incidental, indirect, or consequential damages arising from the sale, resale, use, or misuse of the product. Specifications are subject to change without notice. In addition, Raychem reserves the right to make changes—without notification to Buyer—to materials or processing that do not affect compliance with any applicable specification.

Raychem

TT5000

TraceT k Fuel-S n ing Cable

TraceTek 5000 sensing cable detects the presence of liquid hydrocarbon fuels at any point along its length, yet does not react to the presence of water. Installed with a TraceTek alarm and locating module, the cable senses the liquid, triggers an alarm, and pinpoints the location of the leak.

Distributed sensing

TraceTek 5000 sensing cable provides distributed leak detection and location for a wide range of applications. The cable is available in a variety of lengths, providing as much coverage as necessary.

Design flexibility

TraceTek 5000 sensing cable is available in bulk reels, with connector kits or with factory-installed connectors that plug together. The cable is designed for a variety of double-containment applications, including tanks, trenches, and piping. (See the "TraceTek Double-Containment Design Guide" for specific design alternatives.)

Advanced technology

Raychem's radiation-crosslinking and conductive-polymer technologies are used to make TraceTek 5000 sensing cable mechanically strong and chemically resistant. The core of the cable is constructed of two sensing wires, an alarm signal wire, and a continuity wire. The core is encased in a conductive-polymer jacket and surrounded with a fluoropolymer braid. This rugged construction allows the cable to perform well, even in the most demanding environments.

Ordering information

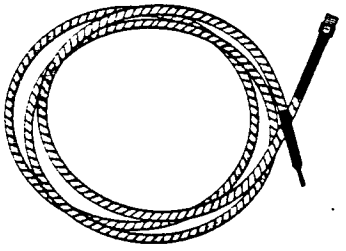

TT5000 zone sensing cable with factory-installed connector and end termination

Catalog number	Description
TT5000–Zone–MC	5-ft (1.5 m) sensing cable with heat-shrink end termination.

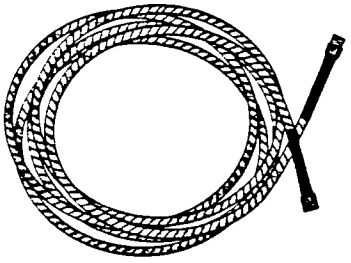

TT5000 modular sensing cables with factory-installed connectors

Catalog number	Description
TT5000-0.3M/1FT-MC	1-ft (0.3 m) sensing cable
TT5000-1.5M/5FT-MC	5-ft (1.5 m) sensing cable
TT5000-3M/10FT-MC	10-ft (3 m) sensing cable
TT5000-4.5M/15FT-MC	15-ft (4.5 m) sensing cable
TT5000-7.5M/25FT-MC	25-ft (7.5 m) sensing cable
TT5000-15M/50FT-MC	50-ft (15 m) sensing cable
TT5000-30M/100FT-MC	100-ft (30 m) sensing cable

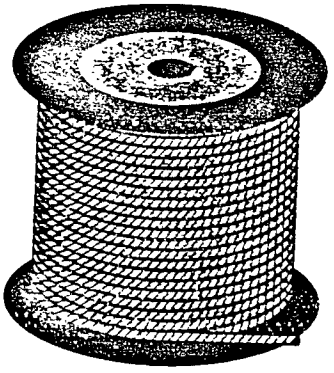

TT5000 bulk sensing cable (connectors not included)
for installation in double-containment piping

Catalog number	Description
TT5000–SC	Bulk sensing cable on reel Minimum length: 100 ft (30 m) Maximum length: 800 ft (240 m)
Connector kits (not shown): TT5000–CK–MC–M/F	Components for five mated pairs of connectors (includes test tools) One pin-type connector One socket-type connector
TT5000–CK–MC–M	
TT5000–CK–MC–F	

TT5000 Fu l-Sen ing Cabl

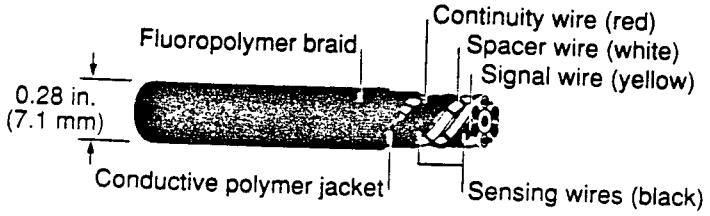

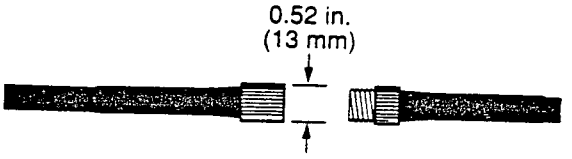

Drawing not to scale

Product characteristics

Cable diameter	0.28 in. (7.1 mm) nominal
Cable diameter with connector	0.52 in. (13 mm) nominal
Cable weight (50-ft length)	2.4 lb
Operating temperature range	–20°C to 60°C (–4°F to 140°F)
Pull force limit	Not to exceed 50 lb
Bend radius	2 in. (50 mm) minimum
Pressure	Loads greater than 20 lb (9 kg) per linear inch at 20°C (68°F) may immediately trigger an alarm.
Nonresettable	Must be replaced after exposure to hydrocarbon liquids.

Chemical resistance

Cable functions normally after exposure in accordance with ASTM D 543 at 23°C (73°F) for seven days:	Sulfuric acid (10%) Hydrochloric acid (10%) Nitric acid (10%) Sodium hydroxide (10%)

Water resistance

Sensing cable	Less than 10-μA leakage when immersed in salt water for 90 days.
Connector system	Less than 10-μA leakage when immersed in water at 10 psig for 24 hours.

Response time

Representative materials detected:	Typical response time at 20°C (68°F):
Gasoline	12 minutes
#1 diesel fuel	60 minutes
#2 diesel fuel	120 minutes
JP5 jet fuel	70 minutes
JP8 jet fuel	50 minutes
Jet-A jet fuel	50 minutes
Xylene	20 minutes

Notes:
- Response Time Test Method: "Test Procedures for Third Party Evaluation of Leak Detection Methods: Cable Sensor Liquid Contact Leak Detection Systems."
- Response times are affected by operating temperature. Consult factory for specific response times at other temperatures and in other liquids.

Approvals

Sensing cable may be used in Class I, Division 2, Groups A, B, C, D Hazardous Locations (Zone 2 in Europe). If sensing cable is protected by agency-approved zener barrier, it may be used in Class I, Division 1, Groups A, B, C, D Hazardous Locations (Zone 0 or Zone 1 in Europe). Contact Raychem to select proper zener barrier.

UL LISTED · FM APPROVED · CSA

Raychem Corporation
TraceTek Products Group
300 Constitution Drive
Menlo Park, CA 94025
Tel (800) 553-1737
Fax (415) 361-3215

All information, including illustrations, is believed to be reliable. Users, however, should independently evaluate the suitability of each product for their application. Raychem makes no warranties as to the accuracy or completeness of the information, and disclaims any liability regarding its use. Raychem's only obligations are those in the Raychem Standard Terms and Conditions of Sale for this product, and in no case will Raychem be liable for any incidental, indirect, or consequential damages arising from the sale, resale, use, or misuse of the product. Specifications are subject to change without notice. In addition, Raychem reserves the right to make changes—without notification to Buyer—to materials or processing that do not affect compliance with any applicable specification.

Raychem

TT5001

TraceTek Solvent-Sensing Cabl

TraceTek TT5001 sensing cable detects liquid organic solvents anywhere along its length, but does not react to the presence of water. Installed with a TraceTek alarm and locating module, the cable senses the liquid, triggers an alarm, and pinpoints the location of the leak.

Distributed sensing

TraceTek TT5001 sensing cable provides distributed leak detection and location for a wide range of applications. Cable lengths can be arranged to provide as much coverage as necessary.

Design flexibility

The TT5001 sensing cable is available in a variety of lengths with factory-installed connectors. These modular sensing cables may be connected in series to provide distributed monitoring for trenches, subfloors, and double-containment piping, or used individually for double-containment tanks, sumps, and small areas. TT5001 zone sensing cable—which comes with a factory-installed heat-shrink end termination—is also available for small area coverage.

Advanced technology

Raychem's radiation-crosslinking and conductive-polymer technologies are used to make TraceTek TT5001 sensing cable mechanically strong and chemically resistant. The core of the cable is constructed of two sensing wires, an alarm signal wire, and a continuity wire. The core is encased in a conductive-polymer jacket and surrounded with a fluoropolymer braid. This rugged construction allows the cable to perform well, even in demanding environments.

Ordering information

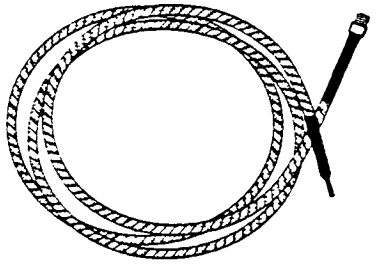

TT5001 zone sensing cable with factory-installed connector and end termination

Catalog number	Description
TT5001–Zone–MC	5-ft (1.5 m) sensing cable with heat-shrink end termination.

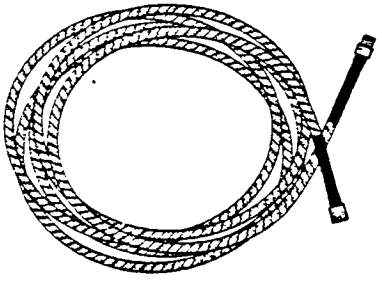

TT5001 modular sensing cable with factory-installed connectors

Catalog number	Description
TT5001-0.3M/1FT-MC	1-ft (0.3 m) sensing cable
TT5001-1.5M/5FT-MC	5-ft (1.5 m) sensing cable
TT5001-3M/10FT-MC	10-ft (3 m) sensing cable
TT5001-7.5M/25FT-MC	25-ft (7.5 m) sensing cable
TT5001-15M/50FT-MC	50-ft (15 m) sensing cable

Solvent-Sensing Cable

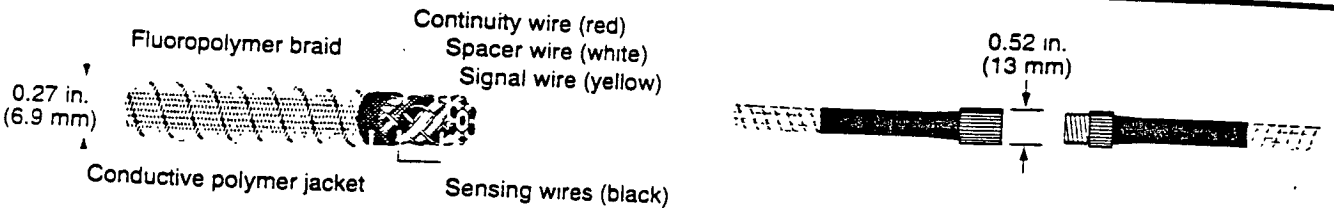

Drawing not to scale

Product characteristics

Cable diameter	0.27 in. (6.9 mm) nominal
Cable connector diameter	0.52 in. (13 mm) nominal
Cable weight (50-ft length)	2.4 lb
Operating temperature range	−20°C to 60°C (−4°F to 140°F)
Pull force limit	Not to exceed 50 lb (23 kg)
Bend radius	2 in. (50 mm) minimum
Pressure	Loads greater than 20 lb (9 kg) per linear inch at 20°C (68°F) may immediately trigger an alarm.
Nonresettable	Must be replaced after exposure to solvents.

Chemical resistance

Cable functions normally after exposure in accordance with ASTM D 543 at 23°C (73°F) for seven days:	Sulfuric acid (10%) Nitric acid (10%) Hydrochloric acid (10%) Sodium hydroxide (10%)

Water resistance

Sensing cable	Less than 10-µA leakage when immersed in salt water for 90 days.
Connector system	Less than 10-µA leakage when immersed in water at 10 psig for 24 hours.

Response time

Representative materials detected:	Typical response time at 20°C (68°F):
Toluene	10 min.
Dichloromethane (methylene chloride)	5 min.
1, 1, 1-trichloroethylene (TCE)	8 min.
Trichloroethane (TCA)	20 min.
Methyl ethyl ketone (MEK)†	10 min.†
Acetone†	10 min.†
n-methyl pyrrolidone (NMP)†	60 min.†
Isopropyl alcohol (anhydrous)	90 min.

Notes:
- Response times are based on 2 inches of cable immersed in liquid.
- Response times are affected by operating temperature. Consult factory for specific response times at other temperatures and in other liquids.

† Prolonged immersion in ketones will inhibit sensing-cable performance.

Approvals pending

Underwriters Laboratories
C-UL (certified to Canadian standards)
Factory Mutual

ISO 9001

The TraceTek products group is a part of Raychem Chemelex Division. Chemelex Division is ISO 9001 certified.

Raychem Corporation
TraceTek Products Group
300 Constitution Drive
Menlo Park, CA 94025
Tel (800) 553-1737
Fax (415) 361-3215

All information, including illustrations, is believed to be reliable. Users, however, should independently evaluate the suitability of each product for their application. Raychem makes no warranties as to the accuracy or completeness of the information, and disclaims any liability regarding its use. Raychem's only obligations are those in the Raychem Standard Terms and Conditions of Sale for this product, and in no case will Raychem be liable for any incidental, indirect, or consequential damages arising from the sale, resale, use, or misuse of the product. Specifications are subject to change without notice. In addition, Raychem reserves the right to make changes—without notification to Buyer—to materials or processing that do not affect compliance with any applicable specification.

© 1995 Raychem Corporation Printed in USA H55473 5/96 TraceTek is a trademark of Raychem Corporation

CORROSION-RESISTANT THERMOPLASTIC VALVES

ASAHI/AMERIC

CORROSION RESISTANT THERMOPLASTIC VALVES

Contents

Contents, Discussion 1
Duo-Bloc Ball Valve, Omni Ball Valve 2
3-Way Ball Valve, Electromni Ball Valve 3
Labcock Valves, Sediment Strainers, Gaskets 4
Quarter Master Electric Actuator, True Union Ball Check Valve 5
Swing Check Valve, Omni Butterfly Valve 6
Type 75 Butterfly Valve 7
Damper Style Butterfly Valve 8
Type 77Z Butterfly Valve, Duble Union Expansion Joints 9
Diaphragm Valve 10
Gate Valve, Globe Valve 11
Globe Control Valve 12
Actuators 13
Other Products and Accessories 14

Discussion

For over 20 years Asahi/America has been at the forefront of thermoplastic valve technology. The Asahi/America line is now the broadest in the industry in terms of size, range, valve types, materials, features and options. Advanced molding techniques, rigid engineering standards, and a wide choice of corrosion resistant thermoplastic and elastomeric materials ensure the highest level of reliability for all Asahi/America valves. This holds true even in the most severe corrosive applications involving chemicals such as sulfuric and hydrofluoric acids, nitric acid, and other oxidizing chemicals, as well as caustics, solvents, halogens, and other problem materials.

We also pride ourselves in providing the industry's broadest program of quality control, technical support, service and specialty fabrications. Designing a system made of plastic materials differs considerably from that of metal. No one understands this better than Asahi/America's sales consultants and technical staff. We provide extensive technical assistance; training through seminars, demonstrations and on-site field assistance; special testing to meet specific design or performance criteria; custom-engineered parts for special need situations; and advice on any aspect of your piping project.

Warranty and Liabilities

To the best of our knowledge the information contained herein is accurate. However, neither Asahi/America, Inc., nor any of its affiliates assumes any liability whatsoever for the accuracy or completeness of the information contained herein. Final determination of the suitability of any information or material for the use contemplated, or the manner of use, is the sole responsibility of the user.

Due to our policy of continuous product improvement, we reserve the right to change or modify design without incurring any obligation to furnish or install such changes or modifications on products previously or subsequently sold.

Not

Caution: Asahi/America valves are not recommended for use in compressed gas services. When testing, only hydrostatic pressure testing is recommended, with a gradual increase in pressure.

DUO-BLOC® BALL VALVE

• Blocks in two directions • True Union design • PVC and CPVC models (1/2"-2") feature one-piece capsule guaranteed for 2 years and two sets of end connectors (socket and threaded) • 3" and 4" PVC and CPVC valves feature threaded-in carriers • All sizes rated for full vacuum service

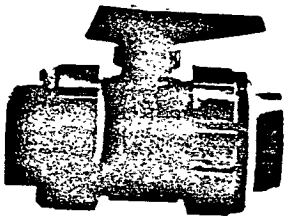

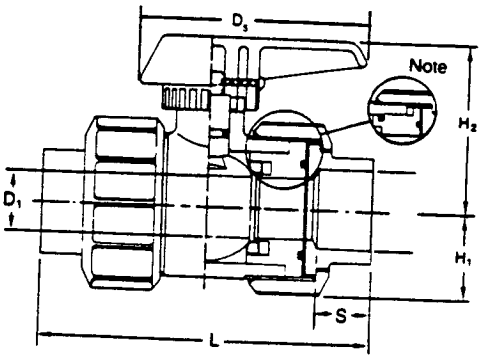

FLANGED MODEL

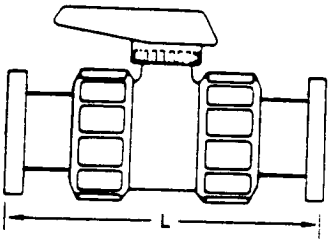

SPECIFICATIONS

SIZES. 1/2"–4"
MODELS Socket, Threaded, Butt (PP, PVDF only), Flanged (ANSI)
BODIES. PVC, CPVC, PP, PVDF
SEATS. Teflon backed with EPDM or VITON
SEALS: EPDM or VITON

PRESSURE VS. TEMPERATURE (PSI, WATER, NON-SHOCK)

Size (Inches)	PVC 30°F 120°F	CPVC 30°F 120°F	CPVC 140°F	CPVC 175°F	CPVC 195°F	PP -5°F 85°F	PP 140°F	PP 175°F	PVDF 140°F	PVDF 175°F	PVDF 195°F	PVDF 210°F
1/2–2"	150	150	120	85	55	70	60	40	150	120	110	85
2 1/2–4"	150	150	120	85	55	70	60	40	150	120	110	85

DIMENSIONS (IN INCHES UNLESS OTHERWISE NOTED.)

Size	Weight Socket/ Threaded (lbs.)	Weight Flanged (lbs.)	D_1	PVC, CPVC D_2 Socket*	D_2 Threaded	PVC, CPVC S Socket*	L Butt Fusion	L Socket	L Threaded	L Flanged PVC/ CPVC/ PP/PVDF	D_3	H_2	H_1	C_v Values Gal./Min. @ 1 PSI Pressure Drop
1/2"	0.38	2.00	0.59	0.85	NPT 1/2	0.69	4.57	3.86	3.82	5.63	2.76	1.97	.95	12.0
3/4"	0.67	2.25	0.79	1.06	NPT 3/4	0.72	5.00	4.53	4.65	6.77	3.54	2.24	1.19	30.0
1"	1.00	2.50	0.98	1.33	NPT 1	0.87	5.35	5.28	5.35	7.36	3.94	2.64	1.38	47.0
1 1/4"	1.39	3.25	1.22	1.67	NPT 1 1/4	0.94	6.00	5.83	5.87	7.48	4.13	3.07	1.57	80.0
1 1/2"	2.18	4.00	1.57	1.91	NPT 1 1/2	1.09	6.29	6.65	6.69	8.35	4.53	3.35	1.87	140.0
2"	2.93	4.75	2.01	2.39	NPT 2	1.16	7.04	7.56	7.76	9.21	5.12	3.74	2.09	190.0
2 1/2"	4.86	8.50	2.28	2.89	NPT 2 1/2	1.75	9.70	9.45	8.46	10.20	5.91	4.45	2.62	320.0
3"	8.07	13.00	2.76	3.52	NPT 3	1.87	11.63	11.10	10.39	11.97	8.66	5.12	2.99	430.0
4"	21.00	33.00	3.54	4.52	NPT 4	2.00	14.85	13.90	14.17	14.65	11.02	6.54	4.13	720.0

*Consult factory for socket dimensions PP and PVDF

OMNI® BALL VALVE

• Blocks in two directions • Compact, uni-body construction • An economical valve for water, saltwater, and mild chemicals • Ideal for home, farm, or industry • Rated for full vacuum service

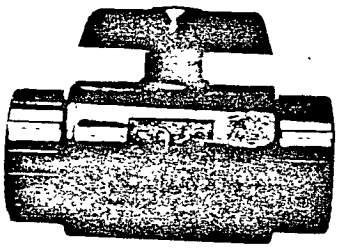

SPECIFICATIONS

SIZES: 3/8"–3"
MODELS. Socket, Threaded, Flanged (ANSI)
BODIES: PVC, CPVC
SEATS: Teflon backed with EPDM
SEALS: EPDM

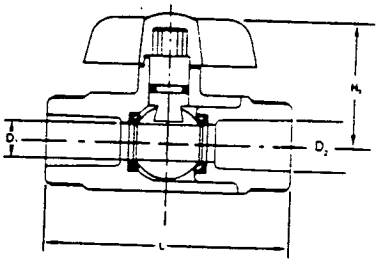

PRESSURE VS. TEMPERATURE (PSI WATER, NON-SHOCK)

Size	PVC 30°F 120°F	CPVC 30°F 120°F	CPVC 140°F	CPVC 175°F	CPVC 195°F
3/8–3"	150	150	120	85	55

DIMENSIONS (IN INCHES UNLESS OTHERWISE NOTED.)

Size	Weight (lbs.)	D_1	D_2 Socket	D_2 Threaded	L	A	H_2	C_v VALUES Gal./Min. @ 1 PSI Pressure Drop
3/8"	0.22	0.38	0.69	NPT 3/8	3.35	2.36	1.65	10.0
1/2"	0.22	0.51	0.85	NPT 1/2	3.35	2.36	1.65	12.0
3/4"	0.44	0.79	1.06	NPT 3/4	4.02	3.15	2.17	30.0
1"	0.69	1.00	1.33	NPT 1	4.49	3.15	2.36	47.0
1 1/4"	.90	1.22	1.67	NPT 1 1/4	5.00	3.74	2.76	80.0
1 1/2"	1.19	1.40	1.91	NPT 1 1/2	5.98	4.33	2.99	140.0
2"	1.86	1.80	2.39	NPT 2	6.93	4.33	3.31	190.0
3"	6.30	2.76	3.52	NPT 3	9.29	7.87	4.88	430.0

3-WAY (MULTIPORT) BALL VALVE

• Eliminates need for additional ball valve and Tee • True Union left and right ports • Permits flow from common port to left or right ports or to "off" position • "L" port standard • Tee or Double "L" porting optional • Available with electric or pneumatic actuators • Rated for full vacuum service

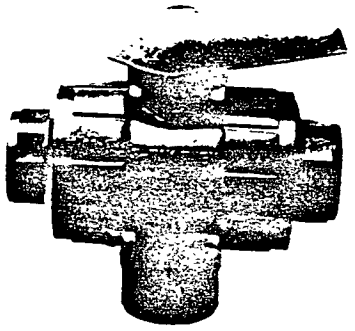

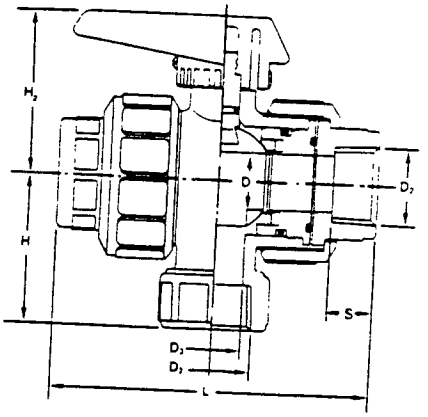

SPECIFICATIONS

SIZES. ½"–4"*
MODELS Threaded, Socket, Flanged (ANSI), Butt (PP and PVDF only)
BODIES PVC, CPVC, PP, PVDF
SEATS Teflon® backed with EPDM or VITON®
SEALS EPDM or VITON®
* 4" valve is a fabricated model
Consult factory for dimensions

PRESSURE VS. TEMPERATURE (PSI WATER NON-SHOCK)

Size	PVC	CPVC				PP			PVDF			
	30°F 120°F	30°F 120°F	140°F	175°F	195°F	-5°F 85°F	140°F	175°F	-5°F 140°F	175°F	195°F	210°F
½–2"	150	150	120	85	55	150	85	60	150	120	110	85
3–4"	150	150	120	85	55	150	70	40	150	120	110	85

DIMENSIONS (IN INCHES)

Size	Weight (lbs.)	S Threaded/ Socket	L Threaded/ Socket	L Butt Fusion	L Flanged PVC/ CPVC/ PP/PVDF	H_2 Threaded and Socket	H_1 Threaded/ Socket	H_1 Flanged PVC/ CPVC	H_1 Flanged PP/ PVDF	D_2 NPT	D_2 PVC/CPVC Socket	D_3	D	C. Values Gal./Min. @ 1 PSI Pressure Drop
½"	0.41	0.69	3.82	4.57	5.63	1.97	1.77	2.77	2.65	½"	85	59	59	9
¾"	0.72	0.72	4.65	5.00	6.77	2.24	2.17	3.28	3.29	¾"	1.06	79	79	21
1"	1.13	0.88	5.35	5.35	7.36	2.64	2.60	4.09	3.64	1"	1.33	98	98	33
1½"	2.43	1.09	6.69	6.29	8.35	3.35	3.86	5.54	4.71	1½"	1.91	1.26	1.49	71
2"	3.32	1.16	7.76	7.04	9.21	3.74	4.45	6.30	5.28	2"	2.39	1.50	1.77	97
3"	9.06	1.87	10.39	11.63	11.97*	5.12	6.14	8.15	•	3"	3.52	2.28	2.76	211

* Consult factory for dimensions of PVDF valves 3" and 4" Consult factory for valves with butt weld end connectors
Consult factory for H Flanged, PP and PVDF dimensions

ELECTROMNI® BALL VALVE

• Electrically actuated OMNI Ball Valve • Maximum line pressure 150 PSI • Economical, dependable, quarter turn motor • 5 second cycle time • NEMA IV weatherproof housing • Options include other voltages, extra limit switch, position indicating lights, and 2-wire control

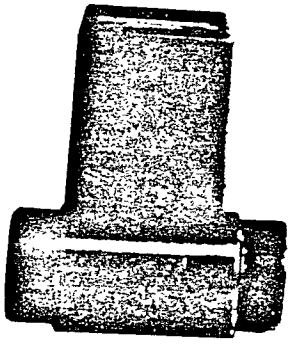

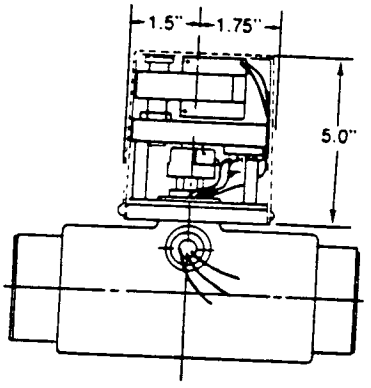

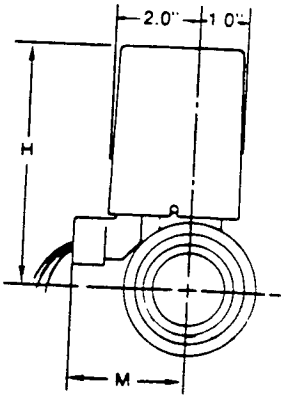

SPECIFICATIONS

SIZES: 3/8"–2"
MODELS: Socket, Threaded, Flanged (ANSI)
BODIES PVC, CPVC
SEATS Teflon backed with EPDM
SEALS: EPDM
ACTUATOR. 115 VAC single phase

DIMENSIONS (IN INCHES)

Valve Size	Weight (lbs.)	H	M
3/8"	1.75	5.50	2.75
½"	1.75	5.50	2.75
¾"	2.0	5.90	2.75
1"	2.5	6.25	2.75
1¼"	3.0	6.50	2.75
1½"	3.0	6.50	2.75
2"	4.0	6.75	2.75

VOLTAGE

Voltage	Current Draw	Cycle Time	Duty Cycle
12 VAC	2.25 AMPS	5 SEC.	75%
24 VAC	4.0 AMPS	5 SEC	75%
115 VAC	2.2 AMPS	5 SEC	75%
220 VAC	1.25 AMPS	5 SEC.	25%
12 VDC	1.0 AMPS	5 SEC	25%
24 VDC	1.0 AMPS	5 SEC	75%

LABCOCK®

• Calibrated flow indicator • Pressure rating 150 PSI up to 120°F (Water, Non-shock) • Quarter turn operation with lever handle for ease of adjustment • Every combination of thread or hose connections is available • Perfect for use in the laboratory and as a sampling valve • Special colors available on custom orders

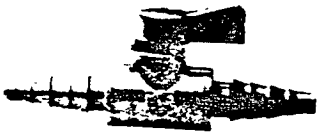

HOSE × HOSE

MALE THREAD × HOSE

MALE THREAD

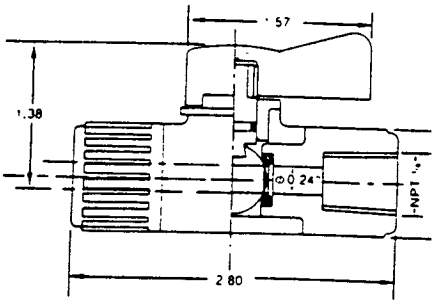

SPECIFICATIONS

SIZE: ¼"
MATERIAL: PVC
MODELS: Male Thread × Male Thread
Male Thread × Hose
Male Thread × Female Thread
Hose × Hose
Female Thread × Female Thread

FEMALE THREAD

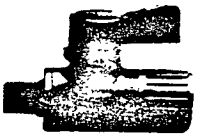

MALE THREAD × FEMALE THREAD

SEDIMENT STRAINERS

• Transparent PVC strainer body permits easy evaluation of filter screen condition • Completely constructed of corrosion resistant thermoplastic • Worn or blocked filter screens can be replaced with filter body inline • EPDM "O"-Rings for tight bonnet seal

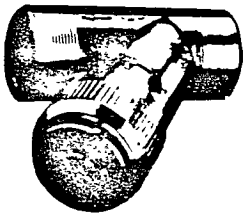

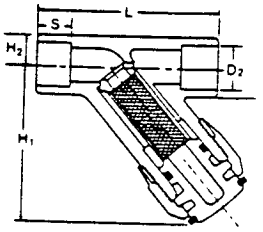

Figure A (½"–4")

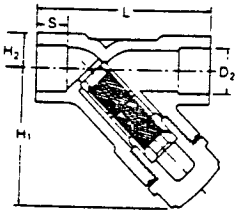

Figure B (3")

Cv VALUES

Size	½"	¾"	1"	1½"	2"	3"	4"
Cv	2 8	4 9	7 2	7 8	28 7	73 5	119 0

SPECIFICATIONS

SIZES: ½"–4"
MATERIAL: PVC
MODELS: Socket, Threaded
TEMPERATURE: 30° F to 140° F

DIMENSIONS— (INCHES UNLESS OTHERWISE NOTED)

Size	H_1	H_2	L	S Socket	D_2 Socket	D_2 Threaded	Weight (LBS)
½"	2 83	0 53	3 15	0 87	0 85	NPT ½"	0.25
¾"	3 27	0.65	3.75	1.00	1 05	NPT ¾"	0.35
1"	3 78	0 81	4 18	1 13	1 35	NPT 1"	0.50
1½"	4 73	1 20	5.83	1 38	1.90	NPT 1½"	1.25
2"	5 59	1 50	7 01	1 50	2 40	NPT 2"	2.25
3"	7 49	2 30	10.32	1 88	3 50	NPT 3"	7 50
4"	9 26	2 75	12 81	2.25	4 50	NPT 4"	10 00

FILTER SCREEN SIZES

Mesh (holes per linear inch)	20	30	40
Max Particle Size (inch)	033	023	011
Micron Particle Size (10-3MM)	840	595	420
Unit Free Filtering (%)	39	52	78

PRESSURE RATING (WATER, NON-SHOCK)

Size	½"- 1"	1½"- 2"	3"- 4"
Pressure 70°F	150	90	60

PVDF/TEFLON/EPDM LOW TORQUE GASKETS

• Convex sealing allow optimum sealing with only ⅛ the torque convention flat-faced gaskets • Lower tightening torques give longer gasket life • Three models EPDM, PVDF, or Teflon bonded EPDM • EPDM hardness of 65°-66° (Durometer A)

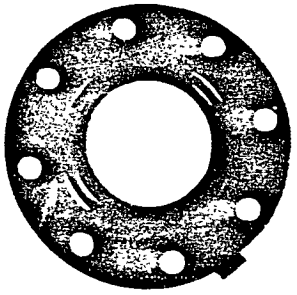

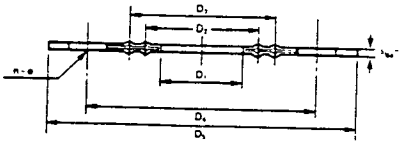

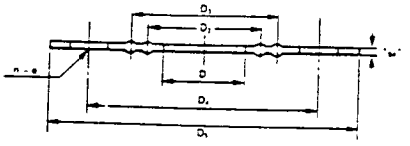

DIMENSIONS—EPDM AND PVDF OR TEFLON/EPDM (IN INCHES—BOLT HOLES ANSI)

Size	D_1	D_2	D_3	D_4	D_5	e	n
½"	0.7	1.0	1.6	2.4	3.4	0.6	4
¾"	0.9	1.3	1.9	2.8	3.8	0 6	4
1"	1.2	1.5	2.1	3.1	4 2	0.6	4
1¼"	1.5	2.0	2.6	3.5	4.5	0.6	4
1½"	1.7	2.1	2.7	3.9	4.9	0.6	4
2"	2.1	2.7	3.3	4.7	5.9	0.8	4
2½"	2.7	3.4	4.0	5.5	6.9	0.8	4
3"	3.2	3.9	4.4	6.0	7.4	0.8	4
4"	4.0	4.7	5.4	7.5	8.9	0.8	8
5"	5.0	5.7	6.5	8.5	9.9	0.9	8
6"	5.9	6.6	7.5	9.5	10.9	0.9	8
8"	7.8	8.5	9.7	11.8	13 4	0.9	8
10"	9.8	10.6	12.1	14.3	15 9	1.0	12
12"	11.8	12.8	13.9	17.0	18 9	1.0	12

SPECIFICATIONS

SIZES: ½"–12"
MATERIALS: EPDM and EPDM with Teflon® and PVDF bonding
TEMPERATURE RANGE: –4° to 210°F

ASAHI/AMERICA

QUARTER MASTER™ ELECTRIC ACTUATOR

• Low cost/high quality Quarter-turn Elecrtic Actuator for PVC, PP, PVDC and CPVC Ball Valves ½"-2" • Easy-to-read position indicator • Corrosionproof/waterproof NEMA IV housing, rugged thermoplastic with stainless steel trim • Large-handled manual override • Duty cycle 75% for high-cycle applications • Compact design perfect for OEMs and customers with space limitations • 115 V/60

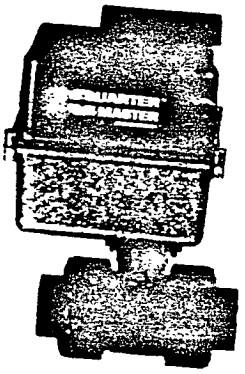

SERIES E15 & E16
UNIDIRECTIONAL & REVERSIBLE

SPECIFICATIONS/ACTUATOR

TEMPERATURE LIMIT: 140°F
ENCLOSURE: NEMA IV
LIMIT SWITCHES: SPDT, 15 amps, two standard, two optional
VOLTAGES: 115V and 230 AC, 12V and 24V DC
LUBRICATION: Permanently lubricated gear train

E 15 WIRING SCHEMATIC

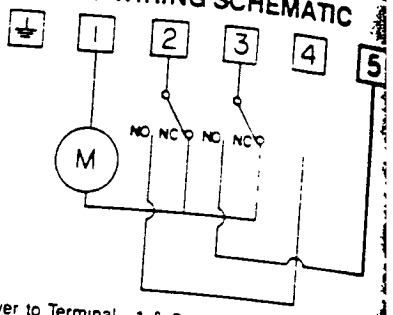

Power to Terminal - 1 & 2 = Valve Closed
Power to Terminal - 1 & 3 = Valve Open
Auxiliary Contact - #4 = Indication Valve Closed
Auxiliary Contact - #5 = Indication Valve Open

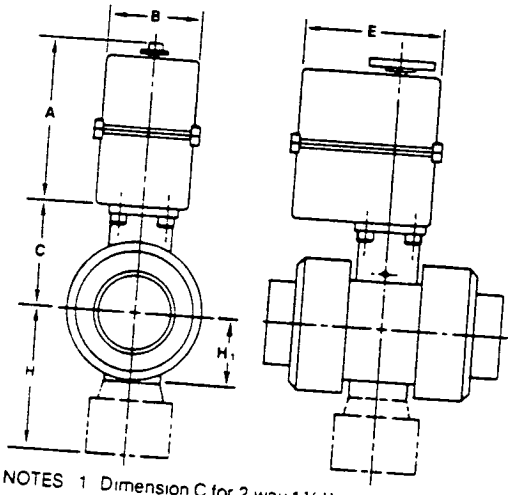

NOTES 1 Dimension C for 2 way 1½" valve is 3.46
Dimension C for multiport 1½" valve is 3.85.
2 Dimension C for 2 way 2" valve is 3.67.
Dimension C for multiport 2" valve is 4.00

DIMENSIONS

Valve Size	H_1 2-way	H_1 3-way	E	A	B	C
½"	0.95	1.77	5.51	5.77	3.77	1.95
¾"	1.19	2.17	5.51	5.77	3.77	2.31
1"	1.38	2.60	5.51	5.77	3.77	2.46
1¼"	1.57	*	5.51	5.77	3.77	2.92
1½"	1.87	3.86	5.51	5.77	3.77	Note 1
2"	2.09	4.45	5.51	5.77	3.77	Note 2

*Consult factory.

ENGINEERING DATA

Actuator Model	Torque in/lbs.	Voltages	Duty Cycle	Cycle Time 90 seconds	Amp Draw	Weight (lbs.)
E 15	120	115 VAC	75%	10	.2	3.5
E 15	120	220 VAC	75%	10	2	3.5
E 16	120	12 VDC	75%	5	1.5	3.5
E 16	120	24 VDC	75%	5	1.5	3.5

TRUE UNION BALL CHECK VALVE

• Ball unseats to permit flow in one direction but seals against seat to prevent backflow • May be mounted either vertically or horizontally • Minimum shut-off is 5 PSI • True Union end connectors facilitate easy maintenance • Foot valve option permits screening of foreign matter

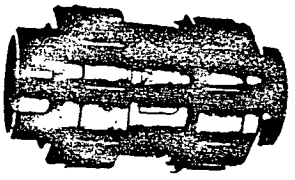

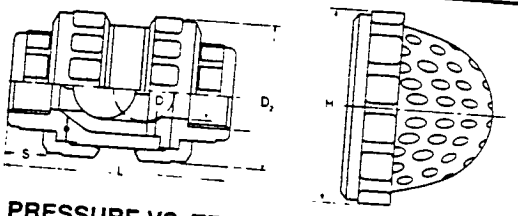

SPECIFICATIONS

SIZES: ½"–4"
MODELS: Socket, Threaded, Flanged (ANSI)
BODIES: PVC, CPVC, PP and PVDF
SEATS/SEALS EPDM, or Teflon-coated VITON

PRESSURE VS. TEMPERATURE (PSI,WATER, NON-SHOCK)

Size (Inches)	PVC 30°F 120°F	CPVC 30°F 120°F	CPVC 140°F	CPVC 175°F	CPVC 195°F	PP −5°F 85°F	PP 140°F	PP 175°F	PVDF 140°F	PVDF 175°F	PVDF 195°F	PVDF 210°F
½–2"	150	150	120	85	55	150	85	60	150	120	110	85
3–4"	100	100	85	60	45	70	60	40	100	85	60	45

DIMENSIONS (IN INCHES)

Size	PVC/CPVC Socket D_2	Wt. (lbs.) Socket & Threaded	D_1	PVC, CPVC S Socket	D	L Socket	L Threaded	L Flanged	Foot Valve H	Foot Valve L Socket	Foot Valve L Threaded	Foot Valve L Flanged	C_v Value
½"	0.85	0.25	0.59	0.69	1.89	3.43	3.39	5.10	2.36	4.73	4.69	5.40	10
¾"	1.06	0.50	0.79	0.72	2.36	3.86	4.06	6.10	2.76	5.32	5.52	6.40	25
1"	1.33	0.75	1.98	0.87	2.76	4.37	4.45	6.30	3.74	6.24	6.32	6.90	36
1½"	1.91	1.75	1.57	1.09	3.74	5.94	5.94	7.35	5.24	8.33	8.33	8.50	80
2"	2.39	2.00	2.00	1.16	4.17	6.77	6.99	9.50	5.24	8.97	9.17	10.50	151
3"	3.52	8.10	3.07	1.87	5.98	9.57	8.74	14.65	8.27	12.60	11.80	14.60	310
4"	4.52	13.08	3.94	2.00	5.98	12.20	11.69	17.65	10.00	18.25	18.25	20.25	521

SWING CHECK VALVE

• Offers minimal flow resistance • May be installed in horizontal or vertical lines • Disc seats tightly • Top entry permits cleaning without removing valve from the line • Rated for full vacuum service • Optional external lever and weight or external spring to assist the disc in closing faster

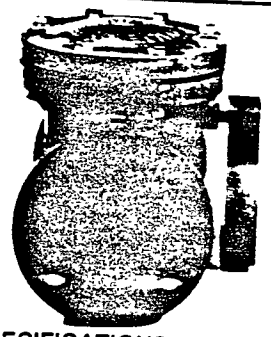

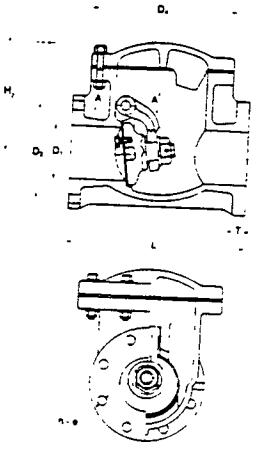

SPECIFICATIONS

SIZES: 3/4"–8"
MODELS: Flanged (ANSI)
BODIES: PVC, PP, PVDF
SEATS: EPDM, Teflon®, VITON®
SEAL: EPDM, Teflon®, VITON®

Size	Weight (lbs.)	D_1	D_2	D_4	L	T	H_2
3/4"	1.8	0.79	2.76	3.39	5.51	0.59	3.54
1"	3.6	0.98	3.13	5.12	6.30	0.63	4.72
1 1/2"	6.0	1.57	3.88	5.71	7.09	0.71	5.43
2"	8.9	1.97	4.75	7.09	7.87	0.79	6.46
2 1/2"	11.3	2.56	5.50	7.87	9.45	0.87	6.61
3"	12.2	3.15	6.00	8.07	10.24	0.87	6.73
4"	21.0	3.94	7.50	10.43	11.81	0.94	8.39
5"	36.1	4.92	8.50	12.99	13.78	0.94	9.76
6"	46.0	5.91	9.50	14.57	15.75	0.98	11.14
8"	75.2	7.87	11.75	16.73	19.69	1.18	13.23

	PVC				PP				PVDF				
	Elastomer			Teflon®	Elastomer			Teflon®	Elastomer				Teflon®
Size	30°F 70°F	105°F	120°F	30° 120°F	−5°F 105°F	140°F	175°F	−5°F 175°F	−5°F 140°F	175°F	190°F	210°F	−5°F 210°F
3/4"	150	150	100	85	150	100	90	70	150	120	100	85	85
1"	150	150	100	85	150	100	90	70	150	120	100	85	85
[illegible]	150	150	100	85	150	100	90	70	150	120	100	85	85
2	150	150	100	85	150	100	80	70	150	120	100	70	85
2 1/2"	150	100	100	85	150	85	70	70	150	120	90	55	85
3"	150	100	100	70	150	70	60	60	150	100	80	55	85
4"	100	70	70	70	100	65	40	60	150	100	80	40	70
5"	100	70	70	60	100	50	35	40	100	85	60	40	70
6"	100	70	60	40	100	40	30	30	100	85	60	30	60
8"	70	40	40	40	70	40	30	30	70	70	50	30	40
									70	50	40	30	40

OMNI® SERIES BUTTERFLY VALVE

• Economically-priced, compact, lightweight Butterfly Valve • For bubble-tight sealing up to 150 PSI and full vacuum service • Low seating torque • Replaceable EPDM ring embedded in the disc • Full engagement of shaft in the disc • Shaft is a non-wetted part

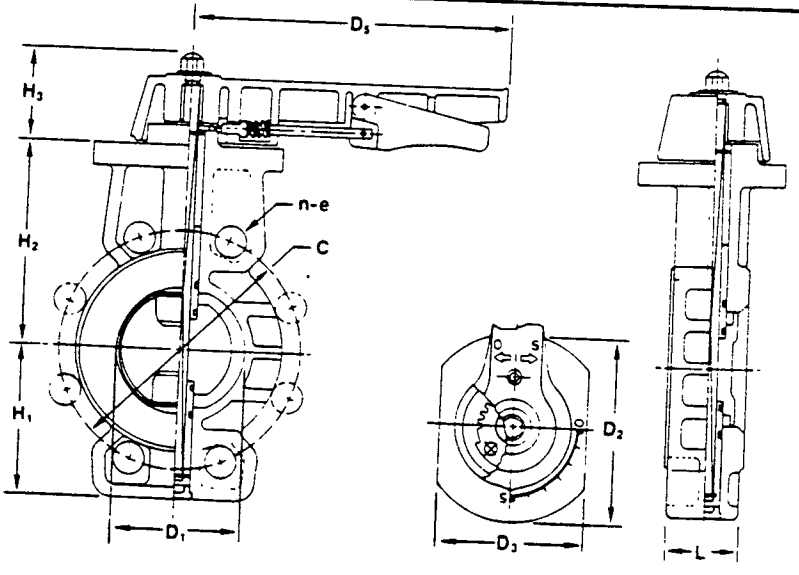

SPECIFICATIONS

SIZES: 2"–8" Lever Operated
MODEL: Wafer Style for ANSI Flanges
BODY: PVC
DISC: PVC
SEAT RING: EPDM, Viton, Nitrile (Buna N)
SEAL: Same as Seat Ring

DIMENSIONS (IN INCHES)

Nominal Size	D_1	ANSI 150 lbs			D_2	L	H_1	H_2	H_3	D_5	D_3	C_V Value
		C	n	e								
2"	1.97	4.75	4	0.75	4.13	1.69	2.68	4.17	2.44	7.87	3.66	70
3"	3.15	6.00	4	0.75	4.72	1.93	3.66	5.08	2.44	7.87	3.60	410
4"	3.94	7.50	8	0.75	5.28	2.20	4.29	5.71	2.68	9.84	3.90	490
6"	5.91	9.50	8	0.87	7.40	2.76	5.31	6.85	3.39	11.81	4.96	1155
8"	7.87	11.75	8	0.87	7.40	2.80	6.61	8.03	4.13	15.75	5.12	1945

PRESSURE vs TEMPERATURE

SIZE	30°–140°F
2"	150 psi
3"	150 psi
4"	150 psi
6"	150 psi
8"	150 psi

SYNTECHNICS INC.

FRP DIVISION
700 Terrace Lane
Paducah, KY 42003
(502) 898-7303
FAX: 502-898-7306

Foster Wheeler Environmental Corporation
One Oxford Valley, Suite 200
2300 Lincoln Highway

Date: 24-Mar-99

attn: Dean Peterson

re: Your Purchase Order # 017262

Dear Dean Peterson

Thank you for your order. The schedule for processing your order is shown below:

	DATE
Purchase Order Received	3 / 23 / 99
Approval Drawing to be Sent	3 / 25 / 99
Return of Approved Drawing(Projection)	3 / 29 / 99
Product Shipped(Projection)	4 / 26 / 99
Product Delivered(Projection)	4 / 28 / 99

The ship date and delivery date above are based on the timely return of our approval drawings by the date specified. Should the return of our drawings be delayed, the ship date could be delayed as well. Please make sure the approval drawings are made a top priority.

Should you have any questions, please feel free to contact me.

Sincerely,

Dale Beverly

Dale Beverly
Sales

cc: Malcolm Black

Technician full day / half day price
include machine

Vistor 3 gal. bucket

TYPE 75 BUTTERFLY VALVE

PP or PVDF disc offers better chemical and abrasion resistance at temperatures higher than can be achieved with PVC discs • PVDF valve ideally suited for throttling highly corrosive chemicals at elevated temperatures • All models can be fitted with a variety of elastomeric seat materials to provide bubble-tight seating for a wide range of chemicals • 403 stainless steel shaft (non-wetted part) • Optional gear operators for sizes 1½"–6" • Rated for full vacuum service

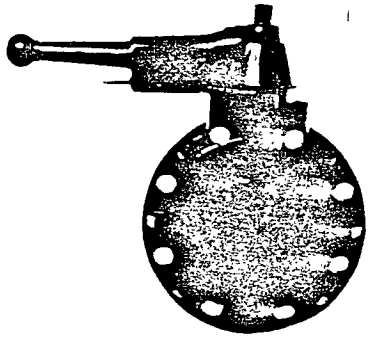

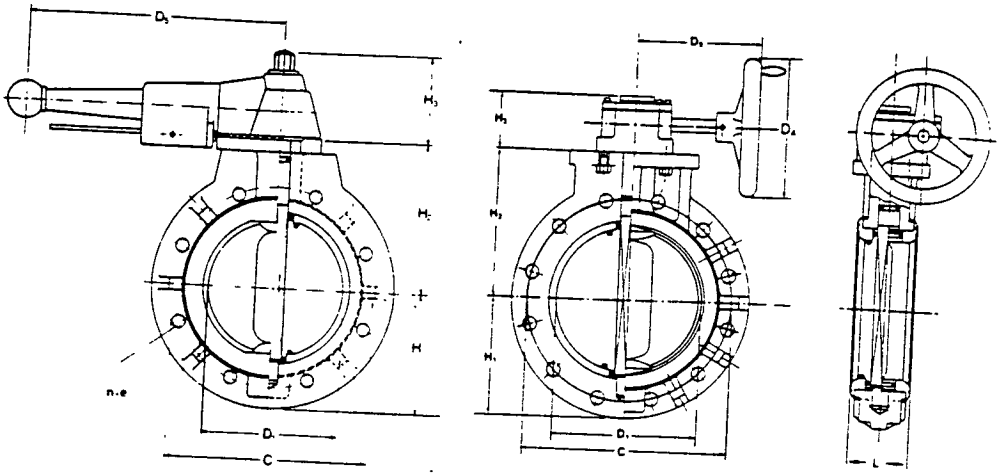

SPECIFICATIONS

SIZES 1½"–24"
MODELS: Wafer style (for ANSI flanges)
OPERATORS. Lever, Gear
BODIES: PVC, PP, PVDF
DISCS. PP, PVDF, PVC (Optional)
SEATS EPDM or VITON®, Nitrile (Buna N) Butyl, Hypalon, Natural Rubber, Neoprene, Chlorinated Polyethylene (CPE), Silicone
SEALS. Same as seating material
ACTUATORS· Electric, Pneumatic

PRESSURE VS. TEMPERATURE (PSI WATER, NON-SHOCK)

Size (Inches)	PVC Body With PP Disc and appropriate elastomer*				PVDF Body With PVDF Disc and appropriate elastomer*			
	30°F 70°F	120°F	140°F	180°F	−5°F 140°F	141°F 175°F	176°F 210°F	211°F 250°F
1½–3"	150	100	70	30	150	100	85	70
4–6"	150	100	45	30	150	100	85	70
8"	150	100	40	20	150	85	70	60
10"	150	100	40	20	150	85	70	60
12"	100	60	30	15	100	60	40	20
14"	100	60	30	7	100	40	30	15
16"	85	60	30	7	85	40	30	15
18"	70	30	20	7	70	40	30	15
20–24"	50	30	20	7	50	30	20	15

*Maximum allowable temperature of Viton is 250°F All other elastomers have a limit of 210°F

DIMENSIONS—LEVER (IN INCHES—BODY BOLT HOLES ANSI)

Size	Weight (lbs.)	D_1	C	e	n	L	H_1	H_2	H_3	D_5
1½"	2 00	1.99	3.88	0.63	4	1 54	2 95	3 74	2 76	7 87
2"	2 65	2.22	4.75	0.75	4	1 65	3.25	3 82	2.76	7 87
2½"	3 32	2 76	5 50	0.75	4	1 81	3 66	4.33	2 76	7 87
3"	3 76	3 11	6.00	0.75	4	1 81	3 94	4.53	2.76	7.87
4"	5 08	4 06	7.50	0.75	8	2.20	4.53	5.31	2.76	9.06
5"	10 39	5 12	8.50	0.87	8	2 60	5 00	6 30	4.02	11.81
6"	12 16	5 94	9 50	0.87	8	2.80	5.63	7.01	4.02	11.81
8"	22.00	7.99	11 75	0.87	8	3 43	6.70	8.27	4.02	15 75

DIMENSIONS—GEAR (IN INCHES—BODY BOLT HOLES ANSI)

Size	Weight (lbs.)	D_1	C	n	e	L	H_1	H_2	H_3	D_4	D_5
8"	33.60	7.99	11.75	8	0.87	3.43	6.69	8.27	3.23	7.87	6.89
10"	41.10	10.04	14.25	12	0.98	4.33	7.99	9.45	3.23	7.87	6.89
12"	77.40	12.24	17.00	12	0.98	5.20	9.53	11.69	4.02	9.84	8.74
14"	85.80	14.09	18.75	12	1.14	5.20	10.24	11.81	4.02	9.84	8.74
16"	112.70	15.69	21.25	16	1.14	6.73	11.81	13.78	4.02	9.84	8 74
18"	151.60	17.74	22.75	16	1.26	7.13	12.40	14.57	4.13	12.40	12.99
20"	172.40	19.70	25.00	20	1.26	7.60	13.78	15.75	4.13	12.40	12.99
24"	258 00	23.66	29.50	20	1.38	8.39	16.02	18.31	4.13	12.40	12.99

DAMPER STYLE BUTTERFLY VALVE

• Provides the highest corrosion protection at elevated temperatures of any thermoplastic butterfly valve • Specifically designed for modulating flow • Solid PVDF disc which outlasts coated discs • Titanium shaft (wetted part) • Chevron shaped Teflon packings for perfect mechanical sealing of stem

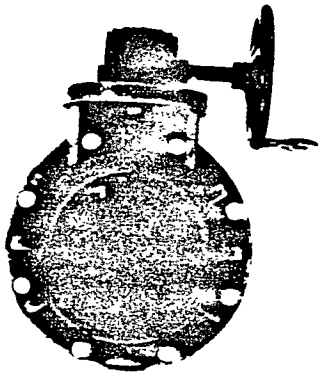

SPECIFICATIONS

SIZES: 2"–24"
MODELS: Wafer style for ANSI Flat-face Flanges
BODY: PVDF
DISC: PVDF
SEALS: Teflon
ACTUATORS: Electric, Pneumatic

PRESSURE VS. TEMPERATURE

(PSI, WATER, NON-SHOCK)

Size (Inches)	PVDF -40° F 250° F
1 1/2–6	150
8	150
10–12	100
14–24	60

DIMENSIONS—LEVER (IN INCHES—BODY BOLT HOLES ANSI)

Size	Weight (lbs.)	D_1	C	L	H_1	H_2	H_3	D_5
1 1/2"	2 00	1.99	3 88	1.26	2 95	3 74	2 76	7 87
2"	2.65	2 22	4 75	1.38	3.25	3 82	2 76	7.87
2 1/2"	3.32	2 76	5 50	1 46	3.66	4 33	2 76	7 87
3"	3 76	3 11	6.00	1 46	3 94	4 53	2 76	7.87
4"	5 08	4 06	7.50	1 85	4 53	5 31	2 76	9 06
5"	10.39	5 12	8 50	2 24	5 00	6 30	4 02	11 81
6"	12.16	5.94	9 50	2 44	5 63	7 01	4 02	11.81
8"	33.60	7.99	11 75	3 00	6 69	8.27	4 02	11 81

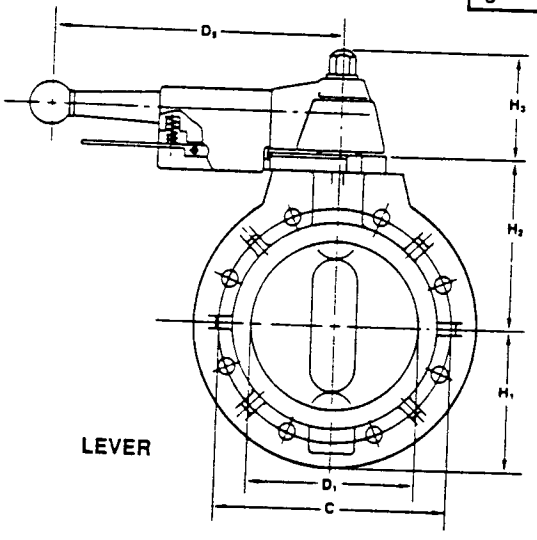

LEVER

DIMENSIONS—GEAR (IN INCHES—BODY BOLT HOLES ANSI)

Size	Weight (lbs.)	D_1	C	L	H_1	H_2	H_3	D_4	D_5
10"	41 10	10 04	14 25	3 78	7 99	9 45	3 23	7 87	6.90
12"	77 40	12.24	17 00	4 57	9 53	11 69	4 02	9 84	8.75
14"	85 80	14 09	18 75	4 57	10 24	11 81	4 02	9 84	8.75
16"	112 70	15 69	21 25	6 18	11 81	13 78	4 02	9 84	8.75
18"	151 60	17 74	22.75	6 57	12 40	14 57	4 13	12 40	13.00
20"	172 40	19 70	25 00	6 97	13 78	15 75	4 13	12 40	13 00
24"	258 00	23 66	29 50	7 76	16 02	18 31	4 13	12 40	13 00

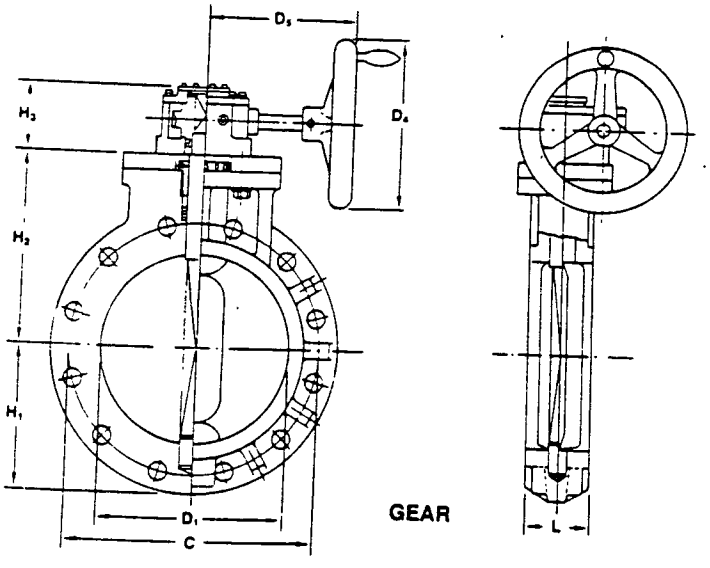

GEAR

PVDF WEEPAGE (WATER)

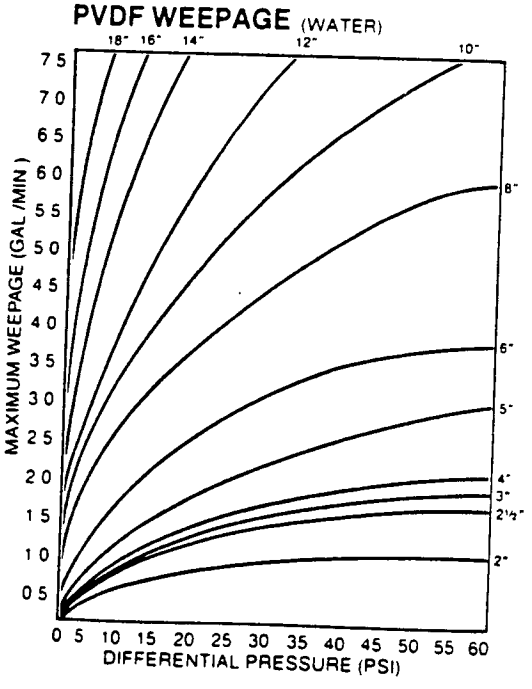

TYPE 77-Z BUTTERFLY VALVE

• PVDF coated cast iron body gives valve added strength to withstand pipeline pressure • Bubble tight shut-off • Teflon chevron type packing for perfect mechanical sealing of stem • Ideal for highly corrosive service because Teflon disc and seals and PVDF liner are the only wetted parts • Maintenance Inspection Tap permits early detection of chemical attack on seat cushion • Stainless steel stem (non-wetted part) • Rated for full vacuum service

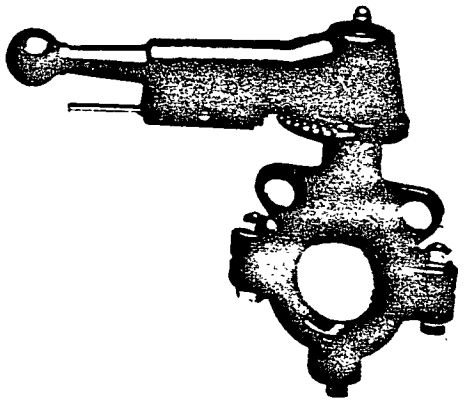

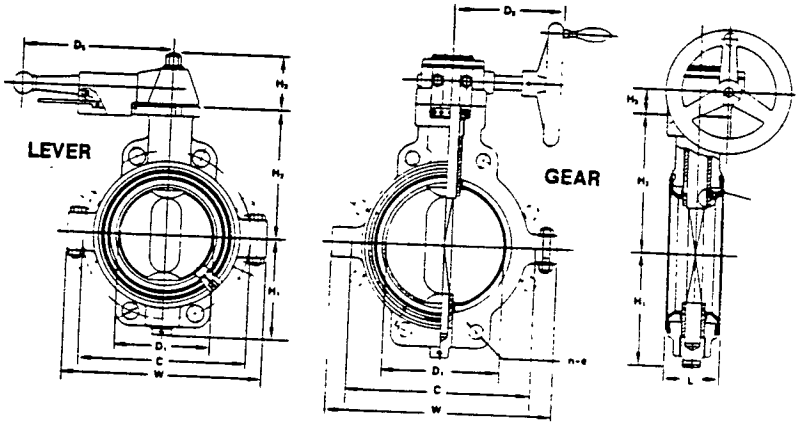

SPECIFICATIONS

SIZES. 2"–16"
MODELS Wafer style (for ANSI, full-face, flat flanges)
OPERATIONS Lever, Gear
BODY: PVDF coated ductile cast iron
DISC· Teflon
SEAT. PVDF backing with EPDM backing
SEALS: Teflon V-packing
ACTUATORS· Electric, Pneumatic

PRESSURE VS. TEMPERATURE

(PSI WATER NON-SHOCK)

Size (Inches)	PVDF –4°F 250°F
2–4"	100
5–6"	85
8–10"	70
12–16"	55

DIMENSIONS—LEVER (IN INCHES—BODY BOLT HOLES ANSI)

Size	Weight (lbs.)	D_1	C	e	n	L	H_1	H_2	H_3	W	D_5
2"	6.50	2.17	4.75	0.75	2	1.57	2.95	3.35	2.76	5.51	7.87
2 ½"	8.50	2.76	5.50	0.75	2	1.77	3.15	4.53	2.76	6.30	7.87
3"	10.00	3.15	6.00	0.75	4	1.97	4.13	4.69	2.76	7 87	7.87
4"	13.50	3.94	7.50	0.75	4	2.17	4.53	5.31	2 76	8.66	9.06
5"	23 00	4.92	8.50	0.87	4	2.36	5.12	6.30	4 02	10.24	11.81

DIMENSIONS—GEAR (IN INCHES—BODY BOLT HOLES ANSI)

Size	Weight (lbs.)	D_1	C	e	n	L	H_1	H_2	H_3	W	D_4
6"	47.00	5.91	9.50	0.87	4	2.76	5.79	7.68	1.50	11.42	7.87
8"	63 50	7.52	11.75	0.87	4	3.15	7.09	8.86	1.50	14.17	7.87
10"	85.00	9.65	14.25	0.87	4	3.54	8.66	10.24	1.50	16.38	7.87
12"	145.50	11.50	17.00	0.87	4	3.94	10.24	11.42	1.97	19.37	9.84
14"	212.00	12.99	18.75	0.87	4	4.69	11.02	12.60	1.97	21 65	9.84
16"	234 00	15.16	21.25	0.87	4	5.16	12.40	14.17	1.97	24 41	9.84

DOUBLE UNION EXPANSION JOINTS

• Union connections for ease of installation • Requires less room, fewer joints and hangers, less pipe expansion loops • Eliminates areas of concentrated stress at expansion loops • Negligible flow resistance versus

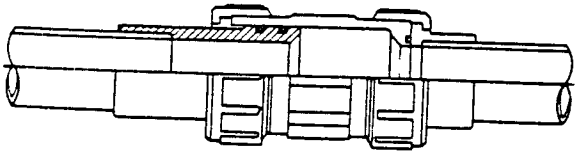

SPECIFICATIONS

SIZES ¾"–4"
MATERIALS: PVC, w/EPDM
TRAVEL. ¾"–3":3.15", 4".3 94"

PRESSURE VS TEMPERATURE

PSI, WATER, NON-SHOCK SIZE: ¾"–4"	
PVC	
30°F–120°F	150 PSI

DIAPHRAGM VALVE

• Flanged face-to-face dimensions are equal to most commonly used lined steel diaphragm valves • Precise throttling of corrosive liquids • Large weir surface allows greater flow with less movement of diaphragm to insure long diaphragm life • Bubble-tight closure even in slurry applications • Position indicator and adjustable travel stops (to prevent overtightening) are standard • Optional 3-part Teflon/PVDF gas barrier/EPDM diaphragm • Optional vacuum service diaphragm valves

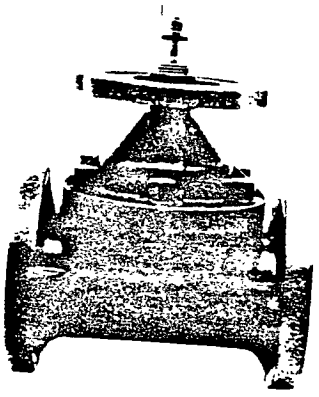

FLANGED

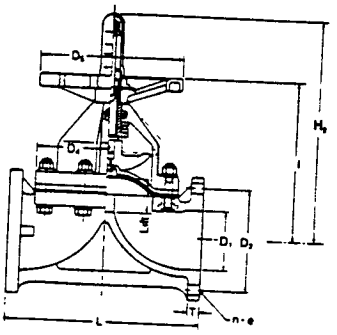

TRUE UNION

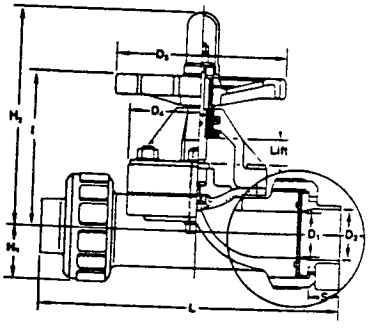

SOCKET THREADED

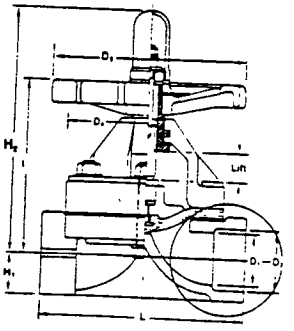

SPECIFICATIONS

SIZES: ½"–10"
MODELS: Flanged (ANSI—all sizes and materials)
Threaded: ½"–2" (PVC, CPVC, PVDF)
Socket: ½"–2" (PVC, PP, PVDF)
True Union: ½"–2" (PP, PVDF)
Butt: ½"–2" (PP, PVDF)
BODIES PVC, CPVC, PVDF
DIAPHRAGMS. Teflon, EPDM (Standard)
Other elastomers such as Nitrile (Buna N), Butyl, Hypalon, Neoprene, and Natural Rubber are also available
ACTUATORS. Electric, Pneumatic

Butt

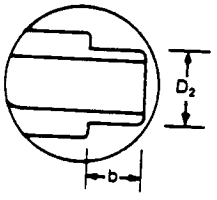

Size	b	L	D2/MM
½"	.57	4.88	20
¾"	.63	5 67	25
1"	.71	6.06	32
1¼"	.85	6.80	40
1½"	93	7.64	50
2"	1.08	8.82	63

DIMENSIONS—FLANGED (IN INCHES—BODY BOLT HOLES ANSI)

Size	Weight (lbs.)	D_1	D_2	D_4	D_5	L	LIFT	H_2
½"	1.95	0.63	2.38	2.01 by 3 07	3.74	4.25	0.39	3.35
¾"	2.10	0.79	2.76	2.48 by 3.07	3.74	5.88	0.47	3 70
1"	2.90	0.98	3.13	2.68 by 3.46	4.33	5.88	0.59	3.70
1 ½"	5.00	1.61	3.88	4.72	5.91	6.94	0.87	5.31
2"	6.60	2.05	4.75	5.35	5.91	6.94	0.87	5.31
2 ½"	11.50	2.64	5.50	7 17	8.27	9.84	1.54	10.55
3"	17.00	3.07	6.00	7 48	8.27	10.38	1.89	8.27
4"	27.40	3.94	7.50	9.45	9.84	12.94	2.36	10.36
5"	41.75	4.92	8.50	12.60	11.81	16.14	2.36	16.54
6"	64.75	5.83	9.50	15.16	16.14	18.90	2.76	18.74
8"	101.00	7.72	11.75	16.93	16.14	22.44	3 74	24 69
10"	192.25	9.72	14.25	21.26	22.05	26.77	5 04	30.63

DIMENSIONS—TRUE UNION AND SOCKET/THREADED (IN INCHES)

Size	Weight (lbs.)	D_1	D_2 Threaded	D_2 Socket	D_2	D_4	D_5	S Socket	L Butt	Lift	L	I	H_1	H_2	L Soc/Thd
½"	1.04	0.59	NPT ½	0.83	.54	2.13 x 2.76	3.74	0.59	6.20	0.39	3.35	3.35	.95	4 92	5.50
¾"	1.33	0.79	NPT ¾	1.05	.71	2.48 x 3.07	3.74	0.67	7.00	0.47	3.74	3.70	1.20	5.20	6 70
1"	1.83	0.98	NPT 1	1.31	.90	2.68 x 3 46	4.33	0.79	7.50	0.59	3.94	3.94	1 40	5.71	7.15
1½"	3.78	1.58	NPT 1½	1.89	1.85	4.92	5.91	0.98	10.65	0.87	6.30	5.32	1.70	7.56	10.80
2"	5.30	2.05	NPT 2	2.37	2.36	5.83	5.91	1.10	11.80	1.22	7.48	5.75	2.10	8 47	12.20

OPERATING PRESSURE VS. TEMPERATURE

	PVC				CPVC				PP				PVDF			
	Elastomer(s)		Teflon*		Elastomer(s)		Teflon*		Elastomer(s)		Teflon*		Teflon*			
Size	30°F 104°F	106°F 140°F	30°F 104°F	106°F 140°F	30°F 104°F	176°F 194°F	30°F 104°F	176°F 194°F	−5°F 104°F	176°F 212°F	−5°F 104°F	176°F 212°F	−5°F 140°F	141°F 175°F	176°F 212°F	213°F 250°F
½"	150	120	150	100	150	100	150	90	150	100	150	90	150	100	90	90
¾"	150	120	150	100	150	100	150	90	150	100	150	90	150	100	90	90
1"	150	120	150	100	150	100	150	90	150	100	150	90	150	100	90	90
1½"	150	120	150	100	150	100	150	90	150	100	150	90	150	100	90	90
2"	150	120	120	90	150	90	120	75	150	90	120	75	120	90	75	75
2½"	150	120	120	90	150	90	120	75	150	90	120	75	120	90	75	75
3"	150	120	100	75	150	75	100	60	150	75	100	60	100	75	60	60
4"	150	120	90	75	150	75	90	60	150	75	90	60	90	65	60	60
5"	100	90	75	60	100	60	75	45	100	60	75	45	75	60	45	45
6"	100	75	75	60	100	60	75	45	100	60	75	45	75	60	45	45
8"	75	60	60	45	NA	NA	NA	NA	75	50	60	45	60	45	45	45
10"	65	50	60	45	NA	NA	NA	NA	65	50	60	45	60	45	45	45

GATE VALVE

• Unique sliding plug design provides greater seating area than conventional gate valves • New plug and seat permits throttling and eliminates chatter • ANSI face-to-face dimensions on models through 8" • Non-rising stem with position indicator • Competitively priced with cast iron • Rated for full vacuum service

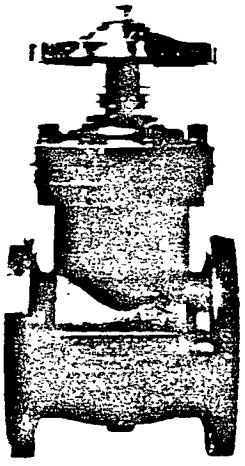

OPERATING PRESSURE VS. TEMPERATURE (PSI, WATER, NON-SHOCK)

Size	30°F–120°F
1½"	150
2"	150
3"	150
4"	150
6"	150
8"	150
10"	110
12"	70
14"	70

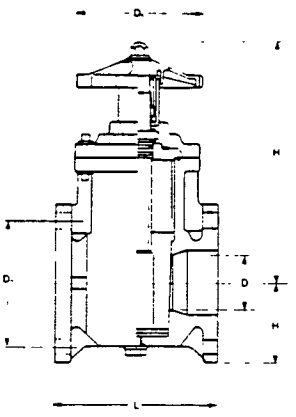

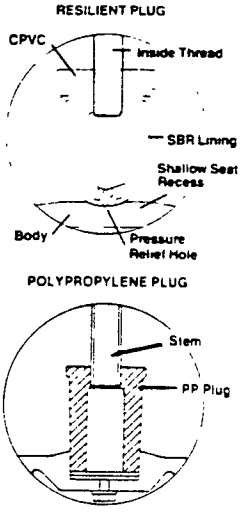

SPECIFICATIONS

SIZE: 1½–14"
MODELS: Flanged (ANSI) Wafer Optional
BODY: PVC
PLUG: PP or CPVC-SBR lined
SEALS: EPDM

DIMENSIONS (IN INCHES)

Size	Weight (lbs.)	D_1	D_2	D_5	L	H_1	H_2	Cv Values
1½"	5.50	1.50	3.88	4.72	6.50	2.50	9.26	140
2"	7.50	1.77	4.75	5.12	7.00	3.00	10.15	230
3"	13.50	2.64	6.00	6.69	8.00	3.75	12.20	580
4"	20.00	3.46	7.50	7.68	9 00	4.50	13.78	1100
6"	40 10	5.12	9.50	10.63	10.50	5.50	17.52	2100
8"	66.20	6.61	11.75	12.20	11.50	6.75	22.72	3900
10"	115.80	8.27	14.25	14 17	14.96	8.00	27.17	6100
12"	146 70	10.04	17.00	16 14	15 75	9 50	31 50	8700
14"	187 40	11.69	18.75	17.91	16.93	10.50	35.82	12200

GLOBE VALVE

• Used for efficient, frequent throttling of flow with minimum erosion to the seat • Bubble-tight shut-off • Quick opening valve • All sizes rated for full vacuum service

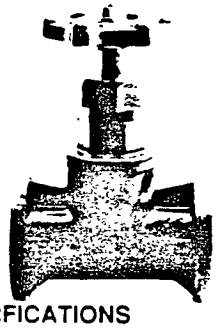

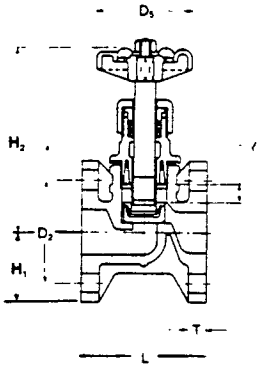

FLANGED

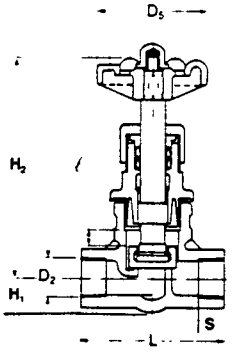

THREADED

OPERATING PRESSURE VS. TEMPERATURE (PSI, WATER NON SHOCK)

	PVC			PP		
	30°F			–5°F		
Size	70°F	105°F	120°F	70°F	140°F	175°F
½"	150	105	105	105	90	65
¾"	150	105	105	105	90	65
1"	150	105	105	105	90	65
1¼"	150	105	105	105	90	65
1½"	150	105	105	105	90	65
2"	150	105	90	105	70	40
2½"	105	105	90	105	60	35
3"	105	105	90	105	60	35
4"	105	80	65	105	60	35

SPECIFICATIONS

SIZES ½"–4"
MODELS: Flanged (ANSI—all sizes)
Threaded (½"–2")
Socket (½"–2")
BODY: PVC, PP
SEALS: EPDM

DIMENSIONS (IN INCHES UNLESS OTHERWISE NOTED)

	FLANGED								THREADED/SOCKET									
Size	Weight (lbs.)	D_2	L	T	LIFT ℓ	H_1	H_2 Open	D_5	Weight (lbs.)	D_2 So	D_2 Th	S So	L So	L Th	LIFT ℓ	H_1	H_2 Open	D_5
½	0.95	2 38	3.36	0.47	0 32	1.75	5.20	2 60	0.64	0 85	NPT ½	1.18	4.33	3.35	0 32	0 63	5.20	2 60
¾	1 10	2 76	3.74	0.55	0.32	1.93	5.61	2.60	1 10	1.06	NPT ¾	1.38	5.12	3.74	0.32	0.75	5.61	2.60
1	2 20	3 13	4.33	0.55	0 43	2 13	6.34	3.58	1.10	1.33	NPT 1	1.58	5.91	4.33	0.43	0 95	6.34	3 58
1¼	2.90	3.50	5.32	0.63	0.51	2.30	6.57	3 58	1.30	1.67	NPT 1¼	0.98	5.32	5.32	0 51	1.12	6.57	3.58
1½	4.50	3.88	7.48	0.63	0.79	2.50	9.06	5.31	2.70	1.91	NPT 1½	0 98	5.51	5.51	0.79	1.32	9.06	5.31
2	5 30	4 75	7 87	0.63	0.94	3.00	9.92	6 31	3.50	2.38	NPT 2	1.06	7.09	7.09	0.94	1 51	9.92	5 31
2½	13 25	5 50	8.66	0.71	1.38	3.50	13.58	7.28	–	–	–	–	–	–	–	–	–	–
3	15 00	6 00	9.45	0 71	1.38	3.76	14.13	7.28	–	–	–	–	–	–	–	–	–	–
4	22 00	7.50	11 42	0.71	1.58	4.60	16.50	7.28	–	–	–	–	–	–	–	–	–	–

GLOBE CONTROL VALVES

Excellent corrosion and Chemical resistance • Unique Teflon bellows system stem seat seal eliminates need for packing glands • Excellent control at very low flows – as low as C_v of .23 • Electrically actuated also available

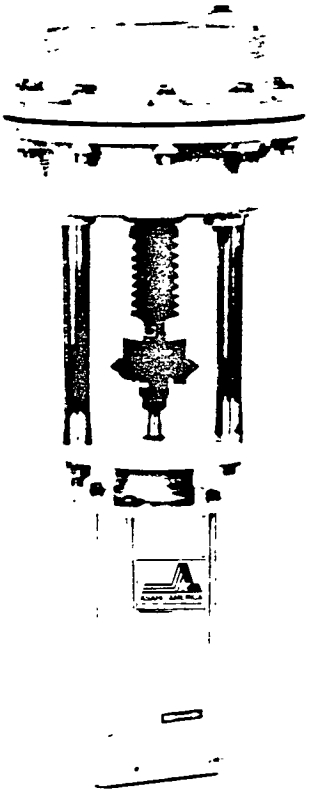

SPECIFICATIONS

SIZE: ½" - 4"
STYLE: Globe Type
MATERIAL: PVC, PP, PVDF, Teflon
STEM SEAL: Teflon Bellows
VALVE SEAL: Viton, Hypalon or Teflon-Encapsulated Viton
Optional Back up Ring
END CONNECTOR: Ansi 150 lbs. Flanges
FLOW CHARACTERISTICS: Linear or Equal Percentage
TEMPERATURE RANGE: PVC 120° F
PP 180° F
PVDF, Teflon 250° F
MAX. LINE PRESSURE: 90 PSI
MAX. DIFFERENTIAL PRESSURE 90 PSI
INSTRUMENT SIGNALS: Pneumatic 3-15 PSI
4-20 Ma Electro-Pneumatic
Accepts 3-15 PSI Direct up to 1" Valve
Above 1" Positioner Required and 60 PSI Air Supply
Other Ranges Optional
RANGEABILITY: 1:50 for ½"-3"
1:30 for 4"
Pneumatic: Max. Air Pressure 90 PSI

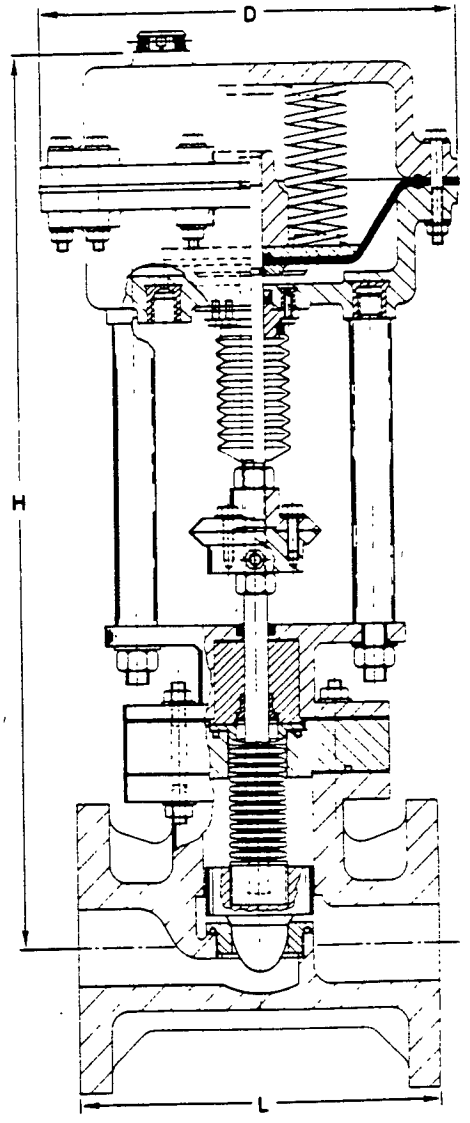

DIMENSIONS - PVC, PP (IN INCHES)

Size	L	H	D
½"	3.34	18.70	8 66
¾"	3.74	18 70	8 66
1"	4 33	18.89	8 66
1¼"	5.31	19.09	8.66
1½"	7.48	18.89	8.66
2"	7.87	19.09	8.66
2½"	8.66	20 07	8.66
3"	9 44	20.07	8.66
4"	11 41	20 27	8.66

DIMESIONS - PVDF, TFE (IN INCHES)

Size	L	H	D
½"	5.11	19.68	8.66
¾"	5.90	19.88	8.66
1"	6 29	19.88	8.66
1¼"	7.08	20 07	8.66
1½"	7.87	20.27	8 66
2"	9.05	20.47	8.66
2½"	11 41	21.45	8.66
3"	12.20	21.85	8 66
4"	13 77	21.81	8 66
5"	ON REQUEST		
6"			

OPERATING PRESSURE VS. TEMPERATURE

(PSI, WATER, NON-SHOCK)

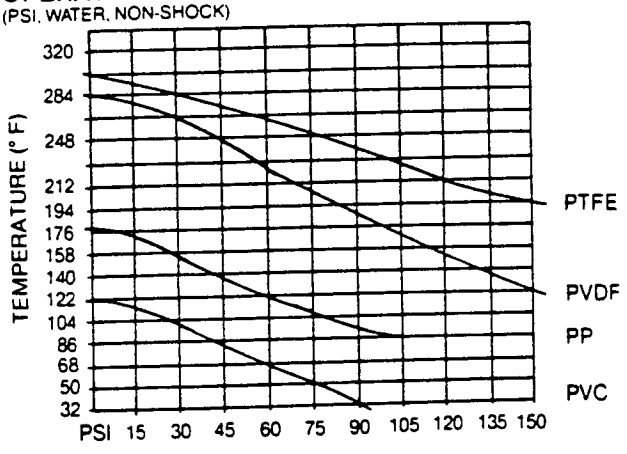

ASAHI/AMERICA

ELECTRIC—SERIES 92 CHIEF (REVERSIBLE)

USED ON: Ball and multiport valves, butterfly valves, diaphragm valves, gate valves

- Reversing type motor, 115V/60Hz
- Brushless, capacitor run motors (AC models)
- Permanently lubricated gear train
- Thermally-bonded epoxy powder coating
- Declutchable manual override
- Visual position indicator (beacon); valve position visible from a distance
- Combination Nema IV and VII enclosure
- Duty cycle 25% at 10 seconds
- Auxiliary contacts for light indication
- ISO bolt circle
- Mechanical brake: 5" butterfly valve and larger sizes

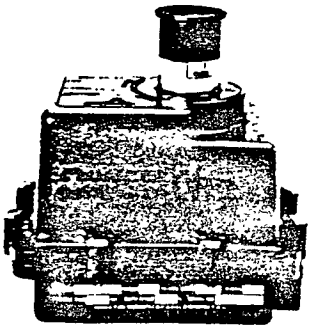

ELECTRIC–SERIES 92 CHIEF

ELECTRIC—QUARTER MASTER II (REVERSIBLE W/OPTIONAL POWAPAK)

USED ON: Ball and Multiport valves
Data available upon request

- Reversing type motor, 115V/60Hz
- Low cost/high quality Quarter turn electric actuators
- Corrosion proof/waterproof NEMA IV thermoplastic housing with stainless steel trim
- Compact design perfect for OEMs and customer with space limitations
- Position indicator, easy to see from a distance
- Manual override large handle, easy to see and use, an unusual feature on such a low cost unit
- Duty cycle 75% for high cycle applications
- Auxillary contracts for light indication
- Powapak for battery backup power
- For ball valve and multiport valves ½"–2" and butterfly valves 1½"–2" (Type 75) 2"–2½" (Omni Style)

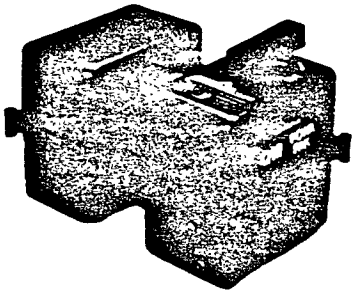

ELECTRIC QUARTERMASTER WITH POWAPACK

PNEUMATIC—SERIES 79 (DOUBLE RACK AND PINION)

USED ON: Ball and multiport valves, butterfly valves

- Air supply pressure: 80 PSI
- Air-to-air
- Air-to-spring (fail "open" or fail "closed")
- Manual override
- Position indication
- Corrosion resistant designs
- Self lubricating
- Solenoids (electric pilot valves) in all types of NEMA enclosures
- Push button (manual pilot valves) optional
- Available in 316 SS, aluminum, plastic

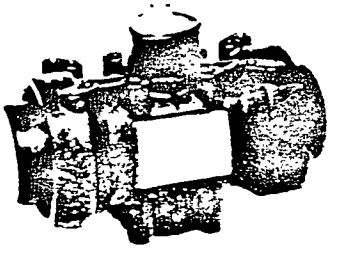

PNEUMATIC–SERIES 79 PLASTIC

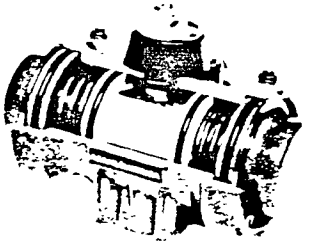

PNEUMATIC–SERIES 79 ALUMINUM

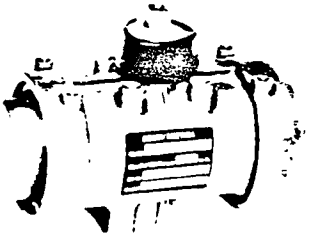

PNEUMATIC–SERIES 79 STAINLESS STEEL

PNEUMATIC—SERIES P (AIR-TO-SPRING)

USED ON: Diaphragm valves

- Air supply pressure: 60 PSI
- Linear diaphragm actuator
- Air-to-spring model (fail "open" or fail "closed")
- Lightweight, die-cast aluminum body with corrosion resistant coating
- Position indicator
- Field adjustable travel stops

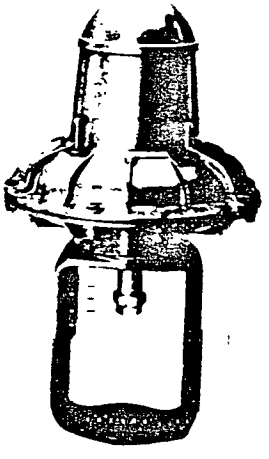

PNEUMATIC–SERIES P

STANDARD OPTIONS FOR ALL ¼-TURN AND MULTITURN VALVES

- Stem extensions for out-of-reach applications
- Stem extensions for panel mounting
- 2" square operating nut
- Tee operating nuts
- Actuator mounting pads
- Locking handle
- Chain operator
- Teflon encapsulated O-ring kits
- O-ring kits of other materials

MULTIPORT BALL VALVES (IN ADDITION TO STANDARD OPTIONS)

- Tee ported ball
- Double L ported ball
- Triple L ported ball

SWING CHECK VALVES

- External lever and weight to assist disc in closing faster
- External spring to assist disc in closing faster

BALL CHECK VALVES

- Spring loaded ball to assist valve in seating faster
- Foot valve and screen assembly

BUTTERFLY VALVES (IN ADDITION TO STANDARD OPTIONS)

- Stem coatings—Teflon
- Gear operator (for sizes 1½"-6")

DIAPHRAGM VALVES (IN ADDITION TO STANDARD OPTIONS)

- Choice of the following diaphragm materials: EPDM, Teflon, Hypalon, Butyl, Nitrile (Buna N), Natural rubber, and Neoprene
- 3-part Teflon/PVDF gas barrier/EPDM diaphragm
- Vacuum service diaphragm valves

ELECTRICALLY ACTUATED GATE AND DIAPHRAGM VALVES

- Positioner (4–20 MA)
- Hazardous location housing (NEMA VII)
- Heater and thermostat

PNEUMATICALLY ACTUATED DIAPHRAGM VALVES

- Positioner (3–15 PSI)
- Positioner (4–20 MA)
- Air-to-air model
- Air-to-spring model (fail "open" or fail "closed")
- Switches (In NEMA IV, or VII enclosures)
- Solenoids (In NEMA IV, or VII enclosures)

ELECTRICALLY ACTUATED ¼-TURN VALVES (BALL AND BUTTERFLY)

- Choice of unidirectional or reversing
- Choice of the following cycle times (seconds): 2.5, 5, 7.5, 15, 22.5
- Extra limit switches (Max. 2)
- Heater and thermostat
- Hazardous location housing (NEMA VII)
- Feedback potentiometer
- Choice of the following voltages: 12 VAC, 24 VAC, 115 VAC, 220 VAC, 12 VDC, 24 VDC
- Tandem arrangement with one actuator operating two valves
- Two wire control
- Center "OFF" wiring

PNEUMATICALLY OPERATED ¼-TURN VALVES (BALL AND BUTTERFLY)

- Positioner (3 to 15 lb. PSI instrument air signal)
- Single or double switches (In NEMA IV or VII enclosures)
- Air-to-air model
- Air-to-spring model (fail "open" or fail "closed")
- Actuators can be resized for different air supply pressures

PIPE	MATERIALS	SIZE
• Proline	Polypropylene	⅜"-24"
• Super Proline	PVDF	⅜"-12"
• Halar	Halar	½"-4"
• Air-Pro	P.E	½"-4"

SPECIALTY FABRICATIONS

We pride ourselves on the extra effort we make to build or modify products to meet the special demands of difficult applications. This varies from small custom adaptors through large scale engineered heat exchangers and double contained underground pipe systems.

CLEANING

Asahi/America provides thorough cleaning and bagging for all products for use in high purity applications.

ASAHI/AMERICA VALVES

Size mm (inch) \ Type	Diaphragm Valve	Ball Valve (TUBV, CBV)	3 Way True Union Ball Valve	Globe Valve	Sediment Strainers	Butterfly Valve (Type 75, 77)	Swing Check Valve	Ball Check Valve	Gate Valve (Type C)	GPM In PVC Pipe At 5 FT/SEC Velocity
15 (1/2")	8	12	9	5	2.8	—	—	13	—	4
20 (3/4")	11	30	21	7	4.9	—	18	25	—	7
25 (1")	18	47	33	11	7.2	—	24	36	—	11
30 (1 1/4")	—	80	—	18	—	—	—	—	—	20
40 (1 1/2")	31	140	71	26	17.8	75	70	80	140	33
50 (2")	75	190	97	47	28.7	100	95	150	230	48
65 (2 1/2")	130	320	—	70	—	260	230	—	450	87
80 (3")	160	430	211	88	73.5	390	300	310	580	110
100 (4")	280	720	345	140	119	500	480	521	1100	195
125 (5")	410	—	—	—	—	770	750	—	1500	315
150 (6")	700	—	—	—	—	1180	1100	—	2100	425
200 (8")	1060	—	—	—	—	2040	1900	—	3900	775
250 (10")	1810	—	—	—	—	3600	—	—	6100	1250
300 (12")	—	—	—	—	—	5160	—	—	8700	1700
350 (14")	—	—	—	—	—	6440	—	—	12240	—
400 (16")	—	—	—	—	—	8340	—	—	—	—
450 (16")	—	—	—	—	—	10890	—	—	—	—
500 (20")	—	—	—	—	—	14060	—	—	—	—
600 (24")	—	—	—	—	—	18500	—	—	—	—

To accurately determine the flow capacity of a valve, a valve constant (C_V) is customarily used. The C_V value, determined by experimental testing, represents the rate of flow of water at 60°F in U.S. gallons per minute through a valve when the downstream pressure is one psi lower than the upstream pressure.

Warranty; Limitation on Liability.

Asahi/America, Inc ("Seller") warrants, to the original Buyer only, that all products delivered hereunder shall be free from defects in design and manufacture for a period of one year from the date of delivery, provided that such products are installed, used, operated, adjusted and serviced only in a proper and appropriate manner and in strict accordance with any instructions relating thereto furnished to Buyer by Seller In no event shall the foregoing warranty extend to any products in any way caused or allowed to be, or installed, operated or used in such a manner as to be, subject or exposed to conditions of misuse, abuse or accident

THE FOREGOING WARRANTY IS EXCLUSIVE AND IN LIEU OF ANY AND ALL OTHER WARRANTIES, EXPRESS OR IMPLIED. NO WARRANTY OF MERCHANTABILITY, NO IMPLIED WARRANTY OF FITNESS FOR ANY PARTICULAR PURPOSE, AND NO IMPLIED WARRANTY ARISING BY USAGE OF TRADE, COURSE OF DEALING OR COURSE OF PERFORMANCE IS GIVEN BY SELLER OR SHALL ARISE BY OR IN CONNECTION WITH THIS SALE AND/OR THE SELLER'S AND/OR BUYER'S CONDUCT IN RELATION THERETO OR TO EACH OTHER, AND IN NO EVENT SHALL SELLER BE LIABLE ON ANY SUCH WARRANTY WITH RESPECT TO ANY PRODUCT.

Liability of the Seller under or in connection with this sale and/or the foregoing warranty shall be limited, at the sole option of the Seller, to one of repair of, replacement of, or a refund of the purchase price of any products or part thereof (a) with respect to which Seller receives, promptly after Buyer's discovery of any alleged defect and prior to the expiration of the one-year warranty period as provided above, notice from Buyer of Buyer's claim of defect, and (b) which shall be returned to Seller by Buyer, as provided herein promptly after Buyer's discovery of such alleged defect and which shall be determined by the Seller to have proven defective within the one-year warranty period provided above, failure by Buyer so to notify Seller and return such products to Seller after Buyer's discovery of such alleged defect shall constitute a waiver by Buyer of any and all claims of any kind with respect thereto Any products returned by Buyer to Seller under the foregoing terms shall be returned to Seller's place of business freight prepaid, accompanied or preceded by Buyer's particularized statement of the claimed defect The risk of loss and freight charges to and from Seller in connection with any returned products shall be borne by Buyer but Seller shall bear such additional freight charges arising in connection with any such returned products ultimately determined by Seller to be defective under the terms of the foregoing warranty, the cost of repair or replacement (if any) of such products, and the risk of loss or damage while such products are in Seller's possession at its place of business The foregoing remedy shall constitute the sole and exclusive remedy of the Buyer under or in connection with this sale and/or warranty of the Seller Except as specifically provided herein, Seller shall not be responsible or liable for any costs, expenses or damages of Buyer in connection with any removal, repair or replacement (including any attempts or actions relating thereto) of any allegedly defective products, and no charge or setoff of any kind of Buyer relating thereto shall be made against the Seller without prior and specific written approval of Seller.

IN NO EVENT SHALL SELLER BE RESPONSIBLE OR LIABLE FOR ANY SPECIAL, INDIRECT, INCIDENTAL OR CONSEQUENTIAL DAMAGES ARISING IN ANY WAY IN CONNECTION WITH ANY PRODUCTS OR THIS SALE.

The agreement of Seller to sell its products is expressly conditioned upon the Buyer's assent to, and Seller agrees to sell its products only upon, all terms and conditions set forth above and on the face hereof Buyer's acceptance of any products provided under this sale shall constitute such assent

CRTV-4

Teflon, Viton and Hypalon are trademarks of Dupont Corp.
Halar is a trademark of Ausimont, New Jersey
Asahi/America, Duo-Bloc, Omni, Labcock, Electromni, and Quarter Master are trademarks of Asahi/America, Inc.

Copyright © 1993, Asahi/America, Inc. All rights reserved Printed in USA.

19 Green Street, Malden, MA 02148 • P.O. Box 653 • Tel: (800) 343-3618 • Fax: (800) 426-7058
Tel: (617) 321-5409 • Fax: (617) 321-4421 • Internet: http://www.asahi-america.com

ASAHI/AMERICA®

A NOTE ON CHEMICAL RESISTANCE

Chemical resistance of thermoplastics is an important design issue for engineers. The first decision that is often made is the decision of what material to use for your pipe system.

Chemical resistance is also a complex issue that requires an anlysis of the compounds present, their concentrations and the temperature of the environment.

Enclosed are two documents that are intended to act as a guide to the usage of High Density Polythylene (HDPE) pipe in different chemical environments. The sample letter is an actual certification letter for an unidentified chemical stream that indicates the resistance and suitability of HDPE in dilute chemical contact. The chemical resistance chart contains data on the fully pressure rated 100% concentration (or as noted) of the chemical listed.

Fluid Controls, Inc. can provide comprehensive assistance in determining the suitability of our Fluid-Lok™ system for any application. We have comprehensive data on the applicabilty of our systems in most chemical environments. An analysis of the applicability of thermoplastics for your particular need is available from the application experts at Fluid Controls, Inc. Just call 1 800 462-0860 and ask for the Fluid-Lok™ Product Manager or our President Mr Dudley Burwell.

2323 NORTH CENTRAL EXPRESSWAY, SUITE 100
P. O. BOX 83-3866
RICHARDSON, TEXAS 75083 • 214/783-2888

LETTER OF CERTIFICATION

Phillips Driscopipe, Inc. is pleased to provide information about the use of our pipe products in leachate collection service. We have fully reviewed the attached list of leachate constituent chemicals. Also, the staff of the Plastics Technical Center of Phillips 66 Chemical Company in Bartlesville, Oklahoma has reviewed this list.

The consensus of opinion is this: Phillips Driscopipe PE 3408 pipe material is chemically compatible with a significant number of the chemicals listed, such as the elements and the organics. Some of the other chemicals, such as the aromatics and chlorinated compounds, are known to produce a slight tensile strength reduction (about 10%) in HDPE pipe when exposed in a 100% concentration for a long time. However, Driscopipe HDPE pipe has an acceptable tolerance for the PPM exposure level described for those aromatic and chlorinated chemicals listed.

In summary, Phillips Driscopipe does have chemical compatibility testing on most of the chemicals listed, but not all. For those other untested chemicals recognized as having a potential effect on polyethylene material, the preponderance of our experience and knowledge suggests the level of exposure to these chemicals, is <u>so low</u> as to be within an acceptable tolerance limit for HDPE such that there will be little or now effect on the pipe by this leachate.

In our cumulative judgement, there should be no reason why our HDPE pipe should not perform its structural or pressure function in contact with this leachate.

Sincerely,

Harvey Svetlik

Harvey Svetlik, P.E.
Senior Marketing Technical Rep.

HES/rk(3/315)
cc: R.F. Wood
W.C. Nicol
R.J. Hart

Table 1. Southern [illegible] tuent data.

PARAMETER	VALUE		APPROX.* CONC. (%)
pH	6.4		
Conductivity	4625	umhos/cm	
Totally Dissolved Solids	5595	mg/l	0.005
Silver	<0.006	mg/l	$<6 \times 10^{-9}$
Arsenic	<0.004	mg/l	$<4 \times 10^{-9}$
Barium	0.56	mg/l	$<6 \times 10^{-7}$
Cadmium	0.009	mg/l	9×10^{-9}
Chromium	<0.08	mg/l	$<8 \times 10^{-8}$
Iron	135	mg/l	0.0002
Mercury	<0.0004	mg/l	$<4 \times 10^{-10}$
Lead	0.31	mg/l	3×10^{-7}
Selenium	0.004	mg/l	4×10^{-9}
Alkalinity	3250	mg/l $CaCO_3$	0.00325 as $CaCO_3$
Chloride	324.4	mg/l	0.0003
Ammonia	71.6	mg/l as N	7×10^{-5} N_1
Sulfate	49	mg/l	5×10^{-5}
Chem. Oxygen Demand	6500	mg/l as O_2	0.007 as O_2
BOD5	465	mg/l as O_2	0.0005 as O_2
Benzene	0.010	mg/l	$<1 \times 10^{-8}$
Bromoform	<0.005	mg/l	$<5 \times 10^{-9}$
Carbon Tetrachloride	<0.005	mg/l	$<5 \times 10^{-9}$
Chlorobenzene	<0.005	mg/l	$<5 \times 10^{-9}$
Chlorodibromomethane	<0.005	mg/l	$<5 \times 10^{-9}$
Chloroethane	<0.010	mg/l	$<1 \times 10^{-8}$
2Chloroethylvinylether	<0.010	mg/l	$<1 \times 10^{-8}$
Chloroform	<0.005	mg/l	$<5 \times 10^{-9}$
Dichlorobromomethane	<0.005	mg/l	$<5 \times 10^{-9}$
1,1-Dichloroethane	<0.005	mg/l	$<5 \times 10^{-9}$
1,2-Dichloroethane	<0.005	mg/l	$<5 \times 10^{-9}$
1,1-Dichloroethylene	<0.005	mg/l	$<5 \times 10^{-9}$
1,2-Dichloropropane	<0.005	mg/l	$<5 \times 10^{-9}$
c1,3Dichlorpropylene	<0.005	mg/l	$<5 \times 10^{-9}$
t1,3Dichlorpropylene	<0.005	mg/l	$<5 \times 10^{-9}$
Ethylbenzene	0.036	mg/l	4×10^{-8}
Bromomethane	<0.010	mg/l	$<1 \times 10^{-8}$
Chloromethane	<0.010	mg/l	$<1 \times 10^{-8}$
Methylene Chloride	0.158	mg/l	2×10^{-7}
1,1,2,2Tetrachlrethane	<0.005	mg/l	$<5 \times 10^{-9}$
Tetrachloroethylene	0.026	mg/l	3×10^{-8}
Toluene	0.853	mg/l	9×10^{-8}
t1,2-Dichloroethylene	<0.005	mg/l	$<5 \times 10^{-7}$
1,1,1-Trichloroethane	0.314	mg/l	3×10^{-7}
1,1,2-Trichloroethane	<0.005	mg/l	$<5 \times 10^{-9}$
Trichloroethylene	0.024	mg/l	2×10^{-8}
Trichlorofluoromethane	0.094	mg/l	9×10^{-8}
Vinyl Chloride	<0.010	mg/l	$<1 \times 10^{-8}$

* Approximate concentrations in percent provided for comparison purposes with Tables A-1 and A-2 of Appendix A of this report.

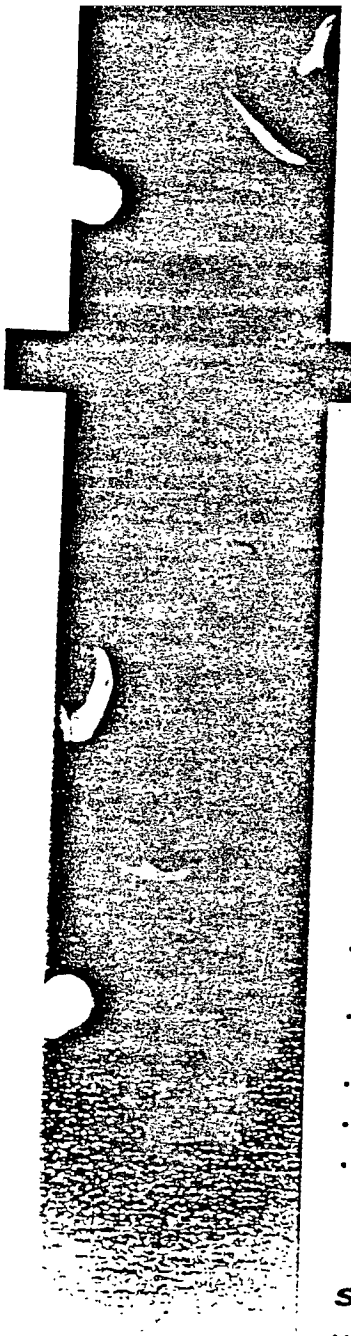

Model 400 Butt Fusion Machine

Offered in two standard configurations the IPS model has a capacity of 1" IPS through 4" IPS. The metric unit has a capacity of 25mm through 110mm. These lever operated machines come complete with an electric powered facing tool, coated heater iron,and a heater storage box. Fully equipped these machines are ready to fuse 4" IPS or 110mm HDPE-PP-PVDF pipe and fittings, depending on the configuration. Mounted on a two wheel cart, these durable lightweight machines are ready to go to work in the toughest conditions.

Optional collets can adapt the machine to fuse pipe sizes down to 1" IPS or 110mm including non-standard pipe sizes. Mitered collets are also available for the production of segmented ells in the standard machine.

Features:

- Mounted on a 2 wheel cart for easy movement.
- Clamping assembly consists of one stationary & one moving lever operated clamping ring that slides on bronze bushings and chrome plated shafts for easy operation.
- Facing unit is chain driven and powered by a heavy duty drill motor. A facer storage bracket is mounted on the machine.
- Adjustable thermostatically controlled heater iron with a durable non-stick coated surface, dial thermometer to indicate temperature and mounting arms to hold heater in position.
- The complete machine is easily removed from the cart for fusions in tight working conditions such as in ditch fusions.
- Foot operated pipe lifter assembly assists in pipe handling.
- Speed handles with thrust bearings allow quick and efficient pipe clamping.
- Machine constructed with high strength corrosion resistant alloys and assembled with plated fasteners.

Specifications:

Unit Dimensions:

Length:	49 Inches	124 cm
Width:	22.5 Inches	57 cm
Height:	30 Inches	76 cm
Weight:	140 Lbs	64 kg

Capacities:

Model 400	1" IPS thru 4" IPS*
Model 400-110mm	25mm thru 110mm*

Electrical Data:

120 VAC Configuration

Total Power Consumption - 120 VAC, 18 Amps, 2,160 Watts
Facing Tool - 120 VAC, 5 Amps, 600 Watts
Heater Iron - 120 VAC, 13 Amps, 1,560 Watts

240 VAC Configuration

Total Power Consumption - 240 VAC, 11 Amps, 2,640 Watts
Facing Tool - 240 VAC, 4 Amps, 960 Watts
Heater Iron - 240 VAC, 7 Amps, 1,680 Watts

*with the use of optional reducing collets.

Specifications subject to change without notice!

CHRISTIE MANUFACTURING INC.

Model 810 Butt Fusion Machine

Offered in two standard configurations the IPS model has a capacity of 2" IPS through 8" IPS. The metric unit has a capacity of 63mm through 225mm. These machines come complete with an electirc powered facing tool mounted to the machine, a hand powered hydraulic pump with gauge, coated heater iron, heater storage box, and a pair of pipe stands. Fully equipped these machines are ready to fuse 8" IPS or 225mm HDPE-PP-PVDF pipe and fittings, depending on the configuration. Mounted on a four wheel wagon, these durable lightweight machines are ready to go to work in the toughest conditions.

Optional collets can adapt the machine to fuse pipe sizes down to 2" IPS or 63mm including non-standard pipe sizes. Mitered collets are also available for the production of segmented ells in the standard machine. Other options include stub end holder, side wall fusion adapter and an electric hydraulic package.

Features:

- Rugged fusion machine is mounted on a 4 wheel cart with steerable front axle.
- Clamping assembly consists of two stationary and two moving hydraulically assisted moving clamping rings powered by a dual action hydraulic hand pump with gauge.
- Facing unit is attached to the machine with a removable mounting shaft, chain driven and powered by a heavy duty 1.5 HP drill motor.
- Adjustable thermostatically controlled heater iron with a durable non-stick coated surface and a dial thermometer.
- The complete machine is easily removed from the cart for fusions in tight working conditions such as in ditch fusions.
- Rear mounted pipe lifter assembly assists in pipe handling.
- Speed handles with thrust bearings allow quick and efficient pipe clamping.
- Machine constructed with high strength corrosion resistant alloys and assembled with plated fasteners.

Specifications:

Distributed By:

Unit Dimensions:

Length:	55 Inches	140 cm
Width:	34.5 Inches	88 cm
Height:	29.5 Inches	76 cm
Weight:	266 Lbs	121 kg

Capacities:

Model 810	2" IPS thru 8" IPS*
Model 810-225mm	63mm thru 225mm*

Electrical Data:

120 VAC Configuration

Total Power Consumption - 120 VAC, 27 Amps, 3,200 Watts

Facing Tool - 120 VAC, 10 Amps, 1,200 Watts

Heater Iron - 120 VAC, 17 Amps, 2,000 Watts

240 VAC Configuration

Total Power Consumption - 240 VAC, 14 Amps, 3,200 Watts

Facing Tool - 240 VAC, 5 Amps, 1,200 Watts

Heater Iron - 240 VAC, 9 Amps, 2,000 Watts

CHRISTIE MANUFACTURING INC.

Specifications subject to change without notice!

*with the use of optional reducing collets

Model 1410 Butt Fusion Machine

Offered in two standard configurations the IPS model has a capacity of 2" IPS through 14" IPS. The metric unit has a capacity of 63mm through 355mm. These machines come complete with an electric powered facing tool mounted to the machine, a hand powered hydraulic pump with gauge, coated heater iron, heater storage box, and a pair of pipe stands. Fully equipped these machines are ready to fuse 14" IPS or 355mm HDPE-PP-PVDF pipe fittings, depending on the configuration. Mounted on a four wheel wagon, these durable lightweight machines are ready to go to work in the toughest conditions.

Optional collets can adapt the machine to fuse pipe sizes down to 2" IPS or 63mm including non-standard pipe sizes. Mitered collets are also available for the production of segmented ells in the standard machine. Other options include stub end holder, side wall fusion adapter and an electric hydraulic package.

Features:

- Rugged fusion machine is mounted on a 4 wheel cart with steerable front axle.
- Clamping assembly consists of two stationary & two moving hydraulically assisted moving clamping rings powered by a dual action hydraulic hand pump with gauge.
- Facing unit is attached to the machine with a removable mounting shaft, chain driven and powered by a heavy duty 1.5 HP drill motor.
- Adjustable thermostatically controlled heater iron with a durable non-stick coated surface.
- The complete machine is easily removed from the cart for fusions in tight working conditions such as in ditch fusions.
- Rear mounted pipe lifter assembly assists in pipe handling.
- Speed handles with thrust bearings allow quick and efficient pipe clamping.
- Machine constructed with high strength corrosion resistant alloys and assembled with plated fasteners.

Specifications:

Unit Dimensions:

Length:	72 Inches	183 cm
Width:	44 Inches	112 cm
Height:	38 Inches	97 cm
Weight:	505 Lbs	229 kg

Capacities:

Model 1410	2" IPS thru 14" IPS*
Model 1410-355mm	63mm thru 355mm*

Electrical Data:

120 VAC Configuration

Total Power Consumption - 120 VAC, 31 Amps, 3,720 Watts

Facing Tool - 120 VAC, 10 Amps, 1,200 Watts

Heater Iron - 120 VAC, 21 Amps, 2,520 Watts

240 VAC Configuration

Total Power Consumption - 240 VAC, 16 Amps, 3,840 Watts

Facing Tool - 240 VAC, 5 Amps, 1,200 Watts

Heater Iron - 240 VAC, 11 Amps, 2,640 Watts

*with the use of optional reducing collets.

Specifications subject to change without notice!

Distributed By:

CHRISTIE MANUFACTURING INC.

CHEMICAL RESISTANCE OF DRISCOPIPE

S – Satisfactory
U – Unsatisfactory
M – Marginal
N – Not known

All concentrations are 100% unless noted otherwise.

On reagents marked marginal, chemical attack will be recognized by a loss of physical properties of the pipe which may require a change in design factors.

Reagent	70°F (21°C)	140°F (60°C)
Acetic Acid 1-10%	S	S
Acetic Acid 10-50%	S	M
Acetic Acid 50-100%	S	M
Acetone	M	U
Acrylic Emulsions	S	S
Aluminum Chloride–Dilute	S	S
Aluminum Chloride Conc.	S	S
Aluminum Fluoride Conc.	S	S
Aluminum Sulfate Conc.	S	S
Alums (All Types) Conc.	S	S
Ammonia 100% Dry Gas	S	S
Ammonium Carbonate	S	S
Ammonium Chloride Satd	S	S
Ammonium Fluoride 20%	S	S
Ammonium Hydroxide 0.88 S.G.	S	S
Ammonium Metabisulfite Satd	S	S
Ammonium Nitrate Satd	S	S
Ammonium Persulfate Satd	S	S
Ammonium Sulfate Satd	S	S
Ammonium Sulfide Satd	S	S
Ammonium Thiocyanate Satd	S	S
Amyl Acetate	M	U
Amyl Alcohol 100%	S	S
Amyl Chloride 100%	N	U
Aniline 100%	S	N
Antimony Chloride	S	S
Aqua Regia	U	U
Barium Carbonate Satd	S	S
Barium Chloride	S	S
Barium Hydroxide	S	S
Barium Sulfate Satd	S	S
Barium Sulfide Satd	S	S
Beer	S	S
Benzene	M	U
Benzene Sulfonic Acid	S	S
Bismuth Carbonate Satd	S	S
Bleach Lye 10%	S	S
Black Liquor	S	S
Borax Cold Satd	S	S
Boric Acid Dilute	S	S
Boric Acid Conc.	S	S
Bromic Acid 10%	S	S
Bromine Liquid 100%	M	U
Butanediol 10%	S	S
Butanediol 60%	S	S
Butanediol 100%	S	S
Butyl Alcohol 100%	S	S
Calcium Bisulfide	S	S
Calcium Carbonate Satd	S	S
Calcium Chlorate Satd	S	S
Calcium Chloride Satd	S	S
Calcium Hydroxide	S	S
Calcium Hypochlorite ELGH Sol.	S	S
Calcium Nitrate 50%	S	S
Calcium Sulfate	S	S
Camphor Oil	N	U
Carbon Dioxide 100% Dry	S	S
Carbon Dioxide 100% Wet	S	S
Carbon Dioxide Cold Satd	S	S
Carbon Disulfide	N	U
Carbon Monoxide	S	S
Carbon Tetrachloride	M	U
Carbonic Acid	S	S
Castor Oil Conc.	S	S
Chlorine Dry Gas 100%	S	M
Chlorine Moist Gas	M	U
Chlorine Liquid	M	U
Chlorobenzene	M	U
Chloroform	M	U
Chlorosulfonic Acid 100%	M	U
Chrome Alum Satd	S	S
Chromic Acid 20%	S	S
Chromic Acid Up to 50%	S	S
Chromic Acid and Sulfuric Acid	S	M
Cider	S	S
Citric Acid Satd	S	S
Coconut Oil Alcohols	S	S
Cola Concentrates	S	S
Copper Chloride Satd	S	S
Copper Cyanide Satd	S	S
Copper Fluoride 2%	S	S
Copper Nitrate Satd	S	S
Copper Sulfate Dilute	S	S
Copper Sulfate Satd	S	S
Cottonseed Oil	S	S
Crude Oil*	S	M
Cuprous Chloride Satd	S	S
Cyclohexanol	S	S
Cyclohexanone	M	U
Detergents Synthetic	S	S
Developers, Photographic	S	S
Dextrin Satd	S	S
Dextrose Satd	S	S
Dibutylphthalate	S	M
Disodium Phosphate	S	S
Diazo Salts	S	S
Diethylene Glycol	S	S
Diglycolic Acid	S	S
Dimethylamine	M	U
Emulsions, Photographic	S	S
Ethyl Acetate 100%	M	U
Ethyl Alcohol 100%	S	S
Ethyl Alcohol 35%	S	S
Ethyl Butyrate	M	U
Ethyl Chloride	M	U
Ethyl Ether	U	U
Ethylene Chloride	U	U
Ethylene Chlorohydrin	U	U
Ethylene Dichloride	M	U
Ethylene Glycol	S	S
Ferric Chloride Satd	S	S
Ferric Nitrate Satd	S	S
Ferrous Chloride Satd	S	S
Ferrous Sulfate	S	S
Fish Solubles	S	S
Fluoboric Acid	S	S
Fluorine	S	U
Fluosilicic Acid 32%	S	S
Fluosilicic Acid Conc.	S	S
Formaldehyde 40%	S	N
Formic Acid 0-20%	S	S
Formic Acid 20-50%	S	S
Formic Acid 100%	S	S
Fructose Satd	S	S
Fruit Pulp	S	S
Fuel Oil	S	U
Furfural 100%	M	U
Furfuryl Alcohol	M	U
Gallic Acid Satd	S	S
Gas Liquids*	S	M
Gasoline*	M	U
Gin	S	U
Glucose	S	S
Glycerine	S	S
Glycol	S	S
Glycolic Acid 30%	S	S
Grape Sugar Satd Aq.	S	S
Hexanol, Tert.	S	S
Hydrobromic Acid 50%	S	S
Hydrocyanic Acid Satd	S	S
Hydrochloric Acid 10%	S	S
Hydrochloric Acid 30%	S	S
Hydrochloric Acid 35%	S	S
Hydrochloric Acid Conc.	S	S
Hydrofluoric Acid 40%	S	S
Hydrofluoric Acid 60%	S	S
Hydrofluoric Acid 75%	S	S
Hydrogen 100%	S	S
Hydrogen Bromide 10%	S	S
Hydrogen Chloride Gas Dry	S	S

*HDPE Resin Service Design Factor for hydrocarbons per the formula on page 3 and 8 is F = 0.25 to compensate for hydrocarbon saturation effects on long term hydrostatic strength.

continued on page 10

continued from page 9

CHEMICAL RESISTANCE OF DRISCOPIPE

Reagent	70°F (21°C)	140°F (60°C)
Hydrogen Peroxide 30%	S	S
Hydrogen Peroxide 90%	S	M
Hydrogen Phosphide 100%	S	S
Hydroquinone	S	S
Hydrogen Sulfide	S	S
Hypochlorus Acid Conc.	S	S
Inks	S	S
Iodine (Alc. Sol.) Conc.	S	U
Lactic Acid 10%	S	S
Lactic Acid 90%	S	S
Latex	S	S
Lead Acetate Sat'd	S	S
Lube Oil*	S	M
Magnesium Carbonate Sat'd	S	S
Magnesium Chloride Sat'd	S	S
Magnesium Hydroxide Sat'd	S	S
Magnesium Nitrate Sat'd	S	S
Magnesium Sulfate Sat'd	S	S
Mercuric Chloride Sat'd	S	S
Mercuric Cyanide Sat'd	S	S
Mercurous Nitrate Sat'd	S	S
Mercury	S	S
Methyl Alcohol 100%	S	S
Methyl Bromide	M	U
Methyl Chloride	M	U
Methyl Ethyl Ketone 100%	M	U
Methylsulfuric Acid	S	S
Methylene Chloride 100%	M	U
Milk	S	S
Mineral Oils	S	U
Molasses Comm.	S	S
Nickel Chloride Sat'd	S	S
Nickel Nitrate Conc.	S	S
Nickel Sulfate Sat'd	S	S
Nicotine Dilute	S	S
Nicotinic Acid	S	S
Nitric Acid 0-30%	S	S
Nitric Acid 30-50%	S	M
Nitric Acid 70%	S	M
Nitric Acid 95-98%	U	U
Nitrobenzene 100%	U	U
Octyl Cresol	S	U
Oils and Fats*	S	M
Oleic Acid Conc.	S	U
Oleum Conc.	U	U
Orange Extract	S	S
Oxalic Acid Dilute	S	S
Oxalic Acid Sat'd	S	S
Ozone 100%	S	U
Perchloric Acid 10%	S	S
Petroleum Ether	U	U
Phenol 90%	U	U
Phosphoric Acid Up to 30%	S	S
Phosphoric Acid Over 30%	S	S
Phosphoric Acid 90%	S	S

Reagent	70°F (21°C)	140°F (60°C)
Phosphorus (Yellow) 100%	S	N
Phosphorus Pentoxide 100%	S	N
Photographic Solutions	S	S
Pickling Baths		
Sulfuric Acid	S	S
Hydrochloric Acid	S	S
Sulfuric-Nitric	S	U
Plating Solutions		
Brass	S	S
Cadmium	S	S
Chromium	N	N
Copper	S	S
Gold	S	S
Indium	S	S
Lead	S	S
Nickel	S	S
Rhodium	S	S
Silver	S	S
Tin	S	S
Zinc	S	S
Potassium Bicarbonate Sat'd	S	S
Potassium Borate 1%	S	S
Potassium Bromate 10%	S	S
Potassium Bromide Sat'd	S	S
Potassium Carbonate	S	S
Potassium Chlorate Sat'd	S	S
Potassium Chloride Sat'd	S	S
Potassium Chromate 40%	S	S
Potassium Cyanide Sat'd	S	S
Potassium Dichromate 40%	S	S
Potassium Ferri/ Ferro Cyanide Sat'd	S	S
Potassium Fluoride	S	S
Potassium Hydroxide 20%	S	S
Potassium Hydroxide Conc.	S	S
Potassium Nitrate Sat'd	S	S
Potassium Perborate Sat'd	S	S
Potassium Perchlorate 10%	S	S
Potassium Sulfate Conc.	S	S
Potassium Sulfide Conc.	S	S
Potassium Sulfite Conc.	S	S
Potassium Persulfate Sat'd	S	S
Propargyl Alcohol	S	S
Propyl Alcohol	S	S
Propylene Dichloride 100%	U	U
Propylene Glycol	S	S
Rayon Coagulating Bath	S	S
Sea Water	S	S
Selenic Acid	S	S
Shortening	S	S
Silicic Acid	S	S
Silver Nitrate Sol.	S	S
Soap Solution Any Conc'n	S	S
Sodium Acetate Sat'd	S	S
Sodium Benzoate 35%	S	S

Reagent	70°F (21°C)	140°F (60°C)
Sodium Bicarbonate Sat'd	S	S
Sodium Bisulfate Sat'd	S	S
Sodium Bisulfite Sat'd	S	S
Sodium Borate	S	S
Sodium Bromide Dilute Sol.	S	S
Sodium Carbonate Con.	S	S
Sodium Carbonate	S	S
Sodium Chlorate Sat'd.	S	S
Sodium Chloride Sat'd	S	S
Sodium Cyanide	S	S
Sodium Dichromate Sat'd	S	S
Sodium Ferricyanide	S	S
Sodium Ferrocyanide Sat'd	S	S
Sodium Fluoride Sat'd	S	S
Sodium Hydroxide Conc.	S	S
Sodium Hypochlorite	S	S
Sodium Nitrate	S	S
Sodium Sulfate	S	S
Sodium Sulfide 25%	S	S
Sodium Sulfide Sat'd Sol.	S	S
Sodium Sulfite Sat'd	S	S
Stannous Chloride Sat'd	S	S
Stannic Chloride Sat'd	S	S
Starch Solution Sat'd	S	S
Stearic Acid 100%	S	S
Sulfuric Acid 0-50%	S	S
Sulfuric Acid 70%	S	M
Sulfuric Acid 80%	S	U
Sulfuric Acid 95%	M	U
Sulfuric Acid 98%	M	U
Sulfuric Acid, Fuming	U	U
Sulfurous Acid	S	S
Tallow*	S	M
Tannic Acid 10%	S	S
Tanning Extracts Comm.	S	S
Tartaric Acid Sat'd	N	N
Tetrahydrofurane	N	U
Titanium Tetrachloride Sat'd	N	U
Toluene	M	U
Transformer Oil	S	M
Trisodium Phosphate Sat'd	S	S
Trichloroethylene	U	U
Urea Up to 30%	S	S
Urine	S	S
Vinegar Comm.	S	S
Vanilla Extract	S	S
Wetting Agents	S	S
Whiskey	S	N
Wines	S	S
Xylene	M	U
Yeast	S	S
Zinc Chloride Sat'd	S	S
Zinc Sulfate Sat'd	S	S

For additional chemical resistance listings, consult the P.P.I. technical report #TR 19/10-84, Table I

TRANSVECTORS FROM VORTEC

- Use for efficient finish drying
- Connect to compressed air source

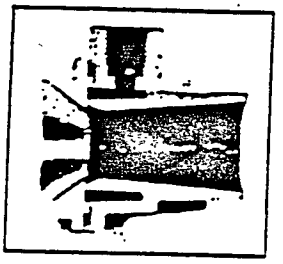

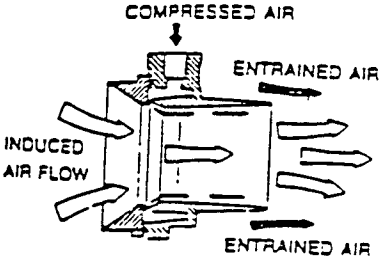

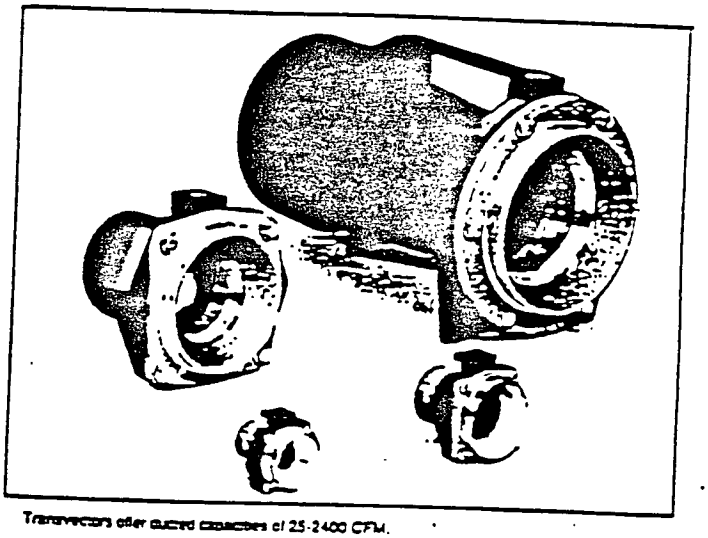

Transvectors offer ducted capacities of 25-2400 CFM.

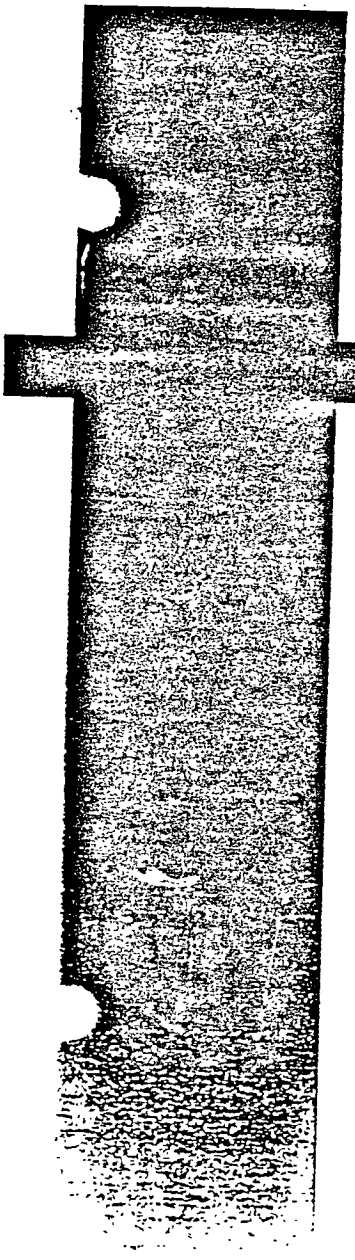

Model 1810 Butt Fusion Machine

This field proven fusion jig offers a rapid precise means of fusing large diameter pipe and fittings. The unit comes with a hydraulic powered facing tool, dual zone heater iron for accurate temperature control, rear mounted hydraulic pipe lifter, a pair of pipe stands, and a 50 ft. power cable. Offered in two standard configurations the IPS model has a capacity of 18" IPS through 8" IPS. The metric unit has a capacity of 450mm through 225mm. These machines are ready to fuse 18" IPS or 450mm HDPE-PP-PVDF pipe and fittings, depending on the configuration.

Optional reducing collets can adapt the machines to fuse pipe sizes down to 8" IPS or 225mm including non-standard pipe sizes. Mitered collets are also available for the production of segmented ells in the standard machine. Other options include stub end holder, hydraulic clamping package and micro processor heater control.

Features:

- Machine is mounted on a 4 wheel cart with steerable front axle.
- An electrically driven hydraulic pump that supplies power to the carriage, facing unit, accessory slide and rear mounted pipe lifter. Individual pressure zones allow presetting of the facing, heating and fusion cycles.
- Exact positioning of the pipe sections is obtained with four adjustable clamps. The clamping assembly consists of two stationary and two hydraulically traversing clamping rings.
- Powerful hydraulically operated facing unit provides quick facing of heavy wall pipe. The facer pivots away from work area and floats on a hydraulic positioning cylinder for easy operation.
- The adjustable dual zone heater has a durable non-stick coated surface and thermometer to indicate temperature. Heater also pivots away from work area and floats on the hydraulic operated positioning carriage.
- Rear mounted hydraulic pipe lifter assembly assists in pipe handling.
- Speed handles with thrust bearings allow quick and efficient pipe clamping.
- Machine constructed with high strength corrosion resistant alloys and assembled with plated fasteners.

Specifications:

Distributed By:

Unit Dimensions:

Length:	88 Inches	209 cm
Width:	59 Inches	150 cm
Height:	44 Inches	122 cm
Weight:	2,500 Lbs	996 kg

Capacities:

Model 1810	8" IPS thru 18" IPS*
Model 1810-450mm	225mm thru 450mm*

Electrical Data:

240 VAC 3 Phase Configuration**

Total Power Consumption - 240 VAC, 27 Amps, 11,203 Watts

Electric Motor - 5 HP, 240 VAC, 14 Amps, 5,800 Watts

Facing Unit - Hydraulically powered

Heater Iron - 240 VAC, 5,403 Watts, 13 Amps

CHRISTIE MANUFACTURING INC.

**Single Phase & other configurations available

* with the use of optional reducing collets.

Specifications subject to change without notice!

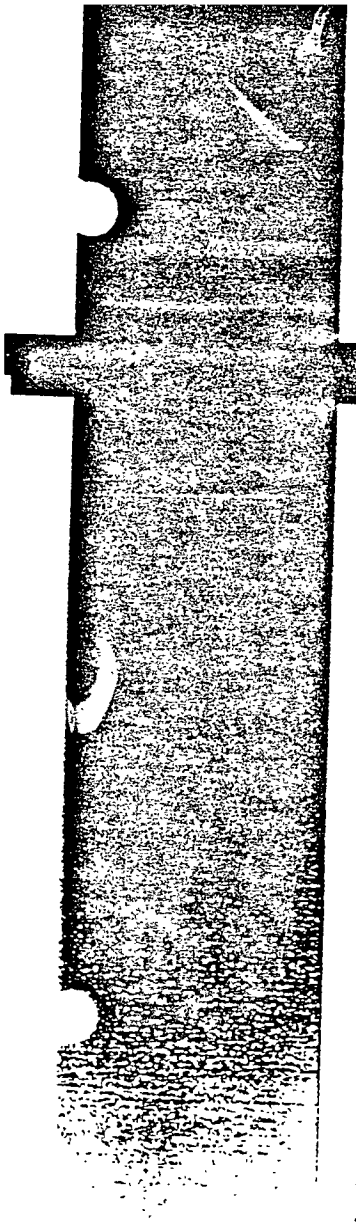

Model 2410 Butt Fusion Machine

This field proven fusion jig offers a rapid precise means of fusing large diameter pipe and fittings. The unit comes with a hydraulic powered facing tool, dual zone heater iron for accurate temperature control, rear mounted hydraulic pipe lifter, a pair of pipe stands, and a 50 ft. power cable. Offered in two standard configurations the IPS model has a capacity of 24" IPS through 10" IPS. The metric unit has a capacity of 630mm through 250mm. These machines are ready to fuse 24" IPS or 630mm HDPE-PP-PVDF pipe and fittings, depending on the configuration.

Optional reducing collets can adapt the machines to fuse pipe sizes down to 10" IPS or 250mm including non-standard pipe sizes. Mitered collets are also available for the production of segmented ells in the standard machine. Other options include stub end holder, hydraulic clamping package and micro processor heater control.

Features:

- Machine is mounted on a 4 wheel cart with steerable front axle.
- An electrically driven hydraulic pump that supplies power to the carriage, facing unit, accessory slide and rear mounted pipe lifter. Individual pressure zones allow presetting of the facing, heating and fusion cycles.
- Exact positioning of the pipe sections is obtained with four adjustable clamps. The clamping assembly consists of two stationary and two hydraulically traversing clamping rings.
- Powerful hydraulically operated facing unit provides quick facing of heavy wall pipe. The facer pivots away from work area and floats on a hydraulic positioning cylinder for easy operation.
- The adjustable dual zone heater has a durable non-stick coated surface and thermometer to indicate temperature. Heater also pivots away from work area and floats on the hydraulic operated positioning carriage.
- Rear mounted hydraulic pipe lifter assembly assists in pipe handling.
- Speed handles with thrust bearings allow quick and efficient pipe clamping.
- Machine constructed with high strength corrosion resistant alloys and assembled with plated fasteners.

Specifications:

Distributed By:

Unit Dimensions:

Length:	100 Inches	254 cm
Width:	62 Inches	158 cm
Height:	48 Inches	122 cm
Weight:	2,700 Lbs	1,225 kg

Capacities:

Model 2410	10" IPS thru 24" IPS*
Model 2410-630mm	250mm thru 630mm*

Electrical Data:

*240 VAC 3 Phase Configuration***

Total Power Consumption - 240 VAC, 29 Amps, 12,054 Watts

Electric Motor - 5 HP, 240 VAC, 14 Amps, 5,819 Watts

Facing Unit - Hydraulically powered

Heater Iron - 240 VAC, 6,235 Watts, 15 Amps

**Single Phase & other configurations available.
*with the use of optional reducing collet.

CHRISTIE MANUFACTURING INC

Specifications subject to change without notice!

SOCKET FUSION TOOLS

Christie Socket Fusion Tools provide simultaneous heating on the external surface of the pipe and the internal surface of the fitting. At fusion temperature, the pipe is inserted into the fitting and allowed to cool.

These tools feature a heater with adjustable thermostat, combination chamfering tool and depth gauge, heater faces, and a cold ring.

SPECIFICATIONS

Electrical:
110-125 Vac, 1000-1800 W, 9-16 A
(available for DC power on special order)

Temperature:
Temperature, heating, and cooling time determined by pipe manufacturer's specifications.

SIZES:
1/2-inch CTS to 4-inch IPS

J.W. "BILL" CHRISTIE INC.

CHRISTIE TOOLS

1107 E. Main Frisco, Texas 75034 Frisco 214-377-2444 Dallas 214-243-0444

SERVICE SADDLE TOOLS

Christie Service Saddle Tools permit fusion of a saddle anywhere along the pipe length. A precision tapping function is achieved for the pipe may be tapped without removing the fitting.

The tools include a heater with adjustable thermostat, a set of service saddle faces (1 1/4-inch IPS to 8-inch main IPS), or, a set of combination heater faces (1 1/4-inch IPS to 6-inch IPS main and 1/2-inch CTS to 1 1/4-inch IPS service), a tapping and test tool, and a pipe rounding and straightening tool.

SPECIFICATIONS

Electrical:
110-125 Vac, 1000-2500 W, 9-15 A (DC power is available on special order)

Temperature:
Temperature, heating and cooling is determined by the pipe manufacturer's specifications.

Sizes:
Main sizes: 1 1/4-inch IPS to 8-inch IPS
Service sizes: 1/20-inch CTS to 1 1/4-inch IPS

J.W. "BILL" CHRISTIE INC.
CHRISTIE TOOLS

1107 E. Main Frisco, Texas 75034 Frisco 214-377-2111 Dallas 214-248-0111

BRANCH SADDLE FUSION TOOLS

Installation of a branch saddle anywhere along a length of pipe is simple and precise when using the Christie Branch Saddle Fusion Tools.

And, the pipe can be tapped right through the fitting for exact fit.

The tools include a heater with adjustable thermostat, a set of heater faces, branch saddle holder, tapping and test tool and a branch saddle fusion unit.

SPECIFICATIONS

Electrical:
110-125 Vac, 1000-1500 W, 9-15 A
(for up to 6-inch main size)
110-125 Vac, 2500 W, 20 A
(for larger main sizes)
(Both available for DC power on special order)

Temperature:
Temperature, heating and cooling according to pip manufacturer's specifications.

Size:
1¼-inch to 12-inch IPS

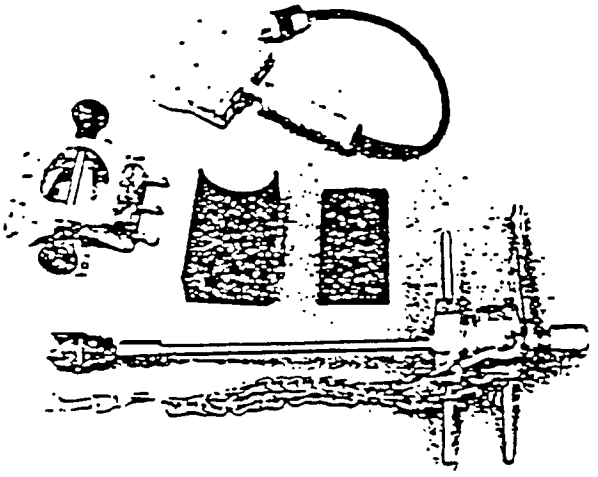

J.W. "BILL" CHRISTIE INC.
CHRISTIE TOOLS

1107 E. Main Frisco, Texas 75034 Frisco 214-377-2111 Dallas 214-248-0111

APPLICATION NOTES - DRYING DOUBLE CONTAINMENT PIPE

Sources of moisture in the annulus of a double containment piping system are:

- Ground water
- Residual moisture from construction (water, mud...)
- Condensation from ambient air

The latter two are considered contaminants because they mask the presence of ground water inside the containment and thus hamper detection. Therefore the pre-requisite for double containment pipe leak detection is that the annulus be free of moisture.

Hygroscopic materials (dirt, dust) must be kept out of the containment because they make it even more difficult to remove residual moisture.

One particularly less understood and therefor sometimes frustrating form of water is condensation. Condensation tends to move around and is therefore very difficult to localize.

Condensation can be formed from residual moisture left behind after construction, or more commonly, from ambient moisture.

Ambient moisture can enter the annulus through thermal cycling. Fluids circulating through the carrier pipe can change the annulus temperature. When the pipe temperature drops, the air contained in the annulus contracts. The vacuum causes ambient air to be sucked in along with ambient moisture through any available opening in the containment. A fraction of this moisture condensates inside. Alternately, when the pipe temperature rises, thermal expansion of the air inside the annulus forces a pressure build up which causes air to escape, leaving residual condensation behind. This cycle causes a gradual moisture build up, which eventually produces enough condensate to create a puddle at low points and hence cause leak detection alarms.

The key to preventing condensation is to trap dry air inside the containment and to ensure that the containment is fully sealed.

The steps involved are:

1. Remove the moisture by <u>circulating warm air</u> through the annulus. The best way to accomplish this is to suck air out using air flow amplifiers (Vortec Transvector™) (1) at one port, and bring in warm air at the other. This will evaporate out any residual water from the containment.

2. Since the warm air does contain some moisture, it must be replaced by a dry medium. Therefore, after hot air drying, switch to dry air.

Dry air can be obtained as instrument air, usually -20°F dew point. The dew point temperature can be checked with instruments such as the Alnor Dewpointer™ (2). While injecting dry air at one end, monitor the dew point at the opposite port.

If lower dew point temperatures up to -40°F are required, use Adsorbent dryer cartridges such as the Van Air silica gel disposable cartridges (3). These Silica gel cartridges have limited absorption capacities and should therefore only be used at this stage. Do not attempt to remove large amounts of moisture using these type of cartridges.

Nitrogen blankets can be used instead of dry air and are very effective. Again, the moisture content must be monitored to ensure that all the moist air has been replaced.

3. Finally, the containment must be sealed. Be especially careful in the selection of containment closures, access ports and end seals. Some are designed to provide a flood barrier, but not intended to seal against small pressure differentials. Check with the manufacturer. Use the TraceTek TT-PFT-3/4-MC bulkhead fitting to transition leak detection cable through the containment. The containment must be pressure tested with all fittings in place. Air pressure tests up to 5 psi for 24 hours are recommended.

PVH 1/20/92

TRANSVECTORS FROM VORTEC

- Use for efficient finish drying
- Connect to compressed air source

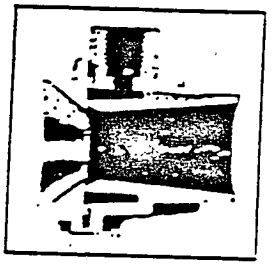

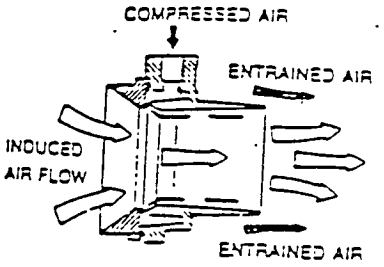

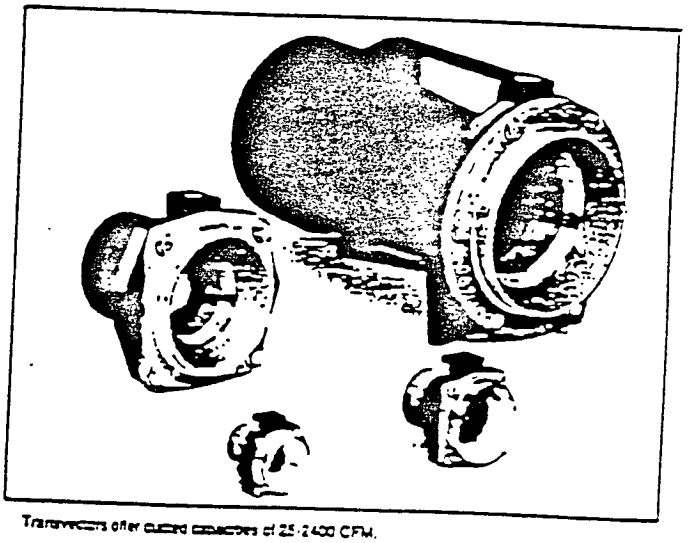

Transvectors offer custom capacities of 25-2400 CFM.

IS IT CONDENSATE

OR

IS IT A LEAK?

CONDENSATE IN DOUBLE CONTAINMENT SYSTEMS

One of the most often heard comments from installing contractors when it comes to leaks in double containment systems is, "That water in the pipe is from condensate. There is nothing that we can do about it." To settle the argument about the amount of water in a particular sealed system that can be attributed to condensate we offer the following analysis.

The amount of water (condensate) in any given volume of air is determined by three things: (1) The relative humidity. (2) The temperature of the air at the time it entered the containment area. (3) And the final (lower) temperature of the air after cooling. The formula for calculating this can be quite involved but if we assume the worst case condition the formula is much simpler.

ASSUMPTIONS: If we assume the air entered the interstitial space on a hot summer day with temperature of 95 deg f at 100% relative humidity and we could cool it to a point that all the water condensed out then the formula reduces to the following:

1)

$$W_{oz} = \frac{W_s \times V_a}{V_s \times .0652_{lb/ozwater}}$$

Where: W_{oz} = Amount of water in ounces, W_s = Humidity Ratio, V_a = Volume of Air in System, V_s = Specific Volume of Saturated Air, .0652 = specific Weight of Water in lbs/liq oz.

At 95°f W_s = .036757 lb water/lb of dry air. V_s = 14.804 cubic ft/lb of saturated air.[1] Therefore:

2)

$$W_{oz} = .036757\,lbwater/lbdryair \times \frac{V_a}{14.804\,ft^3/lbdryair \times .0652\,lb/oz}$$

3)

$$W_{oz} = .038_{ozwater/ft^3} \times V_a$$

---

[1] 1989 ASHRAE HANDBOOK, FUNDAMENTALS, IP Edition, American Society of Heating, Refrigerating and Air Conditioning Engineers, inc., Atlanta, GA, 1989, p. 6.4.

EXAMPLE 1 - DOUBLE CONTAINMENT PIPE

With 500 ft of 6" containment pipe with two (2) 2" pipes as carriers we have the following:

4)

$$V_a = V_{6''pipe} - 2 \times V_{2''pipe}$$

5)

$$V_a = 3.14 \times (.25ft)^2 \times 500ft - 2(3.14 \times (.0833ft)^2 \times 500ft)$$

6)

$$V_a = 76.4ft^3$$

By inserting this information into equation 3 we have:

7)

$$W_{oz} = .038 \times 76.4 = 2.9_{ozwater}$$

EXAMPLE 2 - 10,000 GAL DOUBLE CONTAINMENT TANK

The volume of the interstitial space equals (Simplified formula): The surface area of the tank times the width of the interstitial space. With a 10,000 gal tank: Tank radius = 4.04 ft, Interstitial width = 1 inch or .167 ft, Length = 27.5 ft.

8)

$$V_a = 2 \times 3.14 \times 4.04ft \times (4.04ft + 27.5ft) \times .167ft$$

9)

$$V_a = 133.6ft^3$$

Again by inserting this information into equation 3 we have:

10)

$$W_{oz} = .038 \times 133.6 = 5.08_{ozwater}$$

DRISCOPIPE
TECHNICAL NOTES
PHILLIPS DRISCOPIPE, INC.
A SUBSIDIARY OF PHILLIPS 66

PDI TN-33
February 15, 1993

HDPE FLANGING FOR INDUSTRIAL AND AWWA PIPE APPLICATIONS

INTRODUCTION

Ordinary steel flanges use gaskets to create a static seal between themselves to contain variable pressure over a temperature range. Steel Flanges need gaskets to accommodate flatness and machining tolerances, damage or scarring to the metal seal surface, and to accommodate corrosion/erosion of the steel surface during pressurized operation.

Polyethylene flanges do not require gaskets. The use of 1/8" thick rubber gaskets (60-70 durometer Shore A) is optional; but metal Van-Stone type (slip-on) flange rings are required.

The most common method of effecting a seal in a flanged joint is by compression force normally applied through evenly torqued bolts. As the PE flange faces are compressed and a pre-load is imposed, the PE is forced into parallelism and flatness by compressive strain; which also forces the "compliant" plastic into any imperfections between the mating surfaces preventing the escape of confined fluids. Because PE does not rust, rot, pit or corrode, no gaskets are required to handle these corrosion concerns.

Three factors must be considered when effecting a satisfactory seal:

1. Sufficient force must be available to initially "seat" the PE flange faces by providing an even compressive strain to "flow" the compliant PE into any imperfections of the seal surface.
2. Sufficient residual compressive stress (ie: after stress-relaxation) must exist in the PE flange face between the steel flange rings to ensure that under operating conditions, the residual sealing force will exceed the fluid pressure force to prevent blow-by or radial leakage.
3. The PE flange connection must be able to withstand radial pressure, axial tension/shear, and thermal cycling/movement over the temperature range to which this closure will be exposed.

Flange Bolt Torques

The bolts should be torqued to provide 2% to 3% compressive strains in the PE flange face thickness establishing a residual compressive stress. The flowing torque values and procedures are recommended:

Table #1: Torque Values

Nominal Pipe Size - inches	Lubricated Bolts ft-lbs	Dry Bolt ft-lbs
2 through 12	45	35
14 through 24	60	60
28 through 36	75	75
42 through 48	100	100

DRISCOPIPE FLANGES
Bolt Tightening Sequence

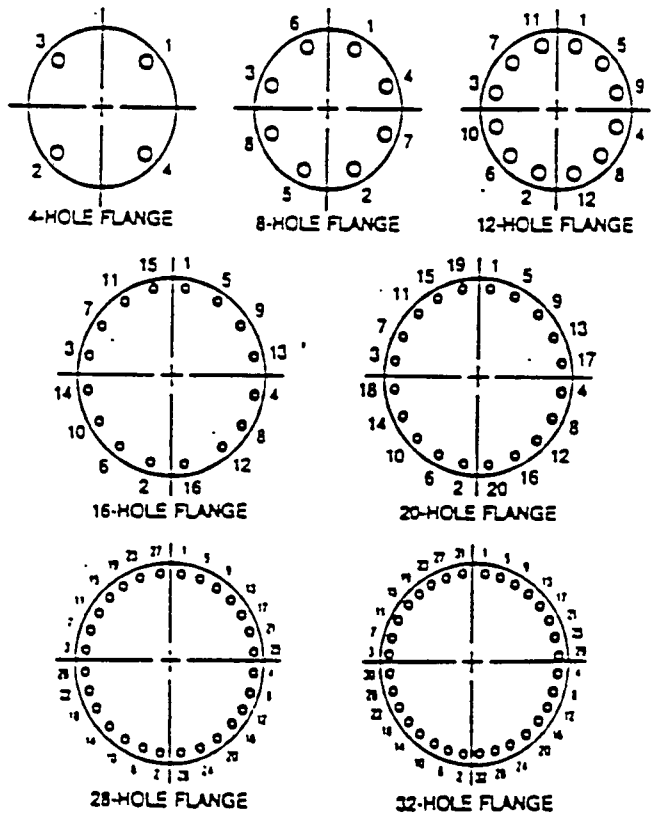

Table #2
Flange Rating: Class 150

Pipe Size	Bolt Size	Number of Bolts
2"	5/8"	4
2½"	5/8"	4
3"	5/8"	4
4"	5/8"	8
6"	3/4"	8
8"	3/4"	8
10"	7/8"	12
12"	7/8"	12
14"	1"	12
16"	1"	16
18"	1 1/8"	16
20"	1 1/8"	20
22"	1¼"	20
24"	1¼"	20
28"	1½"	28
30"	1½"	28
32"	1½"	28
36"	1½"	32
42"	1½"	36
48"	1½"	44

Bolting Procedures:

1) Grease all bolts and nuts with a suitable grease.
2) Finger tighten all nuts.
3) With a torque wrench, using the criss-cross sequential method, tighten each bolt to above listed torque.
4) After 24-30 hours (or a temperature cycle or a pressure cycle) the torque for each bolt shall be checked and those falling below the above listed torque values shall be retorqued.
5) Torque values should be exceeded only when necessary to effect a seal.
6) Bolt torques for pipe and fittings lined with VHMWHDPE can be approximated by gripping a wrench with one hand and applying a steady force (about 50 lbs. for the average man). The middle of the hand should be a distance equal to two bolt circle diameters from the bolt.
7) If a flange leak occurs and the bolts on the leaking side have been properly torqued, THEY SHOULD NOT BE TIGHTENED FURTHER or permanent damage to the sealing face may result. Instead, the bolts on the opposite side should be loosened by a half turn at a time and then the bolts on the leaking side should be tightened by the same amount. If the leak persists, the bolts should be removed and the sealing faces should be examined for scratches or dents across an entire face which could provide a leak path. (Any scratches or dents which do not exceed 10% of the pipe-wall thickness might be eliminated by hand polishing with fine abrasive cloth or paper.)
8) If leakage occurs after the system has been cycled to an elevated temperature and back to ambient temperature, bolts should be retorqued after the cool down period. No further tightening should be necessary. After 24-30 hours or a temperature cycle or a pressure cycle, torque for each bolt shall be checked and those falling below the above listed torque values shall be retorqued. Torque values should be exceeded only when necessary to effect a seal.

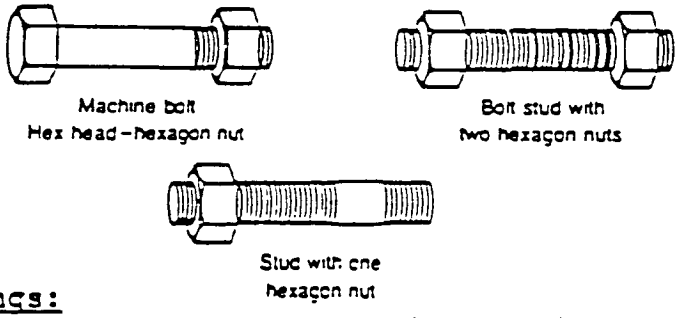

Metal Flange Rings:

Metal slip-on ring-type flanges with or without hubs may be used. Most normal applications use ANSI B16.5 Flange Class 150 dimensions and bolt hole patterns. Class 150 solid metal plate flanges are useful to 275 psi. AWWA C207 ring flanges for waterworks service in Class D (150 psi) and Class E (275 psi) are also used.

HDPE Minimum Flange-Face Thickness

The P.E. flange must be rigid enough to handle end thrust, ring deflection and axial tension without significant bending deflection. This strength resists opening of the seal face to fluid pressure which will further separate the flange faces resulting in possible drip leakage. For resistance to shear, a flange face thickness of 1.12 times pipe wall thickness is needed, although the flange face is subject to flexure and bending. As a general rule, a flange face thickness of 1.5 times the pipe wall is accepted as being thick enough to seal without problems. A flange face thickness of 2.0 times pipe wall thickness is accepted as an optimum. Flange face thicknesses greater than this produce little extra benefit.

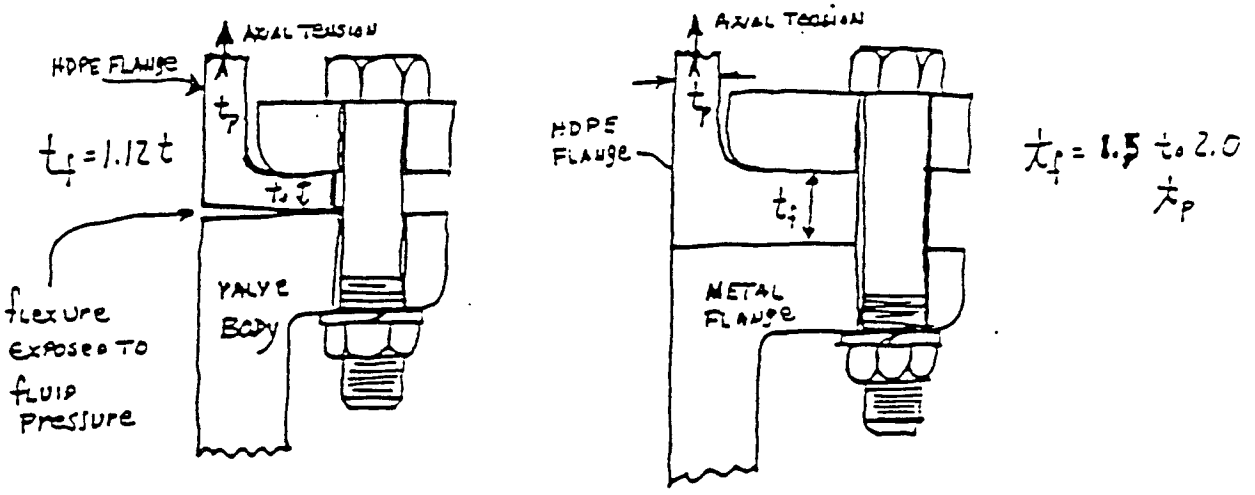

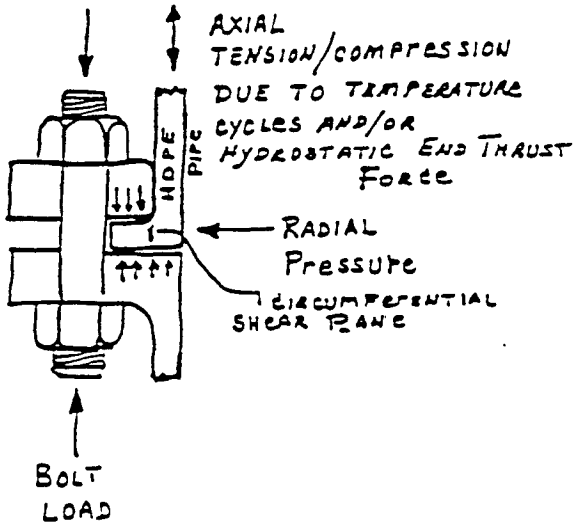

From a practical aspect, the residual compressive strain and resulting load must be "X" times internal pressure if a tight joint is to be maintained. This is the "m" valve used in the ASME Unfired Pressure Vessel Code. For P.E. at 73.4° F, m = 1.00 at a "y" contact surface unit initial seating design stress level of y = 1200 psi.

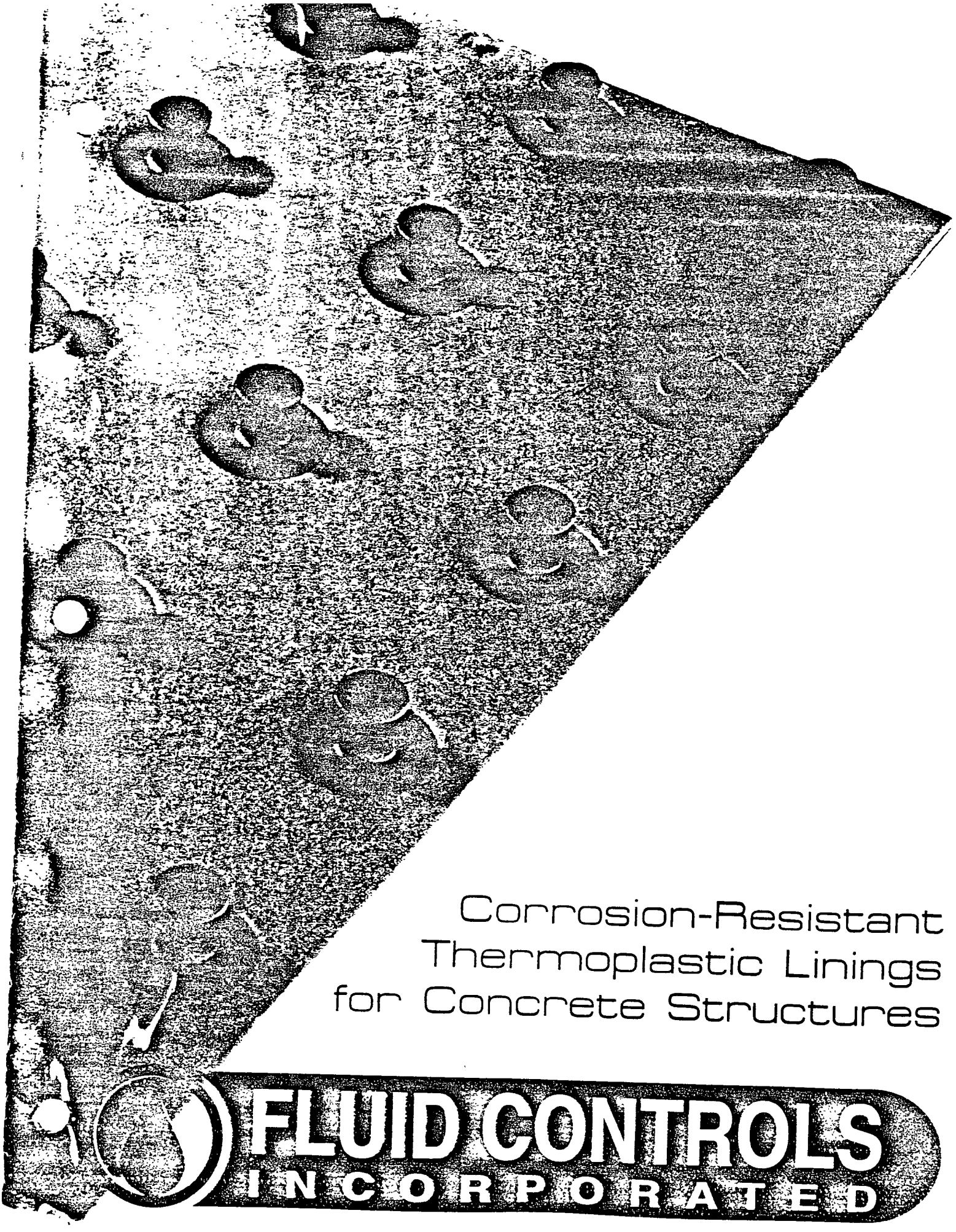

Corrosion-Resistant Thermoplastic Linings for Concrete Structures

FLUID CONTROLS
INCORPORATED

FLUID CONTROLS INCORPORATED

Meeting All You

Fluid Controls, Inc. is a factory-trained and certified installer for Atlas Minerals & Chemicals' Bekaplast® thermoplastic linings for concrete structures.

Bekaplast, developed by Steuler Industriewerke GmbH of Germany, has an outstanding 24-year international success record. A patented engineered anchoring and connecting system provides an integral corrosion- and abrasion-resistant lining for protecting concrete.

Used as a primary or secondary protective system, Bekaplast greatly expands the use of concrete structures for corrosive, toxic, ignitable, and reactive liquids and vapors.

With over 10 years of thermoplastic fabrication and installation experience, Fluid Controls' highly trained and certified technicians have the skills, equipment, and knowledge to assure the best possible Bekaplast installation.

The lightweight lining attaches easily to concrete forms and permits immediate placement of concrete. Seams between Bekaplast sheets are welded when the forms are stripped and the structure is ready to be placed in service.

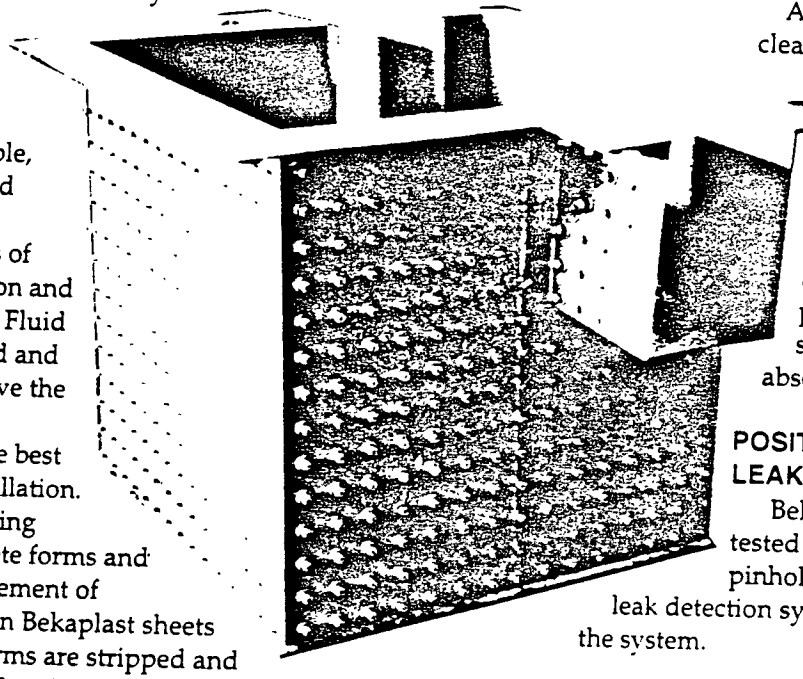

ABRASION & CHEMICAL RESISTANCE

Standard Bekaplast thermoplastic linings exhibit excellent resistance to wear. Ultra-high molecular weight polyethylene (UHMW-PE) is also available for dry abrasives and slurries in silos, bunkers, or chutes used for handling coal, ore, and grain.

Bekaplast has outstanding resistance to most acids, alkalies, salts, and solvents. Thermoplastics exhibit the broadest range of chemical resistance to acids and alkalies when compared to other available coating or lining systems.

THERMAL & HYDRAULIC PRESSURE RESISTANCE

Through patented, sonically welded plastic anchor studs embedded into the concrete, Bekaplast is an integral part of the structure and compensates for expansion and contraction of the concrete. The engineered lining system withstands cycling and service temperatures from -40°F to 212°F.

The anchor studs embedded in concrete will not separate from the concrete substrate if moisture penetrates from the outside.

Bekaplast withstands hydraulic pressure of up to an 18-foot water column—a unique feature that makes applications for vessels in areas with high water tables viable.

SANITARY/NONTOXIC/NONFLAMMABLE

A smooth, low-friction, easy-to-clean, nonporous surface means Bekaplast meets U.S. Food and Drug Administration and U.S. Department of Agriculture food service requirements. Polypropylene is available in a fire-retardant grade and polyvinyl chloride will not support combustion in the absence of a heat source.

POSITIVE PROTECTION/ LEAK DETECTION

Bekaplast linings are spark-tested after installation to ensure pinhole-free welded seams and leak detection systems can be provided with the system.

Bekaplast Benefits

- *Bridges concrete cracks within elongation characteristics of material.*
- *Easy-to-clean, non-stick surface.*
- *Combination of sheet and connector pieces provides total lining system.*
- *No compatibility problems.*
- *Provides continuous, pinhole-free lining.*
- *Easy to repair or add on to.*
- *Allows for rectangular, square, and round concrete structures.*
- *Can interface with resinous, cured-in-place material systems (steel pipe inlets/ outlets, line in trenches, etc.).*
- *Use for new construction or retrofit.*

Thermoplastic Lining Needs

DOUBLE WALL SYSTEMS

Bekaplast Double Wall Systems consist of an outer thermoplastic sheet that is factory-welded to an inner sheet to form a complete double-walled panel. After removal of the concrete forms, joints in both the outer and inner sheets are sealed by fusion welding to provide an integral liquid-tight and pressure-resistant leak detection interspace.

Monitoring devices are connected to the interspace to immediately detect any leak. The result is a lining system to provide positive leak detection immediately for applications that must meet strict environmental standards and regulations.

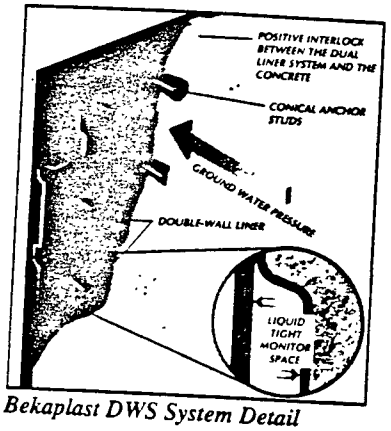

Bekaplast DWS System Detail

The leak detection interspace may be cleaned by simple flushing in the event of contamination.

Both single-wall and double-wall Bekaplast systems meet required criteria for UV and chemical resistance and benign physical effects.

STANDARD CONSTRUCTION PRACTICES

Bekaplast systems may be used in both new construction and retrofit. Installation of the linings does not require changing the form design or concrete mix. Bekaplast sheets are placed in the same manner as form liners used to accomplish various architectural finishes.

ingle-wall Bekaplast nings are 3 to 15 mm ick and are available in 'E, PVC, PP, and PVDF. The systems tolerate high nd low temperatures, as ell as abrupt tempera-ure changes. Bekaplast L creates a leak ctection interspace ing two separate panels hich allow leaks to flow the leak detection stem faster.

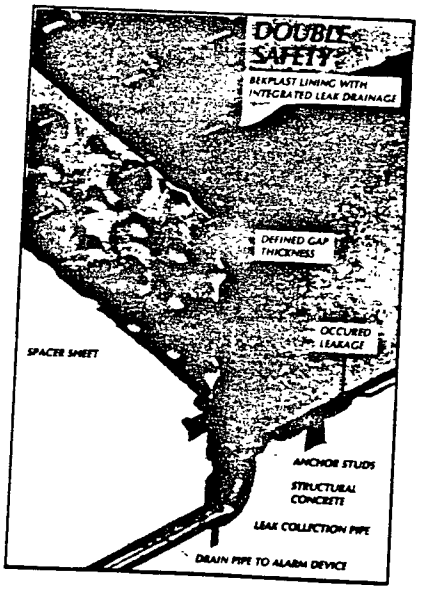

atlas — World Leader in corrosion-resistant construction materials

CORROSION ENGINEERING SERVICES

Bekaplast Specifications

- Standard sheet thickness is 1/8" (3mm) and 3/16" (5mm). Sheet thicknesses to 19/32" (15mm) are available upon request.
- Standard sheet size is 59" x 118".
- Bekaplast sheet lining materials conform with all applicable ASTM and DIN Standards.

Bekaplast High-Density Polyethylene (PE) is resistant to many acids and alkalies over a wide range of concentrations and temperatures. Maximum continuous service temperature is approximately 176°F (80°C). It exhibits good resistance to impact even at temperatures to -40°F (-40°C). It meets FDA/USDA mandates for use in food service installations. Standard sheets are black, which are UV-stabilized for outdoor applications.

Bekaplast Ultra-High Molecular Weight Polyethylene for wear resistance is recommended for protecting such surfaces as coal bunkers and grain silos, as well as chutes of bulk storage and delivery systems. It is FDA/USDA acceptable for food service installations. Bekaplast UHMW Polyethylene is available in weldable (500) and nonweldable grades (1000).

Bekaplast - Polypropylene (PP) is a stress-relieved co-polymer, resistant to acids, alkalies, salts, and solvents. The maximum continuous service temperature is 212°F(100°C). Bekaplast polypropylene is FDA/USDA acceptable for food service installations.

Bekaplast - Polypropylene, Flame-Retardant is similar to Bekaplast Polypropylene and contains chemical additives that impart flame retardancy. Flame-retardant polypropylene is not recommended for FDA/USDA applications.

Bekaplast Polyvinyl Chloride (PVC) is a high-impact plasticized polyvinyl chloride that provides chemical resistance to many acids, alkalies, and salts. The maximum continuous service temperature is 140°F(60°C). Due to its high strength and self-extinguishing characteristics, it is suitable for use in various exhaust system applications.

Bekaplast Polyvinyl Chloride, UV-Resistant is a polyvinyl chloride material of improved impact resistance, and is UV-stabilized for outdoor applications.

Bekaplast Polyvinylidene Fluoride (PVDF) is a high molecular weight crystalline material suitable for continuous service to 212°F(100°C) (maximum temperature to which concrete can be subjected). It has outstanding chemical resistance to concentrated acids and solvents. Bekaplast Polyvinylidene Fluoride meets FDA/USDA standards.

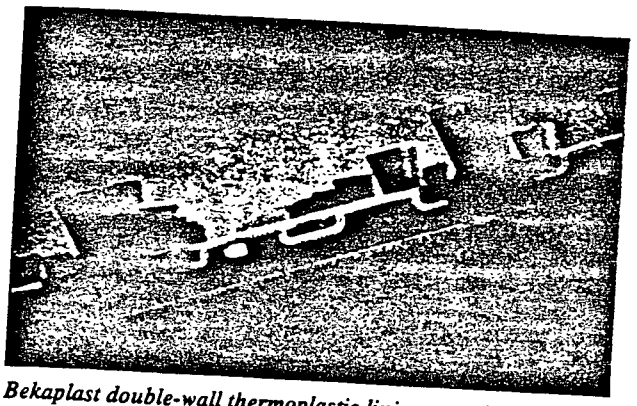

Bekaplast double-wall thermoplastic linings provide positive leak detection for protection of trenches, tanks, and sumps that convey and contain corrosive, toxic, ignitable, and reactive liquids.

Typical Applications

- *Trenches and Catch Basins*
- *Sumps and Pits*
- *Tanks and Cells*
- *Manholes and Piping*
- *Flumes and Chute Linings for Dry and Wet Applications*
- *Underground Storage Vaults and Chests*
- *Chemical Process, Storage, and Industrial Waste Treatment Tanks*
- *Municipal Sewage and Water Treatment Tanks*
- *Tank Farm Dikes and Pump Pads*
- *Specialty Industrial Floors*
- *Concrete Ducts and Stacks*
- *Offshore and Shoreside Concrete Marine Pilings and Bulkheads*
- *Nuclear and Coal-Fired Power Plant Tanks and Sumps*
- *Pickling, Plating, and Galvanizing Tanks*

REDUCED CONSTRUCTION TIME

Since Bekaplast linings can be placed in service immediately after welding the seams, the curing time needed before placing conventional coatings and linings on concrete is eliminated. In addition, time for surface preparation and application of coating and linings is eliminated, saving costly construction time.

ENGINEERING ASSISTANCE

Fluid Controls will assist you in selection and design of an appropriate Bekaplast lining. Chemical, thermal, and mechanical service conditions are carefully considered.

Bekaplast can be cut, formed, and welded to fit the contour of trenches, sumps, tanks, and pipe. It can also be used for various corrosion-resistant floor applications. Heat and shelter requirements for placing Bekaplast are similar to those for placing concrete.

Fluid Controls' factory-trained plastic technicians are available to assist in placing, welding, and spark-testing Bekaplast installations and we have all of the necessary equipment.

LONG-TERM PROTECTION

Bekaplast linings provide the long-term protection normally anticipated for the life of a concrete structure. In the event of unusual settling or concrete movement that could damage the lining, field repairs are easily made with thermoplastic welding.

If you need the ultimate in primary and secondary containment, call Fluid Controls for a free consultation on how Bekaplast single- or double-wall systems may meet your requirements.

NO POSTAGE NECESSARY IF MAILED IN THE UNITED STATES

BUSINESS REPLY MAIL

FIRST CLASS MAIL PERMIT NO. 9013 HUNTSVILLE, AL

POSTAGE WILL BE PAID BY THE ADDRESSEE

FLUID CONTROLS INCORPORATED

WORLD LEADERS IN PLASTIC PIPING & FABRICATION

3435 Stanwood Blvd. NE
Huntsville, AL 35811-9954

Bekaplast®
The World Leader in Thermoplastic Linings for Concrete Structures

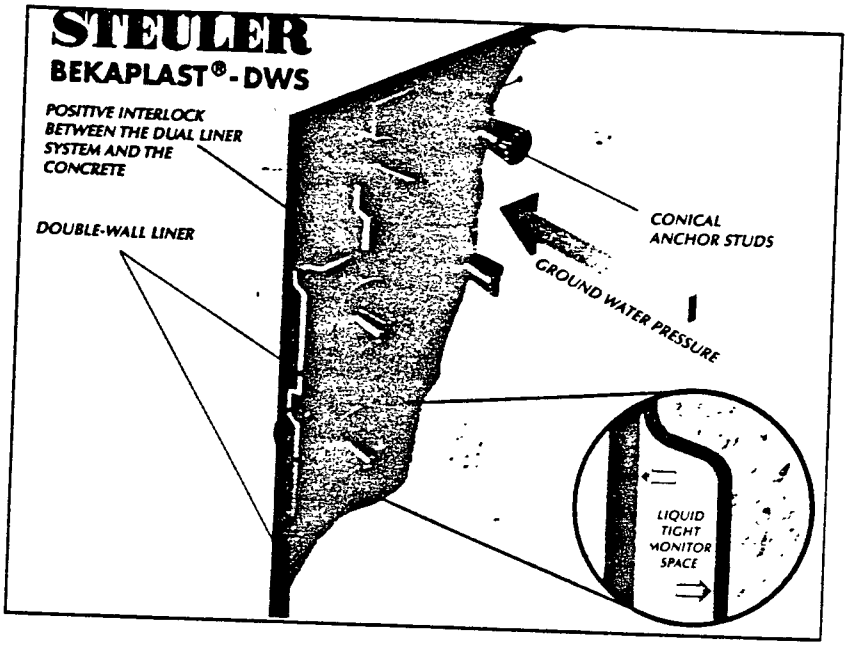

For all your thermoplastic lining needs, as well as dual containment pipes and fittings, leak detection systems, perforated pipe, polyethylene manholes, and custom thermoplastic fabrication, please return the reply card below or give us a call.

FLUID CONTROLS INCORPORATED
World Leaders In Plastic Piping & Fabrication
3435 Stanwood Blvd., NE
Huntsville, AL 35811-9954
(205) 851-6000 • Fax (205) 852-6005
(800) 462-0860

❑ Please send additional information on Bekaplast and other corrosion-resistant thermoplastic linings.

I am also interested in:

❑ Dual containment pipes and fittings

❑ Leak detection systems

❑ Perforated pipe

❑ Polyethylene manholes

❑ Custom polyethylene fabrication

Name _____

Title _____ Department _____

Company _____

Address _____

City _____ State _____ Zip _____

Phone _____

Fax _____

Features and Benefits of BEKAPLAST® Thermoplastic Linings

Features	Benefits
• Takes advantage of known features of rigid plastic sheet material (PVC, PVDF, PP, HDPE, UHMW-PE), and special grades.	• Proven track record of chemical and physical properties.
• Has optimal spacing and weld strength of anchor studs.	• Compensation/suppression of thermal expansion/contraction between BEKAPLAST and substrate.
• Uses space between anchor studs for expansion with anchors embedded in concrete.	• Bridges concrete cracks within elongation characteristics of material.
• Has USDA, flame retardant and UV-resistant grades available.	• Ideal for food processing, ductwork and outdoor applications.
• Low friction, smooth surface.	• Easy to clean, non-stick surface.
• Can take 15-ft. hydrostatic back pressure.	• Eliminates exterior waterproofing of inground structures.
• Has variety of connector and trim pieces.	• Combination of sheet and connector pieces provides total lining system.
• Has variety of accessory options (weirs, overflows, pipe brackets, maximum temperature sensors).	• No compatibility problems.
• Designed for double containment capability.	• Provides EPA required Primary and Secondary containment along with leak detection system.
• Uses proven plastic welding and spark testing techniques.	• Provides continuous, pinhole-free lining Easy to repair or to add on to.
• Can be bent in all directions.	• Allows for rectangular, square and round concrete structures.
• Has fabric-backed material available.	• Can interface with resinous, cured-in-place material systems (steel pipe inlets/outlets, line holder in trenches, etc.).
• Features an international successful track record for 15 years.	• Proven lining system with applications worldwide.
• Used as formwork liner for new concrete structures and for overpour facings.	• Applicable for new construction and old, retrofit jobs.
• Prefabricated components can be field-assembled.	• Short installation time.
• Lightweight sheets and prefab sections.	• Easy to handle, ship and store.

FLUID CONTROLS INCORPORATED
WORLD LEADERS IN PLASTIC PIPING & FABRICATION

Corporate Office: 3435 Stanwood Blvd. NE • Huntsville, AL 35811
(205) 851-6000 • 1-800-462-0860 • FAX (205) 852-6005
Branches: Mobile, AL • (334) 479-4800 • Memphis, TN • (901) 384-0806

BEKAPLAST® Thermoplastic Lining Systems...

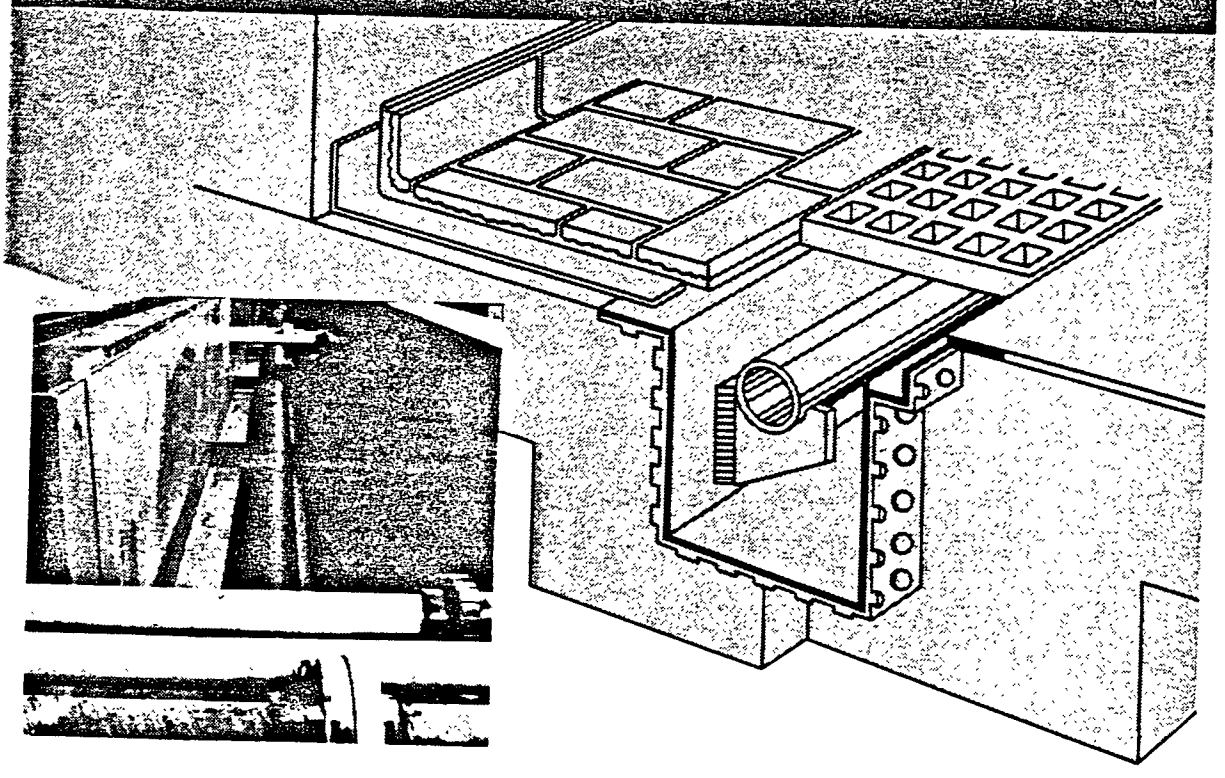

First choice for leak-free trenches and sumps to prevent ground water contamination.

ATLAS BEKAPLAST® is lightweight and easy to install, saving time and money. Its unique anchor and connection system mechanically locks into concrete, and resists ground water pressure to 15 feet.

- Used for primary and secondary containment with leak detection systems
- Fabricated to any size or shape
- Positive tie-in with flooring system
- Cleanable...FDA acceptable
- Bridges concrete cracks, compensates for expansion and contraction
- Used for new construction or rehab

FLUID CONTROLS INCORPORATED

WORLD LEADERS IN PLASTIC PIPING & FABRICATION

Corporate Office: 3435 Stanwood Blvd. NE • Huntsville, AL 35811
(205) 851-6000 • 1-800-462-0860 • FAX (205) 852-6005
Branches: Mobile, AL • (334) 479-4800 • Memphis, TN • (901) 384-0806

*FLUID CONTROLS, INC. IS A FACTORY TRAINED AND CERTIFIED INSTALLER FOR ATLAS BEKAPLAST®

MATERIAL COST ≈ ~2.00/SQ. FT.
1 COAT PRIMER 3 MILS
1 COAT CEILLINE 35 MILS

CEILCOTE® 40 CEILLINE

Crack-Bridging
High Performance Lining
(Temporary Bulletin)

CEILCOTE®
Corrosion Control Products

1.51T

TECH·DATA

DESCRIPTION:

The CEILCOTE 40 CEILLINE is a stand alone corrosion resistant lining system capable of bridging cracks in concrete structures. The elastomeric topcoat provides a durable monolithic lining over moving or cracked concrete.

This proprietary "liquid-applied" system provides excellent crack bridging capabilities along with good general corrosion resistance for most conditions in a secondary applications, including containment of chemicals, oils and waste affluents.

Primer - Moisture tolerant, flexible primer penetrates, strengthens and seals the concrete.

Topcoat - Squeegee and roll applied elastomeric topcoat bridges cracks caused by moving/cracked concrete while providing chemical containment.

TYPICAL USES:

- Secondary containment areas
- Floors not exposed to limited traffic
- Mechanical room floors
- Areas subjected to thermal shock
- Tank farms

ADVANTAGES:

- Corrosion barrier over moving/cracked concrete
- Seamless surface
- System can be spark tested with use of CEILCOTE 680C (Conductive) PRIMER
- 100% solids

COLORS:

Available in gray

PHYSICAL PROPERTIES:

Thickness:	40 mils @ 2 coats 20 mils each
Tensile strength: (ASTM D 412-89)	1000 psi
Tear strength: (ASTM D 624-73)	110 psi
Elongation: (ASTM D 412-89)	80 - 100%
Adhesion to concrete: (ASTM C 836 sec 4.10)	490 psi
Chloride Ion Permeability: (AASHTO-277-831)	0.01 coulombs
UV Resistance (ASTM D 832)	discoloration after 12 hrs. no appreciable change in properties

Chemical Resistance:
Dilute concentrations of acids, caustic and some limited solvents. Under higher concentrations system may become sacrificial

Flash Point:
(Pensky-Martens Closed Cup)
CEILCOTE 680 PRIMER (Resin Part A)
204°F (95°C)
#9 Hardener
228°F (108°C)
CEILCOTE CEILLINE TOPCOAT (Resin Part A)
480°F (140°C)
CEILCOTE CEILLINE TOPCOAT (Hardener Part B)
285°F (140°C) (Seta)
Shelf Life:
Shelf life for material is 1 year minimum if kept tightly sealed and stored at 70°F (21° C)

SERVICE TEMPERATURE LIMITS:

Occasional Splash/Spill/Rinse 120°F-160°F

COVERAGE:

CEILCOTE 680 PRIMER
175 - 200 ft²/gal (4.3 - 4.9 m2/litre)
(thinned with 30 fl oz/gal T-471)
CEILCOTE 40 CEILLINE
Theoretical - 40 ft²/gal (.98 m²/litre) @ 40 mils

PACKAGING:

CEILCOTE 680 PRIMER 1 & 4 gal units
CEILCOTE 40 CEILLINE 1 & 5 gal units

MIXING RATIO:

CEILCOTE CEILLINE TOPCOAT

By Weight	1:1.2
By Volume	1:1.25

HANDLING PROPERTIES:

(Approximate Time)

	50°F (10°C)	73°F (23°C)	90°F (32°C)
Working Time	280 min	100 min	40 min
Recoat Time	16 - 24 hrs	6 - 8 hrs	2 - 4 hrs
Cure Time	1 week	2-3 days	1 day

LIMITATIONS:

Do not apply CEILCOTE 40 CEILLINE when the surface temperature is below 50°F (10°C)

Surfaces should be recoated within one (1) week when exposed to sunlight; otherwise within two (2) weeks to assure proper adhesion between coats. Confirm recoatability by wiping the coating with toluene. If surface is not softened by toluene, surface must be grit blasted or mechanically abraded to provide a non-glossy, rough surface.

Master Builders Technologies

INSTALLATION PROCEDURES: (abbreviated)

Please refer to Installation Procedures (1.51I) for further details.

SURFACE PREPARATION:

Concrete - Abrasive blasting or scarification to remove laitance and surface contaminants is recommended. Concrete must be thoroughly cured, free of oils, curing solutions, mold release agents and dust. Concrete must be dry at time of application.

Primers:
For concrete
Ceilcote CEILCOTE 680 PRIMER
Ceilcote CEILCOTE 680C (Conductive) PRIMER

APPLICATION:

NOTE: For each application step, mechanically mix each component (i.e. Resin Part A and Hardener Part B) individually prior to blending together. After initial mixing, add hardener to resin (at appropriate volumes) and mix for two or more minutes to ensure proper dispersion.

Mix and apply primer per instructions.

Mix and squeegee apply CEILCOTE CEILLINE TOPCOAT at 40 mils on horizontal surfaces. Use a spiked roller to remove any entrapped air. For vertical surfaces roller apply 2 coats to achieve a 30 - 40 mil thickness. Allow the topcoat to fully cure before second topcoat or putting into service.

CLEAN UP:

Use Toluene, Xylene, T-410 or T-430 or lacquer thinner

SAFETY:

Store in cool, dry area [50°-75°F (10°-24°C)] away from direct sunlight, flame or other hazards.

Ceilcote CEILCOTE 680 PRIMER contains epoxy resins and polyamine hardener. CEILCOTE CEILLINE TOPCOAT contains a proprietary two component resin and hardener. The products components have been formulated to optimize physical characteristics such as filling capacity, abrasion, moisture and chemical resistance while minimizing hazardous physical and health factors encountered during application. A concerted effort is made to be aware of the latest chemical toxicological information and to apply this knowledge in a responsible manner to insure product safety.

During the application of CEILCOTE CEILLINE material, always wear gloves and appropriate work clothing to minimize contact. Ventilation is required with special consideration for enclosed or confined areas. Air movement must be designed to ensure turnover at all locations in work area and adjacent areas to avoid buildup of heavy vapors. Use caution when handling flammable liquids, eliminate sources of ignition from work area and containers with residues.

Observe safety storage practices by separating resins from hardeners, by keeping solvents in a cool area, free of sources of ignition. Observe a special warning on RED and YELLOW labeled products. The RED label represents amine type chemicals and the YELLOW label represents organic peroxide type chemicals which should not be stored adjacent or mixed together because of possible violent reaction between them.

Product Material Safety Data Sheets are available and should be consulted when handling products. These products are for industrial and professional use only; application directions must be followed.

MAINTENANCE:

Periodically inspect the applied material and repair localized areas needed. Consult your Master Builders representative for additional information.

TECHNICAL ASSISTANCE:

For technical assistance, please contact your Master Builders representative.

WARRANTY:

The technical data furnished herein is true and accurate to the best of our knowledge. However, no guarantee of accuracy is given or implied.

Master Builders warrant that its products are free from defects in manufacture for a period (1) year from date of purchase, if installed prior to expiration date and applied and used in accordance with Master Builders published specifications applicable to such products. MASTER BUILDERS EXPRESSLY DISCLAIMS ALL OTHER WARRANTIES, EXPRESS OR IMPLIED, INCLUDING THE IMPLIED WARRANTIES OF MERCHANTABILITY AND FITNESS FOR PURPOSE. MASTER BUILDERS DISCLAIMS ALL LIABILITY FOR INCIDENTAL, CONSEQUENTIAL OR INDIRECT DAMAGES OF ANY NATURE WHATSOEVER. This warranty cannot be changed or modified whether by course of dealing, custom or trade or otherwise, unless agreed to in writing by Master Builders, Inc.

Standards concerning the use of products are not to be construed as recommending the infringement of any patent, and no liability for infringement arising out of such use is assumed by Master Builders, Inc.

Master Builders Technologies

Master Builders, Inc.
23700 Chagrin Boulevard
Cleveland, OH 44122
Tel. (216) 831-5500
Tel. (800) 227-3350
Fax. (216) 831-6910

Master Builders Technologies Ltd.
3837 Weston Road
Toronto, Ontario
Canada M9L 1W1
Tel. (416) 741-3830
Tel. (800) 387-5562
Fax. (416) 741-7925

Transcoreca S.A. de C.V.
Blvd. M. Avila Camacho 60, 3er Piso
53380 Naucalpan Mexico
Mexico
Tel. (011 525) 557-5544
Fax. (011 525) 386-7803

® Registered Trademark of Sandoz, Ltd.

© 1994, Master Builders, Inc.
Printed in U.S.A. 594

CEILCOTE® 40 CEILLINE®

(Temporary Bulletin, April, 1994)

CEILCOTE
Corrosion Control Products

1.511

INSTALLATION

Procedure

DESCRIPTION:

The following procedures are to be used when applying CEILCOTE CEILLINE Series to concrete surfaces. This information is as specific as possible, but cannot cover all variations in field conditions. Therefore, supervisors experienced in installing Ceilcote materials may sometimes deviate slightly from the published procedures. This is done to give a better installation by using the most up-to-date methods to fit specific field and service conditions.

EQUIPMENT:

- Plaster or Cement Finishing Trowel
- Pointing or marginal Trowel
- Paint Rollers-short 3/8" fiber mohair
- Paint Brushes-pure bristle
- Pails (3 or 5 gal.) for mixing & cleaning
- Small Graduate for measuring Hardener
- Large Graduate for measuring Liquid
- Abrasive blast Equipment or Blastrac unit
- 1/2" Drill Motor-for mixing
- Plaster Whip-for mixing
- Cleaning Solvent
- Squeegee
- Spiked Roller

MATERIALS REQUIRED:

- CEILCOTE 680 PRIMER for concrete
- CEILCOTE CEILLINE Resin
- Solvent for Cleaning-T-410, MEK or lacquer thinner

SURFACE PREPARATION:

Concrete Walls:

The surface of most formed concrete contains holes from air entrapment. The best preparation is to lightly abrasive blast to open holes covered with cement and to roughen the surface. The holes should be filled using CEILCOTE 680 PRIMER and CEILCOTE S-11 Powder. The trowel should be used as a squeegee, stroking in several directions to completely fill the holes and scraping the surface. For complete surface preparation for old and new concrete refer to CEILCOTE Construction Practice CP-11.

The major problem with curing concrete is the water content, therefore a thorough moisture test must be done on the substrate. This can be checked by ASTM D-4263, which calls for taping an 18" x 18" square of polyethylene or other clear film to the floor. If condensation appears on the underside of the film or if the concrete becomes visibly damp within 8 hours, the concrete is not dry enough to place the CEILCOTE CEILLINE materials.

Concrete Floors: New concrete floors should be cured and then Blastrac, abrasive blast or Scarify. For complete surface preparation for old or new concrete refer to CEILCOTE Construction Practice CP-11.

APPLICATION:

Do not apply CEILCOTE 40 CEILLINE when the surface temperature is below 50° F (10° C).

Priming:

Remove dirt, dust and abrasives by vacuuming, air blowing or careful brushing. Surfaces must be primed with CEILCOTE 680 PRIMER. Primer may be sprayed or roller applied. CEILCOTE 680 PRIMER (thinned) on concrete covers 160 -200 ft²/gal (3.9 - 4.9 m²/litre). Use up to 30 oz. per gal. of T-471 thinner per gal. of primer. To assure proper adhesion primer should be coated within 1 week when exposed to sunlight; otherwise, within 2 weeks before coating with CEILCOTE 40 CEILLINE. Confirm recoatability by wiping the primer with toluene. If surface becomes "tacky", adhesion is acceptable. If surface is not softened by toluene, surface must be grit blasted or mechanically abraded to provide a non-glossy, rough surface.

Topcoat:

Mix CEILCOTE 40 CEILLINE resin and hardener thoroughly, using either a paddle or a mixing whip attached to a 1/2" electric drill. Squeegee apply the CEILCOTE 40 CEILLINE resin at 30 - 50 mils on to horizontal surfaces. Please note, for vertical applications material must be rolled applied @ 2 coats 15 - 25 mils per coat. Immediately roll all material with spiked roller to allow any trapped air to be released.

Cure Time:

Final cure times before putting area into service generally ranges between 24 - 72 hours.

CLEAN UP:

Equipment and tools may be cleaned up with T-410, MEK or lacquer thinner.

Master Builders Technologies

CEILCOTE® 40 CEILLINE INSTALLATION PROCEDURE

SAFETY:

Store in cool, dry area [50°F - 90°F(10°C - 33°C)] away from direct sunlight, flame or other hazards.

CEILCOTE 680 PRIMER contains epoxy resins and polyamine hardener. CEILCOTE 40 CEILLINE contains a proprietary two component resin and hardener. The product's components have been formulated to optimize physical characteristics such as filling capacity, abrasion, moisture and chemical resistance while minimizing hazardous physical and health factors encountered during application. A concerted effort is made to be aware of the latest chemical toxicological information and to apply this knowledge in a responsible manner to insure product safety.

During the application of CEILCOTE 40 CEILLINE materials, always wear gloves and appropriate work clothing to minimize contact. Ventilation is required with special consideration for enclosed or confined areas. Air movement must be designed to insure turnover at all locations in work area and adjacent areas to avoid buildup of heavy vapors. Use caution when handling flammable liquids, eliminate sources of ignition from work area and containers with residues.

STORAGE SAFETY:

Observe safe storage practices by separating resins from hardeners, by keeping solvents in a cool area, free of sources of ignition. Observe a special warning on RED and YELLOW labeled products. The RED label represents amine type chemicals and the YELLOW label represents organic peroxide type chemicals which should not be stored adjacent or mixed together because of possible violent reaction between them.

Product Material Safety Data Sheets are available and should be consulted when handling products. These products are for industrial and professional use only; application directions must be followed.

FOR INDUSTRIAL AND PROFESSIONAL USE ONLY

MAINTENANCE:

Periodically inspect the applied material and repair localized areas needed. Consult your Master Builders representative for additional information.

TECHNICAL ASSISTANCE:

For technical assistance, please contact your Master Builders representative.

Master Builders, Inc.
23700 Chagrin Boulevard
Cleveland, Ohio 44122
216-831-5500
Fax: 216-831-6460

Master Builders Technologies, Ltd.
3637 Weston Road
Toronto, Ontario M9L 1W1
416-741-3830
Fax: 416-741-7925

Customer Service, Ceilcote Corrosion Control Products
800-874-4476

® Registered Trademark of Sandoz, Ltd.

1994, Master Builders, Inc.
Printed in U.S.A. 494

FOSTER WHEELER ENVIRONMENTAL CORPORATION

BY J VERACCO DATE 1/26/99 SHEET 1 OF ___

CHKD. BY MWJ DATE 1/29/99 OFS NO. ___ DEPT. NO. ___

CLIENT DEPARTMENT OF NAVY - NAVAL WEAPONS STATION EARLE

PROJECT RAIL CAR SPILL CONTAINMENT

SUBJECT SOIL EROSION CONTROL PLAN - AREA CALCULATIONS

SCALE OFF DRAWING:

1" = 10'

TRANSFER STATION SPILL PAD (TYP)

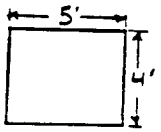

AREA = (4')(5') = 20 FT²

× 4 SPILL PADS TYP SIZE

80 FT²

TRANSFER STATION SPILL PAD (DIRECTLY EAST OF WATER PLANT BLDG)

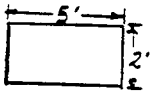

AREA = (5')(2') = 10 FT²

TRACK PANS:

SUMP AREA (JUST NORTH OF THE OVERFLOW BASIN)

(6')(5') = 30 FT²

4 END PANS

@ 18'-11" LONG = 227 IN.

10'-0" WIDE = 120 IN

(227 IN)(120 IN) = 27,240 IN² ≅ 189 FT²

× 4

756 FT²

3 CENTER PANS

@ 39'-5" LONG = 473 IN

10'-0" WIDE = 120 IN

(473 IN)(120 IN) = 56,760 IN² = 394 FT²

× 3

1,182 FT²

FOSTER WHEELER ENVIRONMENTAL CORPORATION

BY J VERACCO DATE 1/26/99
CHKD. BY MWJ DATE 1/29/99
SHEET 2 OF
OFS NO.
DEPT. NO.
CLIENT DEPARTMENT OF NAVY- NAVAL WEAPONS STATION EARLE
PROJECT RAIL CAR SPILL CONTAINMENT
SUBJECT SOIL EROSION CONTROL PLAN - AREA CALCULATIONS (CONT'D.)

TRACK PANS (CONT'D.)

TANKER TRUCK TRANSFER AREA

2 PANS

EACH: 18'-11" LONG = 227 IN
10'-0" WIDE = 120 IN

(227 IN)(120 IN) = 27,240 IN² = 189 FT²
× 2
378 FT²

~~TANKER TRUCK TRANSFER PAD AREA = 508 FT.²~~
(FROM AUTO CAD)

OVERFLOW BASIN AREA = 1,780 FT²
(FROM AUTO CAD)

TOTAL AREA NO LONGER LEAVING THE SITE AS RUNOFF:

SPILL PADS	80 FT²
	10
SUMP AREA	30
TRACK PANS	756
	1,182
	+ 378
~~TRANSFER PAD~~	~~508~~
OVERFLOW BASIN	1,780
	~~4,724~~ FT.²
	4,216

FOSTER WHEELER ENVIRONMENTAL CORPORATION

BY T. VERACCO DATE 1/26/99
CHKD. BY MWJ DATE 1/29/99
SHEET 3 OF
OFS NO.
DEPT. NO.
CLIENT DEPARTMENT OF NAVY - NAVAL WEAPONS STATION EARLE
PROJECT RAIL CAR SPILL CONTAINMENT
SUBJECT SOIL EROSION CONTROL PLAN - AREA CALCULATIONS (CONT'D.)

EXISTING GRAVEL AREA THAT IS PROPOSED TO BE PAVED:

4,669 FT² (FROM AUTOCAD)

RATIONAL EQUATION:

$$Q = CIA$$

Q = peak rate of runoff
I = Intensity of rainfall
A = drainage area
C = friction coefficient

C → asphalt or concrete paving → 0.70-0.95 ≈ 0.9
C → based on field conditions of well compacted gravel, existing C = 0.45
I = 7.8 (from chart)

Asphalt area = 4,669 FT²

Spill Containment area = 4,724 FT²

CONVERSION FACTOR 1 acre = 43,560 ft.²

$$Q_{EXIST} = (0.45)(7.8)\left(\frac{4,669 + 4,724}{43,560}\right)$$

= 0.76 ft³/sec. Existing Runoff

$$Q_{PROP} = (0.9)(7.8)\left(\frac{4,669}{43,560}\right)$$

= 0.75 ft³/sec. ∴ Proposed less than exist OK

FWENC 581D 10/96

FOSTER WHEELER ENVIRONMENTAL CORPORATION

BY J VERACCO DATE 1/27/99
CHKD. BY MWJ DATE 1/29/99
SHEET 4 OF 6
OFS NO. _____ DEPT. NO. _____
CLIENT DEPARTMENT OF NAVY - NAVAL WEAPONS STATION EARLE
PROJECT RAIL CAR SPILL CONTAINMENT
SUBJECT SOIL EROSION CONTROL PLAN CALCULATIONS (CONT'D)

VERIFY THAT DRAINAGE PIPE IS SUFFICIENT FOR PEAK FLOW OF 0.75 FT³/SEC:

$Q_{PIPE} = 0.75\ FT^3/SEC$

6" PIPE

$A = \pi r^2$

$= (\pi)(0.25\ FT)^2$

$A = 0.196\ FT^2$

$V = \left(\frac{0.75\ FT^3}{SEC}\right)\left(\frac{1}{0.196\ FT^2}\right) = 3.83\ FT/SEC > 2\ FT/$

$R_h = \pi r^2 / 2\pi r$ (FOR PIPE FLOWING FULL)

$= (0.196)/(2 \cdot \pi \cdot 0.25)$

$= 0.125\ FT.$

$S = 1.2\% = 0.012$

$n = 0.01$ (FOR SMOOTH PLASTIC PIPE)

$$Q = \frac{1.49}{n} A R_h^{2/3} S_o^{1/2}$$

$$= \left(\frac{1.49}{0.01}\right)(0.196)(0.125)^{2/3}(0.012)^{1/2}$$

$Q = 0.80\ FT^3/SEC > 0.75\ FT^3/SEC$ ∴ OK

OUTLET PROTECTION

MAT SIZE

FLOW = 0.75 FT³/SEC
6" PIPE

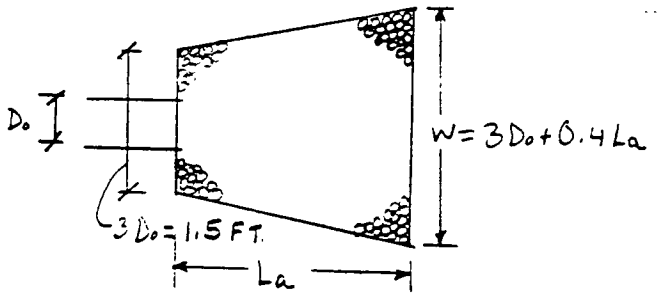

$$L_a = \frac{3Q}{D_o^{3/2}}$$

$$= \frac{(3)(0.75)}{(0.5)(3/2)}$$

$L_a = 3$ FT. (MINIMUM)
↳ USE 5 FT

$W = (3)(0.5) + (0.4)(3)$
$W = 2.7$ FT $\approx$ 3 FT. (MINIMUM)
↳ USE 5 FT.

STONE SIZE

$T_W \geq 1/2\ D_o$

$(1/2)(0.5) = 0.25$ USE $0.3 = T_W$

$$d_{50} = \left(\frac{0.02}{T_W}\right)\left(\frac{Q}{D_o}\right)^{4/3}$$

$$d_{50} = \left(\frac{0.02}{0.3}\right)\left(\frac{0.75}{0.5}\right)^{4/3}$$

$d_{50} = 0.11' = 1.32''$ (MINIMUM)

USE 3" & 6" DEEP MAT

FOSTER WHEELER ENVIRONMENTAL CORPORATION

BY J VERACCO DATE 1/27/99
CHKD. BY MWJ DATE 1/29/99
SHEET 6 OF 6
OFS NO. _____ DEPT. NO. _____
CLIENT DEPARTMENT OF NAVY- NAVAL WEAPONS STATION EARLE
PROJECT RAIL CAR SPILL CONTAINMENT
SUBJECT SOIL EROSION CONTROL PLAN- CALCULATIONS (CONT'D.)

VOLUME OF BASIN

34' (9.5 − 6.5) = 3'
22' (3')(34')(22') = 2,244 FT.³

40' (9.5 − 7) = 2.5'
28' (2.5)(40*28 − 34*22) = 930 FT.³ − 30 FT³

46' (9.5 − 8) = 1.5
34' (1.5)(46*34 − 40*28) = 666 FT.³ − 72 FT³

48' (9.5 − 9) = 0.5
36' (0.5)(48*36 − 46*34) = 82 FT³ − 33 FT³

TOTAL 3,787 FT³ = 28,330 gallons

ACCOUNTING FOR CURVED SHAPE OF BASIN

(3')(3')(1/3)(4) = 12 FT²
(12 FT²)(2.5') = 30 FT³

(6')(6')(1/3)(4) = 48 FT²
(48 FT²)(1.5') = 72 FT³

(7')(7')(1/3)(4) = 65 FT²
(65 FT²)(0.5 FT) = 33 FT³