N60478.AR.000530
NWS EARLE
5090.3a

AIR SPARGING/SOIL VAPOR EXTRACTION PILOT TEST REPORT

OPERABLE UNIT No.3: SITE 26

NAVAL WEAPONS STATION - EARLE
COLTS NECK, NEW JERSEY

Issued:

June 14, 1999

Prepared for:

Naval Facilities Engineering Command
10 Industrial Highway
Lester, PA 19113

Prepared by:

Foster Wheeler Environmental Corporation
2300 Lincoln Highway
One Oxford Valley - Suite 200
Langhorne, PA 19047 - 1829

REMEDIAL ACTION CONTRACT N62472-94-D-0398
DELIVERY ORDER NO. 0034

Revision	Date	Prepared By:	Approved By:	Pages Affected
0	Jun. 14, 1999	D. Walsh, P.G.	M. Heffron, P.G.	N/A

NAVAL WEAPONS STATION – EARLE

COLTS NECK, NEW JERSEY

TABLE OF CONTENTS

Section		Page
1.0	INTRODUCTION	1
2.0	SITE LOCATION AND BACKGROUND	1
2.1	PREVIOUS INVESTIGATIONS	1
3.0	SITE GEOLOGY	4
3.1	GROUNDWATER	4
3.2	NATURE AND EXTENT OF GROUNDWATER CONTAMINATION	5
4.0	AIR SPARGE/SVE PILOT TEST	7
4.1	WELL LOCATIONS/CONSTRUCTION	7
4.1.1	Drilling Methods and Soil Descriptions	7
4.2.2	Well Construction	9
4.2	PILOT TEST EQUIPMENT	10
4.3	SVE TEST RESULTS	10
4.4	AIR SPARGE TEST RESULTS	15
5.0	RECOMMENDATIONS FOR FULL-SCALE DESIGN	18
6.0	REFERENCES	19

TABLE OF CONTENTS

LIST OF FIGURES

Figure		Page
2-1	Site Location Map	2
2-2	Detailed Site Basemap	3
3-1	Areal Extent of Groundwater Contaminant Plume	6
4-1	Well Layout for AS/SVE Pilot Test	8
4-2	Shan Graph for Vertical SVE Well	13
4-3	Shan Graph for Horizontal SVE Well	14
4-4	Map Showing Interpreted Air Sparge Radius of Influence	17

LIST OF TABLES

Table		Page
4-1	Data Recorded During SVE Pilot Test	11
4-2	Data Recorded During Air Sparge Test	16

LIST OF APPENDICES

Appendix A - Well Construction Diagrams and Lithology Logs

Appendix B - Specs for Pilot Test Equipment

1.0 INTRODUCTION

Foster Wheeler Environmental Corporation (Foster Wheeler Environmental) has been contracted by the Northern Division, Naval Facilities Engineering Command (NORDIV) to design and conduct a pilot test for air sparging/soil vapor extraction (AS/SVE) at Operable Unit No.3 (OU-3) Site 26, at the Naval Weapons Station (NWS) Earle located in Colts Neck, NJ. This report documents the results of the pilot test, which was conducted on May 18 and 19, 1999 in accordance with the approved Work Plan submitted to the Navy on February 26, 1999. All work described herein was performed under Delivery Order No. 0034 for Remedial Action Contract No. N62472-94-D-0398.

The objective for the pilot test was to acquire data concerning the site-specific hydrogeologic conditions, with particular emphasis on subsurface air-flow characteristics, so that a full-scale AS/SVE system can be designed and constructed for subsequent groundwater restoration. Shallow groundwater at Site 26 has been impacted by chlorinated hydrocarbons, which will be remediated through full-scale implementation of AS/SVE technology.

2.0 SITE LOCATION AND BACKGROUND

NWS-Earle is located in east-central Monmouth County in the town of Colts Neck, New Jersey Figure 2-1). Site 26 (OU-3) is located immediately southwest of Building GB-1, which is located on the Mainside portion of the NWS-Earle facility, at the intersection of Macassar and Midway Roads. Two railway lines run from the southwest to the northeast adjacent to the southern side of Building GB-1 (Figure 2-2). The site is fenced and topography is relatively flat, approximately 150 feet above MSL.

GB-1 was reportedly used for the reconditioning of munition casings and shells. Solvents were used in the reconditioning process. Spent solvents and wash waters were discarded into an unknown receptacle, possibly a collection tray at a former paint spray booth, which drained to the process leaching system. The GB-1 process leaching system was apparently used for disposal of trichloroethene (TCE), 1,2-dichloroethene (DCE), and/or related compounds.

The leaching system and associated sediments immediately northwest of Building GB-1 were removed/remediated in 1997-98, as described in the Site 26 Close-Out Report prepared by Foster Wheeler in July 1998. All drains inside Building BG-1 were also sealed to prevent any future discharge.

2.1 PREVIOUS INVESTIGATIONS

Several studies have been conducted at the site, dating back to the Initial Assessment Study in 1982. Site inspections and a Remedial Investigation/Feasibility Study (RI/FS) were conducted in the early 1990's after NWS-Earle was placed on the National Priorities List (NPL). A Phase II RI was completed in 1996, and included: a soil gas survey at 68 locations; installation and sampling of groundwater monitoring wells; soil sampling; "direct push" groundwater sampling

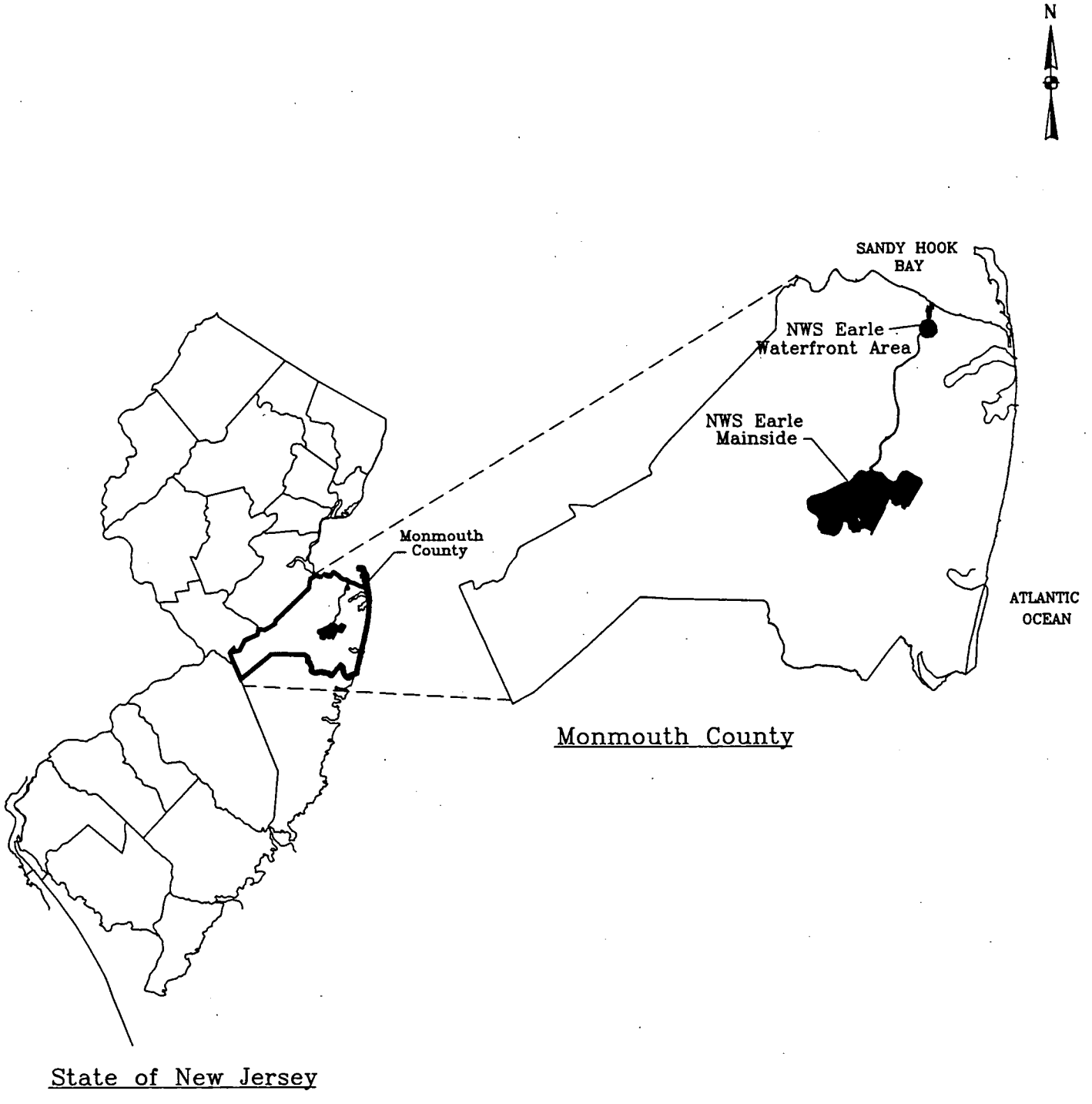

NOT TO SCALE

U.S. Navy RAC
NWS–Earle, Colts Neck, N.J.

Figure 2–1
Regional Site Map

FOSTER WHEELER ENVIRONMENTAL CORPORATION

earle\county

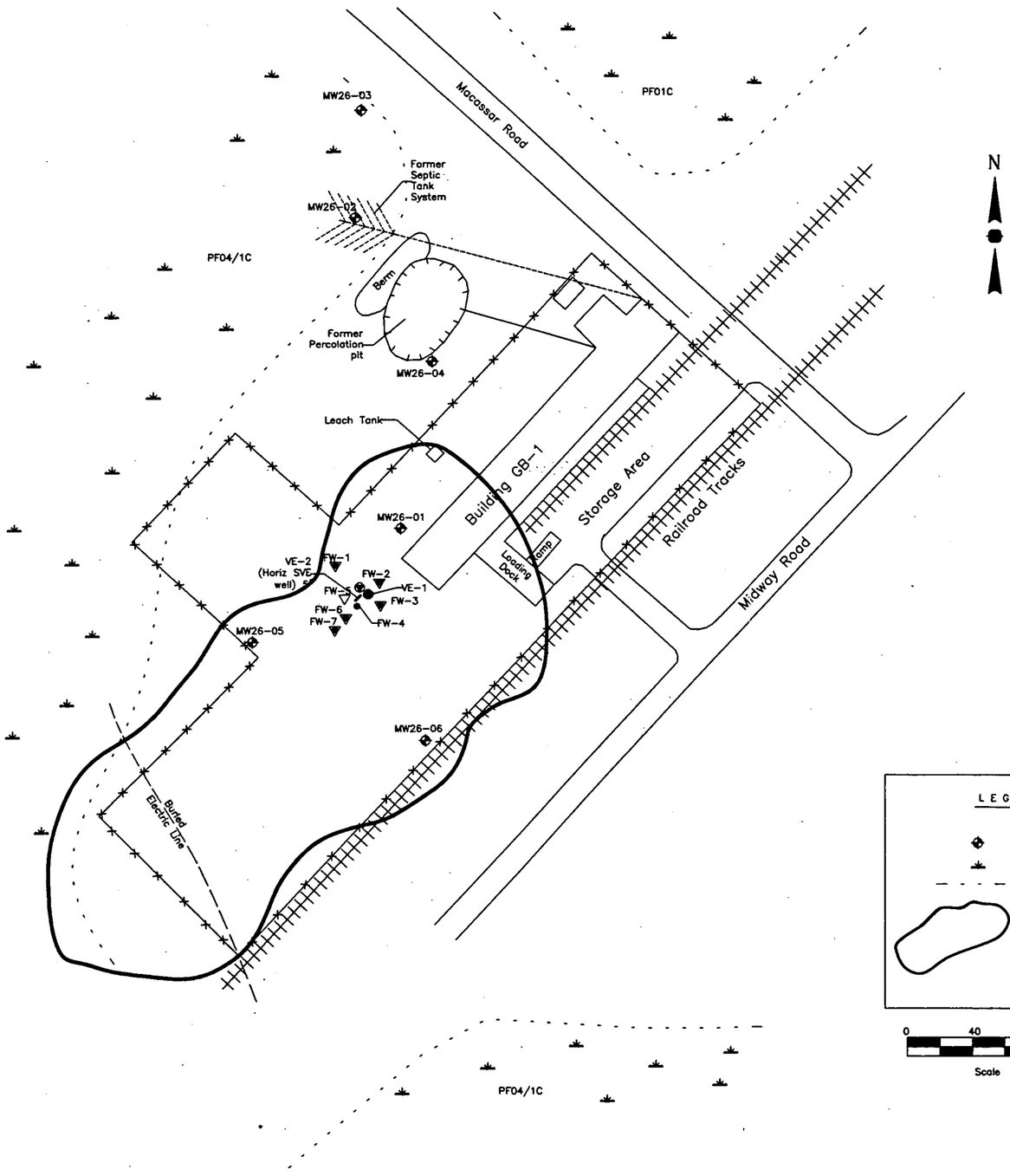

LEGEND

- MONITORING WELL LOCATIONS
- WETLANDS
- WETLANDS DELINEATION (SOURCE NJDEP/B & ROOT)
- APPROXIMATE AREAL EXTENT OF GROUNDWATER CONTAMINANT PLUME (Brown & Root, Dec 1997)

0 40 80 160

Scale 1" = 80'

navyrac\earle\site26\plumebase.dwg

DATE CREATED
LATEST CHANGE
CHANGED BY:

FOSTER WHEELER ENVIRONMENTAL

DESIGN: DR: CHK:
SUPV: CH ENG:
SUBMITTED BY: (TRM MEMBER) (TITLE) (DATE)
NORTHDIV DM: HD:
PPE: HD:
OFFICER IN CHARGE DIR:
APPROVED DATE

NAVAL FACILITIES ENGINEERING COMMAND
NORTHERN DIVISION
DEPARTMENT OF THE NAVY
LESTER PENNSYLVANIA

Figure 3-1
NWS Earle, Colts Neck, NJ
Site 26 Groundwater Containment Plume

APPROVED DATE
NORTHDIV FOR COMMANDER, NAVFAC

SEAL AREA

SAT TO DATE

CODE I.D. NO. 80091
SCALE : N.T.S.
SPEC. NO. 04-
CONSTRN. CONTR. NO.
NAVFAC DRAWING NO.
SHEET OF
SIZE: B
DIS. SH. NO.

navyrac\earle\site26\26base.dwg

DATE CREATED
LATEST CHANGE
CHANGED BY:

FOSTER WHEELER ENVIRONMENTAL

DSGN: DR: CH: CHK:
SUPV: CH. ENG.
SUBMITTED BY: (TITLE) (DATE)
(FIRM MEMBER)
NORTHDIV HD:
DM: HD:
FPC: DRC:
OFFICER IN CHARGE
APPROVED DATE

NAVAL FACILITIES ENGINEERING COMMAND
NORTHERN DIVISION
DEPARTMENT OF THE NAVY
LESTER PENNSYLVANIA

Figure 2-2
NWS Earle, Colts Neck, NJ
Site 26 Basemap

APPROVED
DATE NORTHDIV FOR COMMANDER, NAVFAC

SEAL AREA

SAT TO DATE

CODE I.D. NO. 80091
SCALE : N.T.S.
SPEC. NO. 04-
CONSTRN. CONTR. NO.
NAVFAC DRAWING NO.
SHEET OF
SIZE: B
DIS. SH. NO.

with on-site laboratory analysis; and cone penetrometer studies to delineate subsurface soil stratigraphy.

Groundwater samples collected from the direct-push samplers revealed an elongated plume of chlorinated compounds in shallow groundwater immediately southwest of Building GB-1. The contaminant plume is approximately 420 feet long by 150 feet wide, and appears to be confined to an upper sand aquifer which extends to a depth of approximately 25 feet. The upper sand aquifer is underlain by approximately 15 feet of low permeability silts and clays.

Based on the Feasibility Study conducted in 1997, the preferred remedial alternative for groundwater remediation at Site 26 is air sparging with soil vapor extraction (AS/SVE). This report documents the results of the AS/SVE pilot test, and provides site-specific information to be used for subsequent design of a full-scale system.

3.0 SITE GEOLOGY

Local topography at Site 26 is relatively flat, approximately 150 feet above sea level. Building GB-1 is no longer used for processing activities. The facility is used for warehousing and storage.

NWS-Earle is situated in the Coastal Plain Physiographic Province of New Jersey. The Coastal Plain consists of a series of seaward-dipping unconsolidated sediments of Cretaceous through Quaternary Age, deposited atop pre-Cretaceous bedrock. The Coastal Plain sediments were deposited in continental, coastal, and marine depositional environments, and consist of numerous sequences of sand and gravel, silt, and clay. These deposits generally strike northeast-southwest, and dip to the southeast at 10 to 60 feet per mile. The Coastal Plain section is nearly 900 feet thick beneath NWS-Earle.

Site 26 occurs in the outcrop area of the Kirkwood Formation, which ranges in thickness between 60 to 100 feet in the area. Soil borings at Site 26 have encountered light yellowish-brown sands and gravel (considered representative of upland gravel) and brownish-yellow, brown and gray, fine- to medium- and medium- to coarse-grained sands (indicative of the Kirkwood Formation). The sandy units are separated by intercalated silts, silty clay, and clay layers. Appendix A contains lithologic logs for the first three wells installed as part of the AS/SVE Pilot Test.

3.1 GROUNDWATER

Shallow groundwater at Site 26 occurs in part of the Kirkwood-Cohansey aquifer system, which is one of five major aquifer systems within the New Jersey Coastal Plain. The Kirkwood-Cohansey is a source of water throughout Monmouth County, and is reportedly used by residents within a 1-mile radius of NWS-Earle. All facilities located in the Mainside Administration area are connected to public water supply (New Jersey American Water). There are several potable wells operating on-Base, the closest of which is approximately 4,000 feet northeast (upgradient) of Site 26.

Shallow groundwater at Site 26 occurs under unconfined conditions within the upper sand unit (approximately 25 feet thick). A lower sand unit is separated from the upper sand by

approximately 15 feet of low permeability silt and clay. The lower sand unit is approximately 25 feet thick, and is underlain by clayey silt. According to information provided in the 1996 RI Report, depth to groundwater ranges between 11-14 feet below ground surface (bgs), with horizontal groundwater flow toward the southwest at approximately 0.0045 feet/foot. There does not appear to be a significant seasonal variation in groundwater flow direction. Hydraulic conductivity for the upper sand aquifer has been estimated at between 1 to 5 feet/day (3.85×10^{-4} to 1.92×10^{-2} cm/sec).

3.2 NATURE AND EXTENT OF GROUNDWATER CONTAMINATION

Based on groundwater sampling conducted as part of the RI/FS, groundwater immediately southwest of Building GB-1 has been contaminated with chlorinated hydrocarbons (most significantly TCE, PCE, and DCE). Figure 3-1 illustrates the areal extent of the contaminant plume. TCE concentrations of up to 4,800 ppb have been detected within the outlined plume.

The probable source for the groundwater contamination is believed to have been a former septic system located adjacent to Building GB-1. This area was partially remediated in 1998, and the results are detailed in the Site 26 - Building GB-1 Close Out Report.

In accordance with the approved Record of Decision (ROD) for Site 26, groundwater at the site will be remediated via Air Sparge/Soil Vapor Extraction (AS/SVE). Remediation will be accomplished by sparged (injected) air volatilizing VOCs in the saturated zone, and capture of volatilized VOCs via soil vapor extraction. In addition, although chlorinated compounds are not readily biodegraded, natural biodegradation will be enhanced by increasing the dissolved oxygen content within the shallow aquifer. It should be noted that vinyl chloride is a degradation product of PCE/TCE/DCE.

4.0 AIR SPARGE/SVE PILOT TEST

Data obtained during the pilot test has been tabulated and evaluated to determine the optimal operating parameters and well spacing for the full-scale AS/SVE system. Vacuum and air flow rates have been plotted to evaluate air flow distribution and radius of influence (ROI) for SVE. The radius of influence for air sparging has been determined largely by observation of bubbling in air sparge monitoring wells installed for the pilot test.

4.1 WELL LOCATIONS/CONSTRUCTION

Figure 4-1 illustrates the well locations used for the AS/SVE pilot test at Site 26. This area was chosen for the pilot test due to the reported presence of a TCE "hotspot", and proximity to existing utilities in nearby Building GB-1.

Spacing and location of the vapor extraction (VE), air sparge (AS), and combination AS/SVE monitoring wells was designed to ensure the air flow/ROI was properly evaluated upgradient, downgradient, and sidegradient to groundwater flow. Past experiences applying this technology to the Cohansey aquifer in South Jersey have shown anisotropic characteristics for sparged air flow.

4.1.1 Drilling Methods and Soil Descriptions

All vertical wells were installed using hollow-stem auger drilling techniques. 8.25-inch augers were used to drill the borehole for the 4-inch diameter vertical SVE well. 6.25-inch augers were used to drill boreholes for the 2-inch diameter air sparge well and all AS/SVE monitoring wells. The SVE and VE monitoring wells were drilled to a depth of ten (10) feet bgs. The air sparge well was drilled to a depth of approximately 23 feet bgs, while all AS/SVE monitoring wells were completed to a depth of approximately 20 feet bgs. A Case 580 backhoe was used to excavate a trench for installation of a five-foot long horizontal SVE well.

To verify the local stratigraphy within the pilot test area, continuous split-spoon sampling was conducted during borehole drilling at locations FW-1, FW-2, AS-1, and FW-7. The FWENC Site Geologist logged all samples in accordance with standard Unified Soil Classification System (USCS) procedures, paying particular attention to variation is grain-size and interlayering of fine-grained materials (which would impact the vertical/horizontal permeability relationships). The upper sand aquifer generally consists of fine-to-coarse grained, moderately-to-well sorted sands, with numerous fining upward sequences (USCS code SW to SP). Pebbles and small gravel are sometimes present at the base of the fining upward intervals. With the exception of the silty clay found at the bottom of the aquifer, there are no vertically- or laterally-extensive low permeability layers (silts or clays) within the upper sand aquifer at this site. No evidence of contamination was observed (or measured via FID) in any of the soil cuttings during well installation.

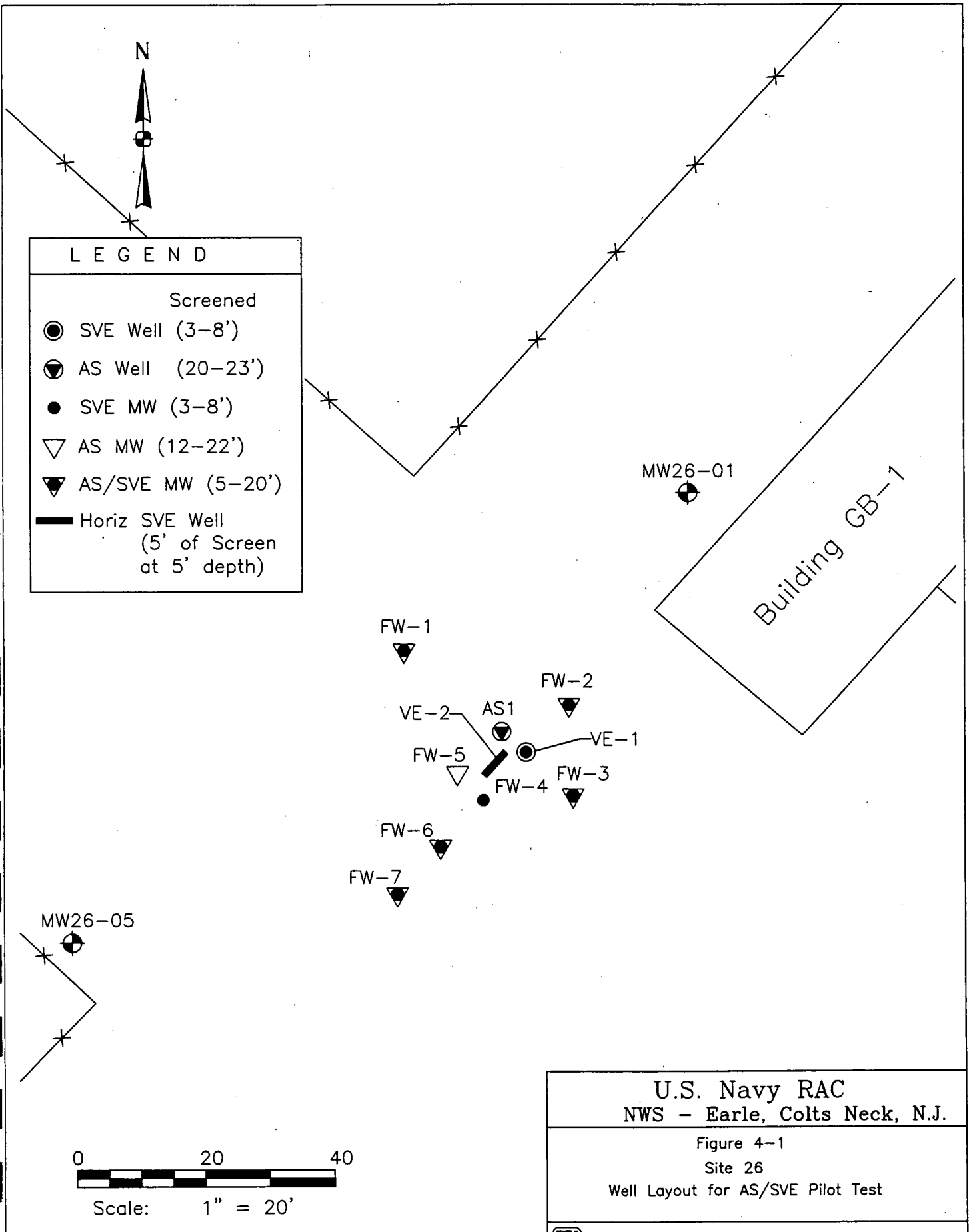

U.S. Navy RAC
NWS – Earle, Colts Neck, N.J.

Figure 4–1
Site 26
Well Layout for AS/SVE Pilot Test

FOSTER WHEELER ENVIRONMENTAL CORPORATION

earle\site26\fig4–1

4.2.2 Well Construction

Well construction logs and borehole lithology (where recorded) are provided in Appendix A.

During installation of the pilot test wells, the water table was encountered a few feet shallower than anticipated (approximately 8.5 to 9 feet below ground surface). Presence of a shallow groundwater table presents potential problems for AS/SVE remediation technology to the possibility of producing water and/or blocking off portions of the well screen when a vacuum is applied to the SVE wells; and, the increased potential for "short-circuiting" of air from ground surface. As a contingency option for this site, a short horizontal SVE well was installed in addition to the planned vertical well, to evaluate the potential for using horizontal SVE wells in the full-scale design at this site.

SVE monitoring wells

The SVE wells were installed using 4-inch diameter, Schedule 40 PVC screen and riser. A 5-foot section of .03-slotted screen was installed at a depth of 3-8 feet bgs for the vertical SVE well (VE-1). Morie #2 (or equivalent) sandpack was installed in the annulus to approximately one-half foot above the top of screened interval. A bentonite seal was installed atop the sandpack to ground surface. For the horizontal SVE well (VE-2), a 5-foot section of .03-slotted screen was installed horizontally at a depth of approximately 5 feet bgs. A backhoe was used to excavate the 5-foot deep trench in which the PVC screen was placed. Sandpack material was placed beneath, adjacent to, and immediately above the horizontal section of screen. One end of the horizontal screen was capped, while 4-inch diameter Schedule 40 PVC riser pipe was attached to the other end and extended two feet above ground surface. Plastic sheeting was placed above the sandpacked horizontal screen to reduce short-circuiting of air from directly above. Native soils were backfilled atop the plastic sheeting to ground surface.

VE monitoring well

Five of the seven monitoring wells installed as part of the AS/SVE pilot test were designed as combination AS/SVE monitoring wells. One monitoring well (FW-4) was installed to monitor the unsaturated zone only (screened 3-8 feet bgs), while another (FW-5) was installed to monitor the saturated zone only (screened 12-22 feet bgs). All monitoring wells were installed using 2-inch diameter, Schedule 40 PVC screen (.02-slot) and riser. The combination AS/SVE monitoring wells were screened from approximately 5-20 feet bgs.

The monitoring wells were capped with a screw-on sealing cap. Holes were subsequently drilled into the caps and brass fittings were installed to facilitate vacuum measurements and collection of VOC samples (as needed).

Air sparge well

The air sparge (AS-1) well was installed using 2-inch diameter, Schedule 40 PVC screen and Schedule 80 PVC riser. A three-foot section of 0.02 continuous wound-wire screen was installed at a depth of 20-23 feet bgs. Morie #1 (or equivalent) sandpack was installed in the annulus to approximately one foot above the screened interval. A two-foot thick bentonite seal was installed above the sandpack, followed by bentonite grout to ground surface.

All wells screened in the saturated zone of the upper sand aquifer were developed via submersible pump until extracted groundwater was relatively turbid-free. Purge waters were containerized in DOT-approved 55-gallon drums. With NJDEP approval, the purge water was subsequently pumped through a bag filter and two granular-activated carbon drums (in series) prior to discharging the water back to ground on-site.

4.2 PILOT TEST EQUIPMENT

A portable, trailer-mounted AS/SVE pilot test unit was rented from Acqua Bella, of Bordentown, NJ. The SVE equipment consisted of a 1.5hp regenerative blower (Rotron EN454W58L) discharging to two 55-gallon vapor-phase granular activated carbon drums, connected in series. The SVE blower included a vacuum gauge (measuring inches of water vacuum) and dilution/bleed valve used to adjust flow rate and vacuum from the VE wellhead. Air flow rates for the SVE blower were determined directly from curves supplied with the blower (Appendix B). The air sparge equipment consisted of a 2hp rotary vane blower (Rotron PRP230AW58), with a Dwyer Ratemaster flowmeter, pressure gauge (psi), bleed valve to control flow, and pressure relief valving. Temperature was recorded at the SVE wellhead using a bimetal thermometer inserted through the well casing/riser.

A capped brass fitting was installed at each AS/SVE monitoring well to enable FWENC personnel to monitor vacuum and collect air samples (as needed) throughout the pilot test area. The monitoring wells were also fitted with quick-disconnect caps to enable measurement of dissolved oxygen and observe for bubbling during the air sparge test.

4.3 SVE TEST RESULTS

Table 4-1 presents a summary of data recorded during the SVE pilot test. The vertical SVE well (VE-1) was tested at various rates for approximately 3.5 hours on May 18, 1999. The horizontal well (VE-2) was tested for approximately one hour on May 19, 1999. VE-1 was retested for 0.5 hours on May 16 to see if overnight precipitation altered test conditions (due to increased soil moisture).

The vertical well (VE-1) SVE test was started at 36 inches of water vacuum (approximately 80 SCFM). The applied vacuum was gradually increased during the next 2.5 hours to a maximum of 50 inches of water. During the last 30 minutes of the test, the vacuum was reduced to 24 inches water.

A review of the vacuum measurements collected at each monitoring point indicates that a vacuum of between 36-40 inches of water is optimal for SVE using vertical extraction wells at this site. Higher applied vacuums (between 45-50 inches) did not result in significantly higher vacuum readings at the distal monitoring points, and in fact, reduced the overall air flow rate. The lack of increased measured vacuum away from the SVE well may be due to pulling the shallow water table up into the screened interval, thereby reducing the length of screen open for air flow. Reducing the vacuum to 24 inches of water column resulted in a significant decrease in vacuum measurements at each of the AS/SVE monitoring points.

TABLE 4-1

NWS-EARLE
Site 26 SVE Pilot Test

DATE	TIME	VE-1				FW-1	FW-2	FW-3	FW-4	FW-5	FW-6	FW-7	Comments
		Vac (in. H_2O)	Rate (SCFM)	Temp (degF)	VOCs (ppm)	Vac (in. H_2O)	Vac (in. H_2O)	Vac (in. H_2O)	Vac (in. H_2O)	Vac (in. H_2O)	Vac (in. H_2O)	Vac (in. H_2O)	
				Distance from VE-1 (feet) =>		24	12	10	10	10	20	30	
18-May	1315	36	80	66	----								Startup @ 1312
	1333	36	80	65	0	0.30	0.75	2.50	2.00	Screened	0.80	0.50	VE-2 = 7"H_2O vac.
	1353	38	75	65	----	0.20	0.60	2.50	1.90	totally	0.80	0.45	VE-2 = 6.5"H_2O vac.
	1413	40	70	65	----	0.30	0.60	2.50	1.90	in	0.75	0.40	VE-2 = 6.5"H_2O vac.
	1440	45	66	65	----	0.35	0.75	2.90	2.15	saturated	0.85	0.50	VE-2 = 7"H_2O vac.
	1500	45	66	65	0	0.25	0.75	2.70	2.10	zone.	0.85	0.55	VE-2 = 7"H_2O vac.
	1525	50	50	65	----	0.30	0.75	3.00	2.25	Used	0.80	0.50	VE-2 = 7"H_2O vac.
	1545	50	50	65	0	0.25	0.86	2.95	2.25	for	0.85	0.55	VE-2 = 7"H_2O vac.
	1605	24	100	65	----	0.10	0.25	1.35	1.00	sparge	0.40	0.20	
	1625	24	100	65	----	0.10	0.40	1.40	1.00	test	0.40	0.20	VE-2 = 4.5"H_2O vac.
				Using VE-2									
				Distance from VE-2 (feet) =>		23	16	13	6	10	15	26.5	
19-May	825	32	88	----	----								
	850	32	88	----	0	0.60	1.00	4.10	4.70		1.60	1.00	
	855	32	88	----	----	0.65	1.15	4.20	4.70		1.75	1.10	VE-1 = 10"H_2O vac.
				Using VE-1									
19-May	938	32	85	65	----	0.2	0.65	2.35	1.7		0.7	0.4	VE-2 = 6"H_2O vac

Notes: Started SVE test at 1312 hours at 36 inches of water column vacuum. Flow rate based on performance curve for Rotron EN454 blower.

Steady rain at 1415 hours. Stopped at 1420 hours. Misting/light rain at 1500 hours; stopped at 1515 hours.

Increased vacuum to 45 inches at 1420.

Increased vacuum to 50 inches at 1505.

Decreased vacuum to 24 inches at 1547.

VE-2 consists of 5 feet of screen placed horizontally at 5 feet depth, immediately north of and between VE-1 and AS-1.

Although results from the May 18 test indicate SVE using vertical extraction wells is feasible at this site, the SVE blower was connected to the horizontal SVE well (VE-2) on May 19 to evaluate vapor extraction using horizontal wells. The maximum vacuum achievable with the horizontal well was 32 inches of water column (approximately 88 SCFM). Measured vacuum at the AS/SVE monitoring points was essentially twice that recorded during testing with the vertical well.

Since higher vacuum could not be achieved, and rates appeared to have stabilized, the SVE test using the horizontal well was terminated after only one hour. The blower was reconnected to the vertical well (VE-1), and testing revealed vacuum readings very similar to the day before, indicating subsurface conditions had not been significantly altered by the overnight precipitation.

Air samples were collected periodically during the SVE testing via Tedlar bag and were field analyzed using a PhotoVac Flame Ionization Detector (FID) calibrated to methane. As expected, since contamination at this site is believed to be confined to the saturated zone, VOCs were not detected at any time during the SVE tests.

A Chevron-developed spreadsheet model (Peargin, 1997) based on the Shan Model (Shan, 1992) was used to evaluate the site-specific horizontal to vertical permeability ratio and overall radius of influence at the site. Application of the Shan model is an iterative process; however, Figures 4-2 and 4-3 illustrate the best-fit results of these analyses.

Figure 4-2, using data from VE-1 at 36 inches of vacuum, shows a best-fit curve of soil vacuum versus radial distance based on a Kh/Kv ratio of 2.5. The effective radius of influence (ROI) for soil vapor extraction is typically between 0.1 and 1% of total well vacuum. Based on this rule-of-thumb, the ROI for Site 26 using vertical SVE wells is approximately 30 feet.

Figure 4-3, shows the Shan best-fit curve based on data collected during the test at horizontal well VE-2. The iterative process resulted in a Kh/Kv estimate of 20, with a ROI of approximately 60 feet. The higher Kh/Kv ratio is a function of well construction. Consider the following points:

- The entire 5-foot length of screen at VE-2 is placed within a 6-8 inch thick horizon at 5 feet depth.
- The entire length of screen is open to air flow in the unsaturated zone, whereas some portion of the screen in the vertical well was likely being blocked off by upwelling waters from the shallow water table (especially at higher vacuum levels). The large open area at VE-2 resulted in lower vacuum and higher air flow rates.
- Placement of the plastic sheeting above the horizontal screen minimized short-circuiting of air flow from directly above, resulting in a higher proportion of lateral air flow.

FIGURE 4-2

NWS-EARLE Site 26 SVE Pilot Test (Vert. SVE Well)

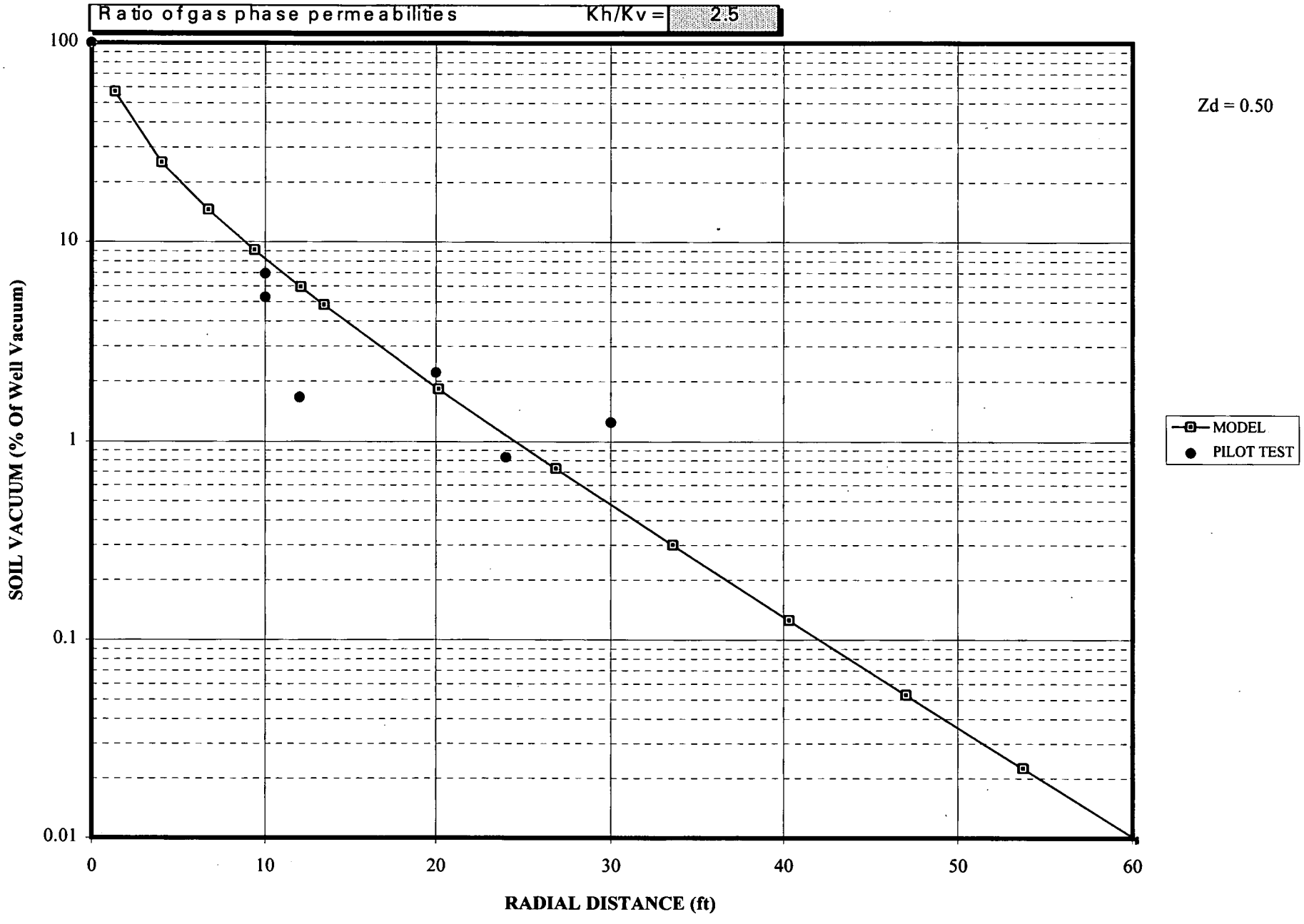

FIGURE 4-3

NWS-EARLE Site 26 SVE Pilot Test (Horz. SVE Well)

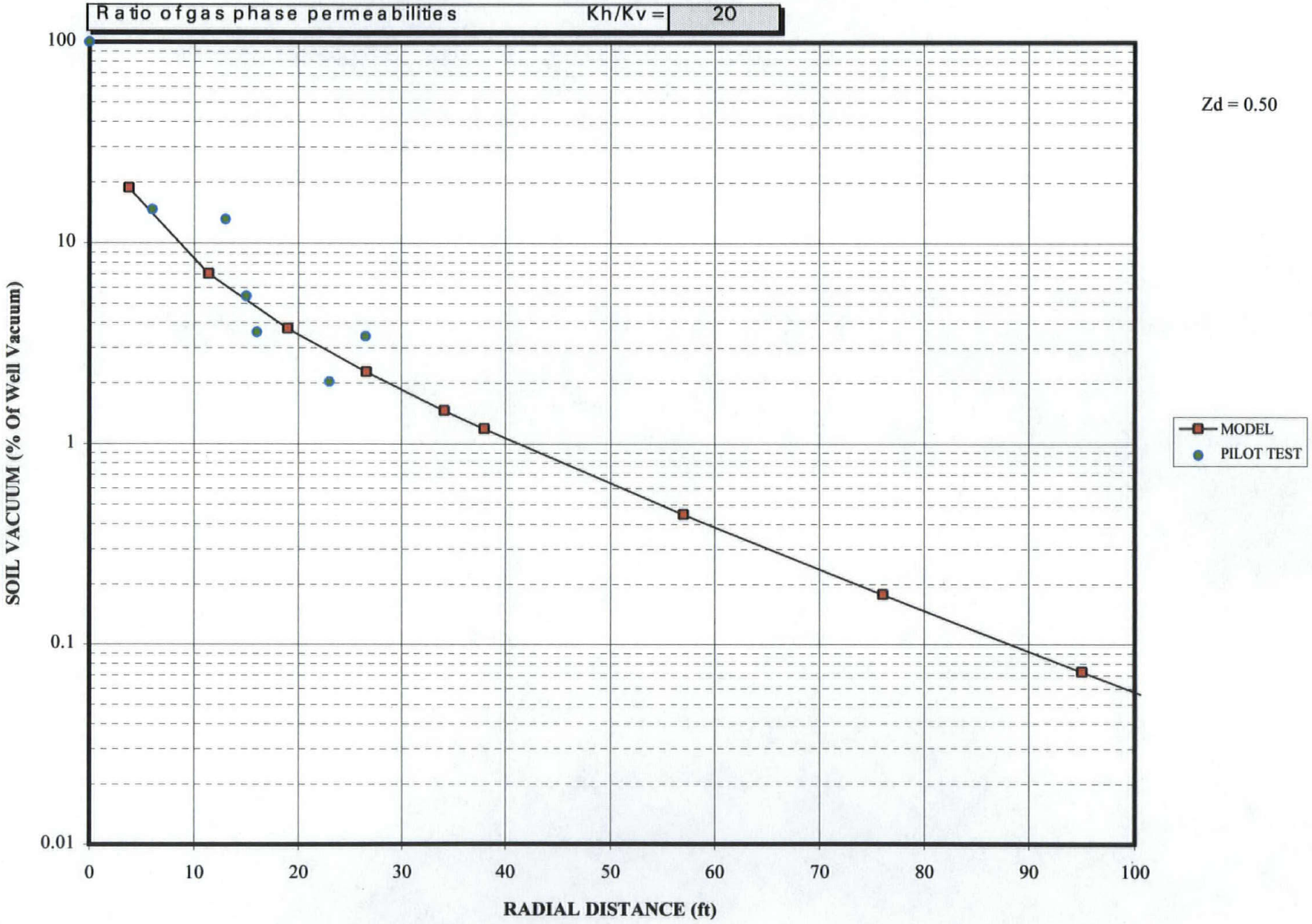

4.4 AIR SPARGE TEST RESULTS

An air sparge test was conducted for approximately 3.5 hours on May 19, 1999. The vapor extraction blower was also operated during the sparge test to collect any VOCs volatilized by the sparging process. Since preliminary field observations indicated the horizontal VE well was more efficient than the vertical well, vapors were collected from VE-2 during the sparge test.

Table 4-2 presents a record of data/observations collected during the air sparge test. Sparging was initiated at 1300 hours (approximately 5 SCFM @ 12 psi). Although dissolved oxygen (DO) levels were measured from each AS/SVE monitoring point prior to and during the test, the DO meter did not appear to be functioning properly. Therefore, the sparging ROI for this pilot test has been based primarily on observation of bubbles in the various AS/SVE monitoring wells.

Bubbling became noticeable at monitoring points FW-3 and FW-5 approximately 50 minutes after sparging startup. The intensity of the bubbling increased as the sparge flow rate was gradually increased to a maximum of 12 SCFM. (*Note: Although the manufacturer's performance curve data indicate this model rotary vane blower should be capable of over 20 SCFM at 12 psi, the Dwyer flowmeter connected to the discharge side of the blower never indicated more than 12 SCFM*).

Figure 4-4 illustrates the interpreted ROI for sparging based on visual observations of bubbling intensity during the sparge test. The pilot test results indicate sparging will have an asymmetrical ROI, extending 20-25 feet in a downgradient direction, but less than 10 feet in the upgradient direction. The asymmetrical shape of the sparge ROI is similar to that seen at another South Jersey Cohansey aquifer sparge site. Sparged air will follow the path of least resistance. In many cases, channeling will develop over time (one of several reasons to consider cycling/pulsing sparged air). The preferential downgradient ROI is likely a reflection of the sparged air following the path of least resistance (downgradient), due to the increased hydraulic head in the upgradient direction (local groundwater flow is toward the southwest).

VOCs were not detected in the extracted vapor stream during the sparge test. However, when the FID was inserted into the top of the wellhead at monitoring point FW-5 (screened only in the saturated zone), up to 27 ppm total VOCs were measured. The lack of VOC detections during this AS/SVE pilot test may be due to a significant amount of dilution occurring from short-circuiting atmospheric air flow.

TABLE 4-2

NWS-EARLE
Site 26 SVE/AS Pilot Test

		AS-1		VE-2			FW-1		FW-2		FW-3		FW-5		FW-6		FW-7		
	Distance from AS-1 (ft) =>			2			20		13		14		10		20		30		
DATE	TIME	Pressure (psi)	Rate (SCFM)	Vac (inH2O)	Rate (SCFM)	VOCs (ppm)	Observ. Bubbling	DO (mg/L)	Observ. Bubbling	DO (mg/L)	Observ. Bubbling	DO (mg/L)	Observ. Bubbling	DO (mg/L)	Observ. Bubbling	DO (mg/L)	Observ. Bubbling	DO (mg/L)	Comments
19-May	1300	12	5	30	90	0	---	12.2	---	11.7	---	11.8	---	11.4	---	10.4	---	11.8	
	1340	12	6	---	---	---	none	10.6	---	10.4	---	6	---	---	---	---	---	---	
	1345	12	6	---	---	---	none	10.6	---	9.4	---	6	---	9	---	3.6	---	10.6	
	1410	12	6	---	---	---	none	10	---	10.2	moderate	10.2	moderate	12.6	slight	8.2	none	8.6	9ppm VOCs at FW-5
	1435	12	6	32	88	0	slight	---	none	---	vigorous	---	moderate	---	moderate	---	none	---	
	1445	12	10	---	---	---	---	---	---	---	---	---	---	---	---	---	---	---	
	1520	12	10	32	88	0	slight	9.8	none	9.8	vigorous	12.2	vigorous	14	moderate	9.2	occasional	10	27ppm VOCs at FW-5
	1640	12	12	32	88	0	slight	---	slight	---	strong	---	vigorous	---	vigorous	---	occasional	---	No VOCs detected at FW-5

Notes: Increased rate to 10 SCFM @12 psi at 1445.

YSI 50B Dissolved Oxygen meter appears to be malfunctioning. Baseline DO too high? Values should increase w/observed bubbling

Sparge blower overheated at 1550.....able to restart at 1610 hours at 10 SCFM

No VOCs detected in extracted air at VE-2 and none at carbon effluent.

SCFM rate as read from Dwyer Ratemaster flowmeter attached to discharge line of sparge blower.

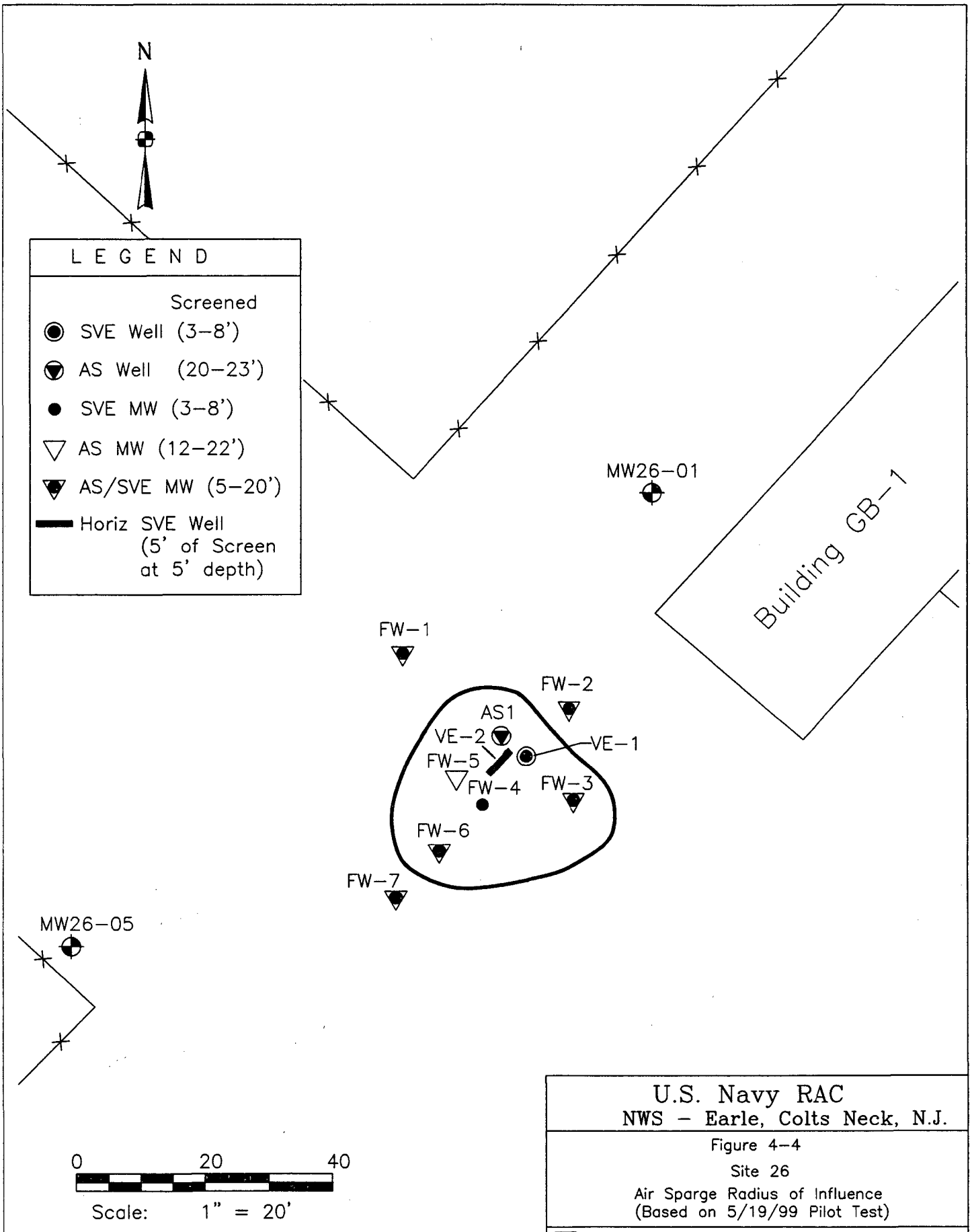

U.S. Navy RAC
NWS – Earle, Colts Neck, N.J.

Figure 4–4
Site 26
Air Sparge Radius of Influence
(Based on 5/19/99 Pilot Test)

FOSTER WHEELER ENVIRONMENTAL CORPORATION

earle\site26\fig4–1

5.0 RECOMMENDATIONS FOR FULL-SCALE DESIGN

The AS/SVE pilot test indicates the technology is viable for remediating groundwater contaminated with volatile organic compounds at Site 26. The radius of influence measured for vapor extraction and sparging at this site is typical for the type of geologic strata present at the site.

Based on the pilot test results, the full-scale system should be designed using horizontal SVE wells, with a well spacing of up to 120 feet for vapor extraction. Plastic sheeting (or other low permeability cover) should be placed directly above the horizontal SVE well screens to minimize short-circuiting of atmospheric air in the immediate vicinity of each well. The air sparge well network should be designed using the asymmetrical 10-20 foot ROI described above in Section 4.4. Both the SVE and sparge well networks should be designed to eliminate/minimize stagnation zones, either by varying flow rates, or simply operating different wells at different times. The SVE network will be sized to fully capture the area impacted by sparged air.

Since VOCs were not detected in the extracted air stream during the pilot test, designers will have to estimate full-scale VOC extraction levels (emissions) based on historical groundwater analytical data. Considering the TCE/DCE concentrations detected in groundwater and the significant amount of dilution that is likely to occur in the extracted air stream (unless the site is covered with a low-permeability cap/liner), the most cost-effective treatment of extracted vapors will likely be accomplished using large vapor-phase granular activated carbon units. If significant levels of vinyl chloride are detected in the extracted air stream, more aggressive treatment, such as thermal or catalytic oxidation, may be required.

6.0 REFERENCES

Peargin, 1997. Spreadsheet program using Shan Analytical Model to determine gas-phase permeability ratio from SVE pilot test vacuum data. Developed by T. Peargin, Chevron Research and Technology Corporation. Obtained at NGWA short-course titled, Designing Air-based In Situ Soil and Groundwater Remediation Systems.

Shan, 1992. Analytical solutions for steady state gas flow to a soil vapor extraction well, by C. Shan, R.W. Falta, and I. Javandel. Water Resource Research, Vol.28, No.4. April 1992, Pgs. 1105-20.

APPENDIX A

WELL CONSTRUCTION DIAGRAMS AND LITHOLOGY LOGS

FOSTER WHEELER ENVIRONMENTAL CORPORATION

MONITORING WELL CONSTRUCTION SKETCH

PROJECT NWS–Earle, Site 26 SVE/AS Pilot

CONTRACT NO. US NAVY RAC

DRILLING SUBCONTRACTOR CT&E Drilling

DRILLER

DRILLING METHOD HSA

MONITORING WELL NUMBER AS–1

DATE OF WELL INSTALLATION 5/3/99

DATE OF WELL DEVELOPMENT 5/4/99

GEOLOGIST D. Walsh/C.Joblon

DEPTH FROM GROUND SURFACE

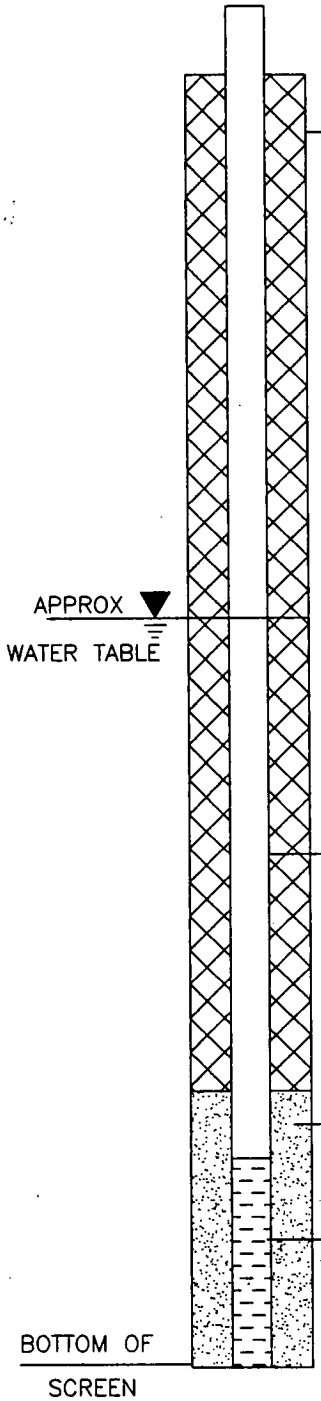

0'

TYPE OF SEAL BENTONITE SLURRY

EMPLACEMENT METHOD TREMIE

9' APPROX WATER TABLE

I.D. OF RISER PIPE 2" SCHED 80

TYPE OF RISER PIPE PVC

19'

20'

SIZE OF FILTER SAND #1 MORIE SANDPACK

EMPLACEMENT METHOD POURED

I.D. OF SCREEN 2" X 3' LG

SLOT SIZE OF SCREEN .02"

TYPE OF SCREEN CONTINUOUS WOUND WIRE

23' BOTTOM OF SCREEN

FOSTER WHEELER ENVIRONMENTAL CORPORATION

MONITORING WELL CONSTRUCTION SKETCH

PROJECT NWS–Earle, Site 26 SVE/AS Pilot

CONTRACT NO. US NAVY RAC

DRILLING SUBCONTRACTOR CT&E Drilling

DRILLER

DRILLING METHOD HSA

MONITORING WELL NUMBER VE–1

DATE OF WELL INSTALLATION 4/30/99

DATE OF WELL DEVELOPMENT

GEOLOGIST D. Walsh/C.Joblon

DEPTH FROM GROUND SURFACE

0'

.5'

2.5'

3'

8'

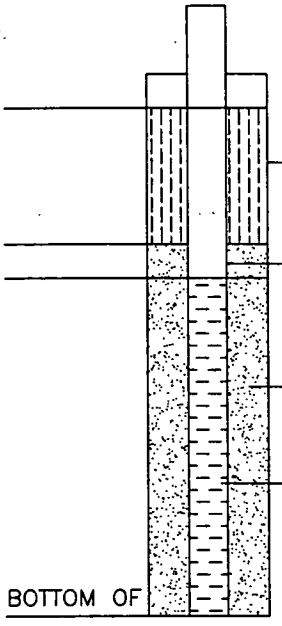

BOTTOM OF SCREEN APPROX

WATER TABLE 8.5–9'

TYPE OF SEAL BENTONITE SLURRY

EMPLACEMENT METHOD TREMIE

I.D. OF RISER PIPE 4" SCHED 40

TYPE OF RISER PIPE PVC

SIZE OF FILTER SAND #2 MORIE SANDPACK

EMPLACEMENT METHOD POURED

I.D. OF SCREEN 4" X 5' LG

SLOT SIZE OF SCREEN .03"

TYPE OF SCREEN SLOTTED PVC

FOSTER WHEELER ENVIRONMENTAL CORPORATION

MONITORING WELL CONSTRUCTION SKETCH

PROJECT NWS-Earle, Site 26 SVE/AS Pilot

CONTRACT NO. US NAVY RAC

DRILLING SUBCONTRACTOR CT&E Drilling

DRILLER

DRILLING METHOD HSA

MONITORING WELL NUMBER FW-2

DATE OF WELL INSTALLATION 4/29/99

DATE OF WELL DEVELOPMENT 5/3/99

GEOLOGIST D. Walsh/C.Joblon

DEPTH FROM GROUND SURFACE

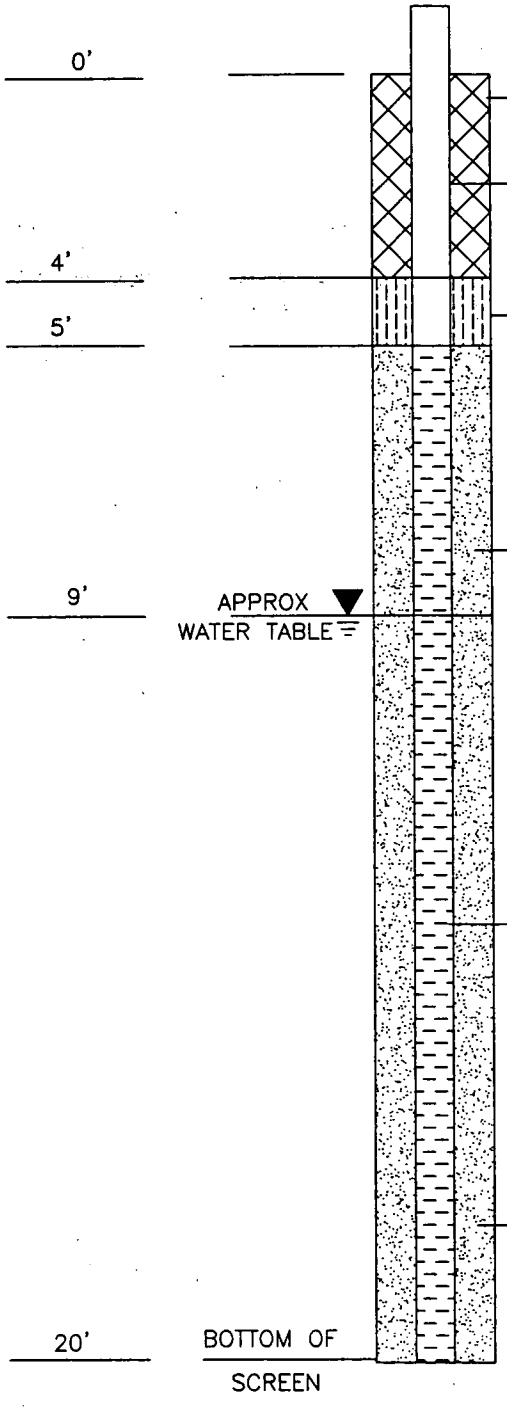

TYPE OF SURFACE SEAL BENTONITE GROUT

I.D. OF RISER PIPE 2" SCHED 40

TYPE OF RISER PIPE PVC

TYPE OF SEAL BENTONITE PELLETS

EMPLACEMENT METHOD POURED

SIZE OF FILTER SAND #2 MORIE SANDPACK

EMPLACEMENT METHOD POURED

I.D. OF SCREEN 2" X 15' LG

SLOT SIZE OF SCREEN .02"

TYPE OF SCREEN SLOTTED PVC

SIZE OF FILTER SAND #1 MORIE SANDPACK

EMPLACEMENT METHOD POURED

FOSTER WHEELER ENVIRONMENTAL CORPORATION

MONITORING WELL CONSTRUCTION SKETCH

PROJECT NWS–Earle, Site 26 SVE/AS Pilot

CONTRACT NO. US NAVY RAC

DRILLING SUBCONTRACTOR CT&E Drilling

DRILLER

DRILLING METHOD HSA

MONITORING WELL NUMBER FW–3

DATE OF WELL INSTALLATION 4/29/99

DATE OF WELL DEVELOPMENT 5/3/99

GEOLOGIST D. Walsh/C.Joblon

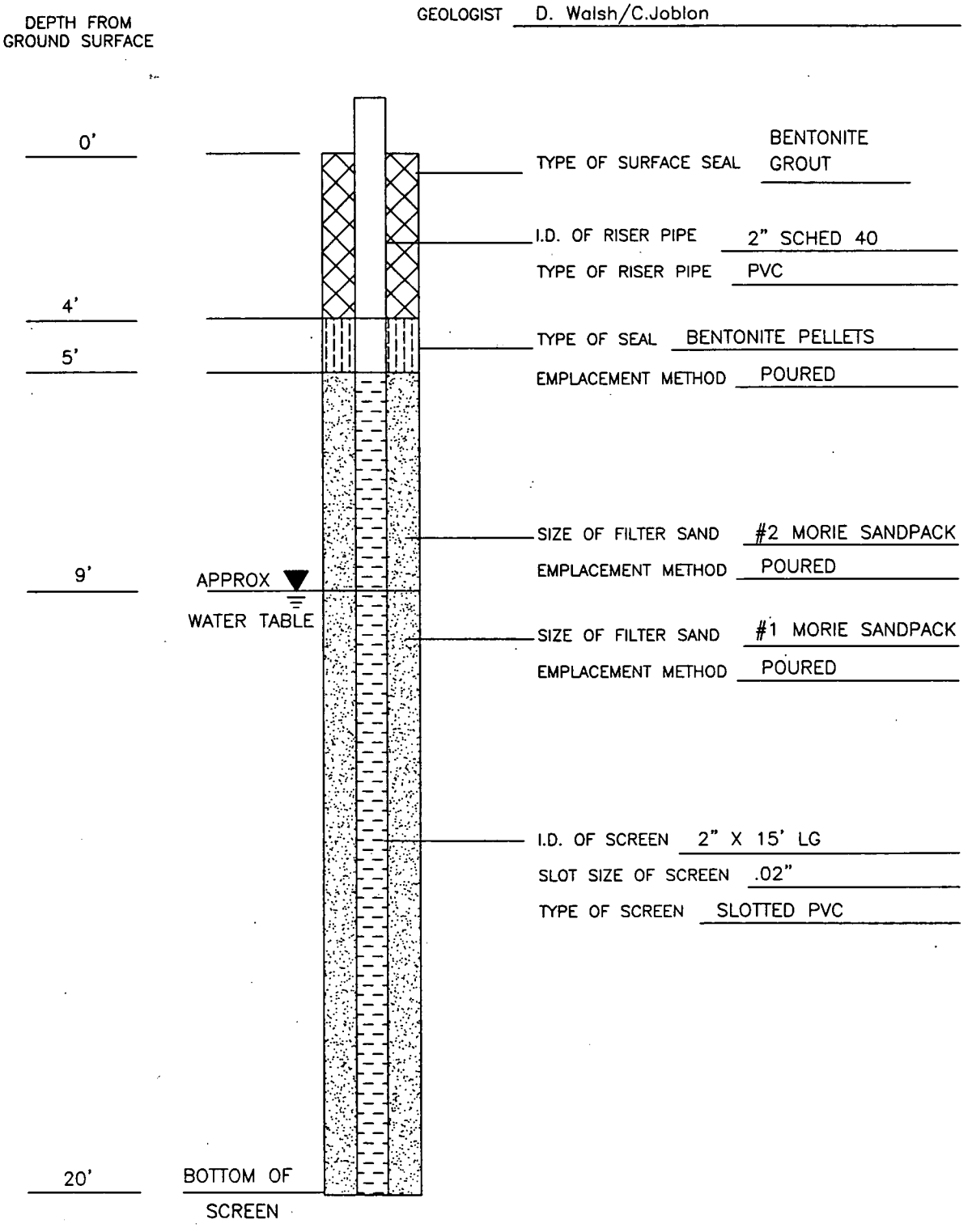

FOSTER WHEELER ENVIRONMENTAL CORPORATION

MONITORING WELL CONSTRUCTION SKETCH

PROJECT NWS–Earle, Site 26 SVE/AS Pilot

CONTRACT NO. US NAVY RAC

DRILLING SUBCONTRACTOR CT&E Drilling

DRILLER

DRILLING METHOD HSA

MONITORING WELL NUMBER FW–4

DATE OF WELL INSTALLATION 4/3/99

DATE OF WELL DEVELOPMENT ——

GEOLOGIST D. Walsh/C.Joblon

DEPTH FROM GROUND SURFACE

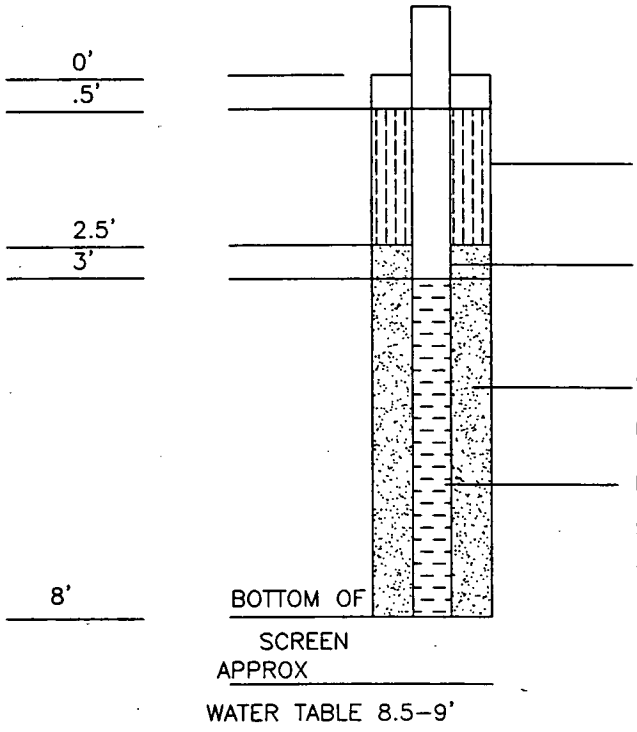

TYPE OF SEAL BENTONITE SLURRY

EMPLACEMENT METHOD POURED

I.D. OF RISER PIPE 2" SCHED 40

TYPE OF RISER PIPE PVC

SIZE OF FILTER SAND #2 MORIE SANDPACK

EMPLACEMENT METHOD POURED

I.D. OF SCREEN 2" X 5' LG

SLOT SIZE OF SCREEN .03"

TYPE OF SCREEN SLOTTED PVC

FOSTER WHEELER ENVIRONMENTAL CORPORATION

MONITORING WELL CONSTRUCTION SKETCH

PROJECT NWS–Earle, Site 26 SVE/AS Pilot

CONTRACT NO. US NAVY RAC

DRILLING SUBCONTRACTOR CT&E Drilling

DRILLER

DRILLING METHOD HSA

MONITORING WELL NUMBER FW–5

DATE OF WELL INSTALLATION 4/30/99

DATE OF WELL DEVELOPMENT 5/3/99

GEOLOGIST D. Walsh/C.Joblon

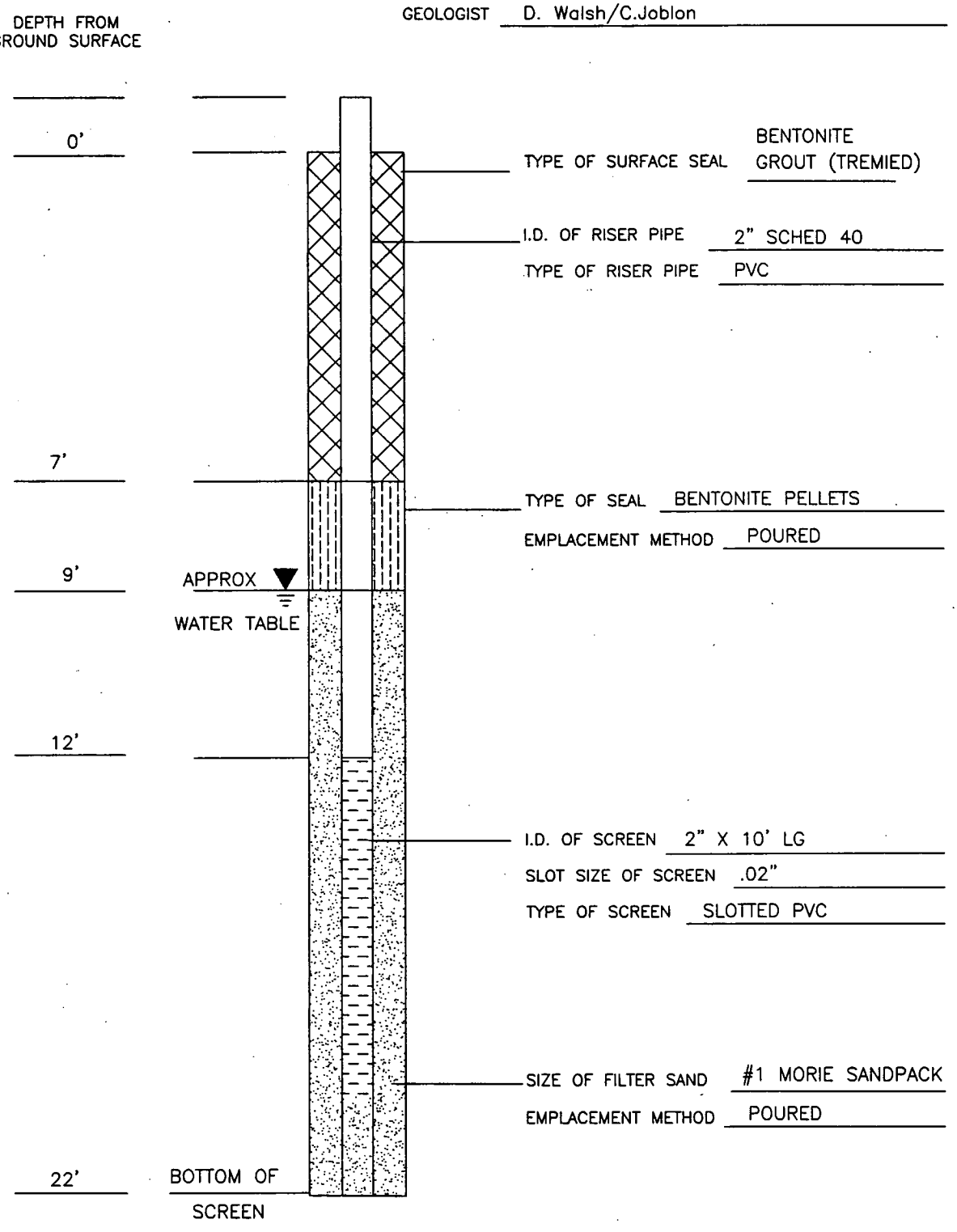

FOSTER WHEELER ENVIRONMENTAL CORPORATION

MONITORING WELL CONSTRUCTION SKETCH

PROJECT NWS–Earle, Site 26 SVE/AS Pilot

CONTRACT NO. US NAVY RAC

DRILLING SUBCONTRACTOR CT&E Drilling

DRILLER

DRILLING METHOD HSA

MONITORING WELL NUMBER FW–6

DATE OF WELL INSTALLATION 4/30/99

DATE OF WELL DEVELOPMENT 5/3/99

GEOLOGIST D. Walsh/C.Joblon

DEPTH FROM GROUND SURFACE

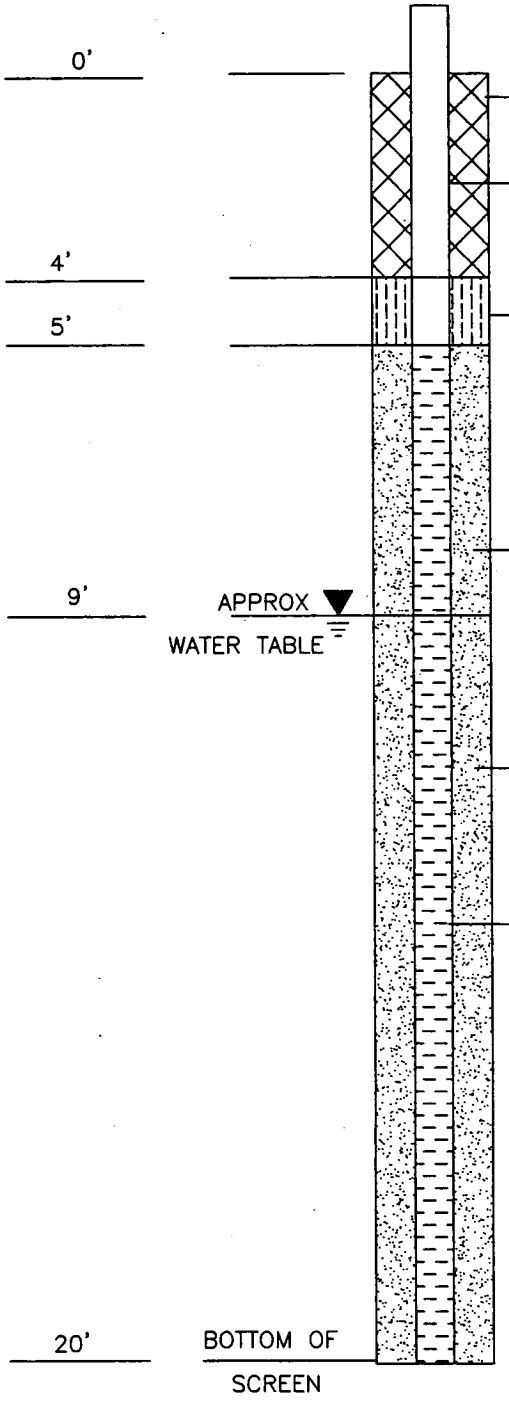

TYPE OF SURFACE SEAL BENTONITE GROUT

I.D. OF RISER PIPE 2" SCHED 40

TYPE OF RISER PIPE PVC

TYPE OF SEAL BENTONITE PELLETS

EMPLACEMENT METHOD POURED

SIZE OF FILTER SAND #2 MORIE SANDPACK

EMPLACEMENT METHOD POURED

SIZE OF FILTER SAND #1 MORIE SANDPACK

EMPLACEMENT METHOD POURED

I.D. OF SCREEN 2" X 15' LG

SLOT SIZE OF SCREEN .02"

TYPE OF SCREEN SLOTTED PVC

FOSTER WHEELER ENVIRONMENTAL CORPORATION

MONITORING WELL CONSTRUCTION SKETCH

PROJECT NWS–Earle, Site 26 SVE/AS Pilot

CONTRACT NO. US NAVY RAC

DRILLING SUBCONTRACTOR CT&E Drilling

DRILLER

DRILLING METHOD HSA

MONITORING WELL NUMBER FW–7

DATE OF WELL INSTALLATION 4/29/99

DATE OF WELL DEVELOPMENT 5/3/99

GEOLOGIST D. Walsh/C.Joblon

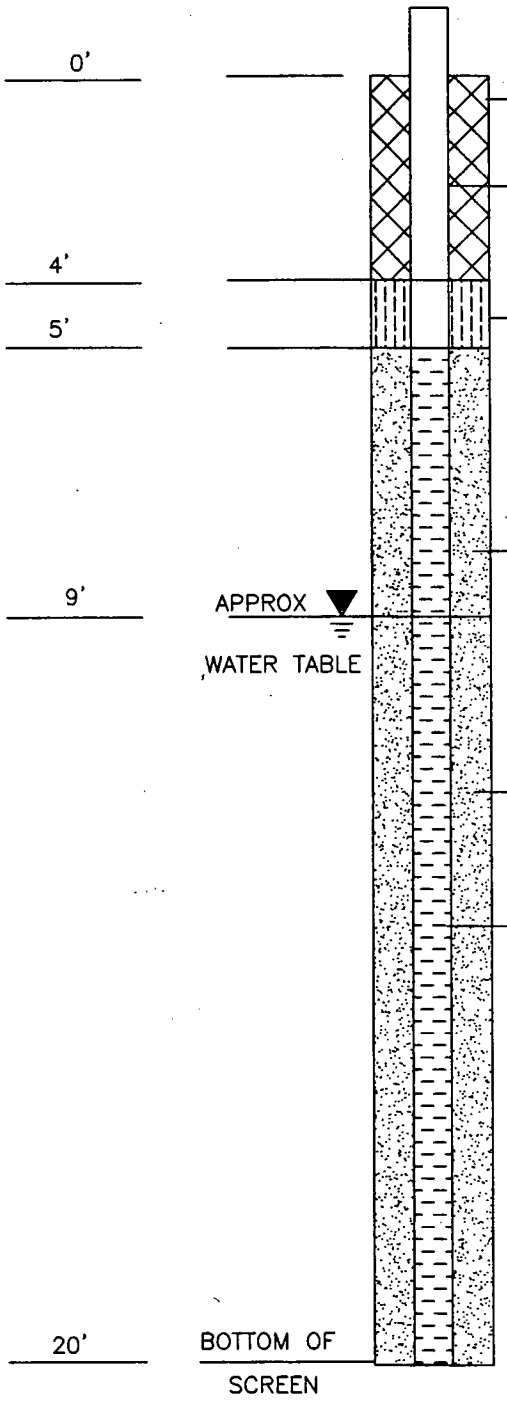

TYPE OF SURFACE SEAL BENTONITE GROUT

I.D. OF RISER PIPE 2" SCHED 40

TYPE OF RISER PIPE PVC

TYPE OF SEAL BENTONITE PELLETS

EMPLACEMENT METHOD POURED

SIZE OF FILTER SAND #2 MORIE SANDPACK

EMPLACEMENT METHOD POURED

SIZE OF FILTER SAND #1 MORIE SANDPACK

EMPLACEMENT METHOD POURED

I.D. OF SCREEN 2" X 15' LG

SLOT SIZE OF SCREEN .02"

TYPE OF SCREEN SLOTTED PVC

FOSTER WHEELER ENVIRONMENTAL CORPORATION

Borehole Log

PROJECT: NWS- Earle, Site 26

BORING NO.: FW-1

PROJECT LOCATION: Colts Neck, NJ

SURFACE ELEVATION:

SUBCONTRACTOR/DRILLER: CT&E

DATE TARTED: 4/28/99

FIELD GEOLOGIST: D. Walsh/C. Joblon

DATE COMPLETED: 4/28/99

DRILLING METHOD: Hollow-stem Auger

REMARKS:

Depth	Blows /6"	Recov-ery	Color	Material Description	USCS Class-ification	Remarks	Profile
0'	7 9 10 14	50%	Yel-brn	0-.7' Unconsol, fine sand with abundant gravel	SW		
			Dk grey	.7-1' A/A less gravel, dry	SP		
2'	17 12 11 12	100%	Grey	2-3' Unc. fine sand A/A	SP		
			Yel-brn	3-4' Fine-med sand A/A	SW	No Odor	
4'	4 12 18 20	90%	Gry-white	4-5.5' A/A with inc. gravel	SP		
			Yel-brn	5.5-5.9' Unc, fine-med sand	SW		
6'	21 15 15 16	100%		6-6.5' C sand & gravel, unc, dry	SW		
				6.5-7.5' F sand, unc, damp-moist	SP	No odor	
				7.5-8' F-C sand, damp	SW		
8'	12 14 15 17	75%		8-8.5' Med-C sand & fine gravel, wet			
				8.5-9' F sand, coarsening with depth	SP		
				9-9.5' F sand w/ mod silt, unc & wet	SM	No odor	

FOSTER WHEELER ENVIRONMENTAL CORPORATION

Borehole Log

PROJECT: NWS– Earle, Site 26

BORING NO.: FW–1

PROJECT LOCATION: Colts Neck, NJ

SURFACE ELEVATION:

SUBCONTRACTOR/DRILLER: CT&E

DATE STARTED: 4/28/99

FIELD GEOLOGIST: D. Walsh/C. Joblon

DATE COMPLETED: 4/28/99

DRILLING METHOD: Hollow–stem Auger

REMARKS:

Depth	Blows /6"	Recov–ery	Color	Material Description	USCS Class–ification	Remarks	Profile
10'	7 10 14 17	75%		10–10.8: A/A 10.8–11.5': F sand, v: unc, wet/saturated	SM–SW SP		
12'		100%	Dk yel–org yel–org & lt gry	12–13' Sat F sand w/mod silt & occ. gravel Gravel more abund. @ 12–813' 13–14' F sand	SW SP		
14'	8 10 16 13	100%	p.yel–org& lt gry	14–14.8': A/A w/ sl incr sand fines 14.8–15':F sand & silt lenses(v. thin) 15–16': Mottled, F sand	SP–SM SM SP		
16'	7 12 18 21	100%	Mostly yel–brn & some lt gry	All F sand, unc, saturated@17.2–17.5' Minor ilt in grey areas	SP		
18'	19 24 34 34	75%	lt grn–gry	18–18.5': F sand w/ 2" gravel zone@ 18.5' 18.5–19.5': F sand, minor fines Laminated w/ numerous heavy mineral streaks Soils are very loose (running sands) Augering is difficult w/ truck–mounted rig	SP SP		

FOSTER WHEELER ENVIRONMENTAL CORPORATION

Borehole Log

PROJECT: NWS– Earle, Site 26

BORING NO.: FW–1

PROJECT LOCATION: Colts Neck, NJ

SURFACE ELEVATION:

SUBCONTRACTOR/DRILLER: CT&E

DATE STARTED: 4/28/99

FIELD GEOLOGIST: D. Walsh/C. Joblon

DATE COMPLETED: 4/28/99

DRILLING METHOD: Hollow–stem Auger

REMARKS:

Depth	Blows /6"	Recov–ery	Color	Material Description	USCS Class–ification	Remarks	Profile
20'	9 12 17 22	75%	All yel–brn	VF–F sand A/A; occ gravel frag			
22'	12 12 7 7	100%	Yel–brn & lt gry–grn yel–org	22–23.8': VF–F sand A/A 23.8–24': VF sand & silt. TD here Will set screen from 5–20' bgs			
24'							

FOSTER WHEELER ENVIRONMENTAL CORPORATION

Borehole Log

PROJECT: NWS– Earle, Site 26

BORING NO.: FW–2

PROJECT LOCATION: Colts Neck, NJ

SURFACE ELEVATION:

SUBCONTRACTOR/DRILLER: CT&E

DATE STARTED: 4/28/99

FIELD GEOLOGIST: D. Walsh/C. Joblon

DATE COMPLETED: 4/28/99

DRILLING METHOD: Hollow–stem Auger

REMARKS: Located 20' SW of GB–1
Augered to 5' bgs before spooning

Depth	Blows /6"	Recov–ery	Color	Material Description	USCS Class–ification	Remarks	Profile
5'	4 7 8 7	75%	yel–brn	5–6.5': F sand, unc & dry occ gravel/pebbles	SP		
7'	7 8 14 17	85%	Buff	7–8': A/A 8–8.7': F–C sand & gravel	SW	Damp	
9'	3 6 10 15	60%	P. yel–org P. yel–org	9–9.6': VF–F sand & silt 9.6–10.2': VF–F sand, little fines	SM SW–SP	Saturated, wet Saturated	
11'	9 7 8 14	75%	P. yel–org & lt gry Yel–org	11–11.3': Med sand w/ few pebbles 11.3–12.2': Fine sand 12.2–12.5': A/A, w/ a few silty clay laminae	SW SP SM–SP	 Saturated	
13'	7 9 12 15	100%	Yel–org & lt gry	13–13.5': A/A 13.5–13.9': M–C sand & gravel 13.9–15': Mottled, F sand	SP SW–GW SP	Saturated No Odor	

FOSTER WHEELER ENVIRONMENTAL CORPORATION
Borehole Log

PROJECT: NWS– Earle, Site 26
BORING NO.: FW–2
PROJECT LOCATION: Colts Neck, NJ
SURFACE ELEVATION:
SUBCONTRACTOR/DRILLER: CT&E
DATE STARTED: 4/29/99
FIELD GEOLOGIST: D. Walsh/C. Joblon
DATE COMPLETED: 4/29/99
DRILLING METHOD: Hollow–stem Auger

REMARKS: Located 20' SW of GB–1
Augered to 5' bgs before spooning

Depth	Blows /6"	Recov–ery	Color	Material Description	USCS Class–ification	Remarks	Profile
15'	7 12 14 22	100%		All mottled, f–med sand w/ occ gravel, no stringers	SP	No Odor	
17'	15 27 31 31	85%		All mottled, F–med sand, w/a 1/4", silty sand @ 18.5	SP		
19'	11 12 17 31	100%	Mostly yel–org	F sand, w/few gray laminae A1" gravel zone @ 20.5'	SP–GW		
21'	25 21 15 17	100%	Olive Olive–Yel–org Dk yel–org	21–22': F sandw/ minor pebbles 22–22.8': F sand (no pebbles) 22.8–23': VF sand & silt	SP SP SM		
23'						Set FW–2 from 5–20'	

FOSTER WHEELER ENVIRONMENTAL CORPORATION

Borehole Log

PROJECT: NWS– Earle, Site 26

BORING NO.: FW–7

PROJECT LOCATION: Colts Neck, NJ

SURFACE ELEVATION:

SUBCONTRACTOR/DRILLER: CT&E

DATE STARTED: 4/29/99

FIELD GEOLOGIST: D. Walsh/C. Joblon

DATE COMPLETED: 4/29/99

DRILLING METHOD: Hollow–stem Auger

REMARKS: AS/SVEM Depth to 22'

Depth	Blows /6"	Recov–ery	Color	Material Description	USCS Class–ification	Remarks	Profile
0'	6 6 5 4	50%	Grey/br Grey/ beige	0–.5' F sand, dry, with trace of gravel .5–1' Laminated, F sand			
2'	4 6 7 7	75%	Or/brn Lt Gry	2–2.5' F–M sand, trace silt, mottled color 2.5–3.5' VF–F sand w/ trace wood chip		Borehole: PID, PPM, (Gl–2%) Core: 1–ppm–pid	
4'	4 6 17 18	75%	OR Or/ Beige Or/ White	4–4.85' VF–F sand w/ trace silt 4.85–5.08' F–C sand w/ some gravel 5.08–5.8' Inter bed, vf–f sand			
6'	19 27 14 17	75%	Or/Dk Brn DR/ Beige Dr/ Beige	6–6.4' F sand, laminated(g), organic materials 6.4–7.2' F–C sand, w/some gravel 7.2–7.5' Lam. f–m sand Core: pid–nab			
8'	17 19 20 20	75%	Or/Dk Brn Or/ Beige	0–4" VF–F sandw/ some silt 4–18" VF–Me, interbed sand Grading to same w/ some gravel			

FOSTER WHEELER ENVIRONMENTAL CORPORATION
Borehole Log

PROJECT: NWS– Earle, Site 26
BORING NO.: FW–7
PROJECT LOCATION: Colts Neck, NJ
SURFACE ELEVATION:
SUBCONTRACTOR/DRILLER: CT&E
DATE STARTED: 4/29/99
FIELD GEOLOGIST: D. Walsh/C. Joblon
DATE COMPLETED: 4/29/99
DRILLING METHOD: Hollow–stem Auger

REMARKS:

Depth	Blows /6"	Recov–ery	Color	Material Description	USCS Class–ification	Remarks	Profile
10'	5 5 9 13	75%	Or/beige Lt gry Or/Lt gry	10–10.6' VF–M, inter bed sand, some gravel 10.6–11' VF–F sand 11–11.08' F sand, laminated, w/ white clay 11.08–11.5' VF–F sand, interbedded		Hole: NAB Core: NAB Wet	
12'	8 8 7 9	80%	Or	12–12.25' F–C sand, gravel, wet 12.25–13' VF–F sand w/ trace silt 13–13.15' F–C sand w/ trace of gravel 13.15–13.6' VF–F sand w/ trace silt		Hole: NAB Core: NAB	
14'	5 5 8 14	85%		14–15.7' VF–F gr sand w/ trace silt, trace gravel, wet		Hole: NAB Core: NAB	
16'	12 15 20 22			16–17.25' VF–F sand sand w/trace, silt, w/ trace gravel, wet 17.25–18' Laminated, VF–F sand w/ trace silt		Hole: NAB Core: NAB	
18'	9 13 16 22	85%	Dk Or	18–19' VF–F sand w/ trace silt & gravel 19–19.7' VF–F sand w/ little silt		Hole: NAB Core: NAB	

FOSTER WHEELER ENVIRONMENTAL CORPORATION

Borehole Log

PROJECT: NWS- Earle, Site 26

BORING NO.: FW-7

PROJECT LOCATION: Colts Neck, NJ

SURFACE ELEVATION:

SUBCONTRACTOR/DRILLER: CT&E

DATE STARTED: 4/29/99

FIELD GEOLOGIST: D. Walsh/C. Joblon

DATE COMPLETED: 4/29/99

DRILLING METHOD: Hollow-stem Auger

REMARKS:

Depth	Blows /6"	Recov-ery	Color	Material Description	USCS Class-ification	Remarks	Profile
20'	7 7 14 10	90%	Dk Brn/Or/ Lt gry	20-23.9' VF-F sand, laminated		Hole: NAB Core: NAB	
22'	17 29 27 24	100%	Dk Brn/Or/ Lt Gry Dk Or	22-23.6' VF-F sand, laminated 23.6-24' VF sand w/ silt		Hole: NAB Core: NAB	
24'						Set FW-7 from 5-20'	

APPENDIX B

SPECS FOR PILOT TEST EQUIPMENT

EN/CP 454
Explosion-Proof Regenerative Blower

FEATURES
- Manufactured in the USA
- Maximum flow: 127 SCFM
- Maximum pressure: 65 IWG
- Maximum vacuum: 59 IWG
- Standard motor: 1.5 HP, explosion-proof
- Cast aluminum blower housing, cover, impeller & manifold; cast iron flanges (threaded); teflon lip seal
- UL & CSA approved motor with permanently sealed ball bearings for explosive gas atmospheres Class I Group D minimum
- Sealed blower assembly
- Quiet operation within OSHA standards

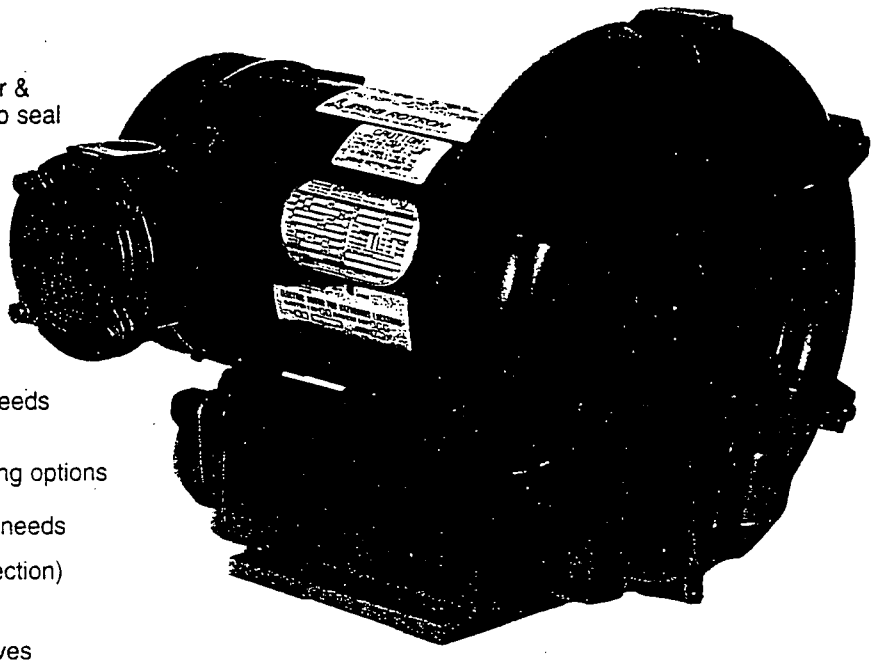

MOTOR OPTIONS
- International voltage & frequency (Hz)
- Chemical duty, high efficiency, inverter duty or industry-specific designs
- Various horsepowers for application-specific needs

BLOWER OPTIONS
- Corrosion resistant surface treatments & sealing options
- Remote drive (motorless) models
- Slip-on or face flanges for application-specific needs

ACCESSORIES (See Catalog Accessory Section)
- Flowmeters reading in SCFM
- Filters & moisture separators
- Pressure gauges, vacuum gauges & relief valves
- Switches – air flow, pressure, vacuum or temperature
- External mufflers for additional silencing
- Air knives (used on blow-off applications)

BLOWER PERFORMANCE AT STANDARD CONDITIONS

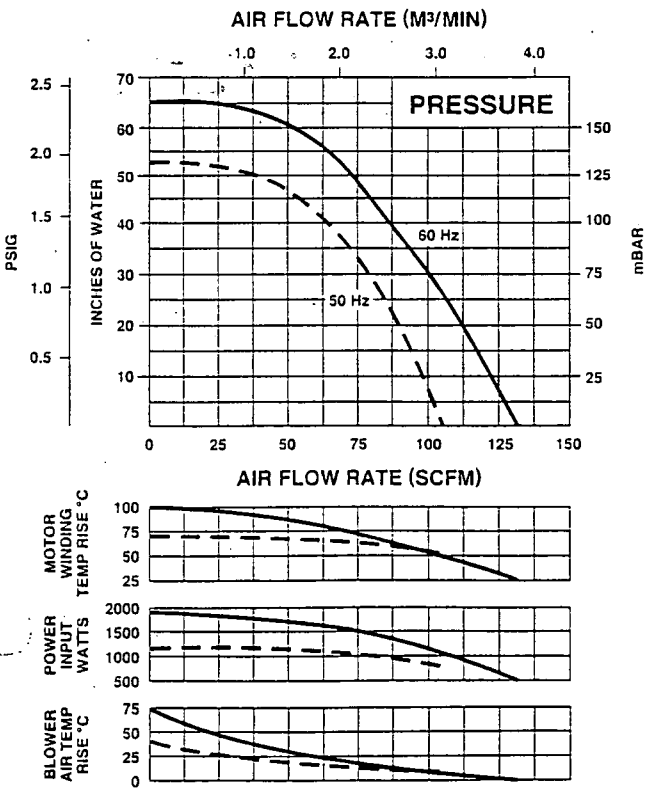

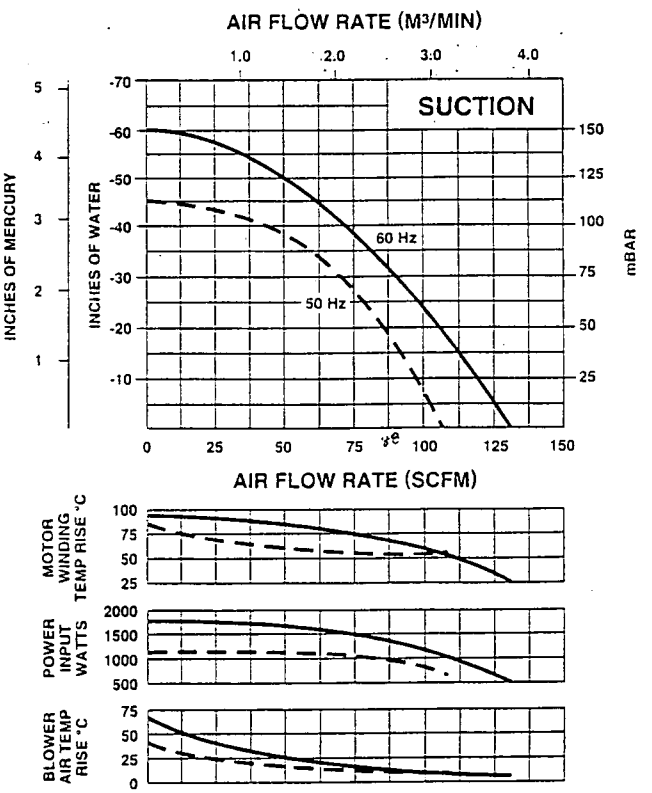

EG&G ROTRON, SAUGERTIES, N.Y. 12477 • 914/246-3401 • FAX 914/246-3802

EN/CP 454
Explosion-Proof Regenerative Blower

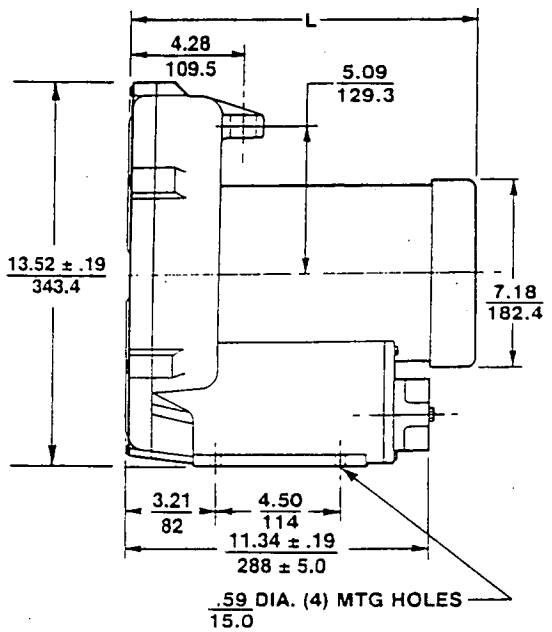

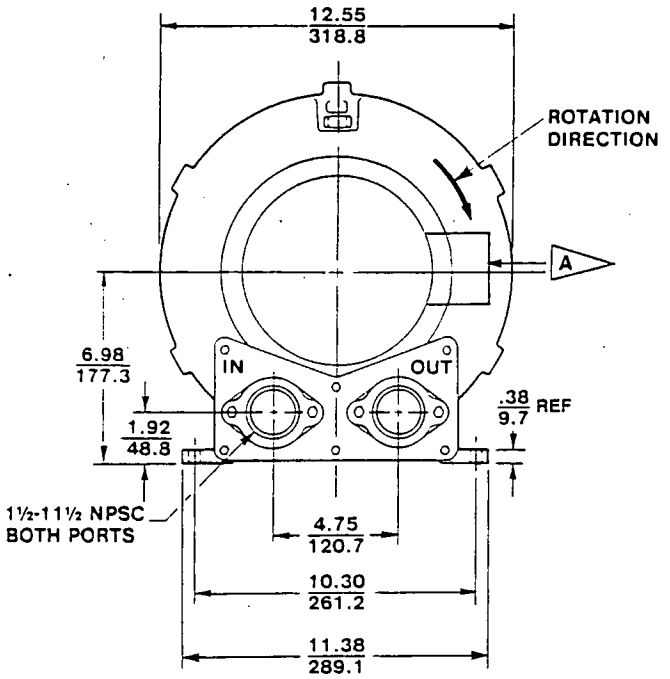

DIMENSIONS: IN / MM
TOLERANCES: .XX ± .06 / 1.5
(UNLESS OTHERWISE NOTED)

MODEL	L (IN) ± .30	L (MM) ± 8
EN/CP454W58L	16.48	419
EN/CP454W72L	15.6	396

A — 0.75" NPT CONDUIT CONNECTION AT 12 O'CLOCK POSITION

SPECIFICATIONS

MODEL	EN454W58L		EN454W72L		CP454FR58LR	CP454FR72LR
Part No.	038175		038176		–	038960
Motor Enclosure – Shaft Material	Explosion-proof – **CS**		Explosion-proof – **CS**		Chem XP – **SS**	Chem XP – **SS**
Horsepower	1.5		1.5		Same as EN454W58L – 038175 except add Chemical Processing (CP) features from catalog inside front cover	Same as EN454W72L – 038176 except add Chemical Processing (CP) features from catalog inside front cover
Phase – Frequency [1]	Single - 60 Hz		Three - 60 Hz			
Voltage [1]	115	208-230	230	460		
Motor Nameplate Amps	15	7.9-7.5	4.6	2.3		
Max. Blower Amps [3]	19.4	9.7-9.0	4.8	2.4		
Inrush Amps	96	48	32	16		
Starter Size	1	0	00	00		
Service Factor	1.0		1.0			
Thermal Protection [2]	Class B - Pilot Duty		Class B - Pilot Duty			
XP Motor Class – Group	I-D, II-F&G		I-D, II-F&G			
Shipping Weight	84 lb (38 kg)		78 lb (35 kg)			

[1] Rotron motors are designed to handle a broad range of world voltages and power supply variations. Our dual voltage 3 phase motors are factory tested and certified to operate on both: **208-230/415-460 VAC-3 ph-60 Hz** and **200-220/400-440 VAC-3 ph-50 Hz**. Our dual voltage 1 phase motors are factory tested and certified to operate on both: **104-115/208-230 VAC-1 ph-60 Hz** and **100-110/200-220 VAC-1 ph-50 Hz**. All voltages above can handle a ±10% voltage fluctuation. Special wound motors can be ordered for voltages outside our certified range.

[2] Maximum operating temperature: Motor winding temperature (winding rise plus ambient) should not exceed 140°C for Class F rated motors or 120°C for Class B rated motors. Blower outlet air temperature should not exceed 140°C (air temperature rise plus inlet temperature). Performance curve maximum pressure and suction points are based on a 40°C inlet and ambient temperature. Consult factory for inlet or ambient temperatures above 40°C.

[3] Maximum blower amps corresponds to the performance point at which the motor or blower temperature rise with a 40°C inlet and/or ambient temperature reaches the maximum operating temperature.

Specifications subject to change without notice. Please contact factory for specification updates.

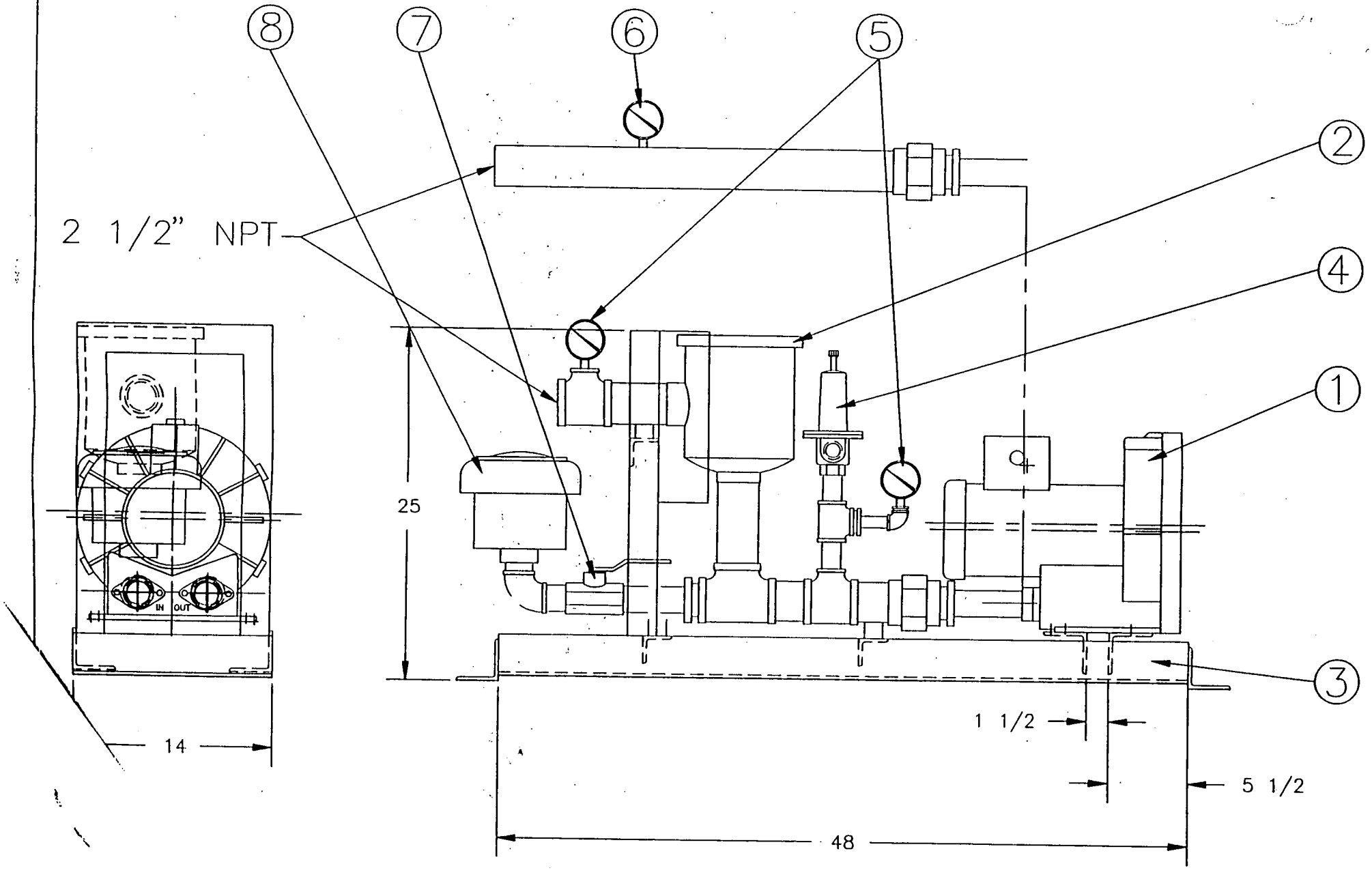

DRAWN BY: DAR	DATE: MAR 97	J.E. Gasho & Assoc., Inc. P.O. BOX 1449 WEST CHESTER, PENNSYLVANIA 19380
APPROVED BY:	DATE:	
DIMENSIONS IN INCHES		
SCALE		EN454 Package
TOLERANCE	ANGULAR TOLERANCE	
MATERIAL	WEIGHT	
SHEET 1 OF 1		RC12 — C — 1113

Service and Parts Manual for Blower Model EN454 - EN606

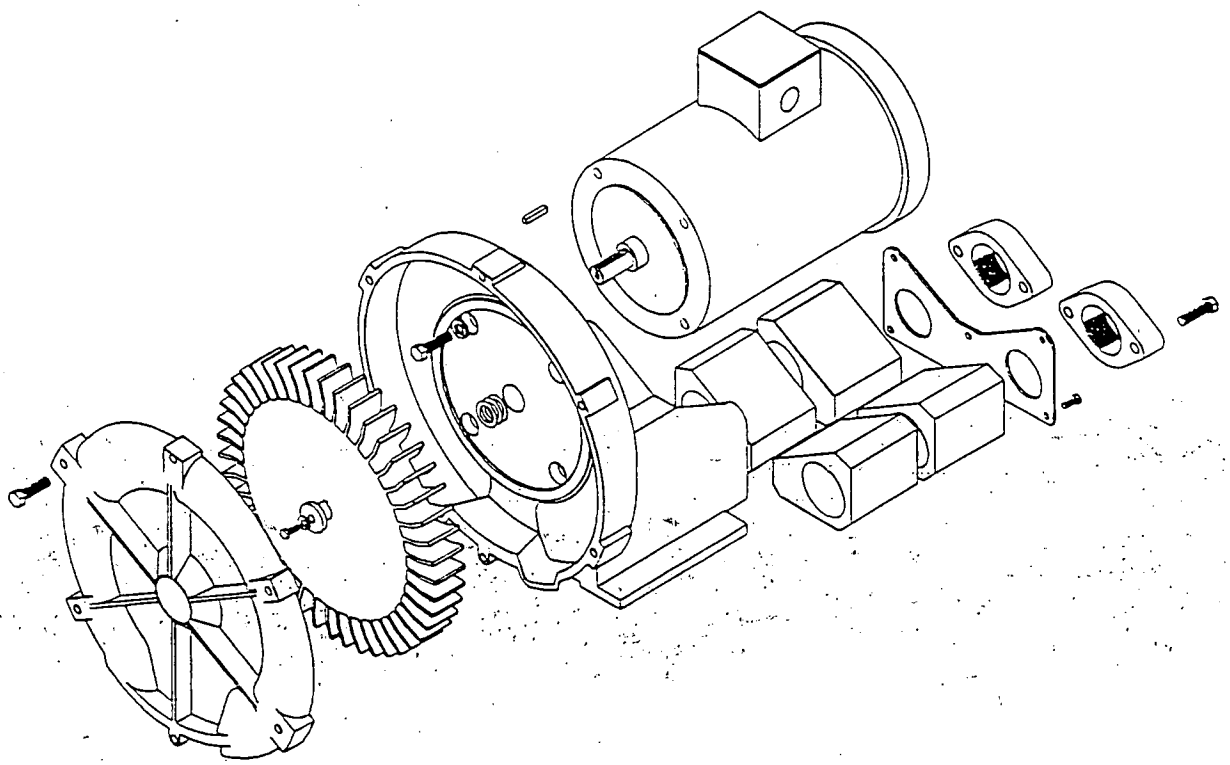

EG&G ROTRON
INDUSTRIAL DIVISION

NORTH STREET
SAUGERTIES, NY 12477
PHONE: (914) 246-3401
FAX: (914) 246-3802

Wiring Diagrams, XP Motors

H. 1ø, 6 wire

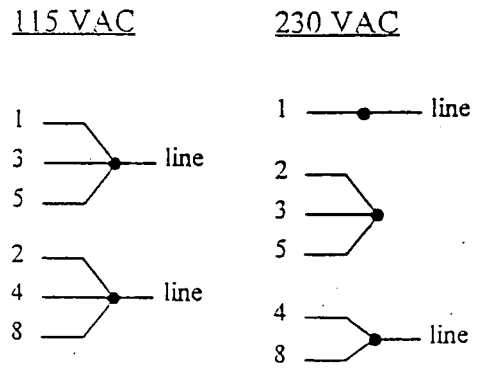

Interchange leadwires 5 & 8 to reverse rotation

I. 1ø, 7 wire

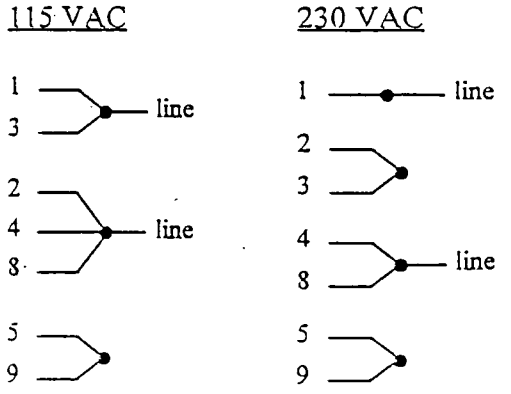

Interchange leadwires 5 & 8 to reverse rotation

K. 3ø, 9 wire

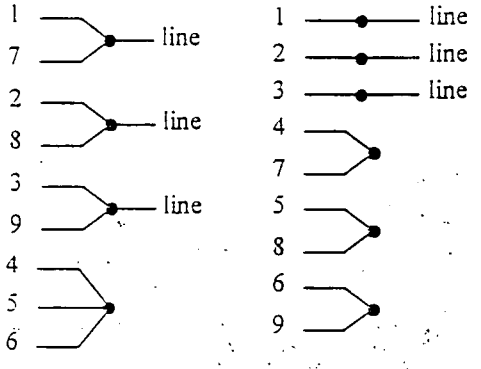

Interchange any two line leads to reverse rotation

L. Pilot Duty Thermal Overload Leads

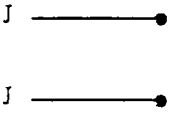

Hook J leads to control circuitry

M. 1ø, 230 VAC

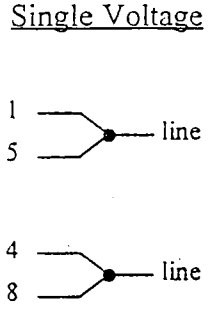

Interchange leadwires 5 & 8 to reverse rotation

N. 3ø, 575 VAC

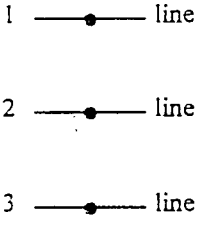

Interchange any two line leads to reverse rotation

NOTE: Wiring diagram on motor takes precedence over those printed here. Wiring diagram typically found under T-box cover.

ASSEMBLY DIAGRAM
DR XOX

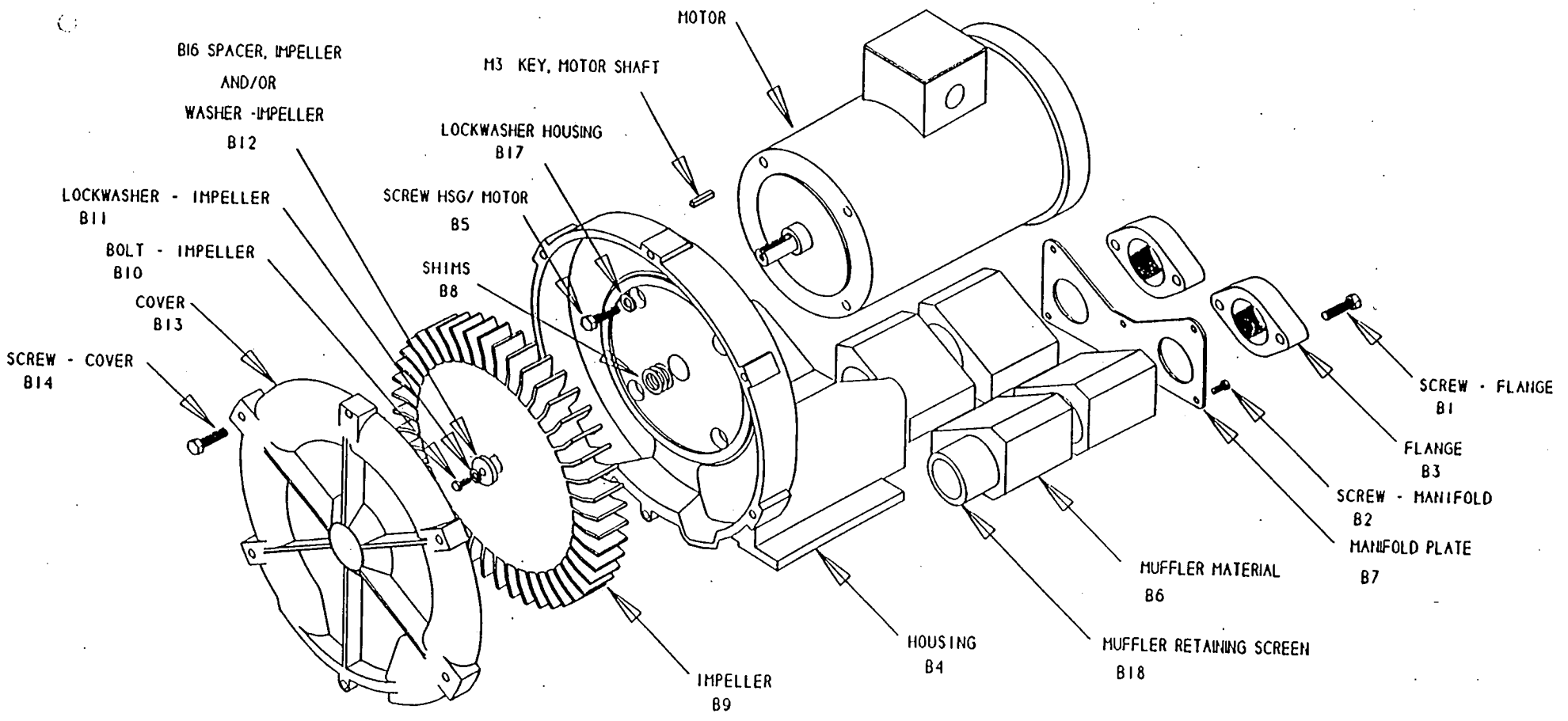

EN 454/513/523/505/555/606
Service and Parts Manual

Parts Breakdown

Item No.	Qty Req'd	Description	EN454	EN513	EN523	EN505	EN555	EN606
		Model:	EN454	EN513	EN523	EN505	EN555	EN606
		Part No.:	038175 038176	038183 038037	038223 038184	038177 038178 038445	038045	038179 038222 038437 038536 038538
M3	1	Key Motor Shaft	510629	510629	155099	510629	510629	510629
B1	4	Screw, Flange	120162	120162	120162	120162	120162	155095
B2	6	Screw, Manifold	120216	(10 pcs) 120214	(10 pcs) 120214	155170	120216	120216
B3	2	Flange	510354	510354	510354	510354	510354	511480
B4	1	Housing	515737	523419	523420	See Next Page	516721	See Next Page
B5	4	Screw, Hsg /Motor	251791	251791	251791	155128	251791	251791
B6	4	Muffler Material	515743	516560	516560	(6 pcs) 515743	515743	See Next Page
B7	1	Manifold Plate	516410	529868	529868	517460	515482	516392
B8	*	Shim .002"	510356	510356	500664	510356	510356	510356
	*	Shim .005"	510357	510357	500665	510357	510357	510357
	*	Shim .010"	510358	510358	500666	510358	510358	510358
	*	Shim .020"	510359	510359	500667	510359	510359	510359
	*	Shim .030"	Not Used	Not Used	510292	Not Used	Not Used	Not Used
B9	1	Impeller	515675	516557	(2 pcs) 516562	517433	516678	511272
B10	1	Bolt, Impeller	120214	120325	120214	120214	120262	120325
B11	1	Lockwasher, Impeller	120203	120203	120203	120203	120203	120203
B12		Washer, Impeller	Not Used	Not Used	Not Used	Not Used	Not Used	Not Used
B13	1	Cover	517807	516559	516559	517808	516675	511274
B14	6	Screw, Cover	120215	(8 pcs) 120255	(8 pcs) 155098	155236	(7 pcs) 120215	120215
B16		Spacer, Impeller Bolt	510355	510355	510355	510355	510355	510355
B17		Lockwasher, Housing	Not Used	Not Used	Not Used	Not Used	Not Used	Not Used
B18		Screen, Muffler Retaining, Right (**)	510362	511718	511718	See Next Page	510362	See Next Page
		Screen, Muffler Retaining, Left (**)	510362	511718	511718	See Next Page	510362	See Next Page
B19		Bolt, Muffler Hsg/Hsg	Not Used	Not Used	Not Used	Not Used	Not Used	Not Used
B20		Muffler Housing	Not Used	Not Used	Not Used	Not Used	Not Used	Not Used
		Bolt, Motor/Muffler	Not Used	Not Used	Not Used	Not Used	Not Used	Not Used
		Lockwasher, Motor/Muffler	Not Used	Not Used	Not Used	Not Used	Not Used	Not Used
		Washer, Motor/Muffler	Not Used	Not Used	Not Used	Not Used	Not Used	Not Used
		Spacer, Motor/Muffler	Not Used	Not Used	Not Used	Not Used	Not Used	Not Used
B23		Bolt, Mounting Rail	Not Used	Not Used	Not Used	Not Used	Not Used	Not Used
B24		Lockwasher, Rail	Not Used	Not Used	Not Used	Not Used	Not Used	Not Used
B25		Nut, Rail	Not Used	Not Used	Not Used	Not Used	Not Used	Not Used
B26		Rail Mounting	Not Used	Not Used	Not Used	Not Used	Not Used	Not Used
		Lip Seal	516587	516587	516587	516587	516587	516587

* As needed ** Viewed looking at inlet/outlet ports *** Not currently in production; superseded by model listed below

Model	Part #	Motor	Wiring Diagram	Specific Parts	Bearing, Rear (M1)	Bearing, Impeller End (M2)
EN454W58L	038175	515747	H + L		510449	510217
EN454W72L	038176	515746	K + L			
EN513W58L	038183	515747	H + L			
EN513W72L	038037	515746	K + L			
EN523M72L	038184	517675	K + L	B13A 516555 1 pc Center Annulus		
EN523M5L	038223	529392	M + L			
EN505AX58ML	038177	510326	H + L	B4 517419 B18 517435 2 pcs		
EN505AX72ML	038178	510325	K + L			
EN505CJ5ML	038445	529622	M + L	B4 529654 B18 517436 2 pcs		
EN555M72L	038045	516687	K + L			
EN606M72L	038179 ***	516687	K + L	B4 511276 1 pc B6 511285 4 pcs		
EN606M5L	038222 ***	529373	M + L			
EN606M86L	038437	529630	N + L	B4 529790 1 pc B6 529781 4 pcs B18 529782 2 pcs		
EN606M72ML	038536	516687	K + L			
EN606M5ML	038538	529373	M + L			

* As needed ** Viewed looking at inlet/outlet ports *** Not currently in production; superseded by model listed below

Warranty Information

1. **No-Fault Policy.** EG&G Rotron regenerative direct drive blowers are guaranteed up to one full year from the date of purchase to the original purchaser only. Should the blower fail, **regardless of the cause of failure,** we will at our option repair or replace the blower.

2. **Standard Policy.** EG&G Rotron remote drives, Nasty Gas™ models and special built (EO) products are guaranteed up to one full year from date of purchase for workmanship and material defect to the original purchaser only. Should the blower fail, we will evaluate the failure. If determined to be workmanship or material defect, we will at our option repair or replace the blower.

3. **Modified Policy.** EG&G Rotron packaged units, Vacu-Master models and moisture separators are guaranteed up to one full year from date of purchase for workmanship and material defect to the original purchaser only on all parts excluding maintenance/wear items such as belts and bags. Should the blower fail, we will evaluate the failure. If determined to be workmanship or material defect, we will at our option repair or replace the blower.

4. **Parts Policy.** EG&G Rotron spare parts and accessories are guaranteed up to three months from date of purchase for workmanship and material defect to the original purchaser only. Should the part fail, we will at our option repair or replace the part.

Corrective Action. A written report will be provided indicating reason(s) for failure, with suggestions for corrective action. If the failure is determined to be a defect in material or workmanship, Rotron will institute a corrective action. Subsequent customer failures due to abuse, misuse, misapplication or repeat offense will not be covered. EG&G Rotron will then notify you of your options. Any failed unit that is tampered with by attempting repair or diagnosis will void the warranty, unless authorized by the factory.

Terms and Conditions. Our warranty covers repairs or replacement of regenerative blowers only, and will not cover labor for installation, shipping costs, accessories or other items not considered integral blower parts. Charges may be incurred on products returned for reasons other than failures covered by their appropriate warranty. Maximum liability will in no case exceed the value of the product purchased. Other terms and conditions of sale are stated on the back of the order acknowledgment.

Installation

1. **Bolt It Down.** Any blower must be secured against movement prior to starting or testing to prevent injury or damage. The blower does not vibrate much more than a standard electric motor.

2. **Filtration.** All blowers should be filtered prior to starting. Care must be taken so that no foreign material enters the blower. If foreign material does enter the blower, it could cause internal damage or may exit at extremely high velocity.

   Should excessive amounts of material pass through the blower, it is suggested that the cover(s) and impeller(s) be removed periodically and cleaned to avoid impeller imbalance. Impeller imbalance greatly speeds bearing wear, thus reducing blower life. Disassembling the blower will void warranty, so contact the factory for cleaning authorization.

3. **Support the Piping.** The blower flanges and nozzles are designed as connection points only and are not designed to be support members.

   Caution: Plastic piping should not be used on blowers larger than 1 HP that are operating near their maximum pressure or suction point. Blower housing and nearby piping temperatures can exceed 200° Fahrenheit. <u>Access by personnel to the housing or nearby piping should be limited, guarded, or marked, to prevent danger of burns</u>.

4. **Wiring.** Blowers must be wired and protected/fused in accordance with local and national electrical codes. All blowers must be grounded to prevent electrical shock. Slo-Blo or time delay fuses should be used to bypass the first second of start-up amperage.

5. **Pressure/Suction Maximums.** The maximum pressure and/or suction listed on the model label should not be exceeded. This can be monitored by means of a pressure or suction gage (available from Rotron), installed in the piping at the blower outlet or inlet. Also, if problems do arise, the Rotron Application Engineering staff will need to know the operating pressure/suction to properly diagnose the problem.

6. **Excess Air.** Bleed excess air off. DO NOT throttle to reduce flow. When bleeding off excess air, the blower draws less power and runs cooler.

   Note: Remote Drive (Motorless) Blowers - Properly designed and installed guards should be used on all belts, pulleys, couplings, etc. Observe maximum remote drive speed allowable. Due to the range of uses, drive guards are the responsibility of the customer or user. Belts should be tensioned using belt gauge.

Maintenance Procedure

When properly piped, filtered, and applied, little or no routine maintenance is required. Keep the filter clean. Also, all models in the DR, EN, CP, and HiE series have sealed bearings which require no maintenance. Bearings should be changed after 15,000 to 20,000 hours, on average. Shell Dolium R grease is used at the factory. Replacement bearings should contain Shell Dolium R or its equivalent.

Troubleshooting

		POSSIBLE CAUSE	OUT OF WARRANTY REMEDY ***
IMPELLER DOES NOT TURN	Humming Sound	1. * One phase of power line not connected 2. * One phase of stator winding open 3. Bearings defective 4. Impeller jammed by foreign material 5. Impeller jammed against housing or cover 6. ** Capacitor open	1. Connect 2. Rewind or buy new motor 3. Change bearings 4. Clean and add filter 5. Adjust 6. Change capacitor
	No Sound	1. * Two phases of power line not connected 2. * Two phases of stator winding open	1. Connect 2. Rewind or buy new motor
IMPELLER TURNS	Blown Fuse	1. Insufficient fuse capacity 2. Short circuit	1. Use time delay fuse of proper rating 2. Repair
	Motor Overheated Or Protector Trips	1. High or low voltage 2. * Operating in single phase condition 3. Bearings defective 4. Impeller rubbing against housing or cover 5. Impeller or air passage clogged by foreign material 6. Unit operating beyond performance range 7. Capacitor shorted 8. * One phase of stator winding short circuited	1. Check input voltage 2. Check connections 3. Change bearings 4. Adjust 5. Clean and add filter 6. Reduce system pressure/vacuum 7. Change capacitor 8. Rewind or buy new motor
	Abnormal Sound	1. Impeller rubbing against housing or cover 2. Impeller or air passages clogged by foreign material 3. Bearings defective	1. Adjust 2. Clean and add filter 3. Change bearings
	Performance Below Standard	1. Leak in piping 2. Piping and air passages clogged 3. Impeller rotation reversed 4. Leak in blower 5. Low voltage	1. Tighten 2. Clean 3. Check wiring 4. Tighten cover, flange 5. Check input voltage

* 3 phase units
** 1 phase units
*** Disassembly and repair of new blowers or motors will void the Rotron warranty. Factory should be contacted prior to any attempt to field repair an in-warranty unit.

Blower Disassembly

Refer to assembly diagram (Appendix 2) for referenced part designations. **CAUTION: Be sure power is disconnected before doing any work on units.**

1. Disconnect power leads.
2. Remove or separate piping and/or mufflers from unit.
3. Remove cover bolts (13) and then cover (12).
4. Remove impeller bolt (18) and washers and then remove impeller. **Note:** Never pry on the edges of the impeller. Use puller, if necessary.
5. Carefully note number and location of shims (14). Remove and set aside. **Note:** If disassembly was for inspection or cleaning purposes, unit may now be reassembled by reversing the above steps. If shaft or impeller replacement is required, the same shims may not be re-used. It will be necessary to re-shim according to the procedure shown under Assembly.
6. Remove housing bolts (20) and remove arbor/housing (11).
7. Arbor disassembly:
   a. Slide the bearing retaining sleeve off the shaft at the blower end.
   b. Remove the four (4) screws and the bearing retaining plate from the blower end.
   c. Lift the shaft assembly far enough out of the arbor to allow removal of the blower end snap ring.
   d. Remove the shaft assembly from the arbor.
   e. If necessary, remove the shaft dust seal from the pulley end of the arbor.

*Muffler Material Replacement**

1. Remove manifold cover bolts (2) and manifold plate (4).
2. Muffler assembly can now be removed and replaced if necessary. On larger blowers with fiberglass acoustical material, wrap the tubular retaining screens with fiberglass matting before sliding the pads over the screens.
3. Reassemble by reversing procedure.

Bearing Selection

All bearings used in EG&G Rotron blowers are of the double sealed variety. In addition, high temperature greases are used to prevent loss of lubrication under severe operating conditions. Select the appropriate bearings by referencing the parts list if ordering from EG&G Rotron, or the parts list and the accompanying chart.

BEARING TYPES AND LUBRICANTS

All Rotron regenerative blowers supplied with direct fitted motors are designed with ABEC1 quality double sealed ball bearings in the motor. The bearing design in all cases is a C3 fit. Below is our recommended chart by bearing part number.

Part No.	Size	Seal Material	Grease	Heat Stabilized
510217 510218 510219	205 206 207	Polyacrylic	Nye Rheotemp 500 30% ± 5% fill	Yes - 325°F
510449 516440 516648	203 202 307	(Buna N)	Shell Dolium "R" 25-40% fill	No
516840 516841 516842 516843 516844 516845 516846 516847	206 207 208 210 309 310 311 313	(Buna N)	Shell Dolium "R" 30% ± 5% fill	No

Blower Reassembly

1. Place assembled arbor assembly against rear of housing (11) and fasten with bolts (20).
2. To ensure impeller is centered within housing cavity, reshim impeller according to the procedure outlined below.
3. Place impeller onto shaft (be sure key is in place) and fasten with bolt (18) and spacer (16) if applicable. TORQUE impeller bolt per table below. Once fastened, carefully spin impeller to be sure it turns freely.
4. Replace cover and fasten with bolts (13).

Bolt Size	Torque
1/4 - 20	6.25 +/- .25
5/16 - 18	11.50 +/- .25
3/8 - 16	20.0 +/- .5
1/2 - 13	49.0 +/- 1
5/8 - 11	90.0 +/- 2

Impeller Shimming Procedure

Tools needed: Machinist's Parallel Bar
Vernier Caliper with depth measuring capability
Feeler Gauges or Depth Gauge

Measure the following:

- Distance from the flange face to the housing (A)
- Distance from the flange face to the motor shaft shoulder (B)
- Impeller thickness (C)

Measurements (A) and (B) are made by laying the parallel bar across the housing flange face and measuring to the proper points. Each measurement should be made at three points, and the average of the readings used.

$$\text{Shim Thickness} = B - \left(\frac{A+C}{2}\right)$$

After impeller installation (step 3 above), the impeller/cover clearance can be checked with feeler gauges, laying the parallel bar across the housing flange face. This clearance should nominally be $\left(\frac{A-C}{2}\right)$.

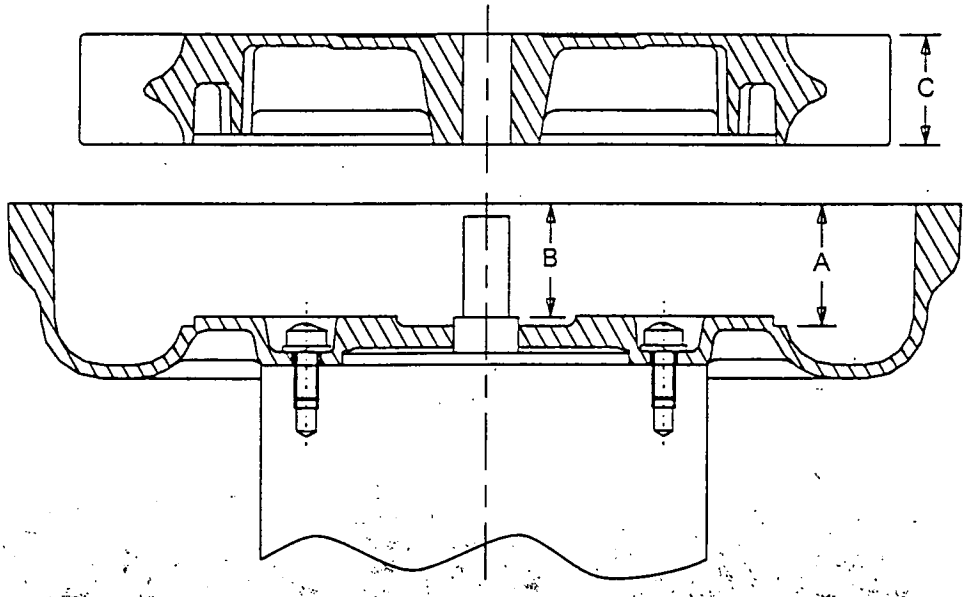

SM[illegible]DEL NUMBERS - CSL Series		EFFECTIVE SURFACE AREA OF ELEMENT IN SQUARE FEET		[illegible]NNECTION		Flow CFM	Approx. Shipping Wt. Lbs.	DIMENSIONS					
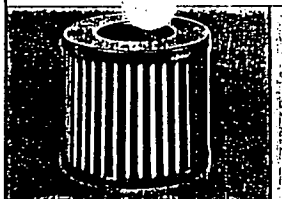 W/Polyester Element	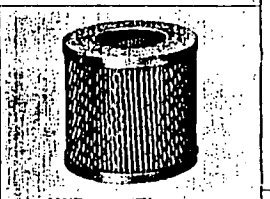 W/Paper Element	Polyester	Paper	Size	Type			A	B	C	D	E	F
THREADED CONNECTIONS													
CSL-04-025	CSL-04-025	.2	.2	1/4"	MPT	6	.5	2-11/16"	*5/8"	2-1/2"	2-1/4"	*5/8"	—
CSL-04-038	CSL-04-038	.2	.2	3/8"	MPT	6	.5	2-11/16"	*5/8"	2-1/2"	2-1/4"	*5/8"	—
CSL-06-038	CSL-06-038	.58	.58	3/8"	MPT	8	1	3-15/16"	*5/8"	3-1/4"	2-15/16"	*5/8"	—
CSL-06-050	CSL-06-050	.58	.58	1/2"	MPT	10	1	4-1/4"	15/16"	3-1/4"	3-1/4"	15/16"	—
CSL-842-050HC	CSL-842-050HC	.6	1.75	1/2"	FPT	10	3	4-3/8"	3/8"	5-7/8"	2-5/8"	9/16"	5"
CSL-842-075HC	CSL-842-075HC	.6	1.75	3/4"	FPT	20	3	4-3/8"	3/8"	5-7/8"	2-5/8"	9/16"	5"
CSL-842-100HC	CSL-842-100HC	.6	1.75	1"	FPT	25	3	4-3/8"	5/8"	5-7/8"	2-5/8"	3/4"	5"
CSL-848-100HC	CSL-848-100HC	2.0	4.5	1"	FPT	40	5	6-1/2"	3/4"	7-5/16"	4-1/2"	3/4"	6-13/16"
CSL-842-125HC	CSL-842-125HC	.6	1.75	1-1/4"	FPT	45	3	4-3/8"	5/8"	5-7/8"	2-5/8"	3/4"	5"
CSL-848-125HC	CSL-848-125HC	2.0	4.5	1-1/4"	FPT	60	5	6-1/2"	3/4"	7-5/16"	4-1/2"	3/4"	6-13/16"
CSL-848-150HC	CSL-848-150HC	2.0	4.5	1-1/2"	FPT	80	5	6-1/2"	3/4"	7-5/16"	4-1/2"	3/4"	6-13/16"
CSL-850-200HC	CSL-850-200HC	4.5	13.75	2"	FPT	150	15	10-1/4"	3/4"	8-3/4"	5"	3/4"	7-5/8"
CSL-850-250HC	CSL-850-250HC	4.5	13.75	2-1/2"	FPT	195	15	10-1/2"	1"	8-3/4"	5-1/2"	1-1/4"	7-5/8"
CSL-234P-300	CSL-234P-300	8.3	22.8	3"	MPT	300	47	27-1/8"	3"	14"	18-1/2"	3"	13"
CSL-334P-300	CSL-334P-300	12.0	34.0	3"	MPT	300	50	27-1/8"	3"	14"	18-1/2"	3"	13"
CSL-234P-400	CSL-234P-400	8.3	22.8	4"	MPT	520	52	27-1/8"	3"	14"	18-1/2"	3"	13"
CSL-334P-400	CSL-334P-400	12.0	34.0	4"	MPT	520	55	27-1/8"	3"	14"	18-1/2"	3"	13"
CSL-244P-500	CSL-244P-500	14.0	35.5	5"	MPT	800	82	28-1/8"	3"	18-1/2"	19-1/2"	3"	17"
CSL-344P-500	CSL-344P-500	22.1	57.0	5"	MPT	800	88	28-1/2"	3"	18-1/2"	19-1/2"	3"	17"
CSL-274P-600	CSL-274P-600	19.0	45.4	6"	MPT	1100	95	28-1/8"	4"	18-1/2"	20-1/2"	4"	17"
CSL-374P-600	CSL-374P-600	28.0	68.1	6"	MPT	1100	97	28-1/8"	4"	18-1/2"	20-1/2"	4"	17"
FLANGED CONNECTIONS													
CSL-234P-400F	CSL-234P-400F	8.3	22.8	4"	FLG	520	62	27-1/8"	3"	14"	18-1/2"	3"	13"
CSL-334P-400F	CSL-334P-400F	12.0	34.0	4"	FLG	520	64	27-1/8"	3"	14"	18-1/2"	3"	13"
CSL-244P-500F	CSL-244P-500F	14.0	35.5	5"	FLG	800	90	28-1/8"	3"	18-1/2"	19-1/2"	3"	17"
CSL-344P-500F	CSL-344P-500F	22.1	57.0	5"	FLG	800	88	28-1/2"	3"	18-1/2"	19-1/2"	3"	17"
CSL-274P-600F	CSL-274P-600F	19.0	45.4	6"	FLG	1100	110	28-1/8"	4"	18-1/2"	20-1/2"	4"	17"
CSL-374P-600F	CSL-374P-600F	28.0	68.1	6"	FLG	1100	113	28-1/8"	4"	18-1/2"	20-1/2"	4"	17"
CSL-376P-800F	CSL-376P-800F	50.0	125.0	8"	FLG	1800	185	38"	4"	22-1/2"	25-1/2"	4"	21"
CSL-384P(2)-1000F	CSL-384P(2)-1000F	100.0	280.0	10"	FLG	2900	380	57-1/2"	4"	26-13/32"	45"	4"	25"
CSL-384P(2)-1200F	CSL-384P(2)-1200F	100.0	280.0	12"	FLG	3300	390	57-1/2"	4"	26-13/32"	45"	4"	25"
CSL-484P(2)-1200F	CSL-484P(2)-1200F	150.0	400.0	12"	FLG	4950	465	70"	4"	26-13/32"	57"	4"	25"

*Currently 15/16" soon to be 5/8"

Gauges

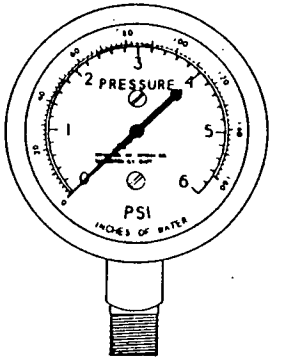

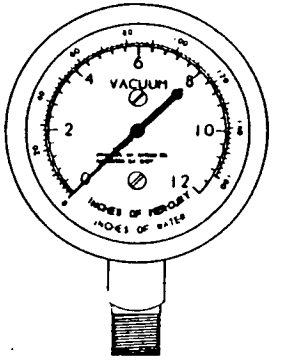

These gauges are reliable and rugged.

SPECIFICATIONS:

Pressure/Vacuum

CASE — Drawn Steel Finished in Black Enamel
DIAPHRAGM — Bronze
LENS — Clear Plastic
ACCURACY — 2%
WEIGHT — ½ lb.

Temperature

CASE — Steel
LENS — Glass
ACCURACY — 1%
WEIGHT — ¼ lb.

Accessory	Part Number	Range	Reference Blower Model	Connection Inlet	Face
Gauge, Pressure		0-60 IWG (2 PSIG)	ALL	¼" NPT	2¼" Dia.
Gauge, Pressure		0-160 IWG (6 PSIG)	ALL	¼" NPT	2¼" Dia.
Gauge, Vacuum		0-60 IWG (4.5 IHG)	ALL	¼" NPT	2¼" Dia.
Gauge, Vacuum		0-160 IWG (12 IHG)	ALL	¼" NPT	2¼" Dia.

Fisher Controls

Instruction Manual

289 Series Relief Valves

FISHER®

August 1990 *Form 1724*

Introduction

Scope of Manual

This instruction manual provides installation, maintenance, and parts ordering information for the 289 Series relief valves. Instructions for other equipment used with these relief valves can be found in separate instruction manuals.

Description

The 289 Series pressure relief valves (see figure 1) are throttling relief valves used downstream of pressure regulators to protect the downstream system from overpressure. These relief valves can be used for natural gas, air, propane, or other noncorrosive, gas-flow service.

Specifications

Specifications for the 289 Series relief valves are given in table 1.

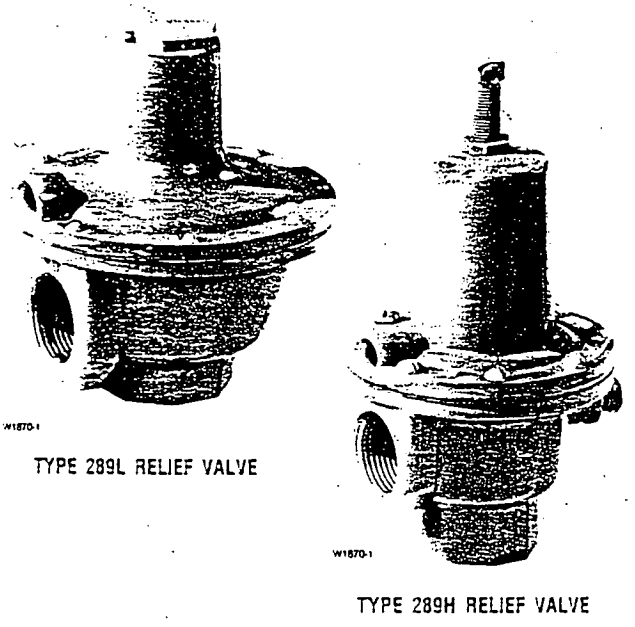

Figure 1. Typical 289 Series Relief Valves

Installation

WARNING

Installing a 289 Series relief valve where its capabilities can be exceeded or where proper operation might be impaired may cause personal injury, property damage, or leakage due to bursting of pressure-containing parts or explosion of accumulated gas. To avoid such conditions, install a 289 Series relief valve where:

- **Service conditions are within the unit capabilities specified in tables 1 and 2, and**
- **The relief valve is protected from exposure to physical damage and/or corrosive substances.**

1. When installing a 289 Series relief valve, make sure that the installation of the system complies with applicable local, state, or federal codes or regulations.

2. Use qualified personnel when installing, operating, and maintaining a 289 Series relief valve. Before installation, make sure there is no damage to or foreign material in the relief valve and that all piping is clean and unobstructed.

3. For installation of Type 289H, 289HH, and 289L relief valves, the vent in the spring case must remain plugged or undrilled in order for the pitot tube to function properly.

D100280X012

©Fisher Controls International Inc. 1979, 1990; All Rights Reserved

Table 1. Specifications

Available Configurations

See table 2

Body Sizes and End Connection Styles

Type 289L: ■ 3/4 or ■ 1 in. NPT screwed
Types 289A and 289U: 1/4 in. NPT screwed
Type 289H: ■ 1 or ■ 2 in. NPT screwed
Type 289HH: 1 in. NPT screwed

Maximum Allowable Relief (Inlet) Pressure and Relief Pressure Set Ranges

See table 2

Material Temperature Capabilities

With Nitrile and Neoprene Elastomers: −20 to 150°F (−29 to 66°C)
With Fluoroelastomer[1]: 20 to 300°F (−7 to 149°C); available with Types 289H and 289HH only

1. Bubble-tight shutoff can not be attained at settings below 5 psig (.34 bar) with fluoroelastomer O-ring seat.

Pressure Setting Adjustment

Adjusting screw

Pressure Registration

Internal

Approximate Weight, LB (kg)

Types 289A and 289U: 0.75 (0.3)
Type 289H:
1 In. Size: 4 (1.8)
2 IN. Size: 1.5 (0.7)
Type 289HH: 4 (1.8)
Type 289L: 1.5 (0.7)

Additional Specifications

For construction materials, see parts list

4. The 289 Series relief valves may be installed in any orientation. However, if installing the relief valve at an outside location, adequate protection, such as raincaps or elbow piping (see figure 2), must be attached to the outlet to keep the relief valve from getting plugged or from collecting moisture, corrosive chemicals, or other foreign materials. If piping is to be attached to the valve outlet, the following parts (if they are connected to the valve outlet as shown in figures 4 through 8) must first be removed: the screen (key 9), the snap ring (key 13), and the gasket (key 15). A typical installation of a 289 Series relief valve is shown in figure 2.

WARNING

If using a 289 Series relief valve on hazardous or flammable gas service, personal injury and property damage could occur due to fire or explosion of vented gas that may have acumulated. To prevent such injury or damage, provide piping or tubing to vent the gas to a safe, well-ventilated area. Also, when venting a hazardous gas, the piping or tubing should be located far enough away from any buildings or windows so to not create a further hazard, and the vent opening should be protected against anything that could clog it.

5. Apply pipe compound to the male pipeline threads only; do not apply pipe compound to the internal body threads. Then install the relief valve so that the flow through it will match the direction arrow or marking cast on the valve body.

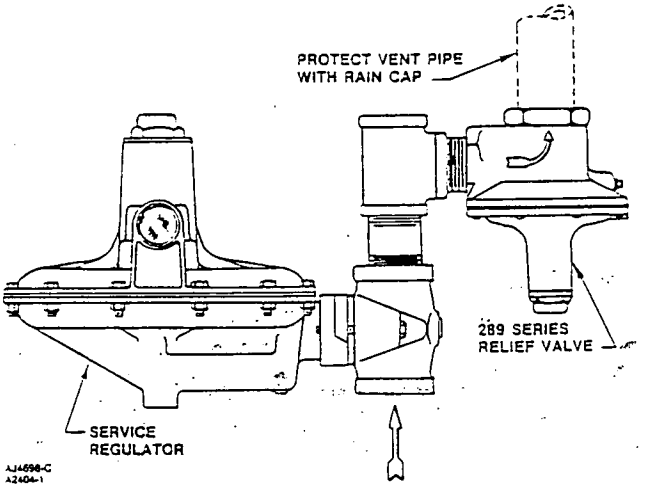

Figure 2. Typical Installation

Startup

Key numbers are shown in figures 4 through 8.

With proper installation completed and system equipment properly adjusted, close any vent valves, and slowly open the upstream shutoff valve while using pressure gauges to monitor pressure.

Note

To ensure proper operation of the pitot tube, if present, the spring case (key 2) must be tightly sealed. It is recommended that the gasket (key 15) be replaced whenever the closing cap (key 14) is removed.

Note

The relief valve body (key 1, figures 4 through 8) may remain in the pipeline during maintenance unless replacement of the valve body is necessary.

WARNING

Avoid personal injury or property damage from sudden release of pressure or explosion of accumulated gas. Before starting disassembly:

- **Isolate the relief valve from line pressure, and**
  Release trapped pressure from the valve body and pressure line.

Type 289A Relief Valves

All key numbers are shown in figure 4.

1. Loosen the hex nut (key 11), and unscrew the adjusting screw (key 6) to relieve spring compression.

2. Unscrew the machine screws (key 8), and remove the spring case (key 2), the spring seat (key 4), the spring (key 7), the diaphragm head (key 3) and the diaphragm (key 5).

3. Inspect the diaphragm and seating surfaces for damage or wear, and replace parts as necessary. To remove the orifice (key 10) unscrew it from the body.

4. Reinstall the orifice, the diaphragm, the diaphragm head, the spring, and the spring seat.

5. Reattach the spring case using the machine screws.

6. If a new spring with a different range is installed, stamp the spring case with the new spring range.

7. Adjust the spring compression according to the procedures outlined in the Startup section.

Type 289U Relief Valves

All key numbers are shown in figure 5.

1. Loosen the hex nut (key 11), and unscrew the adjusting screw (key 6) to relieve spring compression.

2. Unscrew the machine screws (key 8), and remove the spring case (key 2), the spring seat (key 4), the spring (key 7), and the diaphragm assembly (key 5).

3. Inspect the diaphragm assembly and seating surfaces for damage or wear, and replace parts as necessary.

4. Reinstall the diaphragm assembly, the spring, and the spring seat.

5. Reattach the spring case using the machine screws.

6. If a new spring with a different range is installed, stamp the spring case with the new spring range.

7. Adjust the spring compression according to the procedures outlined in the Startup section.

Type 289L Relief Valves

All key numbers are shown in figure 6.

1. Remove the closing cap (key 14) and the gasket (key 15), and then unscrew the adjusting screw (key 6) to relieve spring compression.

2. Unscrew the machine screws (key 8), and then remove the spring case (key 2), the spring (key 7), and the diaphragm assembly (key 5).

3. Inspect the diaphragm and seating surfaces for damage or wear, and replace parts as necessary. To remove the orifice (key 10), unscrew it from the body. Check the pitot tube in the diaphragm assembly for blockage, and remove any foreign material that might impair proper operation of the relief valve.

4. Reinstall the orifice, the diaphragm assembly, and the spring.

5. Reattach the spring case using the machine screws.

6. If a new spring with a different range is installed, stamp the closing cap with the new spring range.

7. Adjust the spring compression according to the procedures outlined in the Startup section, and then reinstall the closing cap and gasket.

Type 289HH and 1-Inch Type 289H Relief Valves

All key numbers are shown in figure 7.

1. Loosen the hex nut (key 11), and then unscrew the adjusting screw (key 6) to relieve spring compression.

2. Unscrew the machine screws (key 8), and remove the spring case (key 2), the spring seat (key 4), and the spring (key 7).

15. Attach the spring case to the valve body using the machine screws (key 8).

16. If a new spring with a different range is installed, stamp the spring case with the new spring range.

17. Adjust the spring compression according to the procedures outlined in the Startup section. Then install the gasket and the closing cap.

Parts Ordering

When corresponding with your Fisher sales office or sales representative about this equipment, always reference the equipment serial number stamped on the spring case (key 2) or the closing cap (key 14). When ordering replacement parts, specify the complete 11-character part number of each required part as found in the following parts list.

Parts List

Key	Description	Part Number
	Parts Kit (included are keys 5, 9, 15, 19, 20, 30 and 38). Screen is stainless steel and gaskets are composition and neoprene.	
	Type 289A (includes only keys 5 and 9)	
	Neoprene diaphragm	R289A X00012
	Type 289L (includes only keys 5, 9, and 15)	
	Nitrile diaphragm and O-rings	
	3/4-inch body	R289L X00012
	1-inch body	R289L X00022
	Type 289H (1-inch body) and 289HH	
	Nitrile diaphragm and O-rings	R289H X00012
	Fluoroelastomer diaphragm and O-rings	R289H X00032
	Type 289H, 2-inch body (includes keys 5, 9, 15, 19, 20 and 38)	
	Nitrile diaphragm and O-rings	R289H X00022
	Fluoroelastomer diaphragm and O-rings	R289H X00042
	Type 289U (includes only keys 5 and 9)	
	Nitrile diaphragm	R289U X00012
1	Valve Body	
	Type 289A, zinc	0Y0710 44022
	Type 289U, zinc	1B0438 44012
	Types 289H (1-inch body) and 289HH, Aluminum	3U8882 08012
	Type 289H (2-inch body), cast iron	31B1992 X012
	Type 289L, aluminum	
	3/4-inch body	3L4070 08012
	1-inch body	3L4069 08012
2	Spring Case/Spring Case Assembly	
	Type 289A, zinc	1A5051 44022
	Types 289H (1-inch body) and 289HH, Aluminum	1P9017 08012
	Type 289H (2-inch body), zinc/steel	1E7020 000A2
	Type 289L, aluminum	3L3338 X0012
	Type 289U, zinc	0B0616 44022
3	Diaphragm Head	
	Type 289A, zinc	0T0227 44022
	Type 289H, plated steel	
	1-inch body	1D6664 28982
	2-inch body	0W0202 25072
	Type 289HH, zinc plated steel	1P9014 25062
4	Spring Seat	
	Type 289A, brass	0T0226 14012
	Type 289U, zinc	1B3725 44022
	Types 289H (1-inch body) and 289HH, Plated steel	1D6671 25072
5*	Diaphragm/Diaphragm Assembly	
	Type 289A, neoprene	1A5052 02102
	Types 289H (1-inch body) and 289HH	
	Nitrile	1E6066 02052
	Fluoroelastomer	1E6066 02342
	Type 289H (2-inch body)	
	Nitrile	1D7800 02052
	Fluoroelastomer	1D7800 02332
	Type 289L	
	Nitrile(1)	
	3/4 & 1-inch body, standard	AL4068 000A2
	Fluoroelastomer(2) (1-inch body)	1N3130 X0012
	Type 289U(3), nitrile	18A281 5X012
6	Adjusting Screw	
	Type 289A, brass	1A5684 14012
	Types 289H (1-inch body) and 289HH, plated steel	1D9954 48702
	Type 289H (2-inch body) zinc	1B5379 44012
	Type 289L, Delrin(4)	T10071 06642
	Type 289U, brass	0F0581 14012
7	Spring	See table 2
8	Machine Screw, plated steel	
	Type 289A (6 req'd)	1B7774 28982
	Types 289H and 289HH, 1-inch body (8 req'd)	1A3917 24052
	Type 289H, 2-inch body (8 req'd)	1A4078 24052
	Type 289L (8 req'd w/o wire seal, 7 req'd w/wire seal)	1B2856 28982
	Type 289L (1 req'd w/wire seal)	1L9277 28982
	Type 289U (6 req'd)	1A3451 28982
9	Screen, Stainless steel	
	Type 289L	
	3/4-inch body	1B6335 38392
	1-inch body	1E5648 43122
	Types 289A and 289U	0L0783 43062
	Types 289H and 289HH, 1-inch body	1E5648 43122
	Type 289H, 2-inch body	11B1994 X012
10	Orifice	
	Type 289A, Aluminum	0T0225 09012
	Type 289H (2-inch body)	
	Brass	1E7026 13012
	Stainless steel	1E7026 35072
	Type 289L	
	Aluminum	1L4064 09012
11	Hex Nut	
	Types 289A and 289U, Brass	1A5054 18992
	Types 289H (1-inch body) and 289HH, Zinc plated steel	1D6677 28982
	Type 289H (2-inch body), Zinc plated steel	D7801 24272
13	Snap Ring	
	Type 289L, Stainless steel	
	3/4-inch body	1B6336 38992
	1-inch body	1E5649 37022

* Recommended spare part.
1. Assembly also includes an aluminum pitot tube and brushing, a zinc plated steel spring seat and diaphragm head, and a neoprene seat pad.
2. Assembly also includes an aluminum pitot tube, bushing, and diaphragm head, a 302 stainless steel spring seat, and a neoprene seat pad.
3. Assembly also includes a zinc diaphragm head.
4. Trademark of E.I. duPont de Nemours Co.

Specifications

Cartridge Type Filters and Filter Sil nc rs

Note:
- All models available with pleated paper, pleated felt or wire mesh elements; specify on order (see pg. 3).
- Sizes 4″ and 5″ available with female pipe threads or flanges; specify on order.

CCS, CS Series Filter Silencers
CCF, CF Series Filters

For use on Blowers, Compressors and Engines

CCS Series, CS Series Filter Silencers

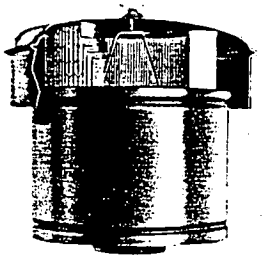

CCS SERIES (With Weatherhood) is illustrated

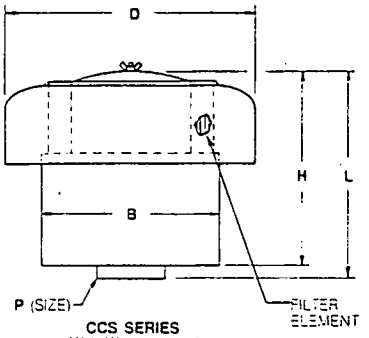

CCS SERIES
(With Weatherhood)

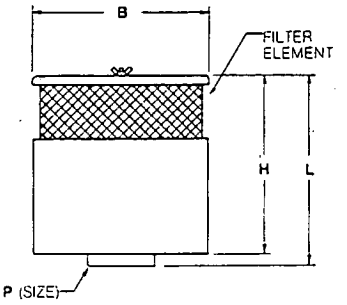

CS SERIES
(No Weatherhood)

CCF Series, CF Series Filters

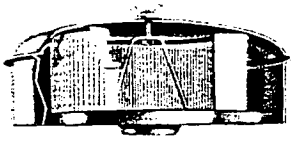

CCF SERIES (With Weatherhood) is illustrated

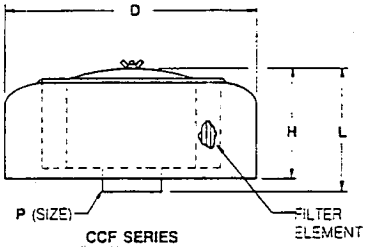

CCF SERIES
(With Weatherhood)

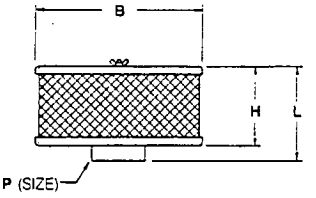

CF SERIES
(No Weatherhood)

P (SIZE)	RATED CAP. (CFM)	D	B	H				L				WEIGHT			
				CF	CCF	CS	CCS	CF	CCF	CS	CCS	CF	CCF	CS	CCS
½	15	7¾	6	Use CS or CCS Series		5¾	6	Use CS or CCS Series		6¼	6½	—	—	6	7
¾	22	7¾	6			5¾	6			6¼	6½	—	—	6	7
1	35	7¾	6			5¾	6			6¼	6½	—	—	6	7
1¼	60	8½	6½	2½	3¾	6¾	7	3½	3¾	7½	8	5	8	7	10
1½	75	8½	6½	2½	3¾	6¾	7	3½	3¾	7½	8	5	8	7	10
2	120	8½	6½	2½	3¾	6¾	7	3½	3¾	7½	8	5	8	7	10
2½	190	12	10	4¼	5	11½	12¼	5¼	5½	11½	12¼	10	15	15	20
3	275	12	10	4¼	5	11½	12¼	5¼	5½	11½	12¼	10	15	15	20
3½	375	12	10	6¼	6¾	14	14¾	7¼	7¾	14	14¾	10	15	15	20
4 (Flg.)	500	12	10	6¼	6¾	14	14½	9½	9¾	17	17½	15	19	21	25
4 (NPT)	500	12	10	6¼	6¾	13¾	14½	7¼	7¾	14	14¾	13	17	19	23
5 (Flg.)	750	16	12	7¼	7½	17¼	17¾	10¼	10½	20¼	20¾	20	27	29	36
5 (NPT)	750	16	12	7¼	7½	17¼	17¾	8¼	8½	17½	18	13	20	22	29
6	1100	18	14	8¾	9½	22½	23¼	12	12½	25½	26¼	25	36	41	52
8	2200	18	14	17½	18	30¾	31½	20	20½	33¼	34	36	52	52	68
10	3000	24	18	10¼	11¼	26¾	27½	14½	15½	30¾	31½	50	60	80	90
12	4300	24	18	10¼	11¼	26¾	27½	14½	15½	30¾	31½	55	70	90	105
14	5900	30	24	14¼	15¾	33¾	35¼	18¼	19½	38¼	39¾	90	110	155	175
16	7700	30	24	14¼	15¾	33¾	35¼	18¼	19½	38¼	39¾	95	115	165	185

Universal's cartridge type filters and filter silencers are ruggedly constructed of carbon steel and finished with a high quality, semi-gloss enamel paint. All models are available with replaceable high-efficiency pleated paper or pleated felt elements or permanent wire mesh elements (see pg. 3). Sizes ½″ thru 3½″ are standard with female thread pipe connections, sizes 6″ – 16″ are standard with pipe flanges. Sizes 4″ and 5″ are optional with female threads or flanges—specify on order. All models are provided with ¼″ NPT tap for installation of gauge or manometer to monitor pressure drop.

Noise Attenuation–CCS Series, CS Series

Octave Band Cent. Freq.—Hz	63	125	250	500	1000	2000	4000	8000
Attenuation—dB	5	8	10	12	14	14	14	14

CCS Series Filter Silencer Features removable weatherhood and integral silencing section (see noise attenuation table below).

CS Series Filter Silencer Same as CCS Series except removable top plate replaces weatherhood.

CCF Series Filter Features removable weatherhood. No silencing section.

CF Series Filter Same as CCF Series except removable top plate replaces weatherhood.

Pressure Drop (Clean) All Models

% of Rated Flow	50	75	100	125	150
Pressure Drop—Inches H_2O	0.7	1.6	2.8	4.4	6.3

Universal Silencer, A Division of Nelson Industries, Inc., Stoughton, WI 53589

BALL VALVE – 2 PIECE

TWO PIECE STANDARD PORT DESIGN
600 WOG/150 SWP ¼" THRU 2"
400 WOG/150 SWP 2½" THRU 3"
REINFORCED PTFE SEATS
LEVER OPERATED

CONFORMS TO:

WW-V-35
TYPE II
STYLE 3
END CONNECTION A

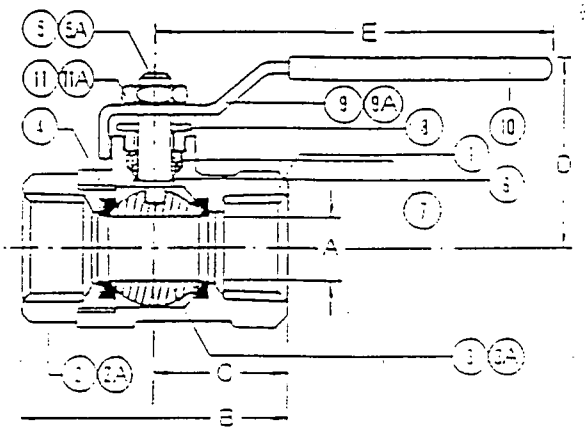

BA100 - Bronze Body, Threaded Ends

BA-100S - SS/SS Trim, Threaded Ends

DIMENSIONS-INCHES

SIZE	¼-¾	½	¾	1	1¼	1½	2	2½	3
A	.38	.50	.69	.89	1.06	1.31	1.55	2.29	2.56
B	1.97	2.19	2.53	3.13	3.50	3.97	4.30	5.56	6.16
C	.98	1.10	1.30	1.59	1.75	1.97	2.15	2.78	3.10
D	1.80	1.38	2.14	2.30	2.71	2.90	3.09	3.89	4.19
E	3.31	3.31	4.62	4.62	6.31	6.31	7.19	7.19	7.19

PRESSURE - TEMPERATURE CHART

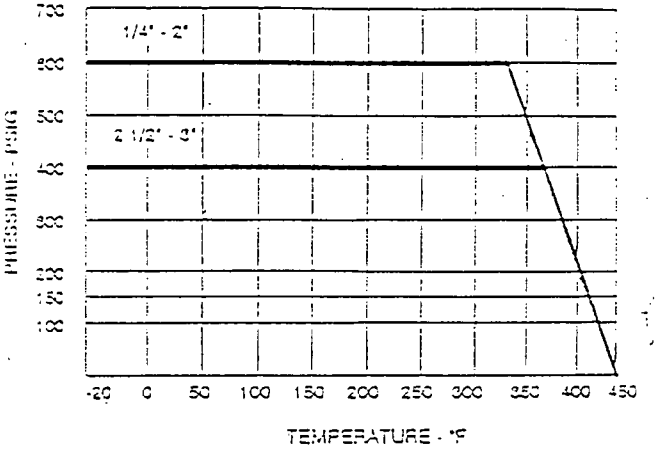

MATERIAL LIST

NO.	SIZE	DESCRIPTION	MATERIAL SPECIFICATION
1	¼-3	Body	Cast Bronze, ASTM-B584
2	¼-¾	Tailpiece (Rod)	Brass Hex Rod, ASTM-B16
2A	1-3	Tailpiece (Cast)	Cast Bronze, ASTM-B584
3	¼-3	Ball (BA-100 Valve)	Brass, ASTM-B16, Hard Chrome Plating
3A	¼-3	Ball (BA-100S Valve)	Stainless Steel, Type 316, ASTM-A276
4	¼-3	Seat	Reinforced PTFE, 15% Glass Filled
5	¼-3	Stem (BA-100 Valve)	Brass Round Rod, ASTM-B16
5A	¼-3	Stem (BA-100S Valve)	St. Steel Round Bar, Type 316, ASTM A276
6	¼-3	Washer	Reinforced PTFE, 25% Glass Filled
7	¼-3	Packing	PTFE
8	¼-3	Packing Nut	Brass Hex Rod, ASTM-B16
9	¼-3	Handle	Steel w/Zinc Coating, ASTM-B633
9A	¼-3	Handle	St. Steel, 2B Finish, ASTM-A167
10	¼-3	Hand Grip	Vinyl
11	¼-3	Handle Nut (BA-100 Valve)	Steel w/Zinc Coating, Chromate Treatment
11A	¼-3	Handle Nut (BA-100S Valve)	Stainless Steel, Type 316

TORQUE RATING & Cv

Valve Size (Inches)	Maximum Breakaway Torque (In Lbs.)	Cv
¼-½	24	6.3
⅝	30	9.3
¾	36	25
1	54	35
1¼	84	47
1½	132	81
2	156	105
2½	250	440
3	320	390

MILWAUKEE VALVE COMPANY

MANUAL STARTING SWITCHES

Manual Starters provide full line voltage starting, thermal overload and under-voltage protection which is needed to meet safety standards.

Under-voltage protection is achieved by the actuation of an electromechanical solenoid which opens the starter contacts immediately upon power failure. Even if the power is returned, the contacts will stay open until the starter switch is manually reset by pushing it to the "stop" position before putting it in the "start" position.

CAUTION: *If your vacuum blower motor is equipped with pilot duty thermal overload protection, failure to properly wire this protection according to the diagram violates UL Standard 674 and NEC 501 and can render the manufacturer's warranty null and void.*

TYPICAL SINGLE PHASE INSTALLATION

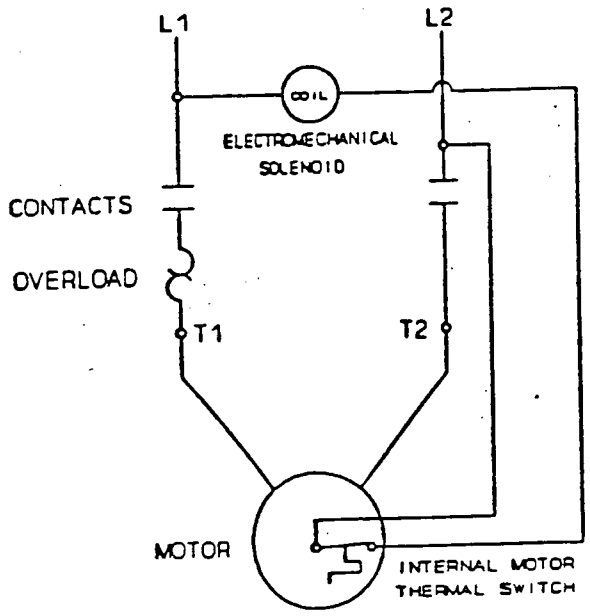

TYPICAL THREE PHASE INSTALLATION

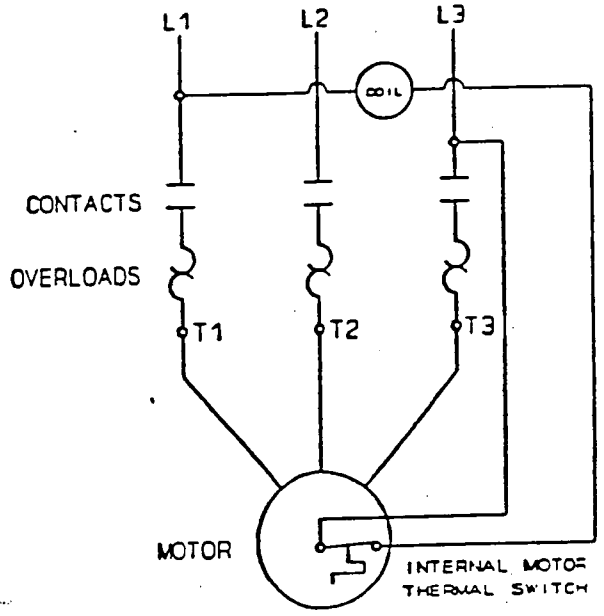

Motor Voltage	Phase	NEMA Size	Max. Hp	Coil Voltage	Part No.
115	1	0	1	120	ESW-ST0004
115	1	1	2	120	ESW-ST0005
230	1	0	2	240	ESW-ST0006
230	3	0	3	240	ESW-ST0007
230	3	1	7 1/2	240	ESW-ST0008
460	3	0	5	480	ESW-ST0009
460	3	1	10	480	ESW-ST0010

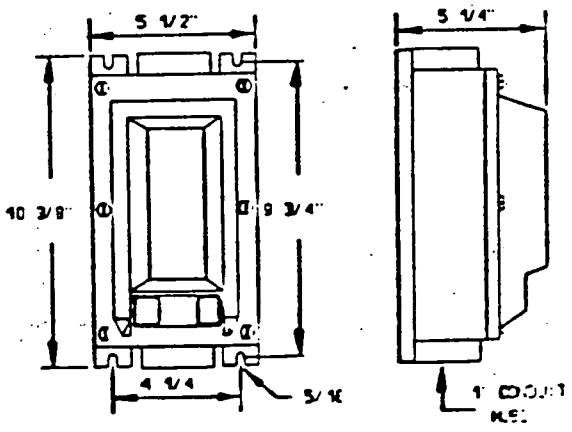

J.E. GASHO & ASSOCIATES, INC.

Authorized Manufacturer's Representatives
Air / Gas Moving Equipment

P.O. BOX 1449, 460 W. GAY STREET
WEST CHESTER, PA 19380
PHONE: (610) 692-5650 FAX: (610) 692-5837

Material List

Item No.	Qty	Description
A	1	Blower : Rotron Rotary Vane Model - PRP230AW58, 2HP, ODP
B	1	Inlet Filter : Solberg, P/N F-09-050 Replacement element #09
C	1	Fisher 1" Vacuum Relief Valve, P/N 289H-41 (10-20 PSIG)
D	1	1/2" Bleed Valve muffler - U5 - 1/2 with 1/2" Milwaukee Ball Valve
E	1	Dwyer Ratemaster Flowmeter, P/N RMC - 121 - BV with flow valve
F	1	Dwyer Minihelic II Differential Pressure Gauge P/N 2 - 5215 with allen wrench for adjustments
G	1	Dyer Fiberglass Enclosure
H	1	Nema Lovato 3R Manual Motor Starter 2 HP, 230 volt, 1 phase
I	1	Base Weldment - 30" x 42"

EG&G ROTRON

PRP195 & PRP230
ROTARY VANE BLOWER

FEATURES

- Manufactured in the USA
- Maximum pressure 15 PSIG
- Maximum flow 19.5/23 SCFM
- Ambient temperature 35°F to 95°F
- 1.5/2.0 HP ODP motor standard
- Motor construction - permanently sealed ball bearings
- Automatic thermal overload protection
- Inlet filter

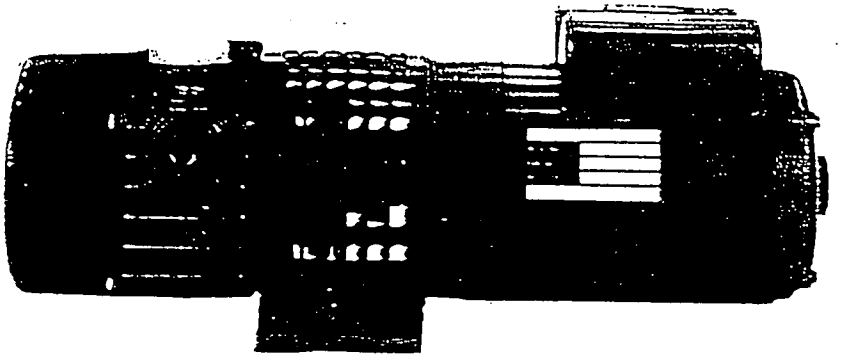

ACCESSORIES

- Pressure/vacuum relief valves
- Pressure/vacuum gauges

OPTIONS

- Remote drive (motorless) models

PERFORMANCE AT SEA LEVEL

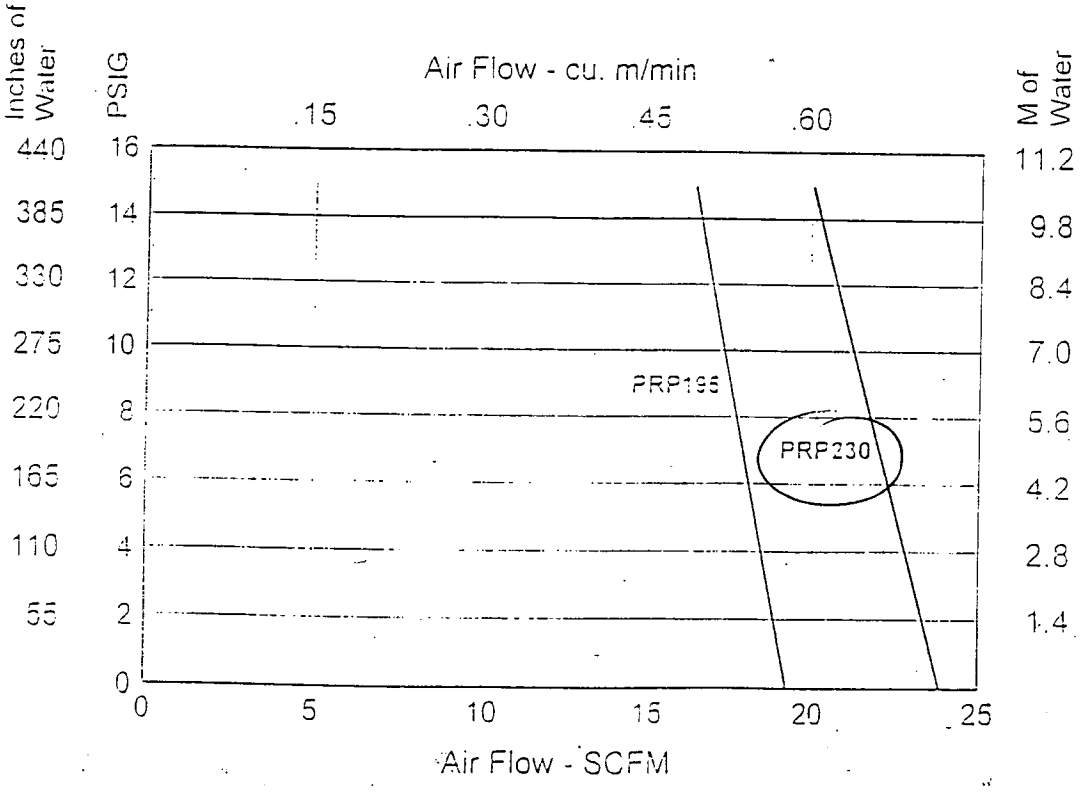

EG&G ROTRON, SAUGERTIES, NY 12477 • 914/246-3401 • FAX 914/246-3802

Table 1. Specifications

Available Configurations

See table 2

Body Sizes and End Connection Styles

Type 289L: ■ 3/4 or ■ 1 in. NPT screwed
Types 289A and 289U: 1/4 in. NPT screwed
Type 289H: ■ 1 or ■ 2 in. NPT screwed
Type 289HH: 1 in. NPT screwed

Maximum Allowable Relief (Inlet) Pressure and Relief Pressure Set Ranges

See table 2

Material Temperature Capabilities

With Nitrile and Neoprene Elastomers: −20 to 150°F (−29 to 66°C)
With Fluoroelastomer[1]: 20 to 300°F (−7 to 149°C); available with Types 289H and 289HH only

1. Bubble-tight shutoff can not be attained at settings below 5 psig (.34 bar) with fluoroelastomer O-ring seat.

Pressure Setting Adjustment

Adjusting screw

Pressure Registration

Internal

Approximate Weight, LB (kg)

Types 289A and 289U: 0.75 (0.3)
Type 289H:
1 In. Size: 4 (1.8)
2 IN. Size: 1.5 (0.7)
Type 289HH: 4 (1.8)
Type 289L: 1.5 (0.7)

Additional Specifications

For construction materials, see parts list

4. The 289 Series relief valves may be installed in any orientation. However, if installing the relief valve at an outside location, adequate protection, such as raincaps or elbow piping (see figure 2), must be attached to the outlet to keep the relief valve from getting plugged or from collecting moisture, corrosive chemicals, or other foreign materials. If piping is to be attached to the valve outlet, the following parts (if they are connected to the valve outlet as shown in figures 4 through 8) must first be removed: the screen (key 9), the snap ring (key 13), and the gasket (key 15). A typical installation of a 289 Series relief valve is shown in figure 2.

WARNING

If using a 289 Series relief valve on hazardous or flammable gas service, personal injury and property damage could occur due to fire or explosion of vented gas that may have acumulated. To prevent such injury or damage, provide piping or tubing to vent the gas to a safe, well-ventilated area. Also, when venting a hazardous gas, the piping or tubing should be located far enough away from any buildings or windows so to not create a further hazard, and the vent opening should be protected against anything that could clog it.

5. Apply pipe compound to the male pipeline threads only; do not apply pipe compound to the internal body threads. Then install the relief valve so that the flow through it will match the direction arrow or marking cast on the valve body.

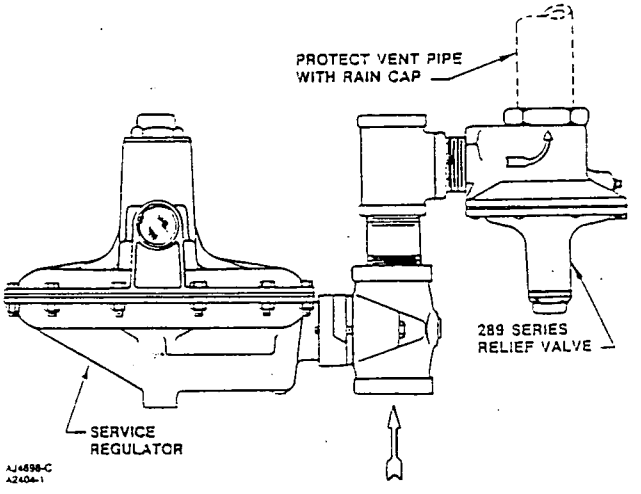

Figure 2. Typical Installation

Startup

Key numbers are shown in figures 4 through 8.

With proper installation completed and system equipment properly adjusted, close any vent valves, and slowly open the upstream shutoff valve while using pressure gauges to monitor pressure.

Note

To ensure proper operation of the pitot tube, if present, the spring case (key 2) must be tightly sealed. It is recommended that the gasket (key 15) be replaced whenever the closing cap (key 14) is removed.

Note

The relief valve body (key 1, figures 4 through 8) may remain in the pipeline during maintenance unless replacement of the valve body is necessary.

WARNING

Avoid personal injury or property damage from sudden release of pressure or explosion of accumulated gas. Before starting disassembly:

Isolate the relief valve from line pressure, and

Release trapped pressure from the valve body and pressure line.

Type 289A Relief Valves

All key numbers are shown in figure 4.

1. Loosen the hex nut (key 11), and unscrew the adjusting screw (key 6) to relieve spring compression.

2. Unscrew the machine screws (key 8), and remove the spring case (key 2), the spring seat (key 4), the spring (key 7), the diaphragm head (key 3) and the diaphragm (key 5).

3. Inspect the diaphragm and seating surfaces for damage or wear, and replace parts as necessary. To remove the orifice (key 10) unscrew it from the body.

4. Reinstall the orifice, the diaphragm, the diaphragm head, the spring, and the spring seat.

5. Reattach the spring case using the machine screws.

6. If a new spring with a different range is installed, stamp the spring case with the new spring range.

7. Adjust the spring compression according to the procedures outlined in the Startup section.

Type 289U Relief Valves

All key numbers are shown in figure 5.

1. Loosen the hex nut (key 11), and unscrew the adjusting screw (key 6) to relieve spring compression.

2. Unscrew the machine screws (key 8), and remove the spring case (key 2), the spring seat (key 4), the spring (key 7), and the diaphragm assembly (key 5).

3. Inspect the diaphragm assembly and seating surfaces for damage or wear, and replace parts as necessary.

4. Reinstall the diaphragm assembly, the spring, and the spring seat.

5. Reattach the spring case using the machine screws.

6. If a new spring with a different range is installed, stamp the spring case with the new spring range.

7. Adjust the spring compression according to the procedures outlined in the Startup section.

Type 289L Relief Valves

All key numbers are shown in figure 6.

1. Remove the closing cap (key 14) and the gasket (key 15), and then unscrew the adjusting screw (key 6) to relieve spring compression.

2. Unscrew the machine screws (key 8), and then remove the spring case (key 2), the spring (key 7), and the diaphragm assembly (key 5).

3. Inspect the diaphragm and seating surfaces for damage or wear, and replace parts as necessary. To remove the orifice (key 10), unscrew it from the body. Check the pitot tube in the diaphragm assembly for blockage, and remove any foreign material that might impair proper operation of the relief valve.

4. Reinstall the orifice, the diaphragm assembly, and the spring.

5. Reattach the spring case using the machine screws.

6. If a new spring with a different range is installed, stamp the closing cap with the new spring range.

7. Adjust the spring compression according to the procedures outlined in the Startup section, and then reinstall the closing cap and gasket.

Type 289HH and 1-Inch Type 289H Relief Valves

All key numbers are shown in figure 7.

1. Loosen the hex nut (key 11), and then unscrew the adjusting screw (key 6) to relieve spring compression.

2. Unscrew the machine screws (key 8), and remove the spring case (key 2), the spring seat (key 4), and the spring (key 7).

15. Attach the spring case to the valve body using the machine screws (key 8).

16. If a new spring with a different range is installed, stamp the spring case with the new spring range.

17. Adjust the spring compression according to the procedures outlined in the Startup section. Then install the gasket and the closing cap.

Parts Ordering

When corresponding with your Fisher sales office or sales representative about this equipment, always reference the equipment serial number stamped on the spring case (key 2) or the closing cap (key 14). When ordering replacement parts, specify the complete 11-character part number of each required part as found in the following parts list.

Parts List

Key	Description	Part Number
	Parts Kit (included are keys 5, 9, 15, 19, 20, 30 and 38). Screen is stainless steel and gaskets are composition and neoprene.	
	Type 289A (includes only keys 5 and 9)	
	Neoprene diaphragm	R289A X00012
	Type 289L (includes only keys 5, 9, and 15)	
	Nitrile diaphragm and O-rings	
	3/4-inch body	R289L X00012
	1-inch body	R289L X00022
	Type 289H (1-inch body) and 289HH	
	Nitrile diaphragm and O-rings	R289H X00012
	Fluoroelastomer diaphragm and O-rings	R289H X00032
	Type 289H, 2-inch body (includes keys 5, 9, 15, 19, 20 and 38)	
	Nitrile diaphragm and O-rings	R289H X00022
	Fluoroelastomer diaphragm and O-rings	R289H X00042
	Type 289U (includes only keys 5 and 9)	
	Nitrile diaphragm	R289U X00012
1	Valve Body	
	Type 289A, zinc	0Y0710 44022
	Type 289U, zinc	1B0438 44012
	Types 289H (1-inch body) and 289HH, Aluminum	3U8882 08012
	Type 289H (2-inch body), cast iron	31B1992 X012
	Type 289L, aluminum	
	3/4-inch body	3L4070 08012
	1-inch body	3L4069 08012
2	Spring Case/Spring Case Assembly	
	Type 289A, zinc	1A5051 44022
	Types 289H (1-inch body) and 289HH, Aluminum	1P9017 08012
	Type 289H (2-inch body), zinc/steel	1E7020 000A2
	Type 289L, aluminum	3L3338 X0012
	Type 289U, zinc	0B0616 44022
3	Diaphragm Head	
	Type 289A, zinc	0T0227 44022
	Type 289H, plated steel	
	1-inch body	1D6664 28982
	2-inch body	0W0202 25072
	Type 289HH, zinc plated steel	1P9014 25062
4	Spring Seat	
	Type 289A, brass	0T0226 14012
	Type 289U, zinc	1B3725 44022
	Types 289H (1-inch body) and 289HH, Plated steel	1D6671 25072
5*	Diaphragm/Diaphragm Assembly	
	Type 289A, neoprene	1A5052 02102
	Types 289H (1-inch body) and 289HH	
	Nitrile	1E6066 02052
	Fluoroelastomer	1E6066 02342
	Type 289H (2-inch body)	
	Nitrile	1D7800 02052
	Fluoroelastomer	1D7800 02332
	Type 289L	
	Nitrile(1)	
	3/4 & 1-inch body, standard	AL4068 000A2
	Fluoroelastomer(2) (1-inch body)	1N3130 X0012
	Type 289U(3), nitrile	18A281 5X012
6	Adjusting Screw	
	Type 289A, brass	1A5684 14012
	Types 289H (1-inch body) and 289HH, plated steel	1D9954 48702
	Type 289H (2-inch body) zinc	1B5379 44012
	Type 289L, Delrin(4)	T10071 06642
	Type 289U, brass	0F0581 14012
7	Spring	See table 2
8	Machine Screw, plated steel	
	Type 289A (6 req'd)	1B7774 28982
	Types 289H and 289HH, 1-inch body (8 req'd)	1A3917 24052
	Type 289H, 2-inch body (8 req'd)	1A4078 24052
	Type 289L (8 req'd w/o wire seal, 7 req'd w/wire seal)	1B2856 28982
	Type 289L (1 req'd w/wire seal)	1L9277 28982
	Type 289U (6 req'd)	1A3451 28982
9	Screen, Stainless steel	
	Type 289L	
	3/4-inch body	1B6335 38392
	1-inch body	1E5648 43122
	Types 289A and 289U	0L0783 43062
	Types 289H and 289HH, 1-inch body	1E5648 43122
	Type 289H, 2-inch body	11B1994 X012
10	Orifice	
	Type 289A, Aluminum	0T0225 09012
	Type 289H (2-inch body)	
	Brass	1E7026 13012
	Stainless steel	1E7026 35072
	Type 289L	
	Aluminum	1L4064 09012
11	Hex Nut	
	Types 289A and 289U, Brass	1A5054 18992
	Types 289H (1-inch body) and 289HH, Zinc plated steel	1D6677 28982
	Type 289H (2-inch body), Zinc plated steel	D7801 24272
13	Snap Ring	
	Type 289L, Stainless steel	
	3/4-inch body	1B6336 38992
	1-inch body	1E5649 37022

* Recommended spare part.
1. Assembly also includes an aluminum pitot tube and bushing, a zinc plated steel spring seat and diaphragm head, and a neoprene seat pad.
2. Assembly also includes an aluminum pitot tube, bushing, and diaphragm head, a 302 stainless steel spring seat, and a neoprene seat pad.
3. Assembly also includes a zinc diaphragm head.
4. Trademark of E.I. duPont de Nemours Co.

Specifications
U5 Series

Straight-Through Silencer

NOTE: U5 Series Standard Paint and Acoustical Packing are suitable for 325°F.

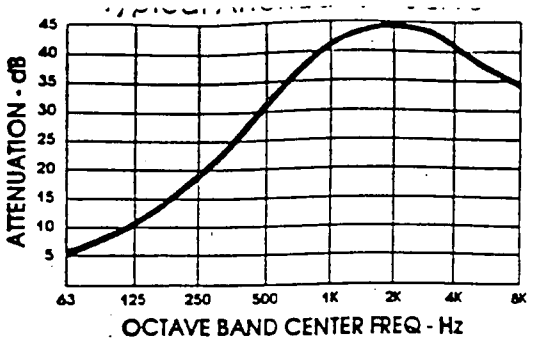

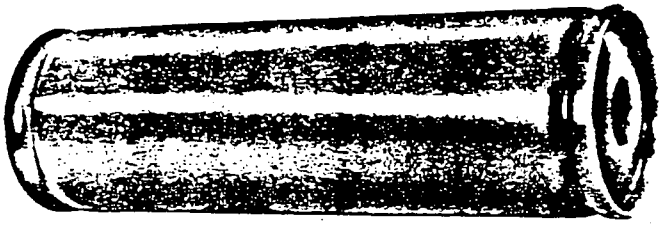

The U5 series is a premium, straight-through, absorptive silencer. It provides excellent noise attenuation due to its very high length to diameter ratio. It is especially well suited for inlet service on small rotary positive or centrifugal blowers or the discharge of vacuum pumps. Mild steel construction with enamel paint.

Common Applications:

- Blower inlet
- Vacuum Pump discharge
- Air Valves and cylinders
- Small low pressure vents
- Any high frequency noise source

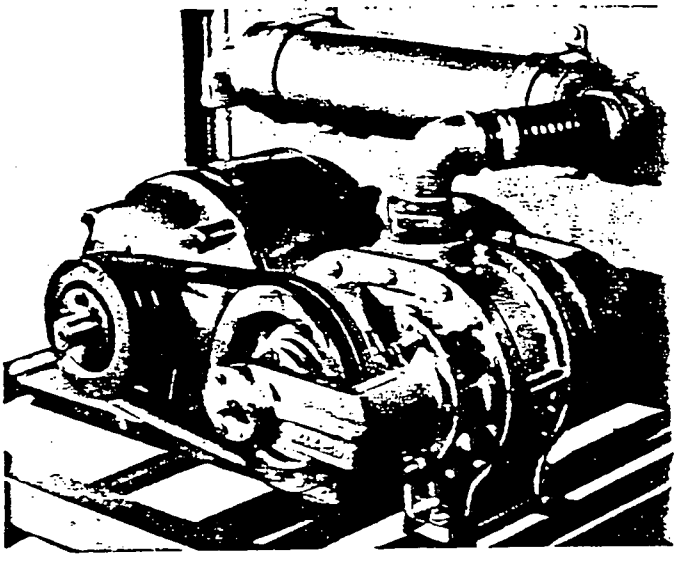

Typical Installation shows U5 silencer on inlet of small rotary positive blower.

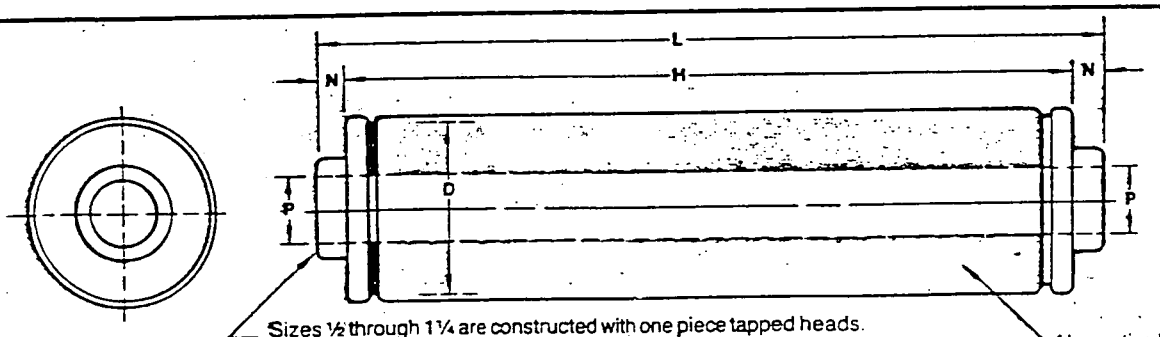

Sizes ½ through 1¼ are constructed with one piece tapped heads. The tapped opening is approximately flush with the end on the shell. Sizes ½ through 4: Female NPT pipe connections. Sizes 5 and 6: 125#/150# ANSI drilled flanges.

Absorptive Material

MODEL	P	D	L	N	H	WGT.
U5-½	½	3¼	8	—	8	2
U5-¾	¾	3¼	11	—	11	3
U5-1	1	3¼	14	—	14	3
U5-1¼	1¼	3¼	16	—	16	4
U5-1½	1½	4¼	19¾	½	18⅞	6
U5-2	2	5⅛	26	½	25	10
U5-2½	2½	6⅛	33½	½	32½	15
U5-3	3	6⅝	36½	½	35½	20
U5-3½	3½	7⅛	42½	⅝	41¼	30
U5-4	4	8	48⅞	⅛	48¾	40
U5-5	5	10	57	3	51	60
U5-6	6	12	63	[illegible]	57	100

Dimensions in Inches - Weigh: in Pounds

RATEMASTER® FLOWMETER
Installation and Operating Instructions

DIMENSIONS & MOUNTING INFORMATION

DIMENSIONS – IN INCHES	RMA	RMB	RMC
A	4-9/16	8-1/2	15-1/8
B	3	6-7/16	12-1/4
C	1/8 NPT CONN. 1-5/8" 10-32 THDS.	1/4 NPT CONN. 3-15/16 1/4-20 THDS.	1/2 NPT CONN. 8-3/4 3/8-24 THDS.
D	3/8	5/8	1
E	1-1/16	1-7/8	2-3/4
F	1-3/16	1-3/4	2-1/4
G	11/16	1	1-7/16
H	1	1-7/16	1-31/32
I (OPEN)	1-3/8	1-13/16	2-1/2
J	3/4	1-1/4	2
K	4-13/16	8-3/4	15-3/8
L	1	1-1/2	2-1/4

PANEL CUT OUT
(FOR FLUSH MOUNTING)

HIGH	4-5/8	8-9/16	15-3/16
WIDE	7/8	1-5/16	2-1/16

PANEL HOLE SIZES
(FOR SURFACE MOUNTING)

PIPE	7/16	5/8	15/16
BOLT	1/4	9/32	13/32

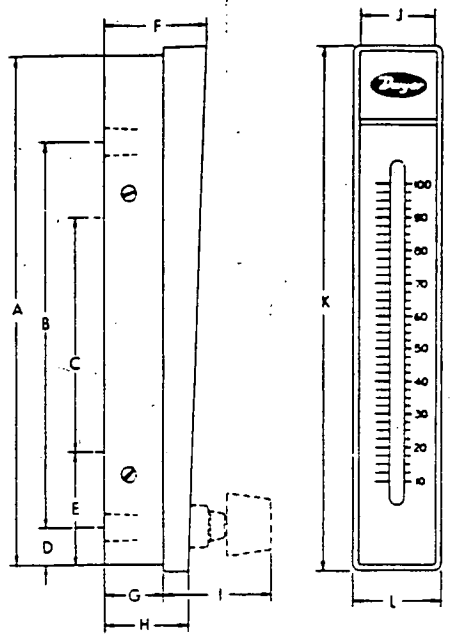

Figure 1

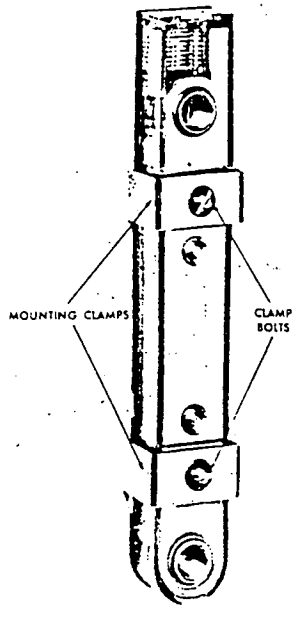

Figure 2

Dwyer Rate-Master® Series RM Flowmeters are furnished in three models (see Figure 1) each available in a broad choice of flow ranges with direct reading scales for air, gas or water. Installation, operation and maintenance are very simple and only a few common sense precautions must be observed to assure long, trouble-free service.

CAUTION

Dwyer Rate-Mater(R) flowmeters are designed to provide satisfactory long term service when used with air, water or other compatible media. Refer to factory for information on questionable gases or liquids. Avoid solutions of acids, bases or salts having a pH below 5.0 or above 8.5. Caustic solutions, anti-freeze (ethylene glycol) and aromatic solvents should definitely not be used.

CALIBRATION

Each Dwyer flowmeter is calibrated at the factory. If at any time during the meter's life, you wish to recheck its calibration, do so only with devices of certified accuracy. DO NOT attempt to check the Dwyer Rate-Master® Flowmeter with a similar flowmeter as seemingly unimportant variations in piping and back pressure may cause noticeable differences in the indicated reading. If in doubt, return your Dwyer flowmeter to the factory. It will be calibration checked for you at no charge.

Before proceeding with the installation of your Dwyer Rate-Master Flowmeter, check to be sure you have the model and flow range you require.

LOCATION

TEMPERATURE, PRESSURE, ATMOSPHERE, AND VIBRATION: Rate-Master Polycarbonate Flowmeters are exceptionally tough and strong. They are designed for use at pressures up to 100 PSI (RMB units 70 PSI, RMC 35 PSI) and temperatures up to 130 deg. F. DO NOT EXCEED THESE LIMITS! The installation should not be exposed to strong chlorine atmospheres or solvents such as benzene, acetone, carbon tetrachloride, etc. The mounting panel should be free of excessive vibration since it may prevent the unit from operating properly.

INLET PIPING RUN: It is good practice to approach the flowmeter inlet with as few elbows and restrictions as possible. In every case the inlet piping should be at least as large as the connection to the flowmeter i.e. 1/8" Iron Pipe Size for RMA, 1/4" IPS for RMB and 1/2" IPS for RMC. Length of inlet piping makes little difference for normal pressure fed flowmeters.

For flowmeters on vacuum air service the inlet piping should be as short and open as possible. This will allow operation near atmospheric pressure and thereby insure the accuracy of the device. (Note that for vacuum air service the flow control valve if any, should be on the discharge side of the flowmeter. Either the TMV unit or a separate in line valve may be applied.)

DISCHARGE PIPING: As on the inlet, discharge piping should be at least as large as the flowmeter connection. In addition, for pressure fed flowmeters on air or gas service the discharge piping should be as short and open as possible. This will allow operation of the flow tube at near atmospheric pressure and insure the accuracy of the device. This is of less importance on water or liquid flowmeters since the flowing medium is generally incompressible and moderate back pressure will not affect the accuracy of the instrument as calibrated.

POSITION AND MOUNTING

All Rate-Master Flowmeters must be mounted in a vertical position with the inlet connection at the bottom rear and outlet at top rear.

BEZEL OR THROUGH PANEL MOUNTING: Make the panel cutout using the appropriate dimensions from Figure 1. Flowmeter must fit into the panel freely without force or squeeze.

Insert the Rate-Master Flowmeter from the front of the panel and install the mounting clamps from the rear, insert and tighten the clamp bolts in the locations shown in Figure 2. Do not exceed 5 in./lbs. Make connections to inlet and outlet ports using small amount of RTV sealant or Teflon* thread tape to avoid leakage. Avoid excess torque which may damage flowmeter body.

RATEMASTER® FLOWMETER
Instructions

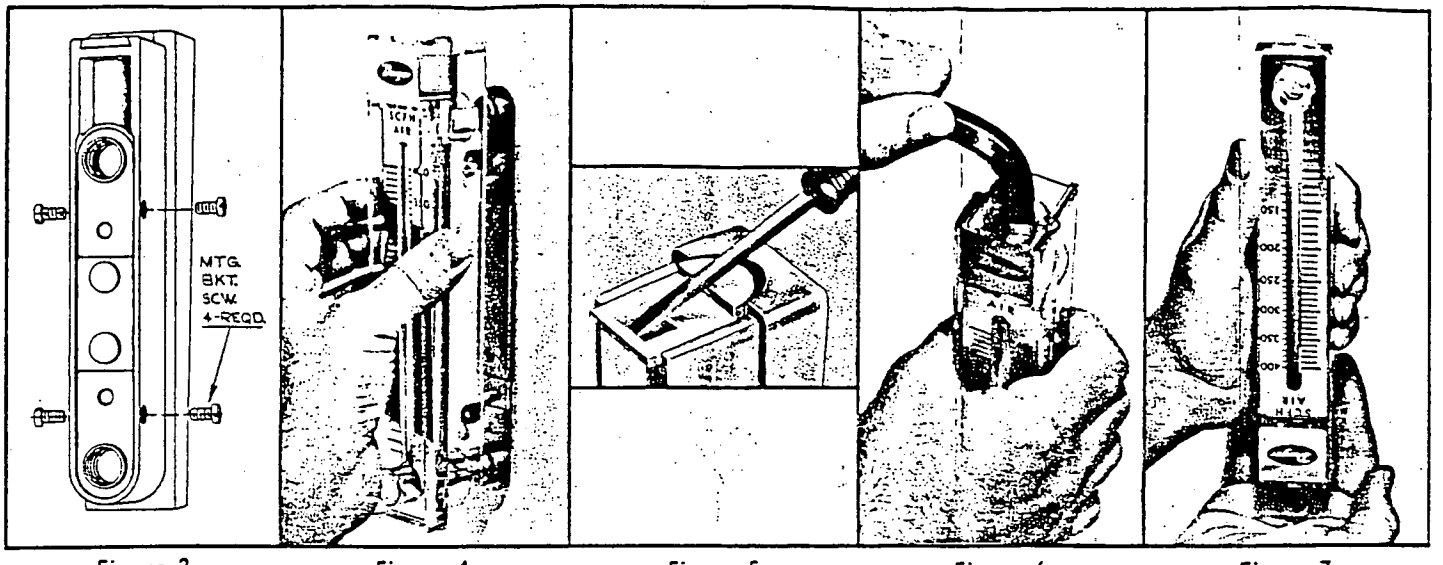

Figure 3 Figure 4 Figure 5 Figure 6 Figure 7

SURFACE MOUNTING: Drill appropriate holes in panel using the dimensions shown in Figure 1. Hold the flowmeter in position in front of the panel and install the clamp bolts through the panel from the rear. (The mounting clamps may be used as washers if desired by installing them backwards or straightening them out.) Pipe up inlet and discharge following the directions in previous sections.

SURFACE MOUNTING ON PIPING ONLY: An alternate method of surface mounting omitting the clamp bolts and supporting the Rate-Master Flowmeter on the connecting piping only is possible. For this method extra long or straight pipe threads should be used so that nuts may be run onto the pipe and later tightened against the back of the panel to retain the unit in proper position. Use the appropriate hole layout information from Figure 1, but omit the small holes.

MOUNTING ON PIPING ONLY WITHOUT PANEL: For a temporary or laboratory type installation, the panel may be omitted altogether and the flowmeter installed directly in rigid piping. Its light weight permits this without difficulty.

OPERATION

To start system, open the valve slowly to avoid possible damage. Rate of flow is read at the point of maximum horizontal width for spherical floats or at the top of the largest diameter for non-spherical floats. Control valves on BV and SSV models are turned clockwise to reduce flow, counter clockwise to increase flow. A nylon insert is provided in the threaded section of the valve stem to give a firm touch to the valve and to prevent change of setting due to vibration.

CAUTION

Do not completely unscrew valve stem unless flowmeter is unpressurized and drained of any liquid. Removal while in service will allow gas or liquid to flow out front of valve body and could result in serious personal injury. For applications involving high pressure and/or toxic gasses or fluids, special non-removable valves are available on special order. Contact factory for details.

MAINTENANCE

The only maintenance normally required is occasional cleaning to assure reliable operation and good float visibility.

DISASSEMBLY: The flowmeter can be disassembled for cleaning simply as follows:

1. Remove valve knob from RMB or RMC — BV or SSV units by pulling the knob forward. It is retained by spring pressure on the stem half-shaft so that a gentle pull will remove it. On RMA-BV or SSV models, turn the valve knob counter-clockwise until the threads are disengaged. Then withdraw the stem from the valve by gently pulling on the knob.

2. Remove the four mounting bracket screws located in the sides of the flowmeter. See Figure 3.

Pull the flowmeter body gently forward away from the back plate and pipe thread connections. Keep the body parallel with the back plate to avoid undue strain on the body. Leave the piping connections intact. There is no need to disturb them. See Figure 4.

3. Remove the slip cap with a push on a screwdriver as shown in Figure 5. Remove the plug-ball stop as shown in Figure 6 using allen wrench sizes as follows: Model RMA — 1/4', Model RMB — 1/2", and Model RMC — 3/4".

4. Take out the ball or float by inverting the body and allowing the float to fall into your hand as shown in Figure 7. (Note: It is best to cover the discharge port to avoid losing the float through that opening.)

CLEANING: The flow tube and flowmeter body can best be cleaned with a little pure soap and water. Use of a bottle brush or other soft brush will aid the cleaning. Avoid benzene, acetone, carbon tetrachloride, alkaline detergents, caustic soda, liquid soaps (which may contain chlorinated solvents), etc. and avoid prolonged immersion which may harm or loosen the scale.

REASSEMBLY: Simply reverse Steps 5A, 1 through 4 and place back in service. A little stop cock grease or petroleum jelly on the "O" rings will help maintain a good seal as well as facilitate assembly. No other special care is required.

ADDITIONAL INFORMATION

For additional flowmeter application information, conversion curves, factors and other data covering the entire line of Dwyer Rate-Master Flowmeters, send for Bulletin F-41.

© Copyright 1988 Dwyer Instruments, Inc.

56 - 440197 - 00
Litho in U.S.A. 9/88

Series RM Rate-Master® Flowmeters

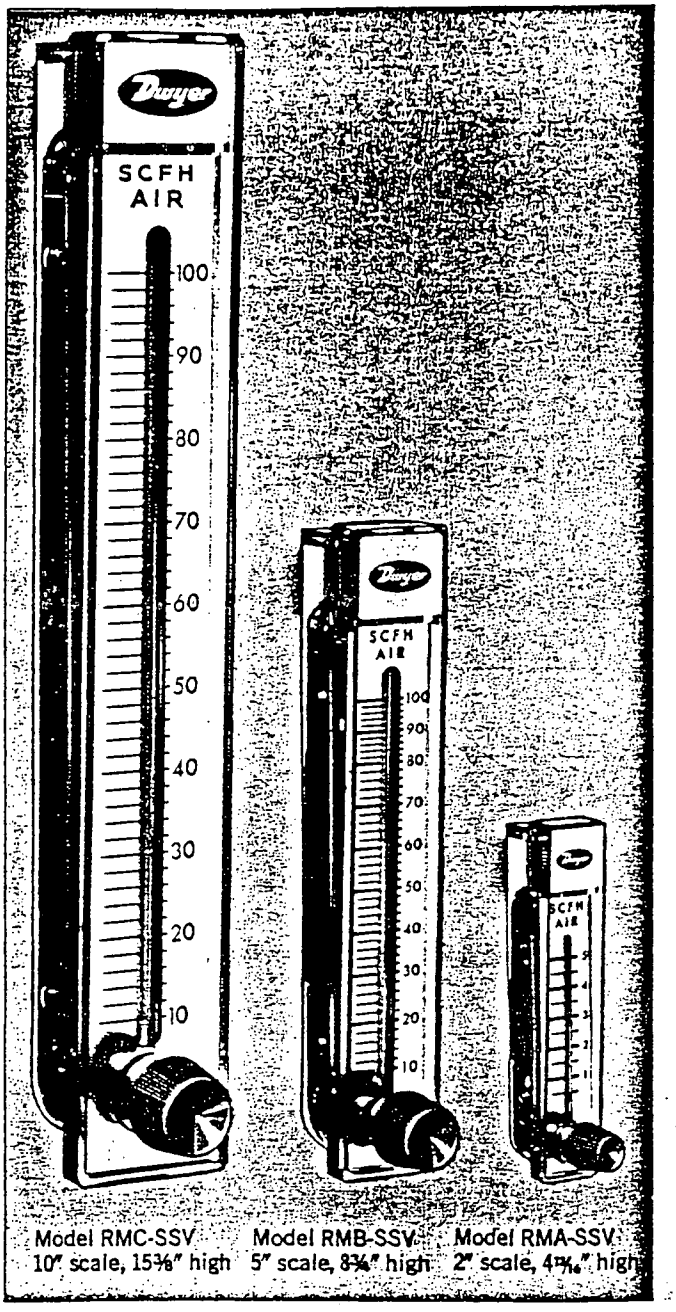

Model RMC-SSV 10" scale, 15⅜" high | Model RMB-SSV 5" scale, 8¾" high | Model RMA-SSV 2" scale, 4 7/16" high

Molded of tough polycarbonate plastic. Used to indicate or manually control air or gas flow from .1-1800 SCFH... water flows to 8 GPM

The Dwyer Rate-Master line of direct reading precision flowmeters incorporates many unique user features at moderate cost. These low cost flowmeters are ideal for general use.

Easy to read design – The direct reading scales eliminate troublesome conversions. The scales are brushed aluminum, coated with epoxy and the graduations are on both sides of the indicating tube. Special integral flow guides stabilize the float throughout the range to keep it from hunting or wandering in the bore. The float is highly visible against a white background.

Construction assures accuracy–All Rate-Master flowmeter bodies are injection molded of tough, clear, shatter-proof polycarbonate plastic around a precision tapered pin. Critical internal diameter of the variable orifice tube is held within ± 0.0004". The result is accurate and repeatable readings. The single piece plastic body is mounted to a stainless steel backbone into which pipe thread inserts are welded to absorb piping torque. Precision metering valves of brass or stainless steel (specify BV or SSV on order) are available as an optional extra and permit precise flow adjustments. For vacuum applications, Model RMA units are available with top mounted valves (specify TMV). The small Series RMA models are accurate within ± 4% of full scale reading; Series RMB within ± 3%; large Series RMC within ± 2%.

Installation is simple – The Rate-Master can be neatly through-panel mounted to keep flow tube centers in the same plane as the panel surface or surface mounted on the panel by means of tapped holes in the backbone. When through-panel mounted, the bezel automatically positions the instrument at the correct depth in the panel cutout. Surface mounted units can also be held in place by the piping. All mounting hardware plus installation and operating instructions are included.

Cleaning is easy–To release the plastic flowmeter body from the stainless steel backbone, just remove four screws. Pipe thread flow connections remain undisturbed. Remove the slide cover and the plug ball stop, clean the flow tube with soap and water and reassemble. It's that simple.

Specials – See page 5 for typical examples of special ranges, scales, mounting arrangements, etc., available on special order, or in OEM quantities.

Easy-to-interchange bodies – Within a given Series, Rate-Master flowmeter bodies can be instantly interchanged. Simply "unplug" the body from backbone and replace it with another. "O" rings provide a tight seal on inlet and outlet. Piping remains undisturbed. Interchangeability is useful where different scale ranges are sometimes required at the same location in the laboratory or plant.

Top Mounted Metering Valves – Same precision construction for vacuum applications.

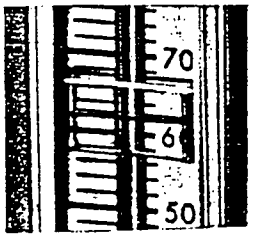

Adjustable pointer flags–Red-lined pointer flags provide quick visual reference to a required flow level. Of clear plastic, they snap into place inside bezel and slide to desired level.

SPECIFICATIONS		
Meter Body, Bezel and Tube	Polycarbonate	
Wetted Metal Parts	Stainless Steel (except for optional brass valves)	
Floats	St. Steel, Blk. Glass, Alum., K Monel, Tung. Carbide	
Float Stops	Polycarbonate	
Pipe Connections	Model RMA, ⅛"; Model RMB, ¼"; Model RMC, ½" NPT	
"O" Rings	Neoprene and Buna N	
Fittings	Stainless Steel brazed to Stainless Steel backbone plate	
Rivets	Stainless Steel, set into slots	
Scale	Brushed Aluminum—Clear Epoxy Coated	
Knobs	ABS Plastic	
Pressure Rating	RMA 100 P.S.I., RMB 70 P.S.I., RMC 35 P.S.I. max.	
Temperature Rating	To 130° F. maximum	
Accuracy	Model RMA, 4%; Model RMB, 3%; Model RMC, 2% of full scale	
	OPTIONS AND ACCESSORIES	CODE
Metering Valve	Brass	BV
	Stainless Steel	SSV
Top Mounted Valve	Stainless Steel—available only on RMA for air (vacuum applications)	TMV
Pointer Flag	Polycarbonate	PF

Series RM RATE-MASTER® Models and Ranges

Model RMA—2" Scale		Model RMB—5" Scale		Model RMC—10" Scale	
Range SCFH Air	Ordering No.	Range SCFH Air	Ordering No.	Range SCFH Air	Ordering No.
.05-.5	1	.5-5	49	5-50	101
.1-1	2	1-10	50	10-100	102
.2-2	3	2-20	51	20-200	103
.5-5	4	5-50	52	40-400	104
1-10	5	10-100	53	60-600	105
2-20	6	20-200	54	100-1000	106
5-50	7	40-400	55	120-1200	107
10-100	8	50-500	56	180-1800	108
15-150	9	60-600	57	SCFM Air	
20-200	10	Gal. Water per hour		1-10	121
CC Air/min.				2-20	122
5-50	151*	1-12	82	3-30	123
10-100	150*	1-20	83	Gal. Water per hour	
30-240	11	4-40	84		
50-500	12	10-100	85	2-20	134
100-1000	13			8-90	135
200-2500	14			Gal. Water per min.	
LPM Air					
.5-5	26			.1-1	141
1-10	21			.2-2.2	142
2-25	22			.4-4	143
5-50	23			.8-7	144
5-70	24			1.2-10	145
10-100	25				
CC Water/min.					
5-50	32				
10-110	33				
20-300	34				
Gal. Water/hr.					
1-11	42				
2-24	43				
4-34	44				
5-50	45				

*Accuracy ± 8%

CAUTION

Dwyer Rate-Master® flowmeters are designed to provide satisfactory long term service when used with air, water, or other compatible media. Refer to factory for information on questionable gases or liquids. Caustic solutions, anti-freeze (ethylene glycol) and aromatic solvents should definitely not be used.

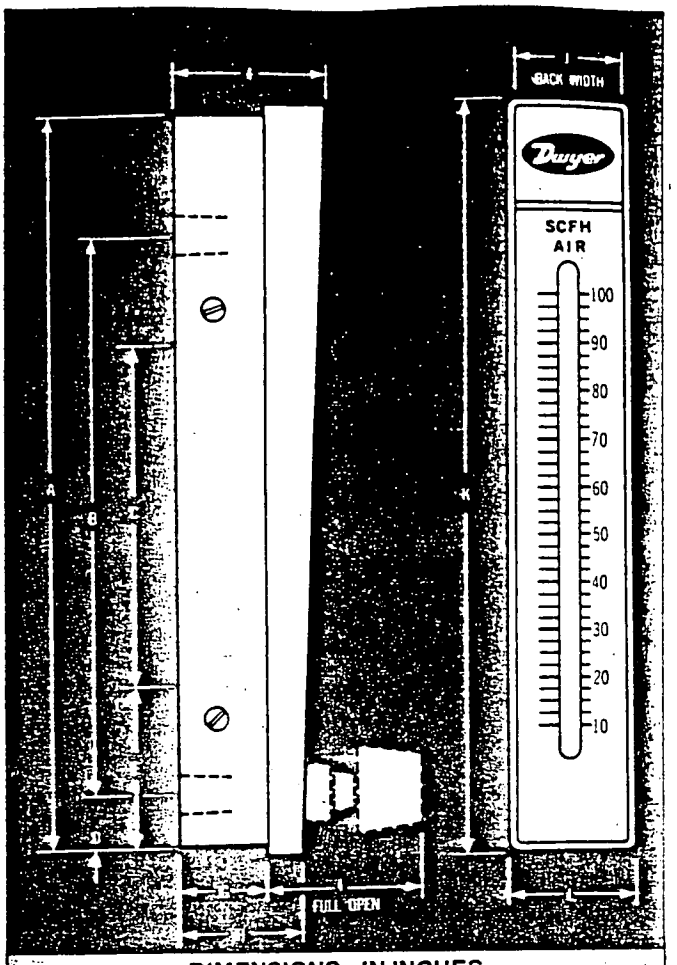

DIMENSIONS—IN INCHES

	Model RMA	Model RMB	Model RMC
A	4 9/16	8½	15⅛
B	3 ⅛ NPT Conn.	6 7/16 ¼ NPT Conn.	12¼ ½ NPT Conn.
C	1⅝ 10-32 Thds.	3 15/16 ¼-20 Thds.	8¾ ⅜-24 Thds.
D	⅜	⅝	1
E	1 1/16	1⅞	2¾
F	1 3/16	1¾	2¼
G	¾	1	1 7/16
H	1	1 7/16	1 31/32
I (OPEN)	1⅜	1 13/16 (BV or SSV MODELS ONLY)	2½
J	¾	1¼	2
K	4 13/16	8¾	15⅜
L	1	1½	2¼

How To Order

1. Select model desired by letter designation. RMA, RMB, or RMC.
2. Specify range desired by adding the order number after a dash following the letter designation. Example RMA-6.
3. If additional features are required, and available, add the option designation to the basic model code —e.g.: BV for Brass Valve, SSV for Stainless Steel Valve, and TMV for Top Mounted Valve. For example, RMA-6-SSV is the 2" scale flowmeter range No. 6 with a stainless steel valve.
4. Add accessories as desired.

BULLETIN NO. A-

INSTALLATION AND OPERATING INSTRUCTIONS

Minihelic II Differential Pressure Gage

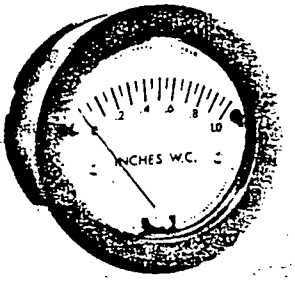

PHYSICAL DATA — SPECIFICATIONS

Dimensions: 2 29/32" x 2 7/16"
Weight: 6 oz.
Rated Total Pressure: 50 PSIG surge, 30 PSIG continuous to either pressure connection.
Ambient Temperature Range: 20°F to 120°F
Finish: Black
Accuracy: ±5% of full scale at 70°F
Housing: filled nylon case; high impact acrylic lens
Connections: standard; barbed for 3/16" I.D. tubing, optional; 1/8 NPT male
Standard Accessories: (2) 4-40 x 1 5/8" mounting studs, (2) 4-40 hex nuts, (1) .050" hex allen wrench, (1) panel mounting bracket.
Caution: Use with air or compatible, non-corrosive gases only.

DIMENSIONS — MOUNTING HOLE SIZES AND LOCATIONS

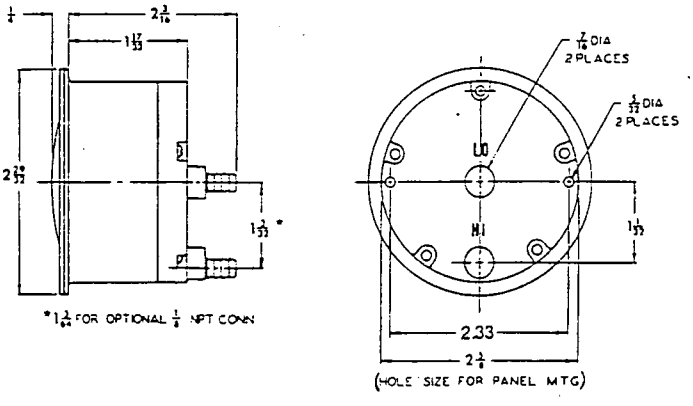

INSTALLATION

1. Select a location free from excessive vibration and where the ambient temperature will be between 20-120°F. Sensing lines may be any length necessary without affecting accuracy. However, long runs of tubing will dampen readings slightly and cause a minor increase in response time. If pulsing pressure or vibration cause excessive pointer oscillation, contact factory for ways to provide additional damping.
2. The gage is calibrated and zeroed in the vertical position at the factory. If the gage is used in any other position, it must be rezeroed each time the position is changed. Gages with ranges under 5 in. w.c. or equivalent should be used only in the vertical position unless special calibration was specified when ordering.

©Copyright 1989, DWYER INSTRUMENTS, INC.

Continued

DWYER INSTRUMENTS, INC.
P.O. BOX 373 • MICHIGAN CITY, INDIANA 46360, U.S.A.
Telephone 219/879-8000
Fax 219/872-9057 Telex 25916

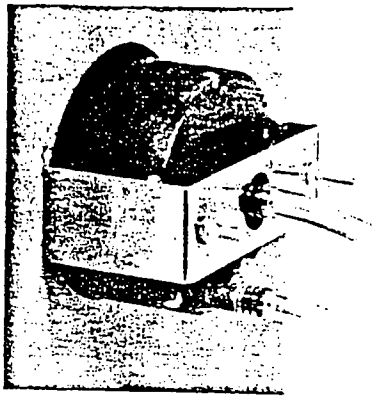

PANEL MOUNTED INSTALLATION

3. To surface mount gage, drill two 5/32" holes on a horizontal line, 2.33" apart for mounting screws. Next drill two 7/16" holes 1 1/32" apart on a vertical line for pressure connections. Install mounting studs in back of gage, insert through holes in panel and secure with hex nuts provided. Be careful not to block the slotted hole near the right hand mounting hole. This provides a path for pressure relief in the event of overpressurization.
4. To panel mount gage, cut a 2 5/8" dia. hole. Install mounting studs in back of gage, position gage in panel and place bracket over studs. Thread hex nuts over studs and tighten.
5. After installation, the gage may need to be zeroed before placing in operation. If re-zeroing is required, firmly hold case of gage with one hand and unscrew front cover with the palm of the other hand in a counterclockwise direction. If difficult to loosen, place a small sheet of rubber between the cover and the palm of the hand. Zero adjust screw is located behind the scale at the point marked "zero". Use hex allen wrench supplied and adjust until pointer is on zero. This must be done with both pressure connections vented to atmosphere and the gage oriented in the final mounting position. Replace cover.
6. To measure positive pressure, connect tubing to port marked "HI" and vent "LO" port to atmosphere. For negative pressure (vacuum) connect to port marked "LO" and vent "HI" port to atmosphere. For differential pressure connect higher pressure to port marked "HI" and lower to "LO" port. If gage is supplied with 1/8" NPT connections, be careful not to overtighten fittings to avoid damage to the gage.

CALIBRATION CHECK

Select a second gage or manometer of known accuracy and in an appropriate range. Use short lengths of rubber or vinyl tubing to connect the high pressure side of the Minihelic gage and the test gage to two legs of a tee. Very slowly apply pressure through the third leg. Allow enough time for pressure to equalize throughout the system and for fluid to drain if a manometer is being used. Compare readings. If gage being tested exceeds rated accuracy, it should be returned to the factory for recalibration.

MAINTENANCE

No lubrication or periodic servicing is required. Keep case exterior and cover clean. Occasionally disconnect pressure lines to vent both sides of gage to atmosphere and re-zero per paragraph 5.

Litho in U.S.A. 11/89

FR. NO. 14-440434-00

Dwyer

DWYER INSTRUMENTS, INC.
P.O. Box 373, Michigan City, Ind. 46360
Telephone 219/879-8000 Fax 219/872-9057 Telex 25916

Dwyer®

SERIES 2-5000

Minihelic II® Differential Pressure Gages

Combining high accuracy, readability, compactness, dependability, and low cost.

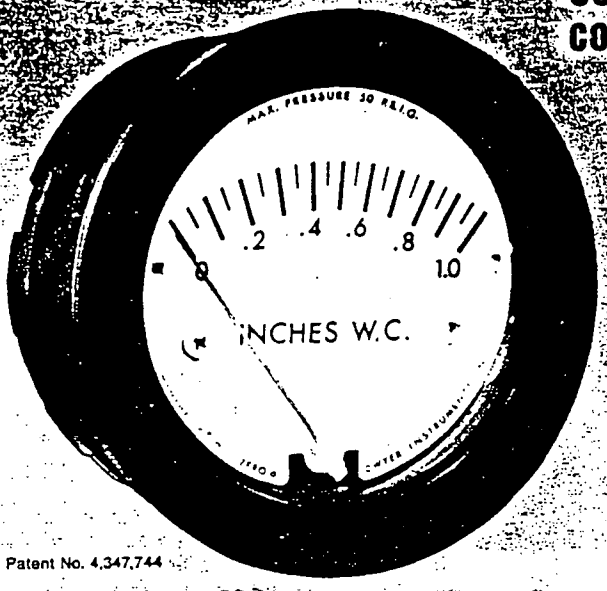

Patent No. 4,347,744

The Series 2-5000 Minihelic II low differential pressure gage provides excellent reliability in a compact size.

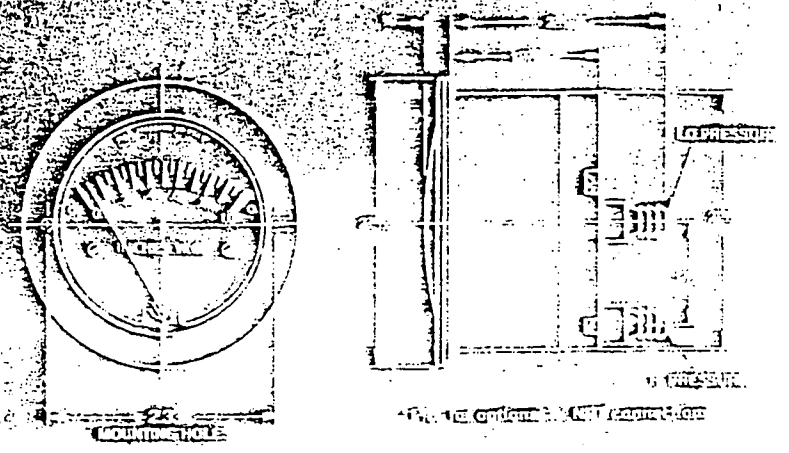

Dimensions Series 2-5000 Minihelic II Gage

Combining clean design, small size and low cost with enough accuracy for all but the most demanding applications our Minihelic II® gage offers the latest in design features for a dial type differential pressure gage. It is our most compact gage but is easy to read and can safely operate at total pressures up to 30 PSIG. The Minihelic II is designed for panel mounting in a single 2⅝" diameter hole. Standard pressure connections are barbed fittings for 3/16" I.D. tubing; optional ⅛" NPT male connections are also available. Over-pressure protection is built into the Minihelic II gage by means of a blow-out membrane molded in conjunction with the diaphragm. Accidental over-ranging up to the rated total pressure will not damage the gage. With removable lens and rear housing, the gage may be easily serviced at minimum cost.

With the housing molded from mineral and glass filled nylon and the lens molded from polycarbonate, the gage will withstand rough use and exposure as well as high total pressure. The 5% accuracy and low cost of the Minihelic II gage make it well-suited for a wide variety of OEM and user applications. OEM applications include cabinet air purging, medical respiratory therapy equipment, air samplers, laminar flow hoods, and electronic air cooling systems. As an air filter gage, the Minihelic II finds many end use applications on large stationary engines, compressors, ventilators, and air handling units. The Minihelic II gage is suitable for many of the same applications as the Magnehelic gage where the greater accuracy, sensitivity, and higher and lower differential pressure ranges of the Magnehelic gage are not required.

Physical Data:

Ambient Temperature Range: 20° to 120°F.

Rated Total Pressure: 50 PSIG surge, 30 PSIG continuous to either pressure connection.

Accuracy: plus or minus 5% of full scale at 70°F.

Connections: Barbed, for 3/16" I.D. tubing (standard); male ⅛" NPT (optional)

Housing: Glass filled nylon; polycarbonate lens

Standard Ranges: See model-range chart

Finish: Black

Weight: 6 ozs.

CAUTION: FOR USE ONLY WITH AIR OR COMPATIBLE GASES.

PRESSURE CONNECTIONS

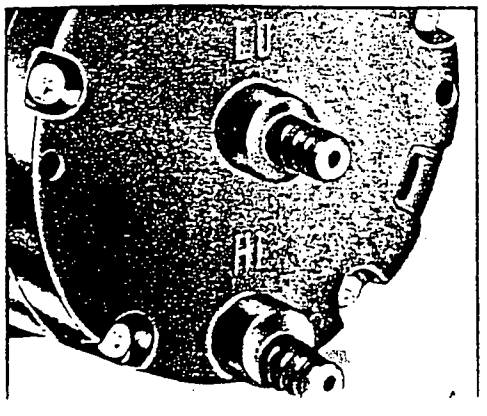

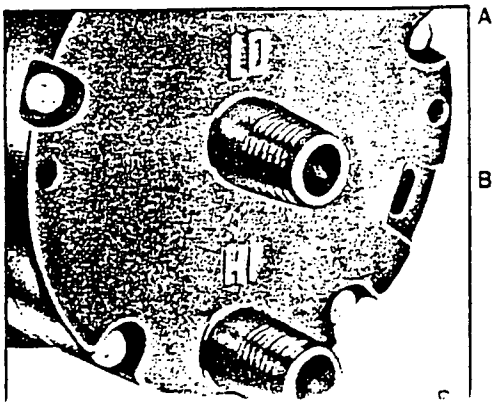

A The standard Minihelic II gage is supplied with two barbed pressure taps molded into the rear housing of the gage. These connections allow easy, fast connection to the gage using 3/16" I.D. rubber or plastic tubing.

B For applications in systems having higher total operating pressures, optional male ⅛" NPT pressure connections can be supplied.

Note the oblong over-pressure vent hole on the back of the gage at the right of the connections. This vent is sealed by a membrane molded in conjunction with the diaphragm and will blow out at approx.

Simplicity of Design Ensures Reliable Operation

Housing is molded from strong mineral and glass filled nylon.

Pointer stops of molded rubber prevent pointer over-travel without damage.

Full view lens is removable and molded of tough polycarbonate.

Aluminum scale litho-printed black on white, enhances readability.

Red tipped aluminum pointer, rigidly mounted to helix is easy to see.

Wishbone assembly provides mounting for helix, helix bearings, and pointer shaft.

Jewel bearings provide virtually friction-free helix motion.

Helix is free to rotate in jewel bearings. It aligns with magnetic field of magnet to transmit pressure indications to pointer.

Zero adjustment screw, located behind the removable lens, eliminates tampering.

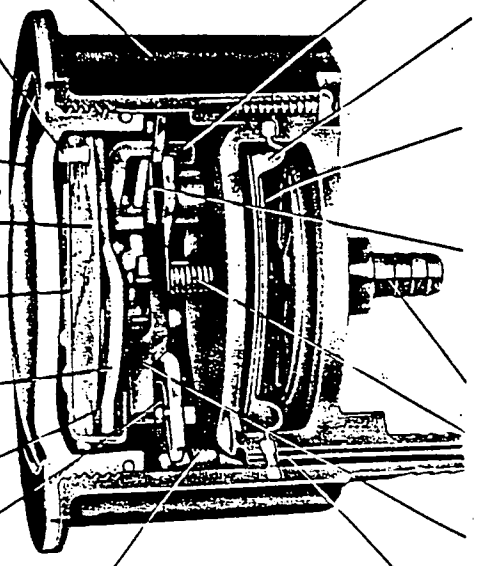

Range spring calibration clamp fixes live length of spring for proper gage calibration and is factory set and sealed.

Silicone rubber diaphragm allows accurate response to a broad range of temperatures and at extremely low pressure. Incorporates blow out area for overpressure protection.

Diaphragm support plates of lightweight aluminum on each side of the diaphragm minimize position or attitude sensitivity and help define pressure area.

Flat leaf range spring reacts to pressure on the diaphragm. Live length is adjustable for calibration. Small amplitude of motion minimizes inaccuracies and assures long life.

Low pressure tap connects to rear chamber.

Coil spring link provides a resilient connection between the diaphragm and the range spring.

Ceramic magnet mounted on a molded bracket at the end of the range spring rotates the helix without direct mechanical linkage.

High pressure tap connects with the front chamber through passageway in the plastic case and a sealing ring molded into the edge of the diaphragm.

Patent No. 4,347,744

PANEL MOUNTING

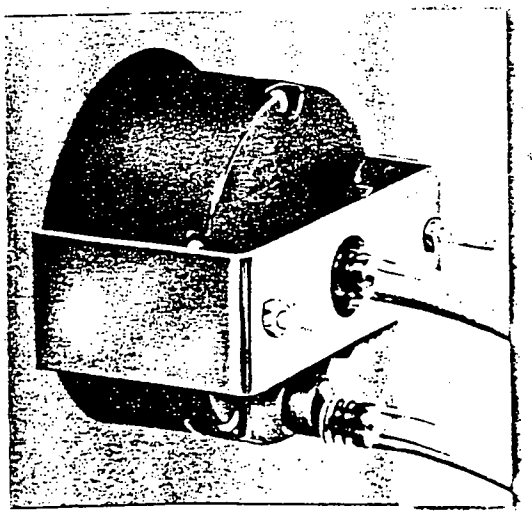

Mounting hardware is supplied with the Minihelic II gage for panel mounting through a single hole, 2⅝" in diameter. Panel thickness up to ½" can be accommodated with the hardware supplied. If necessary, surface mounting of the gage can be accomplished by means of two 4-40 screws into the tapped mounting bracket stud holes in the rear of the gage. Surface mounting requires clearance holes in the panel for the two pressure taps.

MODEL-RANGE CHART

Model Number	Range, Inches of Water	Minor Div.
2-5000-0	0-0.5	.02
2-5001	0-1.0	.05
2-5002	0-2.0	.10
2-5003	0-3.0	.10
2-5005	0-5.0	.20
2-5010	0-10	.50
2-5020	0-20	1.00
2-5040	0-40	2.00
2-5060	0-60	2.00
2-5100	0-100	5.00

Model Number	Range, PSI	Minor Div.
2-5205	0-5	.2
2-5210	0-10	.5
2-5215	0-15	.5
*2-5230	0-30	1.0

Model Number	Range, MM of Water	Minor Div.
2-5000-25MM	0-25	1.0
2-5000-50MM	0-50	2.0
2-5000-100MM	0-100	5.0

Model Number	Range, Pascals	Minor Div.
2-5000-125 Pa	0-125	5.0
2-5000-250 Pa	0-250	10
2-5000-500 Pa	0-500	20

Model Number	Range, kPa	Minor Div.
2-5000-1 kPa	0-1	.05
2-5000-3 kPa	0-3	.10

*THIS RANGE EMPLOYS SPIRALLY WOUND BERYLLIUM COPPER BOURDON TUBE POINTER DRIVE MECHANISM.

NOTE: CONSULT FACTORY REGARDING AVAILABILITY OF ADDITIONAL RANGES.

Suggested Specification:

A differential pressure gage for measuring (state purpose) shall be installed. Gage shall be diaphragm actuated, round dial type, 2 3/32" O.D., black scale markings on a white background, pointer zero adjustment, and (state type) pressure connections. Gage shall be Dwyer Instruments, Inc. Minihelic II, Catalog No. ____ reading to _____" w.c. in _____" divisions.

FEATURES

- One-piece Molded Fiberglass
- Polyurethane Foam Insulation
- Polycross Link 3½ x 3½ Hinges Non-corrosive
- Nylon Bolts and Nuts
- 7" Cast Aluminum Handle
- 30 lb. Spring Loaded Latch
- Molded Fiber-glass Base
- Nest for Shipping
- Easy Access
- Light Weight

TYPICAL MOLDED COVER

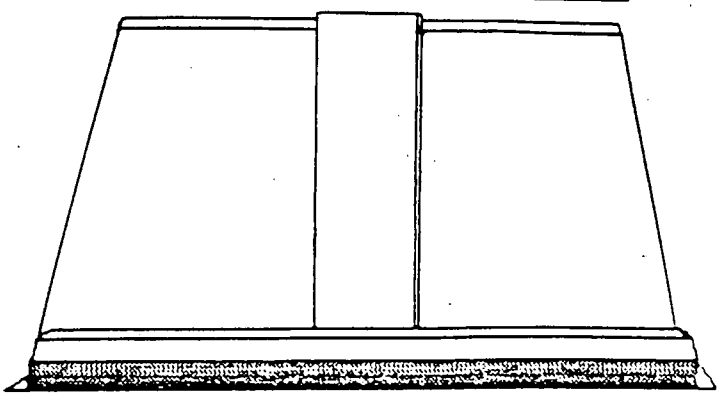

DYER FIBERGLASS, INC.
P. O. BOX 311 DYER, TN. 38330

SIZES AVAILABLE

D-207-48:	63"l, 44"w, 48"h
D-207:	60"l, 41"w, 38"h
D-101:	63"l, 36"w, 40"h
D-106:	50"l, 40"w, 42"h
D-100:	43"l, 30"w, 36"h
D-105:	47"l, 23"w, 26"h
D-102:	27"l, 20"w, 29"h

SPECIFICATIONS: The molded fiberglass enclosure shall be constructed with rigid thixotropic resin and 30% glass chopped in 2" random pattern 3/32" to 3/16". Exterior finish to be white orthophthalic polyester gel-coat .02" to .04". Inside surface to be insulated with 2 lb. density sprayed-on polyurethane foam ½" to 1½". Fiberglass base is hinged using polycross link 3½" x 3½" non-corrosive hinges. Thirty pound spring loaded latch hooks to 7" cast aluminum handle. All hardware is attached with nylon bolts and nuts.

FIBERGLASS MODULAR ENCLOSURE

FEATURES

- Variation in Size & Design
- 2" or 4" Wall Construction
- Corrosion Resistant Fiberglass Encapsulation
- Polyurethane Foam Insulation
- Quick Installation
- Standard White Color
- Removable Walls & Roof
- Hinged or Lift-Off Doors
- Stainless Steel Fasteners
- Door Seal Gasket
- No Painting
- Easily Assembled or Disassembled
- Shipped Knocked Down
- Non-Corrosive Hardware

OPTIONS

- Louvered Vent
- Exhaust Fan
- Thermostat for Fan
- Electrical Package
- Plexiglass Door Window
- Various Colors Available
- Stainless Steel Handle
- Stainless Steel Slip-Joint Hinges
- Lifting Eyes
- Fiberglass Vent Hood

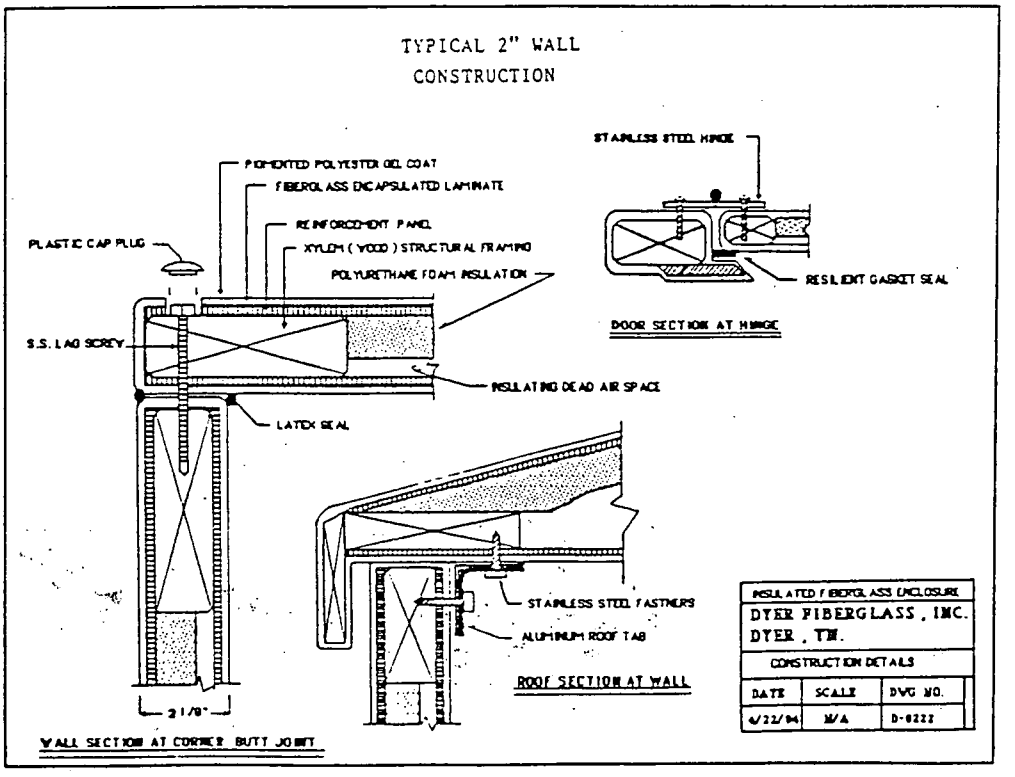

GENERAL SPECIFICATIONS: The enclosure shall be constructed of a durable xylem frame coated with rigid thixotropic resin and 30% glass chopped in 2" random pattern 3/32" to 3/16". Exterior finish to be white isophthalic polyester gel-coat .02" to .04" with ultra-violet inhibitors. The interior of the wall is insulated with 2 lb. density sprayed-on polyurethane foam ½" to 1½". Interior and exterior surfaces are reinforced with 3/32" to ⅛" chopped fiberglass. The interior of the enclosure shall be accessible by door(s) of the same composit construction as the walls and roof. Each door(s) shall have stainless steel hinges and shall have a locking type handle. Integral fiberglass flanges hold the roof to the walls and the walls to the floor. The enclosure shall be designed and constructed so that all side walls, doors and roof can be removed if required.

AVVIATORI DIRETTI M0BRF/...

DIRECT-ON-LINE STARTERS M0BRF/...

IPP118 - 3/92 - IT-IN

Lovato Electromechanics

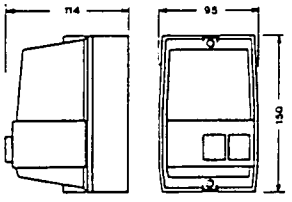

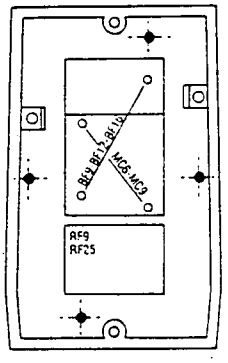

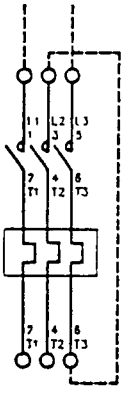

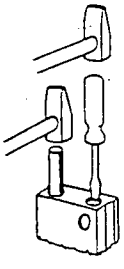

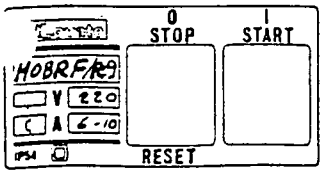

AVVIATORI DIRETTI M0BRF/...

Contenitore in materiale isolante IP54

VERSIONI E POTENZE DI IMPIEGO

La tabella seguente fornisce le versioni consigliate e le relative caratteristiche per varie grandezze di contattori.

DIRECT-ON-LINE STARTERS M0BRF/...

In pressed IP54 insulating material housing

VERSIONS AND UTILIZATION POWER

The following table indicates the recommended versions and the relative characteristics in the various contactor sizes.

VERSIONI *VERSIONS*	A	POTENZA D'IMPIEGO / *UTILIZATION POWER* 220V kW	380V kW	415V kW	440V kW	Durata elettrica *Electrical life*
M0BRF/R11	12	0,37-3	0,37-5,5	0,37-5,5	0,37-5,5	900.000
M0BRF/P11	12	0,37-3	0,37-5,5	0,37-5,5	0,37-5,5	900.000
M0BRF/PA11	12	0,37-3	0,37-5,5	0,37-5,5	0,37-5,5	900.000

SIGNIFICATO

...../R	Con ripristino
...../P	Con MARCIA e ARRESTO/RIPRISTINO
...../PA (1)	Con MARCIA e ARRESTO/RIPRISTINO

(1) In tale versione il pulsante MARCIA ha la posizione stabile (tale caratteristica è ottenuta montando l'accessorio G227); infatti dopo averlo premuto rimane agganciato e lo sgancio avviene premendo il pulsante di ARRESTO/RIPRISTINO.
Ciò consente di realizzare un comando a contatto permanente con fermo ed inserzione sul fronte; il comando di inserito è reso evidente dalla posizione assunta dal tasto di MARCIA.

SCHEMI
Gli avviatori, a seconda della versione devono essere cablati come indicato negli schemi 1, 2 e 3. I conduttori 2 e 3 sono parte del pulsante G244.

REFERENCE INDEX

...../R	*With reset*
...../P	*With START and STOP/RESET*
...../PA (1)	*With START and STOP/RESET*

(1) In this version, the START button has a latch position. This characteristic is obtained by mounting the G227 accessory.
In fact, after having pressed this button, it remains in this position and is released by pressing the STOP/RESET button.
This permits a permanent contact control with hold and connection on the front; the connected control is shown by the START button position.

WIRING DIAGRAMS
The starters are supplied already cabled as in diagram 1, 2 or 3 depending on the selected version; leads 2 and 3 are parts of the start button G244.

M0BRF/R

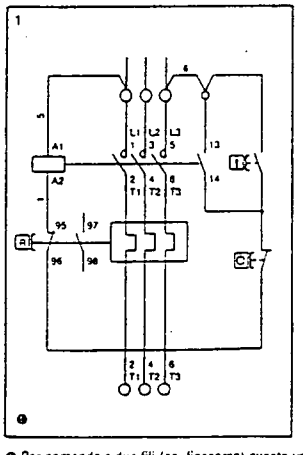

M0BRF/P

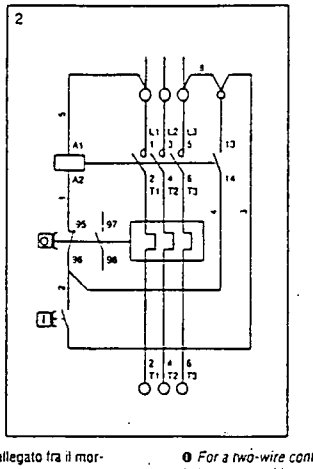

M0BRF/PA

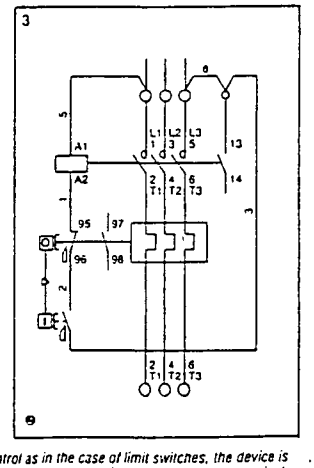

❶ Per comando a due fili (es. finecorsa) questo va collegato fra il morsetto 13 del contattore e il morsetto 96 del relè termico.

❷ Per il pilotaggio tramite il finecorsa od altro automatismo togliere il ponticello 6 e collegare l'automatismo fra i morsetti 5/L3 e 13 del contattore.

- Per circuito di comando con tensione diversa da quella di rete togliere i conduttori 5 e 6 ed allacciare la linea ausiliaria agli attacchi A1 e 13.
- Per circuito di comando tra fase e neutro e linea trifase togliere il conduttore 5 ed allacciare il neutro all'attacco A1.
- Nel caso di linea e motore monofase il circuito principale deve essere realizzato come indicato a lato.
- Nel caso non esistano nell'impianto adeguate protezioni è necessario montare a monte del protettore una adeguata terna di fusibili.

❶ For a two-wire control as in the case of limit switches, the device is to be connected between contactor terminal 13 and overload terminal 96.

❷ For the control by means of limit switches or other automa-tism remove connection 6 and connect the automatism between contactor terminals 5/L3 and 13.

- *For control circuits with a voltage other than the network value, remove leads 5 and 6 connect the auxiliary line to terminals A1 and 13.*
- *For control circuit between phase, neutral and three-phase line, remove lead 5 and connect neutral to terminal A1.*
- *In case of one-phase line and motor, the main circuit should be connected as in the side drawing.*
- *In the case when there are no suitable protections against short circuits in a system, it is advisable to connect a set of three adequate fuses upstream.*

ISTRUZIONI

INSTALLAZIONE

L'ingresso dei cavi può avvenire dall'alto, dal basso e dal piano posteriore; affinchè il grado di protezione rimanga invariato è necessario sfondare i soli diaframmi utilizzati e completare gli imbocchi filettati con pressacavi da 5/8 Gas.
NOTA. La rottura dei diaframmi se richiesta presenta una certa resistenza dovuta al materiale impiegato pertanto, per facilitare tale operazione è bene utilizzare un tubo in ferro avente diametro di poco inferiore al foro o, un robusto cacciavite agendo come indicato nella figura a lato.

COMPILAZIONE DATI DI TARGA

Ultimata l'installazione scrivere con un pennarello i dati di targa come esemplificato a lato

INSTRUCTIONS

INSTALLATION

The cables enter through the top, the bottom and even through the rear. To maintain the degree of protection, only the necessary diaphragms should be knocked out and the threaded lead-ins completed with 5/8 Gas cable glands.
NOTE. The knocking out of the diaphragms presents a certain resistance caused by the material used. Therefore, to simplify this operation, it is better to use an iron tube having a diameter a little smaller than the hole or a strong screw-driver and preceed in the manner indicated the side figures.

LABELLED DATA COMPLETION

When the installation is completed, write with a pen the labelled data as

ESECUZIONE DA ASSEMBLARE

Gli avviatori diretti in cassetta, con o senza relè termico, possono essere realizzati assemblando i singoli elementi.

INDIVIDUAL COMPONENT VERSION

Enclosed direct-on-line starters, with or without overload, relay can be assembled from individual components.

COMPONENTI DEI CONTENITORI

ENCLOSURE COMPONENTS

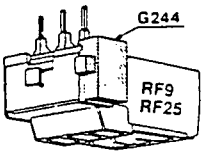

DESCRIZIONE / *DESCRIPTION*	QUANTITA' / *QUANTITY*		
	M0	M0R	M0P
Calotta senza pulsante *Cover without button*	1	-	-
Calotta con pulsante reset *Cover with reset button*	-	1	-
Calotta con pulsanti marcia e stop/reset *Cover with start and stop/reset buttons*	-	-	1
Base *Base*	1	1	1
Morsetto terra *Earth terminal*	1	1	1
Viti fissaggio contattore *Fixing screws for contactors*	2	2	2
Pulsante G244 *G244 button*	-	-	1
Passacavi *Cable glands*	3	3	2

TABELLA RIASSUNTIVA / *SUMMARY TABLE*
VERSIONI REALIZZATE DI SERIE / *SERIAL VERSIONS*

AVVIATORE DIRETTO *DOL STARTER*	= Contenitore *Housing*	+ Contattore *Contactor*	+ Relè termico *Overload relay*
M0BRF/R11	M0R	BF9.10	RF25
M0BRF/P11	M0P	BF9.10	RF25

ALTRE VERSIONI REALIZZABILI

Contattore +	Relè
MC6	RF9
MC9	RF9
BF12	BF12
BF16	BF16

OTHER VERSIONS TO BE ASSEMBLED

Contactor +	*Overload Relay*
MC6	RF9
MC9	RF9
BF12	BF12
BF16	BF16

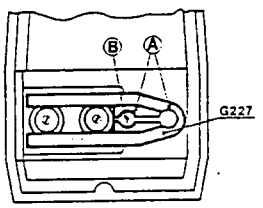

MONTAGGIO

- Il contattore si monta a vite.
- Il relè termico si fissa direttamente al contattore.
- Il pulsante G244 si monta a scatto sul fianco destro del relè termico come indicato in figura a lato.
- L'accessorio G227 che trasforma il pulsante di MARCIA in stabile va montato nella parte interna della calotta in corrispondenza dei tasti meccanici come indicato in figura. Dopo averlo innestato nei due riferimenti A va bloccato con la vite B che deve essere chiusa a fondo.

ASSEMBLY

- *The contactor is screw fixed.*
- *The thermal relay is directly fixed onto the contactor.*
- *The G244 push button is snapped onto the right side of the thermal relay as illustrated in the side figure.*
- *The G227 accessory which transforms the START button into a latching one is mounted on the cover correspondent to the mechanical button as shown in the figure. After having inserted the two reference A, it is to be locked by completely tightening of the screw B.*

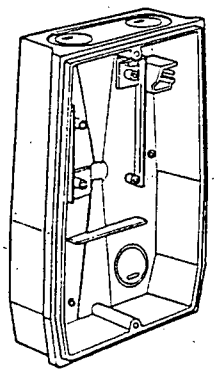

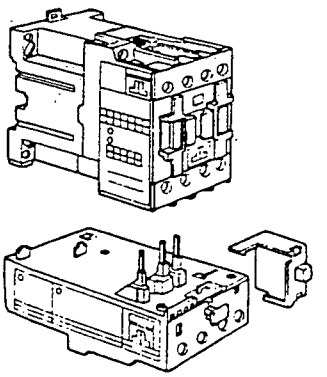

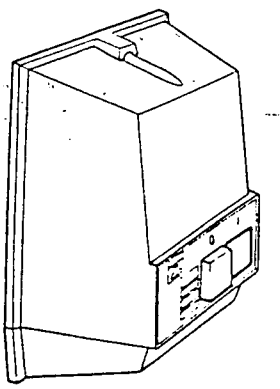

LOVATO S.P.A.
COMPONENTI E SISTEMI
PER AUTOMAZIONE

VIA DON E. MAZZA, 12
24020 GORLE (BERGAMO) ITALIA
TELEFONO 035/362020 (15 LINEE