Prepare in quintuplicate (original and 4 copies)

CONTRACTOR DRAWINGS & INFORMATION SUBMITTAL
NORTHNAVFACENGCOM 4335/3 (Rev. 6/80)

CONTROL NO. 11

CONTRACT NO.	DELIVERY ORDER	ACTIVITY LOCATION
N62472-94-D-0398	0055	Naval Weapons Station Earle, Colts Neck, NJ

PROJECT TITLE:
BIOSLURPER SYSTEM –SITE 16F

FROM:	DATE
Foster Wheeler Environmental Corp. - Program QCM: Mark Miller	March 7, 2001
TO:	DATE
S BEEBE (3-COPIES)	March 7, 2001

1. THE CONTRACTOR SUBMITTALS LISTED BELOW ARE FORWARDED FOR YOUR REVIEW AND RECOMMENDATIONS.
(a) APPLY APPROPRIATE STAMP IMPRINT TO EACH SUBMITTAL AND INDICATE REVIEW COMMENTS, AS REQUIRED.
(b) RETAIN ONE (1) COPY OF THIS TRANSMITTAL FORM AND RETURN REMAINING COPIES WITH REVIEWED SUBMITTALS TO ROICC.
2. THESE SUBMITTALS SHOULD BE RETURNED TO THIS OFFICE BY _____
3. _____

Mark Miller MARCH 7, 2001

COPY TO:

[X] ROICC **D Zari (1 copy)** [X] ENVIR. COORD **G Goepfert (2 copies)** [ ] NJDEP

SIGNATURE AND DATE

FROM: DESIGNER	DATE
TO: ROICC	DATE

1. THE SUBMITTALS LISTED BELOW HAVE BEEN REVIEWED AND ARE RETURNED, WITH ACTION TAKEN AS INDICATED.
2. _____

COPY TO:

[ ] ROICC [ ] DESIGNER

SIGNATURE AND DATE

FROM: ROICC	DATE
TO: CONTRACTOR	DATE

1. THE SUBMITTALS LISTED BELOW HAVE BEEN REVIEWED AND ARE APPROVED/DISAPPROVED AS SHOWN BELOW AND ON EACH STAMP IMPRINT.

COPY TO:
[ ] ROICC [ ] OTHER

FOR COMMANDING OFFICER, NORTHERN DIVISION NAVAL FACILITIES ENGINEERING COMMAND — DATE

ITEM NO.	SUBMITTAL DESCRIPTION	PREPARED/ SUBMITTED BY	APPROVED	DISAPPROVED	REMARKS
11	SD-08, Statements; Work Plan for Installation of Additional Recovery Wells (R1)	M. Miller			

WORK PLAN
FOR THE INSTALLATION OF
ADDITIONAL RECOVERY WELLS
AT THE
BIOSLURPING SYSTEM
AT
NAVAL WEAPONS STATION - EARLE
COLTS NECK, NEW JERSEY

Issued:

March 6, 2001

Prepared for:

Naval Facilities Engineering Command
10 Industrial Highway
Lester, PA 19113

Prepared by:

Foster Wheeler Environmental Corporation
2300 Lincoln Highway
One Oxford Valley - Suite 200
Langhorne, PA 19047 - 1829

REMEDIAL ACTION CONTRACT N62472-94-D-0398
DELIVERY ORDER NO. 0055

Revision	Date	Prepared By:	Approved By:	Pages Affected
0	March 6, 2001	M. Heffron, P.G.	J. Irey	N/A

CD97#7/97307

WORK PLAN
FOR THE INSTALLATION OF RECOVERY WELLS
AT THE
BIOSLURPING SYSTEM
AT
NAVAL WEAPONS STATION - EARLE
COLTS NECK, NEW JERSEY

TABLE OF CONTENTS

Section Page

1.0 INTRODUCTION---------- 1

2.0 PROJECT LOCATION AND DESCRIPTION----------2
2.1 Existing Bioslurper System Setup---------- 5

3.0 SCOPE OF WORK----------6
3.1 TASK 1 - PROJECT PLANNING/MANAGEMENT----------6
3.1.1 Subtask 1A - Pre-Construction Submittals---------- 6
3.1.2 Subtask 1B - Mobilization/Facilities---------- 6
3.1.3 Subtask 1C - Home Office Support----------7
3.2 TASK 2 - DRILLING AND INSTALLATION OF GROUNDWATER RECOVERY WELLS----------7
3.2.1 Subtask 2A - Well Permits/Dig Permits---------- 7
3.2.2 Subtask 2B - Drilling and Installation of Recovery Wells----------7
3.3 TASK 3 – TRENCHING AND PIPING INSTALLATION---------- 11
3.3.1 Subtask 1A – Surveying of Extraction Wells And Utility Lines----------12

4.0 HEALTH AND SAFETY REQUIREMENTS----------12

5.0 WASTE REMOVAL/REGULATORY COMPLIANCE---------- 12
5.1 GROUNDWATER----------14
5.2 INVESTIGATION DERIVED WASTES---------- 14
5.3 MANIFESTS/SHIPPING PAPERS---------- 14
5.4 WASTE TRANSPORT AND DISPOSAL----------14

6.0 PROJECT MANAGEMENT----------14
6.1 PROJECT SCHEDULE----------14
6.2 PROJECT STAFFING PLAN----------14

7.0 QUALITY ASSURANCE/QUALITY CONTROL----------17
7.1 ORGANIZATION AND RESPONSIBILITIES----------17

TABLE OF CONTENTS
(Continued)

7.2 PROBLEM OR WORK DEFICIENCY MEETINGS---------- 17
7.3 SUBMITTALS---------- 17
7.4 CHANGES---------- 17
7.5 DOCUMENTATION----------18
7.5.1 Operations and Record Keeping---------- 18
7.5.2 Photographic Documentation---------- 18

LIST OF FIGURES

2-1 Site Location Map----------2
2-2 Recovery Well / System Layout----------3
3-1 New Recovery Well / System Layout---------- 9
3-2 Recovery Well Construction Sketch---------- 10
3-3 Recovery Well Connection Details---------- 13
6-1 Schedule---------- 15
6-2 Organization Chart---------- 16

APPENDICES

Appendix A: Calculations

1.0 INTRODUCTION

Foster Wheeler Environmental Corporation (Foster Wheeler Environmental) has been contracted by the Northern Division, Naval Facilities Engineering Command (Northern Division) to construct, and install five additional product recovery wells at the existing bioslurping systems located at the Naval Weapons Station (NWS) Earle in Colts Neck, NJ. The five product recovery wells shall be installed around the Building C-16 to increase the recovery of product from this area of the diesel fuel plume. The wells shall be connected, via below-grade piping, to the existing piping network associated with Bioslurper Unit No. 1. This Work Plan is being submitted to satisfy the pre-construction submittal requirements included in paragraph 1.2.1, Pre- and Post-Construction Documentation of the Statement of Services for Delivery Order No. 0055, Modification No. 7 under Remedial Action Contract No. N62472-94-D-0398.

Bioslurping is an innovative remedial technology, which utilizes vacuum-enhanced dewatering technology to remediate petroleum hydrocarbon contaminated sites. Bioslurping systems are designed to recover light non-aqueous phase liquids (LNAPLs) via vacuum enhanced pumping while simultaneously performing remediation of the vadose zone via bioventing. Therefore, bioslurping simultaneously accomplishes source removal and remediation of the vadose zone. The bioslurper system withdraws free product, small volumes of groundwater and soil gas in the same process stream using a single pump. Free product is recovered while groundwater and soil gas are treated (when required) and discharged.

Bioslurping enhances free product recovery by creating a pressure gradient to force movement of LNAPL into the well. The system operates with minimal fluid drawdown in the aquifer, thereby reducing problems associated with LNAPL smearing and entrapment. Bioventing of the vadose zone is achieved by withdrawing soil gas in the recovery well. The system alternates between withdrawing product (and small amounts of groundwater) and soil gas. The rate of soil gas extraction is dependent on the rate of LNAPL recovery. The slurping action also greatly reduces the amount of groundwater discharge when compared to conventional dual-phase extraction systems.

2.0 PROJECT LOCATION AND DESCRIPTION

NWS Earle is located in east-central Monmouth County in the town of Colts Neck, NJ, as depicted in Figure 2-1. Site 16/F is located in the north-central portion of NWS Earle as shown in Figure 2-2. The areas currently being addressed with the bioslurping remediation system at Site 16/F are the light non-aqueous phase (LNAPL) plume southeast of Building C-16, The suspected LNAPL plume northwest of Building C-50, and a former gas station site near Building C-17.

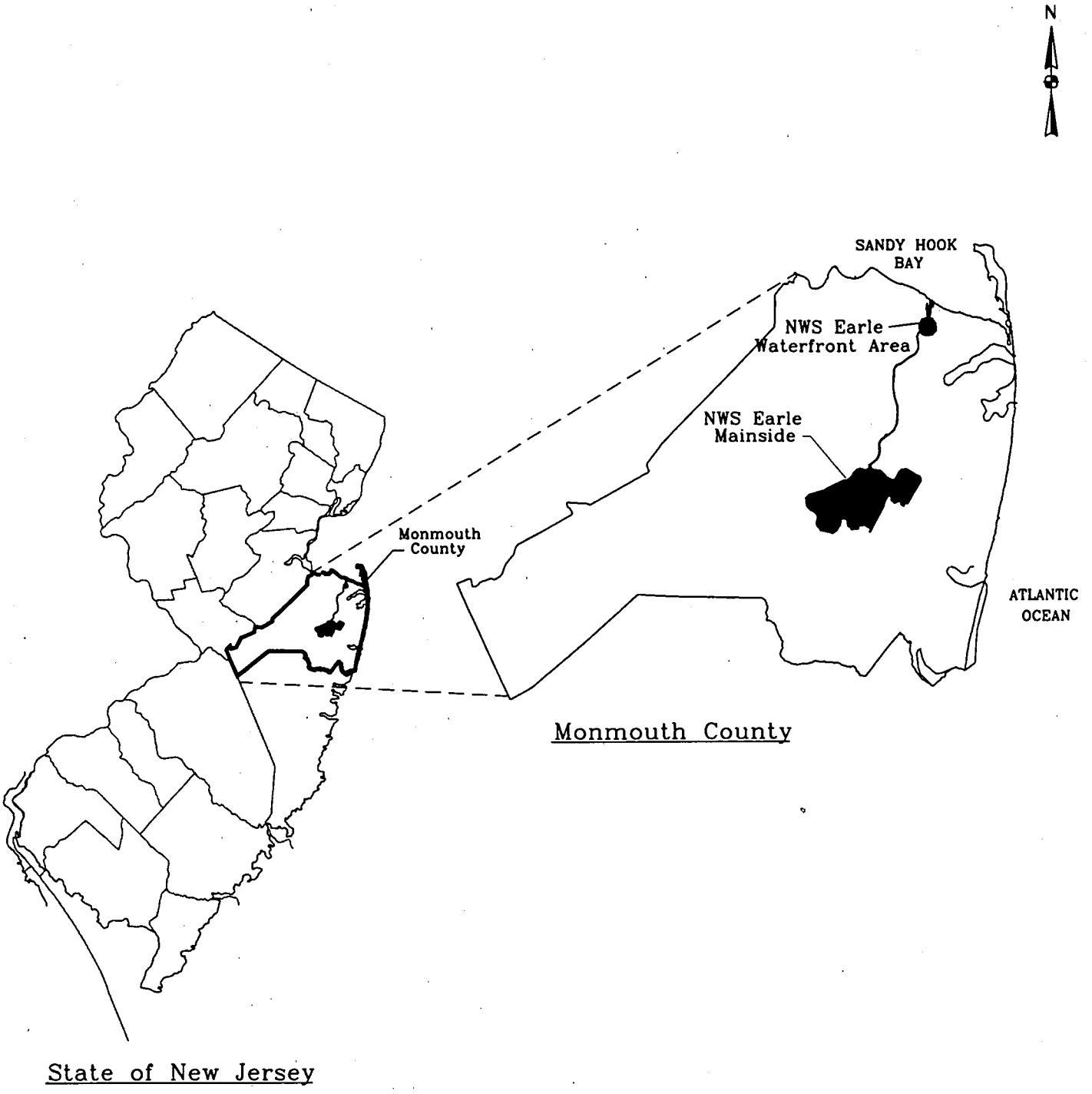

NOT TO SCALE

U.S. Navy RAC
NWS–Earle, Colts Neck, N.J.

Figure 2–1
Regional Site Map

FOSTER WHEELER ENVIRONMENTAL CORPORATION

earle\county

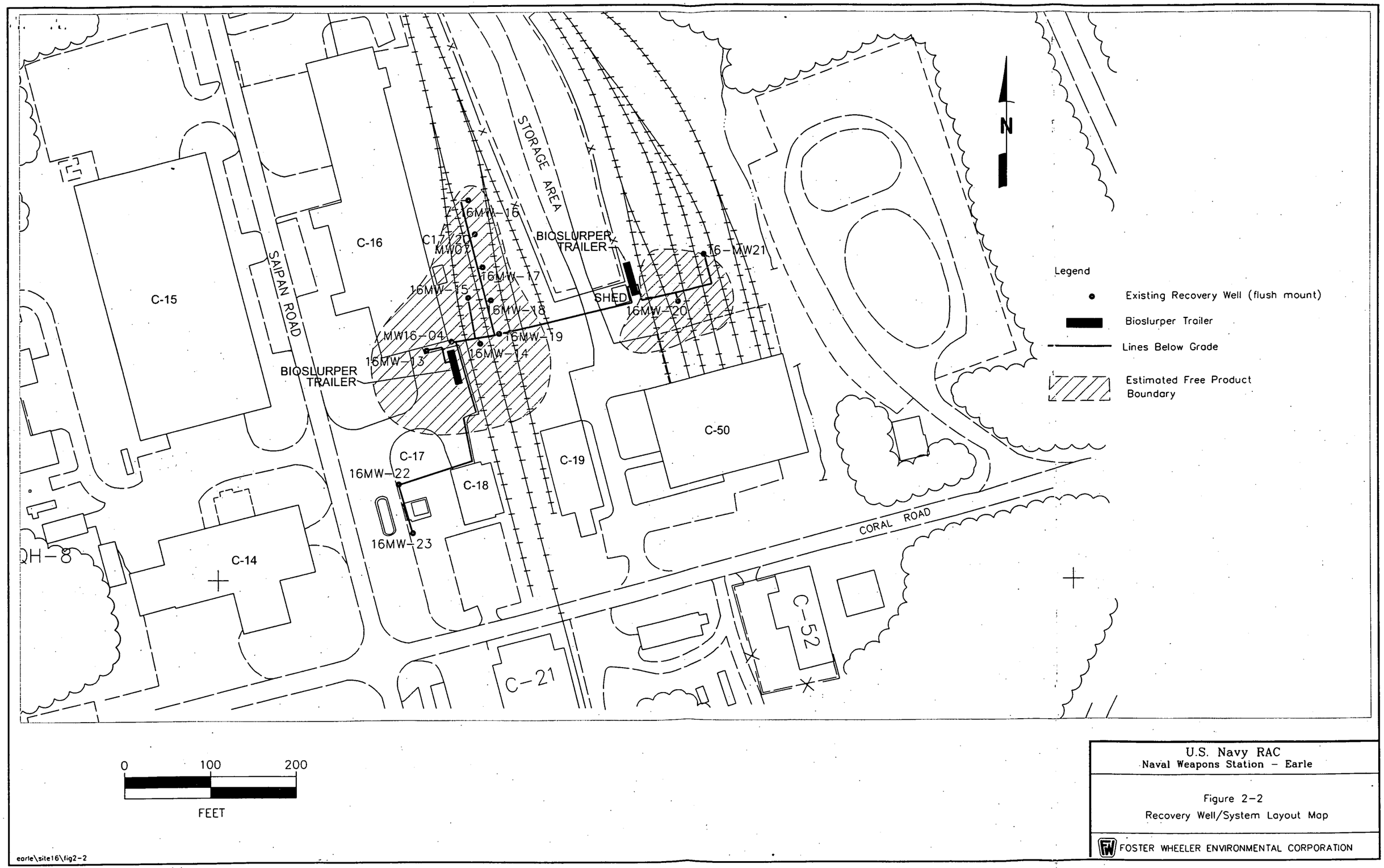

U.S. Navy RAC
Naval Weapons Station – Earle

Figure 2-2
Recovery Well/System Layout Map

FOSTER WHEELER ENVIRONMENTAL CORPORATION

earle\site16\fig2-2

An underground fuel line located in the area north of Building C-19 was used to transport diesel fuel from an UST located at the northwestern corner of Building C-18 to a dispensing station near Building C-50. A leak in the fuel line was discovered in 1977 and use of the pipeline was discontinued after the leak was discovered and excavated. Part of the former underground diesel transfer line is still in place.

A site investigation was conducted in 1992. As part of this investigation, five soil borings were completed in the area north of Building C-18, the reported location of the underground fuel line leak. Each boring was completed to the water table, and one sample was collected approximately 8 feet below ground surface (bgs), below the level of the fuel pipeline and above the water table. All soil samples collected contained elevated levels of TPH ranging from 4,700 mg/kg to 22,000 mg/kg. Low levels of semi-volatiles were also detected. A geophysical survey of the area indicated a number of buried lines at the site; however, the exact location of the leaking fuel line was not determined.

Between June and October of 1995, Brown & Root Environmental conducted the following activities at Site 16/F:

- Soil gas survey
- Sampling and analysis of subsurface samples from 20 soil borings
- Sampling and analysis of surface soil
- Sampling and analysis of sediment
- Drilling and installation of six shallow permanent monitoring wells
- Sampling and analysis of groundwater from the wells
- Measurement of static-water levels in the wells
- Performance of slug testing in three of the wells

The Remedial Investigation Report prepared by Brown & Root Environmental subsequent to the 1995 field investigation concluded that hydrocarbons detected in the subsurface have impacted the groundwater. The groundwater contamination (primarily volatile organics and fuel constituents) is associated with a free-product LNAPL layer. This floating product is a source of organics to groundwater. In addition, there is a potential for residual leaching of aromatic volatiles and the lighter PAHs from subsurface soils into groundwater because of the significant concentrations present. Underground storage tanks (USTs) and/or piping leaks have occurred at the NWS Earle supply gasoline station (Building C-17). The piping was replaced in 1995. The USTs are known to have stored diesel fuel and unleaded gasoline. Gauging activities conducted during the 1995 Remedial Investigation indicate an "apparent" thickness of up to 2 feet of product in monitoring well MW16-04, and up to 8 inches in monitoring well MW16-05. Free product was not detected in any of the other monitoring wells installed across the site.

In 1995 the Navy conducted a SCAPS Investigation to delineated the extent of petroleum-impacted soils across the site. The SCAPS is a field screening technique, which uses Laser Induced Fluorescence (LIF) to detect polynuclear aromatic hydrocarbons (PAHs). A subsequent SCAPS Investigation was conducted in the area north of Building C-50 to further investigate

possible petroleum impacted soils from diesel dispensing operations. In October 1996, B&R Environmental conducted direct push sampling, a cone penetrometer stratigraphy study, an induced fluorescence investigation of petroleum impacted soils, and installed four shallow monitoring wells. Figure 2-2 depicts the delineated extent of the fuel impacted areas based on the SCAPS study and existing well data.

Foster Wheeler Environmental conducted a bioslurper pilot study from July 22 to October 25, 1996 to determine if bioslurping was technically feasible for product recovery at the NWS-Earle. An existing monitoring well (MW-16-04) was used to recover product during the pilot study.

2.1 EXISTING BIOSLURPER SYSTEM SET-UP

The existing bioslurper system consists of two turnkey cargo boxes containing the bioslurper vacuum pumps and groundwater treatment units. The two 40 foot (L) by 8.5 foot (H) by 8 foot (W) treatment buildings (refurbished cargo containers) were delivered to the site with all the bioslurping and groundwater treatment equipment mounted, plumbed and wired internally to NEMA 7 (explosion-proof) standards. The complete turnkey system only needed to be connected to a power source, telephone line, water, and the wells upon arrival. The bioslurper units consist of the following components:

Exhauster Skid

- The exhauster skid functions as the source of the vacuum which is placed on the recovery wells, and also functions as a vapor phase drop-out tank and is equipped with a vapor phase discharge line. The exhauster skid is connected to the Free Product Skid via a 3 inch diameter vacuum line and a 0.5 inch manual blowdown line.

Free Product Skid

The free product skid is equipped with a tank to drop out the oil and water phase of the air/water/oil mixture that is pulled, via a vacuum, from the recovery wells. The vacuum to the wells is controlled at this location by an air bleed valve and measured with a vacuum gauge. The oil and water in this tank is transferred via a pump to the oil/water separator skid. The main components of the free product skid are the drop out tank and the cavitation pump connected to the oil/water separator.

Oil/Water Separator Skid

The oil/water separator is equipped with an oversized parallel corrugated plate coalescing oil/water separator and a product transfer pump. The oil/water separator has a 200 gallon integral sump and 100 gallon product storage compartment. The oil water separator is also connected to a 275-gallon double-walled product storage tank.

Effluent Treatment Skid

- The effluent treatment skid is used to treat the effluent from the oil/water separator. The treatment system consists of a bag filter, clay absorption units and activated carbon absorption units.

Automated Instrumentation

The two bioslurper systems are equipped with numerous interlocked switches and alarms to ensure that if one part of the system is not functioning properly, the system automatically shuts down and beeper and faxed alarm reports are sent out to Foster Wheeler and the Navy. The control panel consists a Program Logic Control (PLC) based master control panel and telemonitoring/datalogging system.

3.0 SCOPE OF WORK

3.1 TASK 1 - PROJECT PLANNING/MANAGEMENT

Project Planning/Management activities include the preparation of pre-construction submittals, mobilization to the site, installing the recovery wells, and connectting the wells to the existing piping network tied into Bioslurper Unit No.1. The subtasks involved in Project Planning/Management are described below.

3.1.1 Subtask 1A - Pre-Construction Submittals

Foster Wheeler Environmental will prepare and submit the following pre-construction documents to the Navy:

Work Plan
The Work Plan presents Foster Wheeler Environmental's approach to executing the project, including the site description, statement of work, procurement approach, system information, materials, engineering data, transportation and disposal data, and sampling and analytical requirements.

Health and Safety Plan (HASP)
The HASP includes Foster Wheeler Environmental's approach to providing for the health and safety of its employees during the project.

3.1.2 Subtask 1B - Mobilization/Facilities

Mobilization will consist of contacting appropriate Navy personnel at NWS Earle to arrange for contractor passes and to coordinate support requirements for the well drilling and the piping installation for the bioslurping systems

3.1.3 Subtask 1C - Home Office Support

Foster Wheeler Environmental will provide home office support for the project duration. Home office support includes the preparation of the required monthly progress, financial, and technical reports.

3.2 TASK 2 - DRILLING AND INSTALLATION OF GROUNDWATER RECOVERY WELLS

3.2.1 Subtask 2A- Well Permits/Dig Permits

The proper well permits shall be obtained from the New Jersey Department of Environmental Protection (NJDEP) prior to drilling the recovery wells.

FWENC shall contact the NWS-Earle Public Works Department to obtain a dig permit and have all utilities marked-out prior to drilling and excavation for piping installation.

3.2.2 Subtask 2B- Drilling and Installation of Recovery Wells

A total of five (5) additional recovery wells will be installed in the area adjacent to Bioslurper Unit No. 1. The location of the recovery wells is based upon a review of the existing operational data from the existing bioslurper recovery wells.

The additional recovery wells are being installed in the area around Bioslurper Unit No. 1 in order to increase the product recovery in this area and reduce the time needed to remediate the diesel fuel plume. The additional wells provide additional coverage of the existing diesel fuel plume, and therefore increase the recovery of the diesel fuel.

During the pilot study, a vacuum of 7 inches of mercury (in. Hg) placed on extraction well 16MW-04 resulted in vacuum readings in the soil gas monitoring wells up to 40-feet from the extraction well. Only low vacuum readings (0.07 to 0.1 inches of water (in. H_2O)) were detected in the soil gas monitoring point located 40-feet from the well. During and after the pilot study, it was determined that the optimal vacuum of the extraction well should be between 3 to 5 in. Hg. This was based on the observation of water recovered per well along with the LNAPL. By keeping the vacuum of the extraction well to 5 in/Hg and below, the gallons per minute (gpm) of water recovered from the well could be kept below 2 gpm. The existing recovery wells were installed at intervals of 35 to 40 feet apart, based on a radius of influence of approximately 25 feet for each recovery well (at lower vacuums). The existing well layout actually has an overlap of the radii of influence of the extraction wells.

In order to verify the radius of influence of some of the existing extraction wells at NWS-Earle, vacuum measurements were obtained from select wells. Low vacuum reading were obtained from 16MW19 (1-2 inches of water) and 16MW-18 (0.4 inches of water) when a vacuum of approximately 5 inches of Hg was applied to 16 MW-14. Only 16MW-14 was under vacuum at the time the measurements were taken. 16MW-19 is approximately 30 feet to the northwest of 16MW-14, and 16 MW-18 is approximately 60 feet northwest. Low vacuum readings were also obtained from C17/20MW-07 (1-2 inches of water) when 16MW-15 was operating at a vacuum of 4 inches of Hg.

Based on the assumed perimeter of the LNAPL plume, and the radius of influence of the extraction wells, the additional wells will be installed to the south and the northwest of the existing well network near Building C-16. Figure 3-1 depicts the proposed locations of the additional recovery wells. No wells are proposed for inside Building C-16 at this time since this building is scheduled for demolition this year.

The groundwater wells shall be installed using a hollow stem auger drilling rig to advance 6¼ inch inside diameter augers to a depth of approximately 15 feet below grade. The depth is based on previous groundwater elevations in the existing wells. Continuous split spoon samples shall be collected to log the geology. The drilling and well installation shall be supervised by a Geologist, and boring logs and construction diagrams shall be prepared for each well.

Construction details for the groundwater/product recovery wells are shown in Figure 3-2. The wells will be installed in accordance with the following procedure:

1. The depth of the groundwater wells shall be approximately 15 feet below grade, and the wells shall be installed to allow conversion from a product/groundwater recovery well into a bioventing well. The wells will be installed so that approximately 4 to 5 feet of the screen is in the vadose zone, above the top of the water table.
2. Drilling shall be performed with hollow stem auger (HSA) drilling techniques. A nominal 8-inch diameter shall be advanced in order to install the recovery wells.
3. During the drilling operations, a 2-inch OD split barrel sampler shall be driven with blows from a 140 pound hammer falling 30 inches in accordance with ASTM D1586-84, Standard Penetration Test.
4. Ten feet of 4-inch diameter PVC well screen with 0.01 inch slot size shall be set at the bottom of the borehole with sufficient riser pipe to extend to ground surface.
5. The annular space shall be backfilled from the bottom of the well to 1 foot above the screen with clean, uniform, medium-grained sand (Morie #1). A 2-foot bentonite seal shall be placed on the sand and allowed to hydrate. The remaining annular space shall be backfilled with bentonite-cement grout
6. A steel vault shall be placed around the well to allow for the necessary space needed to connect the well to the bioslurper system and be capable of locking for security.

0 100 200
FEET

U.S. Navy RAC
Naval Weapons Station – Earle

Figure 3-1
Site 16 Bioslurper System
New Recovery Well/System Layout

FOSTER WHEELER ENVIRONMENTAL CORPORATION

o:\navyrac\earle\site16\3-1.dwg

FOSTER WHEELER ENVIRONMENTAL CORPORATION

CONSTRUCTION SKETCH
RECOVERY WELL

PROJECT _____

JOB NO. _____

DRILLING SUBCONTRACTOR _____

DRILLER _____

DRILLING METHOD _____

WELL NO. _____

DATE OF WELL INSTALLATION _____

DATE OF WELL DEVELOPMENT _____

GEOLOGIST _____

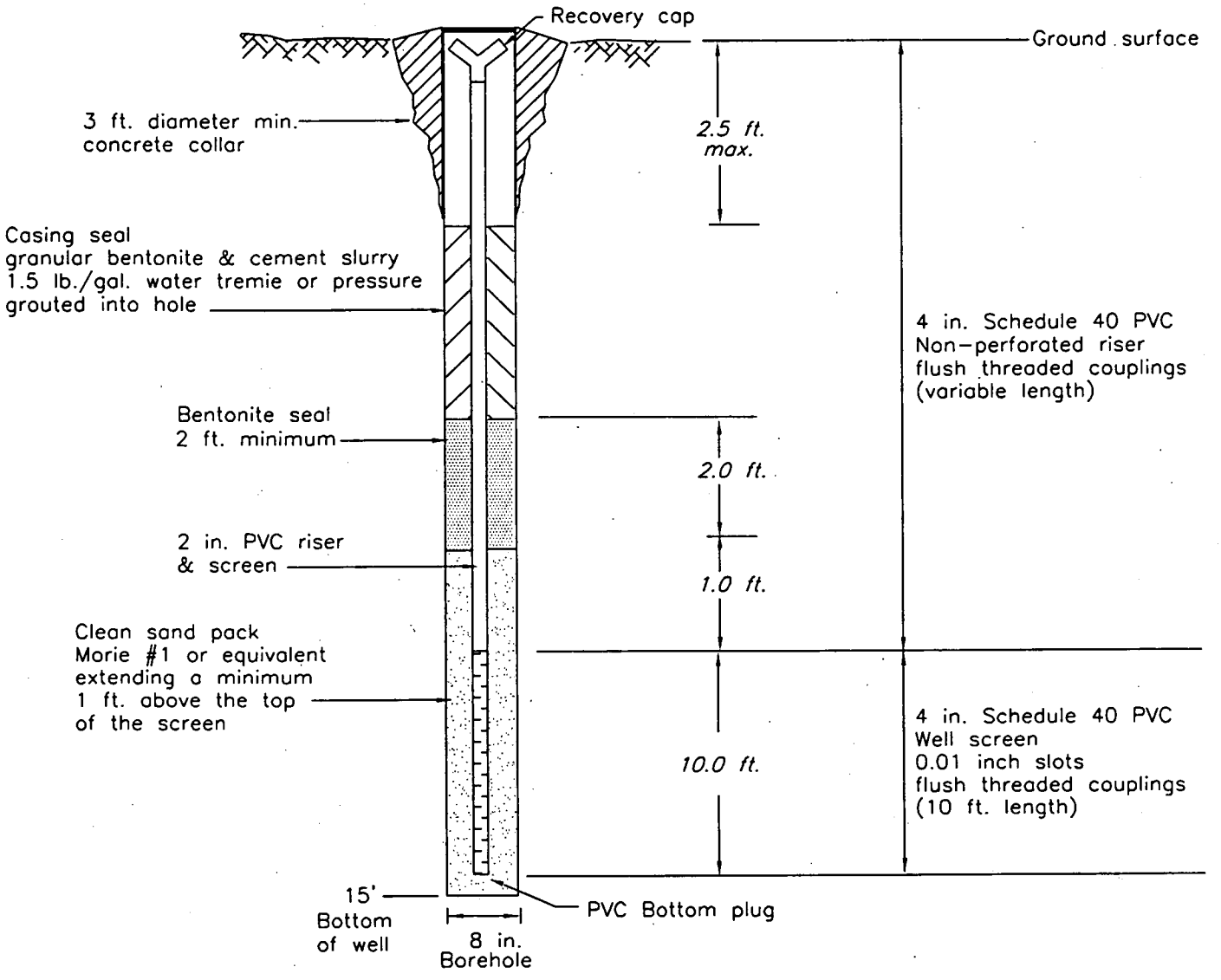

U.S. Navy RAC
Naval Weapons Station - Earle

Figure 3-2
Recovery Well Construction Sketch

FOSTER WHEELER ENVIRONMENTAL CORPORATION

navyrac\earle\earle_rw.dwg

The monitoring wells shall be installed with 10 feet of screen in order to ensure coverage across the vadose zone during water level fluctuations and ensure sufficient screened intervals in the vadose zone for conversion of the wells to bioventing wells at a later date.

All drill cuttings shall be containerized in 55-gallon drums, labeled, and staged for off-site disposal. The soil cuttings shall be sampled and analyzed for off-site disposal detailed in the Sampling and Analysis Plan.

The groundwater wells shall be developed to remove sediments and drill cuttings from the around the screened interval of the well. Wells shall be developed by bailing, or pumping, surging the water to ensure all the fines in the well are removed. Wells shall be developed until water removed is visibly clear of suspended solids. The development water shall be containerized in 55-gallon drums and labeled, allowed to settle, and then run through the groundwater treatment system of the bioslurper, or disposed off site.

3.3 TASK 3: TRENCHING AND PIPE INSTALLATION

With the exception of connections to the bioslurper units and Building C-16, all the piping for the extraction wells, wastewater discharge lines and water supply lines shall be buried below grade. The top of all underground piping shall be buried a minimum of 2 feet below grade. Two foot wide trenches shall be excavated with a backhoe to approximately 3 feet below grade, keeping the trenches as vertical as possible. A minimum of six inches of clean sand shall be backfilled into the trench for bedding. The bedding in the bottom of the trenches shall be graded in order to provide uniform bedding and support for each section of conduit or pipe. Clean sand shall be backfilled in 6-inch maximum lifts to 12 inches above the top of the pipe. Care shall be taken to ensure that the initial sand is tampered firmly under the pipe haunches. A hand operated, plate-type, vibratory or other suitable hand tampering device shall be used to compact each 6-inch loose lift of sand or soil. The soils shall be compacted to 90 percent of the maximum relative density. Detectable metallic piping tape shall be placed above the length of the pipe to properly mark the piping runs. Existing excavated material shall be used to backfill the remainder of the trench.

All soils excavated from the trenches that are not used as backfill shall be placed into lined, and covered roll-off containers at the site. The soils shall be sampled, analyzed and disposed off site, upon completion of the trench excavations.

There are piping runs below grade that shall require cutting through concrete and asphalt. A concrete cutting saw shall be used to cut through the concrete and asphalt. Any excavated concrete and asphalt shall be placed in covered roll-off containers for off-site disposal. The asphalt shall be replaced with 3-inches of topcoat. All of the vacuum extraction piping buried below grade shall be comprised of 2-inch diameter sch 40 PVC contained inside 4 inch diameter sch. 80 PVC or the equivalent. The calculations for live load weights on the 4 inch diameter sch. 80 PVC pipe are contained in Appendix A.

A total of five trenches shall be excavated in order to connect the new wells to the existing piping network. One trench shall be excavated from 16MW14, between the railroad tracks, south to the new well. A second trench shall be excavated from 16MW04 north, along Building C-16, to the new well. A third trench shall be excavated from 16MW13, south to a proposed well. The fourth trench shall be excavated perpendicular to the third trench to tie in another well. The fifth trench shall be excavated perpendicular to the third trench to tie in the last well. The piping in the new trenches shall be slope back to the existing leak detection access ports for the secondary containment piping. No railroad work is required to complete these lines. However, all work near the tracks will be coordinated with Mike Perry, NWS-Earle's Railroad Engineer.

The tops of the extraction wells shall be configured with Y pipes to facilitate the slurper straw, a vacuum gauge, and a measurement/ sampling port. See Figure 3-3 for details. The wells shall be equipped in a manner that shall allow individual adjustments of vacuum on each well. The top of the well shall be configured with a compression cap to allow the movement of the slurper straw to various depths, based upon product depth and thickness. A 2-inch diameter manifold pipe, constructed of schedule 40 PVC, shall be run from the bioslurper units to the recovery wells. The 2-inch diameter pipe shall be contained in a 4-inch diameter schedule 80 PVC pipe for secondary containment.

The wells shall be installed in a flush-mount vault box. The locking vault box shall be cemented into the ground and will provide protection and security to the well and allow enough space to configure the attachments for the recovery system.

3.3.1 Subtask 3G-Surveying of Extraction Well and Utility Lines

All of the new extraction wells and the piping runs shall be surveyed by a certified surveyor using New Jersey State Plane Coordinate System. Vertical elevations, as well at latitude and longitude, shall be obtained for the extraction wells and the three existing vapor monitoring wells. The vertical elevations shall be obtained from the tops of the PVC casing..

4.0 HEALTH AND SAFETY REQUIREMENTS

The site-specific Health and Safety Plan (HASP) is provided as a separate submittal. As required by paragraph 1.2.1, Pre- and Post-Construction documentation, the HASP includes organizational information, a potential hazards assessment, protective equipment requirements, air monitoring, site controls and protective zones, medical surveillance procedures, emergency response and spill control measures, and training requirements.

5.0 WASTE REMOVAL/REGULATORY COMPLIANCE

This section addresses how the various waste streams generated during the bioslurping pilot study activities will be handled. These waste streams include air emissions, groundwater, recovered free product, and investigation derived wastes.

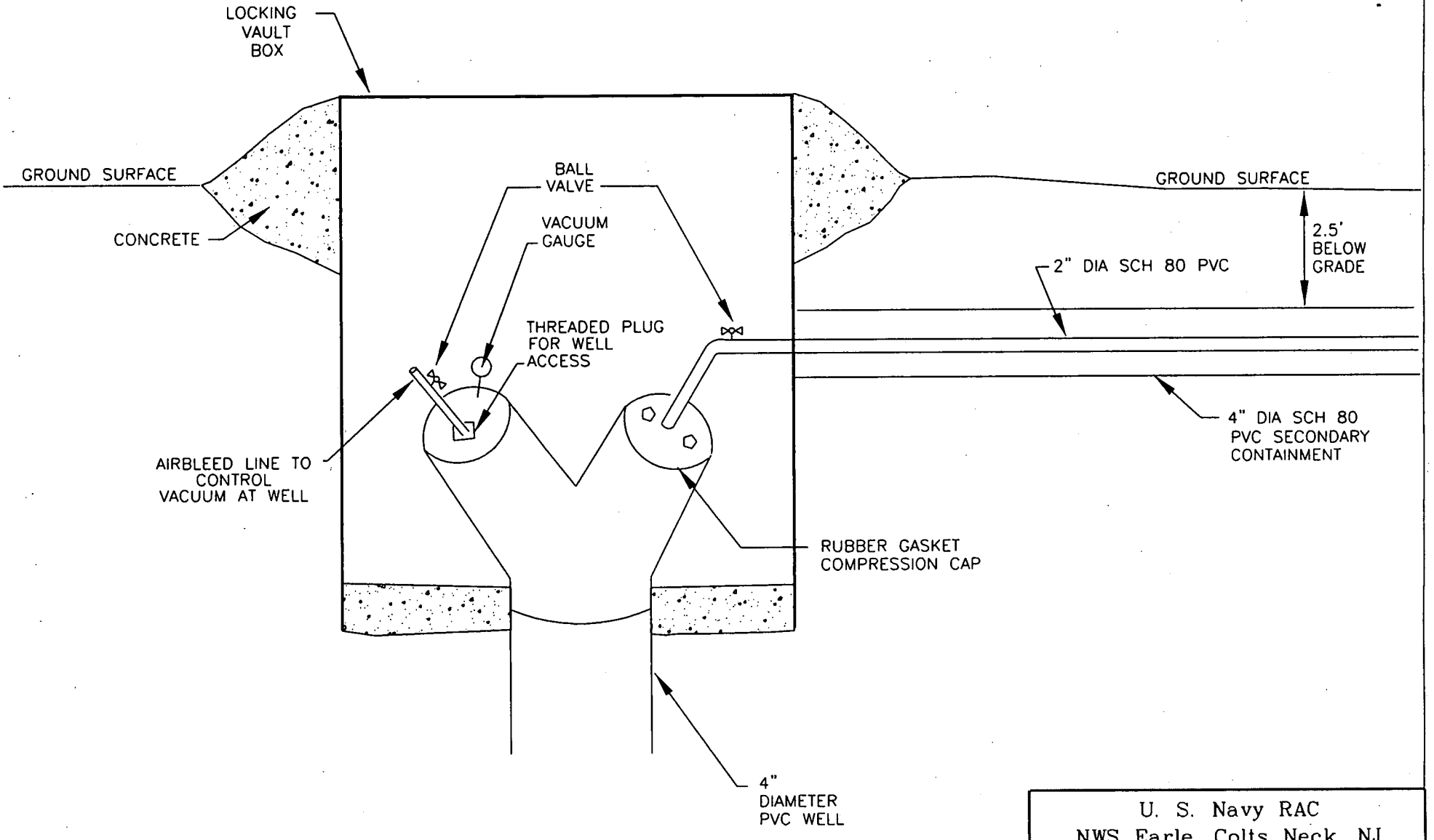

U. S. Navy RAC
NWS Earle, Colts Neck, NJ

Figure 3-3

Recovery Well Connection Details

FOSTER WHEELER ENVIRONMENTAL CORPORATION

navyrac\earle\earlerw

5.1 GROUNDWATER

Any groundwater generated from the installation and development of the wells shall either be characterized and disposed off site at a regulated facility, or run through the treatment units associated with the bioslurper units.

5.2 INVESTIGATION DERIVED WASTES

As part of the bioslurping pilot study, several investigation derived waste streams will be generated. These include soil cuttings, decontamination fluids, PPE, and other miscellaneous debris. These wastes shall be collected, stored separately and tested to determine waste characteristics for purposes of waste classification and disposal facility selection. Depending upon classification, investigation derived wastes will be disposed of in accordance with NJDEP solid waste and/or Hazardous Waste Regulations.

5.3 MANIFESTS/SHIPPING PAPERS

Foster Wheeler Environmental shall provide completed waste manifests and/or bills of lading and transport documentation to the Navy for review and signature.

5.4 WASTE TRANSPORT AND DISPOSAL

Foster Wheeler Environmental shall subcontract the waste transport and disposal (T&D) services. The T&D subcontractor shall be competitively procured from the five firms with which Foster Wheeler Environmental has pre-placed basic ordering agreements. This assures the Navy that solid and/or hazardous wastes will be sent to an EPA/NJDEP-approved facilities. All disposal facilities transporters both hazardous and solid waste, to be used for disposal of the Navy's wastes, will be evaluated for regulatory compliance and approved for use in accordance with Foster Wheeler Corporation Regulatory Compliance Procedures. Approved facilities and transporters will be submitted to the Navy for final approval.

6.0 PROJECT MANAGEMENT

The project management team shall be responsible for all technical and administrative aspects of the remediation project.

6.1 PROJECT SCHEDULE

The project schedule is provided as Figure 6-1.

6.2 PROJECT STAFFING PLAN

The organization chart for this project is provided in Figure 6-2.

Activity ID	Description	Early Start	Early Finish	%
1000	Complete Work Plan	01MAR01 A	07MAR01 A	100
1010	Obtain approval of well locations	09MAR01 A	09MAR01 A	100
1020	Drill Recovery Wells	14MAR01 A	21MAR01 A	100
1030	Remove asphalt/concrete for wells	16MAR01 A	16MAR01 A	100
1050	Install vaults/sumps	19MAR01 A	26MAR01 A	100
1060	Cut and Remove asphalt/concrete	26MAR01 A	29MAR01 A	100
1070	Install Double-Walled Piping	30MAR01 A	06APR01 A	100
1080	Site Restoration	09APR01 A	10APR01 A	100
1090	Soil Load-out	11APR01 A	12APR01 A	100
1100	Survey Wells and Lines	16APR01 A	17APR01 A	100
1110	Submit As-Built Reports	03MAY01 A	10MAY01 A	100

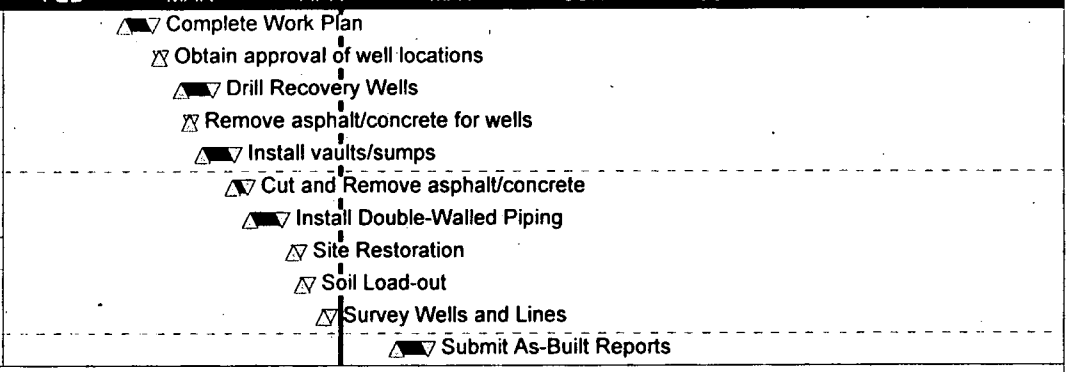

FIGURE 6-1
NAVAL WEAPONS STATION-EARLE
SCHEDULE FOR
BIOSLURPER WELL INSTALLATION

Figure 6-1
Navy / FWENC Organization Chart

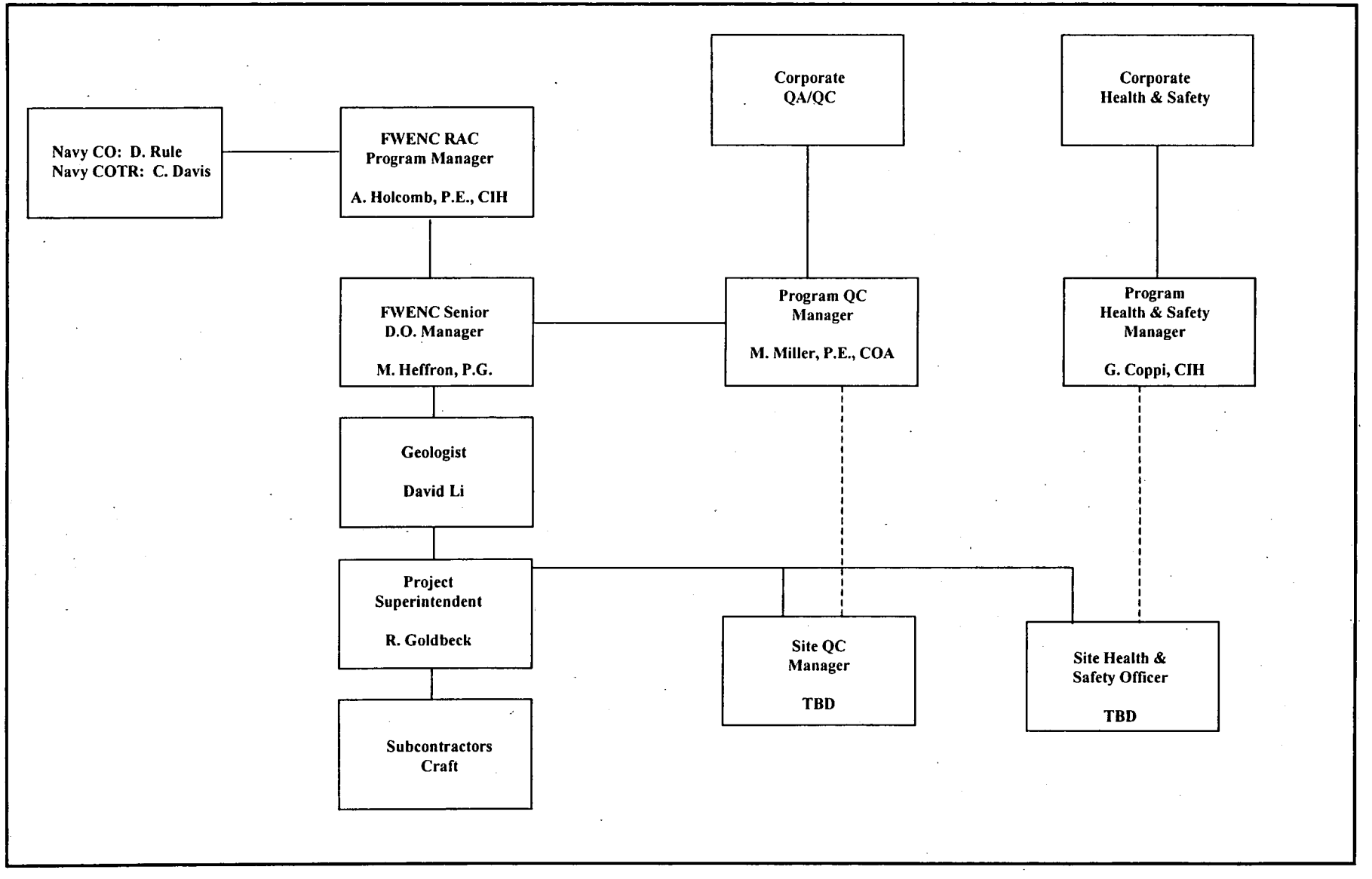

7.0 QUALITY ASSURANCE/QUALITY CONTROL

This Quality Assurance/Quality Control (QA/QC) section describes the organization, inspections, tests, procedures, and documentation necessary to produce a completed project which complies with the governing regulations and the technical statement of work.

7.1 ORGANIZATION AND RESPONSIBILITIES

QA/QC duties are the responsibility of the Senior Project Engineer/Manager (SPEM). He will employ physical inspections, direct measurement, and confirmatory laboratory testing to verify that work is being performed in accordance with the project plans. All subcontractors will conform to and participate in the program described herein as part of a unified team.

Foster Wheeler Environmental will direct and maintain responsibility for the overall QA/QC program and will manage subcontractors in a manner to maintain project requirements. Subcontractors will be used for drilling, laboratory analysis, waste disposal, and delivery/setup of the bioslurper unit.

7.2 PROBLEM OR WORK DEFICIENCY MEETINGS

If a major problem or deficiency occurs or is likely to occur, a special meeting to address related issues will be held. The meeting may be attended by the SPEM, Navy Representative(s) and others, as required. Meetings may be conducted at NWS Earle, NORDIV, or by teleconference. The purpose of the meeting will be to define and resolve potential problems or work deficiencies in the following manner:

- Define and discuss the problem or deficiency
- Review alternative solutions, including their effects on schedule and budget
- Implement plan to resolve the problem or deficiency

7.3 SUBMITTALS

The Quality Control Manager is responsible for maintaining the submittal register and reviewing and certifying that submittals are in compliance with the contract requirements. All submittals will be accompanied by a transmittal form that will identify the submittal and provide a unique tracking number.

7.4 CHANGES

If circumstances develop during the project that make it necessary or advisable to revise the Work Plan in order to accomplish project objectives, a Change Request Form (CRF) will be forwarded to the Navy for approval. Events such as a change in the site conditions or system

performance may result in a CRF. Changes may be discussed with the Navy Design Manager telephonically and followed up with a CRF to avoid negative impacts on the project budget.

7.5 DOCUMENTATION

Documentation of operations recordkeeping, photographic evidence or work performed, and as-built drawings will be provided to the Navy in the Evaluation Report.

7.5.1 Operations Recordkeeping

All field inspection and testing activities will be documented in a project logbook. The project logbook will be maintained in accordance with the relevant Foster Wheeler Environmental Field Technical Guidelines. The Project Manager will maintain records of quality control operations and activities for subcontractors and suppliers.

7.5.2 Photographic Documentation

Still 35mm color photographs will be taken as needed to record work progress. At a minimum, photographs will be taken of the existing conditions before work begins, during the installation of the recovery wells, and during the site restoration. The photographs and log will be submitted with the As-Built Drawings.

APPENDIX A
PIPING CALCULATIONS

FOSTER WHEELER

FOSTER WHEELER ENVIRONMENTAL CORPORATION

Internal Memorandum

TO: Mike Heffron

FROM: Surendra Bhalla S. Bhalla

DATE: July 8, 1997

SUBJECT: **NAVAL WEAPONS STATION - EARLE**
STEEL CASING UNDER RAIL ROAD TRACKS

As requested we have performed structural calculations to determine the minimum, thickness for 12 inches and 6 inches steel casings planned to be installed under the existing rail tracks. A copy of the calculations is attached for your use.

Based on the calculations, standard wall steel casings (ASTM A53, grade B) will be adequate for the intended use. We would suggest that the bottom of the casings should be maintained at or below the frost depth. We also suggest that casings may be closed at ends with the system piping placed through the holes in the casing side covers.

Please call me if you have any questions.

cc: A. Holcomb (w/o att.)
M. Hsieh (w/att)

FOSTER WHEELER ENVIRONMENTAL CORPORATION

BY M. Hsieh DATE 7-7-97 SHEET 1 OF 2

CHKD. BY S. Bhalla DATE 7-8-97 OFS NO. _____ DEPT. NO. _____

CLIENT Navy

PROJECT Naval Weapons Station Earle Site

SUBJECT Steel Protective Casing Design

Purpose : To determine the wall thickness of a 6-in. and 12-in. buried steel casing subjected to railroad loadings.

Given Design Data :

Live Load : 30 ton per axle (Cooper E60)
Depth of Cover : 2 to 2.5 ft (Assume to be 2 ft)
Dead Load : 120 pcf (assumed)

References :

1. Handbook of Steel Drainage & Highway Construction Products, by American Iron and Steel Institute, 1971

2 Grinnell Pipe Catalog, P-90

FOSTER WHEELER ENVIRONMENTAL CORPORATION

BY M. Hsieh DATE 7-8-97 SHEET 2 OF 2

CHKD. BY S. Bhalla DATE 7-8-97 OFS NO. _____ DEPT. NO. _____

CLIENT NAVY

PROJECT Naval Weapons Station Earle Site

SUBJECT Steel Protective Casing Design

From Table 3-1 of Ref. 1 (see attached)

Live Load on pipe under Cooper E80 Loading

= 3800 psf for 2' cover

∴ Live Load on pipe under Cooper E60 Loading (30 ton Axle load)

$= 3800\left(\frac{60}{80}\right) = 2850$ psf

Dead Load on pipe = 120 (2) = 240 psf

Total Load = L.L + D.L = 2850 + 240 = 3,090 psf

Design Pressure $P_v = K(DL + LL)$

where K = Load factor depending on backfill compaction.

K = 0.86 at 85 % std. Density per AASHTO T-99

= 1.0 at 80 % std. Density per AASHTO T-99

Conservatively use K = 1.0

∴ $P_v = 1.0(DL + LL) = 3{,}090$ psf

$C = P_v\left(\frac{S}{2}\right) = P_v \cdot R$ (Ref. 1)

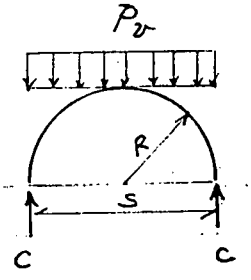

<u>12-in. Steel Casing</u> : R = 0.5 ft

$C = 3{,}090(0.5) = 1545$ lb/ft = 129 lb/in.

For ASTM A53, Grade B steel pipe, $f_y = 35{,}000$ psi

use allowable compressive stress = $f_y/2 = 17{,}500$ psi (Ref. 1)

Wall thickness $= \frac{129}{17{,}500} = 0.0074$ in.

Use Schedule 40 pipe, t = 0.375 in >> 0.0074 in (Ref. 2)
(standard wall)

<u>6-in. Steel Casing</u> : R = 0.25 ft

$C = 3{,}090(0.25) = 773$ lb/ft = 64.4 lb/in

Wall thickness $= \frac{64.4}{17{,}500} = 0.0037$ in

Use schedule 40 pipe, t = 0.28 in >> 0.0037 in
(standard wall)

Reference 1

ession ring supported by
al concept proved com-
rational design criteria.[7]
levices supplied a wealth
structures[8,9]. This work
gns of buried corrugated
nsored by American Iron
ersity under the direction
and conclusions are de-
r.
he higher fills and larger
d design approach with
actual load on the pipe
pipe wall is known over
ressive stress in the steel
ors. (Fig. 3-6).

CTURES

e loads on the conduit.
kinds of loads:
trench backfill, plus sta-
or concentrated; and

ay and railway traffic are
h charts prepared by the
These charts modify the
tible with observed per-
Minimum cover recom-
Minimum Cover.

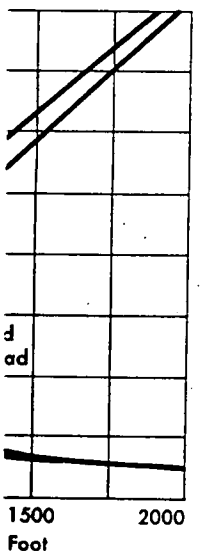

a minimum at about 5 ft.

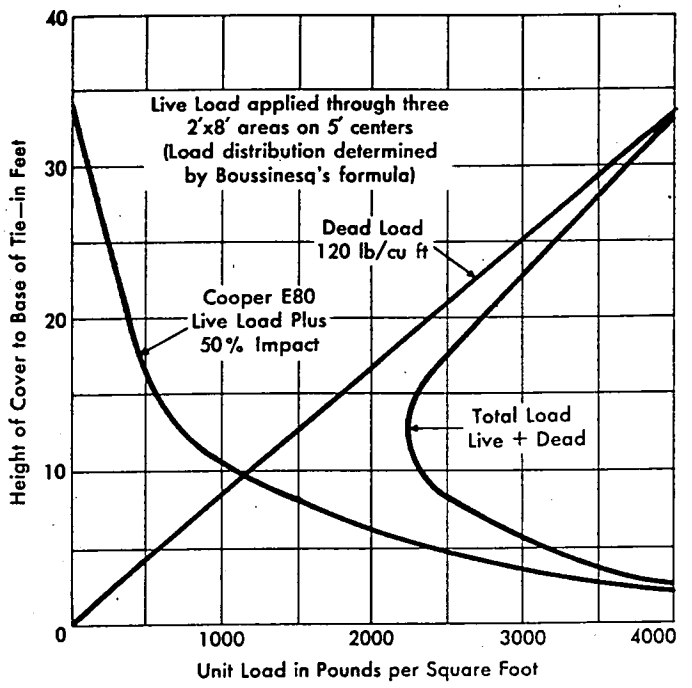

Fig. 3-4. Railroad live load, Cooper E 80, combined with dead load is a minimum at about 12 ft. Load is applied through three 2 ft x 8 ft areas on 5 ft centers.

Table 3-1 Highway and Railway Live Loads

Highway H 20 Loading*[11]		Railway E 80 Loading*[12]	
Height of Cover (Ft)	Load, psf	Height of Cover (Ft)	Load, psf
1	1800	2	3800
2	800	5	2400
3	600	8	1600
4	400	10	1100
5	250	12	800
6	200	15	600
7	175	20	300
8	100	30	100

*Neglect live load when less than 100 psf; use dead load only.

AIRPORT LOADS

The significance of aircraft loads is principally in the area of required minimum cover. Some modern airport design involves very heavy wheel loads of planes not yet designed. Projected wheel configurations and weights for airplanes weighing up to 1½ to 2 million pounds have been used to develop minimum cover tables for the Federal Aviation Agency. See Tables HC-19, -20, -21 and 22, pages 122–124.

. The "projecting" or embank-
the trench condition typical of a
gnificant load reductions on the
n trench depths limits the load
rdinary corrugated steel sewers.
ated steel pipe sizes is adequate
inary trench depths. There are
ting trench loads. (Methods of
ASCE Sewer Design Manual.)[13]
prism over the pipe. The unit
tal plane at the top of pipe is

.....(1)
il, in lb per cu ft
r pipe
re, in lb per sq ft

OF BURIED

ollowing:
quired or expected
o the total load to establish the

s for the pipe size, corrugation

wall

n applicable).

for *design*. The value chosen
structure and the quality that
l value for routine use is 85%.
ations in which most specifica-
ver, for more important struc-
ust be given to selecting higher
ction.

ter than the span or diameter
Fig. 3-5, to determine the per-
For routine-use the 85% soil
ctor, K, is applied to the total
on the steel. If the height of

Reference 1

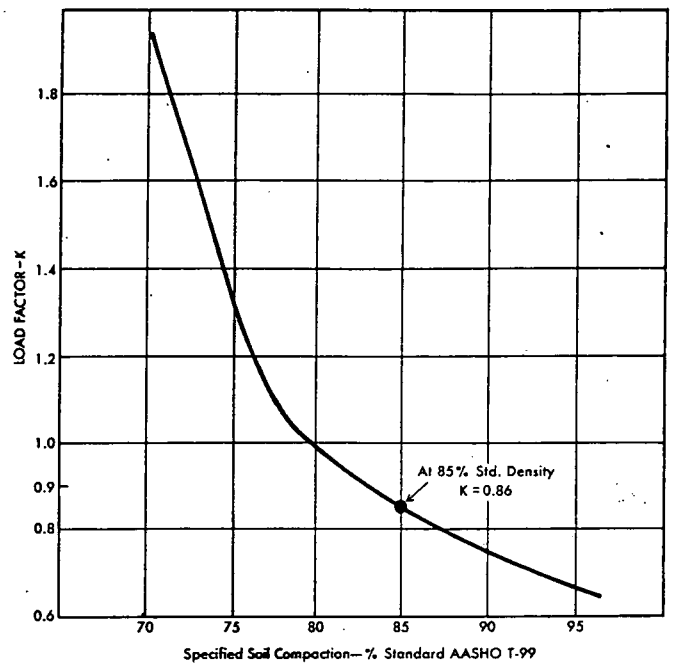

Fig. 3-5. Load factors for corrugated steel pipe for backfill compacted to AASHO standard density. For example, at 85% the load factor K is 0.86. This factor is applied to the total load to obtain the design pressure.

cover is less than one pipe diameter, the total load is assumed to act on the pipe, and TL = P_v.

$$P_v = K \times (DL + LL), \text{ when } H \geq S \quad \text{.....(2)}$$
$$P_v = (DL + LL), \text{ when } H < S$$

where: P_v = Design pressure, in psf
K = Load factor
DL = Dead load, in psf
LL = Live load, in psf
H = Height of cover
S = Span

3. Ring Compression[5]

The compressive thrust in the conduit wall is equal to the radial pressure acting on the wall multiplied by the wall radius or: $C = P \times R$. This thrust, called the "ring compression", is the force carried by the steel. The ring compression is an axial load acting tangentially to the conduit wall. For conventional structures in which the top arc approaches a semicircle, it is convenient to substitute half the span for the wall radius.

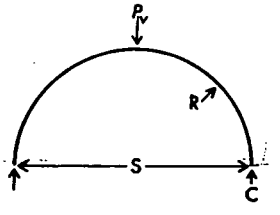

Then: $C = P_v \times \frac{S}{2}$ .....(3)

where: C = Ring compression, lb per ft
P_v = Design pressure, lb per ft²
S = Span, in ft

Grinnell

Reference 2

standard wall-steel pipe A-53

nominal pipe size in.	O.D. in.	I.D. in.	wall thickness in.	plain end wt.	thread per in.	plain end test pressure (psi) butt weld (cw)	seamless & ERW grade A	seamless & ERW grade B
⅛	.405	.269	.068	.24	27	700	700	700
¼	.540	.364	.088	.42	18	700	700	700
⅜	.675	.493	.091	.57	18	700	700	700
½	.840	.622	.109	.85	14	700	700	700
¾	1.050	.824	.113	1.13	14	700	700	700
1	1.315	1.049	.133	1.68	11½	700	700	700
1¼	1.660	1.380	.140	2.27	11½	1000	1200	1300
1½	1.900	1.610	.145	2.72	11½	1000	1200	1300
2	2.375	2.067	.154	3.65	11½	1000	2300	2500
2½	2.875	2.469	.203	5.79	8	1000	2500	2500
3	3.500	3.068	.216	7.58	8	1000	2220	2500
3½	4.000	3.548	.226	9.11	8	1200	2030	2370
4	4.500	4.026	.237	10.79	8	1200	1900	2210
5	5.563	5.047	.258	14.62	8	1200	1670	1950
6	6.625	6.065	.280	18.97	8	—	1520	1780
8	8.625	7.981	.322	28.55	8	—	1340	1570
10	10.750	10.020	.365	40.48	8	—	1220	1430
12	12.750	12.000	.375	49.56	8	—	1060	1240

extra-strong wall-steel pipe A-53

nominal pipe size in.	O.D. in.	I.D. in.	wall thickness in.	plain end wt.	plain end test pressure butt weld (cw)	seamless & ERW grade A	seamless & ERW grade B
⅛	.405	.215	.095	.31	850	850	850
¼	.540	.302	.119	.54	850	850	850
⅜	.675	.423	.126	.74	850	850	850
½	.840	.546	.147	1.09	850	850	850
¾	1.050	.742	.154	1.47	850	850	850
1	1.315	.957	.179	2.17	850	850	850
1¼	1.660	1.278	.191	3.00	1300	1800	1900
1½	1.900	1.500	.200	3.63	1300	1800	1900
2	2.375	1.939	.218	5.02	1300	2500	2500
2½	2.875	2.323	.276	7.66	1300	2500	2500
3	3.500	2.900	.300	10.25	1300	2500	2500
3½	4.000	3.364	.318	12.51	1700	2800	2800
4	4.500	3.826	.337	14.98	1700	2700	2800
5	5.563	4.813	.375	20.78	—	2430	2800
6	6.625	5.761	.432	28.57	—	2350	2740
8	8.625	7.625	.500	43.39	—	2090	2430
10	10.750	9.750	.500	54.74	—	1670	1950
12	12.750	11.750	.500	65.42	—	1410	1650

FOSTER WHEELER ENVIRONMENTAL CORPORATION

BY MS DATE 6/20/97 SHEET 2 OF

CHKD. BY DATE OFS NO. DEPT. NO.

CLIENT PADEP

PROJECT NWS EARLE

SUBJECT OVERBURDEN CALCULATION

GIVEN: SCHEDULE 80, 4" DIAMETER PVC PIPE TO BE BURIED 3' DOWN IN 2' WIDE SQUARE TRENCH SOIL IS SANDY W/ SOME SILT & CLAY

FIND: HOW MUCH OVERBURDEN AND LIVE LOADS PIPE CAN WITHSTAND

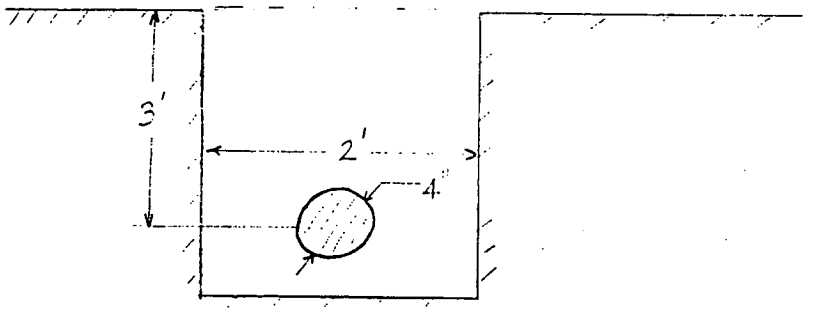

CALCULATE OVERBURDEN ON PIPE: $W_d = C_d w B_d^2$

W_d = LOAD ON BURIED PIPE (lb/ft)

C_d = COEFFICIENT BASED ON TYPE OF BACKFILL AND RATIO OF TRENCH DIMENSIONS

w = UNIT WT. OF BACKFILL pcf

B_d = WIDTH OF TRENCH AT TOP OF PIPE

$$\frac{H}{B_d} = \frac{2.83}{2} = 1.42$$

BASED ON REFERENCE FIG. 10-16 FOR B TYPE MATERIAL (SAND AND GRAVEL)

$C_d \approx 1.2$

W = 83 – 118 pcf FOR CLEAN UNIFORM SAND; USE 100 pcf

B_d = 2'

$$W_d = (1.2)(100\ pcf)(2')^2 = 480\ lb/LF \text{ OVERBURDEN}$$

STANDARD PIPE STRENGTHS ARE DEFINED UNDER ASTM STANDARD D27.74 (VOL. 8)

FOR CONCENTRATED LOAD, DIVIDE BY PIPE WIDTH: $\frac{480\ LB/FT}{.33\ FT} = 1454$ psf

FOSTER WHEELER ENVIRONMENTAL CORPORATION

BY MS DATE 6/25/97 SHEET 3 OF

CHKD. BY DATE OFS NO. DEPT. NO.

CLIENT

PROJECT

SUBJECT

HARVEL PLASTICS, INC., A MANUFACTURER OF SCHEDULE 80 PVC PROVIDED A TABLE (SEE p. 7) OF CRITICAL COLLAPSE PRESSURE RATINGS. A SCH 80, 4"D PVC PIPE CAN WITHSTAND 451 psi OF EXTERNAL PRESSURE

$$451 \text{ psi} = 64944 \text{ psf}$$

SUBTRACTING THE OVERBURDEN:

$$64944 \text{ psf} - 1454 \text{ psf} = 63490 \text{ psf}$$

THE BURIED PIPE CAN WITHSTAND 6.35×10^4 psf OF LIVE LOAD DUE TO TRUCK TRAFFIC

CALCULATE TYPICAL LOADING DUE TO TRUCK TRAFFIC:

TYPICAL TRUCK WEIGHT $\leq$ 32000 lb (SEE p. 8)

FORMULA FOR SUPERIMPOSED CONCENTRATED LOADS:

$$W_{SC} = C_S \frac{PF}{L}$$

W_{SC} : LOAD ON CONDUIT (#/UNIT LENGTH)

F : IMPACT FACTOR

C_S : LOAD COEFFICIENT (FROM TABLE) BASED ON $\frac{B_c}{2H}$ & $\frac{L}{2H}$

H : HEIGHT FROM TOP OF PIPE TO GROUND SURFACE

B_c : WIDTH OF PIPE

L : EFFECTIVE LENGTH OF PIPE MAX = 3'

P = CONCENTRATED LOAD = 32000#

FROM DESIGN & CONSTRUCTION OF SANITARY & STORM SEWERS; WATER POLLUTION CONTROL FEDERATION; 1970.

ASSUME 4"D PIPE TO HAVE $\frac{1}{4}$" WALL THICKNESS.

$$\frac{B_c}{2H} = \frac{0.333}{2(2.83)} = 0.059 \qquad \frac{L}{2H} = \frac{3}{2(2.83)} = 0.53$$

FROM TABLE (p 9) : $C_S = 0.079$

FOSTER WHEELER ENVIRONMENTAL CORPORATION

BY MS DATE 6/25/97 SHEET 4 OF

CHKD. BY DATE OFS NO. DEPT. NO.

CLIENT

PROJECT

SUBJECT

$C_s = 0.079$

$F = 1.50$ (FOR HIGHWAY TRAFFIC - FROM TABLE p. 10)

$P = 32000\#$

$L = 3'$

$$W_{sc} = 0.079 \frac{32000 \times 1.5}{3} = 1264 \frac{\#}{ft}$$

$W_{sc} = 3830$ psf = LOAD FROM TRUCK TRAFFIC ON PIPE

$3830 \text{ psf} < 6.35 \times 10^4 \text{ psf}$

∴ PIPE IS STRONG ENOUGH TO SUPPORT OVERBURDEN AND TRUCK LOADS

FOR CONCENTRATED LOAD DIVIDE BY WIDTH OF PIPE = 0.33'

psf

5 OF

durable and has a smooth surface without lining, but epoxy-lined pipe is available for special applications. Joints are made with an outside coupling and flexible rubber rings (see Figure 6-15). Nonpressure sewer pipe is available in the size range from 4- to 42-in. diameter in 13-ft lengths; shorter lengths are available in smaller sizes, and 6½-ft sections are available in 10- to 21-in. sizes. Pipe is available in class designations based on supporting strength.

Plastic pipe used most frequently in sewer systems is of PVC (polyvinyl chloride) and PE (polyethylene). PVC pipe is produced in two strength classifications in sizes from 4 to 12 in. A few manufacturers make pipe up to 30-in. diameter. The standard length is 20 ft with others available. PVC pipe sections have a deep-socket, bell end to accommodate a chemical weld joint. Solvent is spread both on the inside of the bell and on the plain end before they are pushed together. PE pipe is joined [illegible] the aligned faces of the ends in a suitable apparatus and pressing them together under controlled pressure. PVC pipe is used for building connections and branch sewers, while the popular application of PE pipe has been for long pipelines, often laid under adverse conditions, for example, in swamp or underwater crossings.

Precast concrete sewer pipe may be obtained in many sizes with several kinds of joints. Choice of a particular type of pipe and joint depends on application, location, and conditions for installation. Nonreinforced concrete pipe is available in 4- to 24-in. diameters in 3- or 4-ft lengths. It is manufactured in standard strength and extra strength grades. The bell and spigot ends are normally joined by using a rubber ring gasket. Circular reinforced concrete pipe, produced in a size range from 12 to 108 in., is available in five classes based on strength. Precast conduits are also manufactured in elliptical and arch-type shapes. Tongue and groove joints, which are common in reinforced pipe, use a mastic compound or rubber gasket to form a watertight seal.

Concrete pipe is used extensively in storm sewer systems for its abrasion resistance, availability in large sizes, high crushing strength, and, generally, lower cost relative to pipes of other materials. Since concrete is an alkaline material subject to attack by acids, it should not be used for small-sized sanitary sewers where hydrogen sulfide production can cause internal corrosion. However, reinforced concrete pipe is installed for sanitary trunk sewers where the diameter exceeds the available sizes of vitrified clay pipe. Here the installation must be protected by control of acidic, high-temperature, and high-sulfate wastewaters by adding chemicals to control biological growth, maintaining flushing velocities and adequate ventilation, and installation of pipe lining if necessary. Epoxy or plastic lining may be cast into the concrete pipe during manufacture; or bitumastic or coal-tar epoxy may be painted on the concrete pipe surfaces after installation.

Ductile-iron pipe is used for force mains, inverted siphons, inside pumping stations and treatment plants, when proper separation from water mains cannot be maintained, and where poor sewer foundation conditions exist. Other pipe materials for special applications in wastewater collection systems are smooth wall and corrugated steel pipe, bituminized fiber, and reinforced [illegible] pipe.

10-5 LOADS ON BURIED PIPES

Sewer design requires prior knowledge of soil and site conditions to determine overburden loads that will be placed on the buried pipe. Crushing strength of the pipe and type of bedding define the load that can be safely supported by a sewer. The paragraphs that follow are an overview of considerations in sewer design.

Backfill load on a pipe depends on trench width, depth of burial, unit weight of the fill material, and frictional characteristics of the backfill. These parameters are formulated in Eq. 10-1 and are defined in Figure 10-15. Soil exploration data, size of pipe, depth of burial, and trench excavation technique by the contractor are needed to compute backfill load. Unit weight of the fill and trench width are applied directly in Eq. 10-1. Coefficient C_d depends on the ratio of trench depth to width and the backfill material as graphed in Figure 10-16.

$$W_d = C_d w B_d^2 \qquad (10\text{-}1)$$

where W_d = load on buried pipe as a result of backfill, pounds per linear foot

C_d = coefficient based on the backfill and ratio of trench depth to width, Figure 10-16

w = unit weight of backfill, pounds per cubic foot

B_d = width of trench at top of pipe, feet

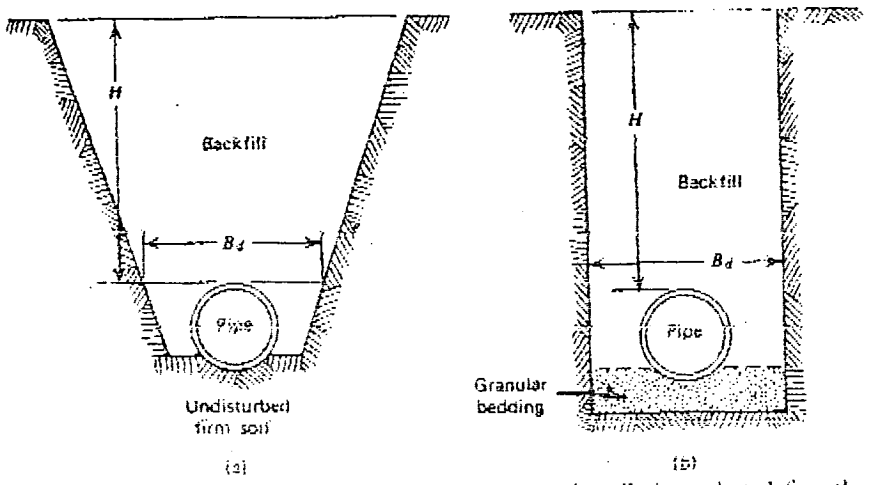

Figure 10-15 Common trench cuts used for sewer installations that define the dimensions B_d and H as applied in Eq. 10-1 and Figure 10-16. The minimum trench width for working space to install pipe is commonly taken as $\frac{1}{3}$ the pipe diameter plus 8 in. (*a*) Trench with sloping sides in cohesionless soil. (*b*) Vertical trench walls in stiff clayey soil.

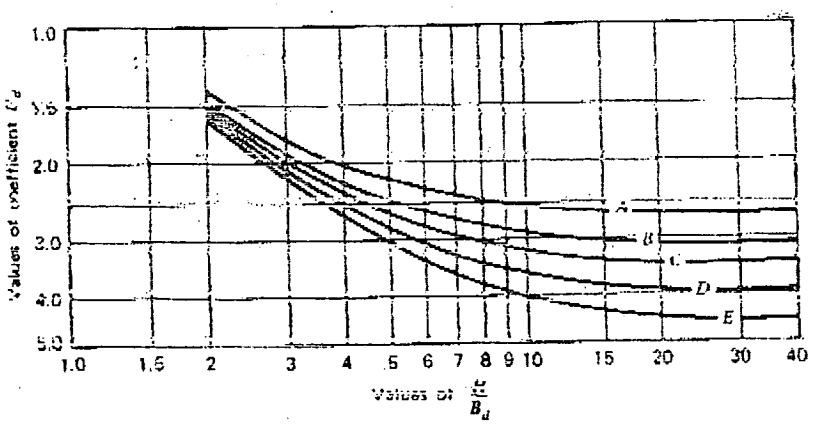

Figure 10-16 Diagram for the coefficient C_d in Eq. 10-1 based on H/B_d and type of trench backfill: *A*, granular material without cohesion; *B*, sand and gravel; *C*, maximum for saturated top soil; *D*, ordinary clay; *E*, maximum for saturated clay.

Design manuals published by the American Concrete Pipe Association, National Clay Pipe Institute, and others provide tables listing backfill loads for various conditions based on Eq. 10-1. An example is Table 10-2 for 8-in. circular pipe and ordinary clay fill with a unit weight of 100 lb/cu ft. Tables such as this have been developed for other pipe diameters and backfill materials. From the proper table, height of fill above the pipe and trench width are used to select backfill load. This number is then adjusted for the proper unit weight; for backfill

HARVEL PLASTICS, INC.
P.O. BOX 757 EASTON, PA. 18044-0757
PHONE: 610-252-7355 FAX: 610-253-4436

CRITICAL COLLAPSE PRESSURE RATING OF HARVEL PVC AND CPVC PIPING IN PSI (and inches of water)

(Based @ 73°F with no safety factor, appropriate temperature de-rating factors must be applied for the material selected when working at temperatures greater than 73°F)

SIZE	DUCT	SDR 41	SDR 26	SDR 21	SCH 40	SCH 80	SCH 120
2"	N/A				316 (8746)	939 (25989)	1309 (36230)
2 1/2"	N/A				451 (12483)	975 (26986)	1309 (36230)
3"	N/A				307 (8497)	722 (19983)	1128 (31221)
3 1/2"	N/A				217 (6006)	578 (15998)	N/A
4"	N/A				190 (5259)	451 (12482)	1128 (31221)
5"	N/A				117 (3238)	N/A	N/A
6"	N/A				[illegible] (2491)	[illegible] (9493)	722 (19983)
6" x 1/8"	5.2 (144)	17 (470)	74 (2048)	126 (3487)	N/A	N/A	N/A
6 x 3/16"	20.7 (426)	17 (470)	74 (2048)	126 (3487)	N/A	N/A	N/A
8"	10.0 (193)				58 (1605)	235 (6504)	N/A
10"	5.4 (100)				49 (1356)	217 (6006)	N/A
12"	3.0 (60)				42 (1162)	199 (5508)	N/A
14"	2.5 (45)				40 (1107)	194 (5369)	N/A
16"	1.6 (30)				40 (1107)	181 (5010)	N/A
18"	1.0 (26)				N/A	162 (4484)	N/A
20"	1.3 (20)				N/A	N/A	N/A
24"	1.0 (20)				N/A	N/A	N/A

SDR Series Pipe maintains the same collapse ratings for all sizes due to the wall thickness/OD ratio.
Appropriate temperature de-rating factors must be applied at temperatures other than 73 °F based on the material selected.

CRITICAL COLLAPSE PRESSURE is the maximum allowable pressure that can be applied externally to pipe, and is directly related to the wall thickness of the pipe selected. Examples of external pressure conditions can occur: when buried pipe is subjected to soil loads; underwater applications; vacuum service; and pipe installed on pump suction lines. The actual external load being applied to the pipe is the difference between the external pressure and the internal pressure which counter act each other. As a result, a pressurized pipe can withstand a greater external load than an empty pipe.

8 OF

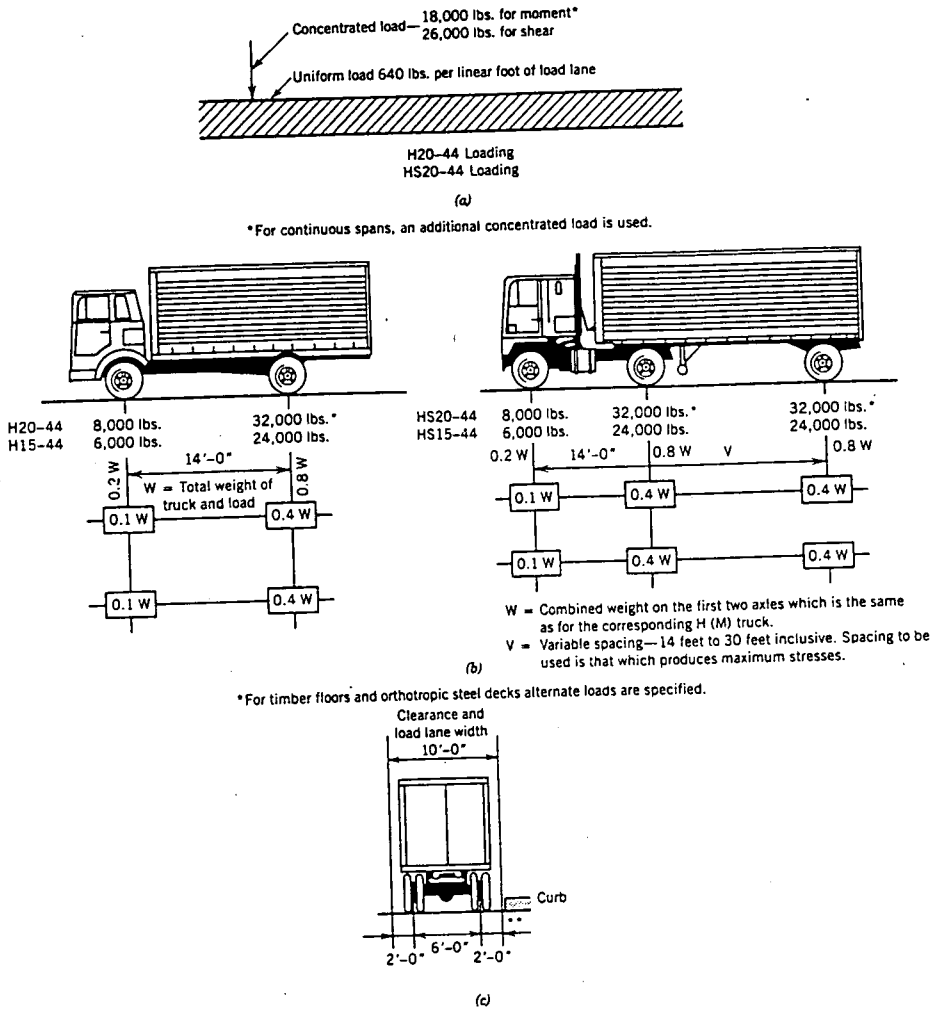

Figure 1.24 Typical highway bridge loading (Taken from *Standard Specifications for Highway Bridges,* copyright 1989 by American Association of Highway and Transportation Officials. Reproduced with permission). *(a)* Lane loading. *(b)* Truck loading. *(c)* Lane arrangement.

larger of the two results is taken as the critical value of that quantity. Each response quantity of interest must be treated separately, and the critical loading arrangement must be established for each. Problems of this type are considered in detail in Chapter 6.

A similar approach is used in the design of railroad bridges. Here, the standard loading consists of a series of concentrated loads, separated by prescribed distances, followed by a uniform loading. This loading is described in *Specifications for Steel Railway Bridges,* which is cited in Section 1.11.

WEST, HARRY H.; FUNDAMENTALS OF STRUCTURAL ANALYSIS; JOHN WILEY & SONS, INC.; 1993

10 OF

(m). The effective length of a conduit is defined as the length over which the average load due to surface traffic units produces the same stress in the conduit wall as does the actual load which varies in intensity from point to point. Little research information is available on this subject. Tentative recommendations are to use an effective length equal to 3 ft (0.9 m) for conduits greater than 3 ft long. Use the actual length for conduits shorter than 3 ft.

If the concentrated load is displaced laterally and longitudinally from a vertically centered location over the section of pipe under construction, the load on the conduit can be computed by adding algebraically the effect of the concentrated load on various rectangles each with a corner centered under the concentrated load. Values of C_s in Table XXVI divided by 4 equal the load coefficient for a rectangle whose corner is vertically centered under the concentrated load.

(*a*) Impact Factor

The impact factor, F, reflects the influence of dynamic loads caused by traffic. Suggested values for various kinds of traffic are:

Traffic Type	F
Highway	1.50
Railway	1.75
Airfield:	
Runways	1.00
Taxiways, aprons, hard stands	1.50

Example 9. Determine the load on a 24-in. diam pipe under 3 ft of cover caused by a 10,000-lb truck wheel applied directly above the center of the pipe.

Assume the pipe section is 2.5 ft long; the wall thickness is 2 in.; and the impact factor is 1.5. Then $B_c=24+4=28$ in.$=2.33$ ft; $L=2.5$ ft; and $H=3.0$ ft. Finally $B_c/2H=2.33/6=0.39$; and $L/2H=2.5/6=0.41$; the load coefficient is 0.240 from Table XXVI. Substituting in Equation 11,

$$W_{sc}=0.240\times\frac{10{,}000\times 1.5}{2.5}=1{,}440 \text{ lb/ft } (2{,}140 \text{ kg/m}).$$

3. Distributed Loads

For the case of a superimposed load distributed over an area of considerable extent, as shown in Figure 57, the formula for load on the conduit is

$$W_{sd}=C_s pFB_c \qquad (12)$$

in which W_{sd} is the load on the conduit in lb/unit length (kg/unit length); p is the intensity of distributed load in psf (kg/sq m); F is the impact factor; B_c is the width of the conduit in ft (m); C_s is the load coefficient, a function of $D/(2H)$ and $M/(2H)$ from Table XXVI; H is the height from the top of the conduit to the ground surface in ft (m); and D and M