N00210.AR.000276
NTC GREAT LAKES
5090.3a

QUARTERLY O&M SAMPLING REPORT FOR SUPPLYSIDE LANDFILL MONITORING WELLS NAVAL TRAINING CENTER GREAT LAKES, ILLINOIS

ENVIRONMENTAL JOB ORDER CONTRACT (EJOC)
BPA MASTER NUMBER N68950-03-3018
BPA CALL NUMBER 000301
GAS PROJECT NO. 2003-0185.01

Submitted to:

Department of the Navy
Naval Training Center – Environmental Department
Building 1-A, 201 Decatur Avenue
Great Lakes, Illinois 60088-5600

Submitted by:

Graef, Anhalt, Schloemer & Associates, Inc.
125 S. 84th Street, Suite 401
Milwaukee, Wisconsin 53214
(414) 259-1500

SEPTEMBER, 2003

1.0 Introduction

Graef, Anhalt, Schloemer & Associates, Inc. has been retained by the Department of the Navy, Naval Facilities Engineering Command under BPA Master Number N68950-03-3018, BPA Call Number 000301 to furnish the labor, transportation, supervision, material, and equipment in connection with the sampling, analysis, and reporting for the Supplyside Landfill monitoring wells located at the Great Lakes Naval Training Center (GLNTC) in Great Lakes, Illinois. The work is performed on a quarterly basis for one year.

This report document's the activities related to the 2003 first quarter sampling event for the groundwater monitoring wells located at the Supplyside Landfill (Figure 1). The purpose of the sampling event is to report the current groundwater quality conditions at the Supplyside Landfill to the Department of the Navy.

2.0 Fi Id Activities

On August 6, 2003, depths to the static groundwater level were measured in monitoring wells MW-A through MW-F at the Supplyside Landfill utilizing a water level probe. The probe was decontaminated prior to each measurement by washing it with an Alconox soap solution and rinsing it with deionized water.

Following the measurement of the depth to static groundwater, groundwater samples were collected from monitoring wells MW-A through MW-F. Groundwater samples could not be collected from monitoring wells MW-G due to a bent well casing. Prior to collecting the groundwater samples, the wells were purged of three well volumes of water utilizing single use disposable polyethylene bailers. Purging was conducted to ensure the collection of a representative groundwater sample. After allowing sufficient time for recharge, groundwater samples were collected and transferred from the bailers to the appropriate laboratory-supplied sample containers. Samples for metal analysis were collected last and were filtered in the field utilizing a disposable in-line filtration module (0.45 micron filter).

The groundwater sample containers were placed in a cooler with ice and shipped to Test America, Inc. located in Watertown, Wisconsin using standard United States Environmental Protection Agency (USEPA) protocols.

3.0 Laboratory Analysis

The groundwater samples collected from the Supplyside Landfill's groundwater monitoring were analyzed for the following constituents in accordance with the Illinois Environmental Protection Agency (IEPA) protocols:

- Iron by Method 236.1;
- Lead by Method 239.2;
- Manganese by Method 243.1;
- Ammonia by Method 5M4500 NHH;
- Chloride by Method 325.2;
- Phenol by Method 420.2;
- Sulfate by Method 300.0;
- Total Dissolved Solids (TDS) by Method 160.1;
- Total Organic Carbon (TOC) by Method 415.1; and
- pH by Method 150.1;

The historical and current laboratory analytical results for the groundwater samples are summarized in Table 1 through Table 6 and a copy of the current laboratory analytical report is attached to this report.

Tables

Analytical Results for Monitoring Wells

Table 1
Analytical Results for Monitoring Well-A
Quarterly O&M Sampling for
Supplyside Landfill Monitoring Wells

Monitoring Well	Sampling Round	Ammonia	Chloride	PH	Sulfate	TDS	TOC	Phenolics	Iron	Lead	Manganese
MW-A	Jul-99	12.8	55.2	6.9	50.8	683	22.8	<0.10	10.6	<0.001	0.53
	Oct-99	7.5	46.1	6.85	102	679	25.7	<0.10	4.25	<0.001	0.478
	Jan-00	8.86	47.9	6.91	112	414	13.5	0.27	1.01	0.003	0.517
	Apr-00	110	10.0	7.02	190	700	19.0	0.036	0.12	3.0	0.24
	Jul-00	0.40	4.94	7.0	50.5	717	34	<0.005	10.7	<5.00	0.642
	Oct-00	6.0	44.3	7.06	2.84	706	11	<0.005	9.98	<0.004	0.147
	Jan-01	13.9	61.2	7.01	12.6	778	12	<0.005	16.8	<5.00	0.883
	Apr-01	0.0336	53.2	7.0	135	823	15	<0.005	2.66	<0.004	1.02
	Jul-01	20.4	50.4	6.6	66.2	795	20	<0.1	17.6	<0.003	0.61
	Oct-01	14.0	12.1	6.76	106.0	509	16.0	<0.1	9.32	<0.171	0.53
	Jan-02	20.3	47.2	6.58	71	773	9	<0.005	20.3	<0.171	0.518
	Apr-02	31	35	6.8	92	780	14	<0.005	13,000	<1.0	520
	Jul-02	9.9	-	6.82	57	770	13	0.005	11	0.002	0.46
	Oct-02	17.0	63.0	7.01	110	740	13	0.005	25	0.002	0.51
	Jan-03	16.2	55	6.96	270	834	9.18	<0.005	11.8	<0.002	0.578
	Apr-03	Not Yet Sampled									
IEPA Groundwater Standards		N/A	200	6.5-8.5*	400	1,200	N/A	0.10	5	0.0075	0.15

Notes:
1. Concentrations are reported in milligrams per liter (mg/L).
2. Standards pertain to IEPA Class 1 Groundwater Quality Standards.
3. N/A – Not Applicable, IEPA or USEPA standards have not been established for these constituents.
4. * - Reported limit is from USEPA National Secondary Drinking Water Regulations since there is no IEPA standard.
5. Shaded = exceeds groundwater standard.

Tabl 1
Analytical Results for Monitoring Well-A
Quartely O&M Sampling for
Supplyside Landfill Monitoring Wells

Monitoring Well	Sampling Round	Amonia	Chloride	PH	Sulfate	TDS	TOC	Phenolics	Iron	Lead	Manganese
MW-A	7/16/2003	14	17	7.0	150	750	16	<0.0056	2.4	<0.0014	0.49
IEPA Groundwater Standards		N/A	200	6.5-8.5*	400	1,200	N/A	0.10	5	0.0075	0.15

Notes:
1. Concentrations are reported in milligrams per liter (mg/L).
2. Standards pertain to IEPA Class 1 Groundwater Quality Standards.
3. N/A - Not Applicable, IEPA or USEPA standards have not been established for these constituents.
4. * - Reported limit is fronm USEPA National Drinking Water Regulations since there is no IEPA standard.
5. Shaded = exceeded groundwater standard.

Table 2
Analytical Results for Monitoring Well-B
Quarterly O&M Sampling for
Supplyside Landfill Monitoring Wells

Monitoring Well	Sampling Round	Ammonia	Chloride	pH	Sulfate	TDS	TOC	Phenolics	Iron	Lead	Manganese
MW-B	Jul-99	5.5	254	7.02	122	<10.0	24.4	<0.10	5.85	<0.001	0.252
	Oct-99	6.38	331	6.93	161	1,340	38.8	<0.10	2.16	0.002	0.221
	Jan-00	4.95	425	6.93	147	1,470	25.8	<0.10	5.08	<0.001	0.163
	Apr-00	76	300	6.96	190	1,500	35	0.054	8.0	<3.0	0.32
	Jul-00	0.96	7.61	7.5	378	1,099	36	<0.005	8.36	<5.00	0.193
	Oct-00	10.8	152	7.14	8.82	1,800	19	38.1	5.21	<0.004	<0.0001
	Jan-01	5.60	292	6.97	9.98	1,630	28	0.0127	10.6	<5.00	0.117
	Apr-01	<0.0277	390	7.0	132	332	23	0.00794	8.87	<0.004	0.104
	Jul-01	8.7	360	6.64	127	1,560	21	<0.1	9.24	<0.003	0.145
	Oct-01	5.6	300	7.07	104	1,360	32	<0.1	8.86	<0.171	0.128
	Jan-02	97	382	6.62	113	1,500	20	0.01	9.44	<0.171	0.133
	Apr-02	2	200	6.7	160	1,500	23	<0.005	7,400	97	2.8
	Jul-02	8.7	-	6.87	150	1,700	21	0.005	3.9	0.002	0.11
	Oct-02	3.9	410	6.91	150	1,500	22	0.093	8	0.002	0.13
	Jan-03	18.6	360	6.90	330	1,410	16.6	<0.005	6.82	<0.002	0.129
	Apr-03	Not Yet Sampled									
IEPA Groundwater Standards		N/A	200	6.5-8.5*	400	1,200	N/A	0.10	5	0.0075	0.15

Notes:
1. Concentrations are reported in milligrams per liter (mg/L).
2. Standards pertain to IEPA Class 1 Groundwater Quality Standards.
3. N/A – Not Applicable, IEPA or USEPA standards have not been established for these constituents.
4. * - Reported limit is from USEPA National Secondary Drinking Water Regulations since there is no IEPA standard.
5. Shaded = exceeds groundwater standard.

Table 1
Analytical Results for Monitoring Well-B
Quartely O&M Sampling for
Supplyside Landfill Monitoring Wells

Monitoring Well	Sampling Round	Amonia	Chloride	PH	Sulfate	TDS	TOC	Phenolics	Iron	Lead	Manganese
MW-B	7/16/2003	9.5	290	6.8	140	1,800	7.2	<0.0056	6.2	<0.0017	0.83
IEPA Groundwater Standards		N/A	200	6.5-8.5*	400	1,200	N/A	0.10	5	0.0075	0.15

Notes:
1. Concentrations are reported in milligrams per liter (mg/L).
2. Standards pertain to IEPA Class 1 Groundwater Quality Standards.
3. N/A - Not Applicable, IEPA or USEPA standards have not been established for these constituents.
4. * - Reported limit is fronm USEPA National Drinking Water Regulations since there is no IEPA standard.
5. Shaded = exceeded groundwater standard.

Table 3
Analytical Results for Monitoring Well-C
Quarterly O&M Sampling for
Supplyside Landfill Monitoring Wells

Monitoring Well	Sampling Round	Ammonia	Chloride	pH	Sulfate	TDS	TOC	Phenolics	Iron	Lead	Manganese
MW-C	Jul-99	0.14	138	7.28	342	1,150	5.5	<0.10	0.676	<0.001	0.19
	Oct-99	0.34	137	7.20	279	1,650	11.7	<0.10	<0.100	<0.001	0.170
	Jan-00	<0.10	175	7.26	291	1,040	5.5	<0.10	<0.100	<0.003	0.050
	Apr-00	48	150	7.19	380	1,100	5.6	0.078	0.21	<3	<0.10
	Jul-00	0.80	13.1	7.5	160	1,307	<9	<0.005	<0.0044	<5.00	<0.0001
	Oct-00	<0.0277	140	7.32	15.2	1,070	<6	<0.005	<0.0044	<0.004	<0.0001
	Jan-01	<0.0277	151	7.24	15.2	1,070	<9	<0.005	0.070	<5.00	<0.0001
	Apr-01	<0.0277	160	6.5	203	1,100	<6	<0.005	<0.0044	<0.004	<0.15
	Jul-01	<0.4	137	6.91	318	1,100	<6	<0.1	<0.075	<0.003	<0.042
	Oct-01	<0.4	123	7.48	340	1,160	<6	<0.1	<0.116	<0.171	<0.042
	Jan-02	<0.4	124	6.96	331	1,130	<6	<0.005	<0.116	<0.171	<0.042
	Apr-02	0.94	140	6.9	300	1,000	2.3	<0.005	<100	1.0	35
	Jul-02	0.08	-	7.06	300	1,100	3	0.005	0.25	0.002	0.07
	Oct-02	0.24	110	6.98	210	1,100	2.6	0.005	0.05	0.002	0.017
	Jan-03	2.38	100	7.08	340	1,000	3	<0.005	<0.05	<0.002	0.017
	Apr-03	Not Yet Sampled									
IEPA Groundwater Standards		N/A	200	6.5-8.5*	400	1,200	N/A	0.10	5	0.0075	0.15

Notes:
1. Concentrations are reported in milligrams per liter (mg/L).
2. Standards pertain to IEPA Class 1 Groundwater Quality Standards.
3. N/A – Not Applicable, IEPA or USEPA standards have not been established for these constituents.
4. * - Reported limit is from USEPA National Secondary Drinking Water Regulations since there is no IEPA standard.
5. Shaded = exceeds groundwater standard.

Table 1
Analytical Results for Monitoring Well-C
Quartely O&M Sampling for
Supplyside Landfill Monitoring Wells

Monitoring Well	Sampling Round	Amonia	Chloride	PH	Sulfate	TDS	TOC	Phenolics	Iron	Lead	Manganese
MW-C	7/16/2003	9.5	74	6.8	260	1,300	5.1	<0.0056	0.065	<0.0014	0.12
IEPA Groundwater Standards		N/A	200	6.5-8.5*	400	1,200	N/A	0.10	5	0.0075	0.15

Notes:
1. Concentrations are reported in milligrams per liter (mg/L).
2. Standards pertain to IEPA Class 1 Groundwater Quality Standards.
3. N/A - Not Applicable, IEPA or USEPA standards have not been established for these constituents.
4. * - Reported limit is fronm USEPA National Drinking Water Regulations since there is no IEPA standard.
5. Shaded = exceeded groundwater standard.

Table 4
Analytical Results for Monitoring Well-D
Quarterly O&M Sampling for
Supplyside Landfill Monitoring Wells

Monitoring Well	Sampling Round	Ammonia	Chloride	pH	Sulfate	TDS	TOC	Phenolics	Iron	Lead	Manganese
MW-D	Jul-99	0.16	42.1	7.40	59.9	589	23.6	<0.10	<0.100	<0.001	0.214
	Oct-99	0.24	49.6	7.17	217	811	25.4	0.17	0.113	<0.001	0.119
	Jan-00	<0.10	38.1	7.20	286	1,130	9.5	0.20	0.399	<0.002	0.387
	Apr-00	44	90	7.15	310	940	3.7	<0.005	1.1	<3.0	0.77
	Jul-00	0.30	13.1	7.5	125	1,110	6	<0.005	0.580	<5.00	0.662
	Oct-00	<0.0277	74.5	7.26	11.3	1,019	<6	<0.005	0.592	<0.004	0.234
	Jan-01	<0.0277	50.5	7.30	8.09	3,000	<9	<0.005	1.21	<5.00	0.327
	Apr-01	<0.0277	31.9	7.0	58.1	429	<6	0.0381	1.78	<0.004	0.388
	Jul-01	0.8	61	7.03	92.8	602	<6	<0.1	0.61	<0.003	1.04
	Oct-01	<0.4	14.8	7.22	19.8	399	<6	<0.1	0.259	<0.171	0.054
	Jan-02	<0.4	39.2	7.04	52.6	515	<6	<0.005	1.36	<0.171	0.486
	Apr-02	0.92	30	7.0	110	490	1.7	0.002	260	<1.0	250
	Jul-02	0.05	-	-	-	-	-	-	0.05	0.002	0.13
	Oct-02	0.26	48	7.01	140	770	2	0.005	0.048	0.002	0.39
	Jan-03	0.970	55	7.16	630	658	2.8	<0.005	<0.05	0.00739	0.257
	Apr-03	Not Yet Sampled									
IEPA Groundwater Standards		N/A	200	6.5-8.5*	400	1,200	N/A	0.10	5	0.0075	0.15

Notes:
1. Concentrations are reported in milligrams per liter (mg/L).
2. Standards pertain to IEPA Class 1 Groundwater Quality Standards.
3. N/A – Not Applicable, IEPA or USEPA standards have not been established for these constituents.
4. * - Reported limit is from USEPA National Secondary Drinking Water Regulations since there is no IEPA standard.
5. Shaded = exceeds groundwater standard.

Table 1
Analytical Results for Monitoring Well-D
Quartely O&M Sampling for
Supplyside Landfill Monitoring Wells

Monitoring Well	Sampling Round	Amonia	Chloride	PH	Sulfate	TDS	TOC	Phenolics	Iron	Lead	Manganese
MW-D	7/16/2003	<0.10	36	6.9	100	690	3.9	<0.0064	0.050	<0.0014	0.18
IEPA Groundwater Standards		N/A	200	6.5-8.5*	400	1,200	N/A	0.10	5	0.0075	0.15

Notes:
1. Concentrations are reported in milligrams per liter (mg/L).
2. Standards pertain to IEPA Class 1 Groundwater Quality Standards.
3. N/A - Not Applicable, IEPA or USEPA standards have not been established for these constituents.
4. * - Reported limit is fronm USEPA National Drinking Water Regulations since there is no IEPA standard.
5. Shaded = exceeded groundwater standard.

Table 5
Analytical Results for Monitoring Well-E
Quarterly O&M Sampling for
Supplyside Landfill Monitoring Wells

Monitoring Well	Sampling Round	Ammonia	Chloride	pH	Sulfate	TDS	TOC	Phenolics	Iron	Lead	Manganese
MW-E	Jul-99	0.14	20.4	7.38	45.9	530	5.5	<0.10	0.478	<0.001	0.328
	Oct-99	0.24	40.8	7.27	61.3	<10.0	24.0	0.31	0.909	<0.001	0.332
	Jan-00	<0.10	136	7.34	65.2	652	5.8	0.32	0.788	<0.001	<0.001
	Apr-00	53	35	7.26	130	450	4.0	0.042	0.71	<3.0	0.17
	Jul-00	0.40	2.63	7.5	19.5	240	13	<0.005	3.67	<5.00	1.66
	Oct-00	<0.0277	23.0	7.41	4.73	518	<6	<0.005	0.619	<0.004	<0.0001
	Jan-01	<0.0277	37.2	7.31	5.78	529	<3	<0.005	0.878	<5.00	0.169
	Apr-01	<0.0277	31.0	7.0	81.7	488	<6	0.0984	1.09	<0.004	0.270
	Jul-01	0.6	26.6	7.0	54.5	489	<3	<0.1	0.841	<0.003	0.194
	Oct-01	0.6	14.4	7.27	45.6	352	7	7.27	<0.116	<0.171	<0.042
	Jan-02	<0.4	23.8	6.98	50.3	469	<6	<0.005	1.54	<0.171	0.166
	Apr-02	1.5	30	7.0	290	470		<0.171	560	<1.0	180
	Jul-02	0.17	-	7.11	72	750	2.4	0.005	0.84	0.002	0.25
	Oct-02	1.2	31	7.04	120	550	2	0.0035	0.88	0.002	0.22
	Jan-03	1.51	35	7.22	300	544	2.4	<0.005	1.2	<0.002	0.298
	Apr-03	Not Yet Sampled									
IEPA Groundwater Standards		N/A	200	6.5-8.5*	400	1,200	N/A	0.10	5	0.0075	0.15

Notes:
1. Concentrations are reported in milligrams per liter (mg/L).
2. Standards pertain to IEPA Class 1 Groundwater Quality Standards.
3. N/A - Not Applicable, IEPA or USEPA standards have not been established for these constituents.
4. * - Reported limit is from USEPA National Secondary Drinking Water Regulations since there is no IEPA standard.
5. Shaded = exceeds groundwater standard.

Table 1
Analytical Results for Monitoring Well-E
Quartely O&M Sampling for
Supplyside Landfill Monitoring Wells

Monitoring Well	Sampling Round	Amonia	Chloride	PH	Sulfate	TDS	TOC	Phenolics	Iron	Lead	Manganese
MW-E	7/16/2003	<0.10	26	6.9	64	690	2.9	<0.0056	0.83	<0.0014	0.19
IEPA Groundwater Standards		N/A	200	6.5-8.5*	400	1,200	N/A	0.10	5	0.0075	0.15

Notes:
1. Concentrations are reported in milligrams per liter (mg/L).
2. Standards pertain to IEPA Class 1 Groundwater Quality Standards.
3. N/A - Not Applicable, IEPA or USEPA standards have not been established for these constituents.
4. * - Reported limit is fronm USEPA National Drinking Water Regulations since there is no IEPA standard.
5. Shaded = exceeded groundwater standard.

Table 6
Analytical Results for Monitoring Well-F
Quarterly O&M Sampling for
Supplyside Landfill Monitoring Wells

Monitoring Well	Sampling Round	Ammonia	Chloride	pH	Sulfate	TDS	TOC	Phenolics	Iron	Lead	Manganese
MW-F	Jul-99	1.93	18.7	7.13	129	750	22.6	<0.10	1.58	<0.001	1.5
	Oct-99	3.13	21.3	7.02	470	1,170	38.4	<0.10	2.68	<0.001	1.47
	Jan-00	2.13	32.8	7.42	688	1,540	21.2	0.29	0.271	<0.001	0.894
	Apr-00	77	10	7.13	290	1,100	11	0.078	0.11	<3.0	<0.10
	Jul-00	2.80	9.98	7.5	12.4	854	17	<0.005	0.663	<5.00	0.210
	Oct-00	<0.0277	24.8	7.21	15.2	1,063	<6	86.4	0.685	<0.004	0.372
	Jan-01	<0.0277	17.7	7.28	9.98	85.0	<3	<0.005	0.027	<5.00	<0.0001
	Apr-01	<0.0277	15.1	7.0	162	675	<6	0.171	0.101	<0.004	0.077
	Jul-01	2	60.2	6.78	142	735	10	<0.1	0.153	<0.003	0.722
	Oct-01	0.4	20.8	7.44	130	465	8	<0.1	<0.116	<0.171	<0.042
	Jan-02	1.8	34.7	6.88	249	880	<6	<0.005	2.15	<0.171	0.683
	Apr-02	1.9	36	6.9	310	860	5.9	0.011	200	<1.0	370
	Jul-02	1.6	-	7.01	250	840	7.0	0.005	1.0	0.002	1.0
	Oct-02	1.8	19	6.98	210	820	7.9	0.005	4.2	0.002	1.2
	Jan-03	2.43	20	7.05	330	996	6.14	<0.005	4.41	<0.002	1.57
	Apr-03	Not Yet Sampled									
IEPA Groundwater Standards		N/A	200	6.5-8.5*	400	1,200	N/A	0.10	5	0.0075	0.15

Notes:
1. Concentrations are reported in milligrams per liter (mg/L).
2. Standards pertain to IEPA Class 1 Groundwater Quality Standards.
3. N/A - Not Applicable, IEPA or USEPA standards have not been established for these constituents.
4. * - Reported limit is from USEPA National Secondary Drinking Water Regulations since there is no IEPA standard.
5. Shaded = exceeds groundwater standard.

Table 1
Analytical Results for Monitoring Well-F
Quartely O&M Sampling for
Supplyside Landfill Monitoring Wells

Monitoring Well	Sampling Round	Amonia	Chloride	PH	Sulfate	TDS	TOC	Phenolics	Iron	Lead	Manganese
MW-F	7/16/2003	0.40	10	7.0	180	760	6.4	<0.0056	0.48	<0.0014	0.38
IEPA Groundwater Standards		N/A	200	6.5-8.5*	400	1,200	N/A	0.10	5	0.0075	0.15

Notes:
1. Concentrations are reported in milligrams per liter (mg/L).
2. Standards pertain to IEPA Class 1 Groundwater Quality Standards.
3. N/A - Not Applicable, IEPA or USEPA standards have not been established for these constituents.
4. * - Reported limit is fronm USEPA National Drinking Water Regulations since there is no IEPA standard.
5. Shaded = exceeded groundwater standard.

GRAEF ANHALT SCHLOEMER and Associates Inc.

FIELD WATER QUALITY SAMPLING AND ANALYSIS LOG

PROJECT:	Great Lakes Landfill
PROJECT NO.:	20030185
LOCATION:	Great Lakes Naval Base
LABORATORY:	Test America
DATE SENT:	7/17/2003

INSTRUMENT IDENTIFICATION:

TEMPERATURE:	KIT #1
CONDUCTIVITY:	KIT #1
pH:	KIT #1
PUMP.	NA

SAMPLE LOCATION	MW-A	MW-B	MW-C	MW-D	MW-E
TYPE	Monitoring well	Monitoring well	Monitoring well	Monitoring well	Monitoring well
DATE/TIME	7/16/2003 0:00	7/16/2003 0:00	7/16/2003 0:00	7/16/2003 0:00	7/16/2003 0 00
WELL DEPTH (FT.)	14.70	17 00	17 20	17 90	17 70
DEPTH TO GW (FT.)	8 65	8 19	3.73	7.07	6 79
WATER COLUMN (FT.)	6.05	8.81	13.47	10 83	10 91
WELL VOLUME (GAL)	0.97	1.41	2.16	1 74	1.75
CALC. PURGE VOL. (GAL)	3 88	5 64	8 64	6.96	7.00
ACT. VOL. PURGED (GAL.)	4.50	6.00	9 00	7.25	7 25
MP ELEV. (FT. MSL)	676.92	676.11	680.19	675.38	674 92
GW ELEV. (FT. MSL)	668 27	667 92	676 46	668 31	668.13
SAMPLING DEVICE	Disposable Bailer	Disposable Bailer	Disposable Bailer	Disposable Bailer	Disposable Bailer
TEMPERATURE (°C)	15 5	16.7	17 0	16 7	17 3
CONDUCTIVITY (µS/cm)					
(mS/cm)	1 69	2 70	1 88	1.00	0 84
pH	6 69	6 75		7 72	7.78
DISSOLVED OXYGEN (ppm)	NA	NA	NA	NA	NA
REDOX (mV)	NA	NA	NA	NA	NA
COLOR					
ODOR					
CLARITY					
SAMPLING PARAMETERS :	NO. OF CONTAINERS & CONTAINER TYPE : VOA, PLASTIC, AMB. BTL. PRESERVATIVE TYPE , FILTERED OR UNFILTERED				
Ammonia	1 ltr plastic, H2So4, ice	1 ltr plastic, H2So4, ice	1 ltr plastic, H2So4, ice	1 ltr plastic, H2So4, ice	1 ltr plastic, H2So4, ice
Chloride/ Sulfate/ TDS/ PH	1 ltr plastic, no treat, ice	1 ltr plastic, no treat, ice	1 ltr plastic, no treat, ice	1 ltr plastic, no treat, ice	1 ltr plastic, no treat, ice
TOC	250 ml plastic,H2So4, ice	250 ml plastic,H2So4, ice	250 ml plastic,H2So4, ice	250 ml plastic,H2So4, ice	250 ml plastic,H2So4, ice
Iron / Manganese / Lead	250 ml plastic, HNO_3, field filtered, ice	250 ml plastic, HNO_3, field filtered, ice	250 ml plastic, HNO_3, field filtered, ice	250 ml plastic, HNO_3, field filtered, ice	250 ml plastic, HNO_3, field filtered, ice
Phenols	1 ltr amber, no treat, ice	1 ltr amber, no treat, ice	1 ltr amber, no treat, ice	1 ltr amber, no treat, ice	1 ltr amber, no treat, ice
SAMPLED BY:	WZ & GP	WZ & GP	WZ & GP	WZ & GP	WZ & GP
REMARKS :					

WSL 7 3A.XLS

GRAEF ANHALT SCHLOEMER and Associates Inc.

FIELD WATER QUALITY SAMPLING AND ANALYSIS LOG

PROJECT:	Great Lakes Landfill
PROJECT NO .	20030185
LOCATION:	Great Lakes Naval Base
LABORATORY:	Test America
DATE SENT:	7/17/2003

INSTRUMENT IDENTIFICATION:

TEMPERATURE:	KIT #1
CONDUCTIVITY:	KIT #1
pH:	KIT #1
PUMP:	NA

SAMPLE LOCATION	MW-F				
TYPE	Monitoring well				
DATE/TIME	7/13/2003 0:00				
WELL DEPTH (FT.)	17 10				
DEPTH TO GW (FT.)	6 44				
WATER COLUMN (FT.)	10 66				
WELL VOLUME (GAL)	1 71				
CALC. PURGE VOL. (GAL)	6 84				
ACT. VOL. PURGED (GAL.)	7 00				
MP ELEV. (FT. MSL)	681 74				
GW ELEV. (FT. MSL)	675.30	0 00	0.00	0 00	0 00
SAMPLING DEVICE	Disposable Bailer				
TEMPERATURE (°C)	16.0				
CONDUCTIVITY (µS/cm)					
(mS/cm)	1.037				
pH	6 55				
DISSOLVED OXYGEN (ppm)	NA				
REDOX (mV)	NA				
COLOR					
ODOR					
CLARITY					
SAMPLING PARAMETERS :	NO. OF CONTAINERS & CONTAINER TYPE : VOA, PLASTIC, AMB. BTL. PRESERVATIVE TYPE : FILTERED OR UNFILTERED				
Ammonia	1 ltr plastic, H2So4, ice				
Chloride/ Sulfate/ TDS/ PH	1 ltr plastic, no treat, ice				
TOC	250 ml plastic,H2So4, ice				
Iron / Manganese / Lead	250 ml plastic, HNO_3, field filtered, ice				
Phenols	1 ltr amber, no treat, ice				
SAMPLED BY:	WZ & GP				
REMARKS :					

WSL 7 3 B XLS

Well	A	B	C	D	E	F	Storet Number
Well Top	96.01	95.2	99.28	94.47	94.01	100.83	
Ground Surface	93.69	92.31	96.47	91.44	91.12	97.58	
Well Depth	14.7	17	17.2	17.9	17.7	17.1	
Depth to Water	**8.65**	**8.19**	**3.73**	**7.07**	**6.79**	**6.44**	**72109**
Depth to Water Below LS	**6.33**	**5.3**	**0.92**	**4.04**	**3.9**	**3.19**	**72019**
Well Elevation	676.92	676.11	680.19	675.38	674.92	681.74	
Ground Water Elevation	**668.27**	**667.92**	**676.46**	**668.31**	**668.13**	**675.3**	**71993**
Bottom Elevation	**662.22**	**659.11**	**662.99**	**657.48**	**657.22**	**664.64**	**72020**
Temperature (Degrees C)	**15.5**	**16.7**	**17.0**	**16.7**	**17.3**	**16.0**	**00011**
Conductivity (mS/cm)	**1.691**	**2.700**	**1.883**	**1.003**	**0.840**	**1.037**	**00094**
pH	**6.69**	**6.75**		**7.72**	**7.78**	**6.55**	**000400**
Ammonia							**00608**
Chloride							**00941**
Sulfate							**00946**
TDS							**70300**
TOC							**00680**
Phenolics							**32730**
Iron							**01046**
Lead							**01049**
Manganese							**01056**

TestAmerica
ANALYTICAL TESTING CORPORATION

WDNR No. 128053530
602 Commerce Drive • Watertown, WI 53094 • 920-261-1660 • 920-261-8120 Fax

ANALYTICAL REPORT

Mr. Ed Diesch
GRAEF, ANHALT, SCHLOEMER
& ASSOCIATES, INC.
125 S. 84th St. Suite 401
Milwaukee, WI 53214-1470

07/29/2003

Job No: 03.06543

The following samples were received by TestAmerica for analysis:

20030185 Great Lake Naval Base

Sample Number	Sample Description	Date Taken	Date Received
532795	MW-A	07/16/2003	07/17/2003
532796	MW-F	07/16/2003	07/17/2003
532797	MW-B	07/16/2003	07/17/2003
532798	MW-C	07/16/2003	07/17/2003
532799	MW-D	07/16/2003	07/17/2003
532800	MW-E	07/16/2003	07/17/2003

Karen R. Wenta
Inorganic Operations Manager

GRAEF, ANHALT, SCHLOEMER
Job No: 03.06543

07/29/2003

KEY TO DATA FLAGS

The attached sample(s) may have a result flag shown on the report. The following are the result flag definitions:

A = Analyzed/extracted past hold time
B = Blank is contaminated
C = Standard outside of control limits
D = Diluted for analysis
E = TCLP extraction outside of method required temperature range
F = Sample filtered in lab
G = Received past hold time
H = Late eluting hydrocarbons present
I = Improperly handled sample
J = Estimated concentration
L = Common lab solvent and contaminant
M = Matrix interference
P = Improperly preserved sample
Q = Result confirmed via re-analysis
S = Sediment present
T = Does not match typical pattern
W = BOD re-set due to missed dilution
X = Unidentified compound(s) present
Z = Internal standard outside limits
* = See Case Narrative

KEY TO ANALYST INITIALS

The attached sample(s) may have been analyzed by another certified laboratory. If a number appears in the Analyst Initials field, the following are the appropriate certifications (if the lab code does not appear below, that means that WDNR certification is not required for the work performed):

Lab Code	Certification Number
008	WDNR - 999766900
009	WDNR - 241293690
020	WDNR - 999447680
030	ILNELAC - 100230; WDNR - 998294430
060	ILNELAC - 100221; WDNR - 999447130
070	IA - 007; ILNELAC - 000668; MDH - 019-999-319; WDNR - 999917270
130	WDNR - 632021390
147	WDNR - 721026460
300	FLNELAC - 87358; IA - 131; MDH - 047-999-345; WDNR - 998020430
400	WDNR - 113133790
510	WDNR - 241249360
520	WDNR - 999518190; ILNELAC - 100439
700	WDNR - 113289110

TestAmerica Watertown WDNR - 128053530; IDNR - 294; MDH - 055-999-366; ND - R-046

For questions regarding this report, please contact Dan Milewsky or Warren Topel.

TestAmerica
ANALYTICAL TESTING CORPORATION

WDNR No. 128053530
602 Commerce Drive • Watertown, WI 53094 • 920-261-1660 • 920-261-8120 Fax

ANALYTICAL REPORT

Mr. Ed Diesch
GRAEF, ANHALT, SCHLOEMER
& ASSOCIATES, INC.
125 S. 84th St. Suite 401
Milwaukee, WI 53214-1470

07/29/2003
Job No: 03.06543
Account No: 32700
Purchase Order:

Job Description: 20030185 Great Lake Naval Base
Rec'd on ice

Parameter	Results	Units	MDL	LOQ	Method	Date Analyzed	Analyst	Prep/Run Batch
532795 MW-A			Date/Time Taken: 07/16/2003 UNKNOWN					
Chloride	17	mg/L	1.0	3.3	EPA 325.2	07/24/2003	gaf	2094
N-Ammonia	14	mg/L	0.10	0.33	SM 4500NHH	07/22/2003	tds	1390
pH, Lab	7.0	units	n/a	n/a	EPA 150.1	07/22/2003	kee	2574
Phenols, Colorimetric	<0.0056	mg/L	0.0056	0.020	EPA 420.2	07/24/2003	070	324
Solids, Total Dissolved	750	mg/L	1.0	3.3	EPA 160.1	07/18/2003	kee	1147
Sulfate, IC	150	mg/L	2.0	6.7	EPA 300.0	07/29/2003	tds	1563
Total Organic Carbon	16	mg/L	0.12	0.42	EPA 415.1	07/23/2003	070	536
Iron, AA	2.4	mg/L	0.042	0.14	EPA 236.1	07/24/2003	gaf	2717 2120
Lead, GFAA	<0.0014	mg/L	0.0014	0.0051	EPA 239.2	07/24/2003	gaf	1361 2400
Manganese, AA	0.49	mg/L	0.0018	0.0063	EPA 243.1	07/23/2003	gaf	2717 1366
532796 MW-F			Date/Time Taken: 07/16/2003 UNKNOWN					
Chloride	10	mg/L	1.0	3.3	EPA 325.2	07/24/2003	gaf	2094
N-Ammonia	0.40	mg/L	0.10	0.33	SM 4500NHH	07/22/2003	tds	1390
pH, Lab	7.0	units	n/a	n/a	EPA 150.1	07/22/2003	kee	2574
Phenols, Colorimetric	<0.0056	mg/L	0.0056	0.020	EPA 420.2	07/24/2003	070	324
Solids, Total Dissolved	760	mg/L	1.0	3.3	EPA 160.1	07/18/2003	kee	1147
Sulfate, IC	180	mg/L	2.0	6.7	EPA 300.0	07/25/2003	tds	1562
Total Organic Carbon	6.4	mg/L	0.12	0.42	EPA 415.1	07/23/2003	070	536
Iron, AA	0.48	mg/L	0.042	0.14	EPA 236.1	07/24/2003	gaf	2717 2120
Lead, GFAA	<0.0014	mg/L	0.0014	0.0051	EPA 239.2	07/24/2003	gaf	1361 2400
Manganese, AA	0.38	mg/L	0.0018	0.0063	EPA 243.1	07/23/2003	gaf	2717 1366
532797 MW-B			Date/Time Taken: 07/16/2003 UNKNOWN					
Chloride	290	mg/L	1.0	3.3	EPA 325.2	07/24/2003	gaf	2095
N-Ammonia	9.5	mg/L	0.10	0.33	SM 4500NHH	07/22/2003	tds	1390
pH, Lab	6.8	units	n/a	n/a	EPA 150.1	07/22/2003	kee	2574
Phenols, Colorimetric	<0.0056	mg/L	0.0056	0.020	EPA 420.2	07/24/2003	070	324
Solids, Total Dissolved	1,800	mg/L	1.0	3.3	EPA 160.1	07/18/2003	kee	1147
Sulfate, IC	140	mg/L	2.0	6.7	EPA 300.0	07/25/2003	tds	1562
Total Organic Carbon	7.2	mg/L	0.12	0.42	EPA 415.1	07/23/2003	070	536
Iron, AA	6.2	mg/L	0.042	0.14	EPA 236.1	07/24/2003	gaf	2717 2120
Lead, GFAA	0.0017	mg/L	0.0014	0.0051	EPA 239.2	07/24/2003	gaf	1361 2400

TestAmerica
ANALYTICAL TESTING CORPORATION
WDNR No. 128053530
602 Commerce Drive • Watertown, WI 53094 • 920-261-1660 • 920-261-8120 Fax

ANALYTICAL REPORT

Mr. Ed Diesch
GRAEF, ANHALT, SCHLOEMER
& ASSOCIATES, INC.
125 S. 84th St. Suite 401
Milwaukee, WI 53214-1470

07/29/2003
Job No: 03.06543
Account No: 32700
Purchase Order:

Job Description: 20030185 Great Lake Naval Base
Rec'd on ice

Parameter	Results	Units	MDL	LOQ	Method	Date Analyzed	Analyst	Prep/Run Batch
532797 MW-B			Date/Time Taken: 07/16/2003 UNKNOWN					
Manganese, AA	0.083	mg/L	0.0018	0.0063	EPA 243.1	07/23/2003	gaf	2717 1366
532798 MW-C			Date/Time Taken: 07/16/2003 UNKNOWN					
Chloride	74	mg/L	1.0	3.3	EPA 325.2	07/24/2003	gaf	2095
N-Ammonia	<0.10	mg/L	0.10	0.33	SM 4500NHH	07/22/2003	tds	1390
pH, Lab	6.8	units	n/a	n/a	EPA 150.1	07/22/2003	kee	2575
Phenols, Colorimetric	<0.0056	mg/L	0.0056	0.020	EPA 420.2	07/24/2003	070	324
Solids, Total Dissolved	1,300	mg/L	1.0	3.3	EPA 160.1	07/18/2003	kee	1147
Sulfate, IC	260	mg/L	2.0	6.7	EPA 300.0	07/25/2003	tds	1562
Total Organic Carbon	5.1	mg/L	0.12	0.42	EPA 415.1	07/23/2003	070	536
Iron, AA	0.065	mg/L	0.042	0.14	EPA 236.1	07/24/2003	gaf	2717 2120
Lead, GFAA	<0.0014	mg/L	0.0014	0.0051	EPA 239.2	07/24/2003	gaf	1361 2400
Manganese, AA	0.12	mg/L	0.0018	0.0063	EPA 243.1	07/23/2003	gaf	2717 1366
532799 MW-D			Date/Time Taken: 07/16/2003 UNKNOWN					
Chloride	36	mg/L	1.0	3.3	EPA 325.2	07/24/2003	gaf	2095
N-Ammonia	<0.10	mg/L	0.10	0.33	SM 4500NHH	07/22/2003	tds	1390
pH, Lab	6.9	units	n/a	n/a	EPA 150.1	07/22/2003	kee	2575
Phenols, Colorimetric	0.0064	mg/L	0.0056	0.020	EPA 420.2	07/24/2003	070	324
Solids, Total Dissolved	690	mg/L	1.0	3.3	EPA 160.1	07/18/2003	kee	1147
Sulfate, IC	100	mg/L	2.0	6.7	EPA 300.0	07/25/2003	tds	1560
Total Organic Carbon	3.9	mg/L	0.12	0.42	EPA 415.1	07/23/2003	070	536
Iron, AA	0.050	mg/L	0.042	0.14	EPA 236.1	07/24/2003	gaf	2717 2120
Lead, GFAA	<0.0014	mg/L	0.0014	0.0051	EPA 239.2	07/24/2003	gaf	1361 2400
Manganese, AA	0.18	mg/L	0.0018	0.0063	EPA 243.1	07/23/2003	gaf	2717 1366

TestAmerica
ANALYTICAL TESTING CORPORATION

WDNR No. 128053530
602 Commerce Drive • Watertown, WI 53094 • 920-261-1660 • 920-261-8120 Fax

ANALYTICAL REPORT

Mr. Ed Diesch
GRAEF, ANHALT, SCHLOEMER
& ASSOCIATES, INC.
125 S. 84th St. Suite 401
Milwaukee, WI 53214-1470

07/29/2003
Job No: 03.06543
Account No: 32700
Purchase Order:

Job Description: 20030185 Great Lake Naval Base
Rec'd on ice

Parameter	Results	Units	MDL	LOQ	Method	Date Analyzed	Analyst	Prep/Run Batch
532800 MW-E			Date/Time Taken: 07/16/2003 UNKNOWN					
Chloride	26	mg/L	1.0	3.3	EPA 325.2	07/24/2003	gaf	2095
N-Ammonia	<0.10	mg/L	0.10	0.33	SM 4500NHH	07/22/2003	tds	1391
pH, Lab	6.9	units	n/a	n/a	EPA 150.1	07/22/2003	kee	2575
Phenols, Colorimetric	<0.0056	mg/L	0.0056	0.020	EPA 420.2	07/24/2003	070	324
Solids, Total Dissolved	590	mg/L	1.0	3.3	EPA 160.1	07/18/2003	kee	1147
Sulfate, IC	64	mg/L	2.0	6.7	EPA 300.0	07/25/2003	tds	1560
Total Organic Carbon	2.9	mg/L	0.12	0.42	EPA 415.1	07/23/2003	070	536
Iron, AA	0.83	mg/L	0.042	0.14	EPA 236.1	07/24/2003	gaf	2717 2120
Lead, GFAA	<0.0014	mg/L	0.0014	0.0051	EPA 239.2	07/24/2003	gaf	1361 2400
Manganese, AA	0.19	mg/L	0.0018	0.0063	EPA 243.1	07/23/2003	gaf	2717 1366

TestAmerica
ANALYTICAL TESTING CORPORATION

WDNR No. 128053530
602 Commerce Drive • Watertown, WI 53094 • 920-261-1660 • 920-261-8120 Fax

QUALITY CONTROL REPORT
CONTINUING CALIBRATION VERIFICATION

07/29/2003

Mr. Ed Diesch
GRAEF, ANHALT, SCHLOEMER
& ASSOCIATES, INC.
125 S. 84th St. Suite 401
Milwaukee, WI 53214-1470

Job No: 03.06543
Account No: 32700

Job Description: 20030185 Great Lake Naval Base

Parameter	Run Batch	True Value	Observed Value	Percent Recovery	Control Limits
Chloride	2094	20.0	20.7	104	90 - 110
Chloride	2094	20.0	20.3	102	90 - 110
Chloride	2095	20.0	20.3	102	90 - 110
Chloride	2095	20.0	20.2	101	90 - 110
N-Ammonia	1390	10.0	9.7	97	90 - 110
N-Ammonia	1390	10.0	9.8	98	90 - 110
N-Ammonia	1391	10.0	9.8	98	90 - 110
N-Ammonia	1391	10.0	9.6	96	90 - 110
pH, Lab	2574	7.00	6.97	100	98.6 - 101
pH, Lab	2574	7.00	7.08	101	98.6 - 101
pH, Lab	2575	7.00	7.0	100	98.6 - 101
pH, Lab	2575	7.00	7.1	101	98.6 - 101
Phenols, Colorimetric	324	0.100	0.101	101	
Sulfate, IC	1560	40.0	39.6	99	90 - 110
Sulfate, IC	1560	40.0	39.1	98	90 - 110
Sulfate, IC	1562	40.0	38.0	95	90 - 110
Sulfate, IC	1562	40.0	37.3	93	90 - 110
Sulfate, IC	1563	40.0	37.5	94	90 - 110
Sulfate, IC	1563	40.0	37.5	94	90 - 110
Iron, AA	2120	0.500	0.502	100	90 - 110
Iron, AA	2120	0.500	0.509	102	90 - 110
Lead, GFAA	2400	0.0250	0.0258	103	90 - 110
Lead, GFAA	2400	0.0250	0.0260	104	90 - 110
Manganese, AA	1366	0.500	0.504	101	90 - 110
Manganese, AA	1366	0.500	0.510	102	90 - 110

TestAmerica
ANALYTICAL TESTING CORPORATION
WDNR No. 128053530
602 Commerce Drive • Watertown, WI 53094 • 920-261-1660 • 920-261-8120 Fax

QUALITY CONTROL REPORT
BLANKS

07/29/2003

Mr. Ed Diesch
GRAEF, ANHALT, SCHLOEMER
& ASSOCIATES, INC.
125 S. 84th St. Suite 401
Milwaukee, WI 53214-1470

Job No: 03.06543
Account No: 32700

Job Description: 20030185 Great Lake Naval Base

Parameter	Prep Batch	Run Batch	Blank Result	MDL	LOQ	Units
Chloride		2094	<1.0	1.0	3.3	mg/L
Chloride		2095	<1.0	1.0	3.3	mg/L
N-Ammonia		1390	<0.10	0.10	0.33	mg/L
N-Ammonia		1391	<0.10	0.10	0.33	mg/L
Phenols, Colorimetric		324	<0.0056	0.0056	0.020	mg/L
Sulfate, IC		1560	<2.0	2.0	6.7	mg/L
Sulfate, IC		1562	<2.0	2.0	6.7	mg/L
Sulfate, IC		1563	<2.0	2.0	6.7	mg/L
Iron, AA	2717	2118	<0.042	0.042	0.14	
Iron, AA		2120	<0.042	0.042	0.14	mg/L
Lead, GFAA	1361	2400	<0.0014	0.0014	0.0051	mg/L
Lead, GFAA		2400	<0.0014	0.0014	0.0051	mg/L
Manganese, AA	2717	1364	<0.0018	0.0018	0.0063	mg/L
Manganese, AA		1366	<0.0018	0.0018	0.0063	mg/L

Method blank results exceed control limits when results are higher than the highest of any of the following: 1 - The limit of detection; 2 - Five percent of the regulatory limit for that analyte; 3 - Five percent of the measured concentration in the sample. NR149.14 (3)d

TestAmerica
ANALYTICAL TESTING CORPORATION

WDNR No. 128053530
602 Commerce Drive • Watertown, WI 53094 • 920-261-1660 • 920-261-8120 Fax

QUALITY CONTROL REPORT
LABORATORY CONTROL STANDARD

07/29/2003

Mr. Ed Diesch
GRAEF, ANHALT, SCHLOEMER
& ASSOCIATES, INC.
125 S. 84th St. Suite 401
Milwaukee, WI 53214-1470

Job No: 03.06543
Account No: 32700

Job Description: 20030185 Great Lake Naval Base

Analyte	Prep Batch Number	Run Batch Number	LCS Amount	Units	LCS Result	LCSD Result	LCS Percent Recovery	LCSD Percent Recovery	Control Limits	Relative Percent Difference
N-Ammonia		1390	10.0	mg/L	10.1		101		90 - 110	
N-Ammonia		1391	10.0	mg/L	10.2		102		90 - 110	
Iron, AA	2717	2118	0.500		0.500		100		81 - 122	
Lead, GFAA	1361	2400	0.0200	mg/L	0.0204		102		89 - 123	
Manganese, AA	2717	1364	0.500	mg/L	0.502		100		91 - 111	

TestAmerica
ANALYTICAL TESTING CORPORATION

WDNR No. 128053530
602 Commerce Drive • Watertown, WI 53094 • 920-261-1660 • 920-261-8120 Fax

QUALITY CONTROL REPORT
MATRIX SPIKE/MATRIX SPIKE DUPLICATE

07/29/2003

Mr. Ed Diesch
GRAEF, ANHALT, SCHLOEMER
& ASSOCIATES, INC.
125 S. 84th St. Suite 401
Milwaukee, WI 53214-1470

Job No: 03.06543
Account No: 32700

Job Description: 20030185 Great Lake Naval Base

Analyte	Prep Batch Number	Run Batch Number	Sample Result	Spike Amount	Units	Matrix Spike Result	MSD Result	MS Percent Recovery	MSD Percent Recovery	Control Limits	Relative Percent Difference
Chloride		2094	14	100	mg/L	92	90	78	76	74 - 131	2.2
Chloride		2095	20	100	mg/L	104	100	84	80	74 - 131	3.9
N-Ammonia		1390	9.5	20.0	mg/L	30.2	30.5	104	105	76 - 113	1.0
N-Ammonia		1391	<0.10	20.0	mg/L	20.6	20.3	103	102	76 - 113	1.5
Sulfate, IC		1560	67	25.0	mg/L	92.0	91.4	100	98	68 - 129	0.7
Iron, AA	2717	2120	0.065	0.500	mg/L	0.580	0.574	103	102	63 - 136	1.0
Iron, AA		2120	<0.042	0.500	mg/L	0.518	0.520	104	104	63 - 136	0.4
Lead, GFAA	1361	2400	<0.0014	0.0200	mg/L	0.0220	0.0222	110	111	73 - 122	0.9
Manganese, AA	2717	1366	0.12	0.500	mg/L	0.626	0.628	101	102	79 - 114	0.3

TestAmerica
ANALYTICAL TESTING CORPORATION
WDNR No. 128053530
602 Commerce Drive • Watertown, WI 53094 • 920-261-1660 • 920-261-8120 Fax

QUALITY CONTROL REPORT
SPIKES

07/29/2003

Mr. Ed Diesch
GRAEF, ANHALT, SCHLOEMER
& ASSOCIATES, INC.
125 S. 84th St. Suite 401
Milwaukee, WI 53214-1470

Job No: 03.06543
Account No: 32700

Job Description: 20030185 Great Lake Naval Base

Analyte	Prep Batch Number	Run Batch Number	Sample Result	Spike Amount	Units	Spike Result	Percent Recovery	Control Limits
Lead, GFAA		2400	0.0063	0.0200	mg/L	0.0253	95	73 - 122
Lead, GFAA		2400	<0.0014	0.0200	mg/L	0.0203	102	73 - 122

TestAmerica
ANALYTICAL TESTING CORPORATION
WDNR No. 128053530
602 Commerce Drive • Watertown, WI 53094 • 920-261-1660 • 920-261-8120 Fax

QUALITY CONTROL REPORT
DUPLICATES

07/29/2003

Mr. Ed Diesch
GRAEF, ANHALT, SCHLOEMER
& ASSOCIATES, INC.
125 S. 84th St. Suite 401
Milwaukee, WI 53214-1470

Job No: 03.06543
Account No: 32700

Job Description: 20030185 Great Lake Naval Base

Parameter	Prep Batch Number	Run Batch Number	Sample Value	Duplicate Value	Units	RPD	Control Limit
Chloride		2094	10	9.7	mg/L	3.0	18
Chloride		2095	14	13.7	mg/L	2.2	18
N-Ammonia		1390	<0.10	<0.10	mg/L		12
N-Ammonia		1391	<0.10	<0.10	mg/L		12
pH, Lab		2574	7.5	7.5	units	0.0	
pH, Lab		2574	6.8	6.8	units	0.0	
pH, Lab		2575	9.1	9.3	units	2.2	
pH, Lab		2575	7.4	7.4	units	0.0	
Solids, Total Dissolved		1147	3,200	3,160	mg/L	1.3	10
Sulfate, IC		1560	13	14.6	mg/L	12	22
Sulfate, IC		1562	180	196	mg/L	8.5	22
Sulfate, IC		1563	150	146	mg/L	2.7	22
Iron, AA		2120	59	60.5	mg/L	2.5	26
Lead, GFAA	1361	2400	<0.0014	<0.0014	mg/L		10

03.06573

Project Number: 20030185

Laboratory: TEST AMERICA

Sample Collector(s): WMZ & CBP

Property Owner: US NAVY

Property Address: GREAT LAKES NAVAL BASE

Telephone Number (include area code):

CHAIN OF CUSTODY RECORD

GRAEF ANHALT SCHLOEMER and Associates Inc.
Engineers & Scientists
One Honey Creek Corporate Center
125 South 84th Street
Milwaukee, WI 53214-1470
Phone: (414) 259-1500
FAX: (414) 259-0037

I hereby certify that I received, properly handled, and disposed of these samples as noted below:

Relinquished By (Signature)	Date/Time/Temp.	Received By (Signature)
[signature]	7-17-03	[signature] 7/17 13:15
Relinquished By (Signature)	Date/Time/Temp.	Received By (Signature)
[signature]	7/17/03 15:27	
Relinquished By (Signature)	Date/Time/Temp.	Received for Laboratory By (Signature)
		[signature] 7/17/03 16:04

Sample Condition on Receipt by Laboratory
LABORATORY USE ONLY

Temperature of temperature blank: on ice

Page 1 of 4

If samples were received on ice and there was ice remaining, you may report the temperature as "received on ice." If all of the ice was melted, the temperature of the melt may be substituted for a temperature blank.

Field ID Number[1]	Date Collected	Time Collected	Sample Type[2]	Sample Device[3]	Preserv. Type	Field Screening	Description	Analysis Type	No./Type of Containers	Lab ID Number	Cracked /Broken	Improperly Sealed	Good Condition	Other Comments
MW-A	7-16-03		Groundwater	Disp. Bailer	H_2SO_4	/	1 liter plastic	Ammonia	1					
MW-A	"		"		None	/	1 liter plastic	Chloride, pH, TDS, Sulfate	1					
MW-A	"		"		H_2SO_4	/	250 ml plastic	TOC	1					
MW-A	"		"		HNO_3	/	250 ml plastic	Fe Mn Pb	1					
MW-A	"		"		H_2SO_4	/	1 liter amber glass	Phenols	1					
MW-F	"		"		H_2SO_4	/	1 liter plastic	Ammonia	1					
MW-F	"		"		H_2SO_4	/	250 ml plastic	TOC						
MW-F	"		"		H_2SO_4	/	1 liter amber	Phenol	1					
MW-F	"		"		HNO_3	/	1 liter	Fe Mn Pb	1					

[1]Sample description must clearly correlate the sample ID to the sampling location shown on a map.
[2]Specify groundwater, surface water, soil, leachate, sludge, etc.
[3]Type of sampling device; split spoon, hand auger, metal spatula, soil syringe, etc.

Remarks:

Report Results to:

DEPARTMENT USE/OPTIONAL FOR SOIL SAMPLERS

Disposition of unused portion of sample
Laboratory should:
☐ Dispose ☐ Retain for ____ days
☐ Return ☐ Other

DEPARTMENT USE ONLY

Split samples: Offered? ☐ Yes ☐ No (Check one)
Accepted? ☐ Yes ☐ No (Check one)

Accepted By: _____ Signature

7/18/03

White–Accompanies Shipment, Yellow–Laboratory Files, Pink–GAS

03.06543

CHAIN OF CUSTODY RECORD

GRAEF ANHALT SCHLOEMER and Associates Inc.
Engineers & Scientists
One Honey Creek Corporate Center
125 South 84th Street
Milwaukee, WI 53214-1470
Phone: (414) 259-1500
FAX: (414) 259-0037

Project Number: 20030185

Laboratory: TEST AMERICA

Sample Collector(s): WMZ & CBP

Property Owner: US NAVY

Property Address: GREAT LAKES NAVAL BASE

Telephone Number (include area code):

I hereby certify that I received, properly handled, and disposed of these samples as noted below:

Relinquished By (Signature)	Date/Time/Temp.	Received By (Signature)
	7/17 13:15	
Relinquished By (Signature)	Date/Time/Temp.	Received By (Signature)
	7/17 15:27	
Relinquished By (Signature)	Date/Time/Temp.	Received for Laboratory By (Signature)
	7/17/03 1604	

Sample Condition on Receipt by Laboratory
LABORATORY USE ONLY

Temperature of temperature blank: ONICE

Page 2 of 4

If samples were received on ice and there was ice remaining, you may report the temperature as "received on ice." If all of the ice was melted, the temperature of the melt may be substituted for a temperature blank.

Field ID Number[1]	Date Collected	Time Collected	Sample Type[2]	Sample Device[3]	Preserv. Type	Field Screening	Description	Analysis Type	No./Type of Containers	Lab ID Number	Cracked /Broken	Improperly Sealed	Good Condition	Other Comments
MW-F	7-16-03		GROUND WATER DISPOSAL		NONE	/	1 LITER PLASTIC	CHLORIDE pH SULFATE TDS	1					
MW-B	"		"		"	/	1 LITER PLASTIC	"	1					
MW-B	"		"		H_2SO_4	/	1 LITER AMBER GLASS	PHENOLS	1					
MW-B	"		"		"	/	250 ml PLASTIC	TOC	1					
MW-B	"		"		"	/	1 LITER PLASTIC	AMMONIA N	1					
MW-B	"		"		HNO_3	/	250 ml PLASTIC	Fe Mn Pb	1					
MW-C	"		"		"	/	"	"	1					
MW-C	"		"		H_2SO_4	/	1 LITER AMBER GLASS	PHENOLS	1					
MW-C	"		"		"	/	1 LITER PLASTIC	AMMONIA N	1					

[1]Sample description must clearly correlate the sample ID to the sampling location shown on a map.
[2]Specify groundwater, surface water, soil, leachate, sludge, etc.
[3]Type of sampling device; split spoon, hand auger, metal spatula, soil syringe, etc.

Remarks:

Report Results to:

DEPARTMENT USE ONLY

Split samples: Offered? ☐ Yes ☐ No (Check one)
Accepted? ☐ Yes ☐ No (Check one)

Accepted By: _____
Signature

DEPARTMENT USE/OPTIONAL FOR SOIL SAMPLERS

Disposition of unused portion of sample
Laboratory should:
☐ Dispose ☐ Retain for ____ days
☐ Return ☐ Other

7/18/03

White–Accompanies Shipment, Yellow–Laboratory Files, Pink–GAS

03.06543

Project Number 20030185

Laboratory TEST AMERICA

Sample Collector(s) GBP WMZ

CHAIN OF CUSTODY RECORD

GRAEF ANHALT SCHLOEMER and Associates Inc.
Engineers & Scientists
One Honey Creek Corporate Center
125 South 84th Street
Milwaukee, WI 53214-1470
Phone: (414) 259-1500
FAX: (414) 259-0037

Property Owner: US NAVY

Property Address: GREAT LAKES NAVAL BASE

Telephone Number (include area code):

I hereby certify that I received, properly handled, and disposed of these samples as noted below:

Relinquished By (Signature)	Date/Time/Temp.	Received By (Signature)
[signature]	7-17-03	[signature] 7/17 1315
Relinquished By (Signature)	Date/Time/Temp.	Received By (Signature)
[signature]	7/17 1527	
Relinquished By (Signature)	Date/Time/Temp.	Received for Laboratory By (Signature)
	7/17/03 1604	[signature]

Sample Condition on Receipt by Laboratory
LABORATORY USE ONLY

Temperature of temperature blank: ON ICE

Page 3 of 4

If samples were received on ice and there was ice remaining, you may report the temperature as "received on ice." If all of the ice was melted, the temperature of the melt may be substituted for a temperature blank.

Field ID Number[1]	Date Collected	Time Collected	Sample Type[2]	Sample Device[3]	Preserv. Type	Field Screening	Description	Analysis Type	No./Type of Containers	Lab ID Number	Cracked /Broken	Improperly Sealed	Good Condition	Other Comments
MW-C	7-16-03		GROUNDWATER	DIST. BAILER	H_2SO_4		250 ML PLASTIC	TOC	1					
MW-C	"		"		None		1 LITER PLASTIC	CHLORIDE pH SULFATE TDS	1					
MW-D	"		"		"		"	"	1					
MW-D	"		"		H_2SO_4		1 LITER GLASS AMBER	PHENOLS	1					
MW-D	"		"		"		1 LITER PLASTIC	AMMONIA N	1					
MW-D	"		"		"		250 ML PLASTIC	TOC	1					
MW-D	"		"		HNO_3		250 ML PLASTIC	Fe, Mn Pb	1					
MW-E	"		"		"		"	"	1					
MW-E	"		"		H_2SO_4		1 LITER AMBER GLASS	PHENOL	1					

[1]Sample description must clearly correlate the sample ID to the sampling location shown on a map.
[2]Specify groundwater, surface water, soil, leachate, sludge, etc.
[3]Type of sampling device; split spoon, hand auger, metal spatula, soil syringe, etc.

Remarks:

Report Results to:

DEPARTMENT USE ONLY

Split samples: Offered? ☐ Yes ☐ No (Check one)
Accepted? ☐ Yes ☐ No (Check one)

Accepted By: _____ Signature

7/18/03

DEPARTMENT USE/OPTIONAL FOR SOIL SAMPLERS

Disposition of unused portion of sample Laboratory should:
☐ Dispose ☐ Retain for ____ days
☐ Return ☐ Other

White–Accompanies Shipment, Yellow–Laboratory Files, Pink–GAS

02,06543

Project Number: 20630185

Laboratory: TEST AMERICA

Sample Collector(s): WMZ & GBP

CHAIN OF CUSTODY RECORD

GRAEF ANHALT SCHLOEMER and Associates Inc.
Engineers & Scientists
One Honey Creek Corporate Center
125 South 84th Street
Milwaukee, WI 53214-1470
Phone: (414) 259-1500
FAX: (414) 259-0037

Property Owner: US NAVY

Property Address: GREAT LAKES NAVAL BASE

Telephone Number (include area code):

I hereby certify that I received, properly handled, and disposed of these samples as noted below:

Relinquished By (Signature)	Date/Time/Temp.	Received By (Signature)
[signature]	7-17-03	[signature] 7/17 13:15
[signature]	7/17/03 1527	
	7/17/03 1604	[signature]

Relinquished By (Signature) / Received By (Signature) / Received for Laboratory By (Signature)

Sample Condition on Receipt by Laboratory
LABORATORY USE ONLY

Temperature of temperature blank: ON ICE

Page 4 of 4

If samples were received on ice and there was ice remaining, you may report the temperature as "received on ice." If all of the ice was melted, the temperature of the melt may be substituted for a temperature blank.

Field ID Number[1]	Date Collected	Time Collected	Sample Type[2]	Sample Device[3]	Preserv. Type	Field Screening	Description	Analysis Type	No./Type of Containers	Lab ID Number	Cracked /Broken	Improperly Sealed	Good Condition	Other Comments
MW-E	7-16-03		GROUNDWATER	DISP BAILER	H_2SO_4		1 LITER PLASTIC	AMMONIA N	1					
MW-E	"		"		"		250 ML PLASTIC	TOC	1					
MW-E	"		"		NONE		1 LITER PLASTIC	CHLORIDE pH SULFATE TDS	1					
MW-F	"		"		"		"	"	1				MW-F not	
MW-F	"		"		H_2SO_4		1 LITER AMBER GLASS	PHENOLS	1				recd on this	
MW-F	"		"		"		1 LITER PLASTIC	AMMONIA N	1				COC - already	
MW-F	"		"		"		250 ML PLASTIC	TOC	1				recorded on Pg 1	
MW-F	"		"		HNO_3		250 ML PLASTIC	Fe Mn Pb	1					
			"											

[1]Sample description must clearly correlate the sample ID to the sampling location shown on a map.
[2]Specify groundwater, surface water, soil, leachate, sludge, etc.
[3]Type of sampling device; split spoon, hand auger, metal spatula, soil syringe, etc.

Remarks:

Report Results to:

DEPARTMENT USE ONLY

Split samples: Offered? ☐ Yes ☐ No (Check one)
Accepted? ☐ Yes ☐ No (Check one)

Accepted By: _____
Signature

DEPARTMENT USE/OPTIONAL FOR SOIL SAMPLERS

Disposition of unused portion of sample Laboratory should:
☐ Dispose ☐ Retain for ____ days
☐ Return ☐ Other

White–Accompanies Shipment, Yellow–Laboratory Files, Pink–GAS

2-2/12/03

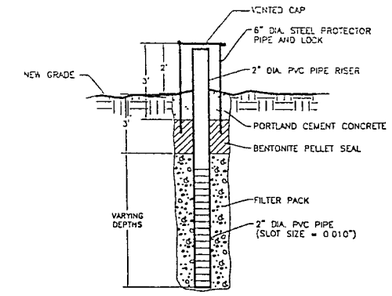

TYPICAL GROUND WATER MONITORING WELL CONSTRUCTION DETAIL

NOT TO SCALE

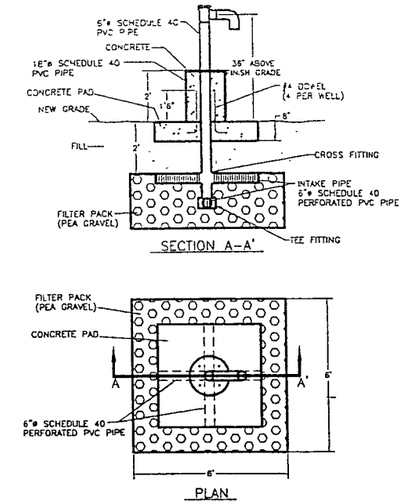

TYPICAL VENTILATION WELL CONSTRUCTION DETAIL

NOT TO SCALE

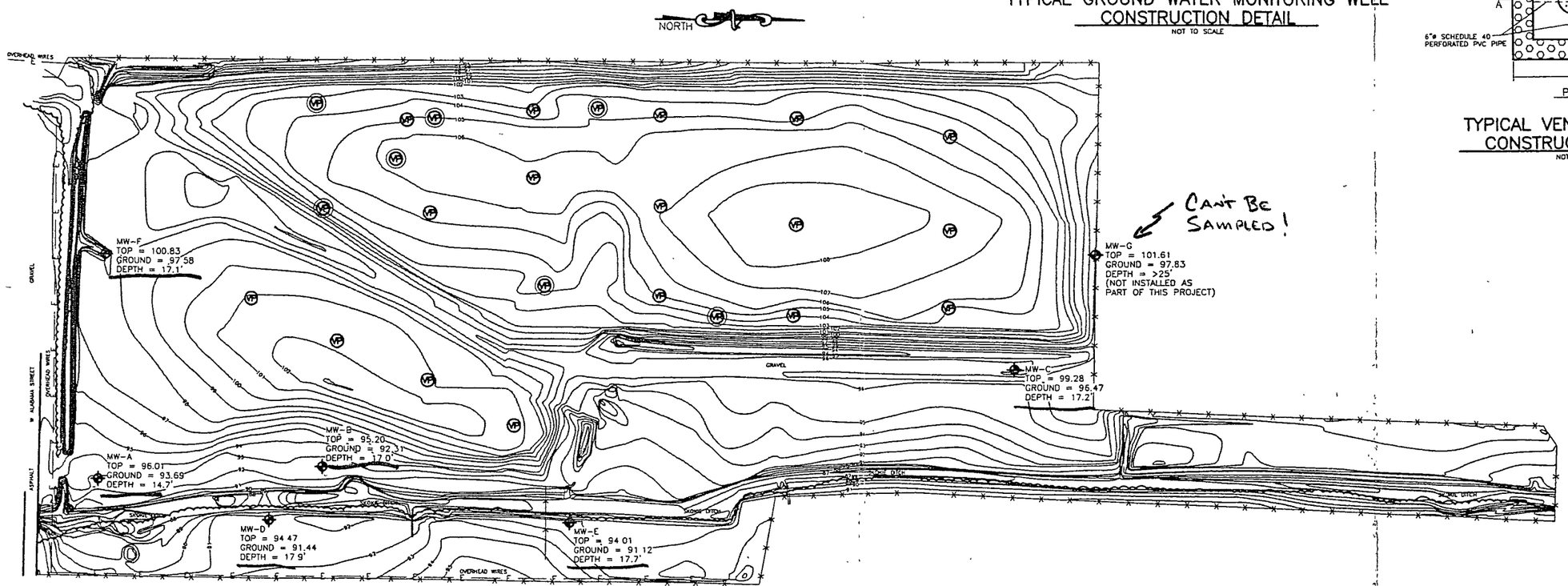

SITE SURVEY

VENT PIPE – NEW

VENT PIPE – REPAIRED

MONITORING WELL

TREE LINE

APPROXIMATE SCALE – FEET

0 50 100

REV	DATE	DESCRIPTION	BY	APPROVED

TOLTEST INC.

United States Navy

NAVAL TRAINING CENTER, GREAT LAKES, ILLINOIS

SUBMITTED BY: TOLTEST, INC.

DESIGNED BY: G VOGELSONG

DRAWN BY: M. CIESLEWSKI

CHECKED BY:

APPROVED BY:

ENGINEER

TITLE: MONITORING WELL LOCATIONS
SUPPLY SIDE LANDFILL
NAVAL TRAINING CENTER, GREAT LAKES, ILLINOIS

DATE: 26 JUN 02

SCALE: NONE

DELIVERY ORDER NO

TOLTEST, INC. PROJECT NO. 42782.01

DWG NO: 42782LW

SIZE: B

SHEET NO. 1 of 1

ADD
580.912 TO OBTAIN MSL